THIS DRAWING AND SPECIFICATIONS, HEREIN, ARE THE PROPERTY OF INVENTEC CORPORATION AND SHALL NOT BE REPODUCED, COPIED, OR USED IN WHOLE OR IN PART AS THE BASIS FOR THE MANUFACTURE OR SALE OF ITEMS WITHOUT WRITTEN PERMISSION, INVENTEC CORPORATION 2009 ALL RIGHT RESERVED

Zidane-UMA (PGA)

MV Build

2010/03/15

DATE	CHANGE NO.	REV

	EE	DATE	POWER	DATE
DRAWER	Chou Leo	10/01/05	Ho Wen-Pin	10/01/05
DESIGN	Wu Bruce	10/01/05		
CHECK	Wu Bruce	10/01/05		
RESPONSIBLE				

SIZE = 3 VER : A03

FILE NAME MERRAY-6050A2345401-MB-A03-8L

P/N 6050A2345401

INVENTEC

TITLE *MR133I-UMA*

Project Name

SIZE	CODE	DOC. NUMBER	REV
A3	CS	*1310A23512-0-MTR*	*A03*

SHEET 1 OF 48

Index

PAGE
01. PROJECT NAME
02. INDEX
03. Block Diagram
04. POWER Procedure
05. DC & CHARGE Circuit
06. Battery CONN
07. +V3A & +V5A
08. +V1.5 & +V0.75
09. +V1.8S & +V1.05S
10. +VCC_CORE
11. +VGFX_CORE
12. VTT & VPCIE & VDDC_GPU
13. +V5S & +V3S
14. CLK GEN
15. CPU-1
16. CPU-2
17. CPU-3
18. CPU-4
19. CPU-5
20. CPU-6
21. Thermal, Fan & XDP
22. DDR3-1
23. DDR3-2
24. PCH-1
25. PCH-2
26. PCH-3
27. PCH-4
28. PCH-5
29. PCH-6
30. PCH-7

PAGE
31. PCH-8
32. PCH-9
33. KBC
34. Keyboard & TouchPad
35. CRT CONN
36. LCM CONN
37. HDMI CONN
38. SATA HDD & ODD
39. LAN
40. RJ-45
41. Card Reader
42. Audio Codec
43. HP JACK & MIC JACK
44. ESATA, SCREW
45. WLAN & BlueTooth
46. USB, PowerButton(DB)
47. WWAN(Option)
48. FP & HD LOCK(Option)

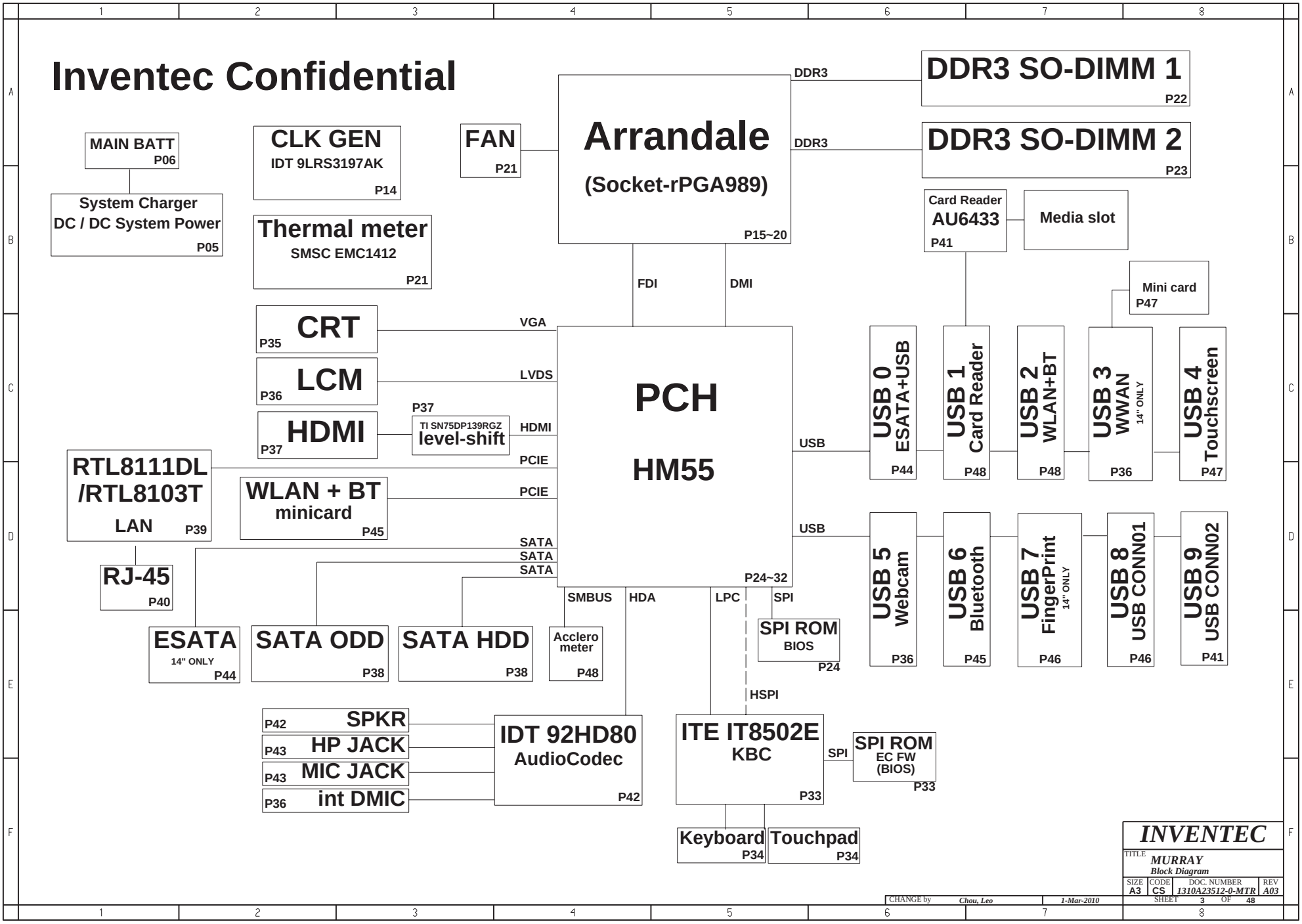
Inventec Confidential
Arrandale
(Socket-rPGA989)
P15~20
DDR3
DDR3
DDR3 SO-DIMM 1
P22
DDR3 SO-DIMM 2
P23
MAIN BATT
P06
System Charger
DC / DC System Power
P05
CLK GEN
IDT 9LRS3197AK
P14
FAN
P21
Thermal meter
SMSC EMC1412
P21
Card Reader
AU6433
P41
Media slot
Mini card
P47
FDI
DMI
CRT
P35
VGA
LCM
P36
LVDS
HDMI
P37
TI SN75DP139RGZ
level-shift
HDMI
P37
PCH
HM55
P24~32
USB
USB
USB 0
ESATA+USB
P44
USB 1
Card Reader
P48
USB 2
WLAN+BT
P48
USB 3
WWAN
14" ONLY
P36
USB 4
Touchscreen
P47
RTL8111DL
/RTL8103T
LAN
P39
PCIE
WLAN + BT
minicard
P45
PCIE
SATA
SATA
SATA
RJ-45
P40
ESATA
14" ONLY
P44
SATA ODD
P38
SATA HDD
P38
Acclero
meter
P48
SMBUS
HDA
LPC
SPI
SPI ROM
BIOS
P24
USB
USB 5
Webcam
P36
USB 6
Bluetooth
P45
USB 7
FingerPrint
14" ONLY
P46
USB 8
USB CONN01
P46
USB 9
USB CONN02
P41
HSPI
P42
SPKR
P43
HP JACK
P43
MIC JACK
P36
int DMIC
IDT 92HD80
AudioCodec
P42
ITE IT8502E
KBC
P33
SPI
SPI ROM
EC FW
(BIOS)
P33
Keyboard
P34
Touchpad
P34
INVENTEC
TITLE
MURRAY
Block Diagram
SIZE
A3
CODE
CS
DOC. NUMBER
1310A23512-0-MTR
REV
A03
SHEET
3
OF
48
CHANGE by
Chou, Leo
1-Mar-2010

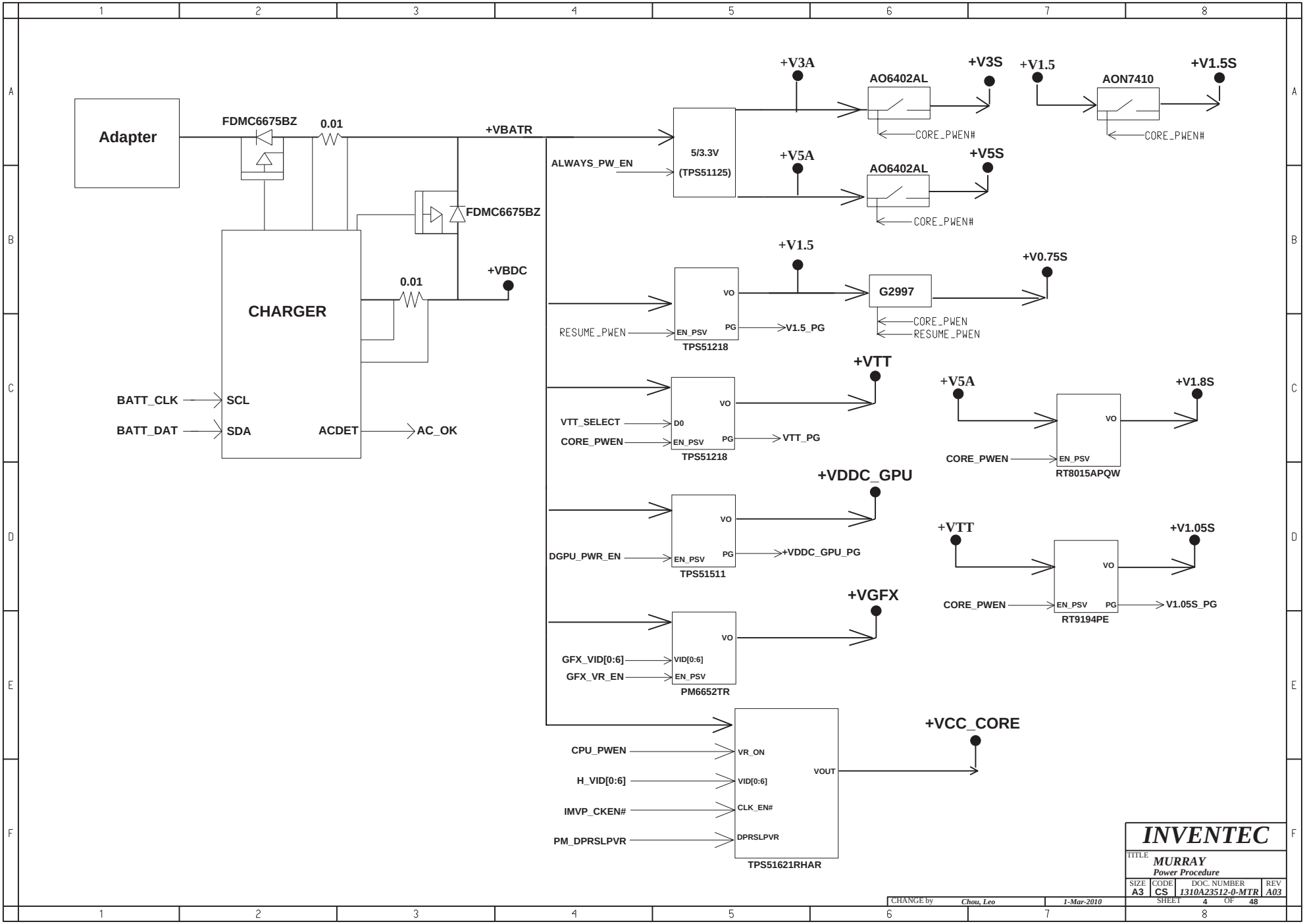

INVENTEC			
TITLE MURRAY Power Procedure			
SIZE A3	CODE CS	DOC. NUMBER 1310A23512-0-MTR	REV A03
CHANGE by Chou, Leo	1-Mar-2010	SHEET 4 OF 48	

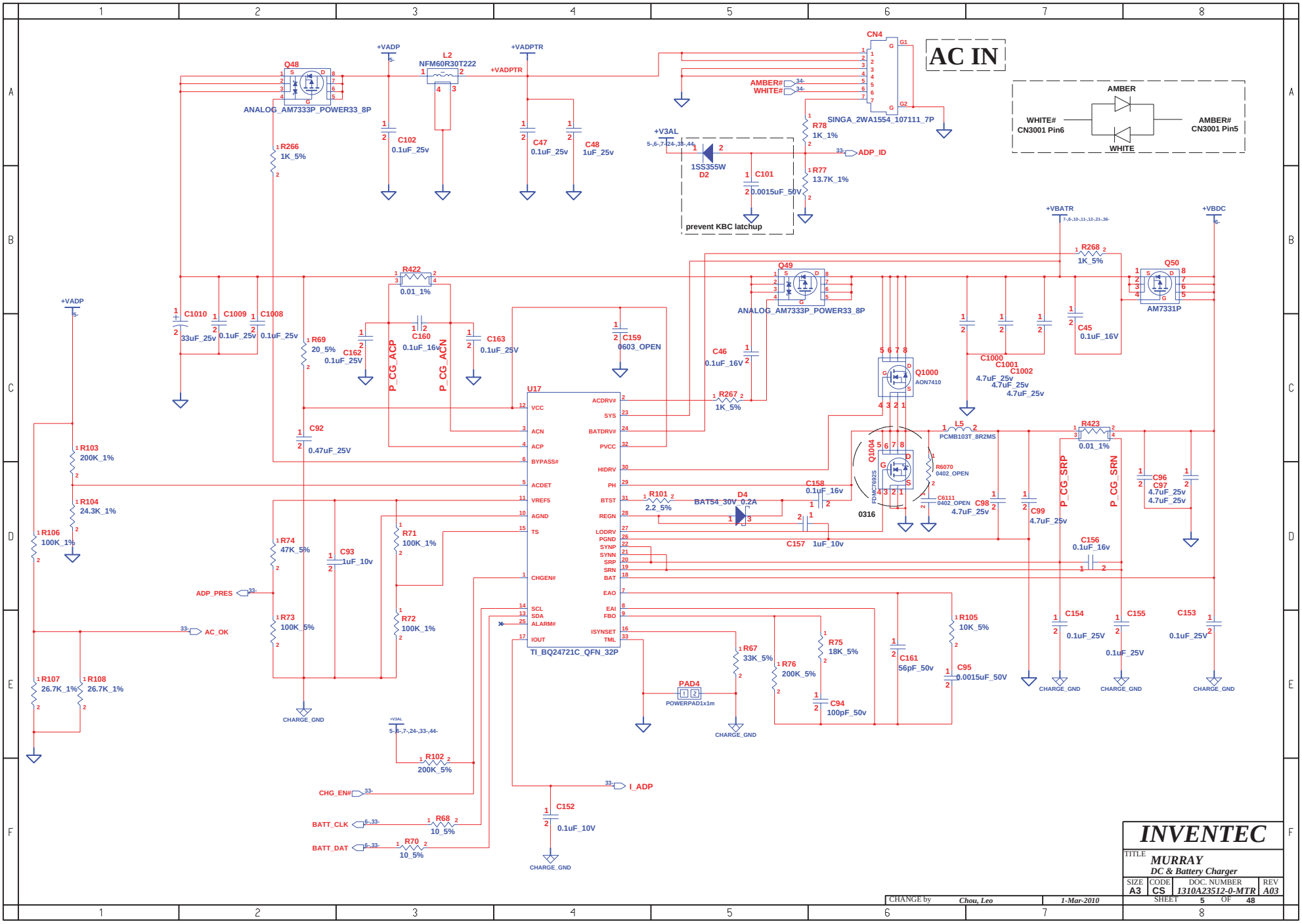
AC IN
CN4
SINGA_2WA1554_107111_7P
AMBER#
WHITE#
AMBER
WHITE
WHITE# CN3001 Pin6
AMBER# CN3001 Pin5
Q48
ANALOG_AM7333P_POWER33_8P
L2
NFM60R30T222
+VADP
+VADPTR
C102 0.1uF_25v
C47 0.1uF_25v
C48 1uF_25v
R266 1K_5%
+V3AL
1SS355W D2
R78 1K_1%
R77 13.7K_1%
C101 0.0015uF_50V
ADP_ID
prevent KBC latchup
+VBATR
+VBDC
R268 1K_5%
Q50
AM7331P
C45 0.1uF_16V
Q49
ANALOG_AM7333P_POWER33_8P
R422 0.01_1%
C1010 33uF_25v
C1009 0.1uF_25v
C1008 0.1uF_25v
R69 20_5%
C162 0.1uF_25V
C160 0.1uF_16v
C163 0.1uF_25V
P_CG_ACP
P_CG_ACN
C159 0603_OPEN
C46 0.1uF_16V
R267 1K_5%
Q1000 AON7410
C1000
C1001 4.7uF_25v
C1002 4.7uF_25v
4.7uF_25v
U17
TI_BQ24721C_QFN_32P
VCC
ACN
ACP
BYPASS#
ACDET
VREF5
AGND
TS
CHGEN#
SCL
SDA
ALARM#
IOUT
ACDRV#
SYS
BATDRV#
PVCC
HIDRV
PH
BTST
REGN
LODRV
PGND
SYNP
SYNN
SRP
SRN
BAT
EAO
EAI
FBO
ISYNSET
TML
C92 0.47uF_25V
R103 200K_1%
R104 24.3K_1%
R106 100K_1%
R74 47K_5%
C93 1uF_10v
R71 100K_1%
R72 100K_1%
R73 100K_5%
ADP_PRES
AC_OK
R107 26.7K_1%
R108 26.7K_1%
CHARGE_GND
R102 200K_5%
CHG_EN#
BATT_CLK
BATT_DAT
R68 10_5%
R70 10_5%
C152 0.1uF_10V
I_ADP
R101 2.2_5%
D4 BAT54_30V_0.2A
C158 0.1uF_16v
C157 1uF_10v
Q1004 FDMC7692S
0316
L5 PCMB103T_8R2MS
R6070 0402_OPEN
C6111 0402_OPEN
C98 4.7uF_25v
C99 4.7uF_25v
R423 0.01_1%
P_CG_SRP
P_CG_SRN
C96
C97 4.7uF_25v
4.7uF_25v
C156 0.1uF_16v
C154 0.1uF_25V
C155 0.1uF_25V
C153 0.1uF_25V
PAD4 POWERPAD1x1m
R67 33K_5%
R76 200K_5%
R75 18K_5%
C94 100pF_50v
C161 56pF_50v
R105 10K_5%
C95 0.0015uF_50V
INVENTEC
TITLE
MURRAY
DC & Battery Charger
SIZE A3
CODE CS
DOC. NUMBER 1310A23512-0-MTR
REV A03
SHEET 5 OF 48
CHANGE by Chou, Leo
1-Mar-2010

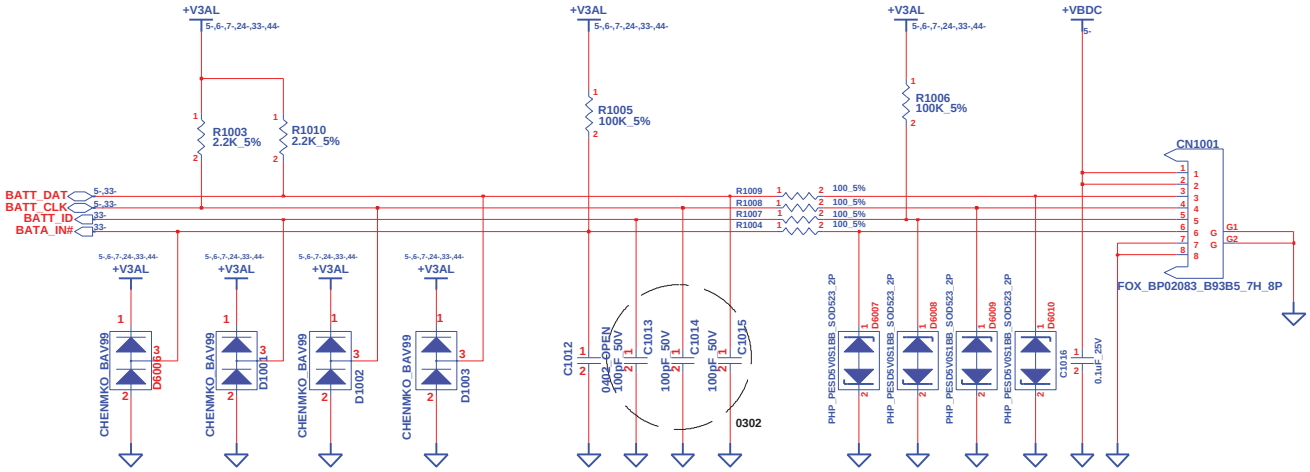

CHANGE by	Chou, Leo	1-Mar-2010	

INVENTEC

TITLE
MURRAY
Battery CONN

SIZE	CODE	DOC. NUMBER	REV
A3	CS	1310A23512-0-MTR	A03

SHEET 6 OF 48

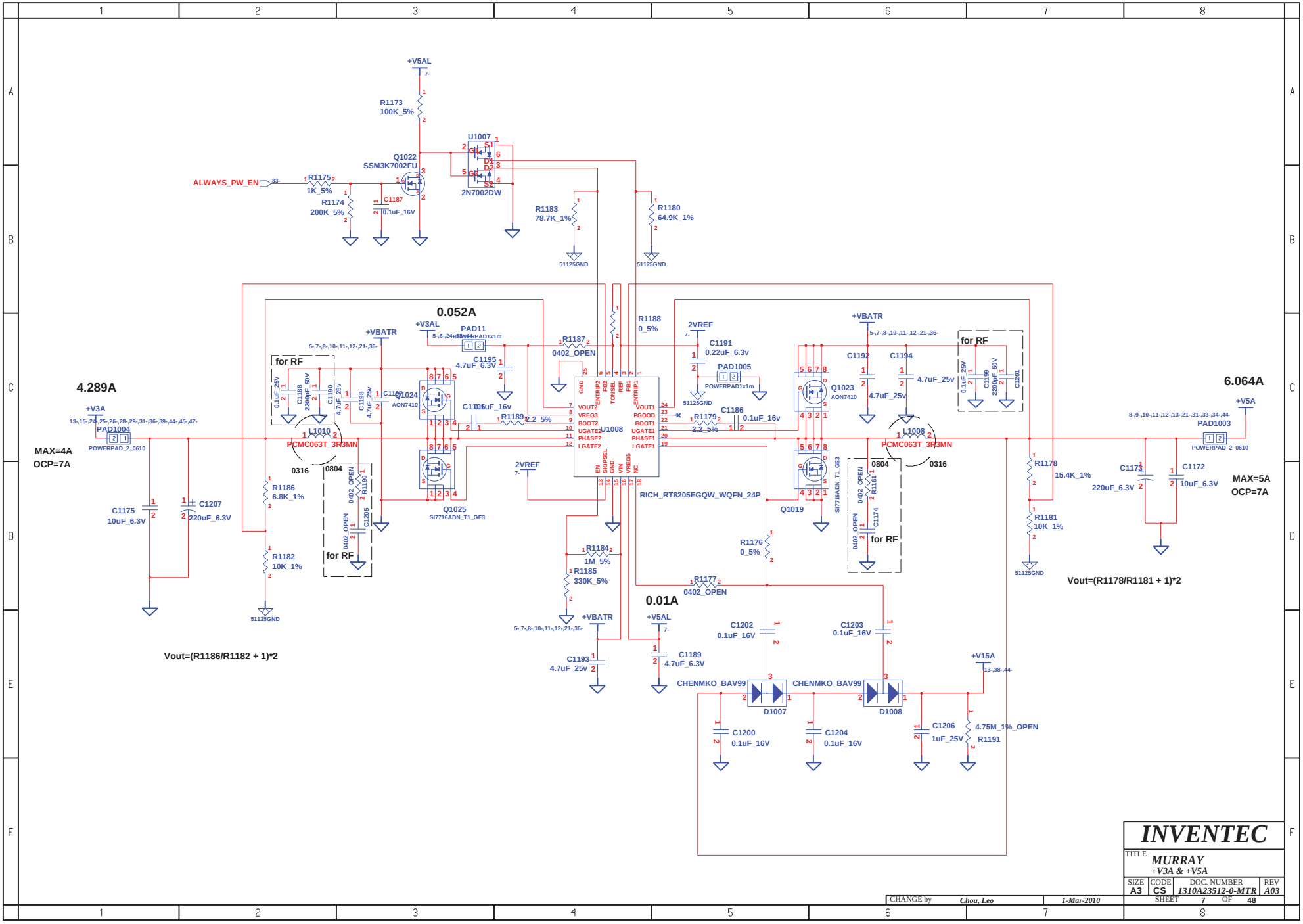

INVENTEC			
TITLE MURRAY +V3A & +V5A			
SIZE A3	CODE CS	DOC. NUMBER 1310A23512-0-MTR	REV A03
CHANGE by Chou, Leo	1-Mar-2010	SHEET 7 OF 48	

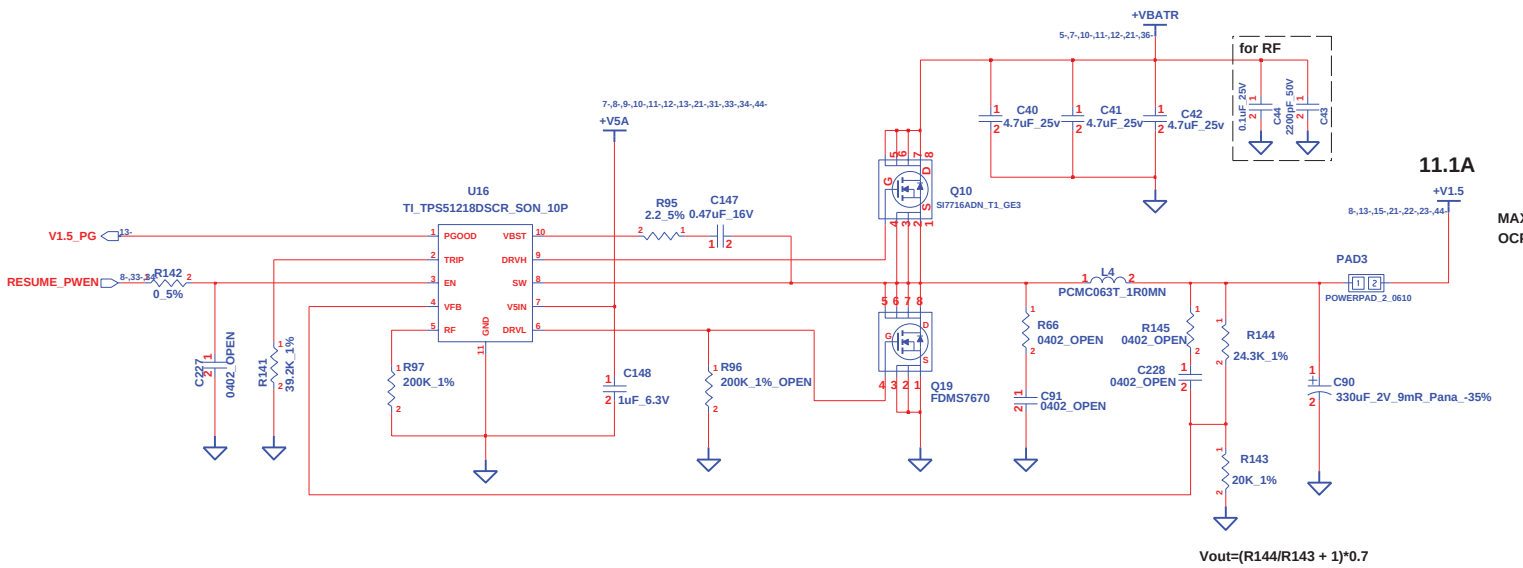

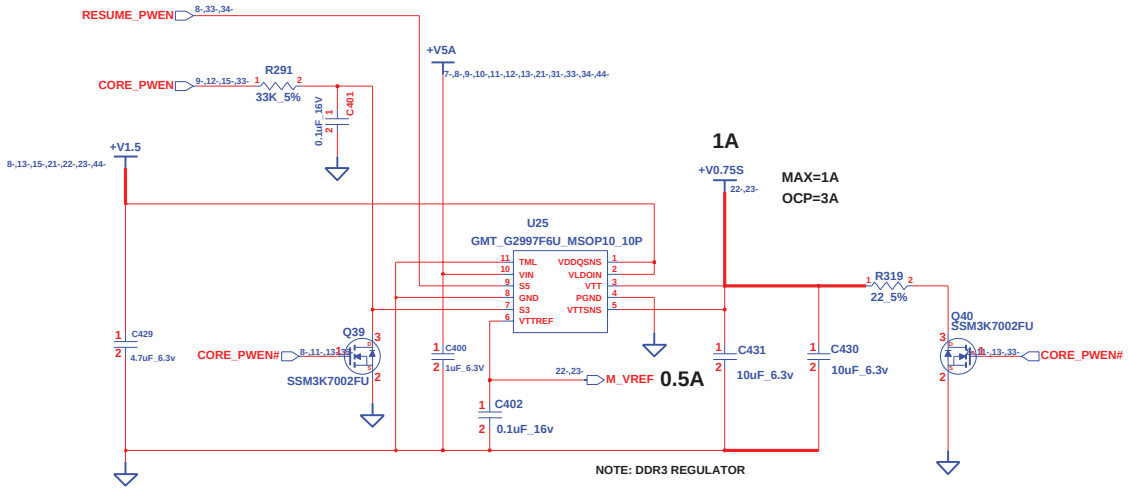

INVENTEC			
TITLE MURRAY +V1.5 & +V0.75			
SIZE A3	CODE CS	DOC. NUMBER 1310A23512-0-MTR	REV A03
CHANGE by Chou, Leo	1-Mar-2010	SHEET 8 OF 48	

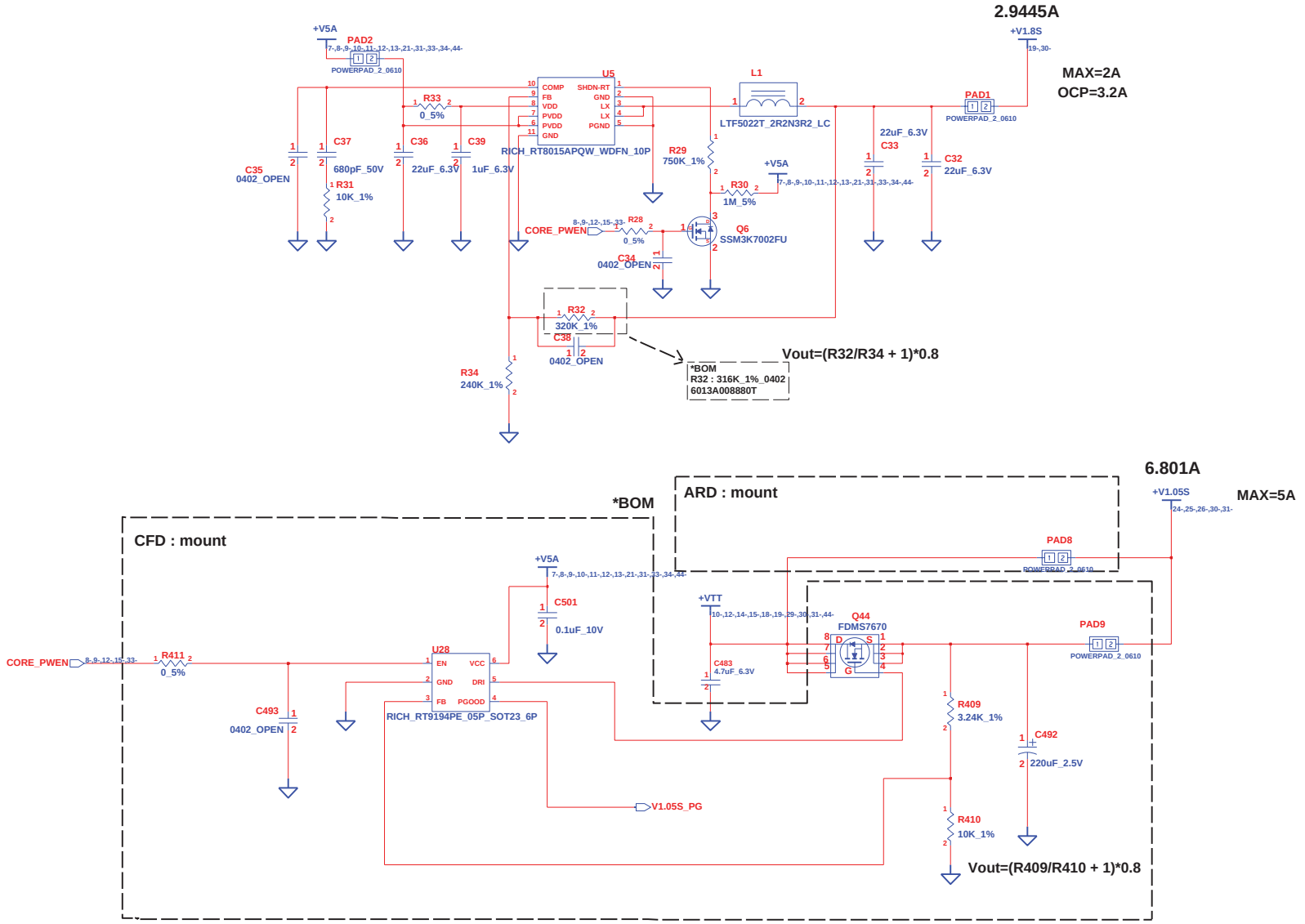

INVENTEC

TITLE MURRAY
+V1.8S & +V1.05S

SIZE	CODE	DOC. NUMBER	REV
A3	CS	1310A23512-0-MTR	A03

CHANGE by Chou, Leo 1-Mar-2010

SHEET 9 OF 48

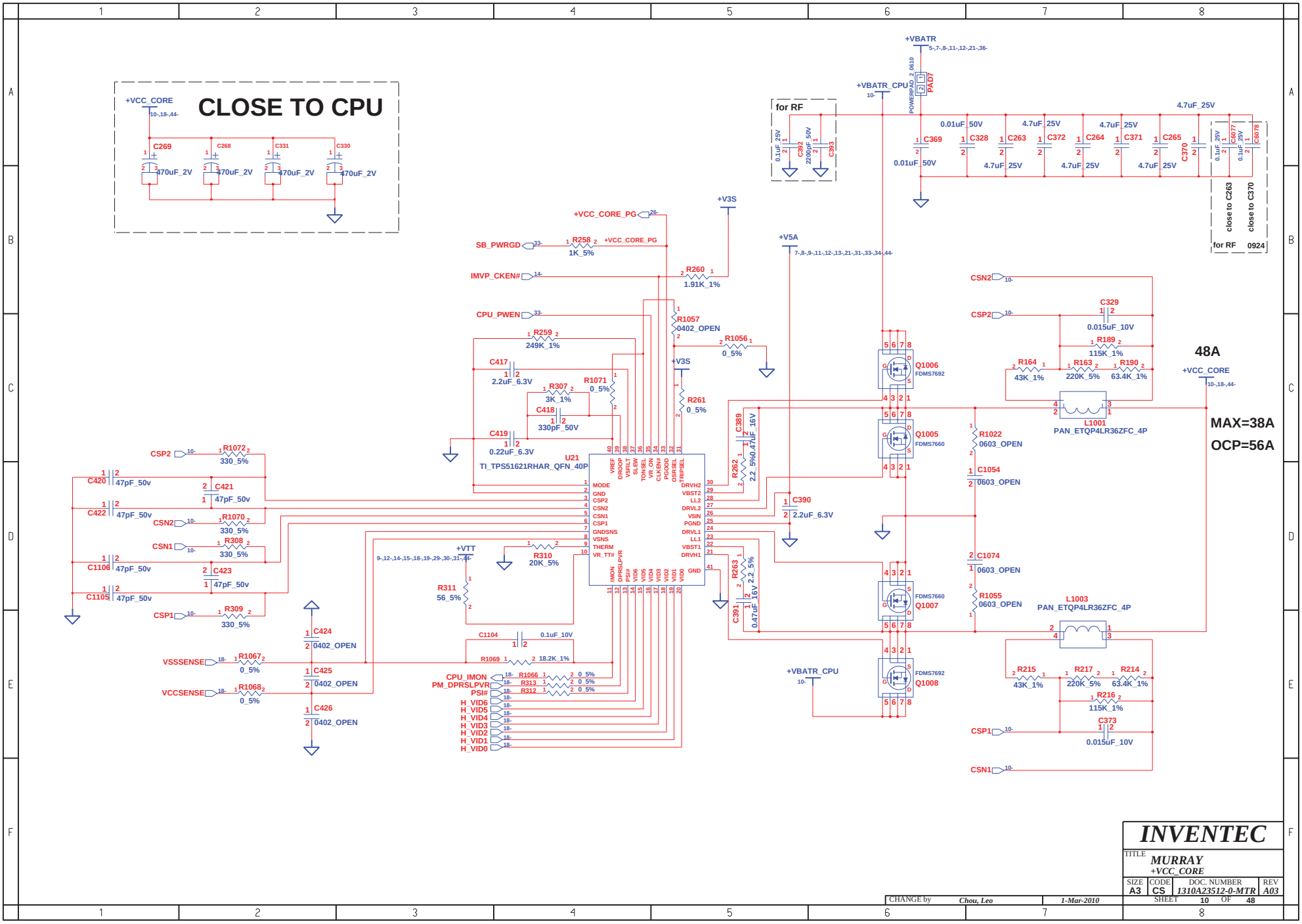
CLOSE TO CPU
+VCC_CORE
C269
C268
C331
C330
470uF_2V
+VBATR
+VBATR_CPU
PAD7
for RF
C369
C328
C263
C372
C264
C371
C265
C370
C6077
C6078
0.01uF_50V
4.7uF_25V
close to C263
close to C370
+V3S
+V5A
+VCC_CORE_PG
SB_PWRGD
R258
1K_5%
IMVP_CKEN#
R260
1.91K_1%
CPU_PWEN
R1057
0402_OPEN
R1056
0_5%
R259
249K_1%
C417
2.2uF_6.3V
R307
3K_1%
R1071
0_5%
C418
330pF_50V
C419
0.22uF_6.3V
R261
0_5%
U21
TI_TPS51621RHAR_QFN_40P
CSP2
CSN2
CSN1
CSP1
R1072
330_5%
R1070
330_5%
R308
330_5%
R309
330_5%
C420
C422
C1106
C1105
47pF_50v
C421
C423
+VTT
R310
20K_5%
R311
56_5%
C1104
0.1uF_10V
R1069
18.2K_1%
C424
C425
C426
0402_OPEN
VSSSENSE
VCCSENSE
R1067
R1068
0_5%
CPU_IMON
PM_DPRSLPVR
PSI#
H_VID6
H_VID5
H_VID4
H_VID3
H_VID2
H_VID1
H_VID0
R1066
R313
R312
C389
0.47uF_16V
R262
2.2_5%
C390
2.2uF_6.3V
R263
2.2_5%
C391
0.47uF_16V
Q1006
Q1005
Q1007
Q1008
FDMS7692
FDMS7660
R1022
0603_OPEN
C1054
C1074
R1055
L1001
L1003
PAN_ETQP4LR36ZFC_4P
C329
0.015uF_10V
R189
115K_1%
R164
43K_1%
R163
220K_5%
R190
63.4K_1%
R215
R217
R214
R216
C373
48A
MAX=38A
OCP=56A
INVENTEC
TITLE
MURRAY
+VCC_CORE
SIZE A3
CODE CS
DOC. NUMBER 1310A23512-0-MTR
REV A03
SHEET 10 OF 48
CHANGE by Chou, Leo
1-Mar-2010

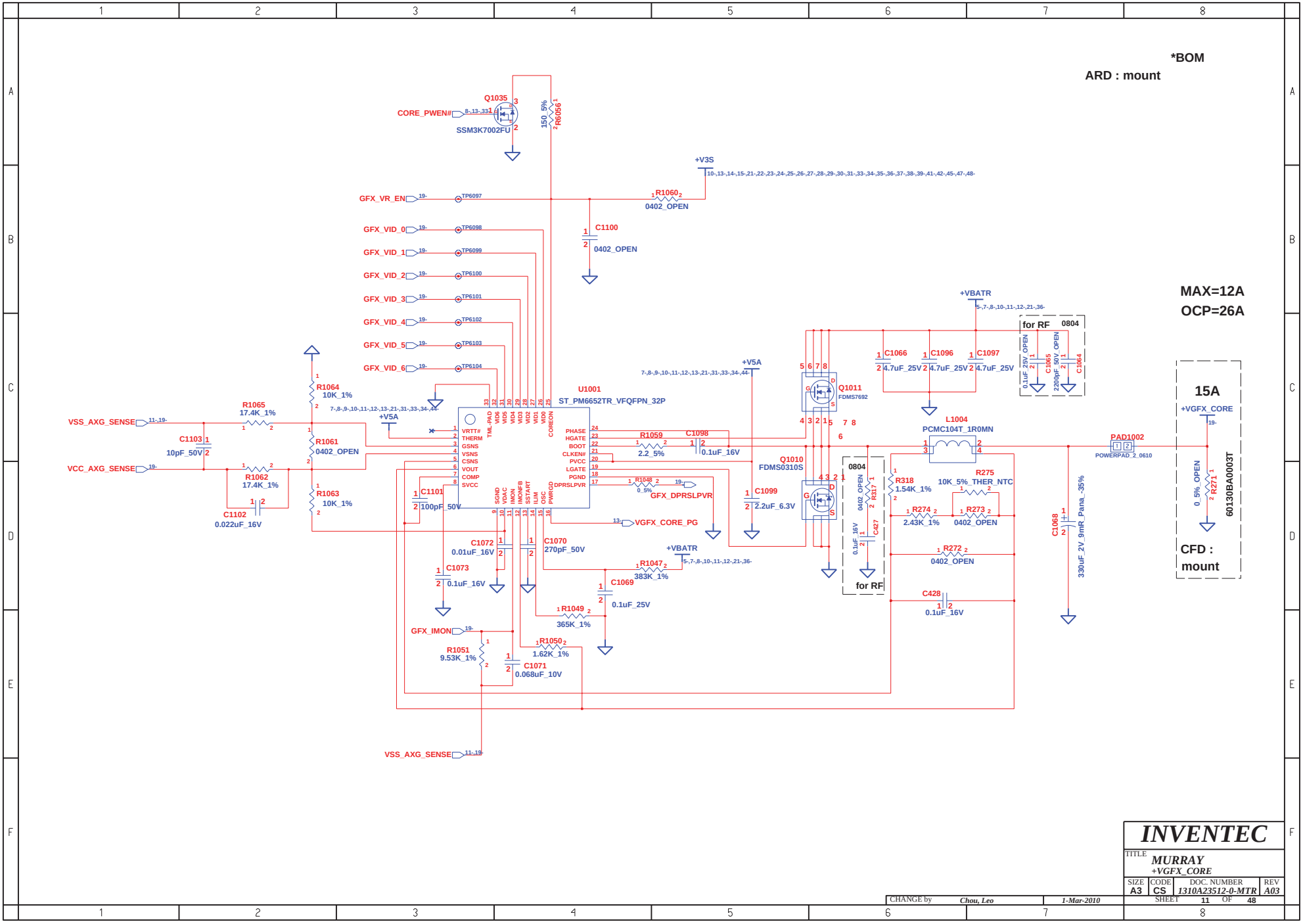

CHANGE by	Chou, Leo	1-Mar-2010	

INVENTEC

TITLE: MURRAY +VGFX_CORE

SIZE	CODE	DOC. NUMBER	REV
A3	CS	1310A23512-0-MTR	A03

SHEET 11 OF 48

Vout=(Rtop/Rbot + 1)*0.75

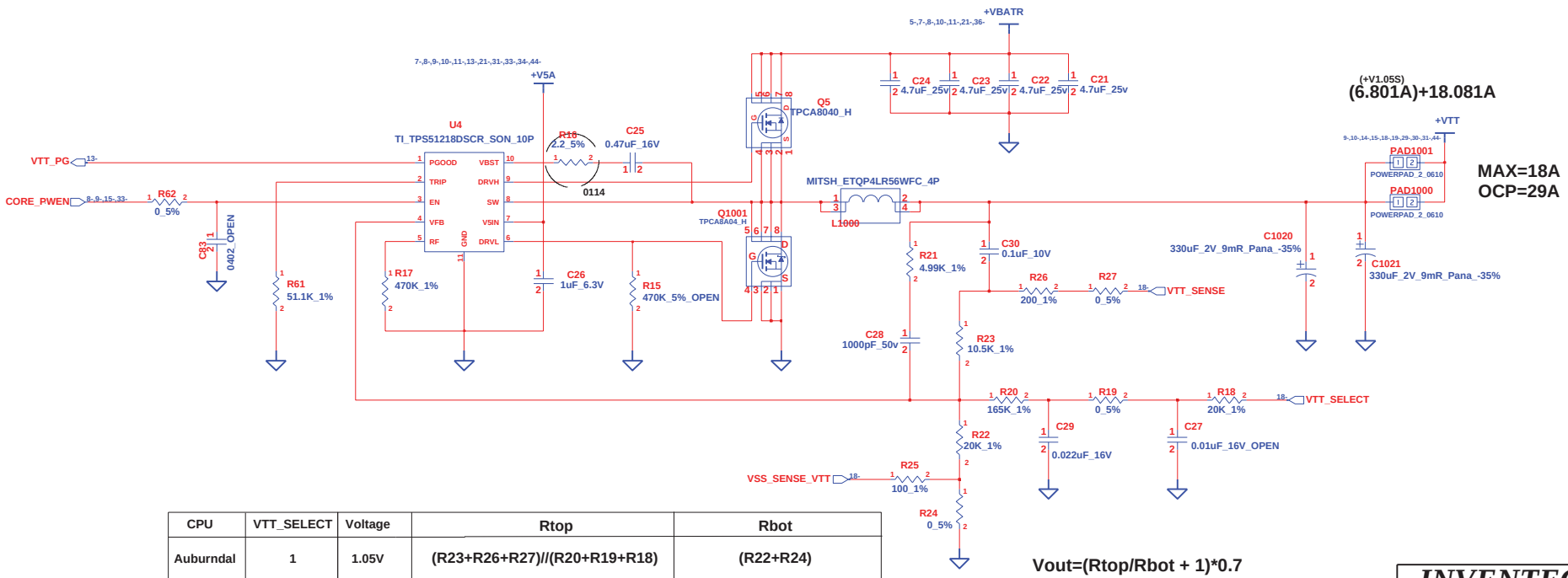

MAX=18A
OCP=29A

Vout=(Rtop/Rbot + 1)*0.7

CPU	VTT_SELECT	Voltage	Rtop	Rbot
Auburndal	1	1.05V	(R23+R26+R27)//(R20+R19+R18)	(R22+R24)
Clarksfield	0	1.1V	(R23+R26+R27)	(R22+R24)//(R20+R19+R18)

INVENTEC

TITLE MURRAY
Reserve Page

SIZE	CODE	DOC. NUMBER	REV
A3	CS	1310A23512-0-MTR	A03

SHEET 12 OF 48

CHANGE by Chou, Leo 1-Mar-2010

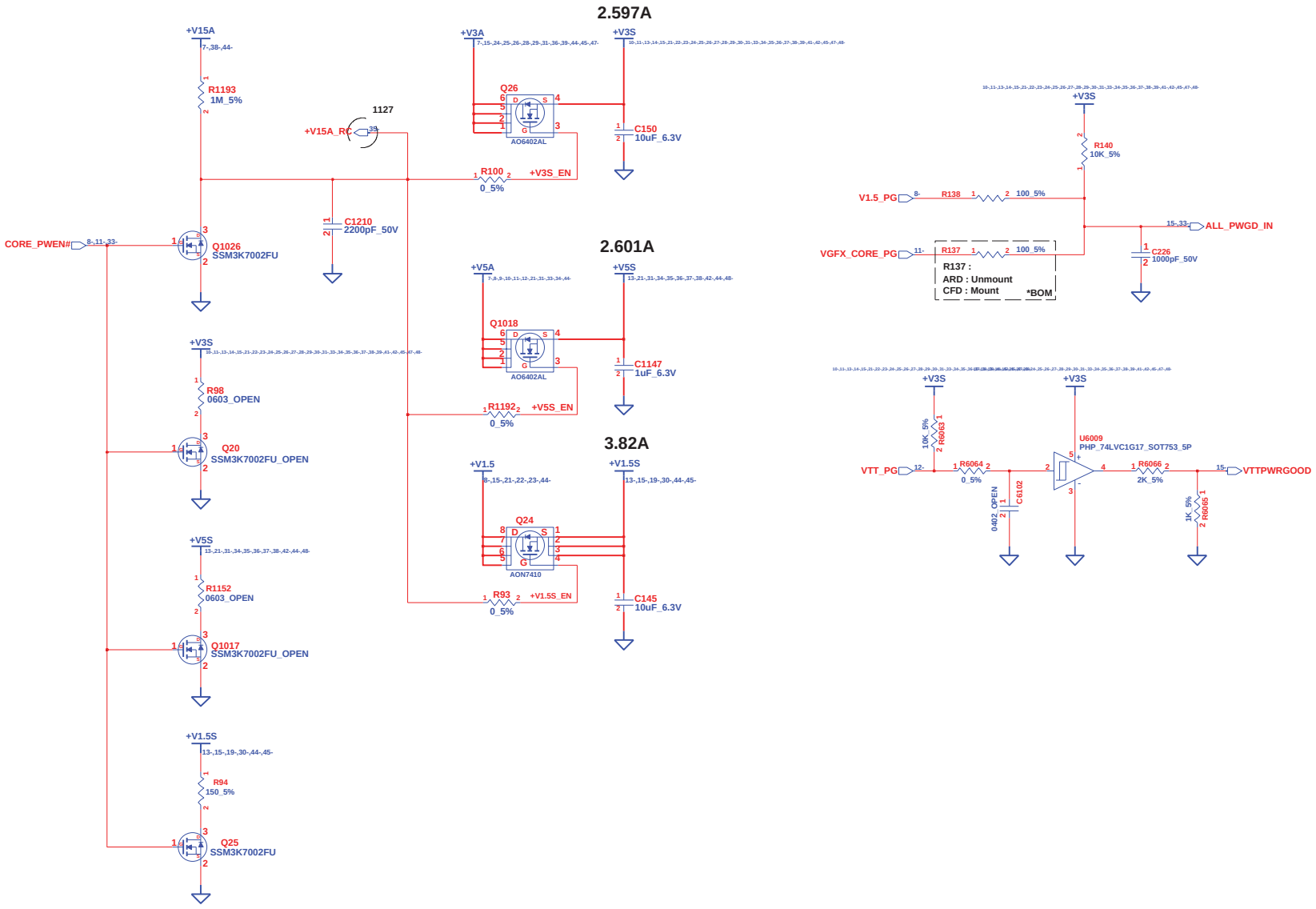

INVENTEC

TITLE
MURRAY
+V5S & +V3S

SIZE	CODE	DOC. NUMBER	REV
A3	CS	1310A23512-0-MTR	A03

CHANGE by Chou, Leo 1-Mar-2010

SHEET 13 OF 48

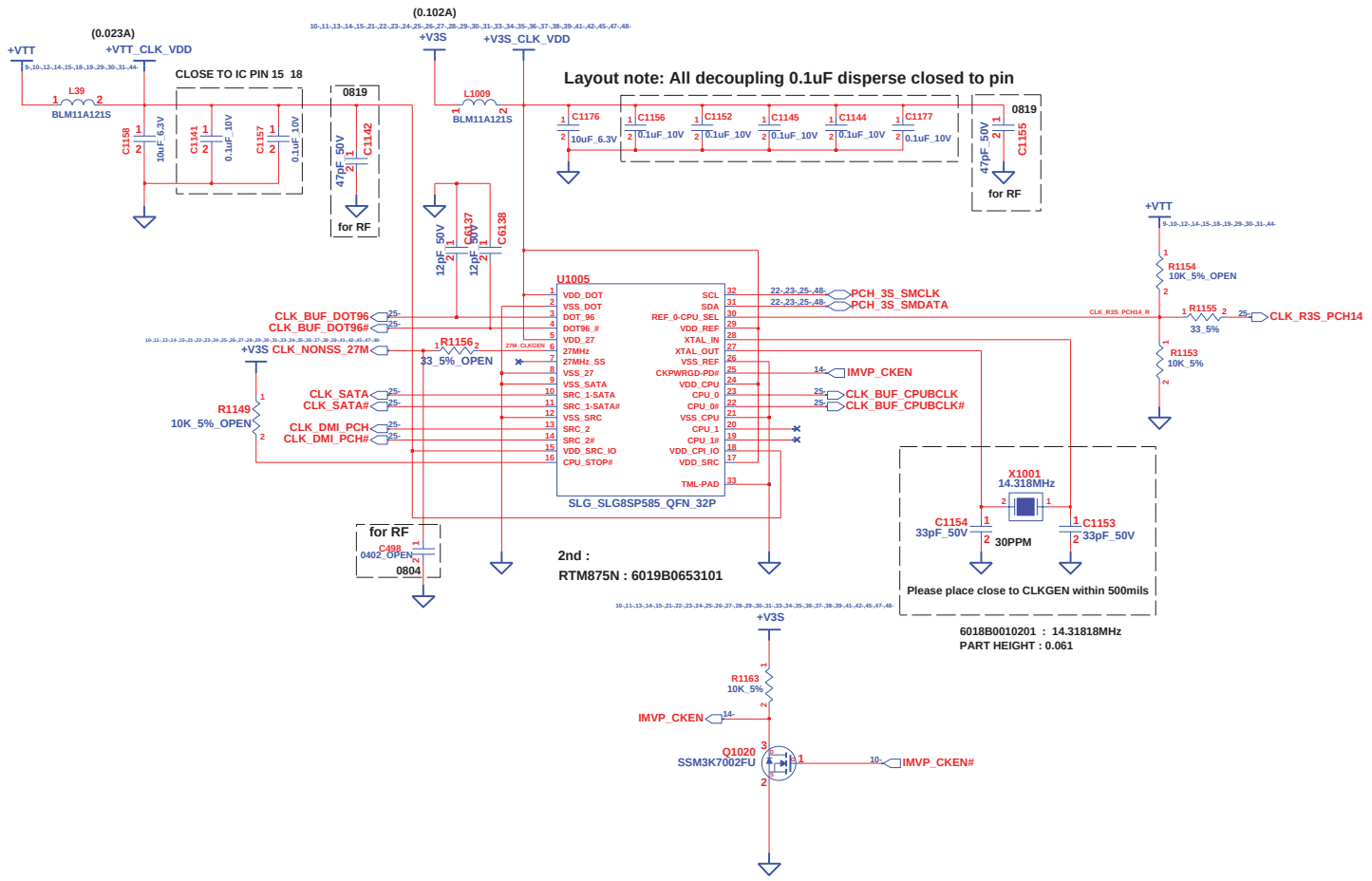

INVENTEC			
TITLE MURRAY CLK GEN			
SIZE A3	CODE CS	DOC. NUMBER 1310A23512-0-MTR	REV A03
CHANGE by Chou, Leo	1-Mar-2010	SHEET 14 OF 48	

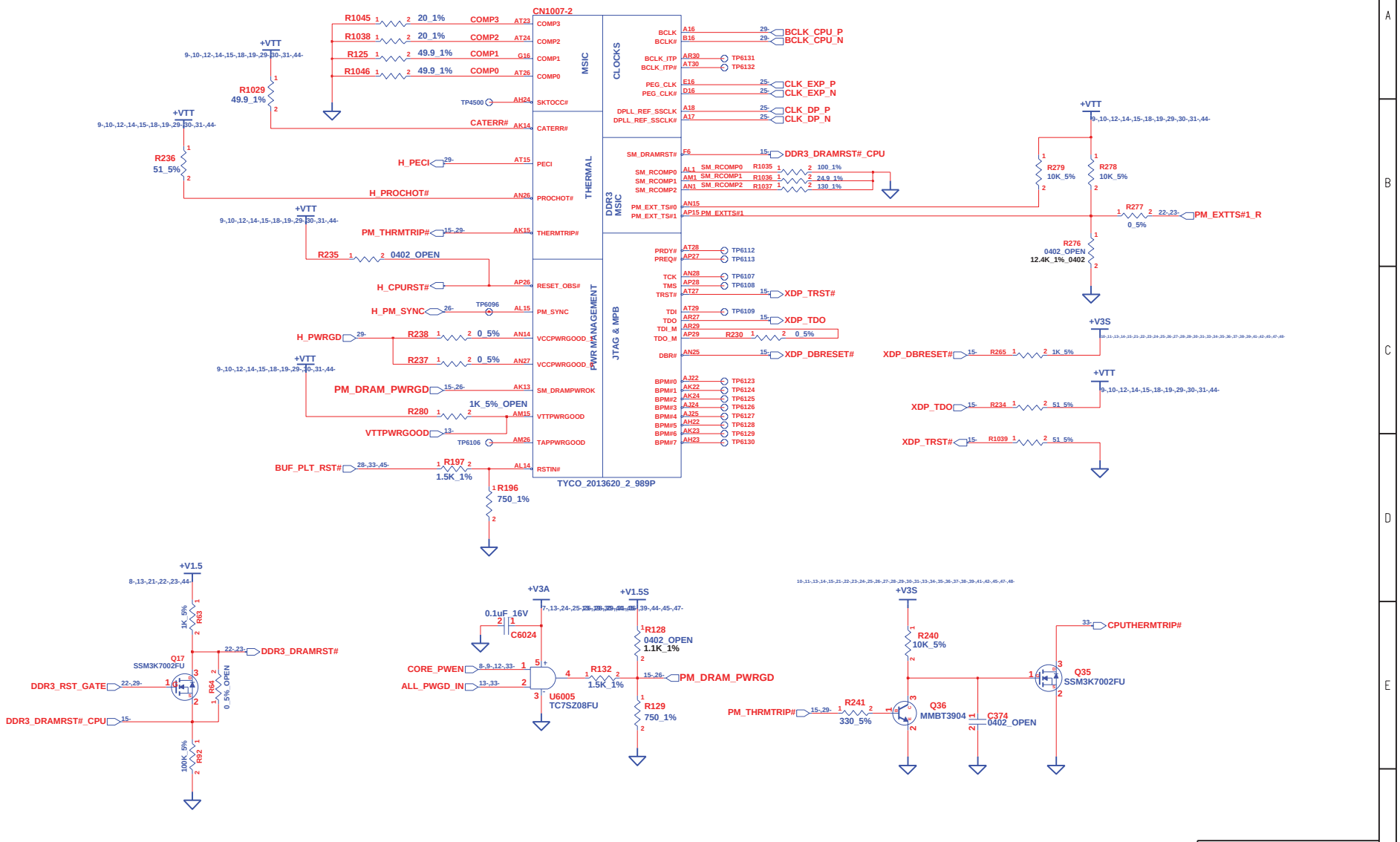

INVENTEC			
TITLE MURRAY CPU-1			
SIZE A3	CODE CS	DOC. NUMBER 1310A23512-0-MTR	REV A03
CHANGE by Chou, Leo	1-Mar-2010	SHEET 15 OF 48	

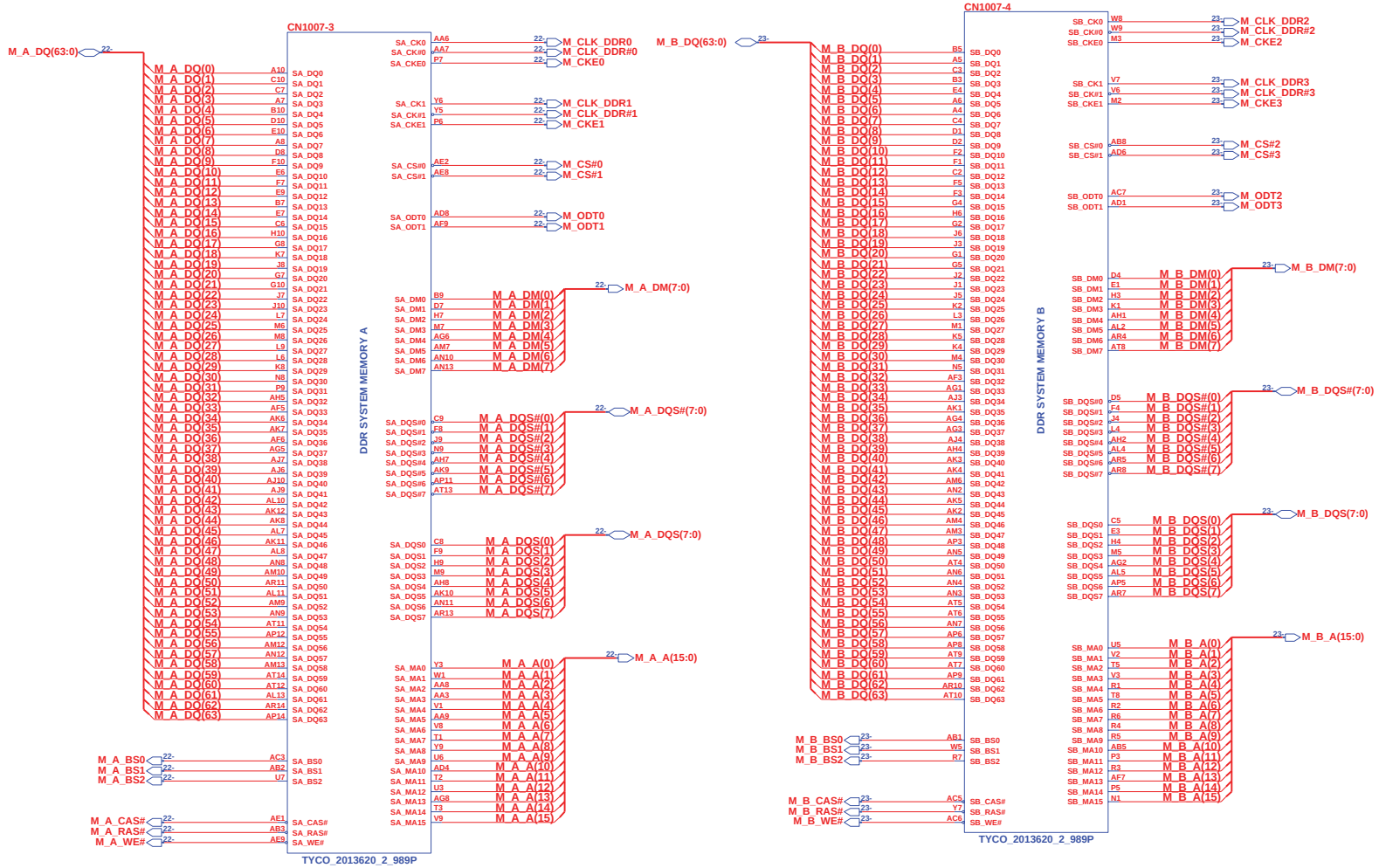

INVENTEC			
TITLE MURRAY CPU-2			
SIZE A3	CODE CS	DOC. NUMBER 1310A23512-0-MTR	REV A03
CHANGE by Chou, Leo	1-Mar-2010	SHEET 16 OF 48	

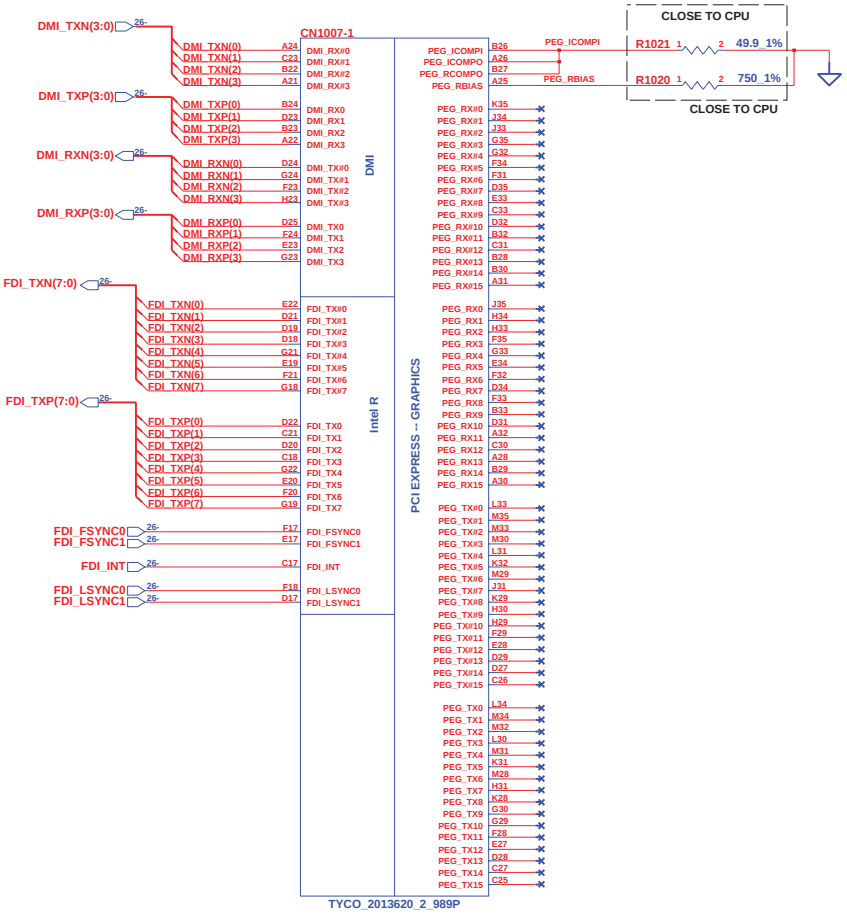

CHANGE by	Chou, Leo	1-Mar-2010	

INVENTEC

TITLE
MURRAY
CPU-3

SIZE	CODE	DOC. NUMBER	REV
A3	CS	1310A23512-0-MTR	A03

SHEET 17 OF 48

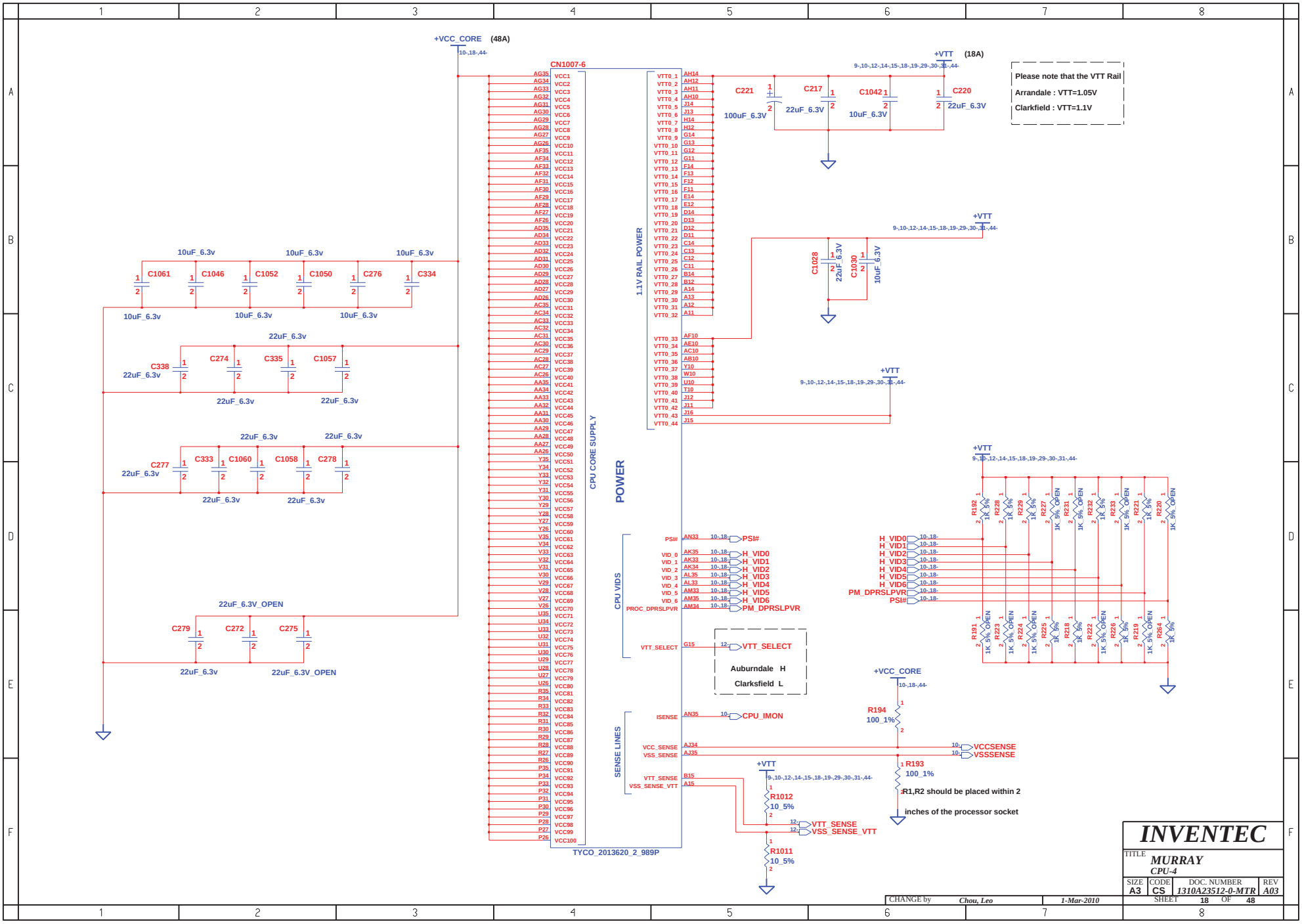
+VCC_CORE (48A)
10-,18-,44-
CN1007-6
CPU CORE SUPPLY
POWER
1.1V RAIL POWER
TYCO_2013620_2_989P
+VTT (18A)
9-,10-,12-,14-,15-,18-,19-,29-,30-,31-,44-
Please note that the VTT Rail
Arrandale : VTT=1.05V
Clarkfield : VTT=1.1V
C221 100uF_6.3V
C217 22uF_6.3V
C1042 10uF_6.3V
C220 22uF_6.3V
C1028 22uF_6.3V
C1030 10uF_6.3V
10uF_6.3v
C1061 C1046 C1052 C1050 C276 C334
22uF_6.3v
C338 C274 C335 C1057
C277 C333 C1060 C1058 C278
22uF_6.3V_OPEN
C279 C272 C275
CPU VIDS
PSI#
VID_0 VID_1 VID_2 VID_3 VID_4 VID_5 VID_6
PROC_DPRSLPVR
VTT_SELECT
Auburndale H
Clarksfield L
SENSE LINES
ISENSE
CPU_IMON
VCC_SENSE
VSS_SENSE
VTT_SENSE
VSS_SENSE_VTT
H_VID0 H_VID1 H_VID2 H_VID3 H_VID4 H_VID5 H_VID6
PM_DPRSLPVR
R194 100_1%
R193 100_1%
R1012 10_5%
R1011 10_5%
R1,R2 should be placed within 2
inches of the processor socket
INVENTEC
TITLE MURRAY
CPU-4
SIZE A3
CODE CS
DOC. NUMBER 1310A23512-0-MTR
REV A03
SHEET 18 OF 48
CHANGE by Chou, Leo
1-Mar-2010

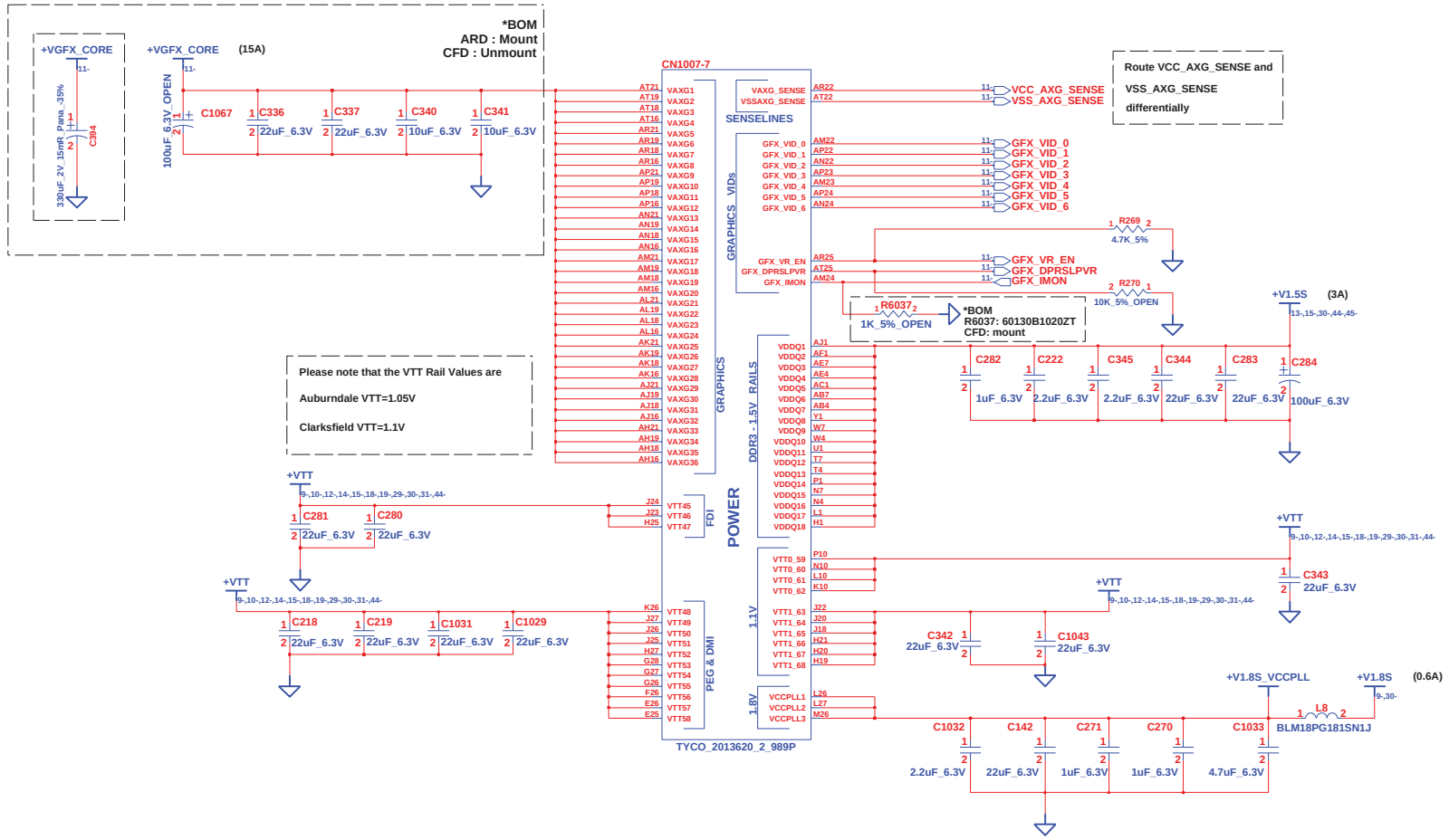

INVENTEC

TITLE MURRAY
CPU-5

SIZE	CODE	DOC. NUMBER	REV
A3	CS	1310A23512-0-MTR	A03

CHANGE by Chou, Leo 1-Mar-2010 SHEET 19 OF 48

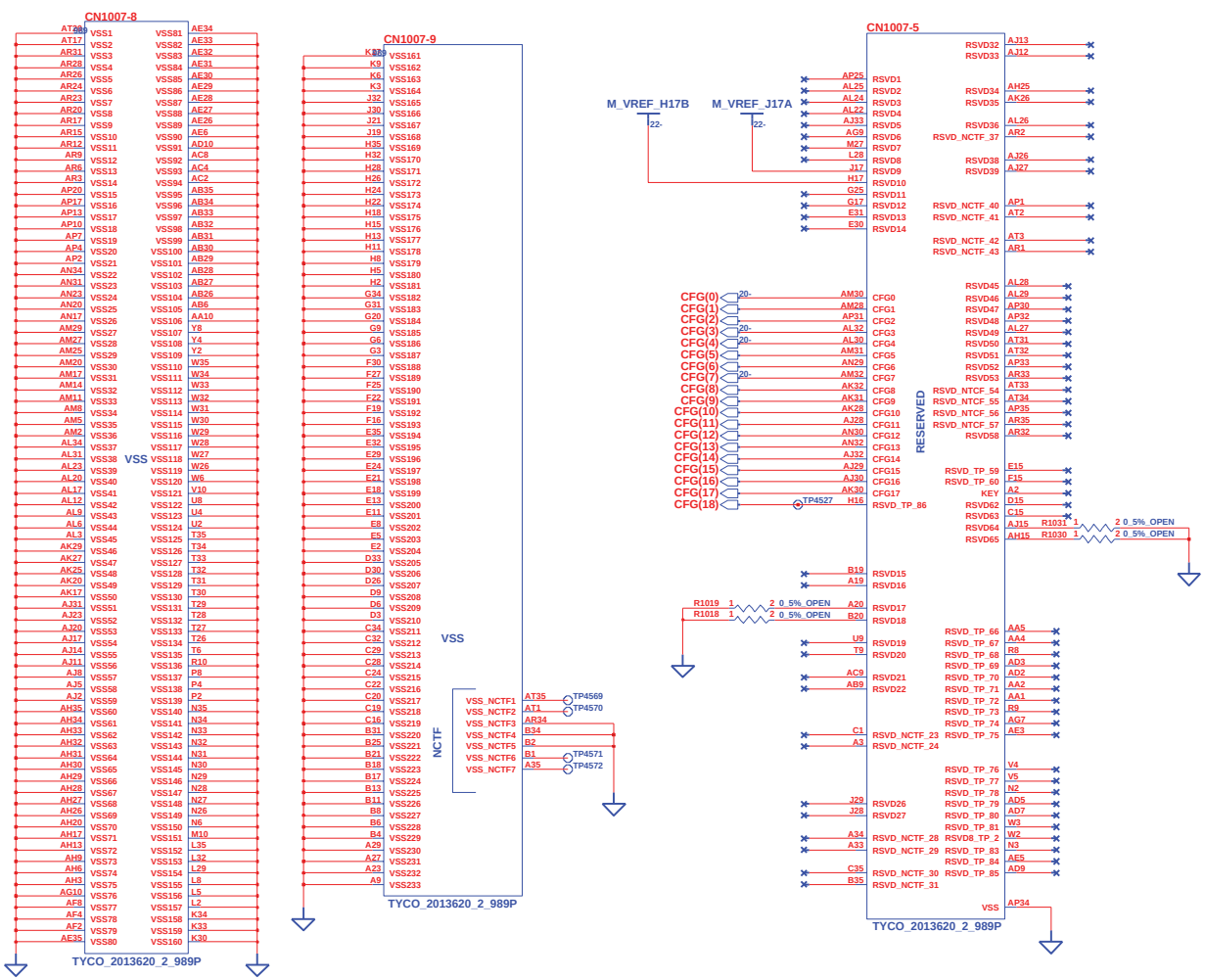

PCI-Express Configuration Select	
CFG0	1:Single PEG 0:Bifurcation enabled

CFG3 - PCI-Express Static Lane Reversal	
CFG3	1:Normal Operation 0:Lane Numbers Reversed 15 -> 0, 14 ->1, ...

CFG4 - Display Port Presence	
CFG4	1:Disabled; No Physical Display Port attached to Embedded Display Port 0: Enabled; An external Display Port device is connected to the Embedded Display Port

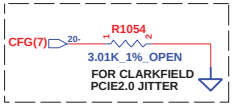

CFG7 - Reserved : Temporanily used for early Clarksfield samples
Clarksfield (Only for early samples pre-ES1)
Connect to GND with 3.01K Ohm 5% Resistor

INVENTEC			
TITLE MURRAY CPU-6			
SIZE A3	CODE CS	DOC. NUMBER 1310A23512-0-MTR	REV A03
CHANGE by Chou, Leo	1-Mar-2010	SHEET 20 OF 48	

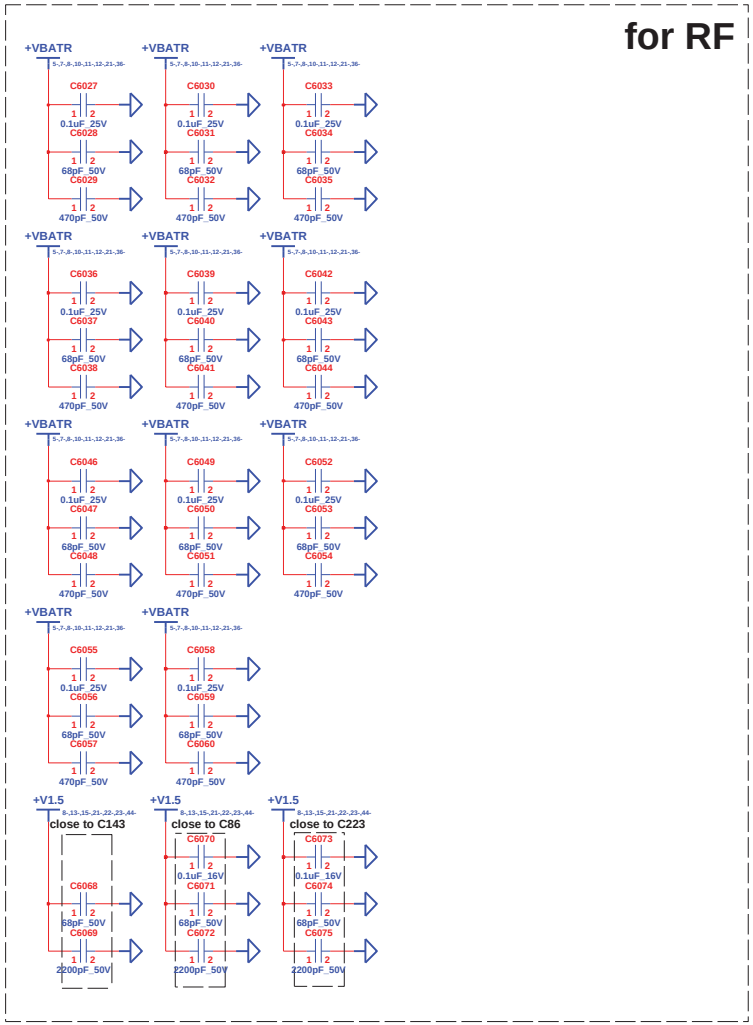

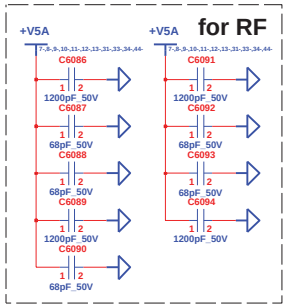

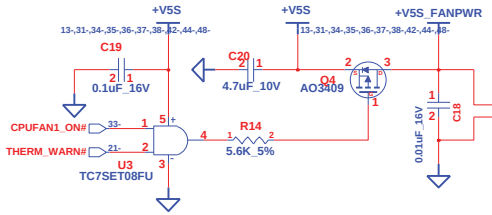

*BOM
CN3 : 6012B0069908

FAN CONN

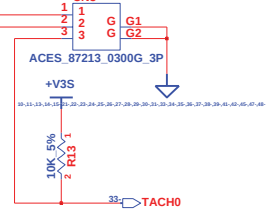

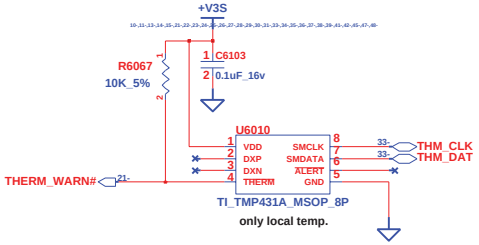

SMB Address is 100 1100

CHANGE by	Chou, Leo	1-Mar-2010	

INVENTEC

TITLE
MURRAY
Thermal, Fan & XDP

SIZE	CODE	DOC. NUMBER	REV
A3	CS	1310A23512-0-MTR	A03

SHEET 21 OF 48

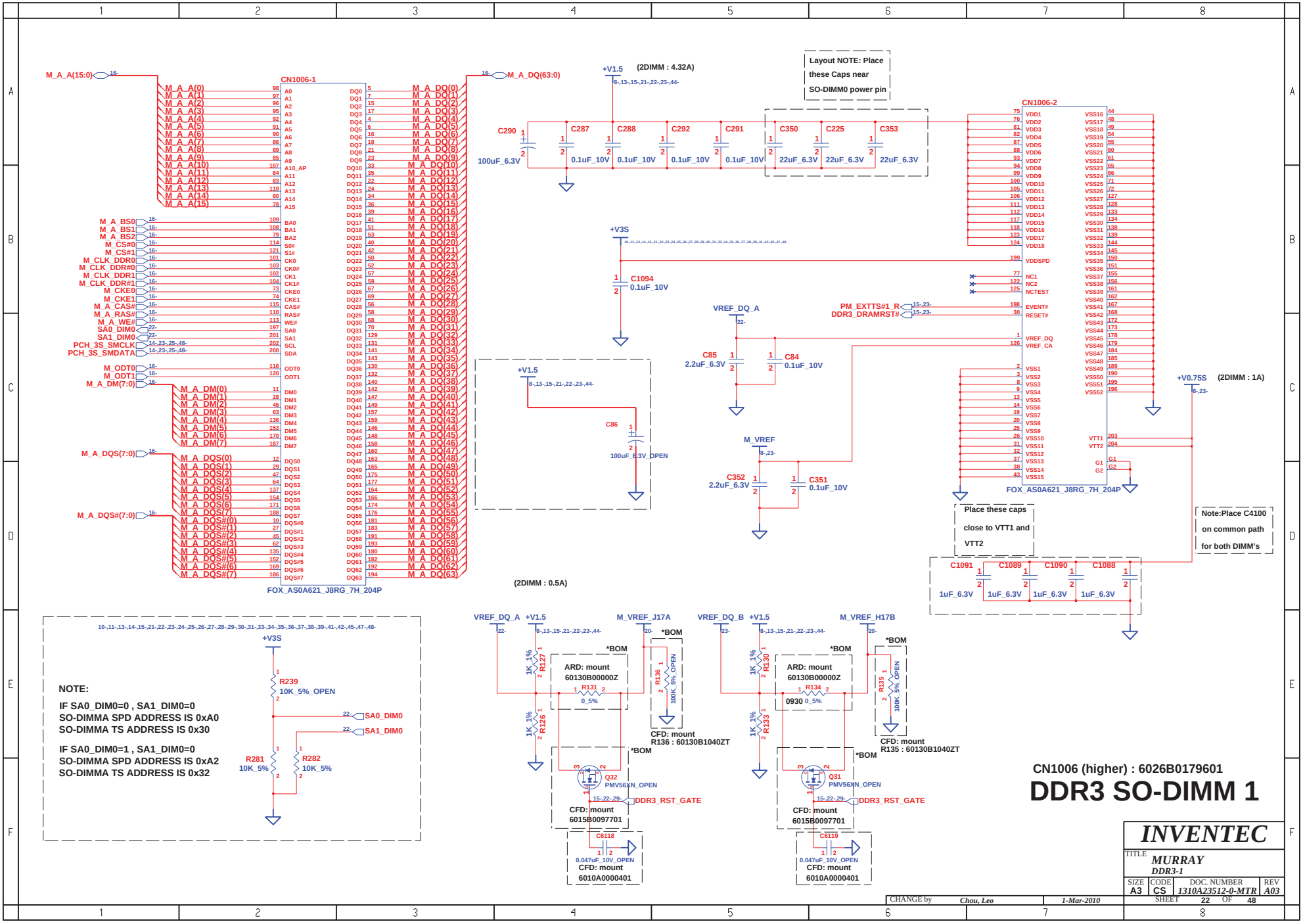
CN1006-1
FOX_AS0A621_J8RG_7H_204P
M_A_A(15:0)
M_A_DQ(63:0)
M_A_BS0
M_A_BS1
M_A_BS2
M_CS#0
M_CS#1
M_CLK_DDR0
M_CLK_DDR#0
M_CLK_DDR1
M_CLK_DDR#1
M_CKE0
M_CKE1
M_A_CAS#
M_A_RAS#
M_A_WE#
SA0_DIM0
SA1_DIM0
PCH_3S_SMCLK
PCH_3S_SMDATA
M_ODT0
M_ODT1
M_A_DM(7:0)
M_A_DQS(7:0)
M_A_DQS#(7:0)
+V1.5
(2DIMM : 4.32A)
Layout NOTE: Place these Caps near SO-DIMM0 power pin
C290 100uF_6.3V
C287 0.1uF_10V
C288 0.1uF_10V
C292 0.1uF_10V
C291 0.1uF_10V
C350 22uF_6.3V
C225 22uF_6.3V
C353 22uF_6.3V
CN1006-2
FOX_AS0A621_J8RG_7H_204P
+V3S
C1094 0.1uF_10V
VREF_DQ_A
PM_EXTTS#1_R
DDR3_DRAMRST#
C85 2.2uF_6.3V
C84 0.1uF_10V
M_VREF
C352 2.2uF_6.3V
C351 0.1uF_10V
C86 100uF_6.3V_OPEN
+V0.75S
(2DIMM : 1A)
Place these caps close to VTT1 and VTT2
Note:Place C4100 on common path for both DIMM's
C1091 1uF_6.3V
C1089 1uF_6.3V
C1090 1uF_6.3V
C1088 1uF_6.3V
(2DIMM : 0.5A)
NOTE:
IF SA0_DIM0=0 , SA1_DIM0=0
SO-DIMMA SPD ADDRESS IS 0xA0
SO-DIMMA TS ADDRESS IS 0x30
IF SA0_DIM0=1 , SA1_DIM0=0
SO-DIMMA SPD ADDRESS IS 0xA2
SO-DIMMA TS ADDRESS IS 0x32
R239 10K_5%_OPEN
R281 10K_5%
R282 10K_5%
SA0_DIM0
SA1_DIM0
VREF_DQ_A
M_VREF_J17A
VREF_DQ_B
M_VREF_H17B
*BOM
ARD: mount 60130B00000Z
R127 1K_1%
R126 1K_1%
R131 0_5%
R136 100K_5%_OPEN
CFD: mount R136 : 60130B1040ZT
R130 1K_1%
R133 1K_1%
R134 0930 0_5%
R135 100K_5%_OPEN
CFD: mount R135 : 60130B1040ZT
Q32 PMV56XN_OPEN
Q31 PMV56XN_OPEN
DDR3_RST_GATE
CFD: mount 6015B0097701
C6118 0.047uF_10V_OPEN
C6119 0.047uF_10V_OPEN
CFD: mount 6010A0000401
CN1006 (higher) : 6026B0179601
DDR3 SO-DIMM 1
INVENTEC
TITLE MURRAY DDR3-1
SIZE A3
CODE CS
DOC. NUMBER 1310A23512-0-MTR
REV A03
SHEET 22 OF 48
CHANGE by Chou, Leo
1-Mar-2010

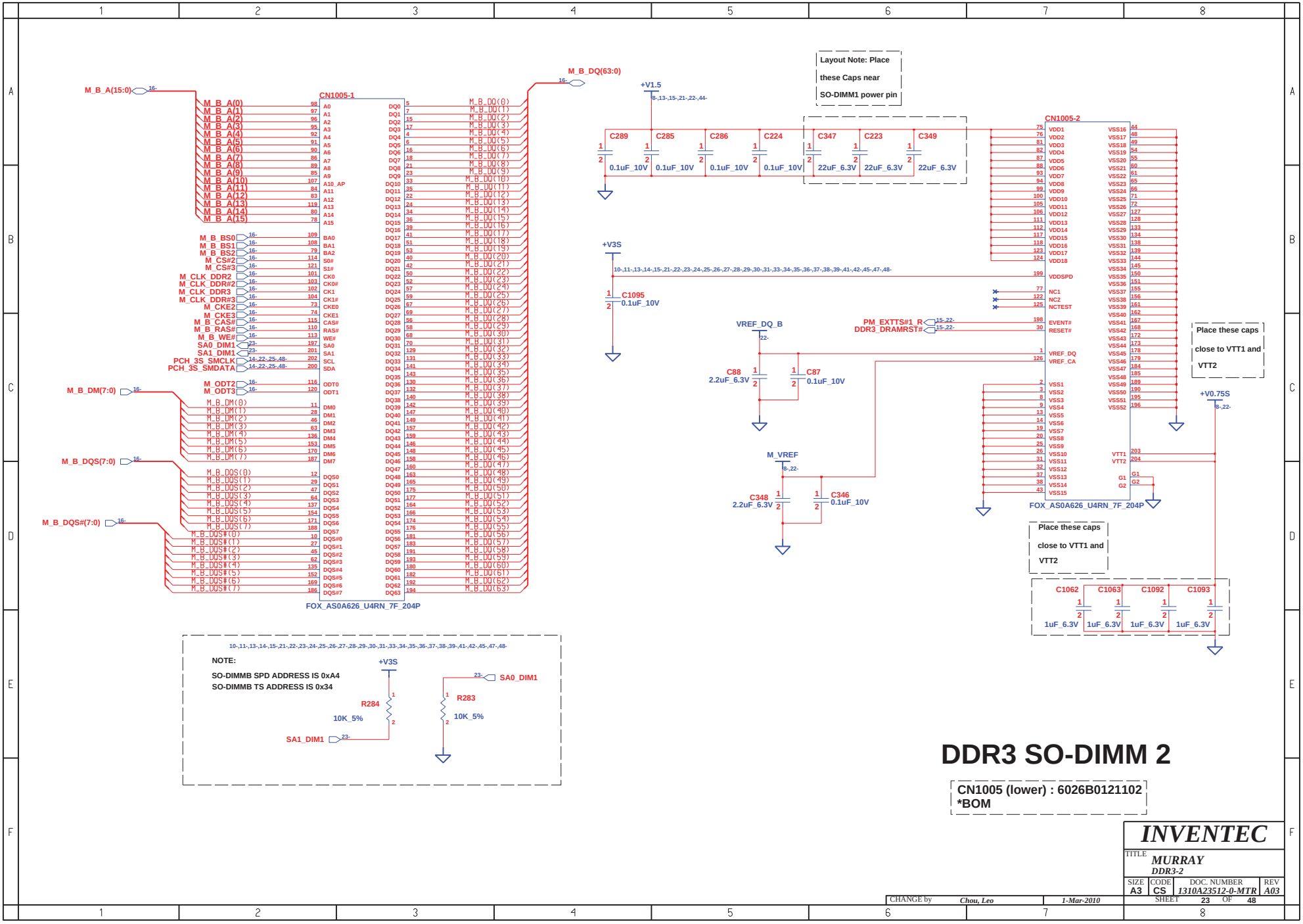
CN1005-1
FOX_AS0A626_U4RN_7F_204P
M_B_A(15:0)
M_B_DQ(63:0)
M_B_DM(7:0)
M_B_DQS(7:0)
M_B_DQS#(7:0)
M_B_BS0
M_B_BS1
M_B_BS2
M_CS#2
M_CS#3
M_CLK_DDR2
M_CLK_DDR#2
M_CLK_DDR3
M_CLK_DDR#3
M_CKE2
M_CKE3
M_B_CAS#
M_B_RAS#
M_B_WE#
SA0_DIM1
SA1_DIM1
PCH_3S_SMCLK
PCH_3S_SMDATA
M_ODT2
M_ODT3
+V1.5
+V3S
+V0.75S
VREF_DQ_B
M_VREF
PM_EXTTS#1_R
DDR3_DRAMRST#
CN1005-2
FOX_AS0A626_U4RN_7F_204P
Layout Note: Place these Caps near SO-DIMM1 power pin
Place these caps close to VTT1 and VTT2
C289 0.1uF_10V
C285 0.1uF_10V
C286 0.1uF_10V
C224 0.1uF_10V
C347 22uF_6.3V
C223 22uF_6.3V
C349 22uF_6.3V
C1095 0.1uF_10V
C88 2.2uF_6.3V
C87 0.1uF_10V
C348 2.2uF_6.3V
C346 0.1uF_10V
C1062 1uF_6.3V
C1063 1uF_6.3V
C1092 1uF_6.3V
C1093 1uF_6.3V
NOTE:
SO-DIMMB SPD ADDRESS IS 0xA4
SO-DIMMB TS ADDRESS IS 0x34
R284 10K_5%
R283 10K_5%
SA1_DIM1
SA0_DIM1
DDR3 SO-DIMM 2
CN1005 (lower) : 6026B0121102
*BOM
INVENTEC
TITLE MURRAY
DDR3-2
SIZE A3
CODE CS
DOC. NUMBER 1310A23512-0-MTR
REV A03
SHEET 23 OF 48
CHANGE by Chou, Leo
1-Mar-2010

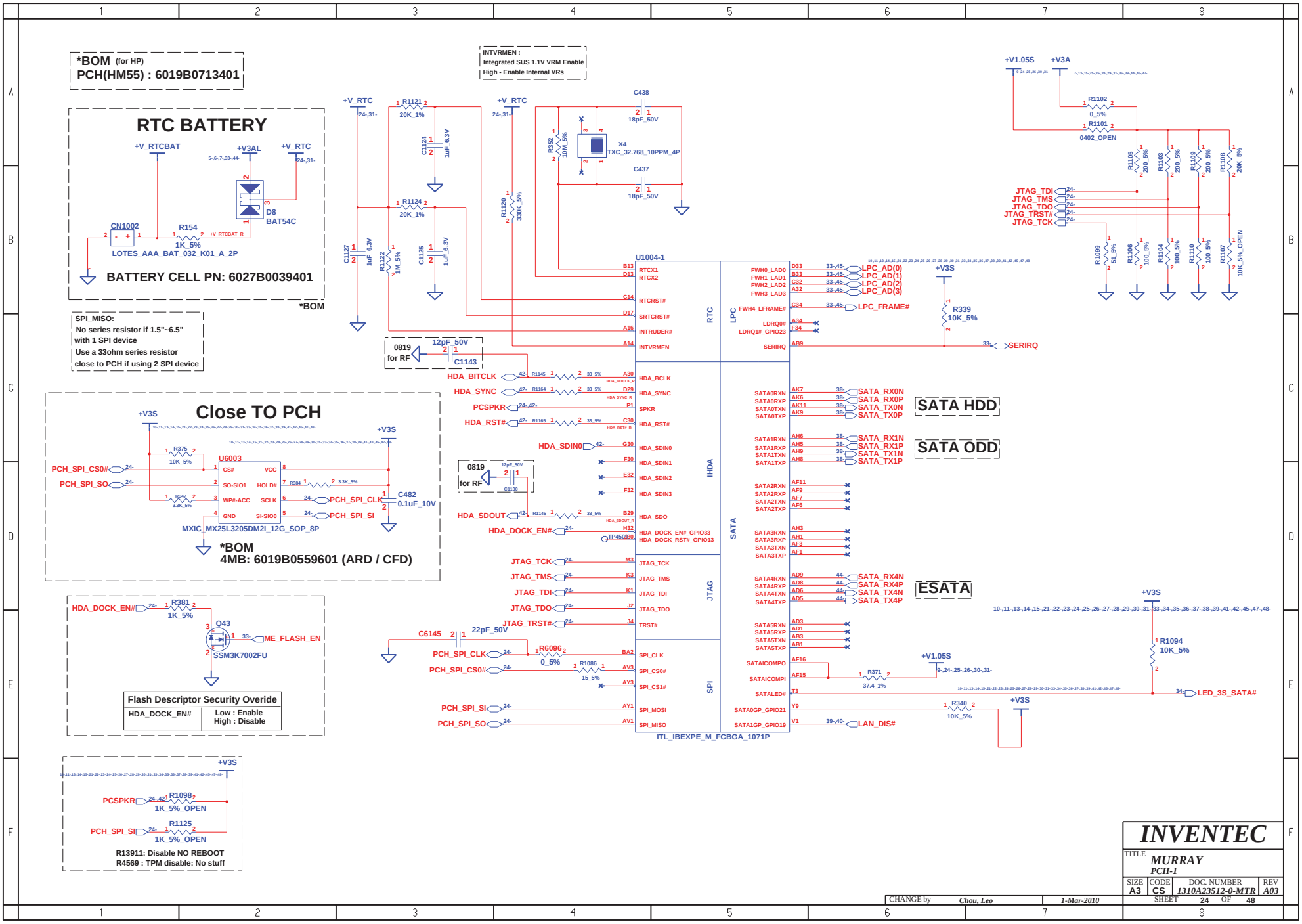
*BOM (for HP)
PCH(HM55) : 6019B0713401
RTC BATTERY
+V_RTCBAT
+V3AL
+V_RTC
D8
BAT54C
CN1002
R154
1K_5%
LOTES_AAA_BAT_032_K01_A_2P
BATTERY CELL PN: 6027B0039401
*BOM
INTVRMEN :
Integrated SUS 1.1V VRM Enable
High - Enable Internal VRs
X4
TXC_32.768_10PPM_4P
C438
18pF_50V
C437
18pF_50V
R1121
20K_1%
R1124
20K_1%
C1124
1uF_6.3V
C1125
1uF_6.3V
C1127
1uF_6.3V
R1122
1M_5%
R1120
330K_5%
R352
10M_5%
SPI_MISO:
No series resistor if 1.5"~6.5"
with 1 SPI device
Use a 33ohm series resistor
close to PCH if using 2 SPI device
0819
for RF
12pF_50V
C1143
Close TO PCH
U6003
PCH_SPI_CS0#
PCH_SPI_SO
PCH_SPI_CLK
PCH_SPI_SI
C482
0.1uF_10V
MXIC_MX25L3205DM2I_12G_SOP_8P
*BOM
4MB: 6019B0559601 (ARD / CFD)
HDA_DOCK_EN#
R381
1K_5%
Q43
SSM3K7002FU
ME_FLASH_EN
Flash Descriptor Security Overide
HDA_DOCK_EN#
Low : Enable
High : Disable
PCSPKR
R1098
1K_5%_OPEN
PCH_SPI_SI
R1125
1K_5%_OPEN
R13911: Disable NO REBOOT
R4569 : TPM disable: No stuff
U1004-1
RTC
LPC
IHDA
SATA
JTAG
SPI
ITL_IBEXPE_M_FCBGA_1071P
HDA_BITCLK
HDA_SYNC
HDA_RST#
HDA_SDIN0
HDA_SDOUT
JTAG_TCK
JTAG_TMS
JTAG_TDI
JTAG_TDO
JTAG_TRST#
C6145
22pF_50V
R6096
0_5%
R1086
15_5%
LPC_AD(0)
LPC_AD(1)
LPC_AD(2)
LPC_AD(3)
LPC_FRAME#
SERIRQ
R339
10K_5%
SATA HDD
SATA_RX0N
SATA_RX0P
SATA_TX0N
SATA_TX0P
SATA ODD
SATA_RX1N
SATA_RX1P
SATA_TX1N
SATA_TX1P
ESATA
SATA_RX4N
SATA_RX4P
SATA_TX4N
SATA_TX4P
R371
37.4_1%
R340
10K_5%
LAN_DIS#
LED_3S_SATA#
R1094
10K_5%
+V1.05S
+V3A
R1102
0_5%
R1101
0402_OPEN
JTAG_TDI
JTAG_TMS
JTAG_TDO
JTAG_TRST#
JTAG_TCK
R1099
51_5%
R1106
100_5%
R1104
100_5%
R1110
100_5%
R1107
10K_5%_OPEN
INVENTEC
TITLE
MURRAY
PCH-1
SIZE A3
CODE CS
DOC. NUMBER 1310A23512-0-MTR
REV A03
SHEET 24 OF 48
CHANGE by Chou, Leo
1-Mar-2010

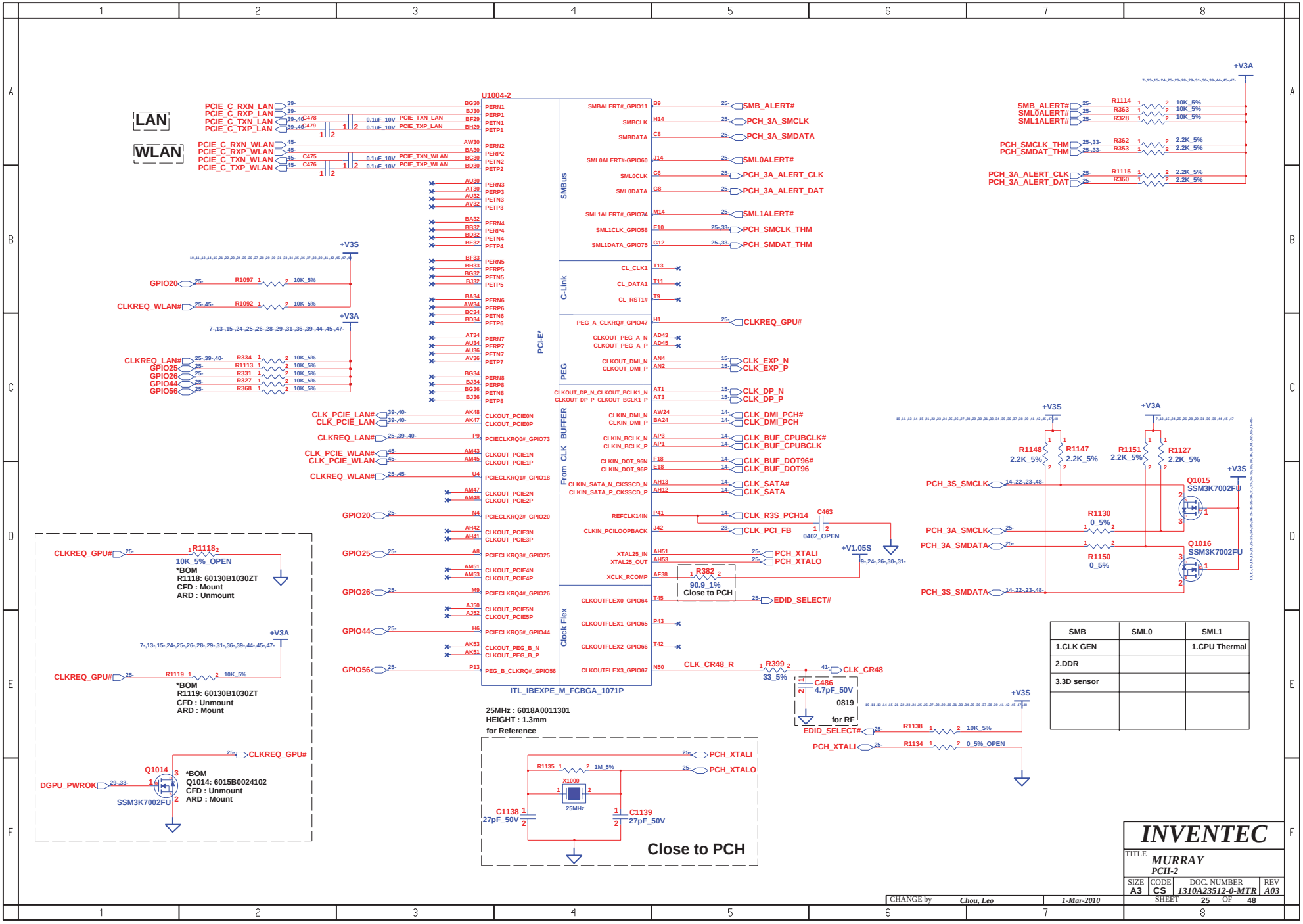

SMB	SML0	SML1
1.CLK GEN		1.CPU Thermal
2.DDR		
3.3D sensor		

INVENTEC

TITLE: MURRAY PCH-2

SIZE	CODE	DOC. NUMBER	REV
A3	CS	1310A23512-0-MTR	A03

SHEET 25 OF 48

CHANGE by Chou, Leo 1-Mar-2010

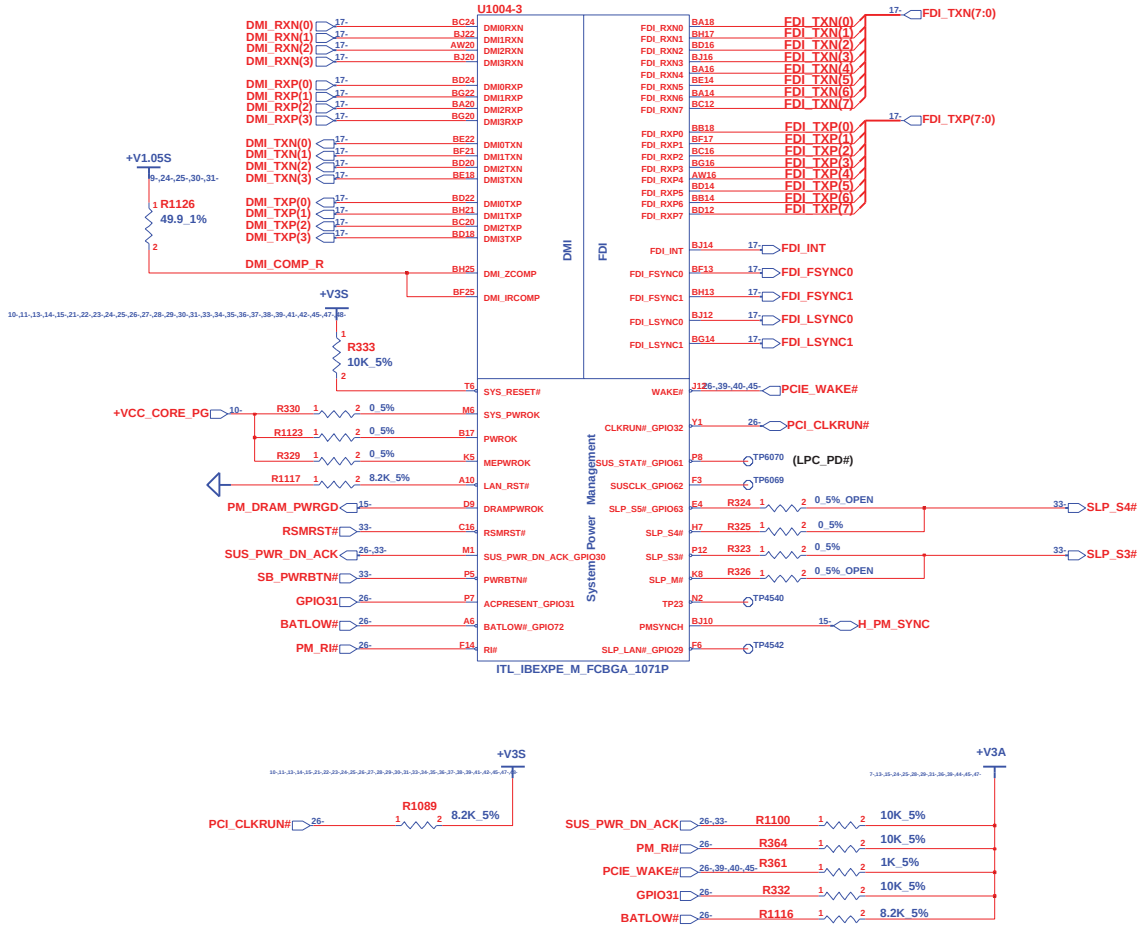

CHANGE by	Chou, Leo	1-Mar-2010	

INVENTEC

TITLE: MURRAY
PCH-3

SIZE	CODE	DOC. NUMBER	REV
A3	CS	1310A23512-0-MTR	A03

SHEET 26 OF 48

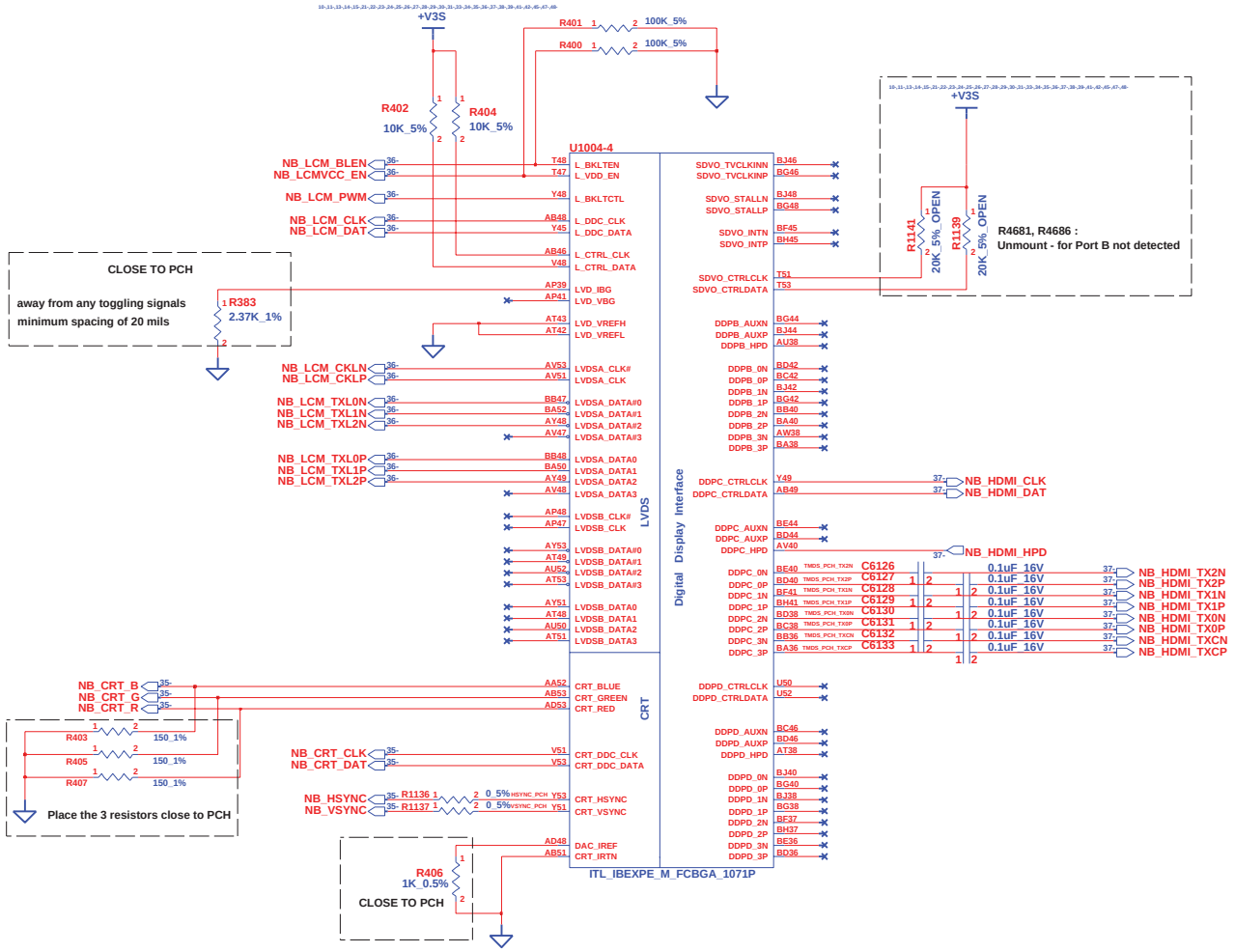

CHANGE by	Chou, Leo	1-Mar-2010	

INVENTEC

TITLE: MURRAY
PCH-4

SIZE	CODE	DOC. NUMBER	REV
A3	CS	1310A23512-0-MTR	A03

SHEET 27 OF 48

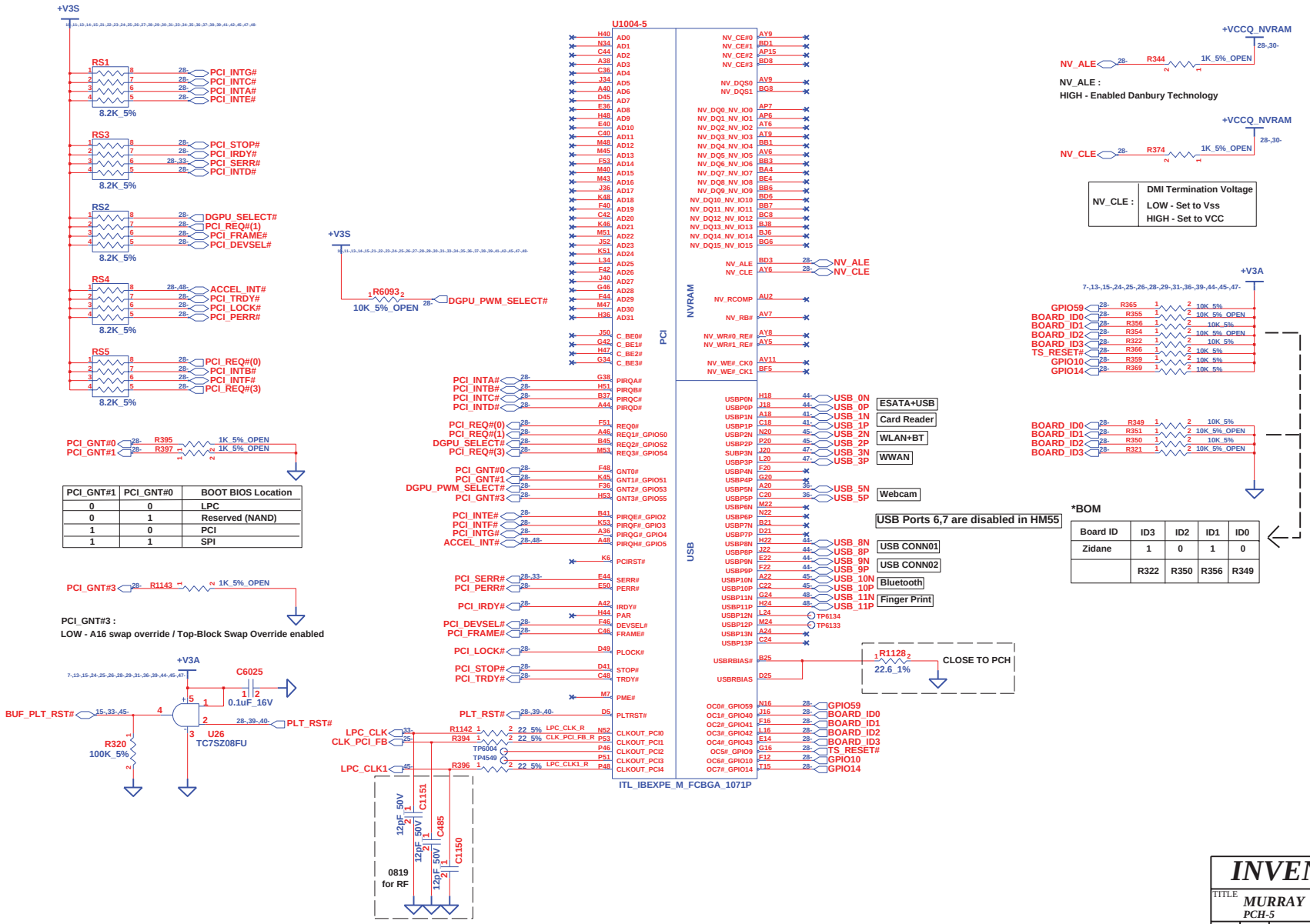
+V3S
RS1
PCI_INTG#
PCI_INTC#
PCI_INTA#
PCI_INTE#
8.2K_5%
RS3
PCI_STOP#
PCI_IRDY#
PCI_SERR#
PCI_INTD#
8.2K_5%
RS2
DGPU_SELECT#
PCI_REQ#(1)
PCI_FRAME#
PCI_DEVSEL#
8.2K_5%
RS4
ACCEL_INT#
PCI_TRDY#
PCI_LOCK#
PCI_PERR#
8.2K_5%
RS5
PCI_REQ#(0)
PCI_INTB#
PCI_INTF#
PCI_REQ#(3)
8.2K_5%
PCI_GNT#0
PCI_GNT#1
R395
R397
1K_5%_OPEN
1K_5%_OPEN
PCI_GNT#3
R1143
1K_5%_OPEN
PCI_GNT#3 :
LOW - A16 swap override / Top-Block Swap Override enabled
+V3A
C6025
0.1uF_16V
BUF_PLT_RST#
PLT_RST#
R320
100K_5%
U26
TC7SZ08FU
+V3S
R6093
10K_5%_OPEN
DGPU_PWM_SELECT#
U1004-5
PCI
NVRAM
USB
ITL_IBEXPE_M_FCBGA_1071P
PCI_INTA#
PCI_INTB#
PCI_INTC#
PCI_INTD#
PCI_REQ#(0)
PCI_REQ#(1)
DGPU_SELECT#
PCI_REQ#(3)
PCI_GNT#0
PCI_GNT#1
DGPU_PWM_SELECT#
PCI_GNT#3
PCI_INTE#
PCI_INTF#
PCI_INTG#
ACCEL_INT#
PCIRST#
PCI_SERR#
PCI_PERR#
PCI_IRDY#
PCI_DEVSEL#
PCI_FRAME#
PCI_LOCK#
PCI_STOP#
PCI_TRDY#
PLT_RST#
LPC_CLK
CLK_PCI_FB
LPC_CLK1
R1142
R394
R396
22_5%
LPC_CLK_R
CLK_PCI_FB_R
LPC_CLK1_R
TP6604
TP4549
12pF_50V
C1151
C485
C1150
0819
for RF
NV_ALE
NV_CLE
NV_RCOMP
NV_RB#
NV_WR#0_RE#
NV_WR#1_RE#
NV_WE#_CK0
NV_WE#_CK1
ESATA+USB
Card Reader
WLAN+BT
WWAN
Webcam
USB Ports 6,7 are disabled in HM55
USB CONN01
USB CONN02
Bluetooth
Finger Print
TP6134
TP6133
R1128
22.6_1%
CLOSE TO PCH
GPIO59
BOARD_ID0
BOARD_ID1
BOARD_ID2
BOARD_ID3
TS_RESET#
GPIO10
GPIO14
+VCCQ_NVRAM
NV_ALE
R344
1K_5%_OPEN
NV_ALE :
HIGH - Enabled Danbury Technology
NV_CLE
R374
1K_5%_OPEN
NV_CLE :
DMI Termination Voltage
LOW - Set to Vss
HIGH - Set to VCC
+V3A
GPIO59
BOARD_ID0
BOARD_ID1
BOARD_ID2
BOARD_ID3
TS_RESET#
GPIO10
GPIO14
R365
R355
R356
R354
R322
R366
R359
R369
10K_5%
10K_5%_OPEN
R349
R351
R350
R321
*BOM
Board ID | ID3 | ID2 | ID1 | ID0
Zidane | 1 | 0 | 1 | 0
R322 | R350 | R356 | R349
INVENTEC
TITLE
MURRAY
PCH-5
SIZE A3
CODE CS
DOC. NUMBER 1310A23512-0-MTR
REV A03
SHEET 28 OF 48
CHANGE by Chou, Leo
1-Mar-2010

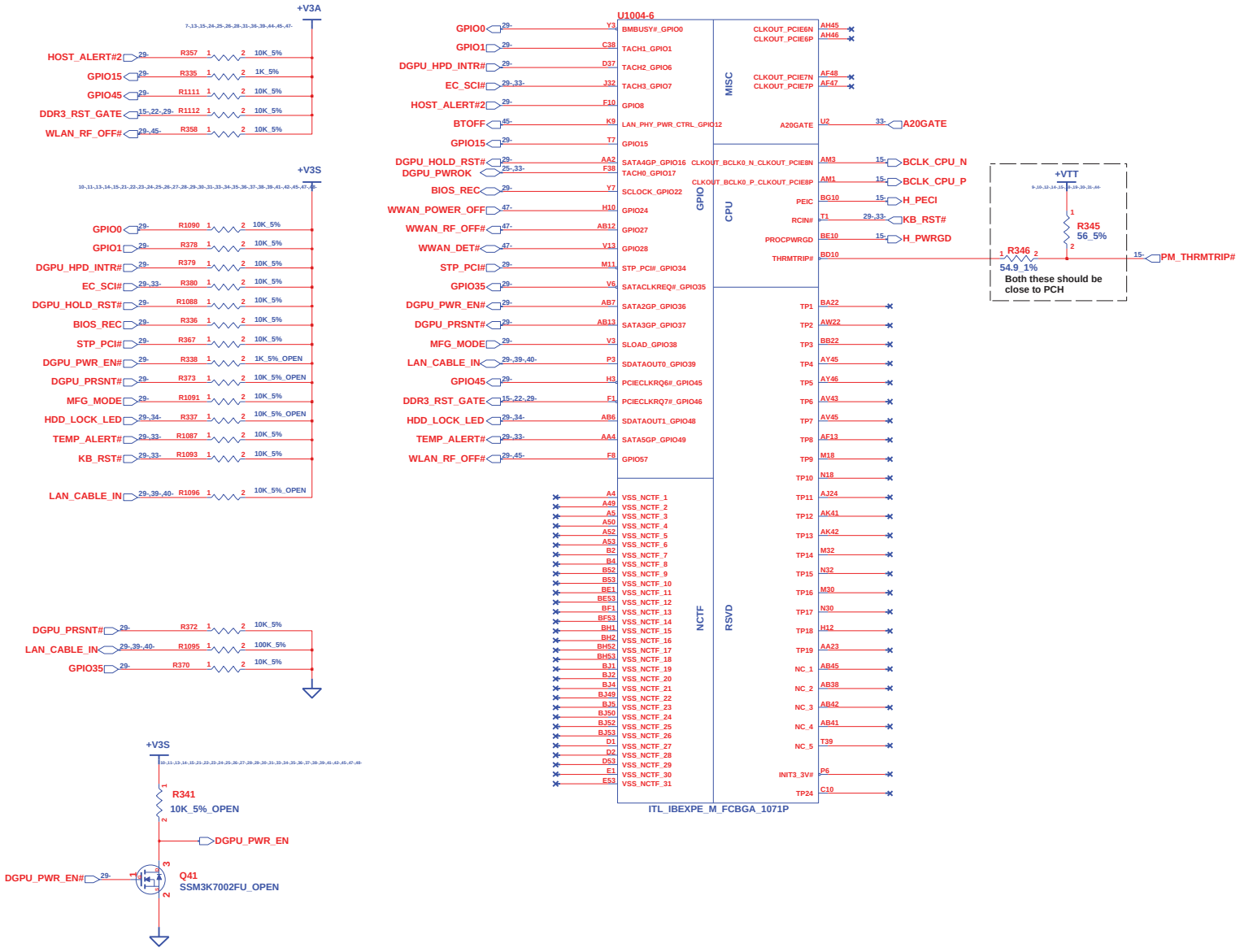

CHANGE by	Chou, Leo	1-Mar-2010

INVENTEC

TITLE: MURRAY
PCH-6

SIZE	CODE	DOC. NUMBER	REV
A3	CS	1310A23512-0-MTR	A03

SHEET 29 OF 48

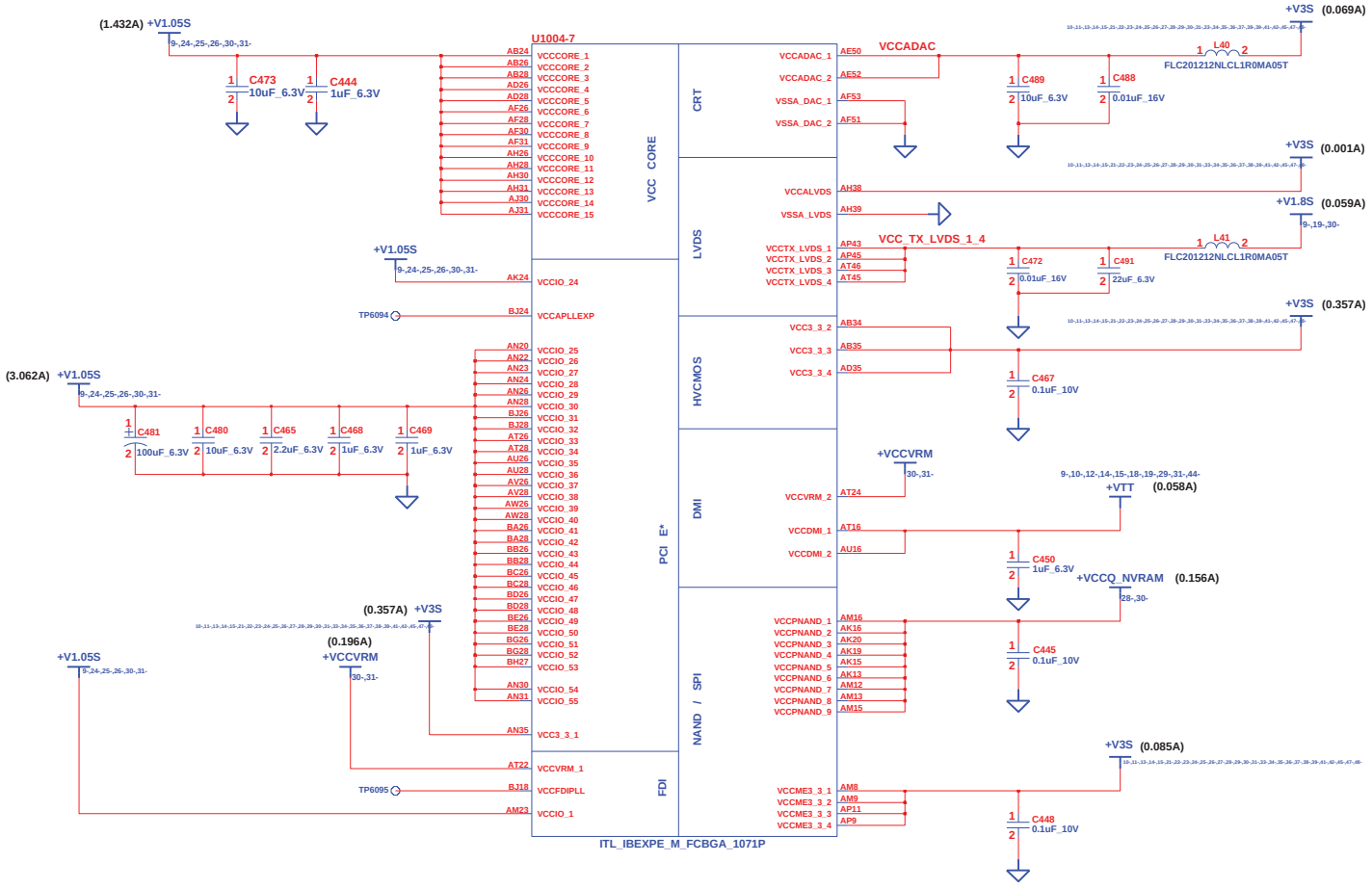

INVENTEC			
TITLE MURRAY PCH-7			
SIZE A3	CODE CS	DOC. NUMBER 1310A23512-0-MTR	REV A03
CHANGE by Chou, Leo	1-Mar-2010	SHEET 30 OF 48	

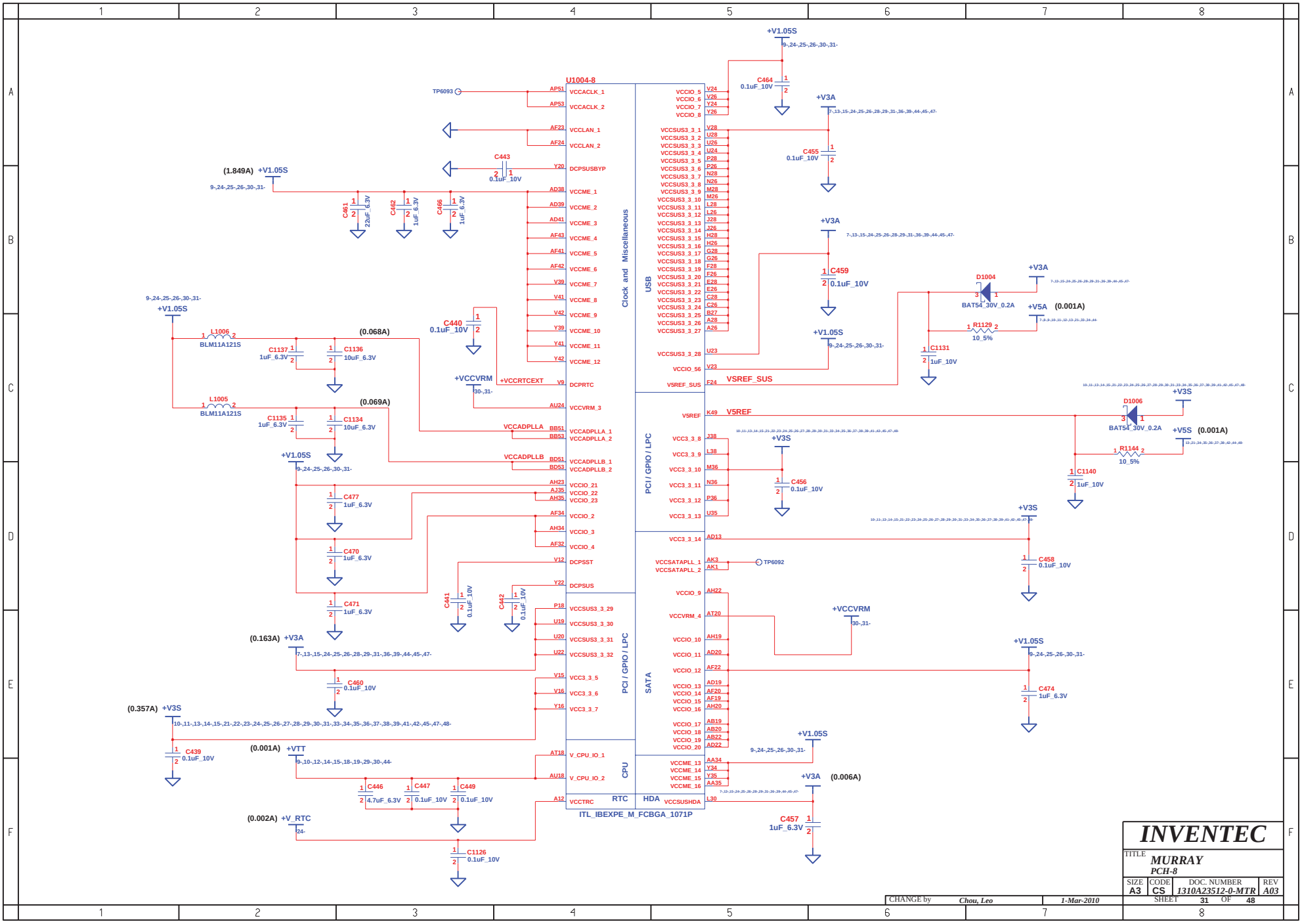

CHANGE by	Chou, Leo	1-Mar-2010	

INVENTEC

TITLE: MURRAY PCH-8

SIZE	CODE	DOC. NUMBER	REV
A3	CS	1310A23512-0-MTR	A03

SHEET 31 OF 48

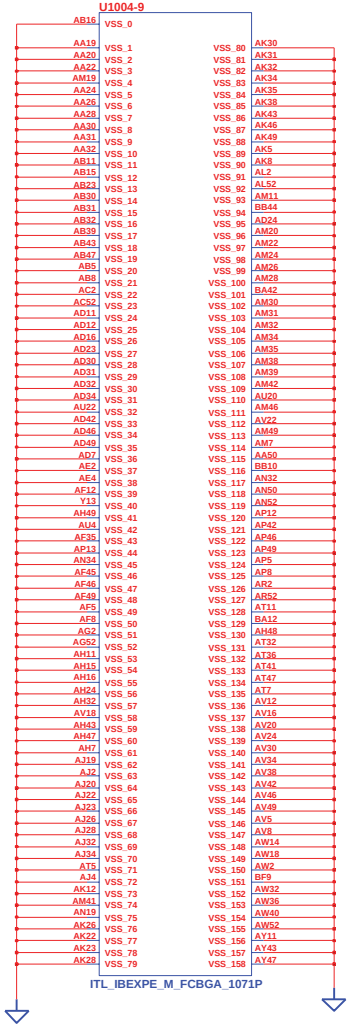

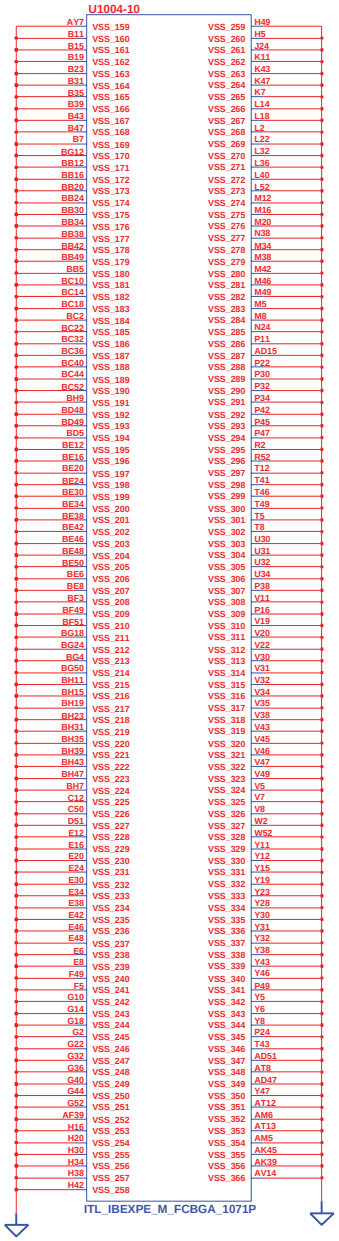

CHANGE by	Chou, Leo	1-Mar-2010	

INVENTEC

TITLE *MURRAY*
PCH-9

SIZE	CODE	DOC. NUMBER	REV
A3	CS	1310A23512-0-MTR	A03

SHEET 32 OF 48

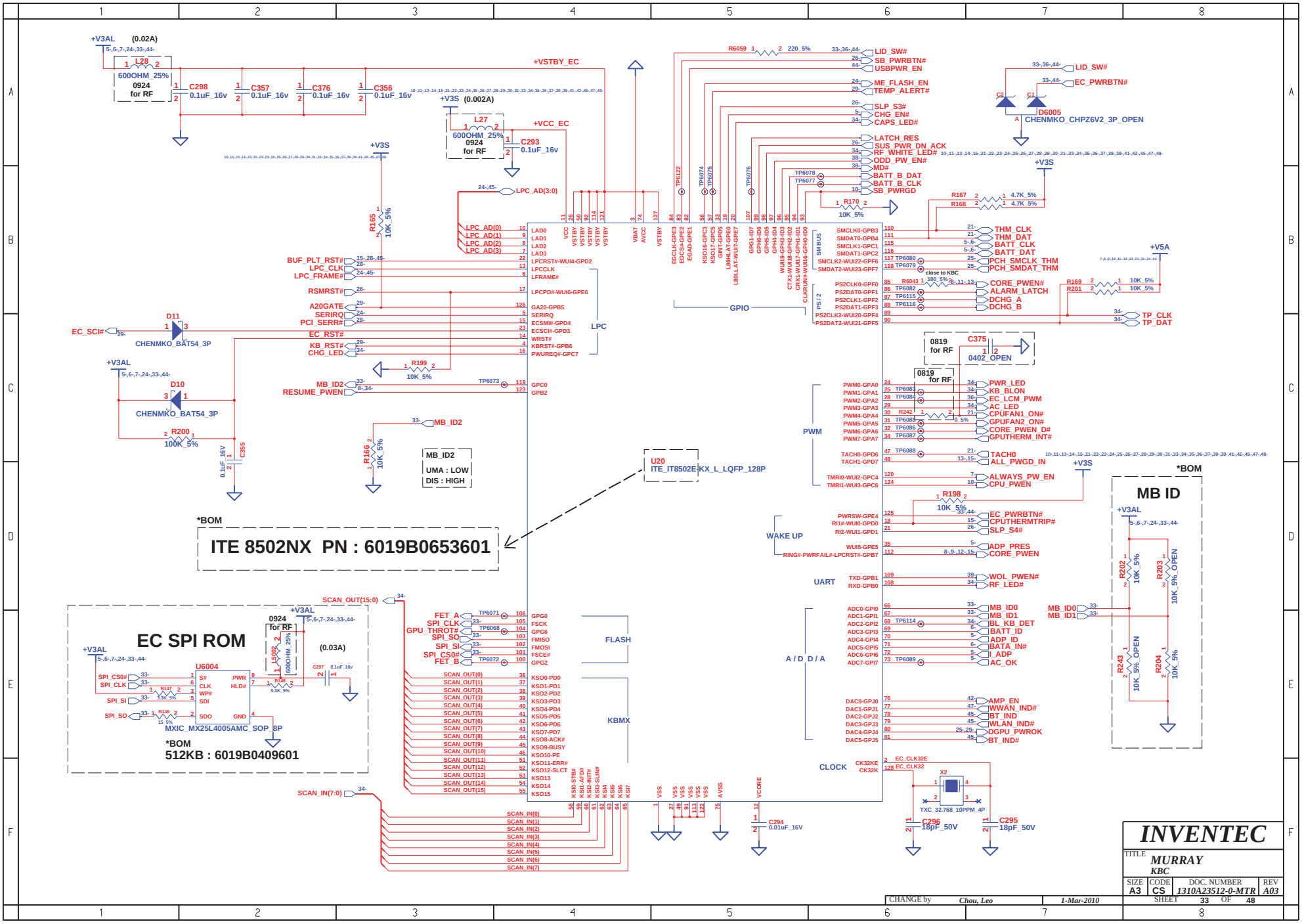
ITE 8502NX PN : 6019B0653601
U20
ITE_IT8502E-KX_L_LQFP_128P
EC SPI ROM
U6004
MXIC_MX25L4005AMC_SOP_8P
512KB : 6019B0409601
MB ID
UMA : LOW
DIS : HIGH
LPC
GPIO
PWM
WAKE UP
UART
A / D / D / A
CLOCK
FLASH
KBMX
INVENTEC
MURRAY
KBC
SIZE A3
CODE CS
DOC. NUMBER 1310A23512-0-MTR
REV A03
SHEET 33 OF 48
CHANGE by Chou, Leo
1-Mar-2010

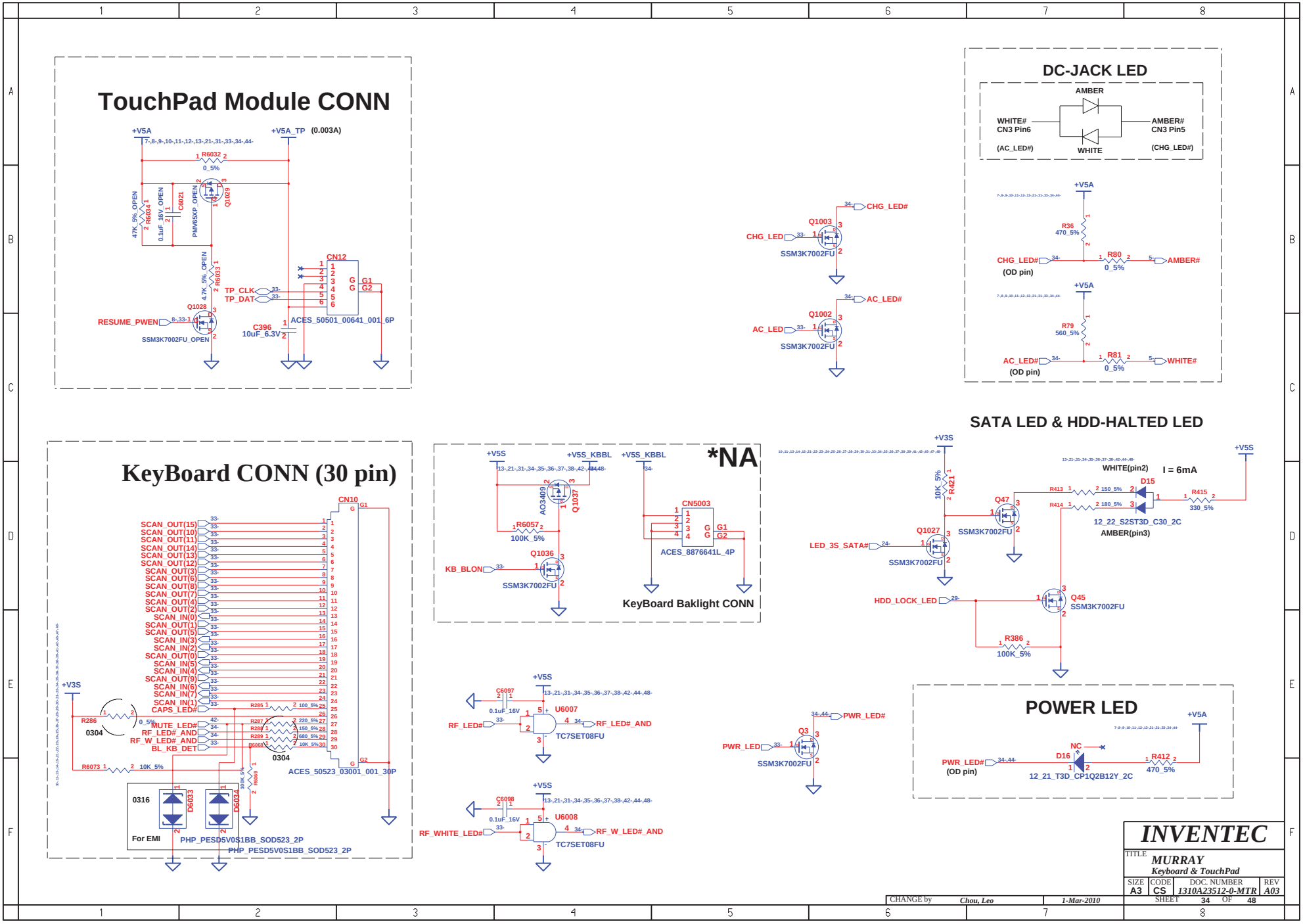
TouchPad Module CONN
+V5A
+V5A_TP (0.003A)
R6032 0_5%
Q1029
PMV65XP_OPEN
47K_5%_OPEN R6034
0.1uF_16V_OPEN C6021
4.7K_5%_OPEN R6033
Q1028
SSM3K7002FU_OPEN
RESUME_PWEN
TP_CLK
TP_DAT
CN12
ACES_50501_00641_001_6P
C396 10uF_6.3V
DC-JACK LED
AMBER
WHITE# CN3 Pin6
AMBER# CN3 Pin5
(AC_LED#)
WHITE
(CHG_LED#)
R36 470_5%
CHG_LED#
(OD pin)
R80 0_5%
AMBER#
R79 560_5%
AC_LED#
R81 0_5%
WHITE#
Q1003
CHG_LED
SSM3K7002FU
Q1002
AC_LED
KeyBoard CONN (30 pin)
CN10
ACES_50523_03001_001_30P
SCAN_OUT(15)
SCAN_OUT(10)
SCAN_OUT(11)
SCAN_OUT(14)
SCAN_OUT(13)
SCAN_OUT(12)
SCAN_OUT(3)
SCAN_OUT(6)
SCAN_OUT(8)
SCAN_OUT(7)
SCAN_OUT(4)
SCAN_OUT(2)
SCAN_IN(0)
SCAN_OUT(1)
SCAN_OUT(5)
SCAN_IN(3)
SCAN_IN(2)
SCAN_OUT(0)
SCAN_IN(5)
SCAN_IN(4)
SCAN_OUT(9)
SCAN_IN(6)
SCAN_IN(7)
SCAN_IN(1)
CAPS_LED#
MUTE_LED#
RF_LED#_AND
RF_W_LED#_AND
BL_KB_DET
+V3S
R286 0_5% 0304
R6073 10K_5%
0316
D6033
D6034
For EMI
PHP_PESD5V0S1BB_SOD523_2P
*NA
+V5S
+V5S_KBBL
AO3409
Q1037
R6057 100K_5%
Q1036
KB_BLON
CN5003
ACES_8876641L_4P
KeyBoard Baklight CONN
RF_LED#
C6097 0.1uF_16V
U6007
TC7SET08FU
RF_LED#_AND
RF_WHITE_LED#
C6098
U6008
RF_W_LED#_AND
PWR_LED#
Q3
SSM3K7002FU
SATA LED & HDD-HALTED LED
WHITE(pin2)
I = 6mA
D15
12_22_S2ST3D_C30_2C
AMBER(pin3)
R413 150_5%
R414 180_5%
R415 330_5%
Q47
Q1027
LED_3S_SATA#
R421 10K_5%
HDD_LOCK_LED
Q45
R386 100K_5%
POWER LED
NC
D16
12_21_T3D_CP1Q2B12Y_2C
R412 470_5%
INVENTEC
TITLE
MURRAY
Keyboard & TouchPad
SIZE A3
CODE CS
DOC. NUMBER 1310A23512-0-MTR
REV A03
SHEET 34 OF 48
CHANGE by Chou, Leo
1-Mar-2010

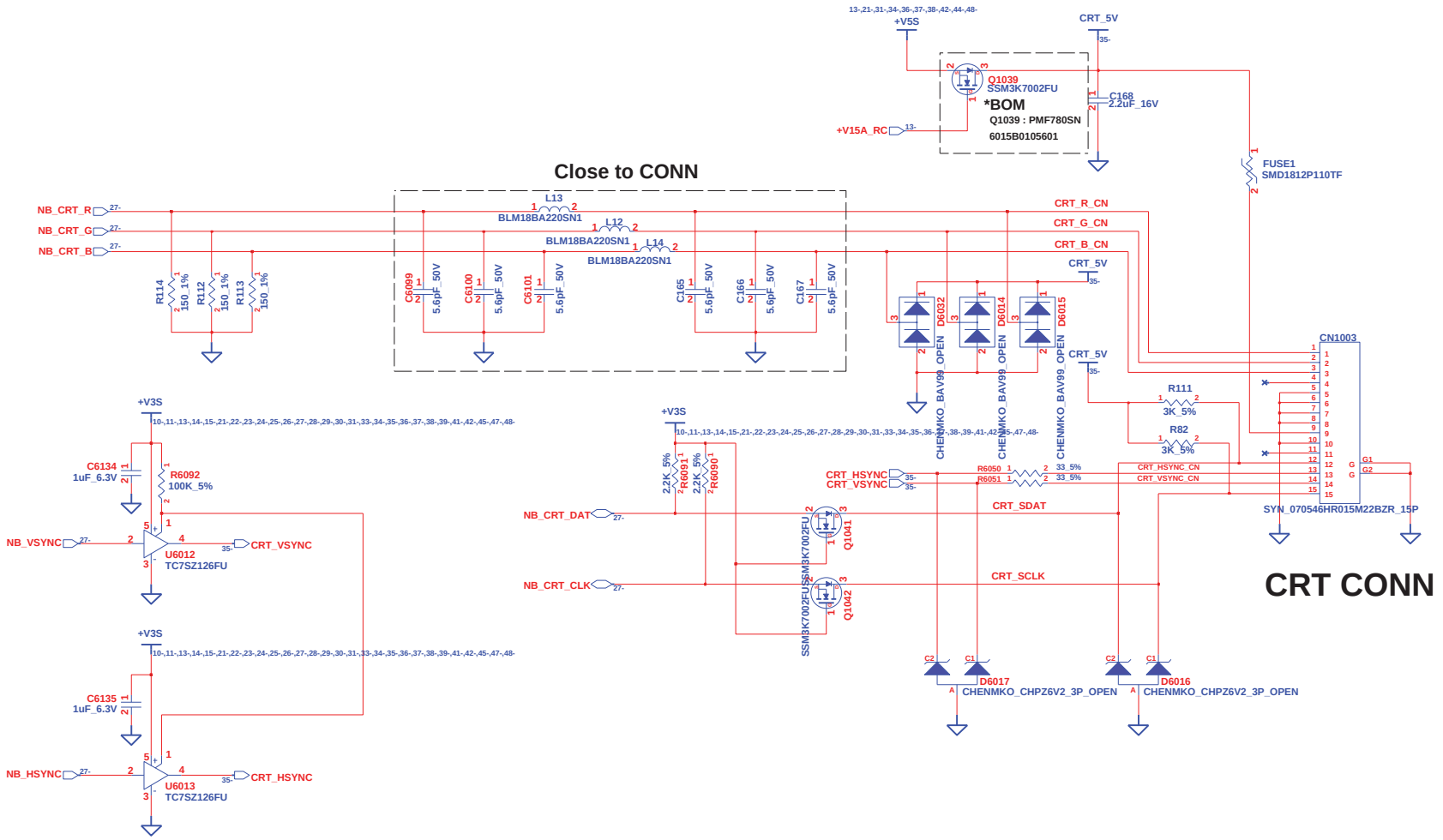

INVENTEC			
TITLE MURRAY CRT			
SIZE A3	CODE CS	DOC. NUMBER 1310A23512-0-MTR	REV A03
CHANGE by Chou, Leo	1-Mar-2010	SHEET 35 OF 48	

LCM CONN (30pin)

(6012B0348301)
*BOM

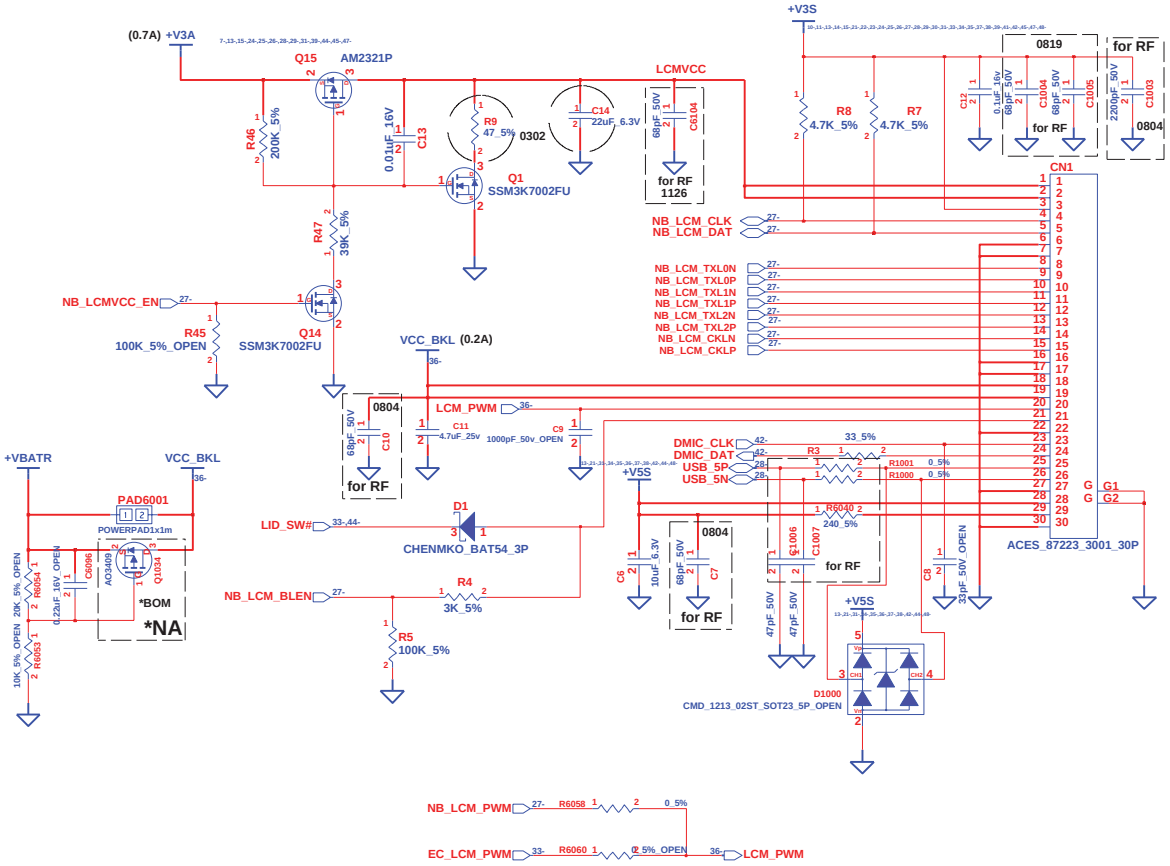

CHANGE by	Chou, Leo	1-Mar-2010	

INVENTEC

TITLE: MURRAY
LCM

SIZE	CODE	DOC. NUMBER	REV
A3	CS	1310A23512-0-MTR	A03

SHEET 36 OF 48

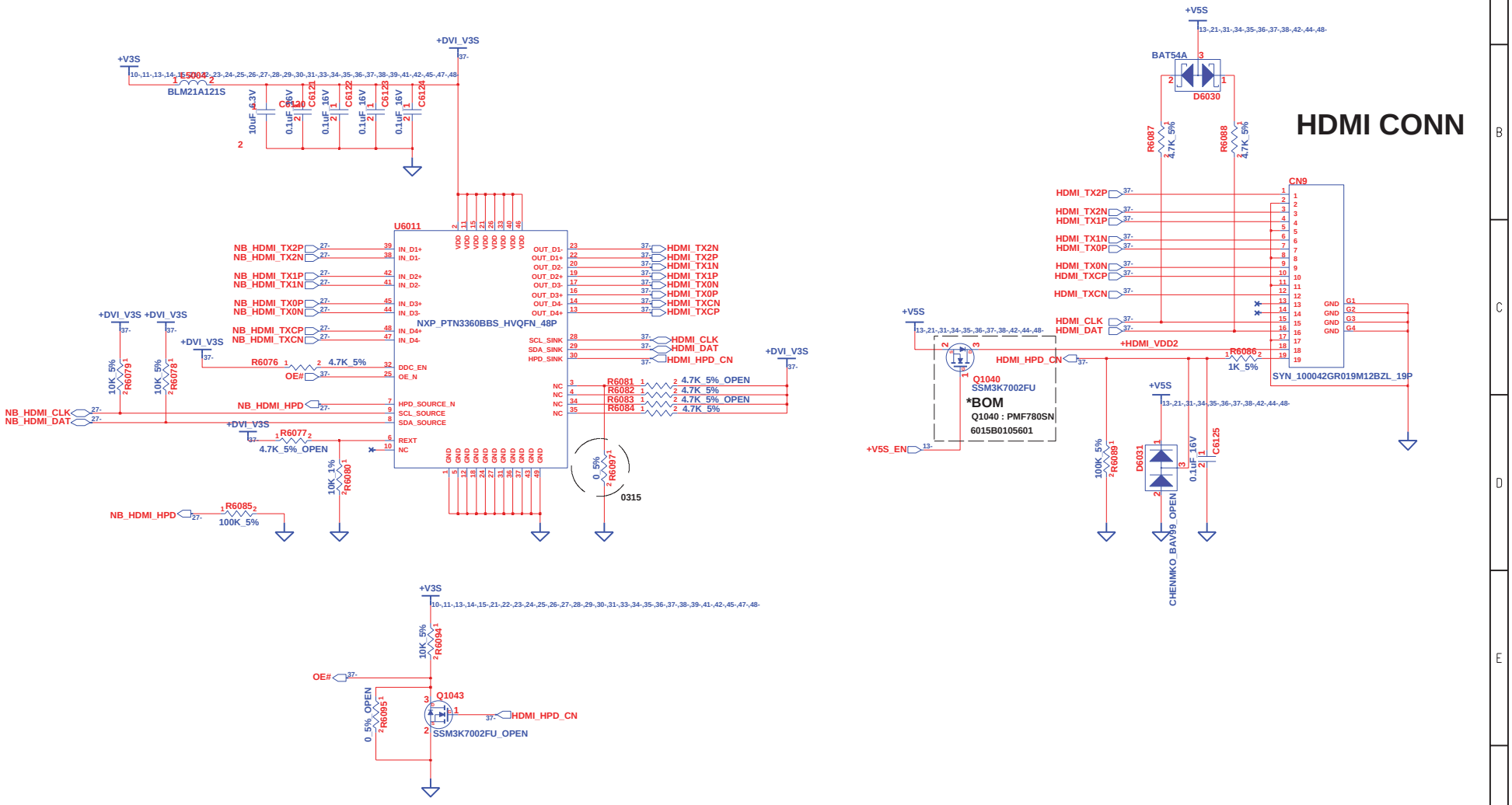

CHANGE by	Chou, Leo	1-Mar-2010	

INVENTEC

TITLE: *MURRAY*
HDMI Level-Shift

SIZE	CODE	DOC. NUMBER	REV
A3	CS	1310A23512-0-MTR	A03

SHEET 37 OF 48

SATA HDD FPC CONN on MB

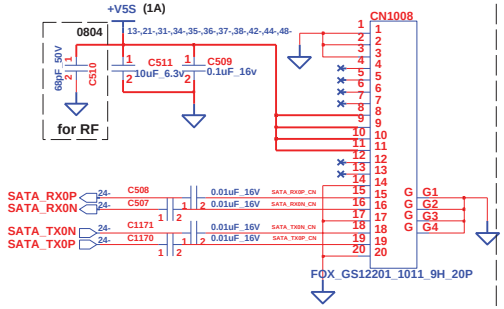

CN1008 : 6012B0238201-002

SATA ODD FPC CONN on MB

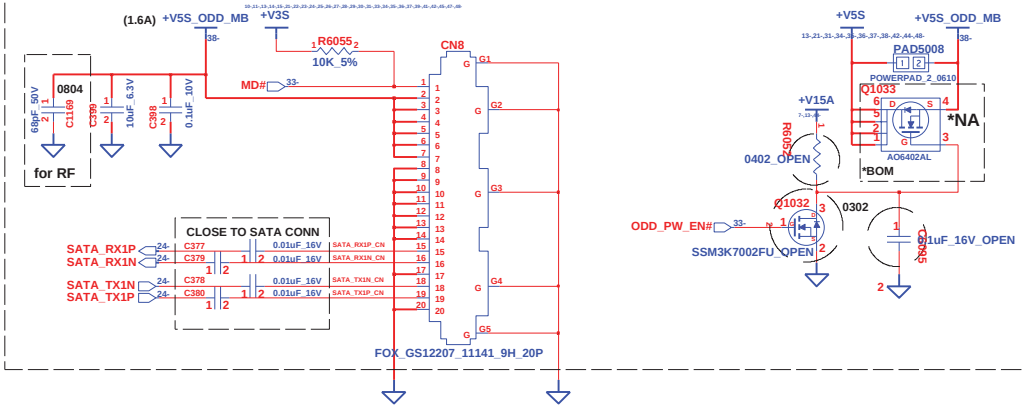

CHANGE by	Chou, Leo	1-Mar-2010	

INVENTEC

TITLE: *MURRAY*
SATA HDD & ODD

SIZE	CODE	DOC. NUMBER	REV
A3	CS	1310A23512-0-MTR	A03

SHEET 38 OF 48

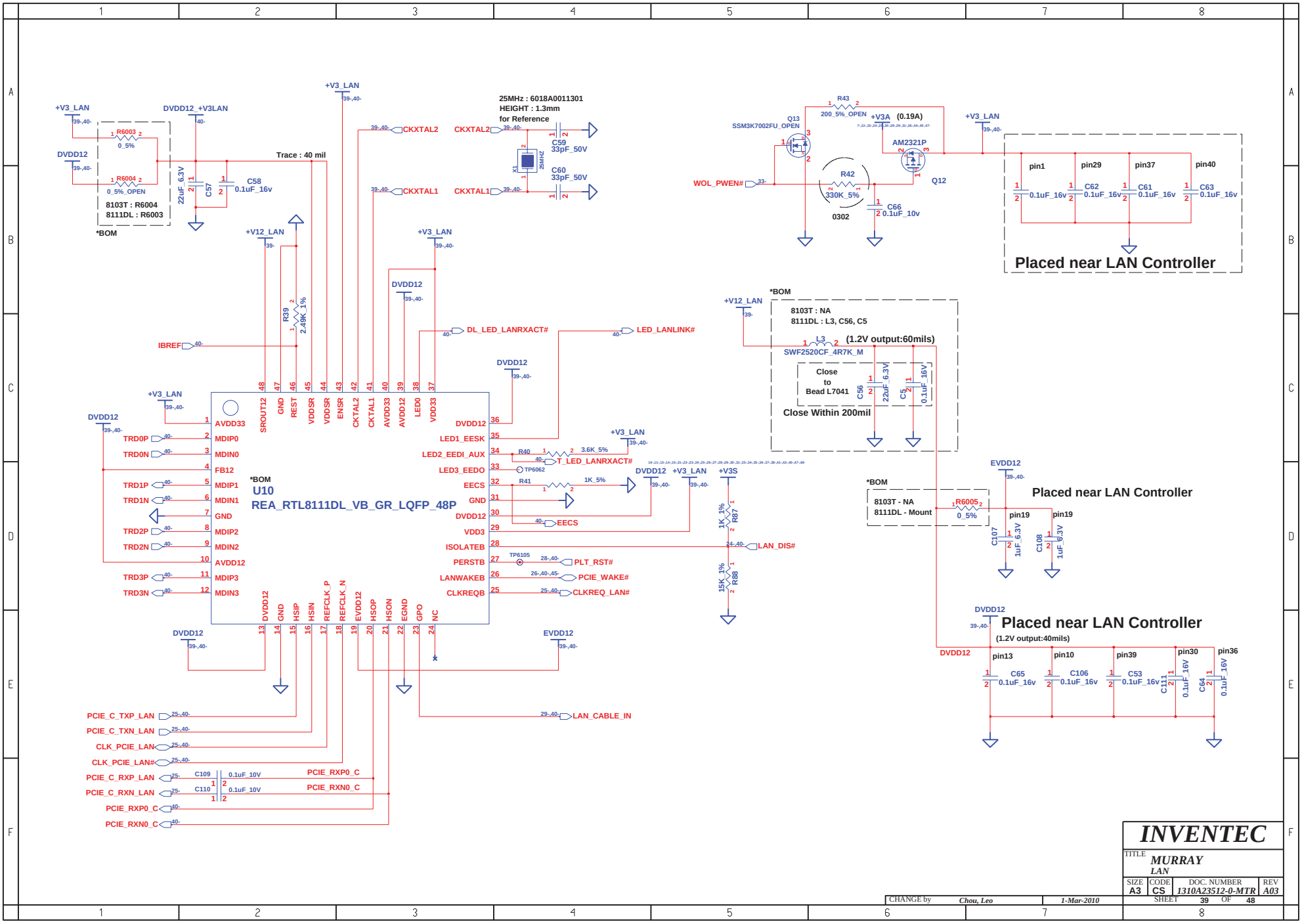
U10
REA_RTL8111DL_VB_GR_LQFP_48P
*BOM
8103T : R6004
8111DL : R6003
Trace : 40 mil
25MHz : 6018A0011301
HEIGHT : 1.3mm
for Reference
8103T : NA
8111DL : L3, C56, C5
(1.2V output:60mils)
Close to Bead L7041
Close Within 200mil
8103T - NA
8111DL - Mount
Placed near LAN Controller
(1.2V output:40mils)
INVENTEC
MURRAY
LAN
SIZE A3
CODE CS
DOC. NUMBER 1310A23512-0-MTR
REV A03
SHEET 39 OF 48
CHANGE by Chou, Leo
1-Mar-2010

LAYOUT NOTE : Place termination resistors and caps as close to LAN controller as possible

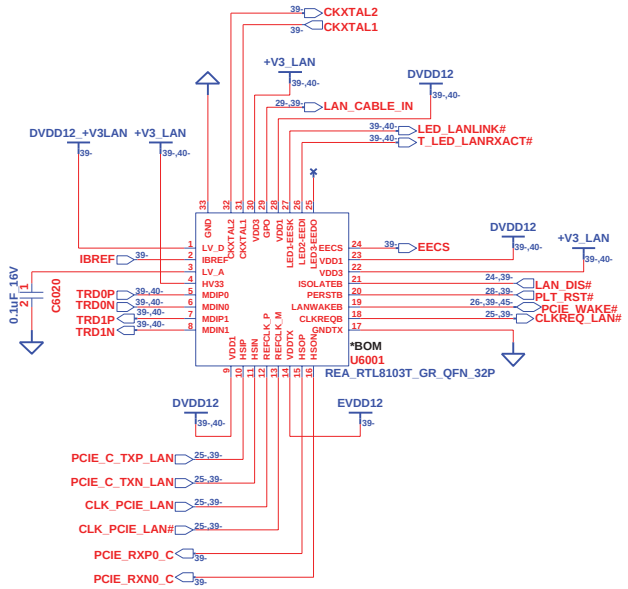

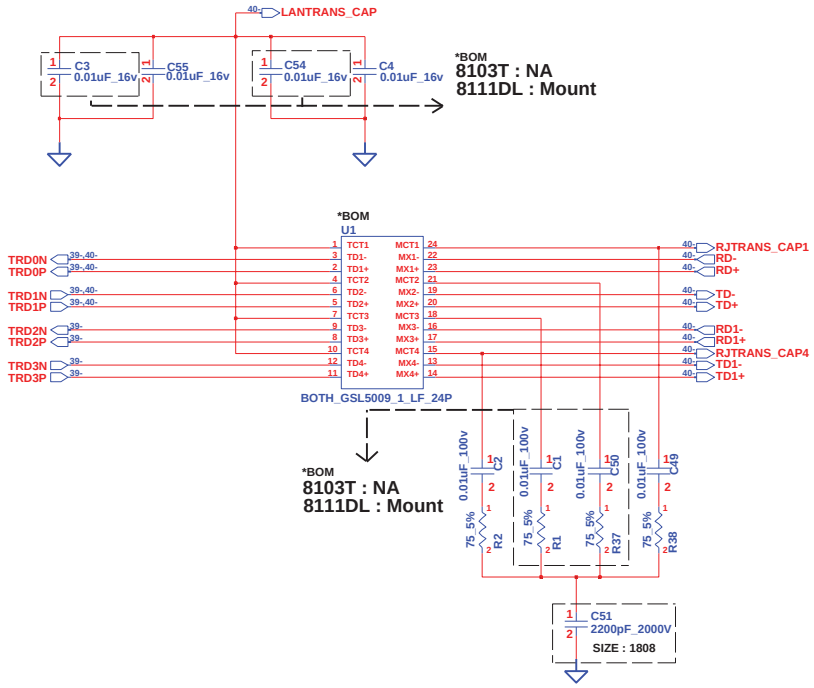

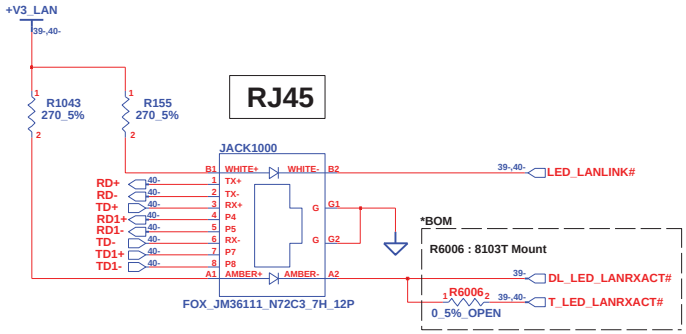

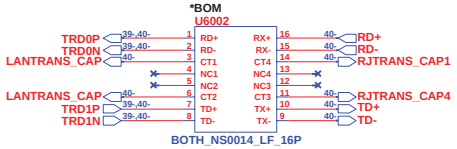

CHANGE by	Chou, Leo	1-Mar-2010	

INVENTEC

TITLE: *MURRAY*
RJ-45

SIZE	CODE	DOC. NUMBER	REV
A3	CS	1310A23512-0-MTR	A03

SHEET 40 OF 48

Card Reader CONN

*BOM
U1009 : AU6437B52-GEF-GR
6019B0723601

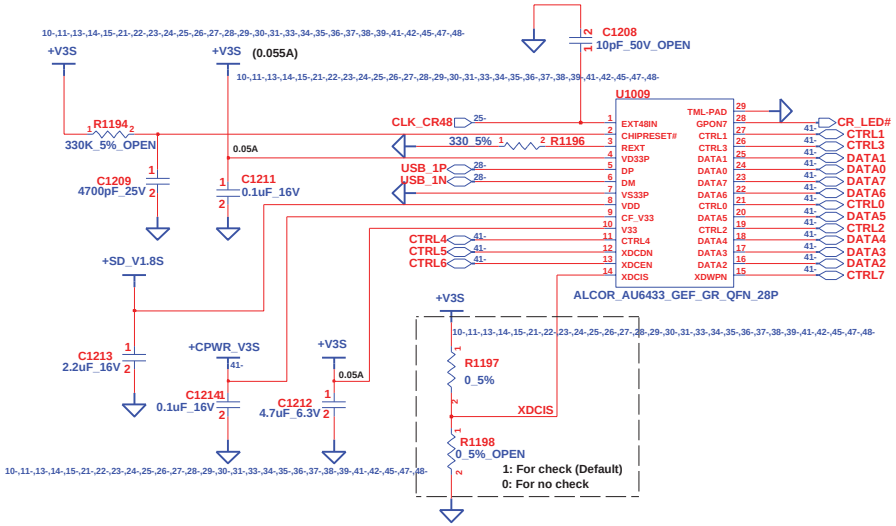

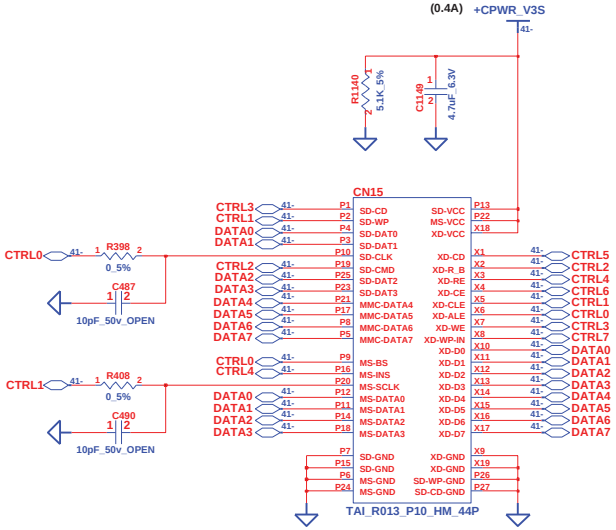

CHANGE by	Chou, Leo	1-Mar-2010	

INVENTEC

TITLE
MURRAY
Card Reader

SIZE	CODE	DOC. NUMBER	REV
A3	CS	1310A23512-0-MTR	A03

SHEET 41 OF 48

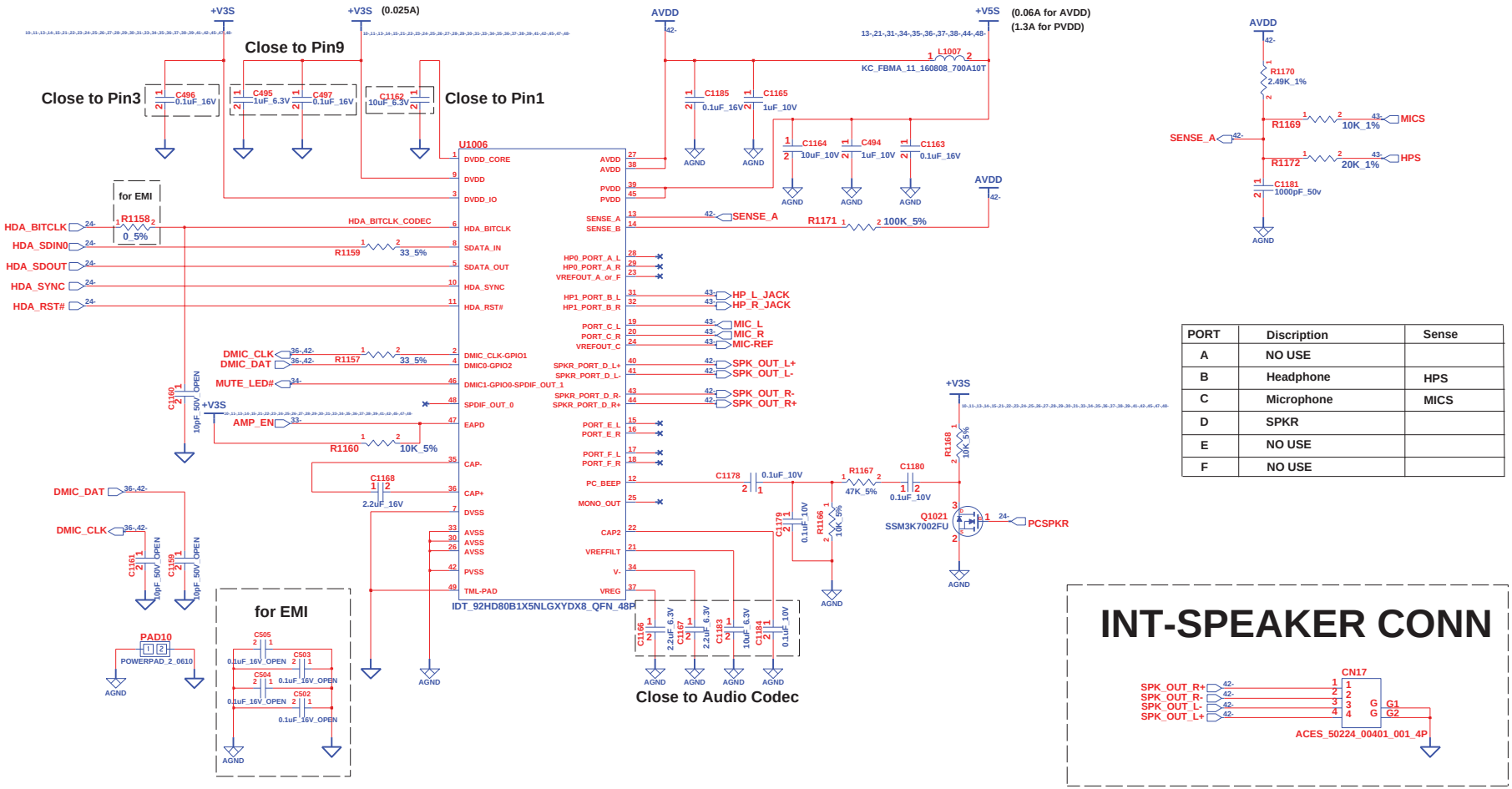

PORT	Discription	Sense
A	NO USE	
B	Headphone	HPS
C	Microphone	MICS
D	SPKR	
E	NO USE	
F	NO USE	

INVENTEC

TITLE MURRAY
Audio Codec

SIZE	CODE	DOC. NUMBER	REV
A3	CS	1310A23512-0-MTR	A03

SHEET 42 OF 48

CHANGE by Chou, Leo 1-Mar-2010

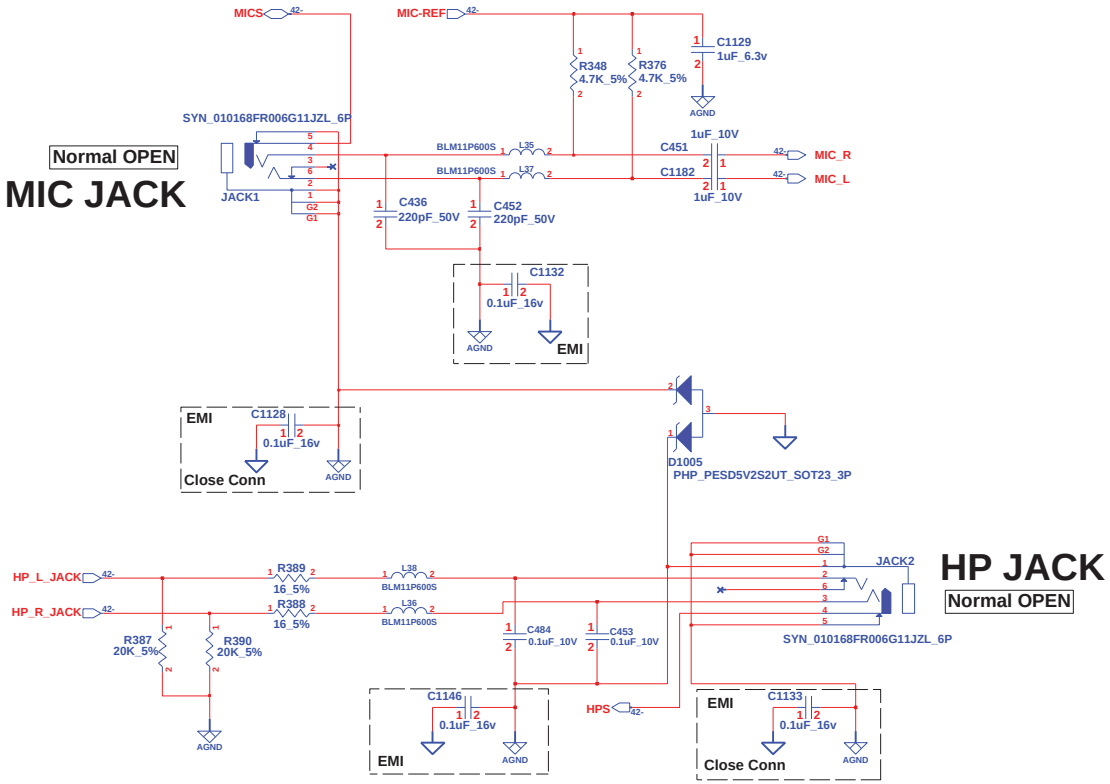

INVENTEC			
TITLE MURRAY HP JACK & MIC JACK			
SIZE A3	CODE CS	DOC. NUMBER 1310A23512-0-MTR	REV A03
CHANGE by Chou, Leo	1-Mar-2010	SHEET 43 OF 48	

BLUETOOTH CONN

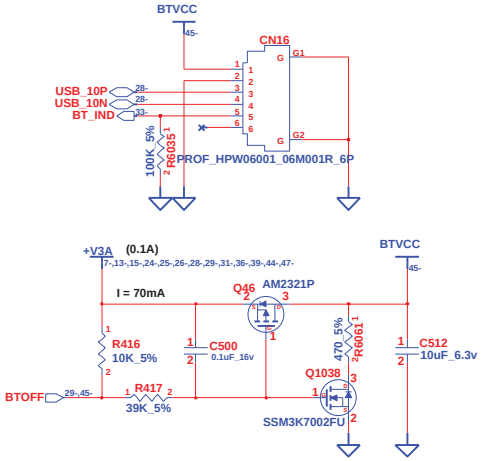

WLAN CONN (MINICARD)

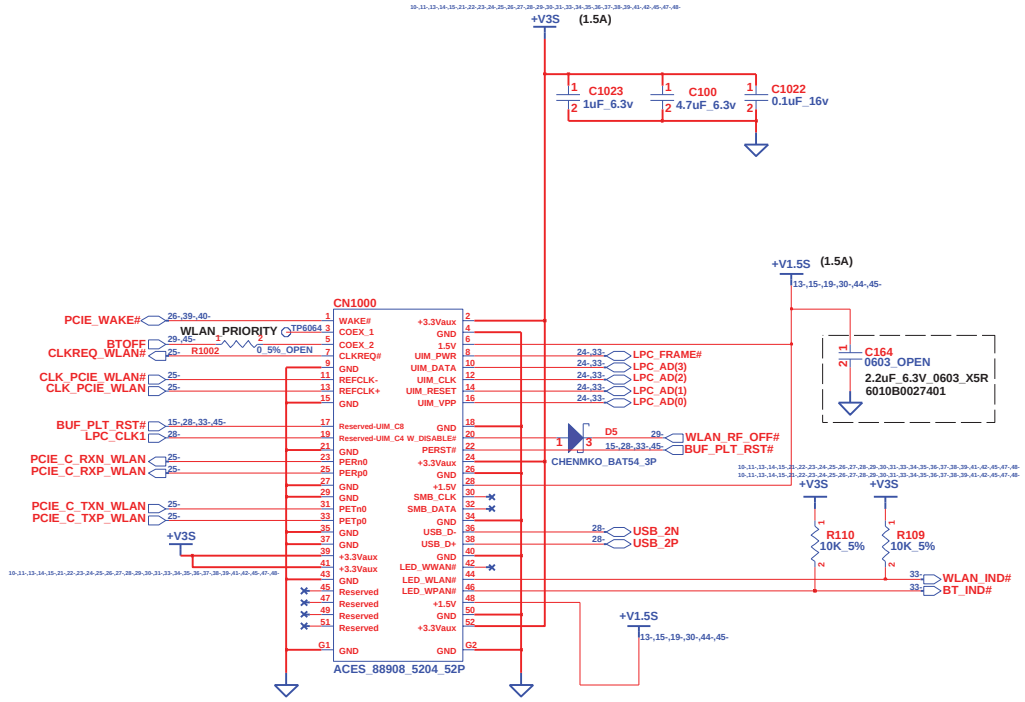

***BOM**
CN1000 : 6026B0184301

INVENTEC			
TITLE MURRAY WLAN, BT & WebCAM			
SIZE A3	CODE CS	DOC. NUMBER 1310A23512-0-MTR	REV A03
CHANGE by Chou, Leo	1-Mar-2010	SHEET 45 OF 48	

ESATA CONN
(without Re-Driver chip)

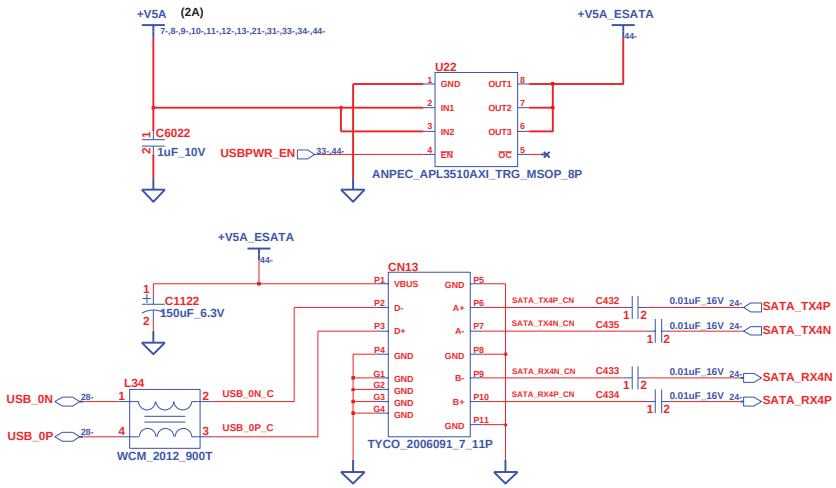

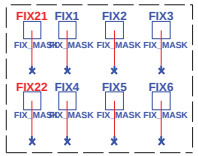

CPU's screws

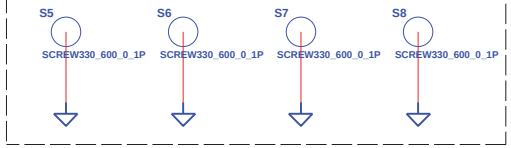

for PCH

NUT P/N :
6052B0160501
*BOM

for MB

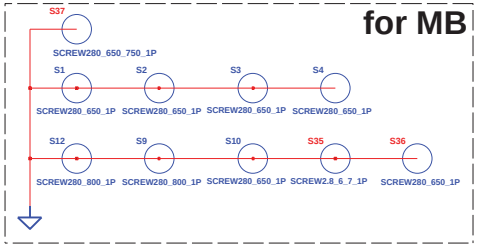

EMI CAPS

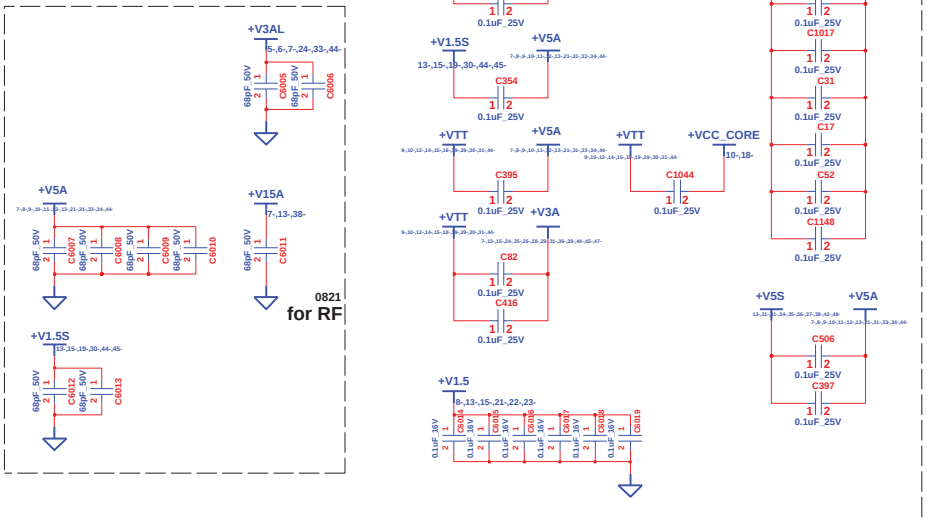

USB BOARD Cable on MB

*BOM
CN6 : 6012B0104515

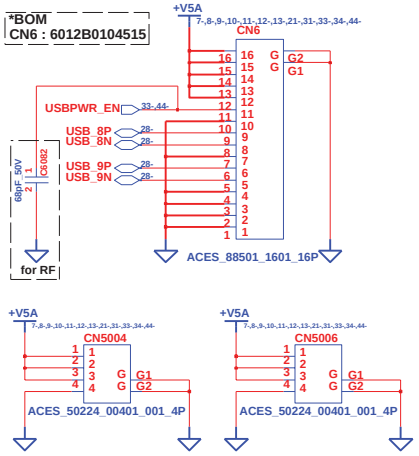

CN5004 : for 13.3" (Near SIM Card CONN)
CN5006 : for 14"

PBN Cable CN on MB

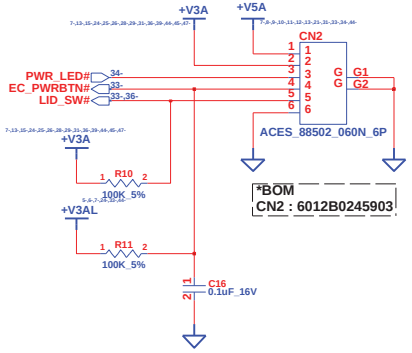

*BOM
CN2 : 6012B0245903

CHANGE by	Chou, Leo	1-Mar-2010	

INVENTEC

TITLE
MURRAY
ESATA, SCREW & LID

SIZE	CODE	DOC. NUMBER	REV
A3	CS	1310A23512-0-MTR	A03

SHEET 44 OF 48

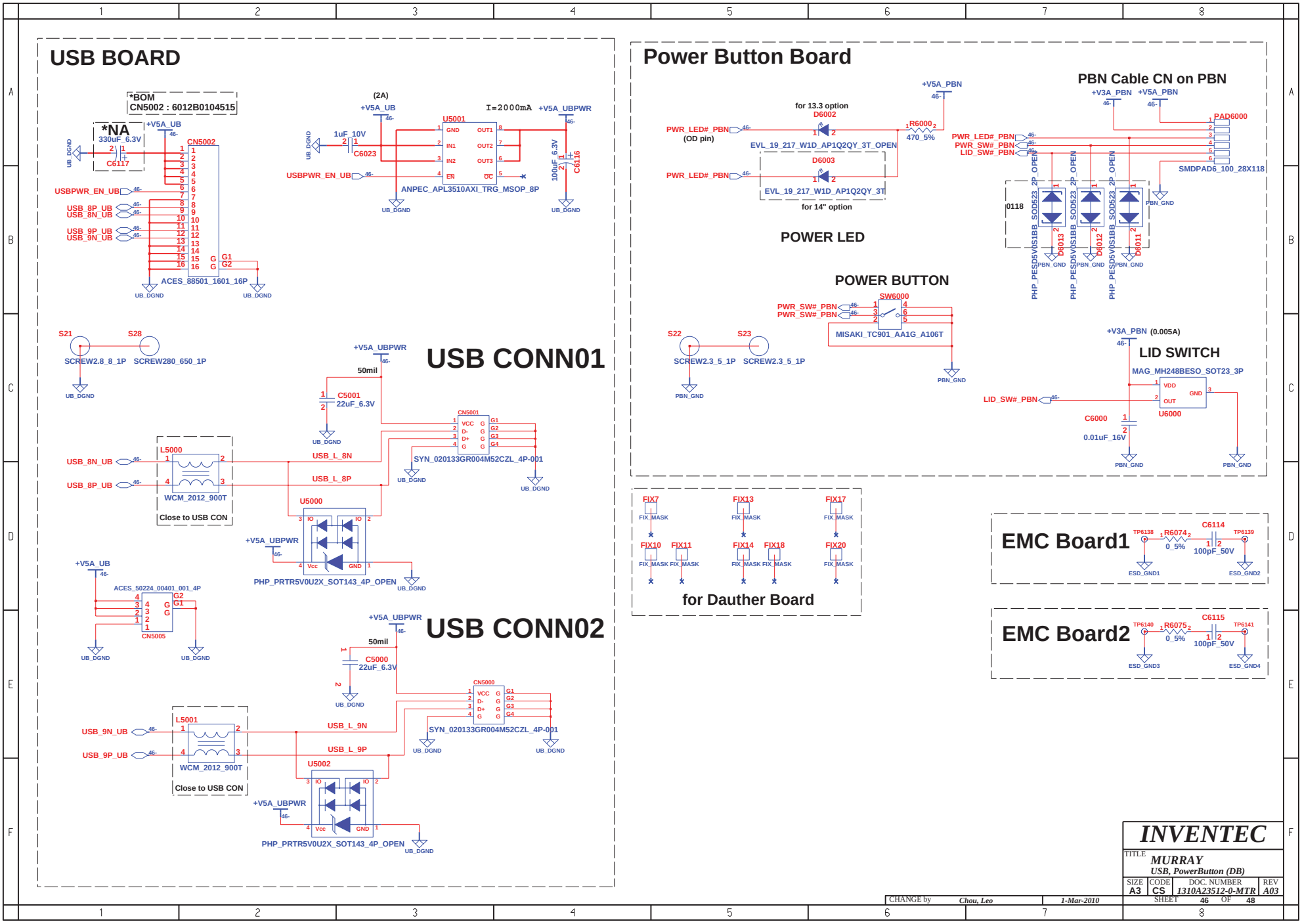
USB BOARD
*BOM
CN5002 : 6012B0104515
*NA
330uF_6.3V
C6117
+V5A_UB
CN5002
USBPWR_EN_UB
USB_8P_UB
USB_8N_UB
USB_9P_UB
USB_9N_UB
ACES_88501_1601_16P
UB_DGND
(2A)
+V5A_UB
1uF_10V
C6023
U5001
I=2000mA
+V5A_UBPWR
GND
OUT1
IN1
OUT2
IN2
OUT3
EN
OC
ANPEC_APL3510AXI_TRG_MSOP_8P
100uF_6.3V
C6116
S21
S28
SCREW2.8_8_1P
SCREW280_650_1P
USB CONN01
+V5A_UBPWR
50mil
C5001
22uF_6.3V
CN5001
VCC
D-
D+
G
SYN_020133GR004M52CZL_4P-001
L5000
USB_8N_UB
USB_8P_UB
USB_L_8N
USB_L_8P
WCM_2012_900T
Close to USB CON
U5000
PHP_PRTR5V0U2X_SOT143_4P_OPEN
ACES_50224_00401_001_4P
CN5005
USB CONN02
C5000
22uF_6.3V
CN5000
USB_L_9N
USB_L_9P
L5001
USB_9N_UB
USB_9P_UB
U5002
Power Button Board
+V5A_PBN
for 13.3 option
D6002
PWR_LED#_PBN
(OD pin)
EVL_19_217_W1D_AP1Q2QY_3T_OPEN
R6000
470_5%
D6003
EVL_19_217_W1D_AP1Q2QY_3T
for 14" option
PBN Cable CN on PBN
+V3A_PBN
PAD6000
PWR_SW#_PBN
LID_SW#_PBN
SMDPAD6_100_28X118
PHP_PES05V0S1BB_SOD523_2P_OPEN
D6013
D6012
D6011
PBN_GND
POWER LED
POWER BUTTON
SW6000
MISAKI_TC901_AA1G_A106T
S22
S23
SCREW2.3_5_1P
LID SWITCH
+V3A_PBN (0.005A)
MAG_MH248BESO_SOT23_3P
VDD
OUT
GND
U6000
C6000
0.01uF_16V
FIX7
FIX13
FIX17
FIX10
FIX11
FIX14
FIX18
FIX20
FIX_MASK
for Dauther Board
EMC Board1
TP6138
R6074
0_5%
C6114
100pF_50V
TP6139
ESD_GND1
ESD_GND2
EMC Board2
TP6140
R6075
C6115
TP6141
ESD_GND3
ESD_GND4
INVENTEC
TITLE
MURRAY
USB, PowerButton (DB)
SIZE A3
CODE CS
DOC. NUMBER 1310A23512-0-MTR
REV A03
SHEET 46 OF 48
CHANGE by Chou, Leo
1-Mar-2010

OPTION PART

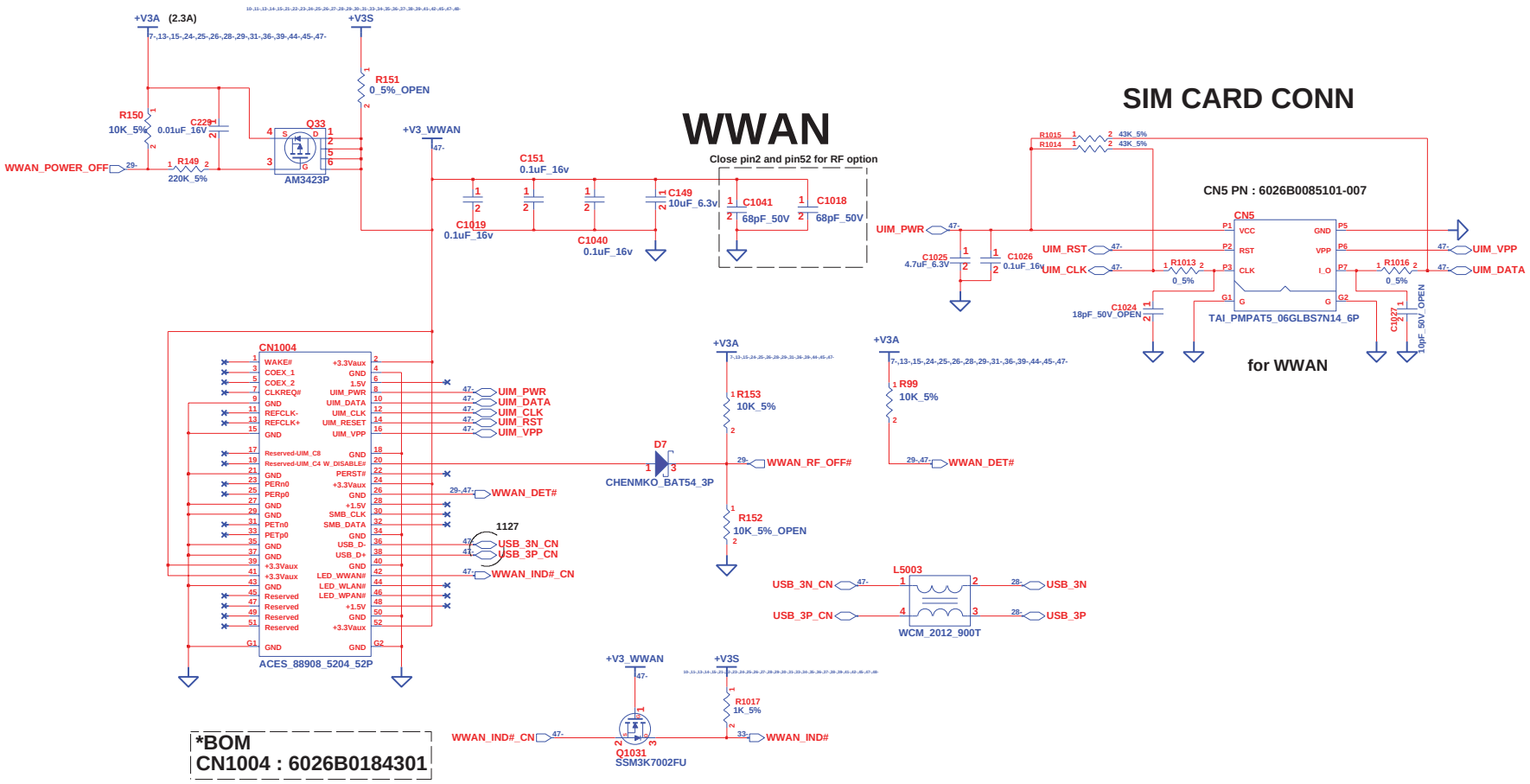

INVENTEC			
TITLE MURRAY WWAN(Option)			
SIZE A3	CODE CS	DOC. NUMBER 1310A23512-0-MTR	REV A03
CHANGE by Chou, Leo	1-Mar-2010	SHEET 47 OF 48	

OPTION PART

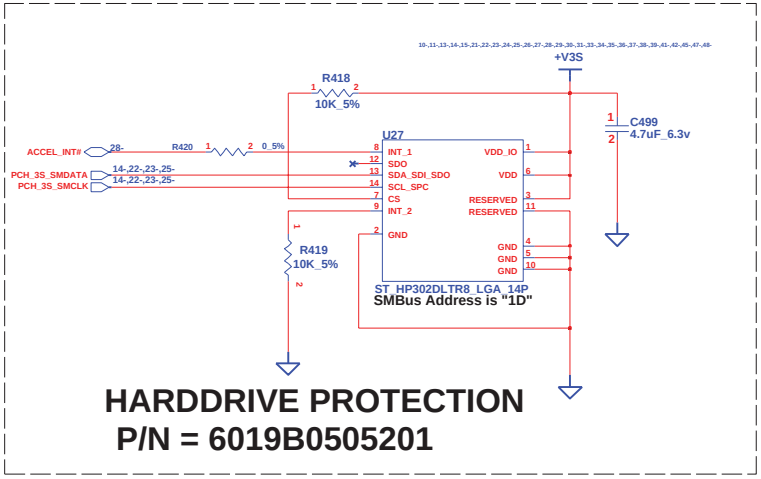

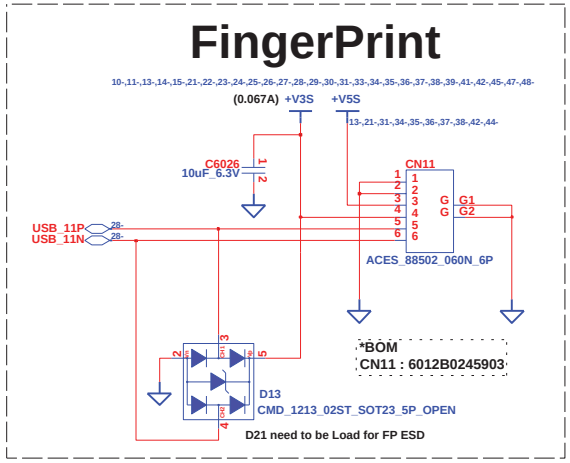

INVENTEC			
TITLE MURRAY Touchscreen, FP & HD LOCK(Option)			
SIZE A3	CODE CS	DOC. NUMBER 1310A23512-0-MTR	REV A03
CHANGE by Chou, Leo	1-Mar-2010	SHEET 48 OF 48	