M11z Design

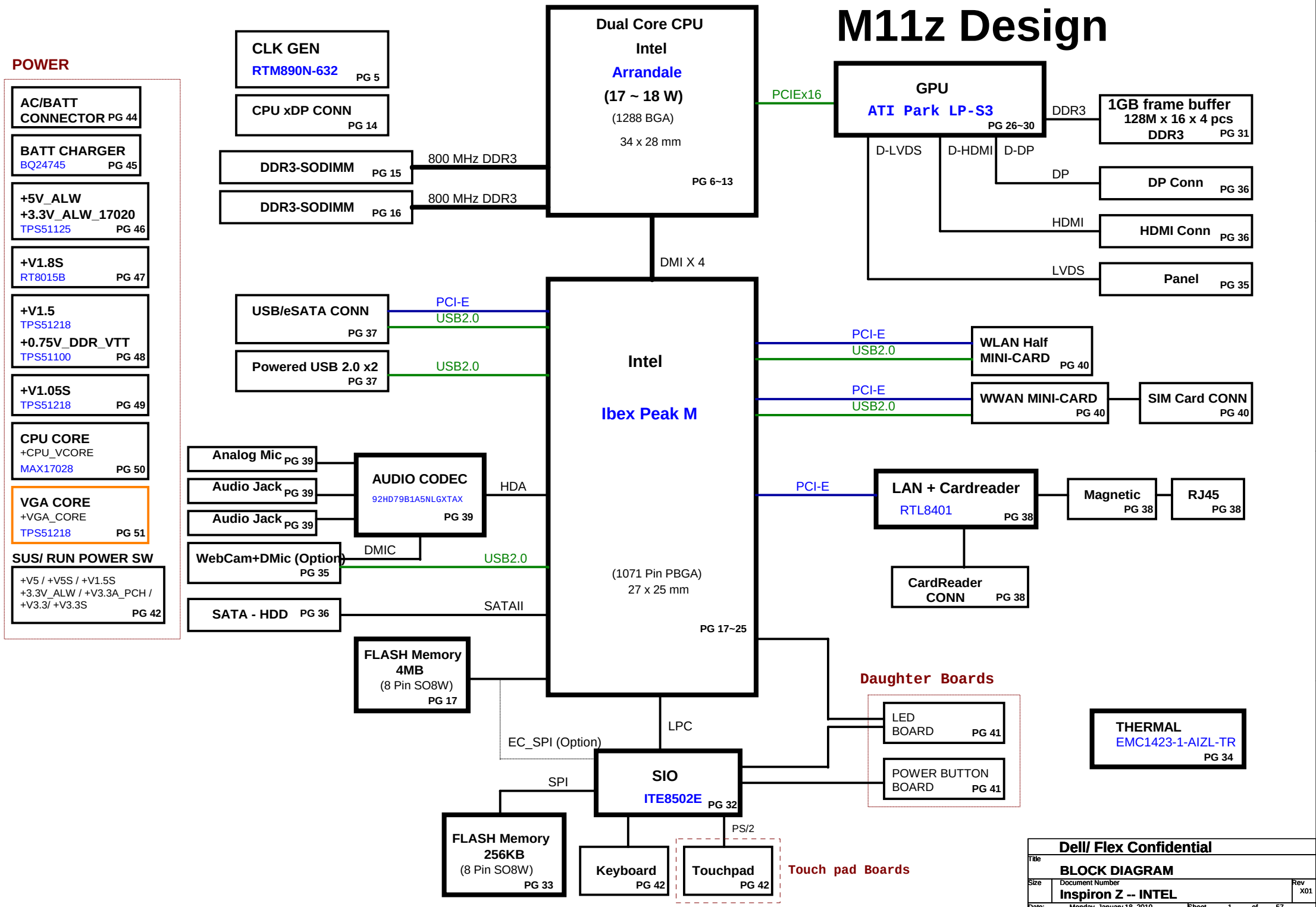

Dell/ Flex Confidential	
Title	BLOCK DIAGRAM
Size	Document Number: Inspiron Z -- INTEL
Rev	X01
Date: Monday, January 18, 2010	Sheet 1 of 57

INDEX

Page#	Description	Page#	Description
1	BLOCK DIAGRAM	45	PWR - CHARGER_BQ24745
2	Front Page	46	PWR - 5V/3V_MAX17020ETJ+
3	CLOCK MAP	47	PWR - +V1.8S_RT8015B
4	POWER SEQUENCING	48	PWR - +V1.5 / +0.75VS
5	CLOCK GEN (RTM890N-632)	49	PWR - +V1.05S_TPS51218
6-13	CPU Arrandale	50	PWR - CPU VCORE_MAX17028
14	XDP_PROCESSOR	51	PWR - +VGA_CORE/+V1S_VGA
15-16	DDRIII SO-DIMM(204P)	52	SCREW / PAD
17-25	PCH	53	Power Block Diagram
26-30	VGA ATI Park LP	54	PCI Reset Map
31	VRAM 128Mx16	55	KBC Power Up Sequence
32	KBC - ITE8502E	56	SMBus Map
33	RTC BAT/ EC_ROM		
34	THRM_EMC1423-1		
35	LVDS / WEBCAM		
36	HDMI / DP		
37	HDD / USB / eSATA		
38	LAN/ Media_RTL8401		
39	AUDIO_92HD75B2X5NLGXYB		
40	WLAN / WWAN		
41	BT / KB / TP / LED / SW		
42	RUN POWER_SW		
43	PWRGD / RESET CIRCUIT		
44	PWR - DCIN_BAT		

Power States

Power Rail	Control Signal	S0	S3	S4	S5	G3	S4/ M-off	S5/ M-off
+RTC_CELL	RTC	V	V	V	V	V		
+PWR_SRC	N/A	V	V	V	V			
+15V_ALW	5V_ALW_ON	V	V	V	V			
+5V_ALW	+5V_EN1/5V_ALW_ON	V	V	V	V			
+V5_LDO	+PWR_SRC	V	V	V	V			
+V3.3A	+3.3V_EN2/5V_ALW_ON	V	V	V	V			
+V3.3A_PCH	3VA_PCH_ON	V	V	V	V			
+V5	SUS_ON#	V	V					
+USB_RIGHT_PWR	USB_EN0#	V	V					
+USB_LEFT_PWR	USB_EN1#	V	V					
+V3.3	SUS_ON#	V	V					
+V1.5	SUS_ON	V	V					
+V1.5_DDR	SUS_ON#	V	V					
+V5S	RUN_ON	V						
+V3.3S	RUN_ON#	V						
+LCDVCC	LCD_DIGON_GFX	V						
+V1.8S	RUN_ON	V						
+V1.5S_VGA	RUN_ON#	V						
+V1.5S	RUN_ON#	V						
+V1.05S_VTT	RUN_ON	V						
+V1.05S	RUN_ON	V						
+V1S_VGA	RUN_ON	V						
+CPU_VCORE	IMVP_VR_ON	V						
+VGA_CORE	RUN_ON	V						
+0.75V_DDR_VTT	RUN_ON	V						

PROPRIETARY NOTE: THIS SHEET OF ENGINEERING DRAWING AND SPECIFICATIONS CONTAINS CONFIDENTIAL TRADE SECRET AND OTHER PROPRIETARY INFORMATION OF DELL INC. ("DELL") THIS DOCUMENT MAY NOT BE TRANSFERRED OR COPIED WITHOUT THE EXPRESS WRITTEN AUTHORIZATION OF DELL. IN ADDITION, NEITHER THIS SHEET NOR THE INFORMATION IT CONTAINS MAY BE USED BY OR DISCLOSED TO ANY THIRD PARTY WITHOUT DELL'S EXPRESS WRITTEN CONSENT.

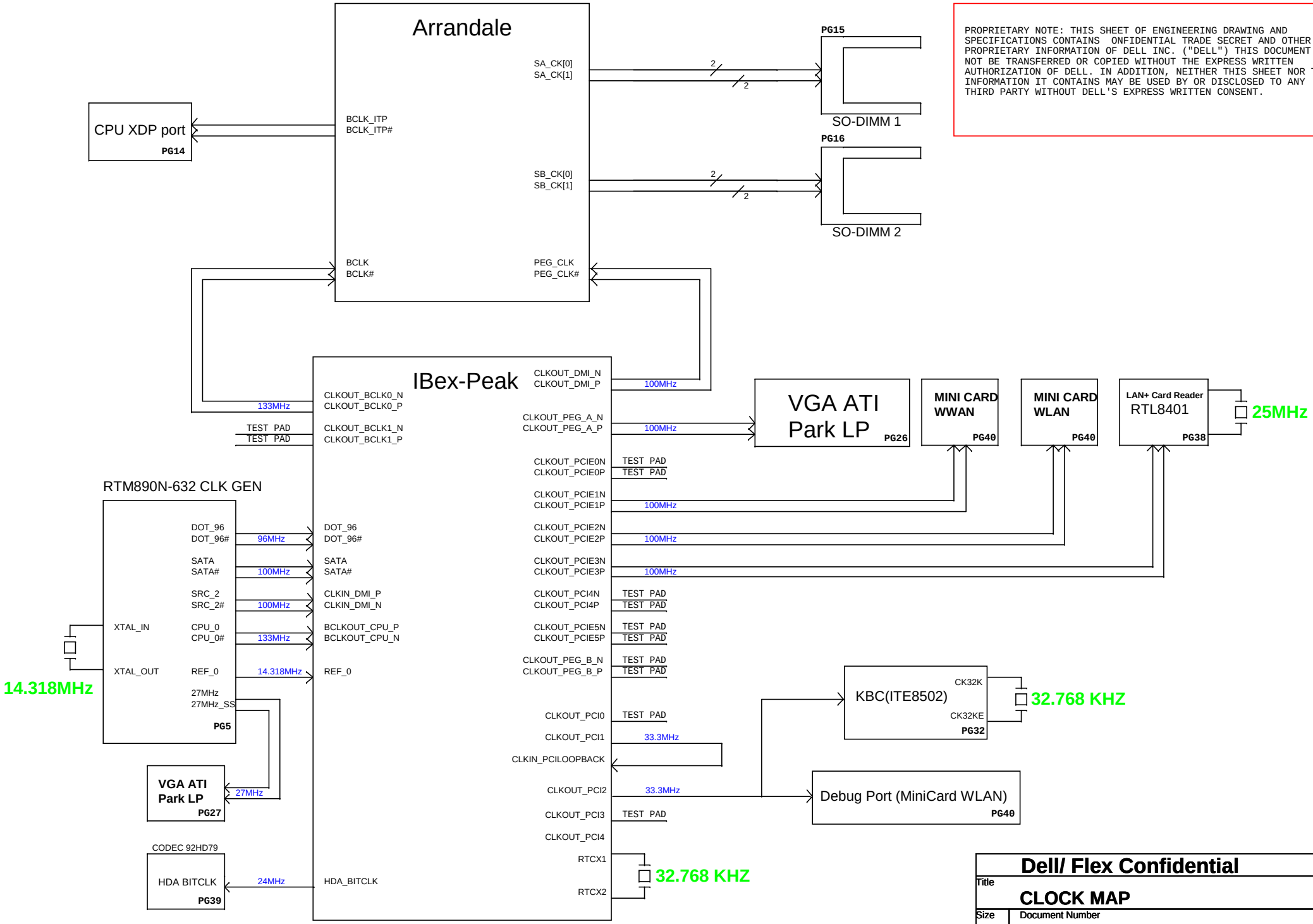

PROPRIETARY NOTE: THIS SHEET OF ENGINEERING DRAWING AND SPECIFICATIONS CONTAINS ONFIDENTIAL TRADE SECRET AND OTHER PROPRIETARY INFORMATION OF DELL INC. ("DELL") THIS DOCUMENT MAY NOT BE TRANSFERRED OR COPIED WITHOUT THE EXPRESS WRITTEN AUTHORIZATION OF DELL. IN ADDITION, NEITHER THIS SHEET NOR THE INFORMATION IT CONTAINS MAY BE USED BY OR DISCLOSED TO ANY THIRD PARTY WITHOUT DELL'S EXPRESS WRITTEN CONSENT.

Dell/ Flex Confidential

Title: **CLOCK MAP**

Size | Document Number: **Inspiron Z -- INTEL** | Rev: X01

Date: Monday, January 18, 2010 | Sheet 3 of 57

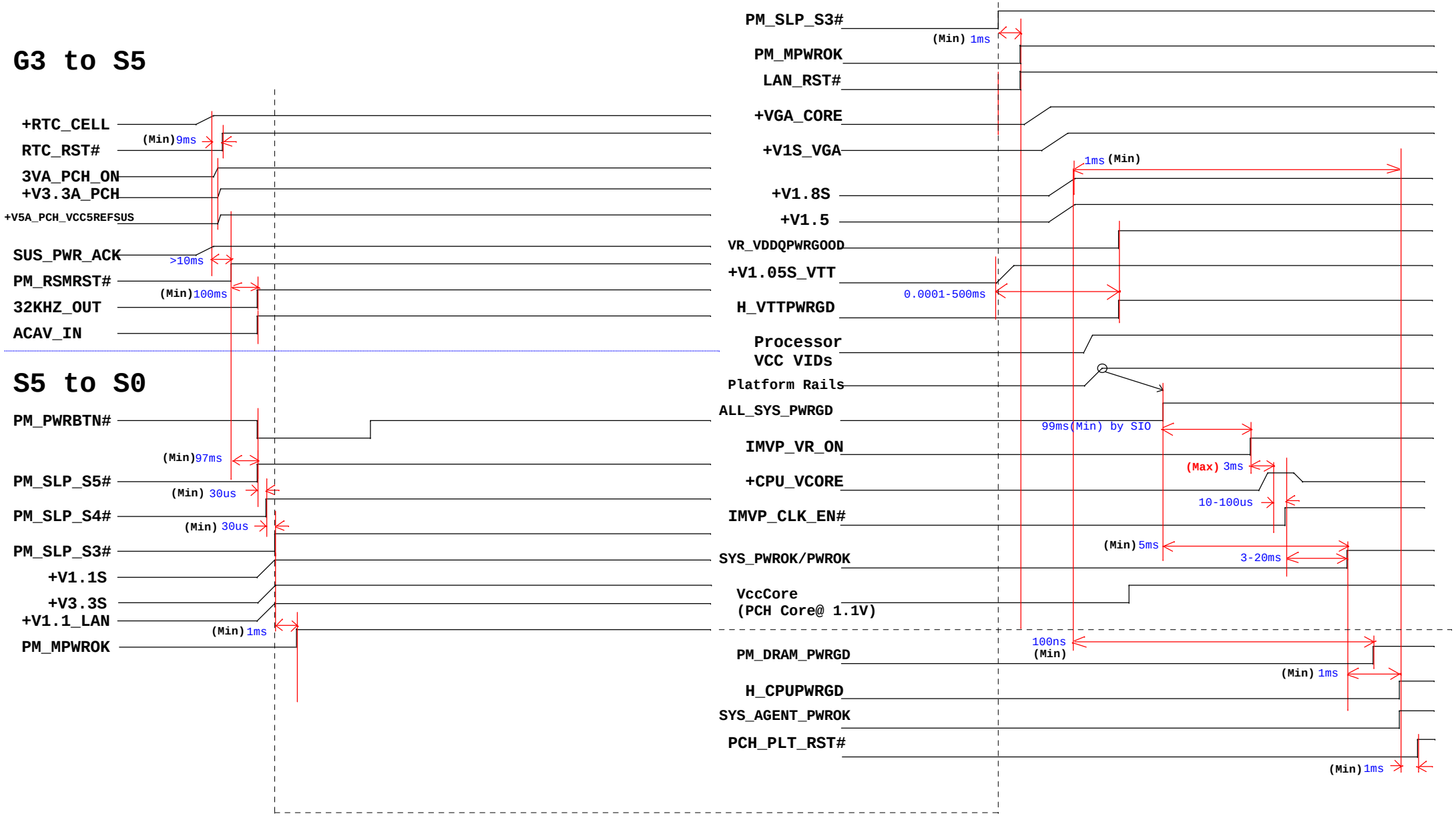

Dell/ Flex Confidential		
Title: POWER SEQUENCING		
Size	Document Number: Inspiron Z -- INTEL	Rev X01
Date: Monday, January 18, 2010	Sheet 4 of 57	

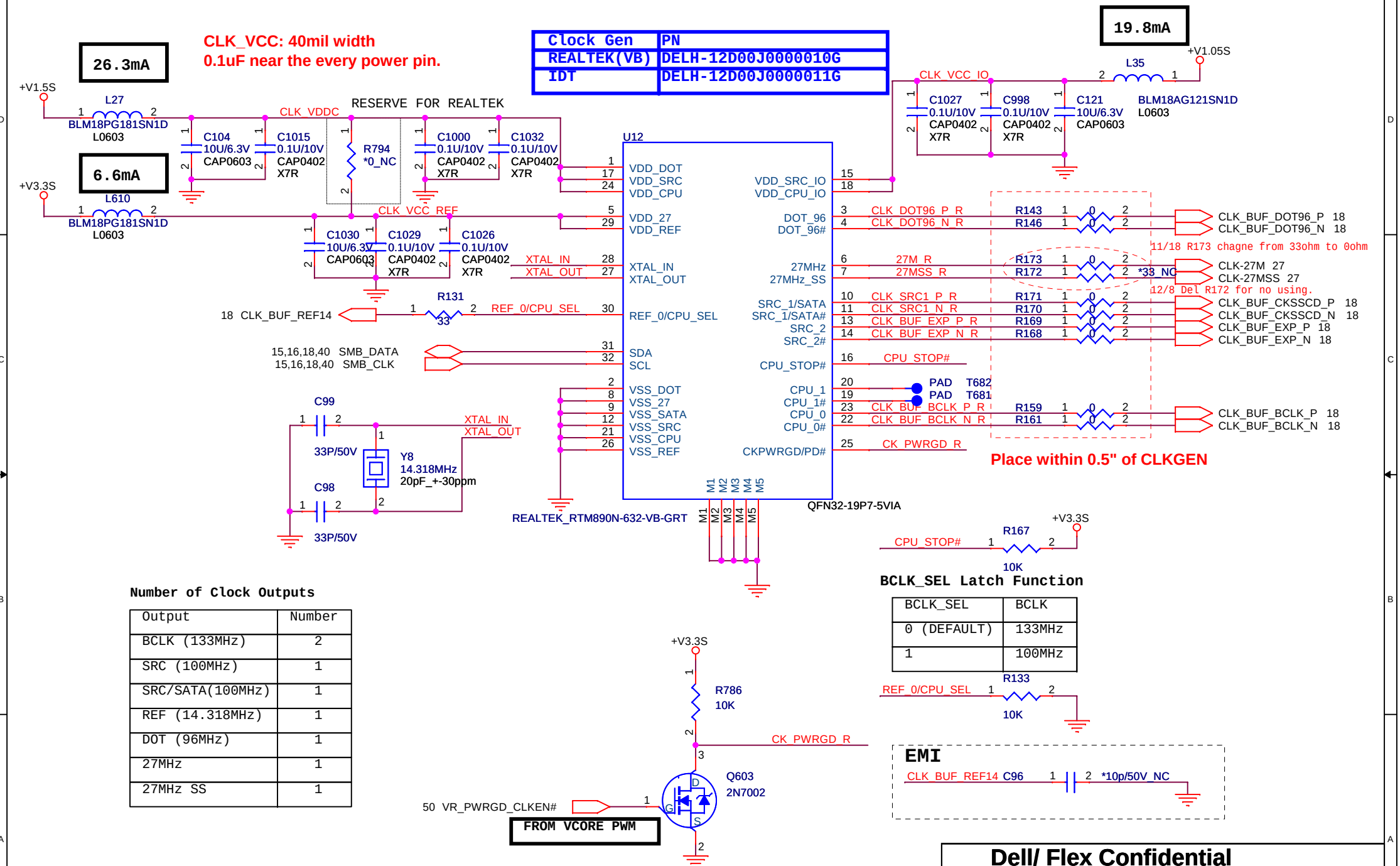

Number of Clock Outputs

Output	Number
BCLK (133MHz)	2
SRC (100MHz)	1
SRC/SATA(100MHz)	1
REF (14.318MHz)	1
DOT (96MHz)	1
27MHz	1
27MHz SS	1

BCLK_SEL	BCLK
0 (DEFAULT)	133MHz
1	100MHz

Dell/ Flex Confidential

Title: **CLOCK GEN_RTM890N-632-GRT**

Size | Document Number: **Inspiron Z -- INTEL** | Rev: X01

Date: Monday, January 18, 2010 | Sheet 5 of 57

ARRANDALE PROCESSOR (DMI, PEG, FDI)

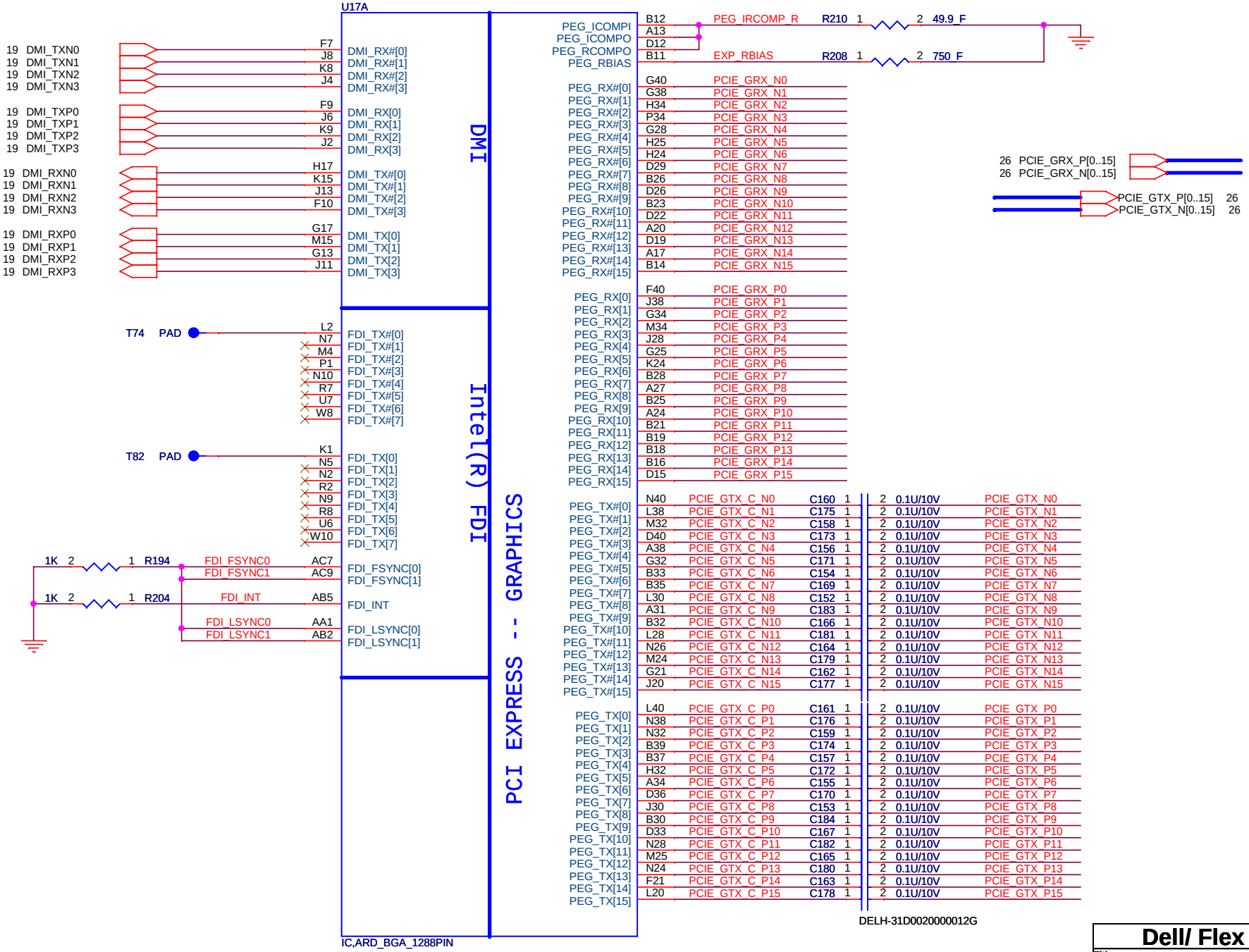

Dell/ Flex Confidential		
Title: CPU_DMI/ PEG/ FDI		
Size	Document Number: Inspiron Z -- INTEL	Rev: X01
Date: Monday, January 18, 2010	Sheet 6 of 57	

ARRANDALE PROCESSOR (CLK, MISC, JTAG)

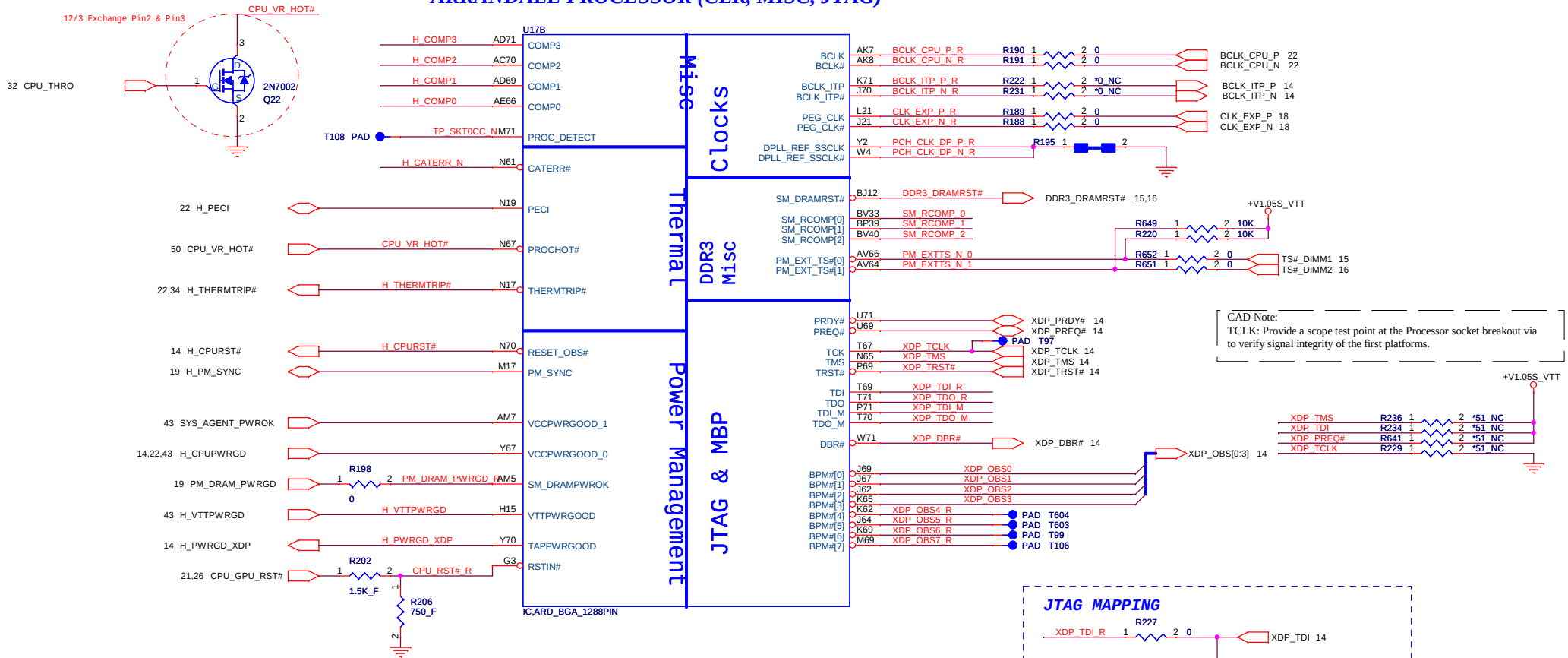

Dell/ Flex Confidential

Title: CPU_CLK/ MISC		
Size	Document Number: Inspiron Z -- INTEL	Rev X01
Date: Monday, January 18, 2010	Sheet 7 of 57	

ARRANDALE PROCESSOR (DDR3)

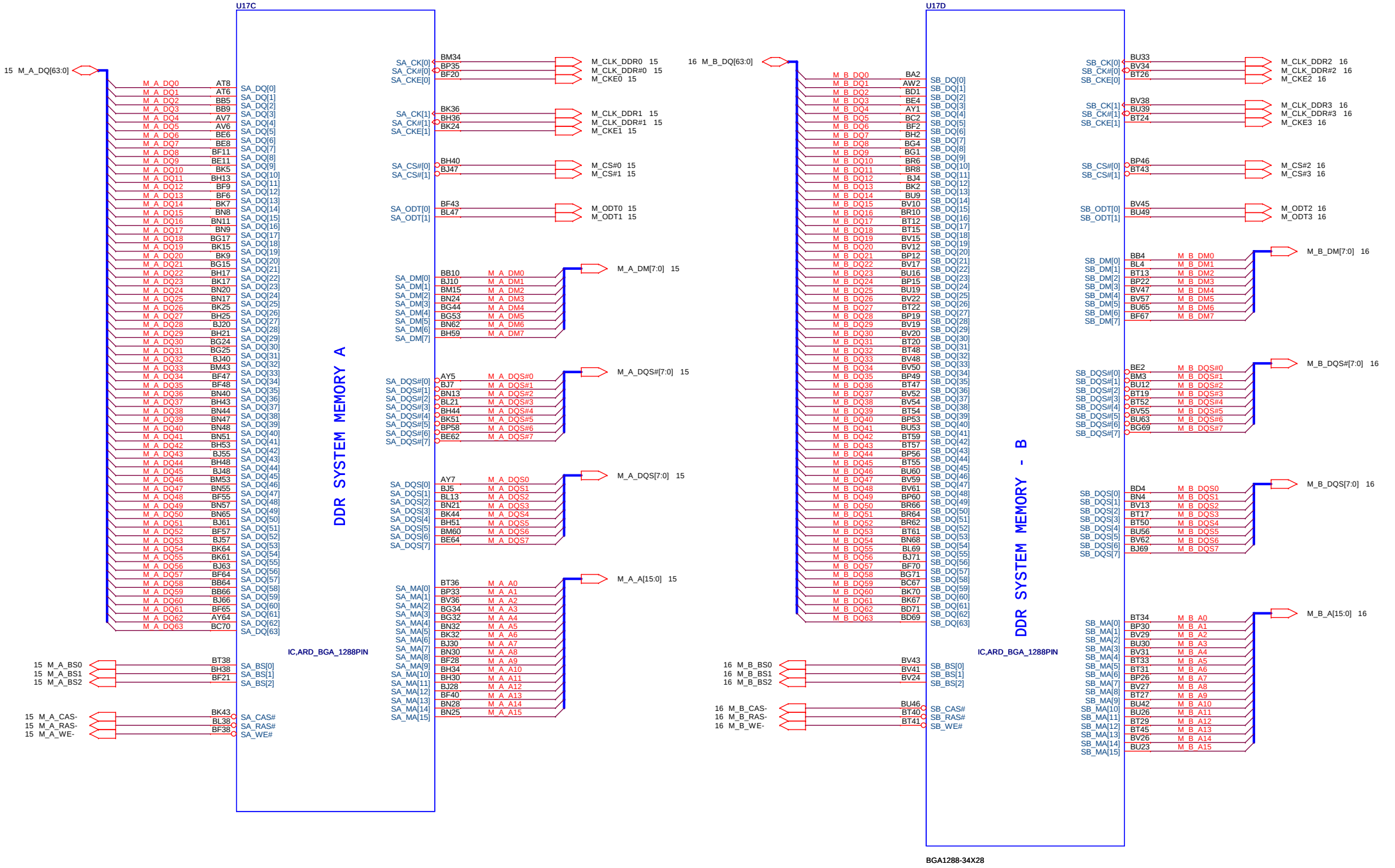

Dell/ Flex Confidential			
Title	**CPU_DDR3**		
Size	Document Number **Inspiron Z -- INTEL**		Rev X01
Date: Monday, January 18, 2010	Sheet 8 of 57		

ARRANDALE PROCESSOR (POWER-VTT)

Arrandale VTT=1.05V

MAX 16A

+V1.05S_VTT — 10K 2 — 1 R232 DPRSLPVR

U17F

T98 PAD — PSI# — F68 PSI#

50 VID0 — A61 VID[0]
50 VID1 — D61 VID[1]
50 VID2 — D62 VID[2]
50 VID3 — A62 VID[3]
50 VID4 — B63 VID[4]
50 VID5 — D64 VID[5]
50 VID6 — D66 VID[6]

T76 PAD — H_VTTVID1 — AN1 VTT_SELECT[1]

50 DPRSLPVR — DPRSLPVR — F66 PROC_DPRSLPVR

VTT_SELECT
H_VTTVID1=LO,VTT=1.1V
H_VTTVID1=HI,VTT=1.05V(Default)

CPU VIDS

32,50 CPU_IMON — A41 ISENSE

50 CPU_VCCSENSE — R642 1 — 2 0 — VCC_SENSE_R — F64 VCC_SENSE
50 CPU_VSSSENSE — R643 1 — 2 0 — VSS_SENSE_R — F63 VSS_SENSE

49 VTT_SENSE — VTT_SENSE — N13 VTT_SENSE

T605 PAD — TP_VSS_SENSE_VTT — R12 VSS_SENSE_VTT

SENSE LINES

MAX 1.35A

+V1.8S — R211 — 0_0805 — +V1.8PLL

W39 VCCPLL1
W37 VCCPLL2
U37 VCCPLL3
R39 VCCPLL4
R37 VCCPLL5

C237 22U/6.3V — C661 4.7U/6.3V_0603 CAP0603

EMI

1.8V POWER

+V1.5_DDR — L44 — BLM18AG121SN1D — +1.5V_DDRQ_CK

MAX 0.2A

BB14 VDDQ_CK[1]
BB12 VDDQ_CK[2]

C197 1U/6.3V

IC,ARD_BGA_1288PIN

1.1V RAIL POWER

+V1.05S_VTT

VTT0_11 AW14
VTT0_12 AW12
VTT0_13 AU60
VTT0_14 AU59
VTT0_15 AU12
VTT0_16 AR60
VTT0_17 AR59
VTT0_18 AR12
VTT0_19 AN60
VTT0_20 AN59
VTT0_21 AN35
VTT0_22 AN33
VTT0_23 AN17
VTT0_24 AN15
VTT0_25 AN14
VTT0_26 AN12
VTT0_27 AM10
VTT0_28 AL60
VTT0_29 AL59
VTT0_30 AL17
VTT0_31 AL15
VTT0_32 AL14
VTT0_33 AL12
VTT0_34 AK35
VTT0_35 AK33
VTT0_36 AF39
VTT0_37 AF37
VTT0_38 AF35
VTT0_39 AF33
VTT0_40 AF32
VTT0_41 AF30
VTT0_42 AD39
VTT0_1 BF60
VTT0_2 BF59
VTT0_3 BD60
VTT0_4 BD59
VTT0_5 BB60
VTT0_6 BB59
VTT0_7 AY60
VTT0_8 AW60
VTT0_9 AW35
VTT0_10 AW33
VTT0_43 AD37
VTT0_44 AD35
VTT0_45 AD33
VTT0_46 AD32
VTT0_47 AD30
VTT0_48 W35
VTT0_49 W33
VTT0_50 W32
VTT0_51 W30
VTT0_52 W28
VTT0_53 W26
VTT0_54 W24
VTT0_55 W23
VTT0_56 U35
VTT0_57 U33
VTT0_58 U32
VTT0_59 U30
VTT0_60 U28
VTT0_61 U26
VTT0_62 U24
VTT0_63 U23
VTT0_64 R35
VTT0_65 R33
VTT0_66 R32
VTT0_67 R30
VTT0_68 R28
VTT0_69 R26
VTT0_70 R24
VTT0_71 R23
VTT0_72 AY10
VTT0_73 AN9

3X 22uF
C666 22U/6.3V — C707 22U/6.3V — C708 22U/6.3V

4X 10uF
C709 10U/6.3V CAP0603 — C675 10U/6.3V CAP0603 — C684 10U/6.3V CAP0603 — C737 10U/6.3V CAP0603

20X 1uF
C751 1U/6.3V — C779 1U/6.3V — C764 1U/6.3V — C770 1U/6.3V — C714 1U/6.3V — C784 1U/6.3V — C713 1U/6.3V — C763 1U/6.3V — C662 1U/6.3V — C690 1U/6.3V
C744 1U/6.3V — C719 1U/6.3V — C742 1U/6.3V — C691 1U/6.3V — C757 1U/6.3V — C741 1U/6.3V — C663 1U/6.3V — C739 1U/6.3V — C730 1U/6.3V — C677 1U/6.3V

PC601 *330u/2.5v/ESR9_NC

+VTT_72 — R199 1 — 2
+VTT_73 — R200 1 — 2
+V1.05S_VTT

Dell/ Flex Confidential		
Title: CPU POWER_CORE		
Size	Document Number: Inspiron Z -- INTEL	Rev X01
Date: Monday, January 18, 2010	Sheet 9 of 57	

ARRANDALE PROCESSOR (POWER-CORE)

MAX 27A

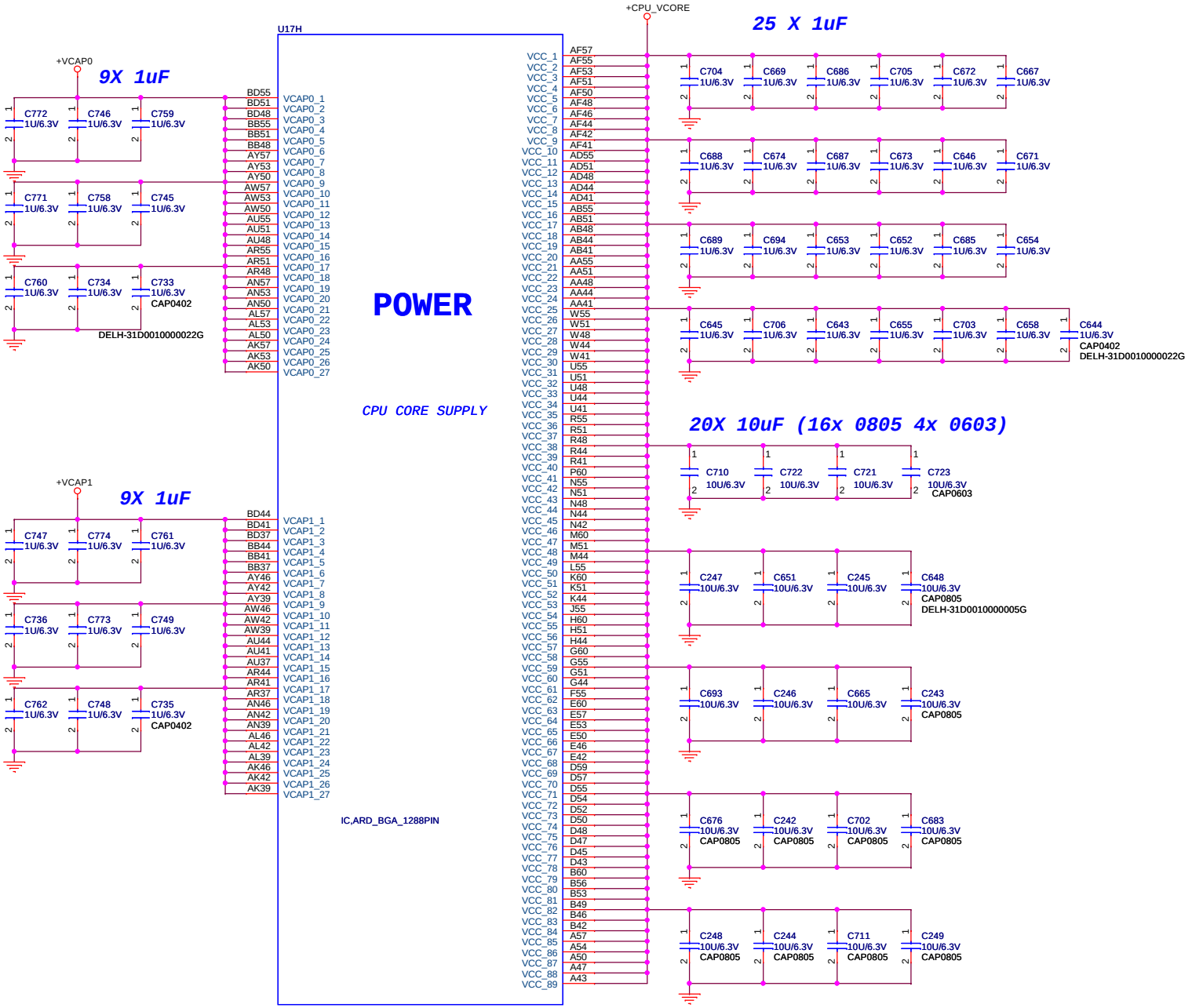

Dell/ Flex Confidential		
Title: CPU POWER_VTT		
Size	Document Number: Inspiron Z -- INTEL	Rev X01
Date: Monday, January 18, 2010	Sheet 10 of 57	

ARRANDALE PROCESSOR (POWER-DDR, GRAPHICS)

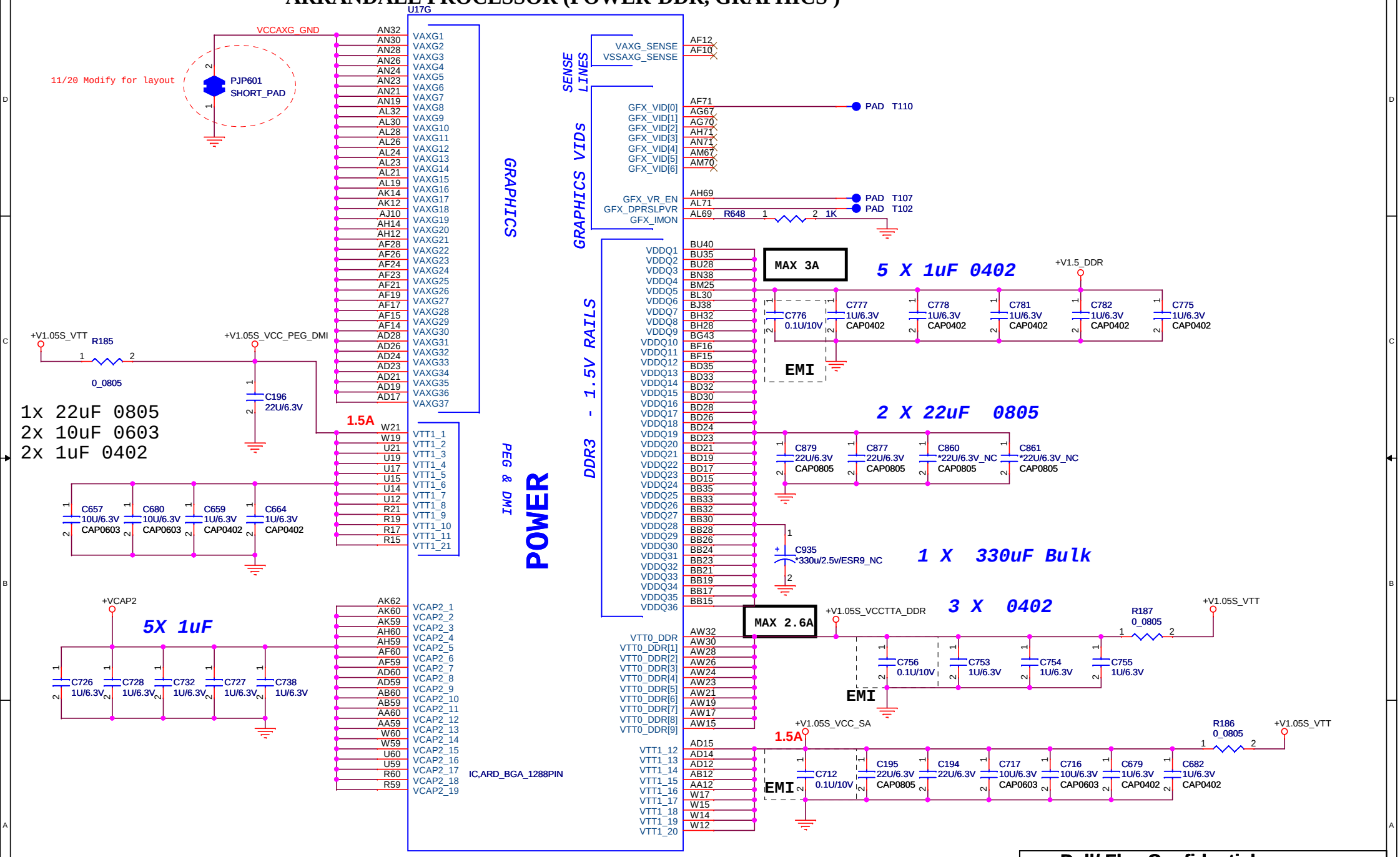

Dell/ Flex Confidential	
Title	CPU POWER_DDR
Size	Document Number: Inspiron Z -- INTEL
Rev	X01
Date: Monday, January 18, 2010	Sheet 11 of 57

ARRANDALE /CLARKSFIELD PROCESSOR (GND)

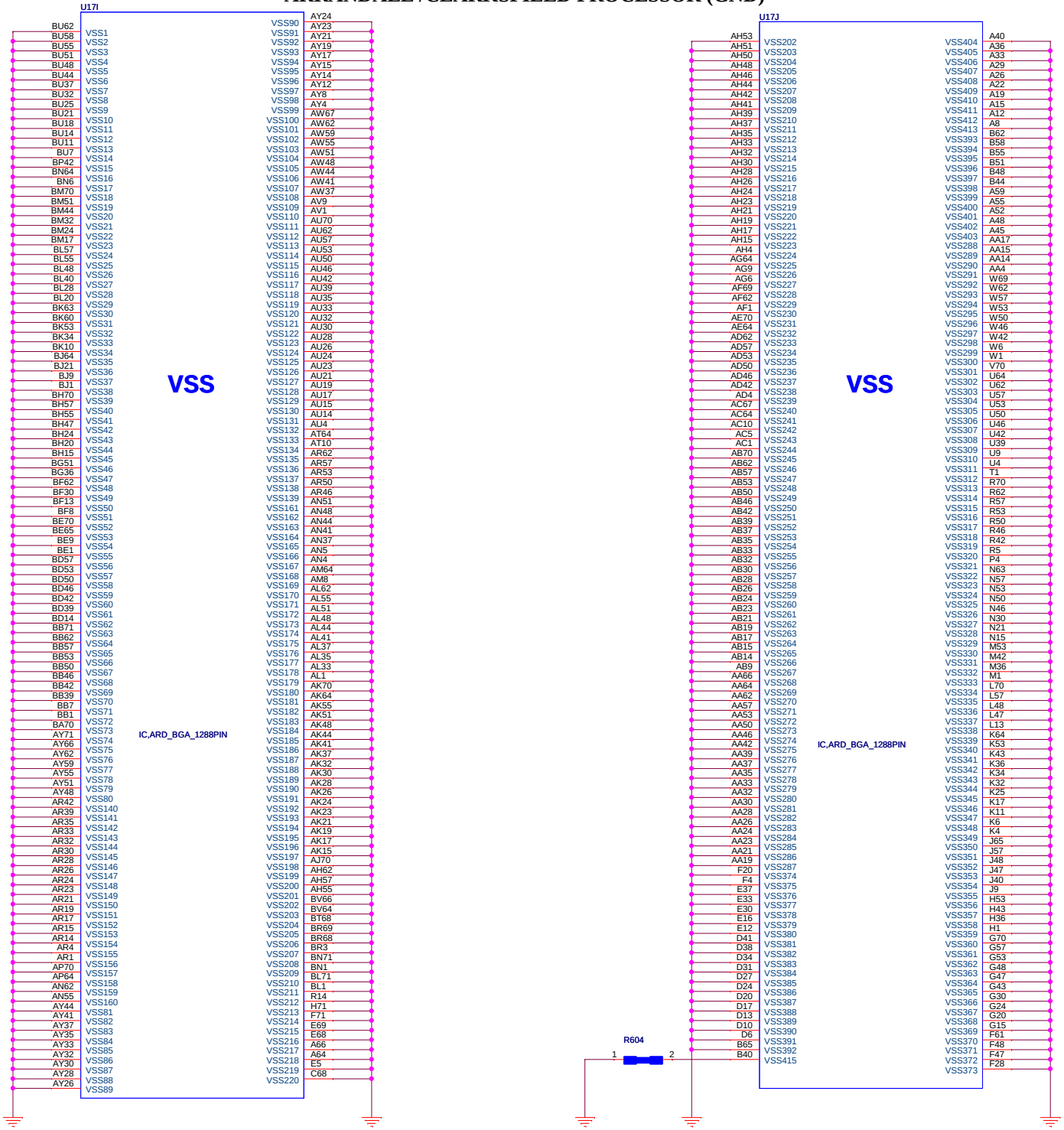

Dell/ Flex Confidential

Title	CPU GND		
Size	Document Number: Inspiron Z -- INTEL		Rev X01
Date: Monday, January 18, 2010	Sheet 12 of 57		

ARRANDALE /CLARKSFIELD PROCESSOR(RESERVED, CFG)

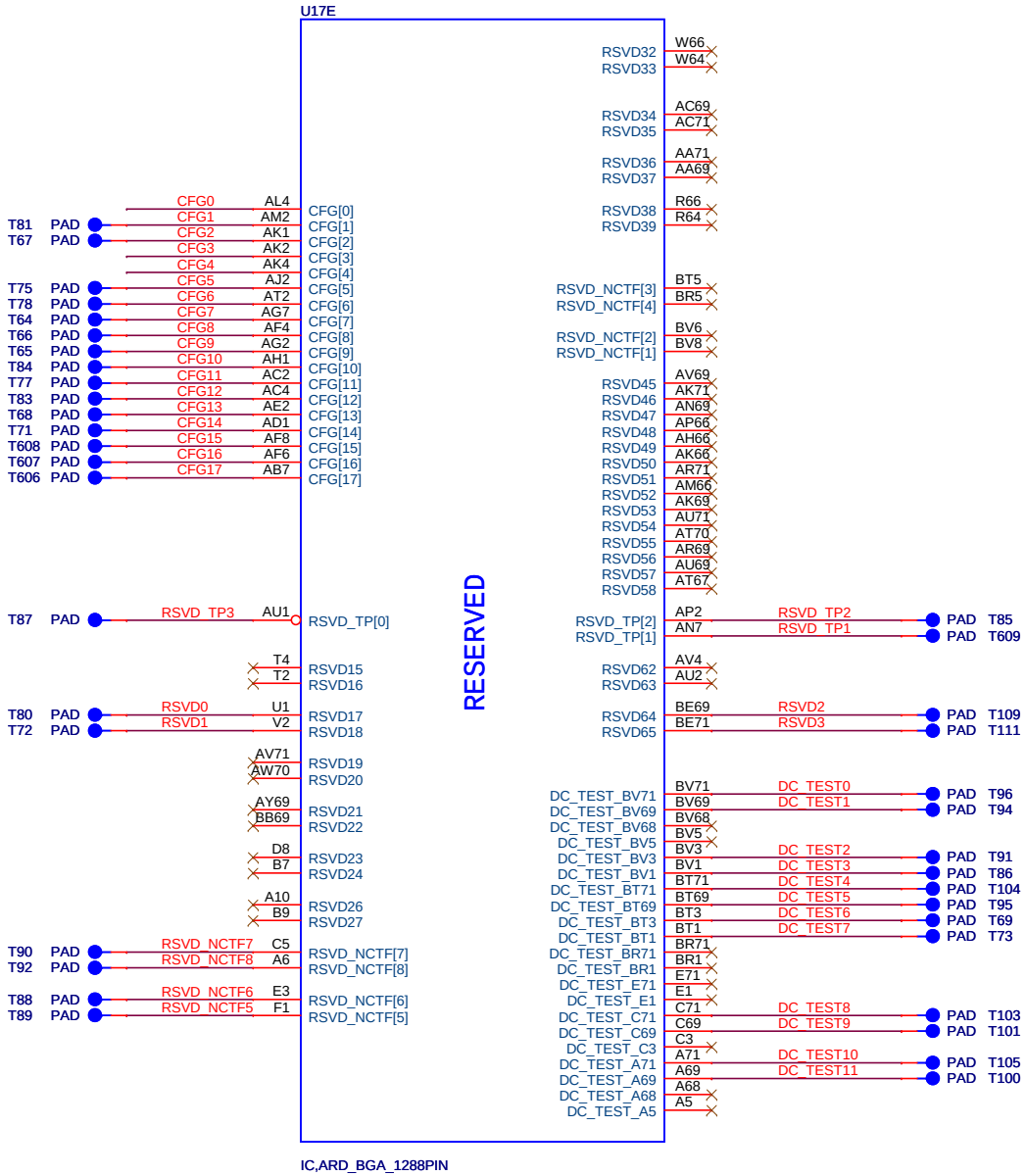

CFG Straps for PROCESSOR

PCI-Express Configuration Select	
CFG0	1:Single PEG(Default) 0:Bifurcation enabled

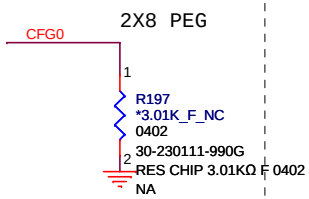

CFG3 - PCI-Express Static Lane Reversal	
CFG3	1 :Normal Operation(Default) 0 :Lane Numbers Reversed 15 -> 0, 14 -> 1, ...

CFG3 — PAD T79

CFG4 - Display Port Presence	
CFG4	1:Disabled; No Physical Display Port attached to Embedded Display Port (Default) 0:Enabled; An external Display Port device is connected to the Embedded Display Port

CFG4 — PAD T70

Dell/ Flex Confidential

Title	CPU_RSVD/ CFG	
Size	Document Number: Inspiron Z -- INTEL	Rev X01
Date: Monday, January 18, 2010	Sheet 13 of 57	

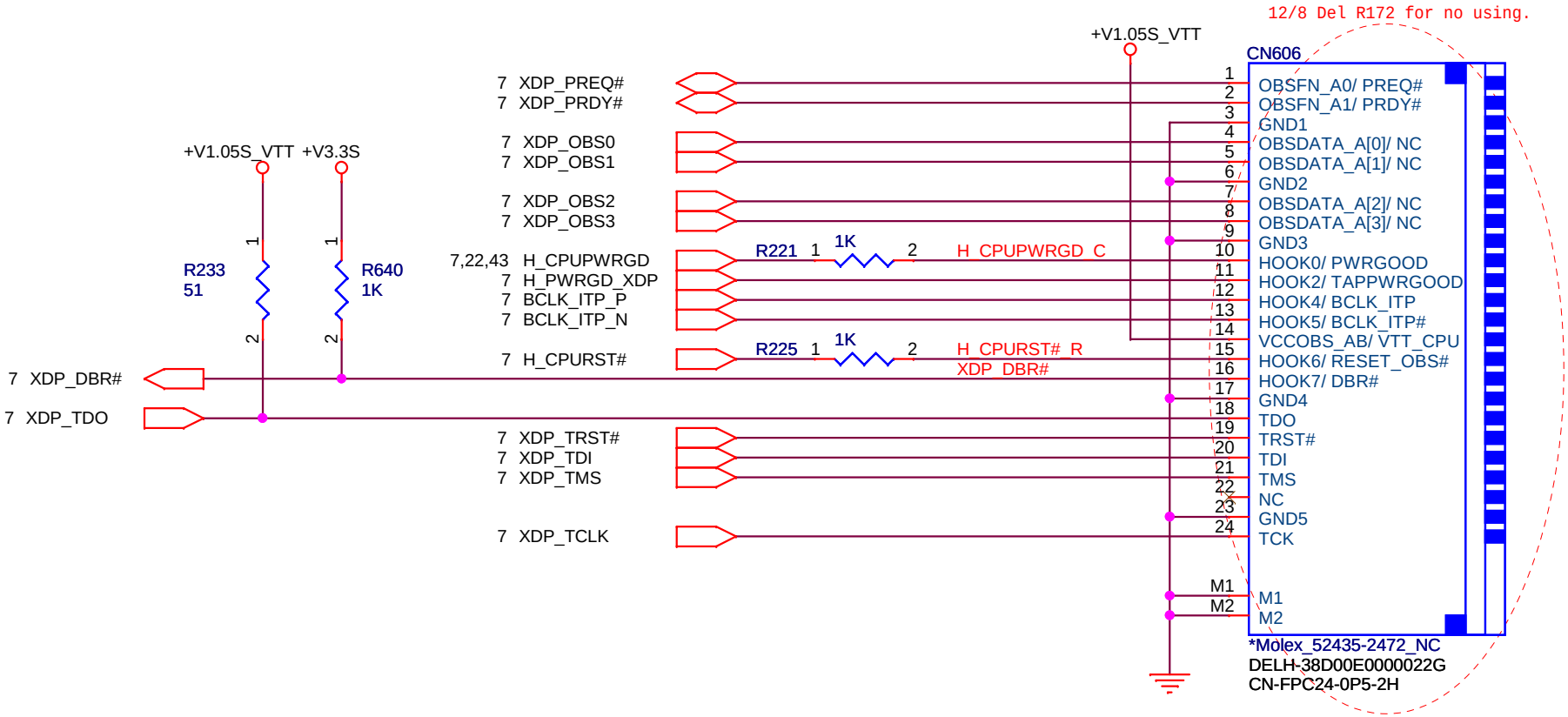

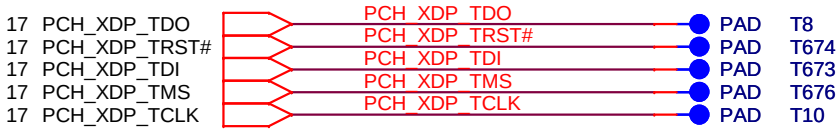

Dell/ Flex Confidential

Title	**XDP_PROCESSOR/ PCH**	
Size	Document Number **Inspiron Z -- INTEL**	Rev X01
Date: Monday, January 18, 2010	Sheet 14 of 57	

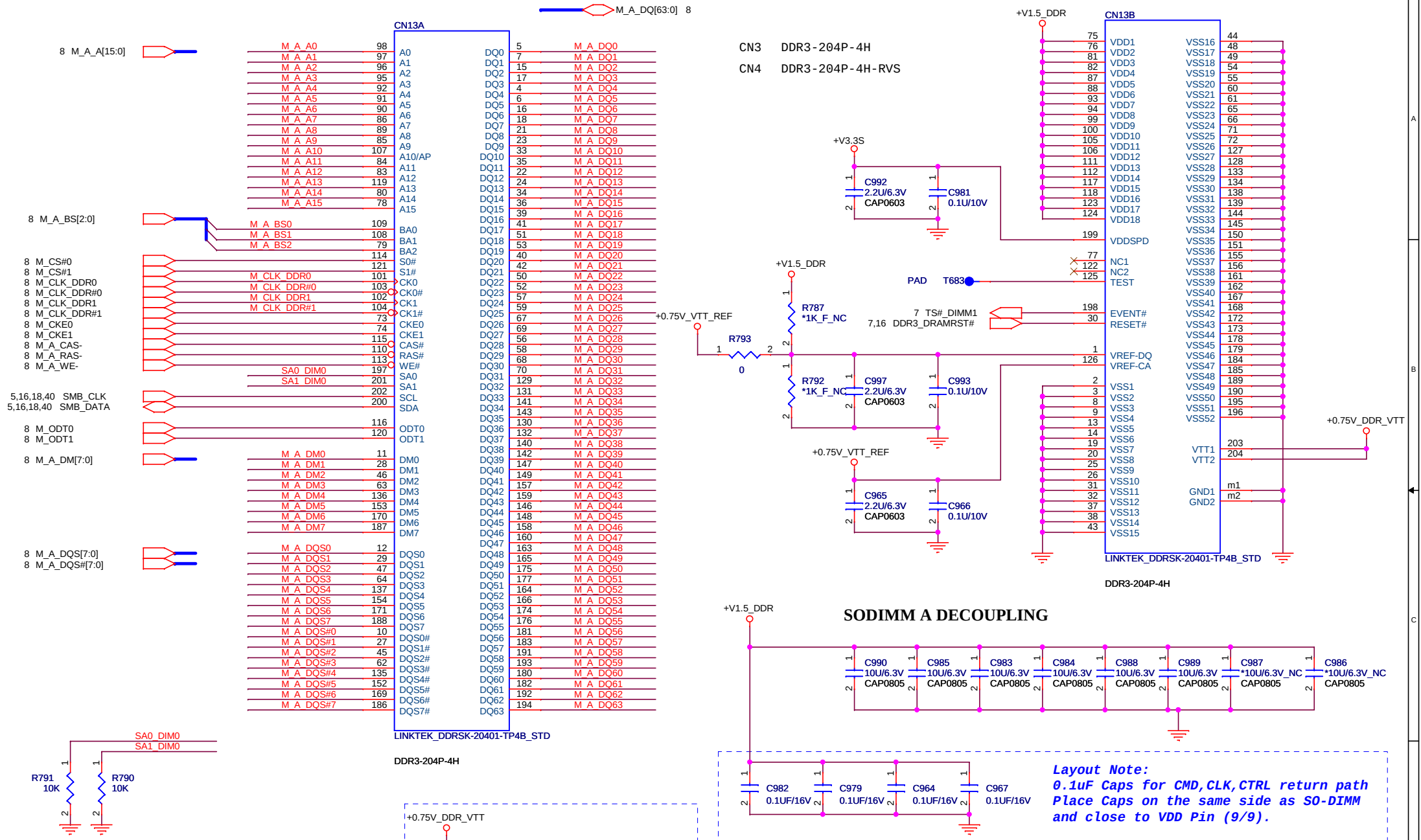

SO-DIMM Address		
SA0_DIM0 = 0, SA1_DIM0 = 0	SPD	0xA0
	TS	0x30
SA0_DIM0 = 1, SA1_DIM0 = 0	SPD	0xA2
	TS	0x32

Dell/ Flex Confidential

Title: DDR3 SO-DIMM1_204P_STD

Size | Document Number: Inspiron Z -- INTEL | Rev: X01

Date: Monday, January 18, 2010 | Sheet 15 of 57

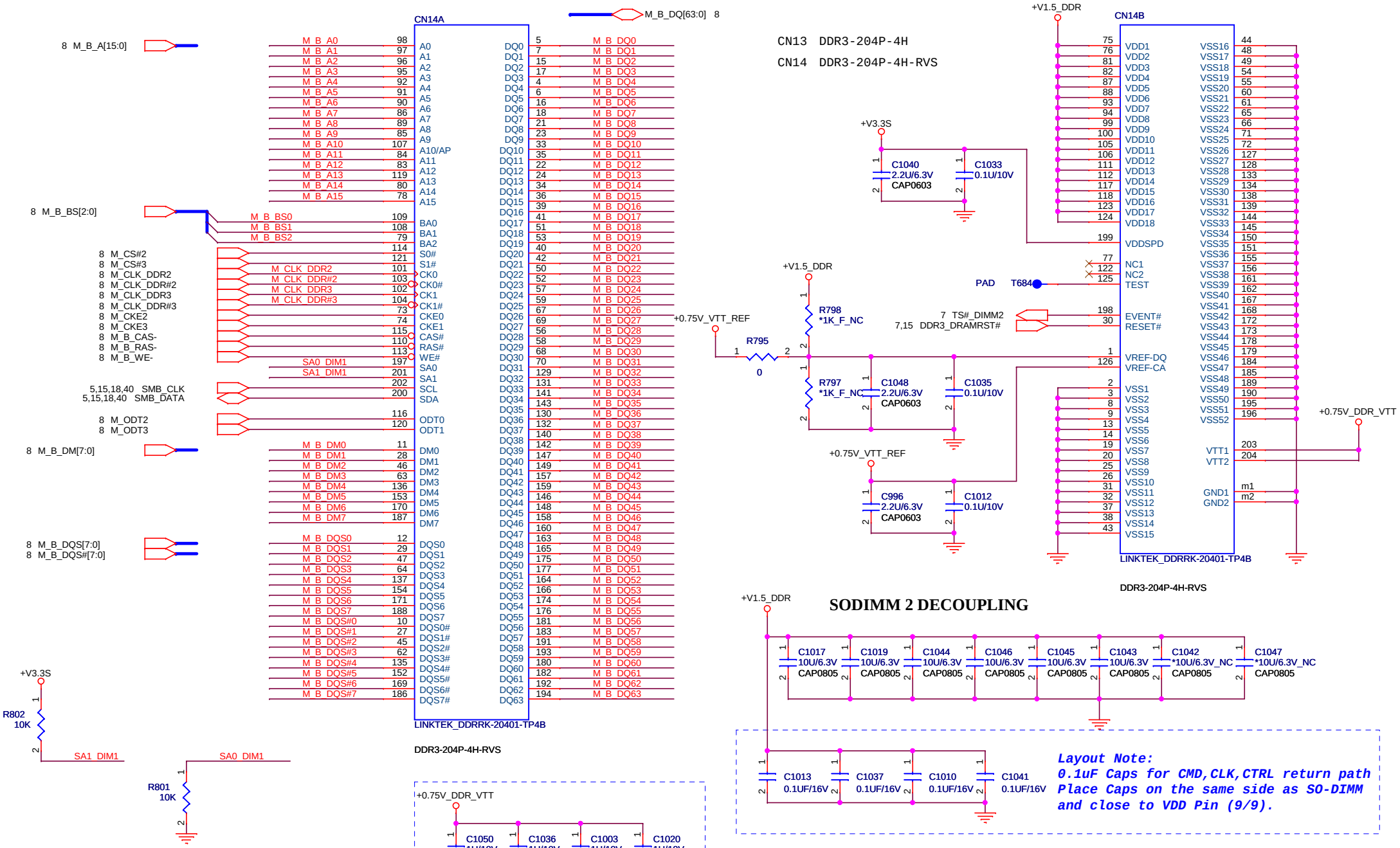

SO-DIMM Address	
SPD	0xA4
TS	0x34

Dell/ Flex Confidential

Title: **DDR3 SO-DIMM2_204P_RVS**

Size | Document Number: **Inspiron Z -- INTEL** | Rev: X01

Date: Monday, January 18, 2010 | Sheet 16 of 57

IBEX PEAK-M (HDA,JTAG,SATA)

Internal Pull-Up and Pull-Down

	Mark
Pull-Up	P+
Pull-Down	P-

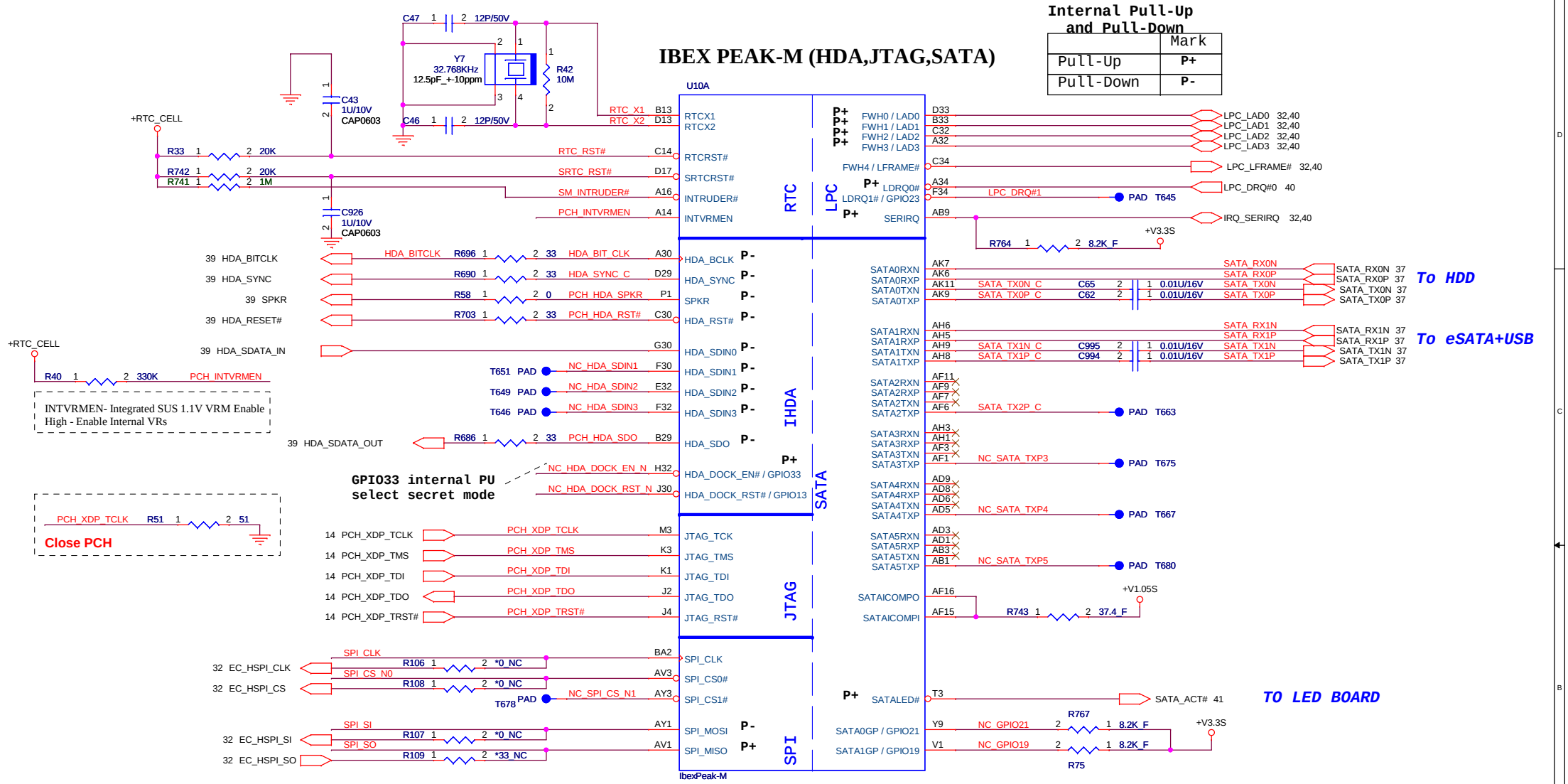

Flash Descriptor Security

High	Flash Descriptor will be in effect (default)
Low	Descriptor Security will be overridden

Dell/ Flex Confidential

Title	PCH 1/9 - HDA/LPC/SATA
Size	
Document Number	Inspiron Z -- INTEL
Rev	X01
Date:	Monday, January 18, 2010
Sheet	17 of 57

IBEX PEAK-M (PCI-E,SMBUS,CLK)

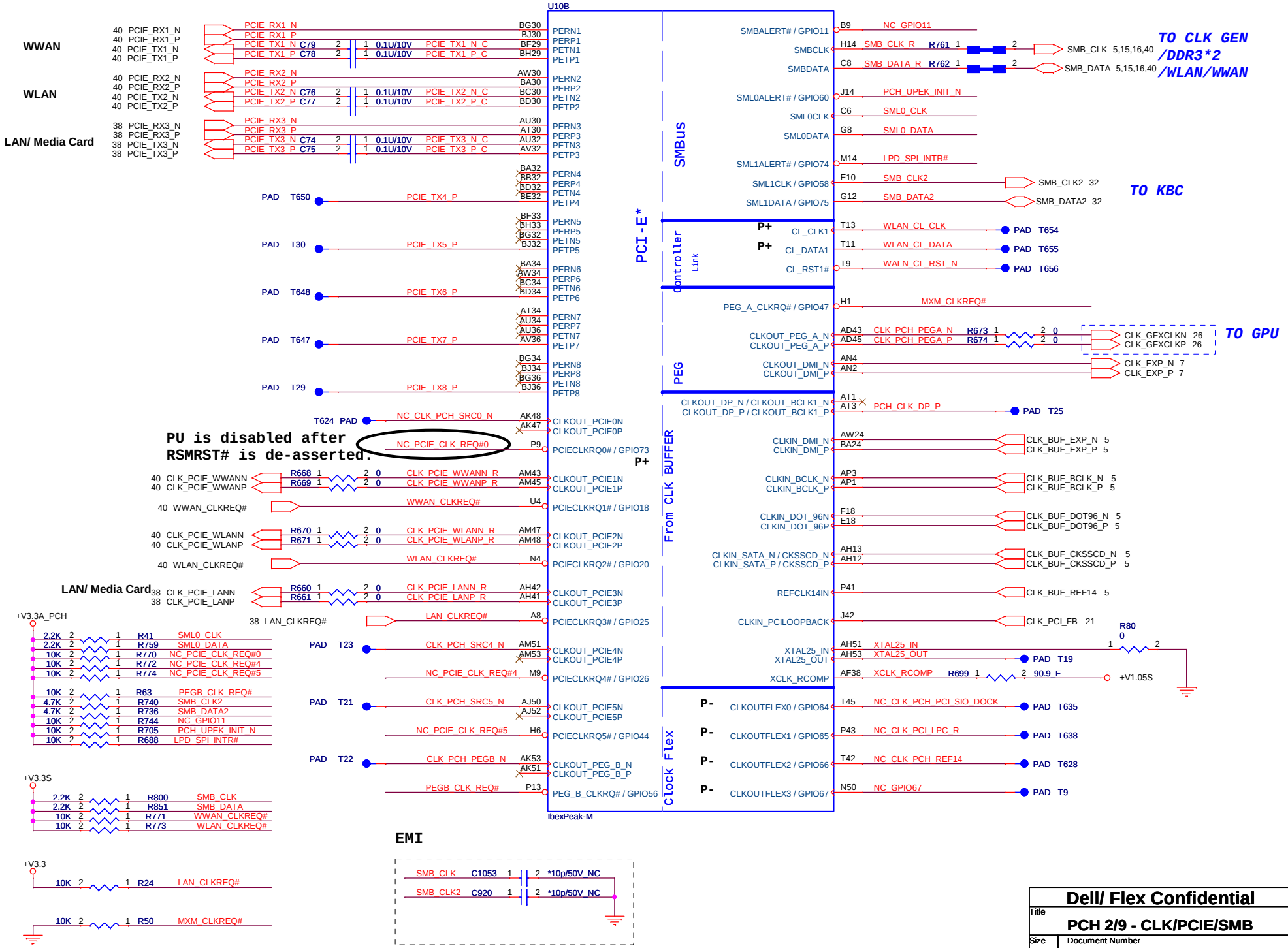

Dell/ Flex Confidential

Title	PCH 2/9 - CLK/PCIE/SMB
Size	
Document Number	Inspiron Z -- INTEL
Rev	X01
Date: Monday, January 18, 2010	Sheet 18 of 57

IBEX PEAK-M (DMI,FDI,GPIO)

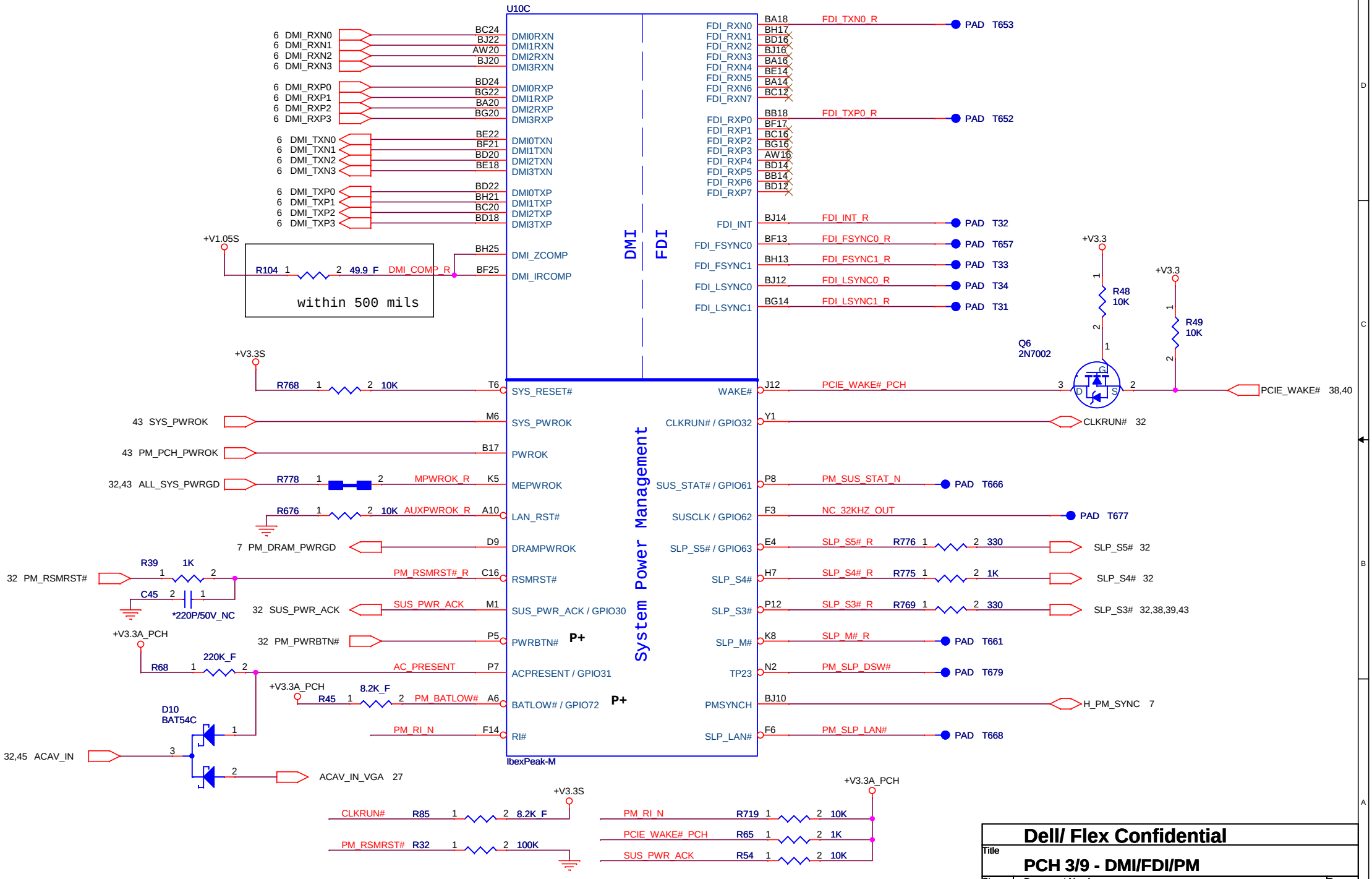

Dell/ Flex Confidential

Title: **PCH 3/9 - DMI/FDI/PM**

Size | Document Number: **Inspiron Z -- INTEL** | Rev: X01

Date: Monday, January 18, 2010 | Sheet 19 of 57

IBEX PEAK-M (LVDS,DDI)

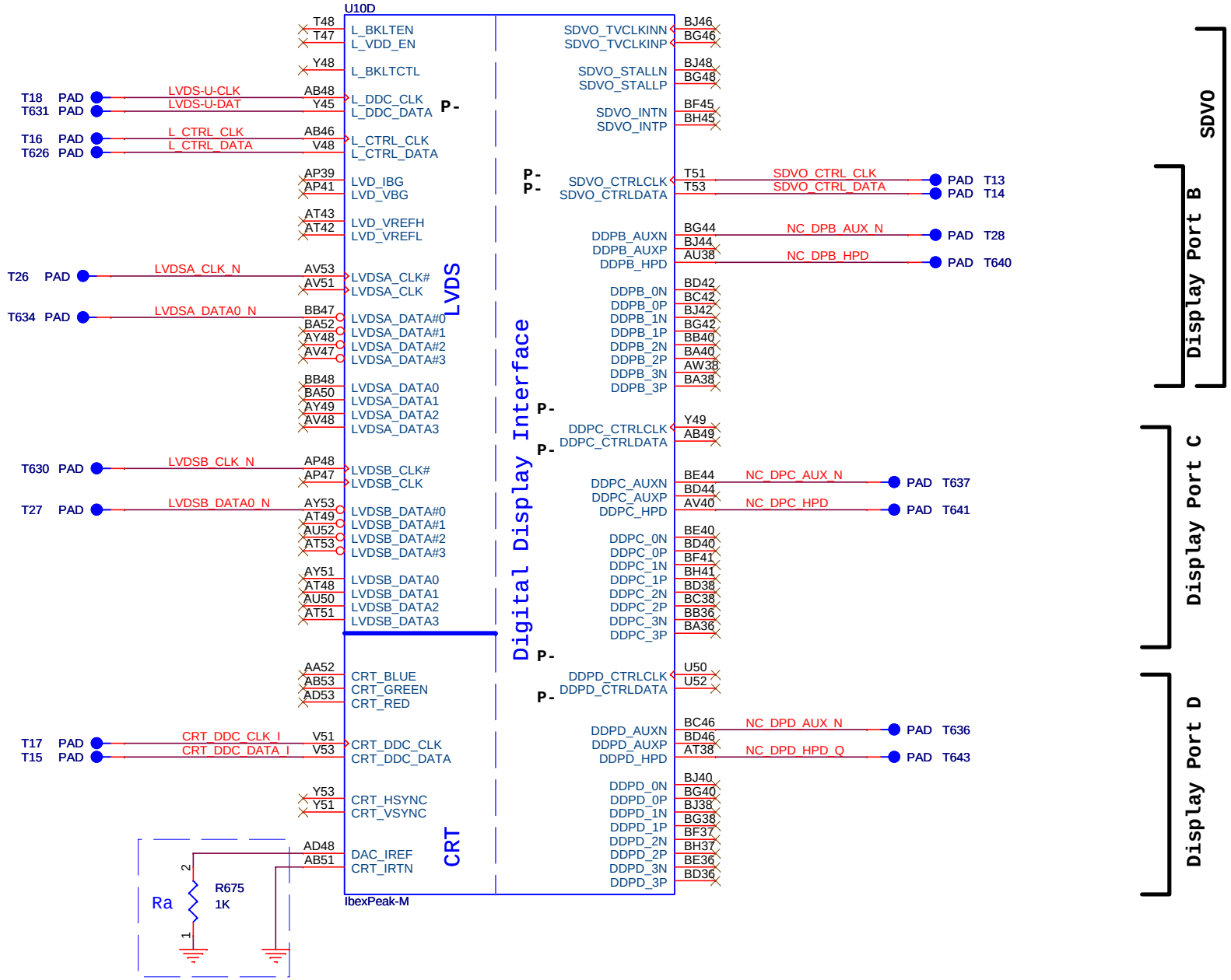

Internal VGA disable
keep Ra to GND and IRTN
keep connect to GND

Dell/ Flex Confidential

Title	PCH 4/9 - CRT/DP/LVDS	
Size	Document Number: Inspiron Z -- INTEL	Rev X01
Date: Monday, January 18, 2010	Sheet 20 of 57	

IBEX PEAK-M (PCI,USB,INTEL(R) TURBO MEMORY)

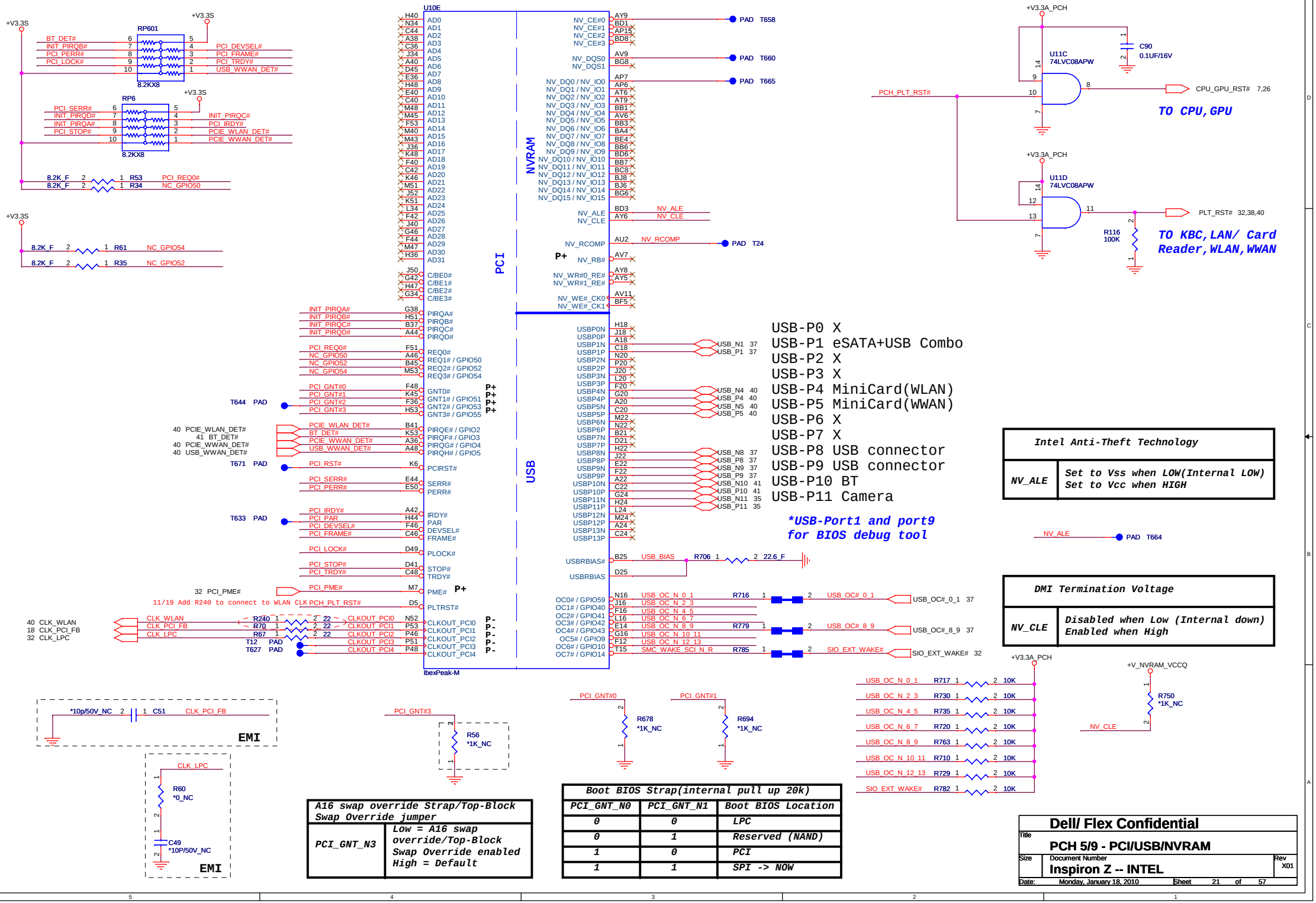

Intel Anti-Theft Technology	
NV_ALE	Set to Vss when LOW(Internal LOW) Set to Vcc when HIGH

DMI Termination Voltage	
NV_CLE	Disabled when Low (Internal down) Enabled when High

A16 swap override Strap/Top-Block Swap Override jumper	
PCI_GNT_N3	Low = A16 swap override/Top-Block Swap Override enabled High = Default

Boot BIOS Strap(internal pull up 20k)		
PCI_GNT_N0	PCI_GNT_N1	Boot BIOS Location
0	0	LPC
0	1	Reserved (NAND)
1	0	PCI
1	1	SPI -> NOW

Dell/ Flex Confidential

Title: PCH 5/9 - PCI/USB/NVRAM

Size: Document Number: Inspiron Z -- INTEL Rev: X01

Date: Monday, January 18, 2010 Sheet 21 of 57

IBEX PEAK-M(GPIO,VSS_NCTF,RSVD)

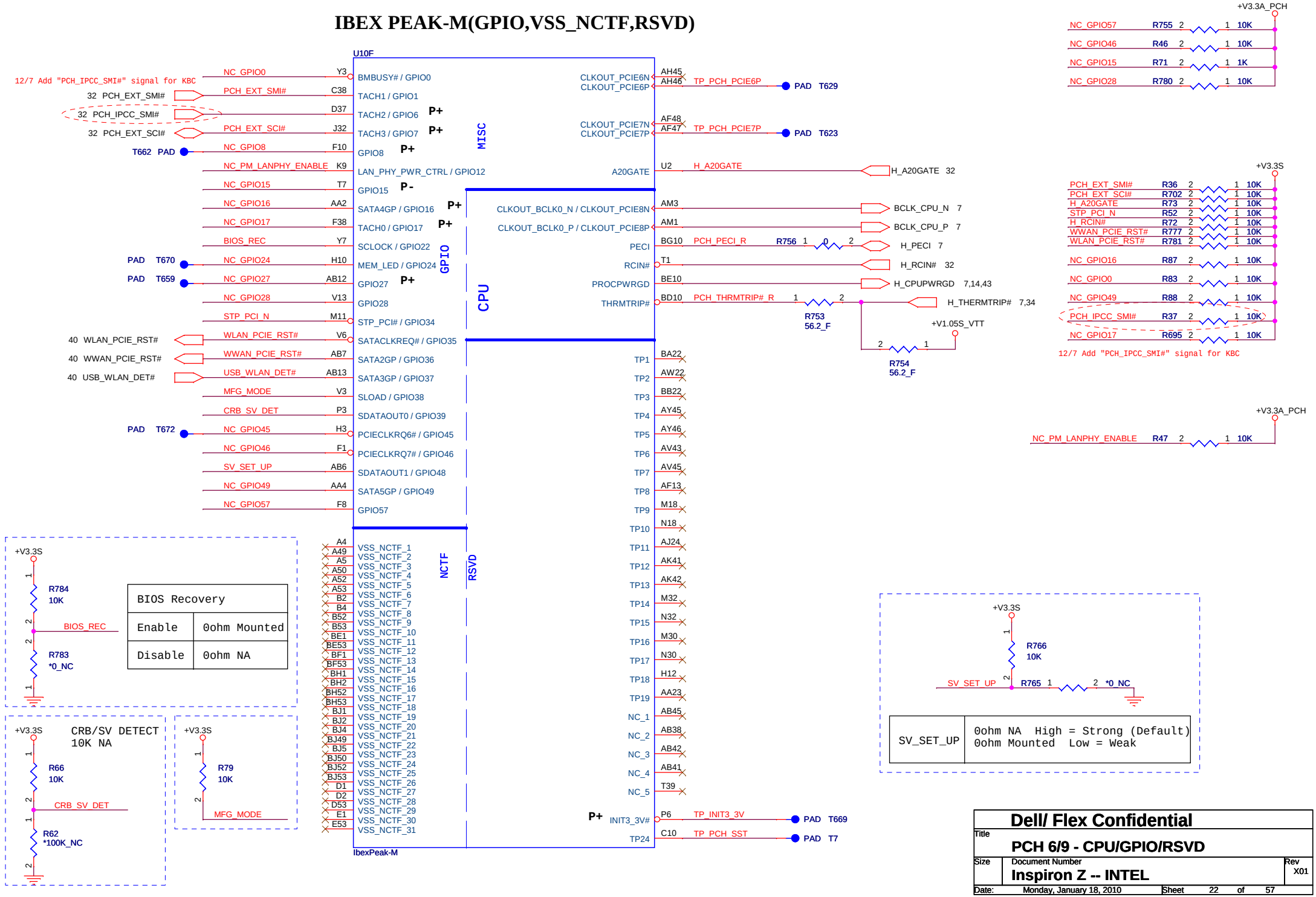

Dell/ Flex Confidential		
Title: PCH 6/9 - CPU/GPIO/RSVD		
Size	Document Number: Inspiron Z -- INTEL	Rev X01
Date: Monday, January 18, 2010	Sheet 22 of 57	

IBEX PEAK-M(POWER)

Please note that all Ibex Peak-M rails with netnames +V1.1S and +V1.1M rails are actually +V1.05S and +V1.05M rails

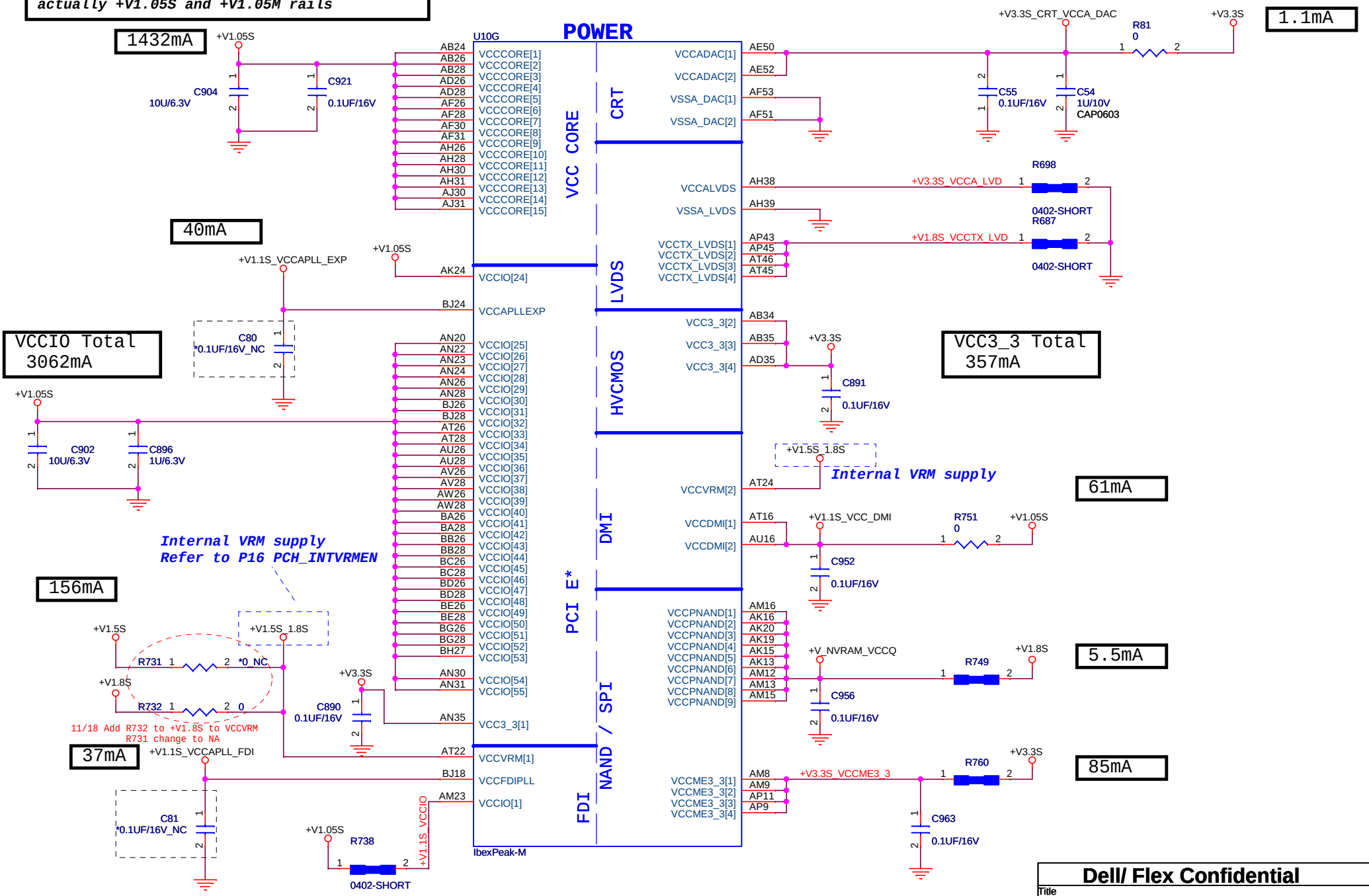

Dell/ Flex Confidential

Title	PCH 7/9 - POWER_1	
Size	Document Number: Inspiron Z -- INTEL	Rev X01
Date: Monday, January 18, 2010	Sheet 23 of 57	

IBEX PEAK-M(POWER)

52mA

320mA

VCCME Total
3062mA

Please note that all Ibex Peak-M rails with netnames +V1.1S and +V1.1M rails are actually +V1.05S and +V1.05M rails

1UF*2 pcs
for 2 blocks

68mA

69mA

Internal VRM supply

VCCIO Total
3062mA

VCCSUS3_3 Total
163mA

<1mA

+5V_ALW has off during S4/S5 battery mode.

<1mA

VCC3_3 Total
357mA

31mA

Internal VRM supply

<1mA

2mA

6mA

Close to PCH

U10J

POWER

USB

Clock and Miscellaneous

PCI/GPIO/LPC

SATA

CPU

RTC

HDA

IbexPeak-M

Pin	Signal
AP51	VCCACLK[1]
AP53	VCCACLK[2]
AF23	VCCLAN[1]
AF24	VCCLAN[2]
Y20	DCPSUSBYP
AD38	VCCME[1]
AD39	VCCME[2]
AD41	VCCME[3]
AF43	VCCME[4]
AF41	VCCME[5]
AF42	VCCME[6]
V39	VCCME[7]
V41	VCCME[8]
V42	VCCME[9]
Y39	VCCME[10]
Y41	VCCME[11]
Y42	VCCME[12]
V9	DCPRTC
AU24	VCCVRM[3]
BB51	VCCADPLLA[1]
BB53	VCCADPLLA[2]
BD51	VCCADPLLB[1]
BD53	VCCADPLLB[2]
AH23	VCCIO[21]
AJ35	VCCIO[22]
AH35	VCCIO[23]
AF34	VCCIO[2]
AH34	VCCIO[3]
AF32	VCCIO[4]
V12	DCPSST
Y22	DCPSUS
P18	VCCSUS3_3[29]
U19	VCCSUS3_3[30]
U20	VCCSUS3_3[31]
U22	VCCSUS3_3[32]
V15	VCC3_3[5]
V16	VCC3_3[6]
Y16	VCC3_3[7]
AT18	V_CPU_IO[1]
AU18	V_CPU_IO[2]
A12	VCCRTC
V24	VCCIO[5]
V26	VCCIO[6]
Y24	VCCIO[7]
Y26	VCCIO[8]
V28	VCCSUS3_3[1]
U28	VCCSUS3_3[2]
U26	VCCSUS3_3[3]
U24	VCCSUS3_3[4]
P28	VCCSUS3_3[5]
P26	VCCSUS3_3[6]
N28	VCCSUS3_3[7]
N26	VCCSUS3_3[8]
M28	VCCSUS3_3[9]
M26	VCCSUS3_3[10]
L28	VCCSUS3_3[11]
L26	VCCSUS3_3[12]
J28	VCCSUS3_3[13]
J26	VCCSUS3_3[14]
H28	VCCSUS3_3[15]
H26	VCCSUS3_3[16]
G28	VCCSUS3_3[17]
G26	VCCSUS3_3[18]
F28	VCCSUS3_3[19]
F26	VCCSUS3_3[20]
E28	VCCSUS3_3[21]
E26	VCCSUS3_3[22]
C28	VCCSUS3_3[23]
C26	VCCSUS3_3[24]
B27	VCCSUS3_3[25]
A28	VCCSUS3_3[26]
A26	VCCSUS3_3[27]
U23	VCCSUS3_3[28]
V23	VCCIO[56]
F24	V5REF_SUS
K49	V5REF
J38	VCC3_3[8]
L38	VCC3_3[9]
M36	VCC3_3[10]
N36	VCC3_3[11]
P36	VCC3_3[12]
U35	VCC3_3[13]
AD13	VCC3_3[14]
AK3	VCCSATAPLL[1]
AK1	VCCSATAPLL[2]
AH22	VCCIO[9]
AT20	VCCVRM[4]
AH19	VCCIO[10]
AD20	VCCIO[11]
AF22	VCCIO[12]
AD19	VCCIO[13]
AF20	VCCIO[14]
AF19	VCCIO[15]
AH20	VCCIO[16]
AB19	VCCIO[17]
AB20	VCCIO[18]
AB22	VCCIO[19]
AD22	VCCIO[20]
AA34	VCCME[13]
Y34	VCCME[14]
Y35	VCCME[15]
AA35	VCCME[16]
L30	VCCSUSHDA

Resistor	Net	Pin 1	Pin 2
R737	+V1.1S_VCCLAN	1	2
R718	PCH_VCC_1_1_20	1	2
R704	PCH_VCC_1_1_22	1	2
R734	+3.3V_VCCSUSHDA	1	2

Capacitor	Value
C832	*1U/6.3V_NC
C930	0.1U/10V
C86	22U/6.3V
C84	22U/6.3V
C919	1U/6.3V
C910	*1U/6.3V_NC
C962	0.1U/10V
C68	*220U/2.5V/ESR15_NC
C813	1U/6.3V
C72	*220U/2.5V/ESR15_NC
C814	1U/6.3V
C929	1U/6.3V
C909	1U/6.3V
C906	1U/10V CAP0603
C901	0.1U/10V
C972	0.1U/10V
C917	0.1U/10V
C915	0.1U/10V
C957	0.1U/10V
C903	4.7U/6.3V_0603 CAP0603
C893	0.1U/10V
C881	0.1U/10V
C937	0.1U/10V
C936	0.1U/10V
C931	1U/6.3V
C924	0.1U/10V
C927	0.1U/10V
C42	0.1U/10V
C878	0.1U/10V
C932	0.1U/10V
C974	*0.1U/10V_NC
C928	0.1U/10V
C918	1U/6.3V
C911	0.1U/10V
C912	1U/6.3V
C82	22U/6.3V
C85	*22U/6.3V_NC
C48	1U/10V
C43	10
R31	10

Diode	Model
D8	BAT54C
D9	SDMK0340L-7-F

Inductor	Model
L16	BLM18AG121SN1D
L21	BLM18AG121SN1D

EMI

Dell/ Flex Confidential

Title	PCH 8/9 - POWER_2
Size	
Document Number	Inspiron Z -- INTEL
Rev	X01
Date:	Monday, January 18, 2010
Sheet	24 of 57

IBEX PEAK-M (GND)

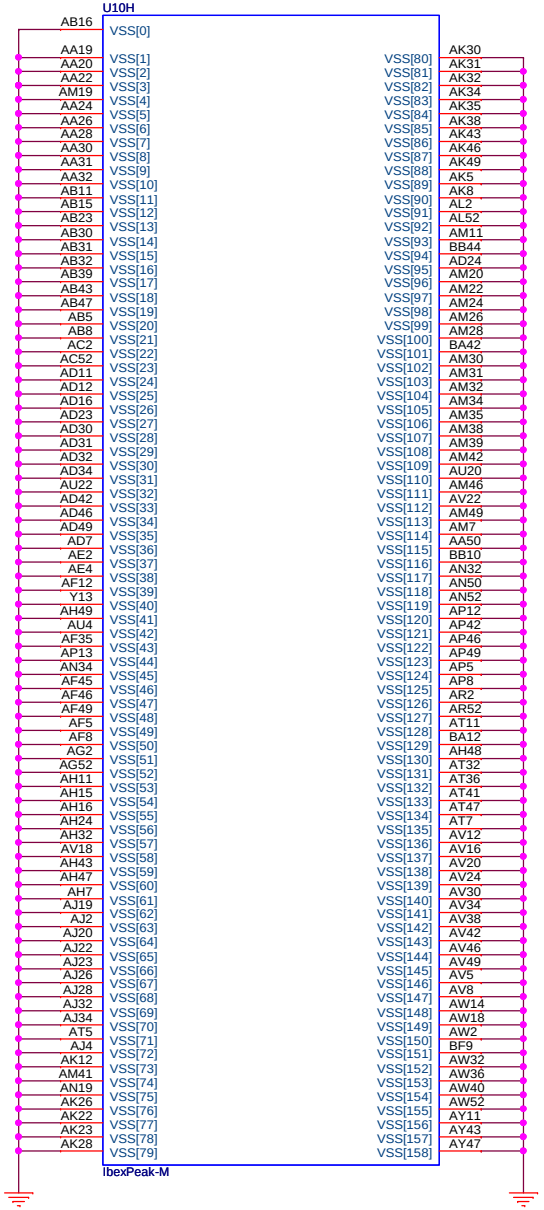

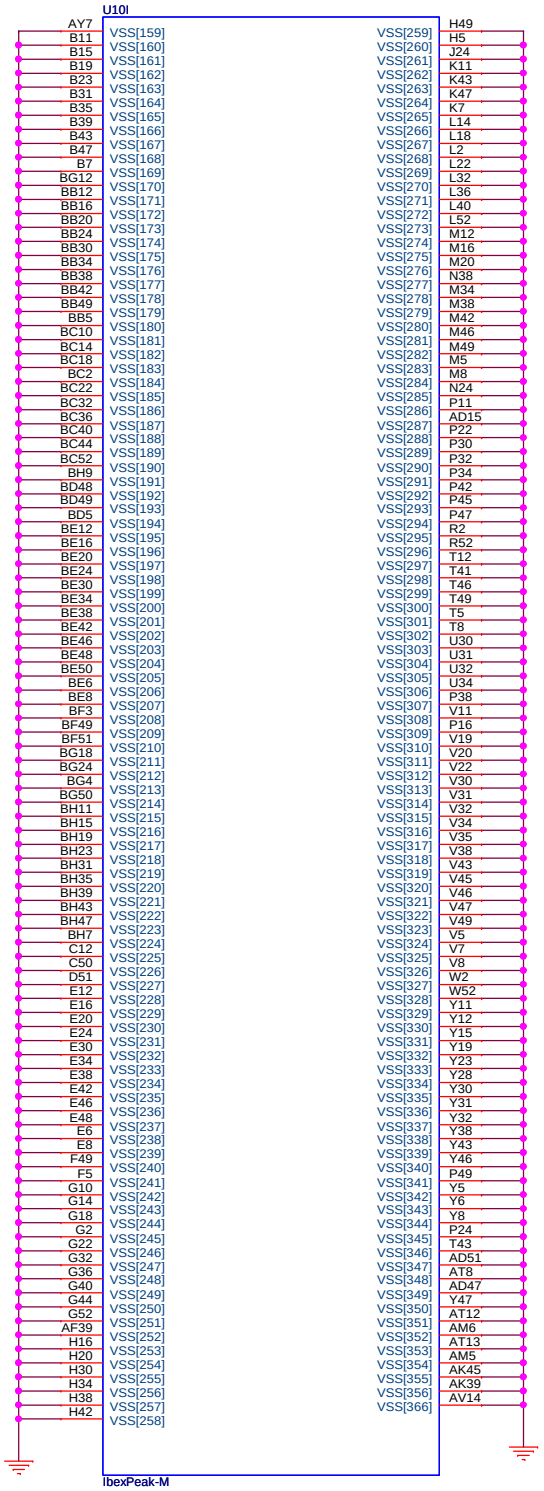

Dell/ Flex Confidential

Title	PCH 9/9 - GND	
Size	Document Number: Inspiron Z -- INTEL	Rev X01
Date: Monday, January 18, 2010	Sheet 25 of 57	

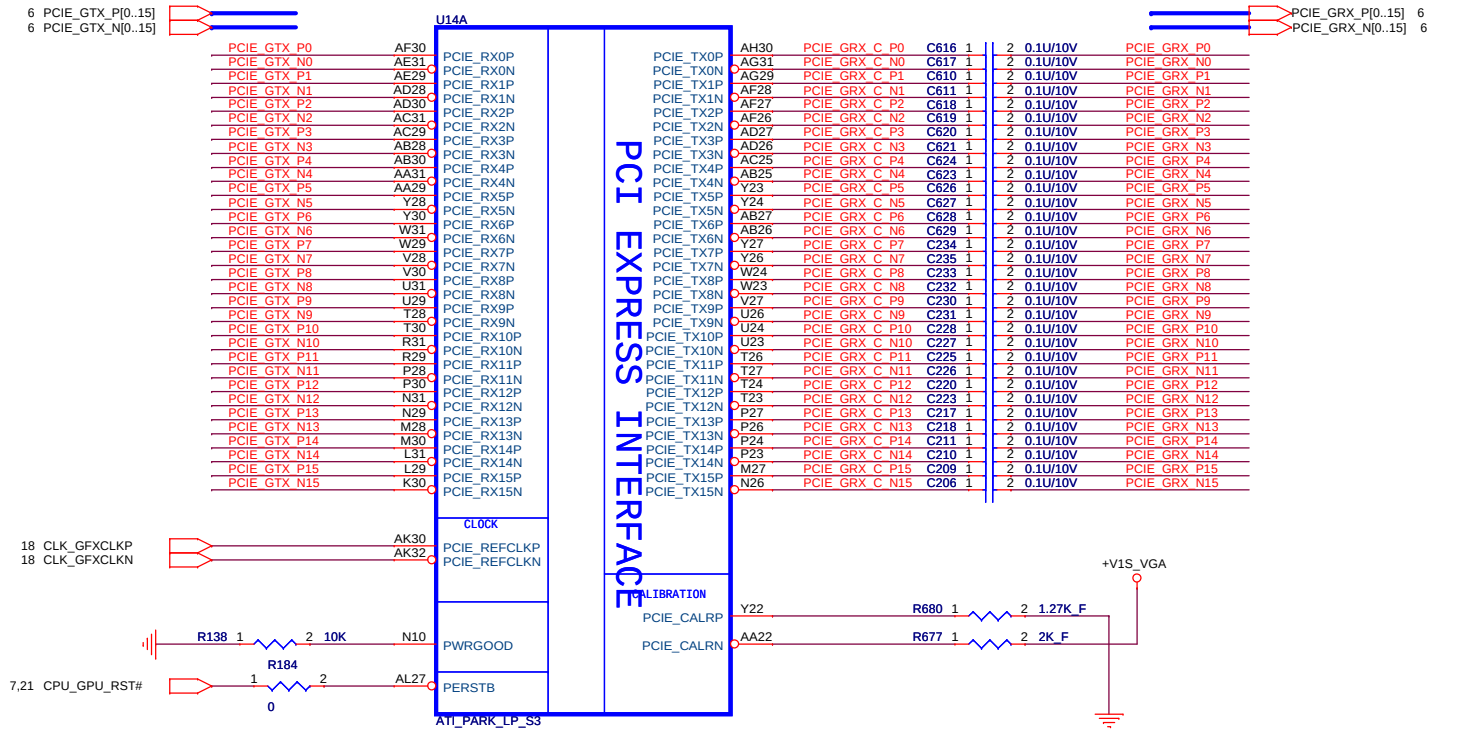

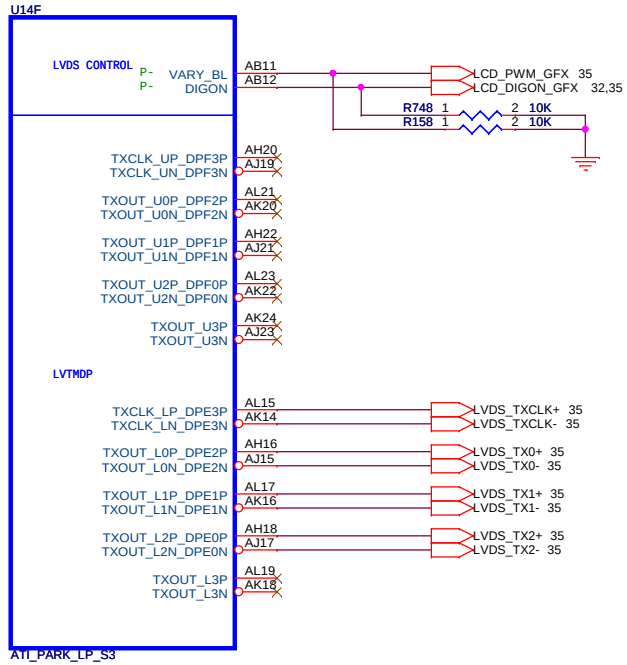

Madison H/W STRAPS

All Signal had internal pull-down

VIP_DEVICE_STRAP_EN

VIP Device Strap Enable
L: Ignore VIP Device Strap
H: Enable VIP Device Strap

27 CRT_V2SYNC — PAD T56

TX_PWRS_ENB

Transmitter Power Savings Enbale
L: 50% Tx output swing (DEFAULT)
H: Full Tx output swing

27 VGA_GPIO0 — R139 *10K_NC — +V3.3S_VGA

CONFIG[2, 1, 0]

If BIOS_ROM_EN = 1, then CONFIG[2:0] defines the ROM type.
If BIOS_ROM_EN = 0, then CONFIG[2:0] defines the primary memory aperture size.

27 VGA_GPIO13 — R152 *10K_NC
27 VGA_GPIO12 — R153 *10K_NC
27 VGA_GPIO11 — R151 10K
+V3.3S_VGA

AUD[1, 0]

LL: No audio function
LH: Audio for DP only
HL: Audio for DP& HDMI if dongle is detected
HH: Audio both for DP& HDMI (DEFAULT)

27 CRT_HSYNC — R177 10K
27 CRT_VSYNC — R181 10K
+V3.3S_VGA

VGA_DIS

VGA Disable
L: VGA Controller capacity Enabled
H: The device won'y be recognized as the system's VGA controller

27 VGA_GPIO9_ROMSI — PAD T51

TX_DEEMPH_EN

PCI Express Transmitter De-emphasis Enable
L: Tx de-emphasis disable (DEFAULT)
H: Tx de-emphasis enable

27 VGA_GPIO1 — R141 *10K_NC — +V3.3S_VGA

These two TX setting can only be used if the PCIe bus design meets "Low Loss Interconnect" requirements.

BIOS_ROM_EN

Enable external BIOS ROM device
L: Disable external BIOS ROM device (DEFAULT)
H: Enable external BIOS ROM device

27 GPIO_22_ROMCSB — PAD T49

BIF_GEN2_EN_A

L: PCIe device as 2.5GT/s capable (DEFAULT)
H: PCIe device as 5.0GT/s capable

27 VGA_GPIO2 — R140 *10K_NC — +V3.3S_VGA

RESERVED

HSYNC
GPIO_8_ROMSO
GPIO21_BB_EN
These Signal were Internal used only.

Dell/ Flex Confidential		
Title: Park 1/5 - PCIE/LVDS		
Size	Document Number: Inspiron Z -- INTEL	Rev X01
Date: Monday, January 18, 2010	Sheet 26 of 57	

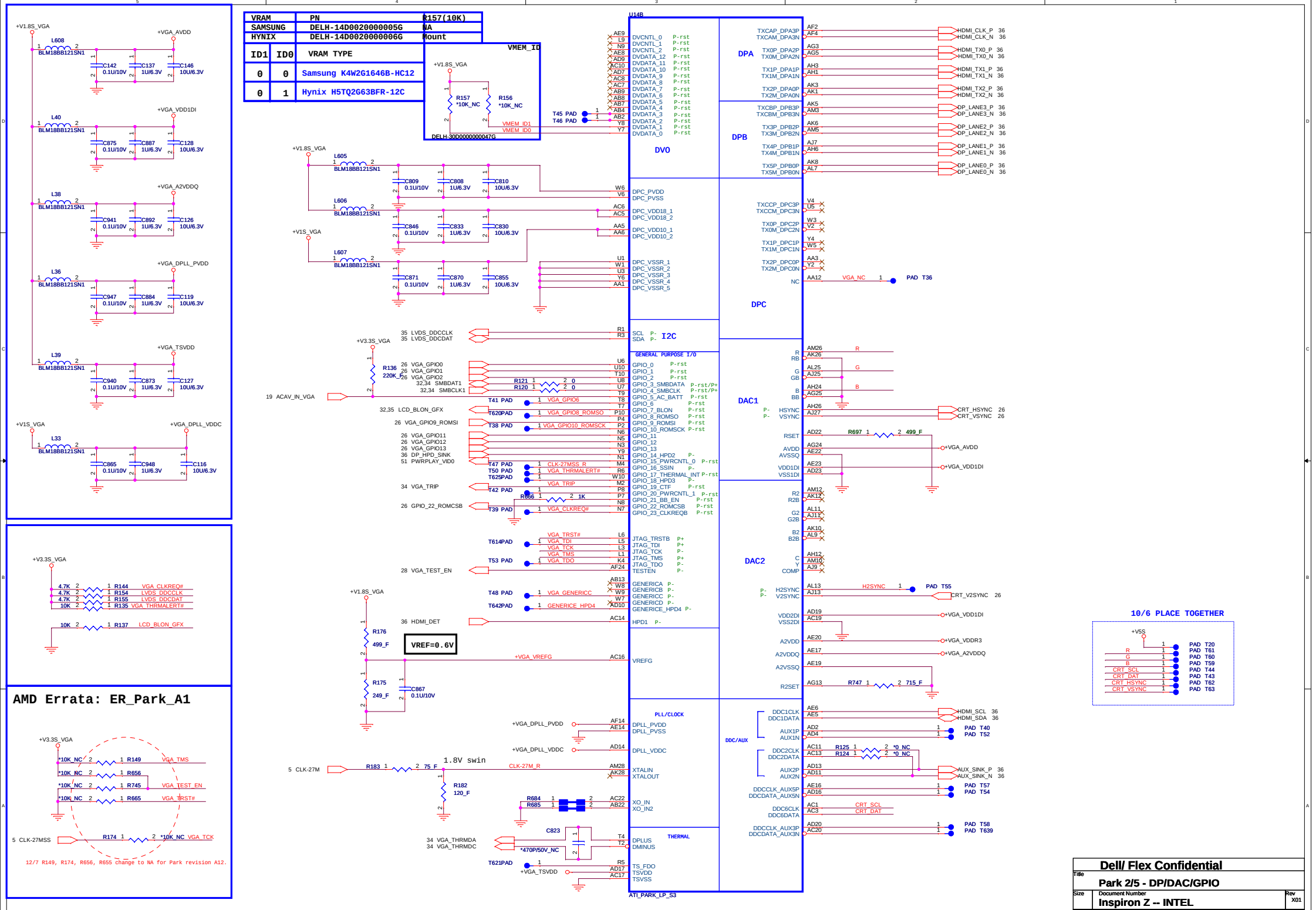
VRAM PN R157(10K)
SAMSUNG DELH-14D0020000005G NA
HYNIX DELH-14D0020000006G Mount
ID1 ID0 VRAM TYPE
0 0 Samsung K4W2G1646B-HC12
0 1 Hynix H5TQ2G63BFR-12C
VMEM_ID
DELH-30D0000000047G
U14B
DVO
DPA
DPB
DPC
I2C
GENERAL PURPOSE I/O
DAC1
DAC2
PLL/CLOCK
THERMAL
DDC/AUX
ATI_PARK_LP_S3
VREF=0.6V
AMD Errata: ER_Park_A1
12/7 R149, R174, R656, R655 change to NA for Park revision A12.
10/6 PLACE TOGETHER
Dell/ Flex Confidential
Park 2/5 - DP/DAC/GPIO
Inspiron Z -- INTEL
Monday, January 18, 2010
Sheet 27 of 57

DIVIDER RESISTORS	DDR3/ GDDR3
MVREF TO 1.8V (Ra)	40.2R
MVREF TO GND (Rb)	100R

For DDR3: 0.7 * VDDR1

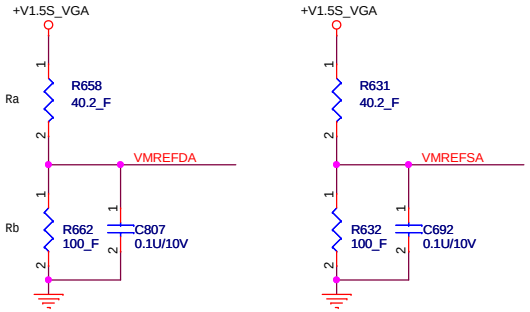

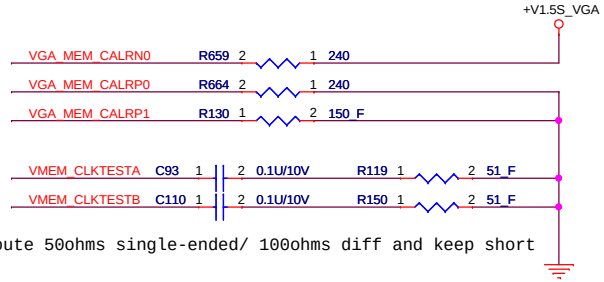

Route 50ohms single-ended/ 100ohms diff and keep short

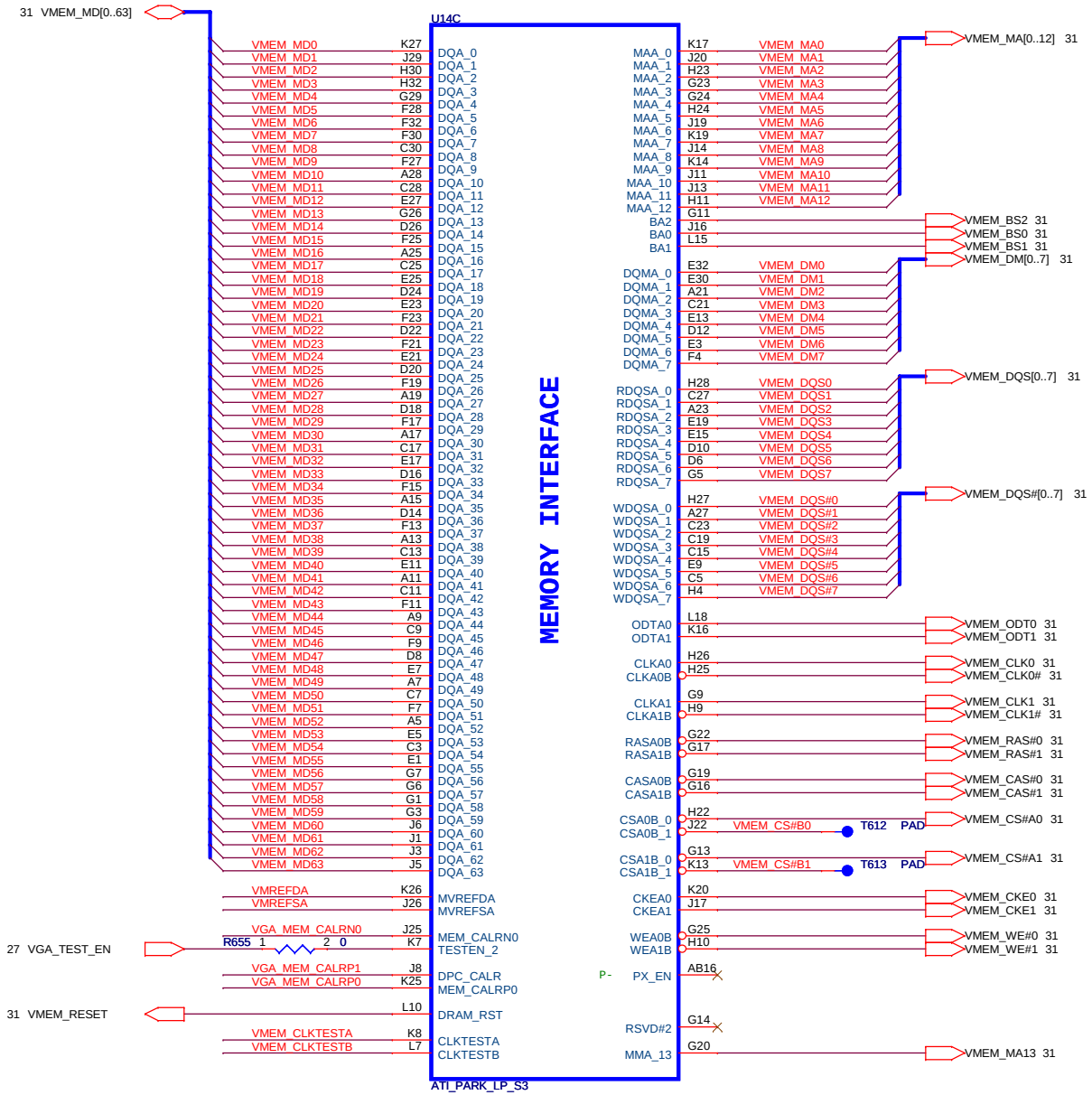

Dell/ Flex Confidential

Title: **Park 3/5 - VRAM_ IF**

Size | Document Number: **Inspiron Z -- INTEL** | Rev: X01

Date: Monday, January 18, 2010 | Sheet 28 of 57

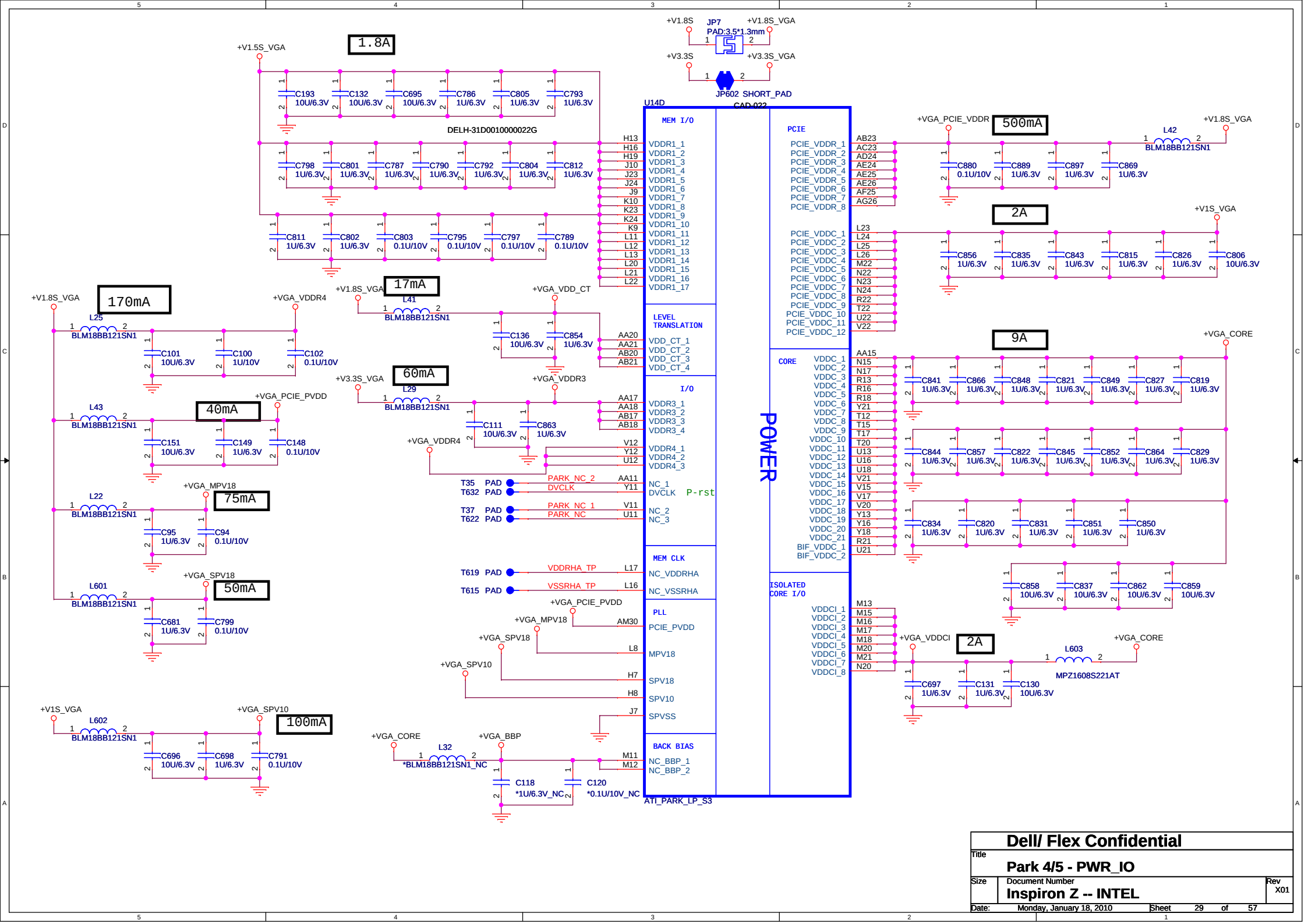

Dell/ Flex Confidential

Title	Park 4/5 - PWR_IO
Size	
Document Number	Inspiron Z -- INTEL
Rev	X01
Date: Monday, January 18, 2010	Sheet 29 of 57

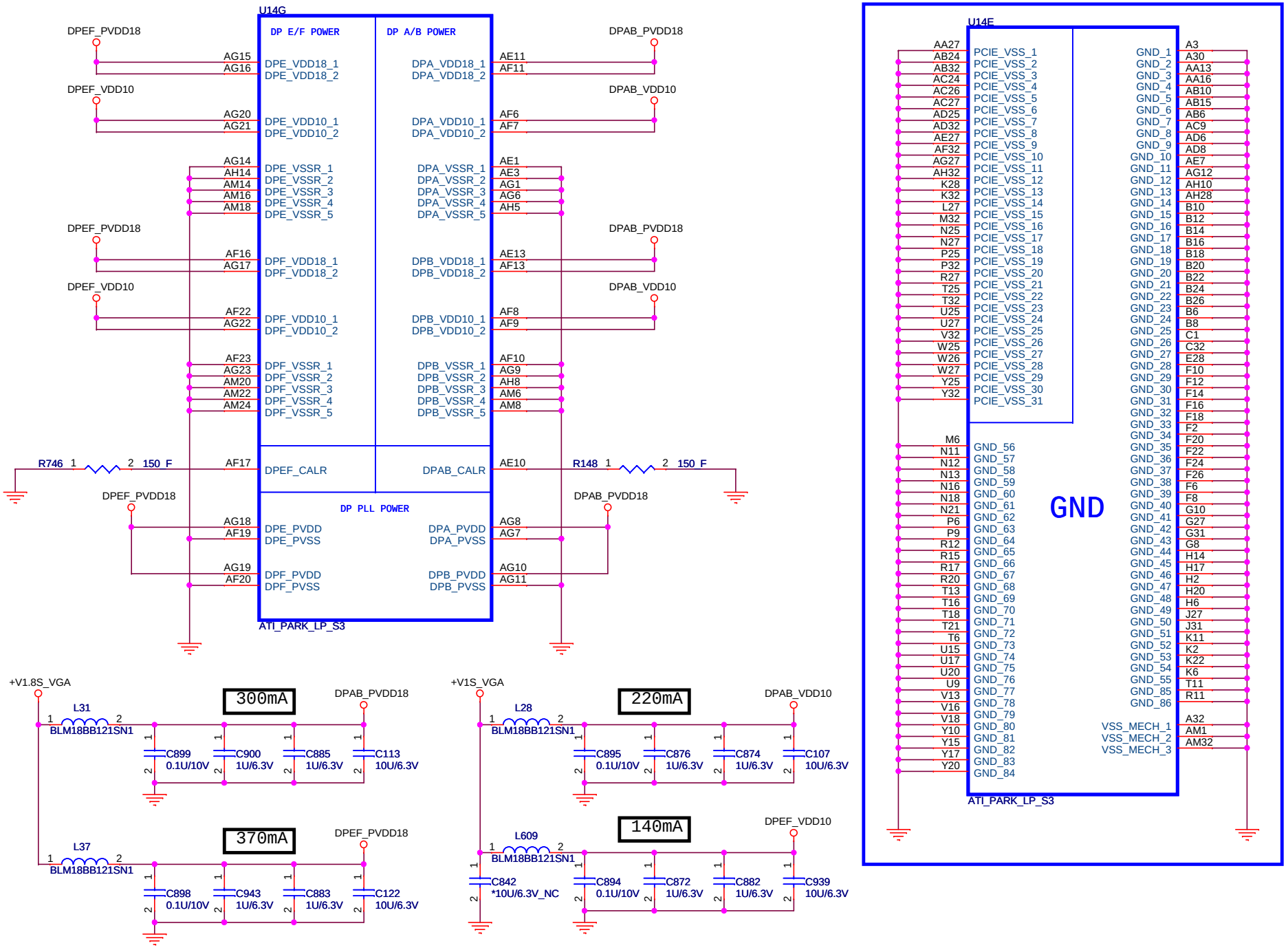

Dell/ Flex Confidential	
Title	Park 5/5 - PWR_DAC/GND
Size	Document Number: Inspiron Z -- INTEL
Rev	X01
Date: Monday, January 18, 2010	Sheet 30 of 57

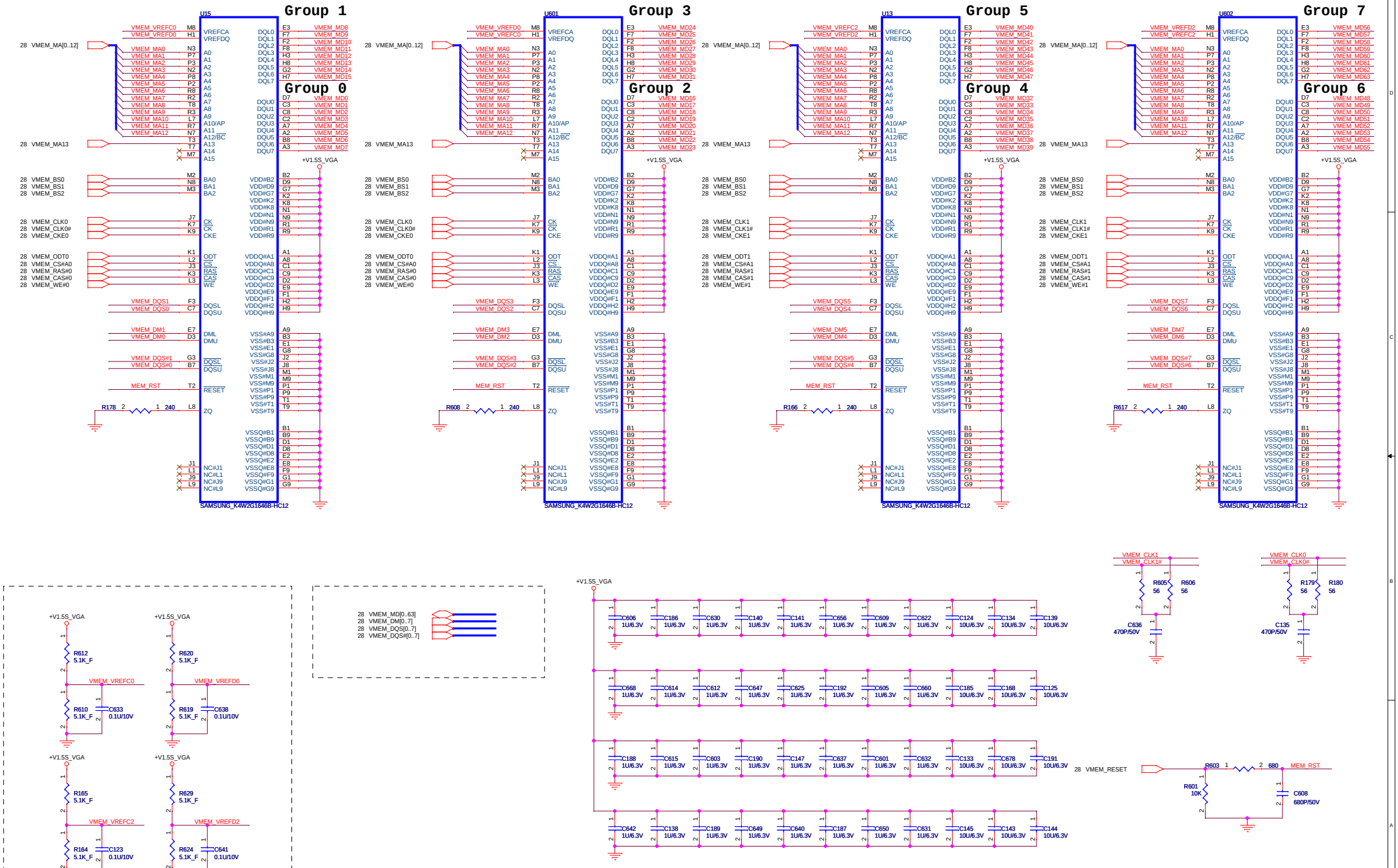

Dell/ Flex Confidential

Title: VRAM 128Mx16		
Size	Document Number: Inspiron Z -- INTEL	Rev: X01
Date: Monday, January 18, 2010	Sheet 31 of 57	

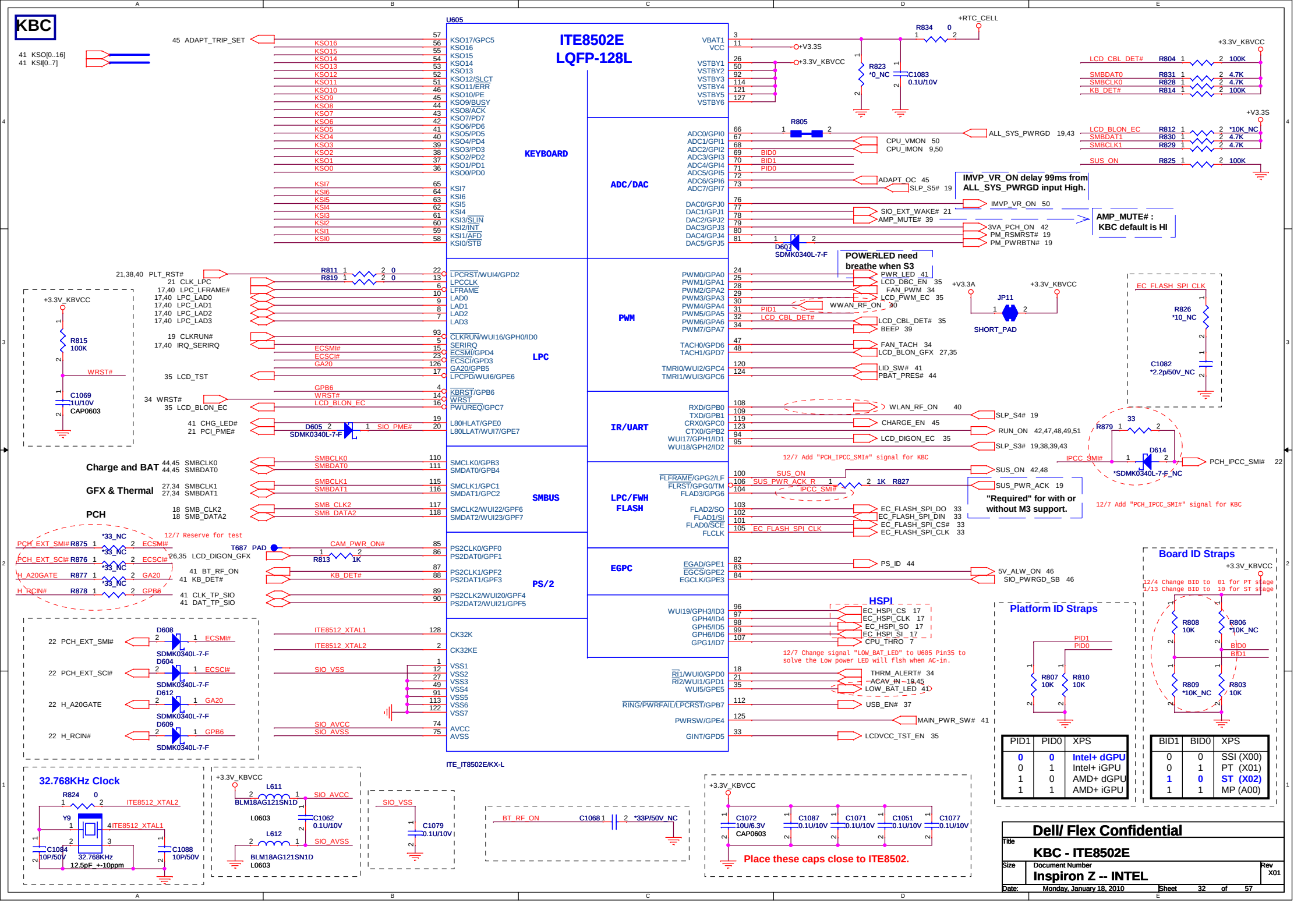

PID1	PID0	XPS
0	0	Intel+ dGPU
0	1	Intel+ iGPU
1	0	AMD+ dGPU
1	1	AMD+ iGPU

BID1	BID0	XPS
0	0	SSI (X00)
0	1	PT (X01)
1	0	ST (X02)
1	1	MP (A00)

2Mbit (256K Byte), SPI

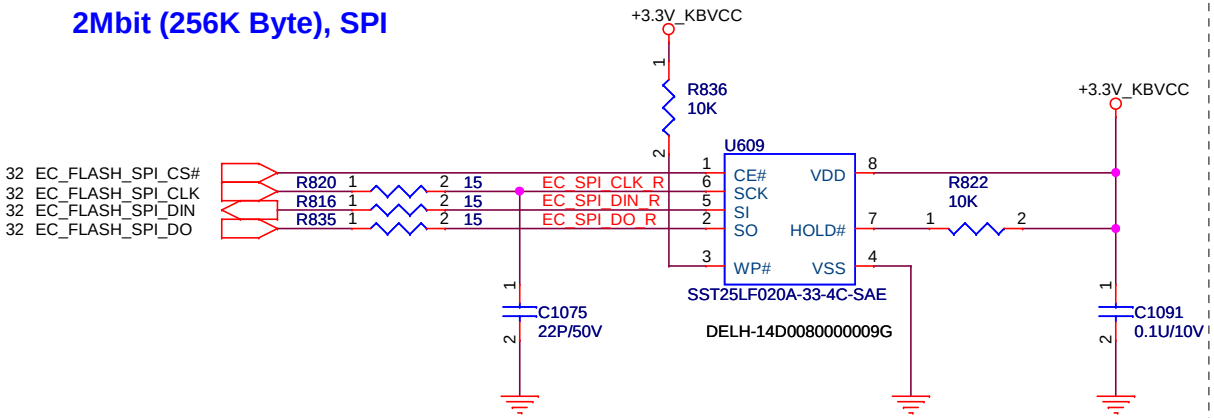

RFI

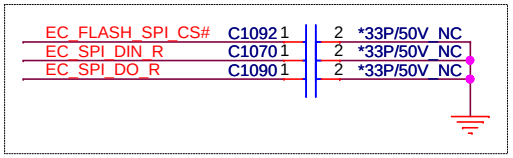

RTC BATTERY

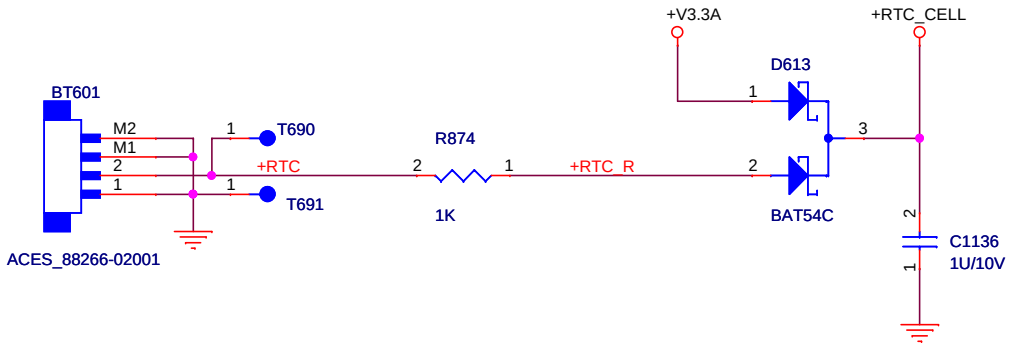

Dell/ Flex Confidential

Title	RTC BAT/ EC_ROM	
Size	Document Number: Inspiron Z -- INTEL	Rev X01
Date: Monday, January 18, 2010	Sheet 33 of 57	

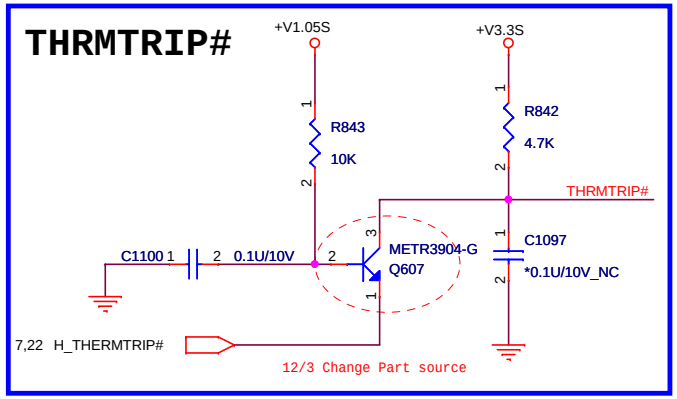

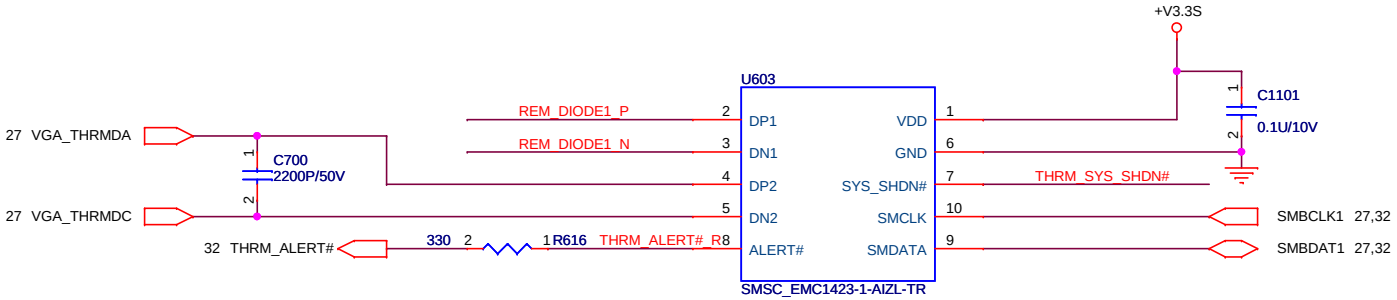

SM bus Address: 100_1100b

Table 5.2 $\overline{\text{SYS_SHDN}}$ Threshold Temperature

$\overline{\text{SYS_SHD}}$ PULL-UP / $\overline{\text{ALERT}}$ PULL-UP	4.7K OHM ±10%	6.8K OHM ±10%	10K OHM ±10%	15K OHM ±10%	22K OHM ±10%	33K OHM ±10%
4.7K OHM ±10%	77°C	83°C	89°C	95°C	101°C	107°C
6.8K OHM ±10%	78°C	84°C	90°C	96°C	102°C	108°C
10K OHM ±10%	79°C	85°C	91°C	97°C	103°C	109°C
15K OHM ±10%	80°C	86°C	92°C	98°C	104°C	110°C
22K OHM ±10%	81°C	87°C	93°C	99°C	105°C	111°C
33K OHM ±10%	82°C	88°C	94°C	100°C	106°C	112°C

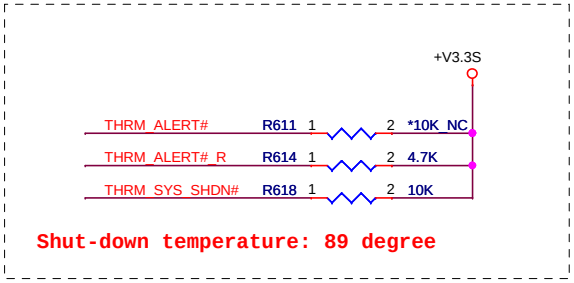

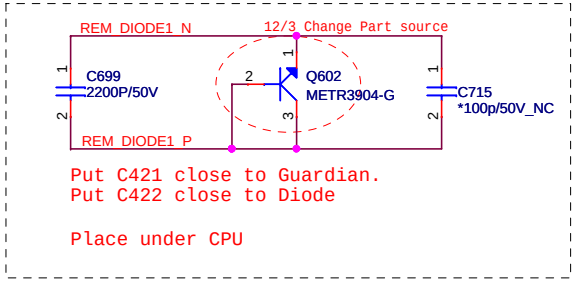

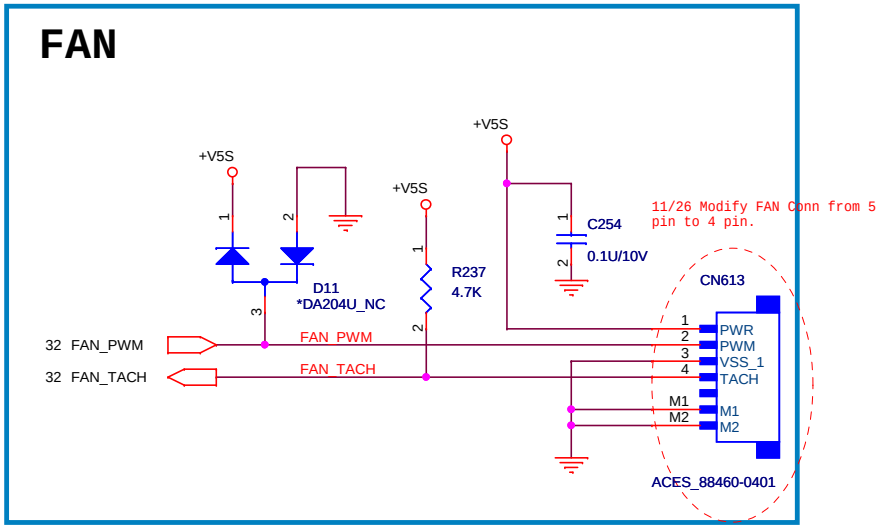

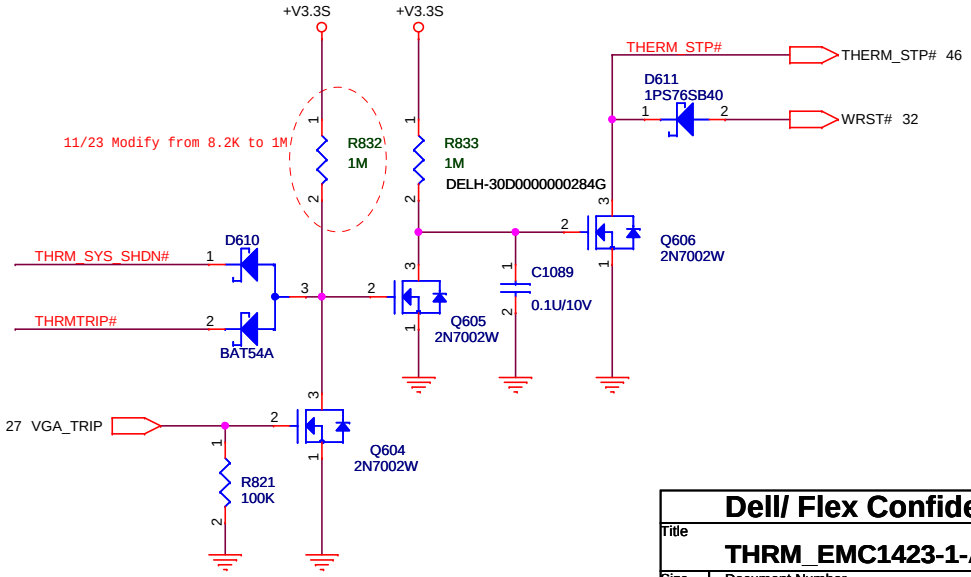

Dell/ Flex Confidential		
Title: THRM_EMC1423-1-AIZL		
Size	Document Number: Inspiron Z -- INTEL	Rev X01
Date: Monday, January 18, 2010	Sheet 34 of 57	

LVDS

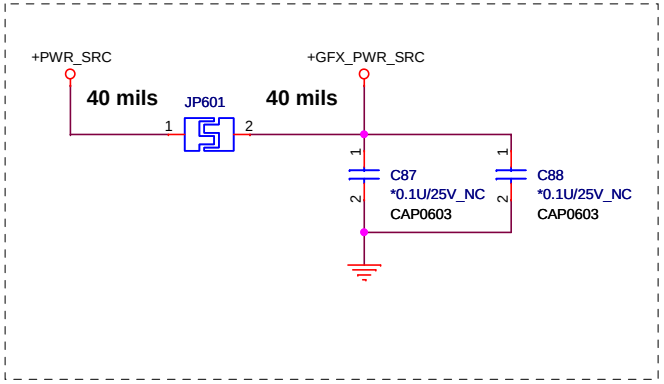

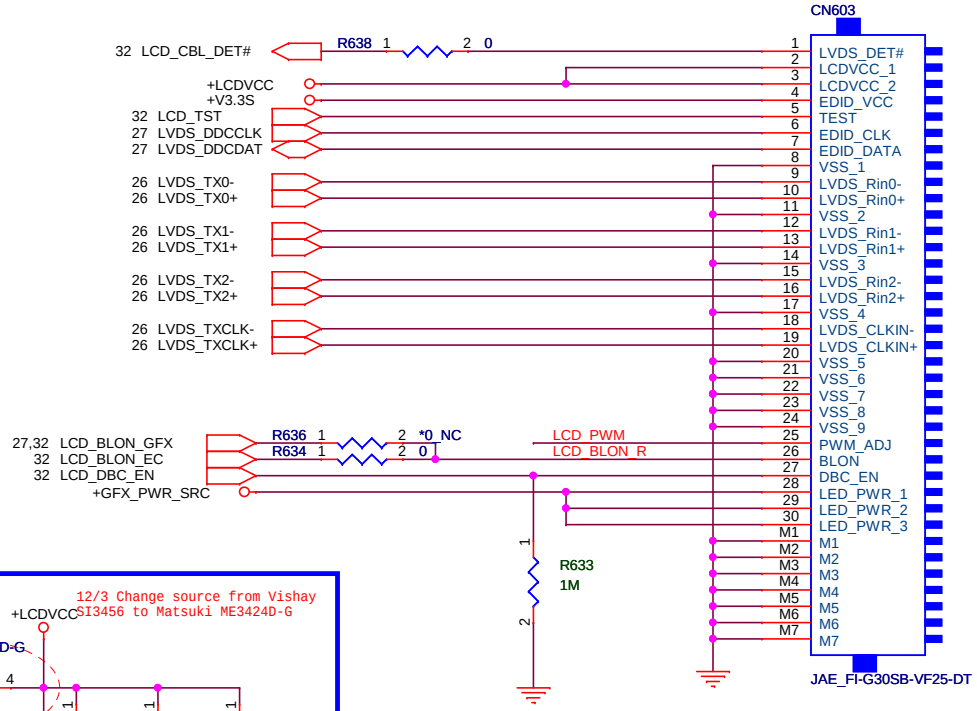

LCD_DIGON

Support the new imbeded diagnostics.

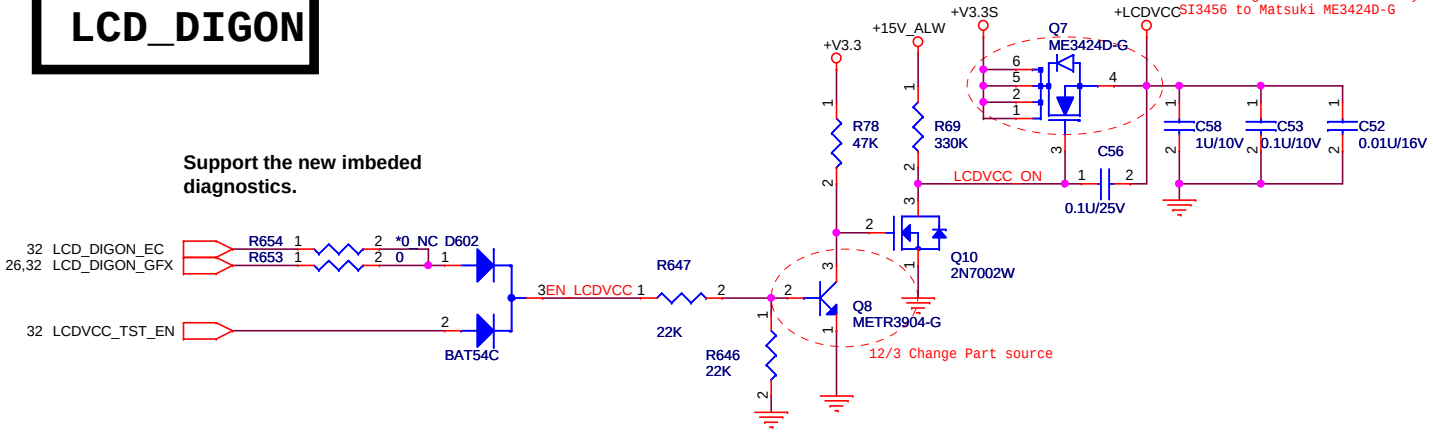

EMI

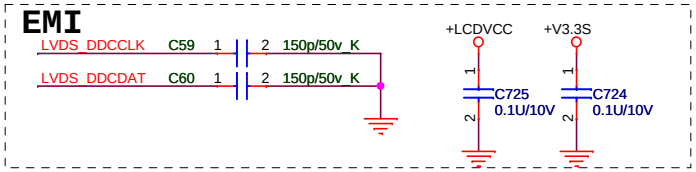

WEBCAM

12/3 Mount L15, & NA R59, R55 for EMI solution.

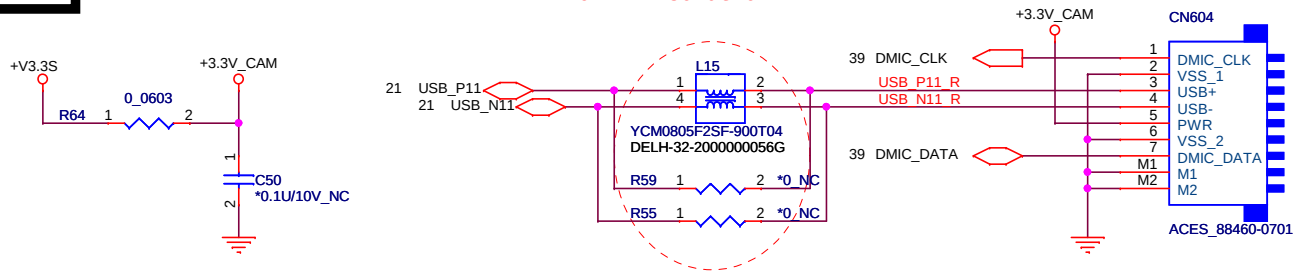

LCD_PWM

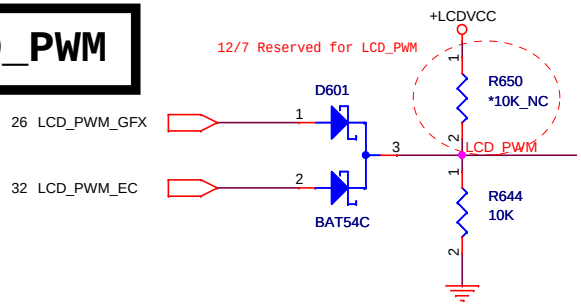

Dell/ Flex Confidential

Title	LVDS / WEBCAM	
Size	Document Number: Inspiron Z -- INTEL	Rev X01
Date: Monday, January 18, 2010	Sheet 35 of 57	

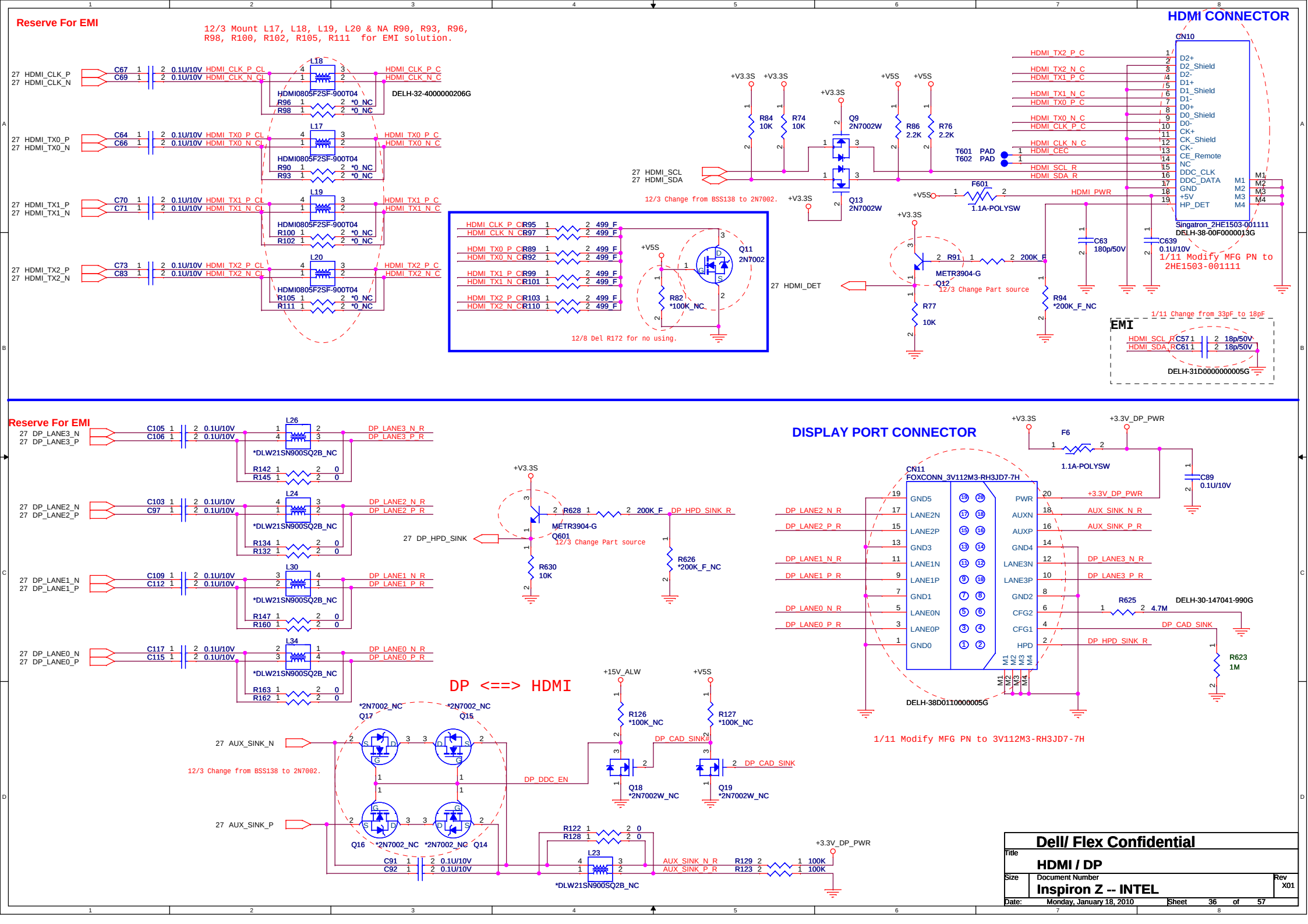
Reserve For EMI
12/3 Mount L17, L18, L19, L20 & NA R90, R93, R96, R98, R100, R102, R105, R111 for EMI solution.
HDMI CONNECTOR
CN10
Singatron_2HE1503-001111
DELH-38-00F0000013G
1/11 Modify MFG PN to 2HE1503-001111
27 HDMI_CLK_P
27 HDMI_CLK_N
27 HDMI_TX0_P
27 HDMI_TX0_N
27 HDMI_TX1_P
27 HDMI_TX1_N
27 HDMI_TX2_P
27 HDMI_TX2_N
HDMI0805F2SF-900T04
DELH-32-4000000206G
27 HDMI_SCL
27 HDMI_SDA
12/3 Change from BSS138 to 2N7002.
Q9 2N7002W
Q13 2N7002W
Q11 2N7002
12/8 Del R172 for no using.
27 HDMI_DET
METR3904-G
Q12
12/3 Change Part source
F601
1.1A-POLYSW
EMI
1/11 Change from 33pF to 18pF
DELH-31D0000000005G
Reserve For EMI
27 DP_LANE3_N
27 DP_LANE3_P
27 DP_LANE2_N
27 DP_LANE2_P
27 DP_LANE1_N
27 DP_LANE1_P
27 DP_LANE0_N
27 DP_LANE0_P
*DLW21SN900SQ2B_NC
27 DP_HPD_SINK
Q601
DISPLAY PORT CONNECTOR
CN11
FOXCONN_3V112M3-RH3JD7-7H
DELH-38D0110000005G
DELH-30-147041-990G
1/11 Modify MFG PN to 3V112M3-RH3JD7-7H
DP <==> HDMI
27 AUX_SINK_N
27 AUX_SINK_P
12/3 Change from BSS138 to 2N7002.
Q17
Q15
Q16
Q14
Q18 *2N7002W_NC
Q19 *2N7002W_NC
DP_DDC_EN
DP_CAD_SINK
AUX_SINK_N_R
AUX_SINK_P_R
Dell/ Flex Confidential
Title
HDMI / DP
Size
Document Number
Inspiron Z -- INTEL
Rev
X01
Date: Monday, January 18, 2010
Sheet 36 of 57

USB Jack x 2

12/3 Mount L45, L613, & NA R238, R239, R844, R845 for EMI solution.

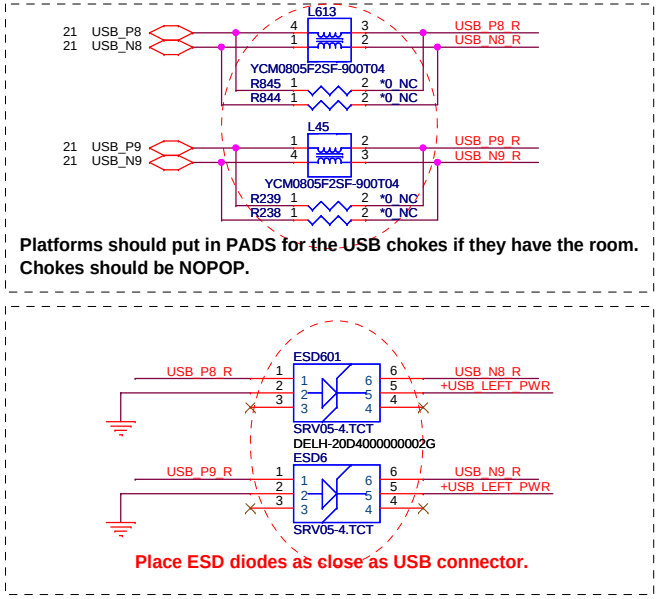

USB POWER SW

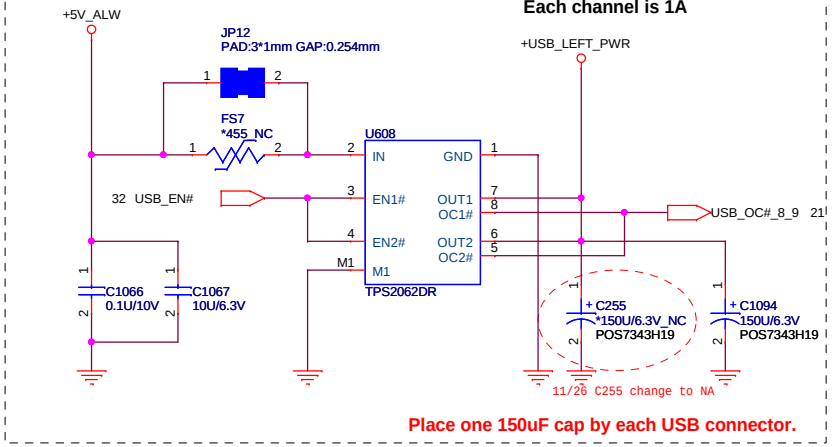

USB CONN

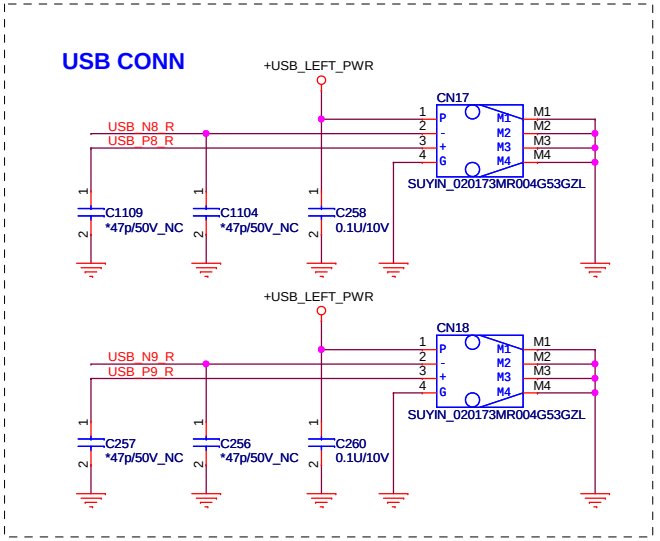

USB POWER SW

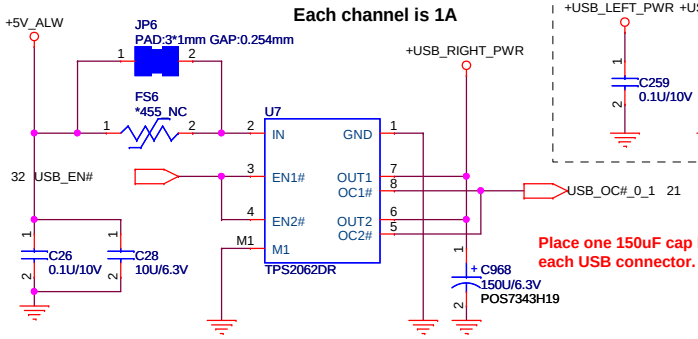

EMI

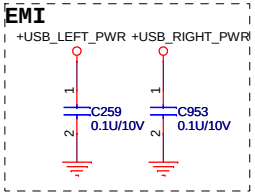

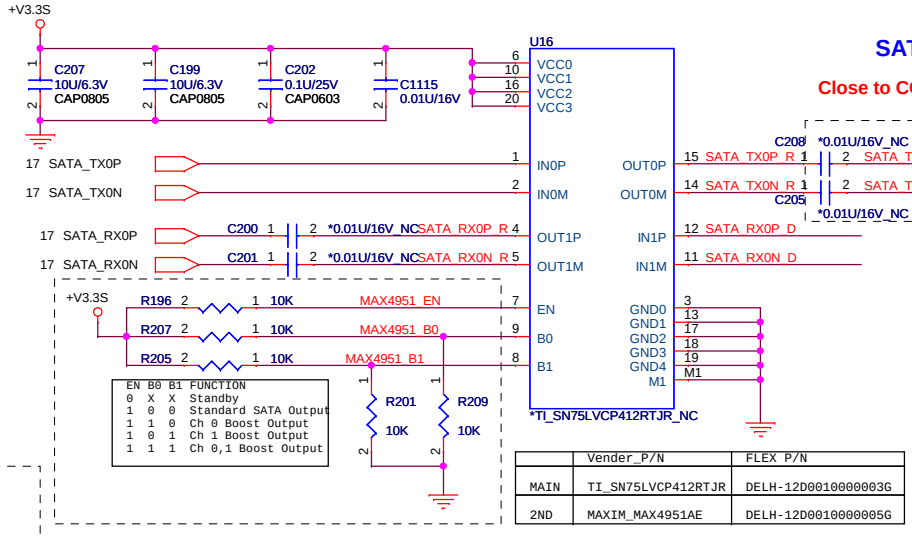

EN	B0	B1	FUNCTION
0	X	X	Standby
1	0	0	Standard SATA Output
1	1	0	Ch 0 Boost Output
1	0	1	Ch 1 Boost Output
1	1	1	Ch 0,1 Boost Output

	Vender_P/N	FLEX P/N
MAIN	TI_SN75LVCP412RTJR	DELH-12D0010000003G
2ND	MAXIM_MAX4951AE	DELH-12D0010000005G

SATA HDD Connector

Close to CONN

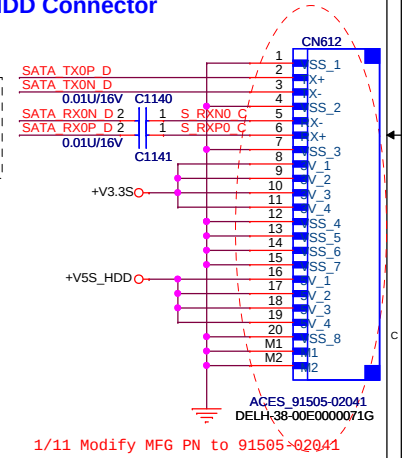

1/11 Modify MFG PN to 91505-02041

ESATA/B CONN

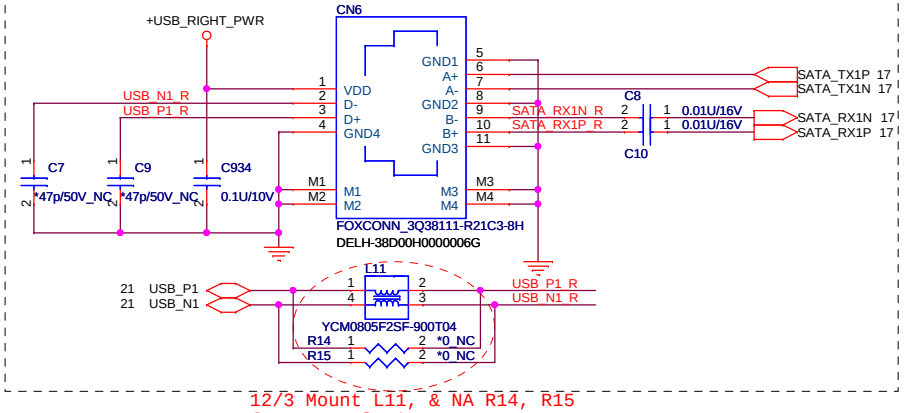

12/3 Mount L11, & NA R14, R15 for EMI solution.

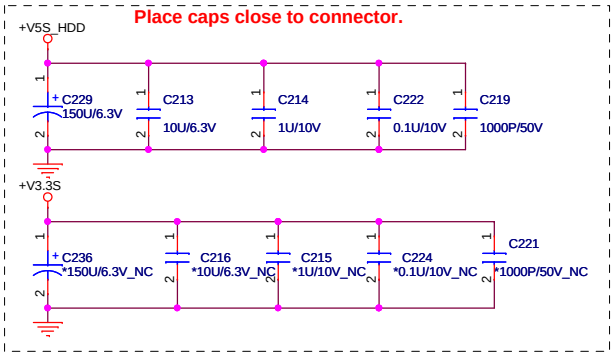

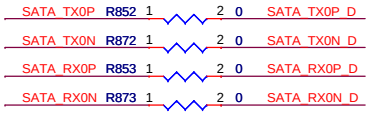

Dell/ Flex Confidential

Title	HDD / USB / eSATA
Size	Document Number: Inspiron Z -- INTEL
Rev	X01
Date:	Monday, January 18, 2010
Sheet	37 of 57

LAN/ Card Reader

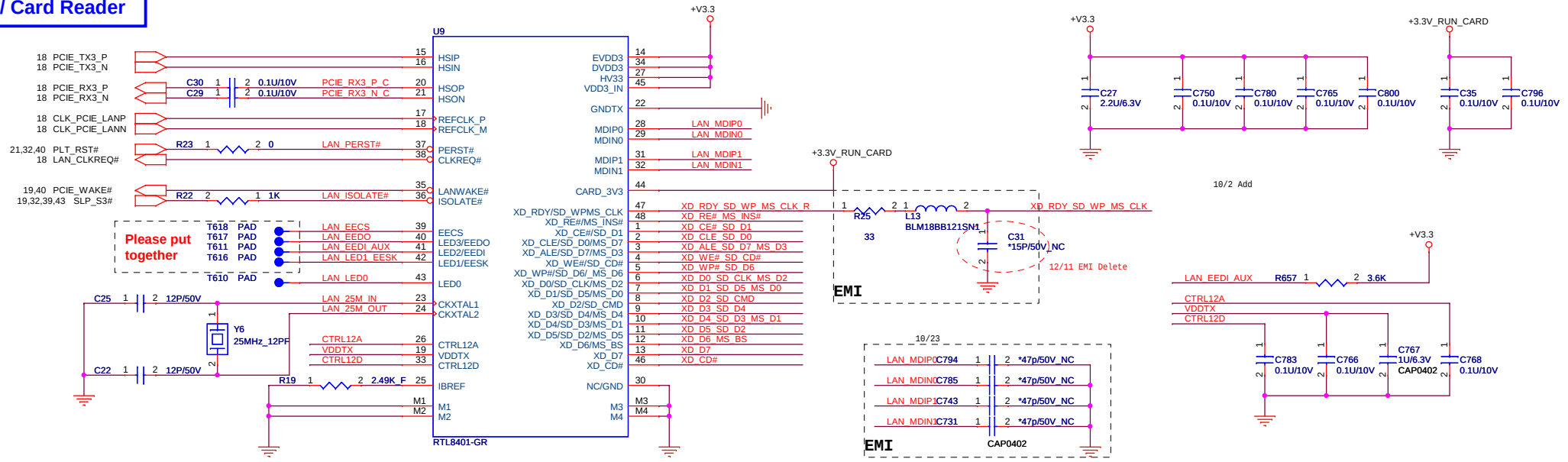

TRANSFORMER

Layout Note:
Route MDI+/- pairs with 100 ohm differential trace immpedance.

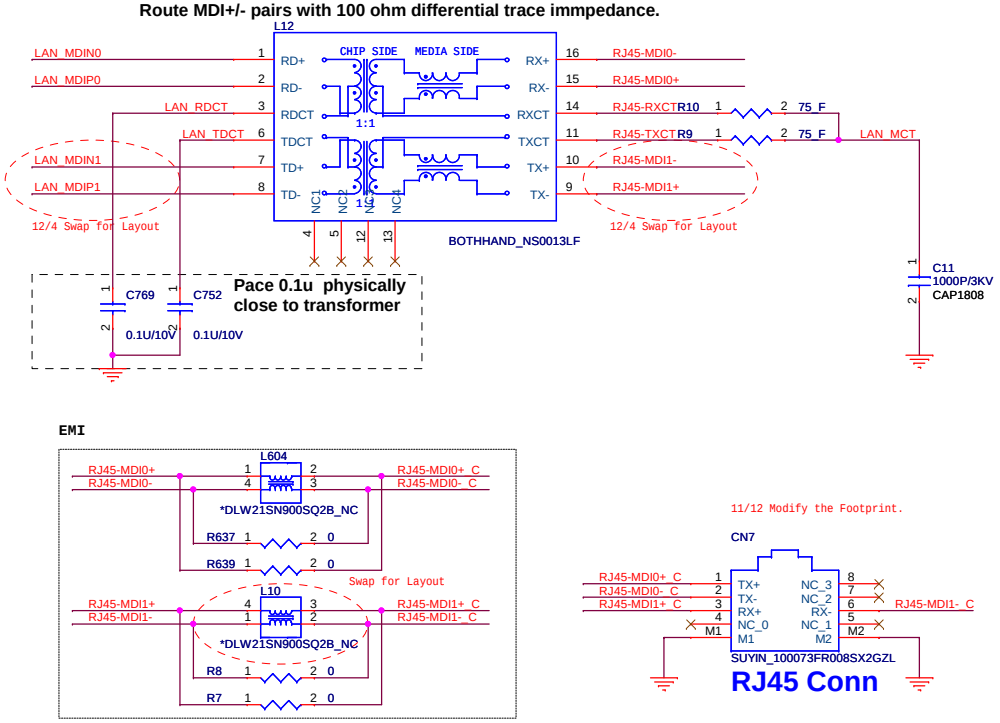

Card Reader Conn

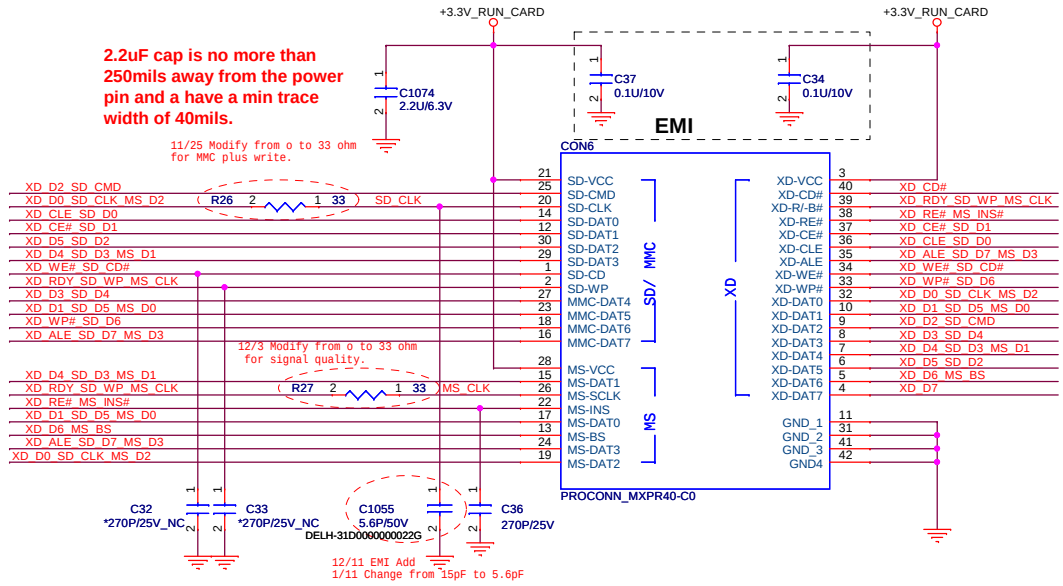

Title	**Dell/ Flex Confidential**	
	LAN/ Media_RTL8401	
Size	Document Number: **Inspiron Z -- INTEL**	Rev X01
Date: Monday, January 18, 2010	Sheet 38 of 57	

AZALIA (HD) CODEC
SPK & HP AMP

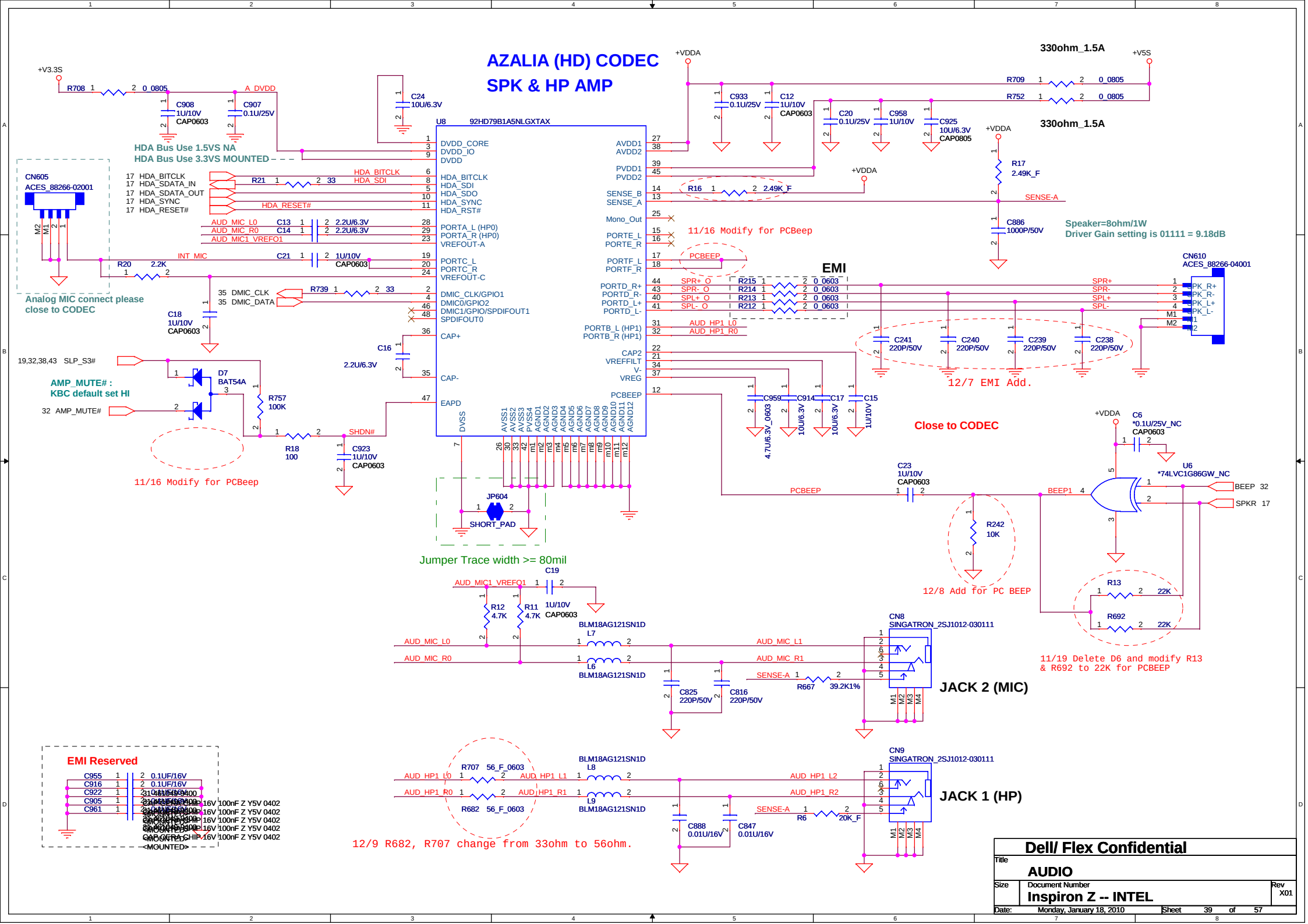

Dell/ Flex Confidential	
Title	AUDIO
Size	Document Number: Inspiron Z -- INTEL
Rev	X01
Date: Monday, January 18, 2010	Sheet 39 of 57

MiniCard WLAN

0929 update footprint

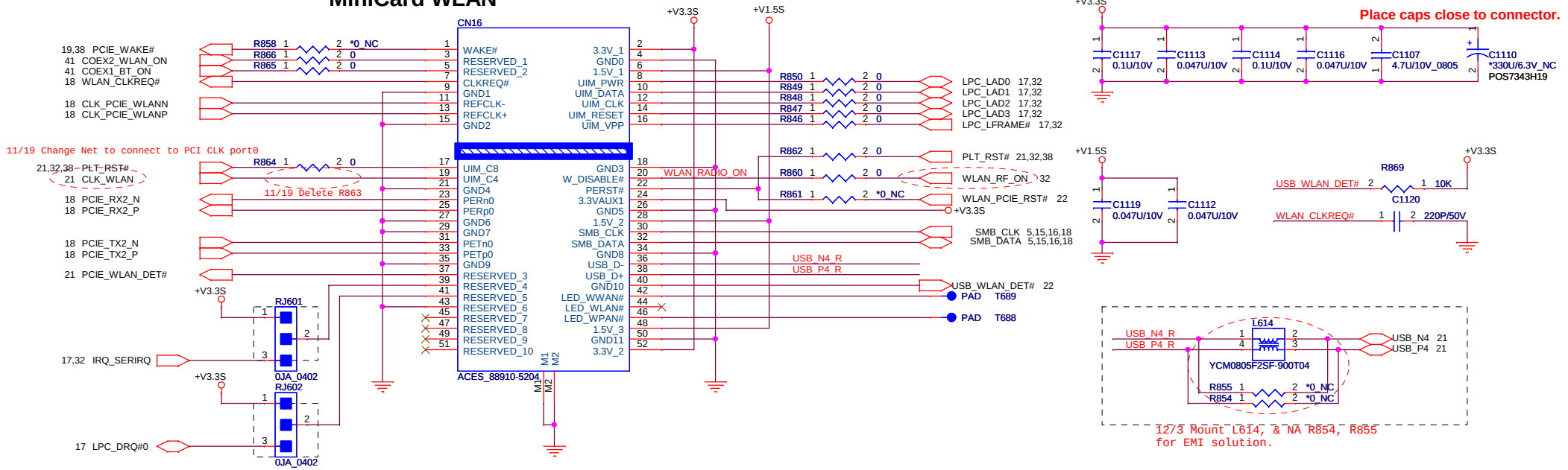

MiniCard WWAN

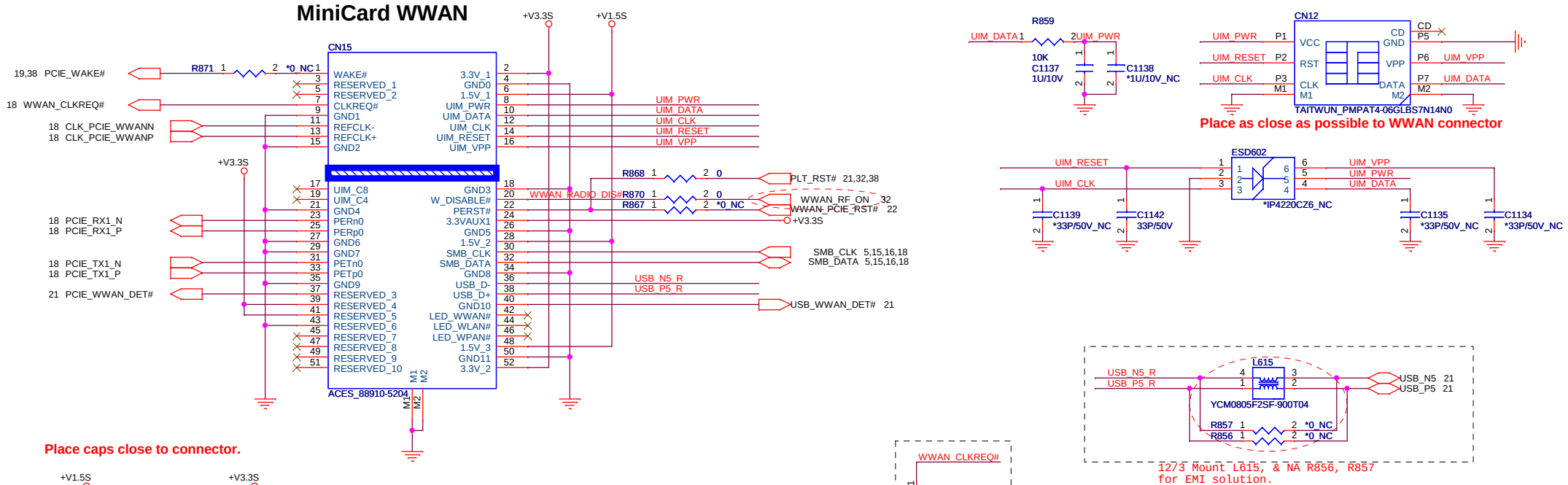

Dell/ Flex Confidential		
Title: WLAN / WWAN		
Size	Document Number: Inspiron Z -- INTEL	Rev X01
Date: Monday, January 18, 2010	Sheet 40 of 57	

Indicator Board

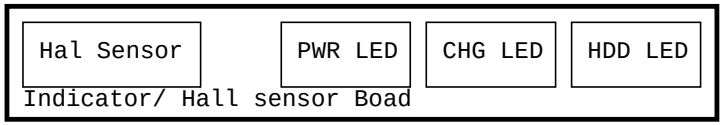

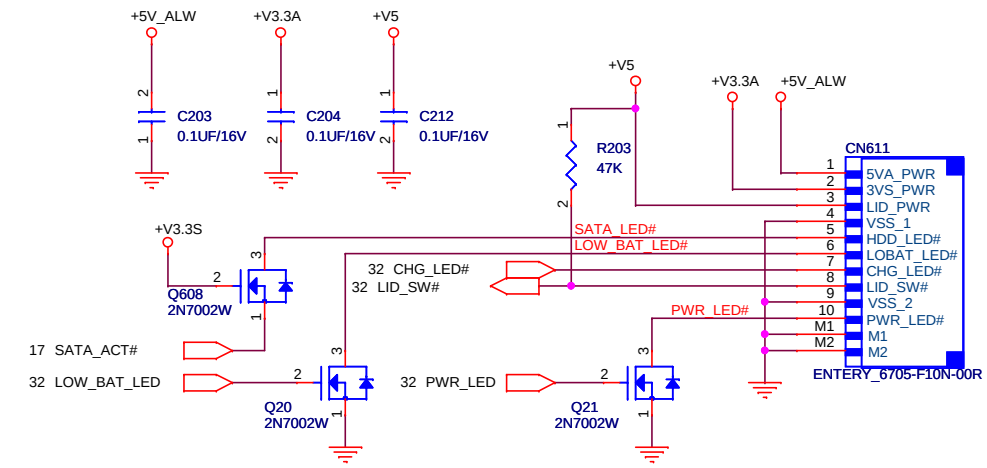

KB

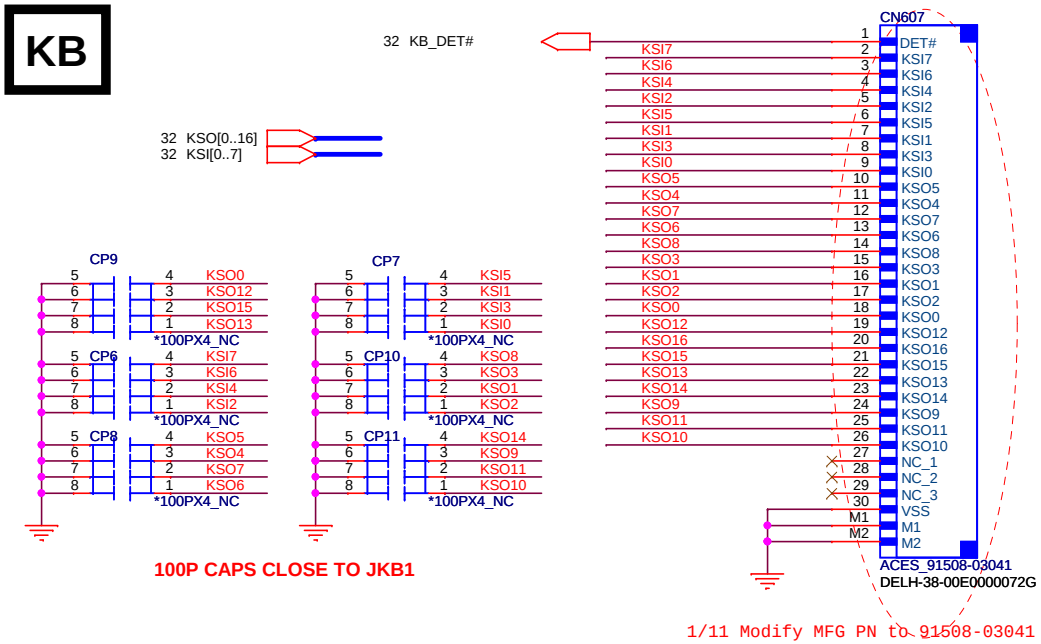

Power Button Board

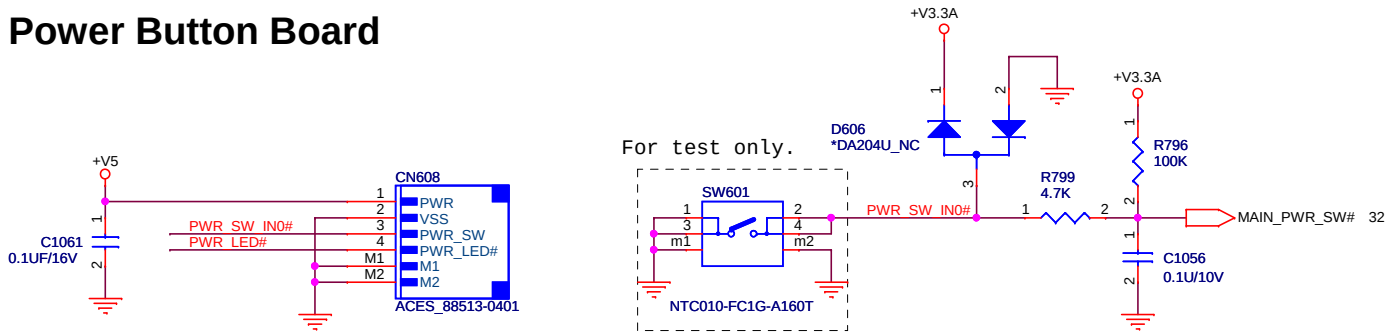

TP

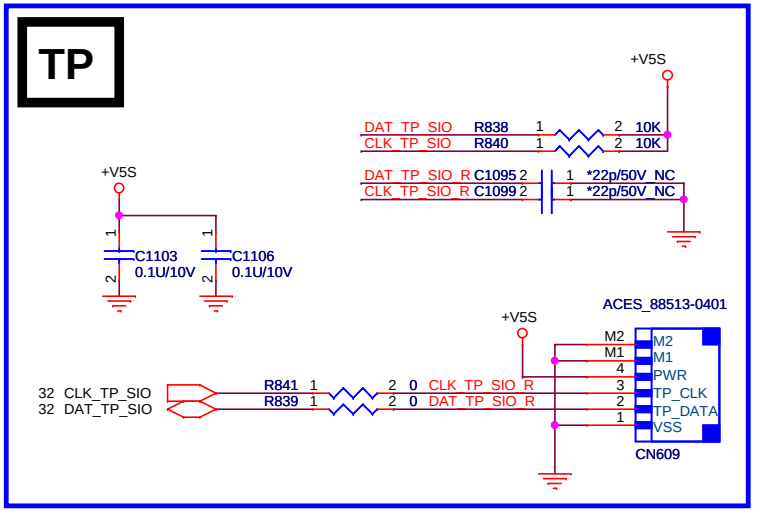

BT

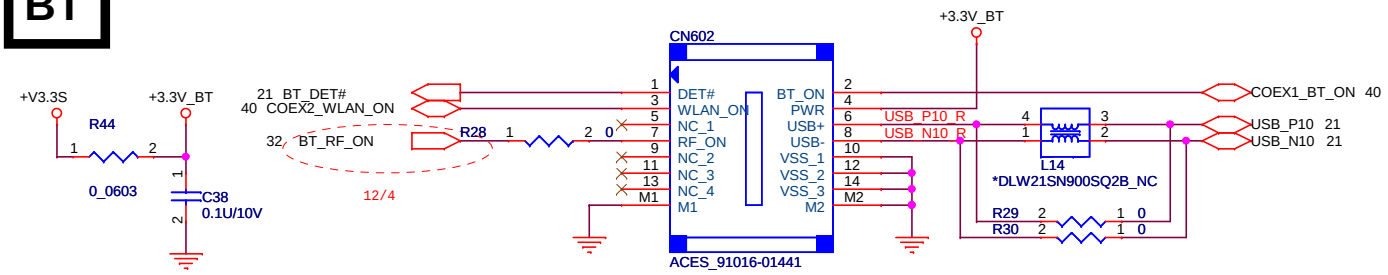

Dell/ Flex Confidential

Title	BT / KB / TP / LED / SW	
Size	Document Number: Inspiron Z -- INTEL	Rev X01
Date: Monday, January 18, 2010	Sheet 41 of 57	

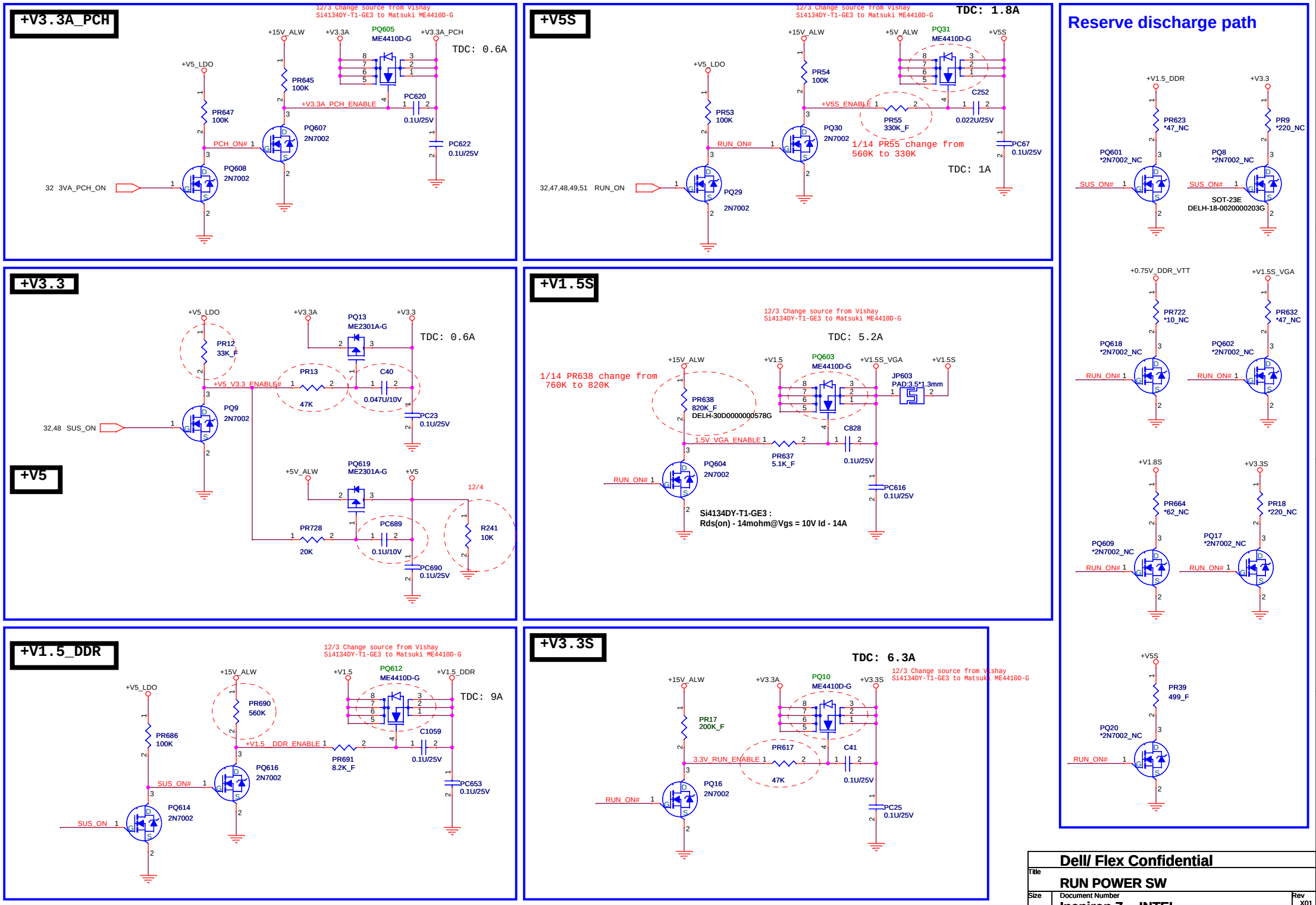

Dell/ Flex Confidential		
Title: RUN POWER SW		
Size	Document Number: Inspiron Z -- INTEL	Rev X01
Date: Monday, January 18, 2010	Sheet 42 of 57	

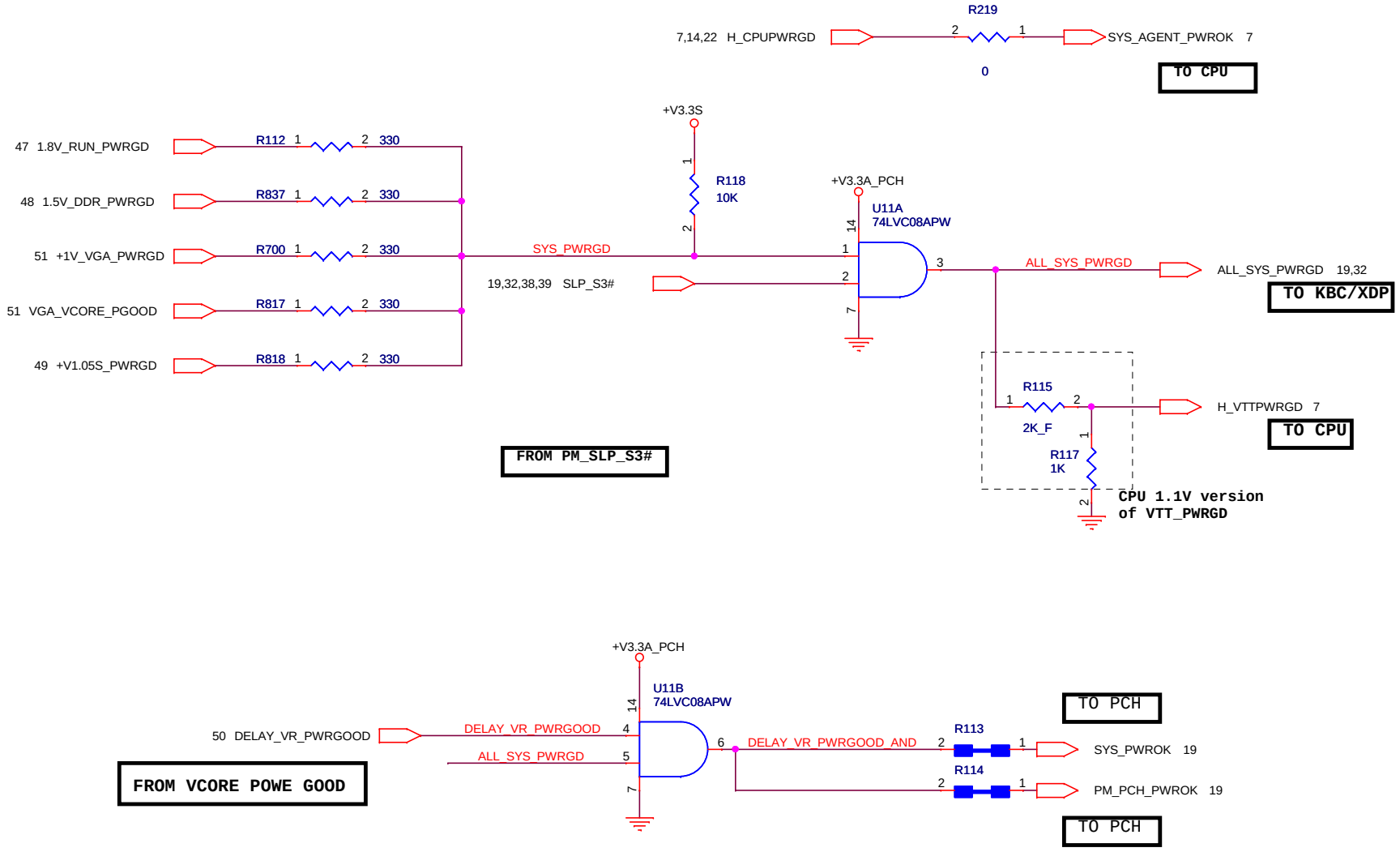

Dell/ Flex Confidential		
Title: System Reset Circuit		
Size	Document Number: Inspiron Z -- INTEL	Rev X01
Date: Monday, January 18, 2010	Sheet 43 of 57	

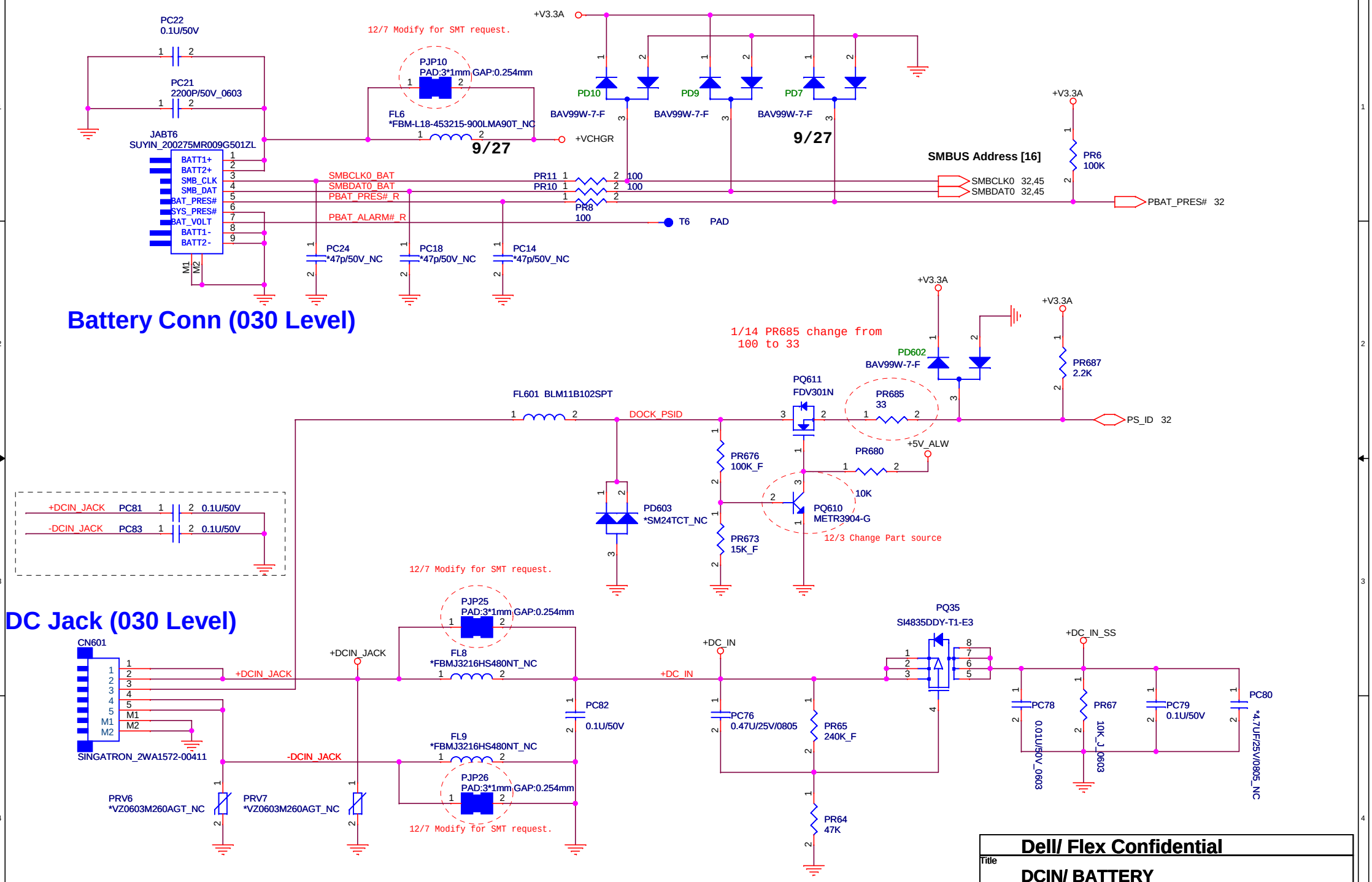

Dell/ Flex Confidential		
Title: DCIN/ BATTERY		
Size	Document Number: Inspiron Z -- INTEL	Rev X01
Date: Monday, January 18, 2010	Sheet 44 of 57	

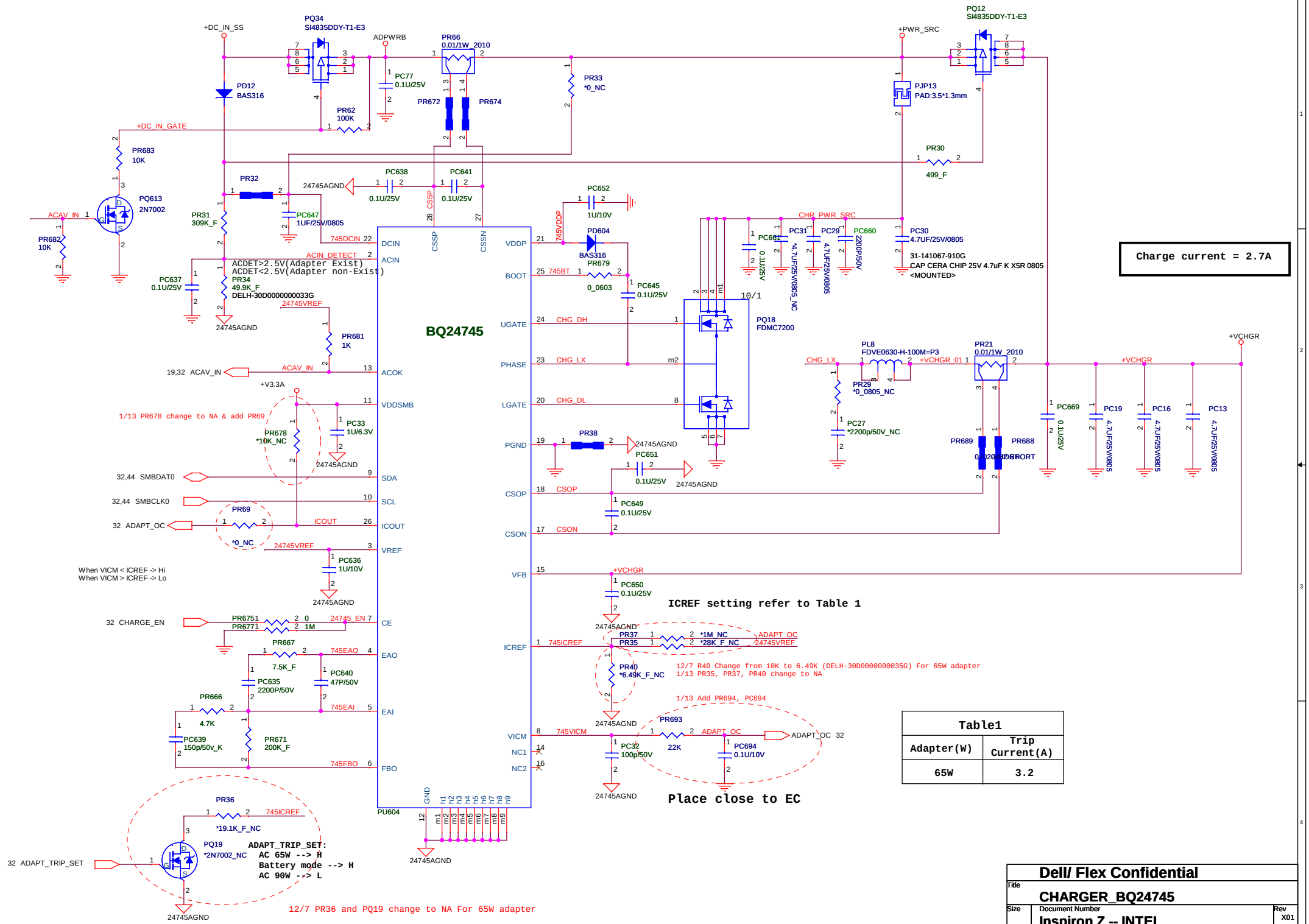

Table1	
Adapter(W)	Trip Current(A)
65W	3.2

Dell/ Flex Confidential

Title: **CHARGER_BQ24745**

Size | Document Number: **Inspiron Z -- INTEL** | Rev: X01

Date: Monday, January 18, 2010 | Sheet 45 of 57

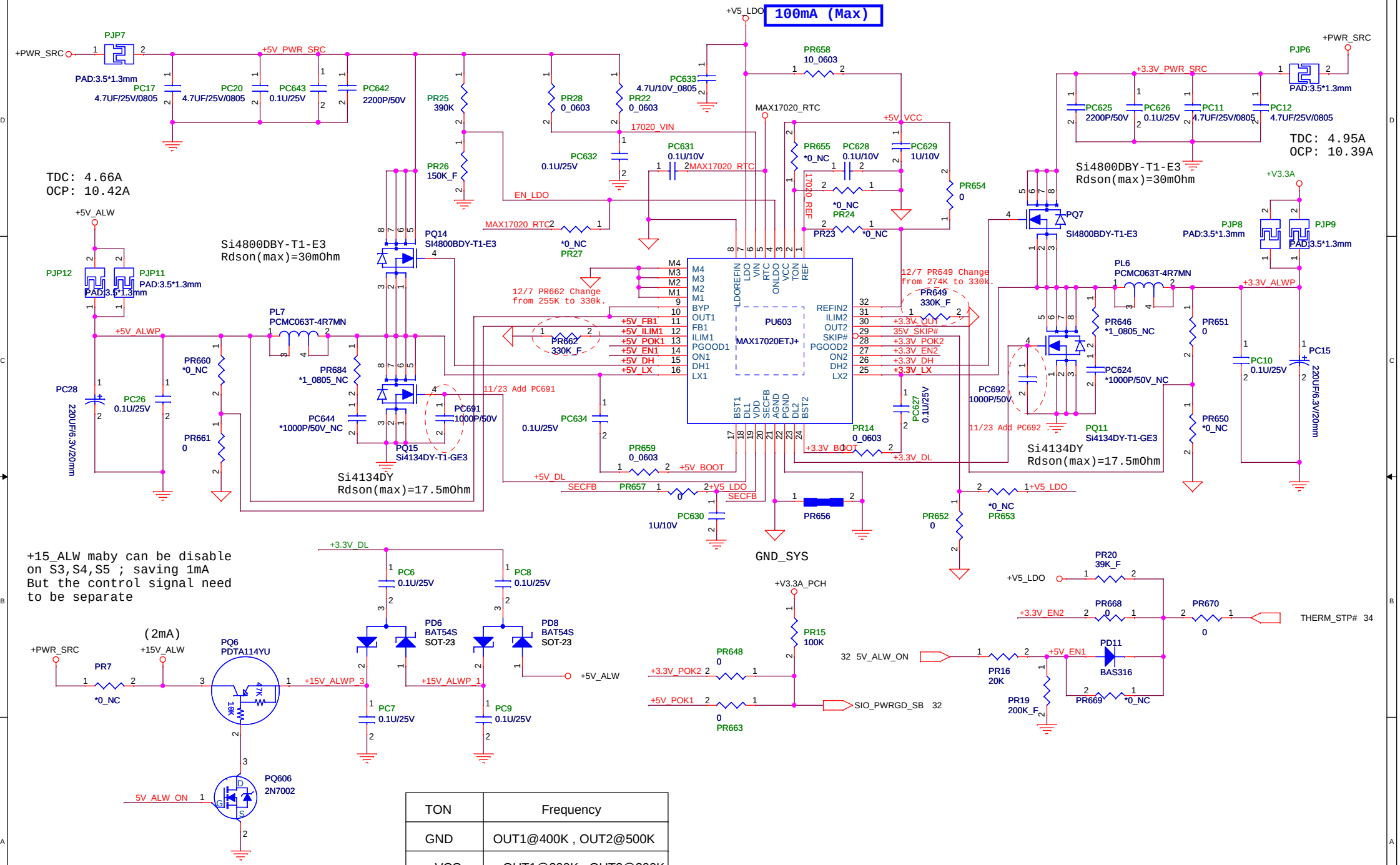

TON	Frequency
GND	OUT1@400K , OUT2@500K
VCC	OUT1@200K , OUT2@300K
OPEN	OUT1@400K , OUT2@300K

Dell/ Flex Confidential

Title: **SYS 5V/3V(MAX17020)**

Size | Document Number: **Inspiron Z -- INTEL** | Rev: X01

Date: Monday, January 18, 2010 | Sheet 46 of 57

+V1.8S

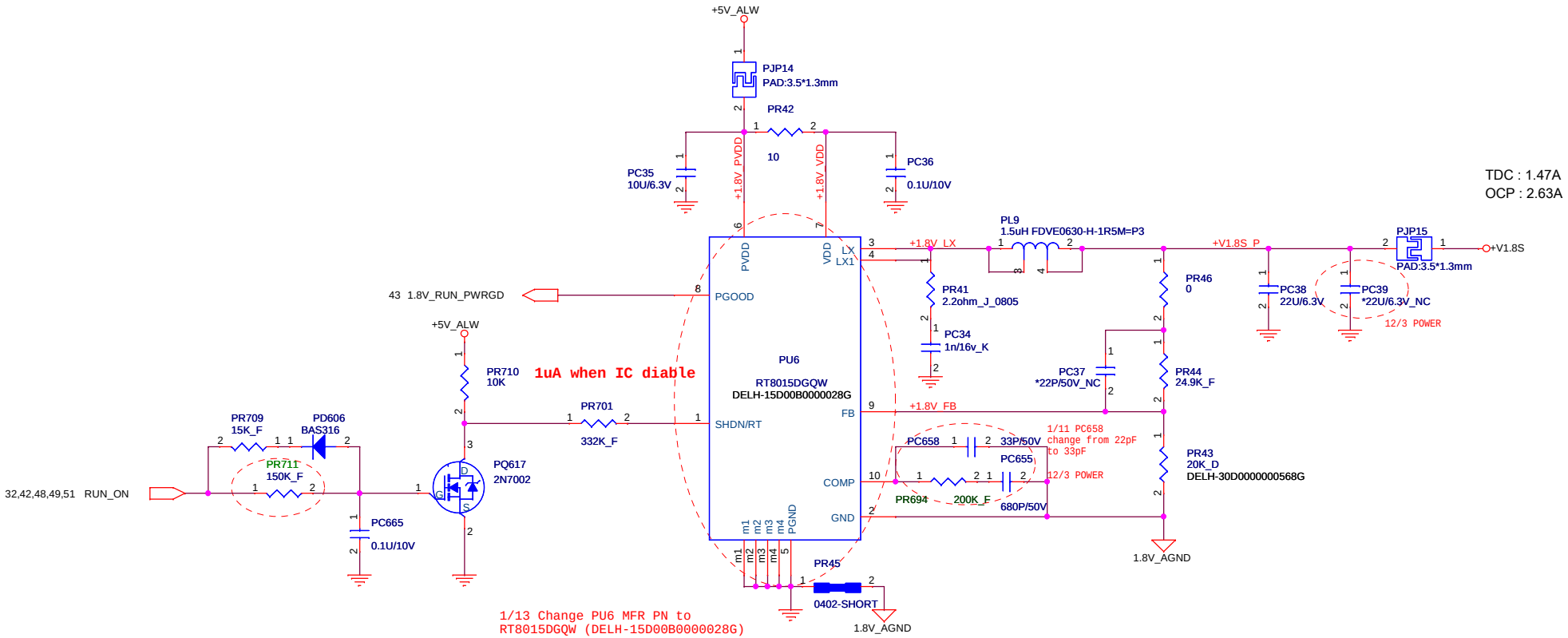

Dell/ Flex Confidential		
Title: +V1.8S_RT8015B		
Size	Document Number: Inspiron Z -- INTEL	Rev: X01
Date: Monday, January 18, 2010	Sheet 47 of 57	

1.5VDDR

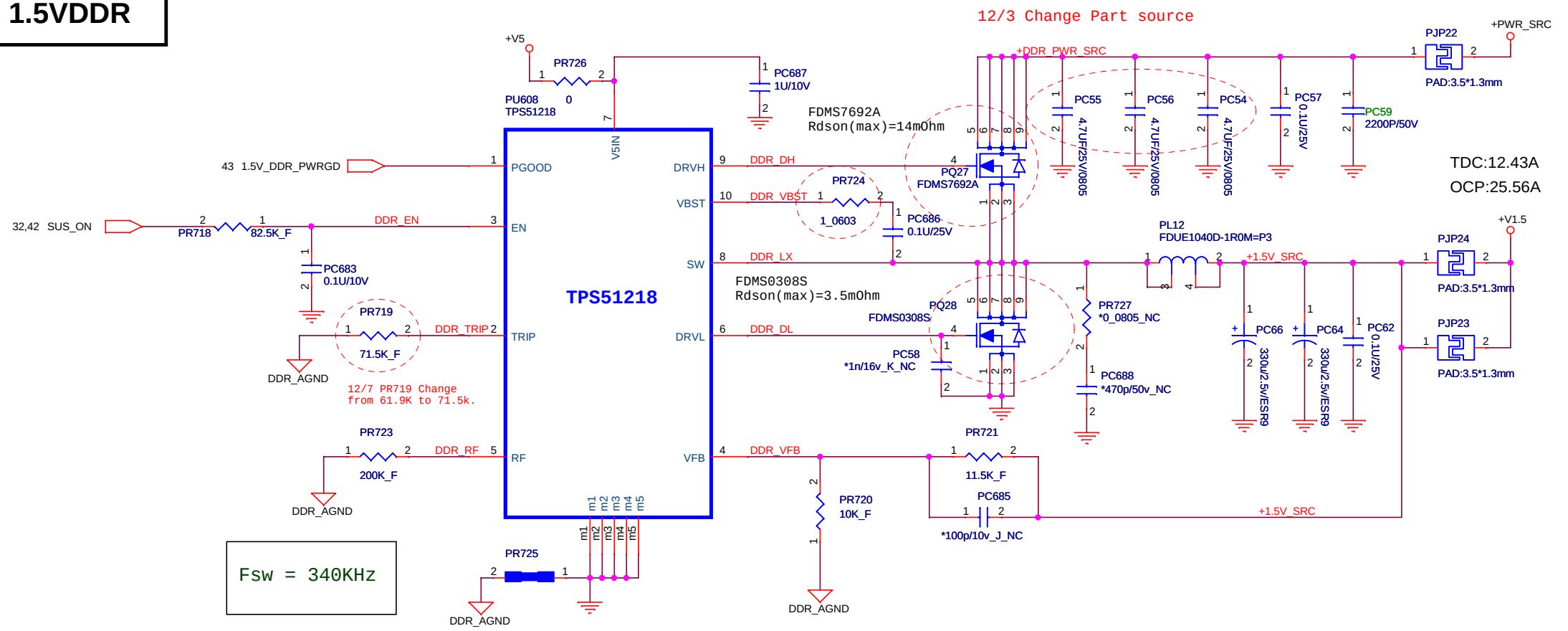

0.75VS

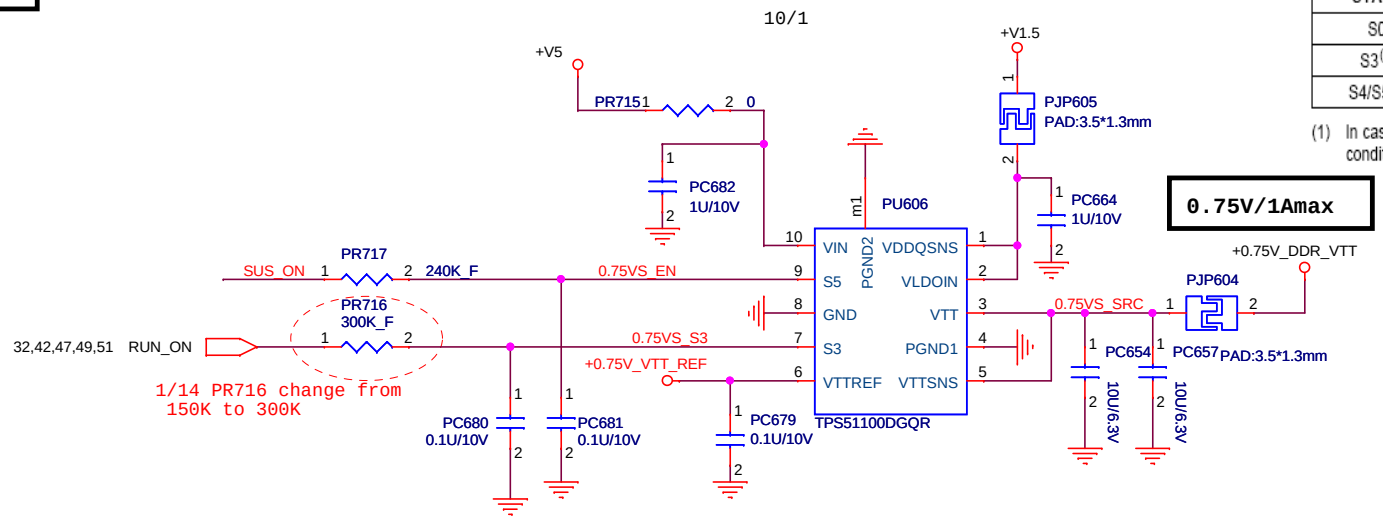

Table 1. S3 and S5 Control Tabl

STATE	S3	S5	VTTREF	VTT
S0	H	H	1	1
S3(1)	L	H	1	0 (high-Z)
S4/S5(1)	L	L	0 (discharge)	0 (discharge)

(1) In case S3 is forced to H and S5 to L, VTTREF is discharged and VTT is at High-Z state. This condition is NOT recommended.

Dell/ Flex Confidential

Title: **+V1.5 / +0.75VS**

Size | Document Number: **Inspiron Z -- INTEL** | Rev: X01

Date: Monday, January 18, 2010 | Sheet 48 of 57

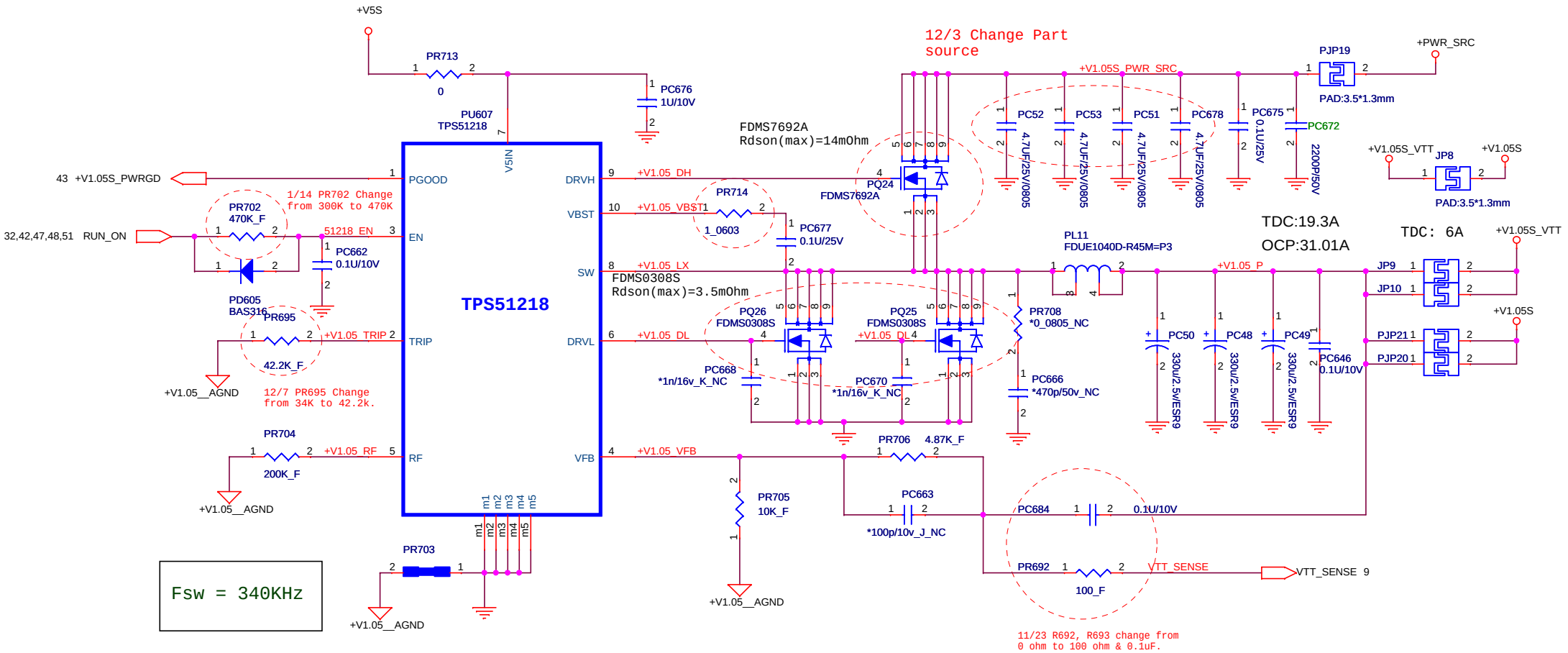

Dell/ Flex Confidential		
Title: +V1.05S_TPS51218		
Size	Document Number: Inspiron Z -- INTEL	Rev X01
Date: Monday, January 18, 2010	Sheet 49 of 57	

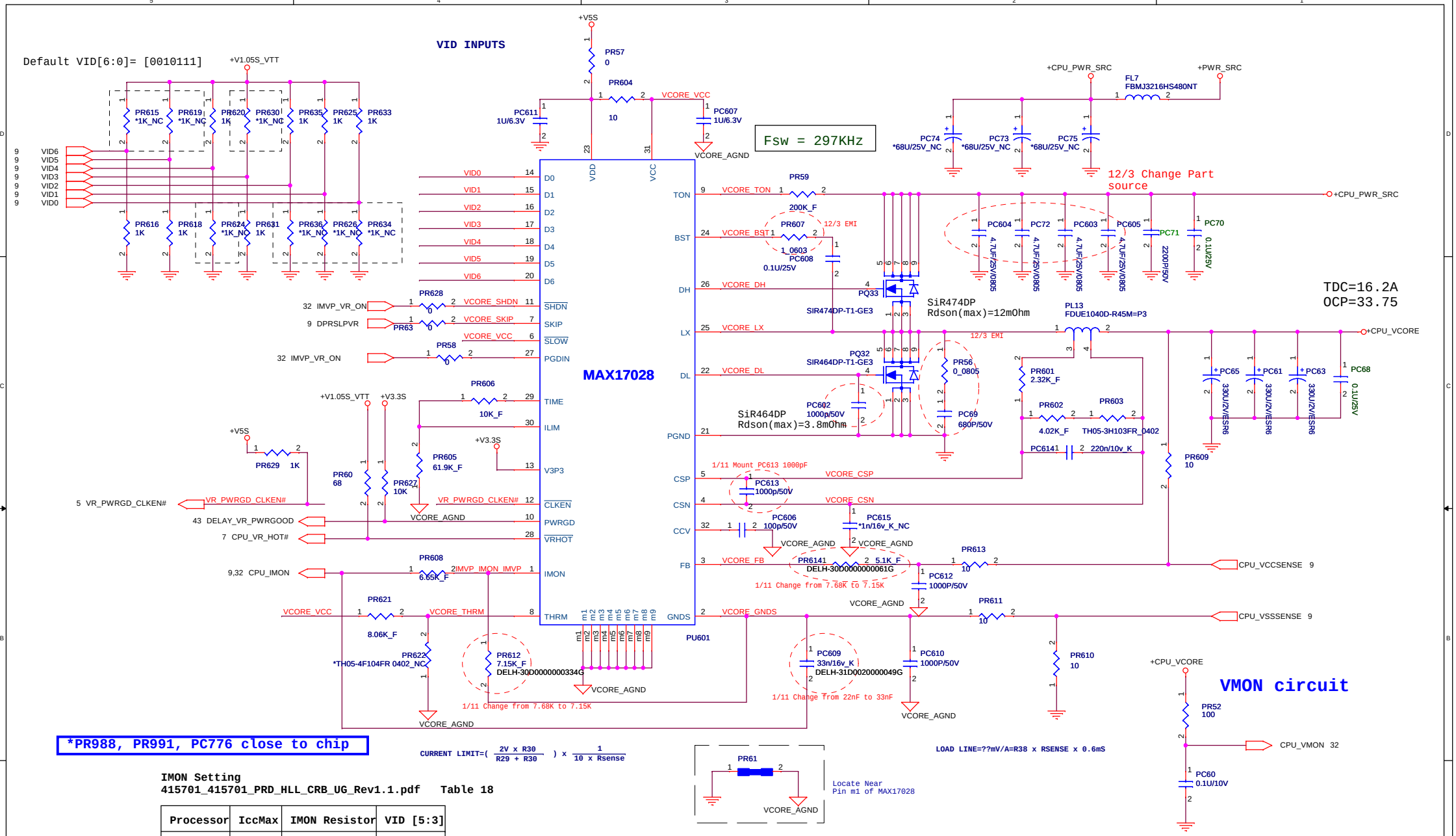

IMON Setting
415701_415701_PRD_HLL_CRB_UG_Rev1.1.pdf Table 18

Processor	IccMax	IMON Resistor	VID [5:3]
ULV	27A	20 K ohm	010

Dell/ Flex Confidential

Title: CPU CORE_MAX17028

Size | Document Number: Inspiron Z -- INTEL | Rev: X01

Date: Monday, January 18, 2010 | Sheet 50 of 57

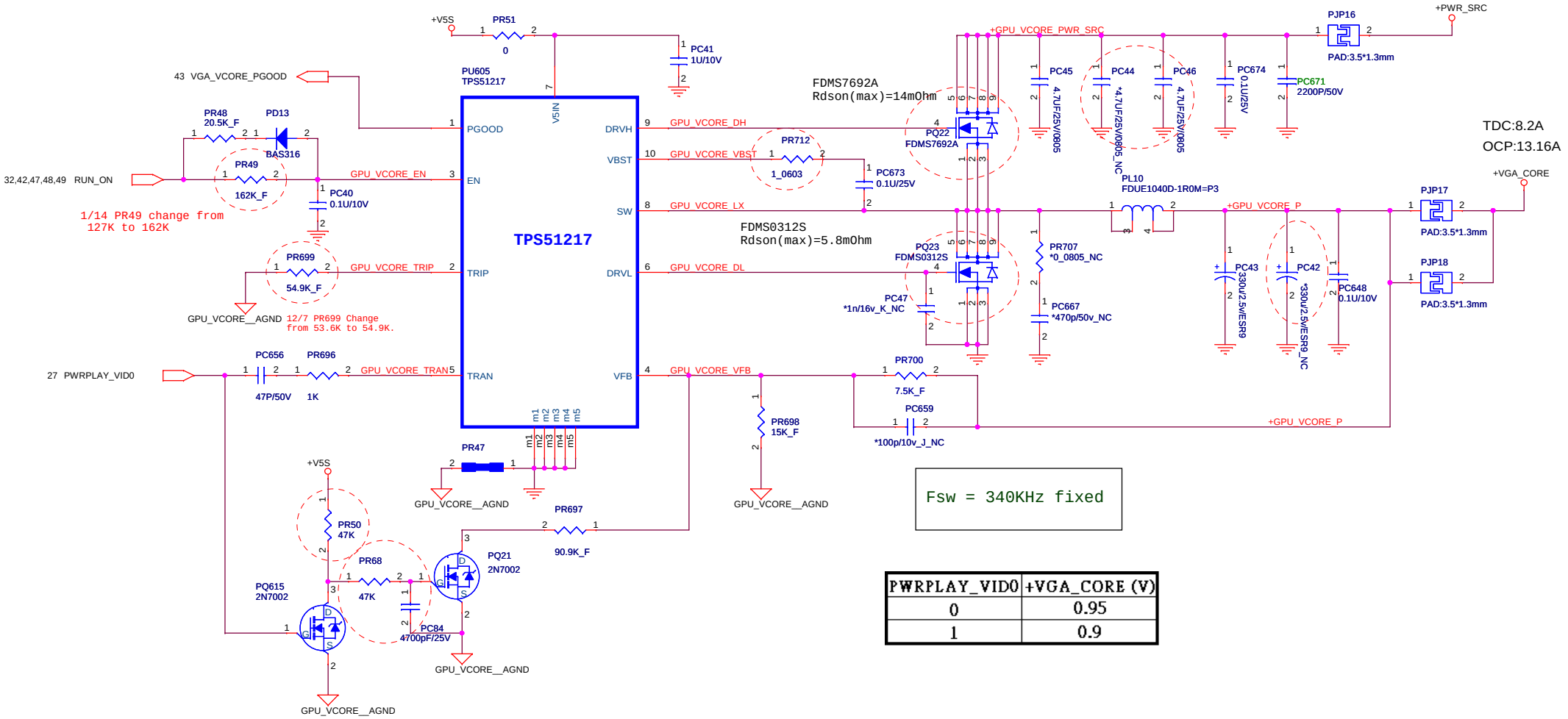

PWRPLAY_VID0	+VGA_CORE (V)
0	0.95
1	0.9

Discrete Only

TDC : 1.82A

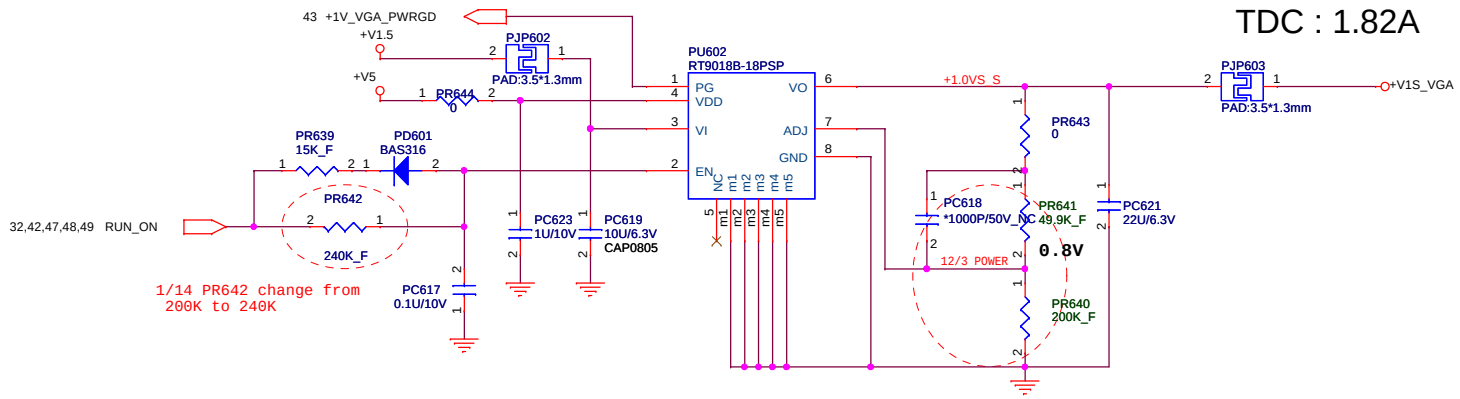

Dell/ Flex Confidential

Title: **+VGA_CORE/+V1S_VGA**

Size | Document Number: **Inspiron Z -- INTEL** | Rev: X01

Date: Monday, January 18, 2010 | Sheet 51 of 57

Screw Hole

H618 10/10/6 THR394_236
H613 10/10/6 THR394_236
H614 10/10/6 THR394_236
H606 0/6/4.7 THR236_185
H611 9/8/6 THR236_185
H609 0/6/4.7 THR236_185
H605 0/6/4.7 THR236_185
H612 0/6/4.7 THR236_185
H608 0/6/4.7 THR236_185
H615 0/6/4.7 THR236_185
H616 9/8/6 THR236_185
11/19 Change Footprint to THR236_185
H619 0/7/4.6 THR0B276_181
H623 0/7/4.6 THR0B276_181
H620 0/7/4.6 THR0B276_181
H602 7/8/2.8 THR276B315_110
H622 0/7/4.6 THR0B276_181
H603 0/6/4.7 THR354B315_236
H610 0/7/4.6 THR0B276_181
H624 8/7/2.8 THR315B276_110
H625 8/7/2.8 THR315B276_110
H617 0/7/4.6 THR0B276_181
H607 0/6/4.7 THR276B0_181
11/19 Change Footprint to THR0B276_181

H626 NPTH8/7/2.8 MTGR315B276_110
H629 NPTH7/8/2.8 MTGR276B315_110
H604 NPTH8/7/2.8 MTGR276B315_110
H628 NPTH8/7/2.8 MTGR276B315_110
H601 NPTH0/6/4.7 MTGR354B315_236
H621 NPTH8/7/2.8 MTGR315B276_110
H627 NPTH8/7/2.8 MTGR315B276_110

Moat Cap

+5V_ALW: C1096 C250 C1132 C1080 C970 C1073 C740 0.1U/10V
+5V_ALW / +V3.3S: C39 C718 0.1U/10V
+V3.3S: C701 C729 0.1U/10V
+V3.3S / +V1.05S: C868 C960 0.1U/10V
+V3.3S / +VGA_CORE: C818 0.1U/10V
+V3.3S / +V1.5S_VGA: C114 0.1U/10V
+V1.05S / +VGA_CORE: C129 0.1U/10V
+V1.05S / +V1.05S_VTT: C969 0.1U/10V
+V1.5S_VGA: C602 0.1U/10V
+V1.5S_VGA / +V1.05S_VTT: C635 0.1U/10V
+VGA_CORE / +V1.05S_VTT: C150 0.1U/10V
+VGA_CORE: C824 0.1U/10V
+V1.05S_VTT: C817 C938 C788 C198 0.1U/10V
+V1.05S_VTT / +CPU_VCORE: C720 0.1U/10V
+V1.5: C853 0.1U/10V

+CPU_VCORE: C251 0.1U/25V
+CPU_PWR_SRC: C634 C840 C913 0.1U/25V CAP0402
ADPWRB: C978 C253 0.1U/25V
+PWR_SRC / +5V_ALW: C1081 C1108 C1063 C975 C1078 0.1U/25V CAP0402
+PWR_SRC: C1064 C1102 C1049 C1052 C1057 C1025 0.1U/25V CAP0402 CAP0402
+PWR_SRC / +V1.5: C1065 0.1U/25V
+PWR_SRC / +V1.05S: C1054 C973 C108 0.1U/25V CAP0402 CAP0603 DELH-31D0010000007G
+PWR_SRC / +V3.3S: C1005 0.1U/25V
+CPU_PWR_SRC / +DCIN_JACK: C1006 C1007 0.1U/25V CAP0402 DELH-31D0010000007G
12/7 EMI Add.

FID

FID601 NC, NO CONNECT TO ANY.
FID8 NC, NO CONNECT TO ANY.
FID9 NC, NO CONNECT TO ANY.
FID7 NC, NO CONNECT TO ANY.
FID6 NC, NO CONNECT TO ANY.
FID603 NC, NO CONNECT TO ANY.
FID604 NC, NO CONNECT TO ANY.
FID602 NC, NO CONNECT TO ANY.

Dell/ Flex Confidential

Title	SCREW / PAD	
Size	Document Number: Inspiron Z -- INTEL	Rev X01
Date: Monday, January 18, 2010	Sheet 52 of 57	

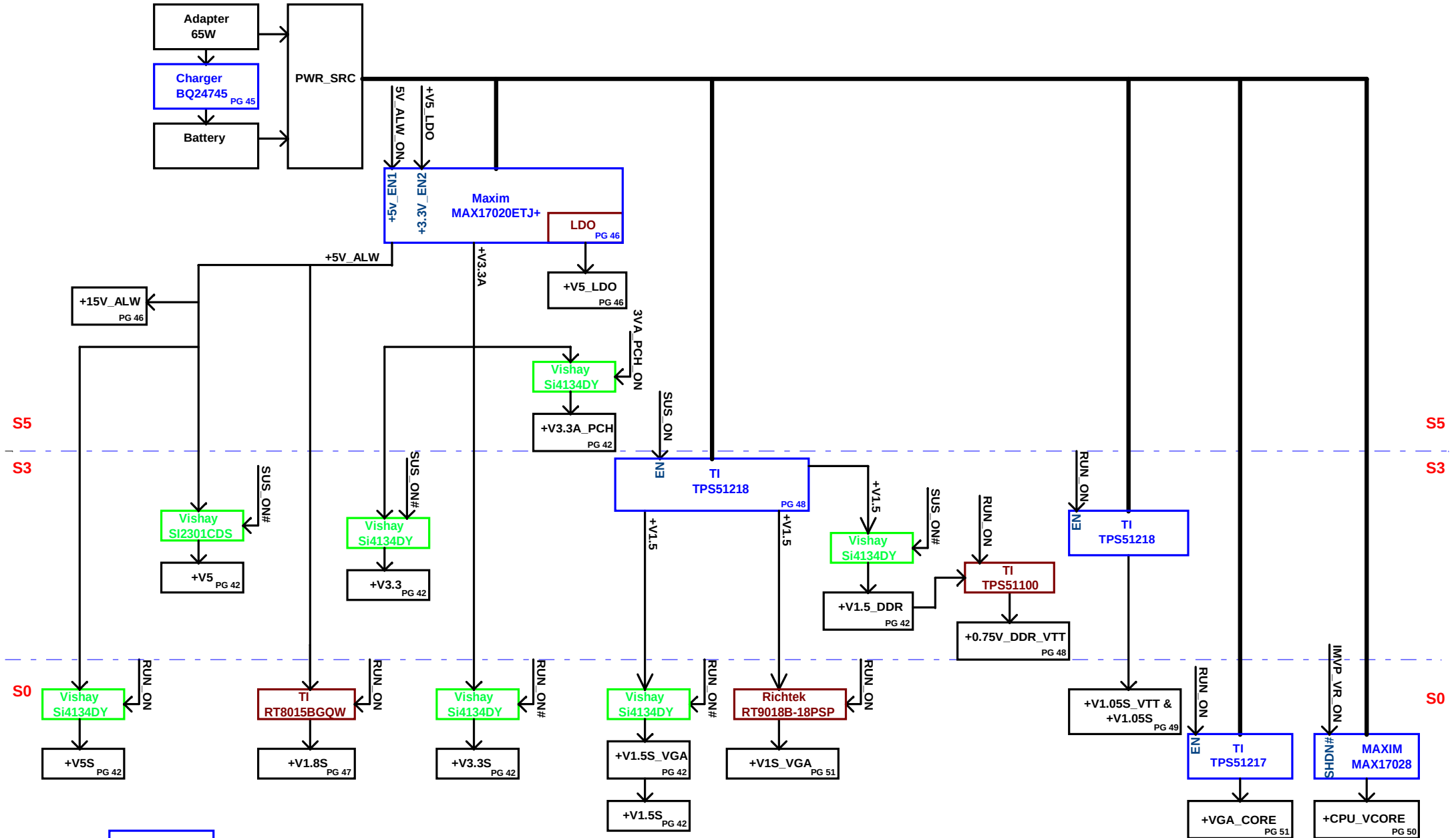

Power Rail	+5V_ALW	+V5_LDO	+15V_ALW	+V3.3A	+V1.8S	+V1.5	+0.75V_DDR_VTT	+V1.05S	+VGA_CORE	+CPU_VCORE	+V1S_VGA
TDC (Thermal Design Current)	4.66A	100mA	2mA	4.95A	1.47A	12.43A	0.7A	19.3A	11.2A	16.2A	1.82A
OCP (Over Current Protect)	8.33A	260mA		8.83A	2.63A	22.19A	6A	25.89A	20A	33.75	4.5A

Dell/ Flex Confidential

Title: **Power Block Diagram**

Size | Document Number: **Inspiron Z -- INTEL** | Rev: X01

Date: Monday, January 18, 2010 | Sheet 53 of 57

PCI RESET MAP

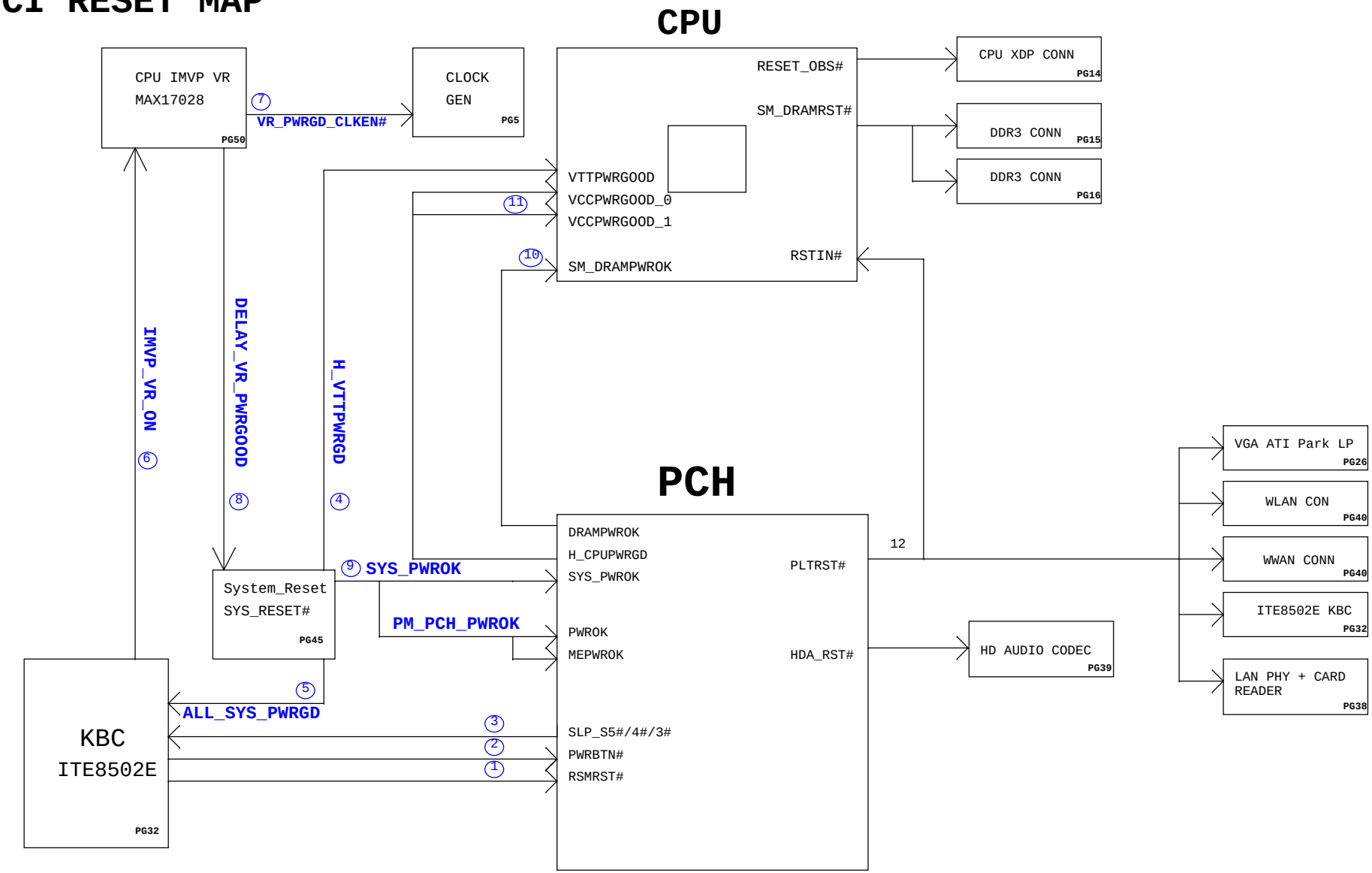

Dell/ Flex Confidential		
Title: PCI RESET MAP		
Size	Document Number: Inspiron Z -- INTEL	Rev: X01
Date: Monday, January 18, 2010	Sheet 54 of 57	

KBC Powre Up Sequence

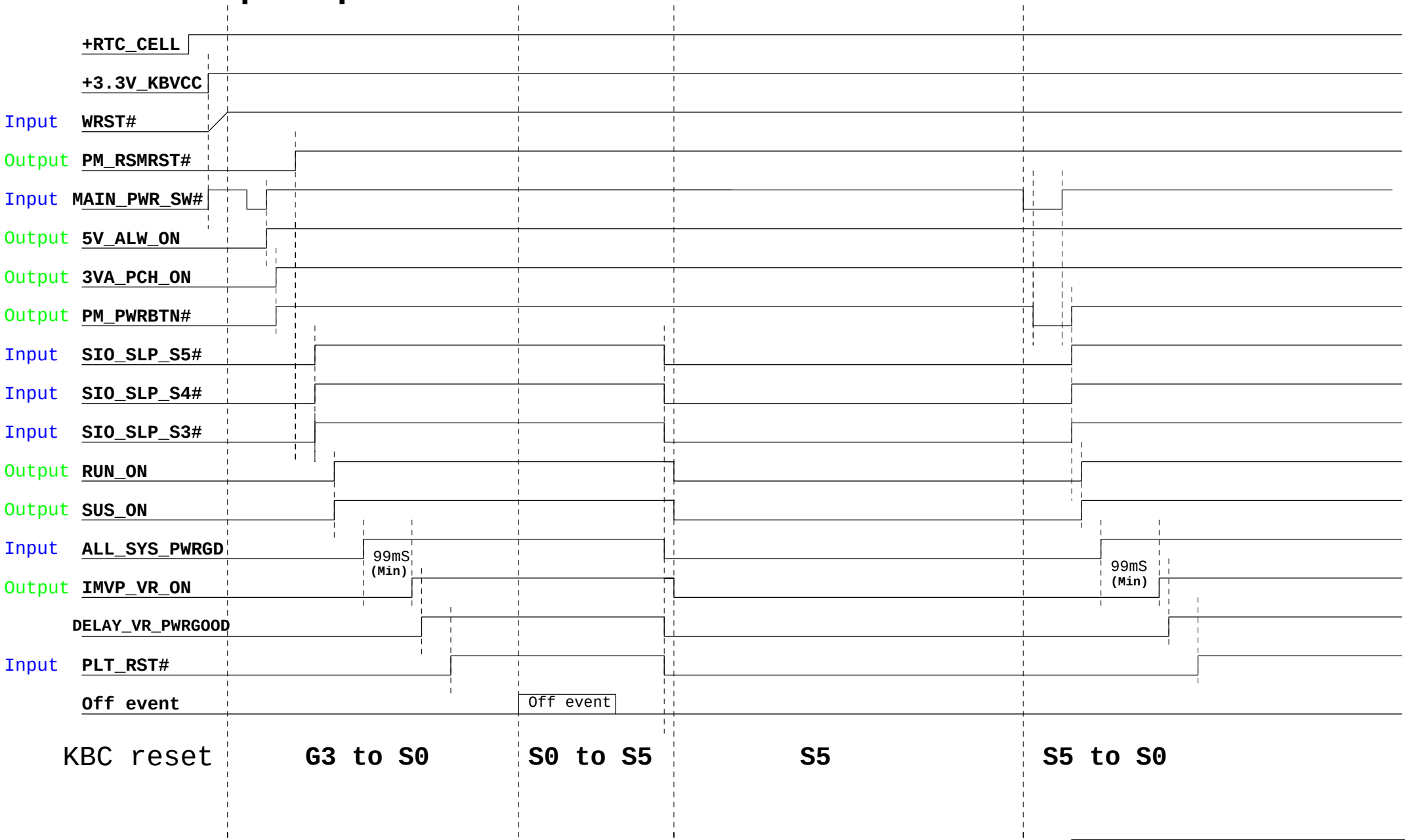

Dell/ Flex Confidential		
Title: KBC Power Up Sequence		
Size	Document Number: Inspiron Z -- INTEL	Rev X01
Date: Monday, January 18, 2010	Sheet 55 of 57	

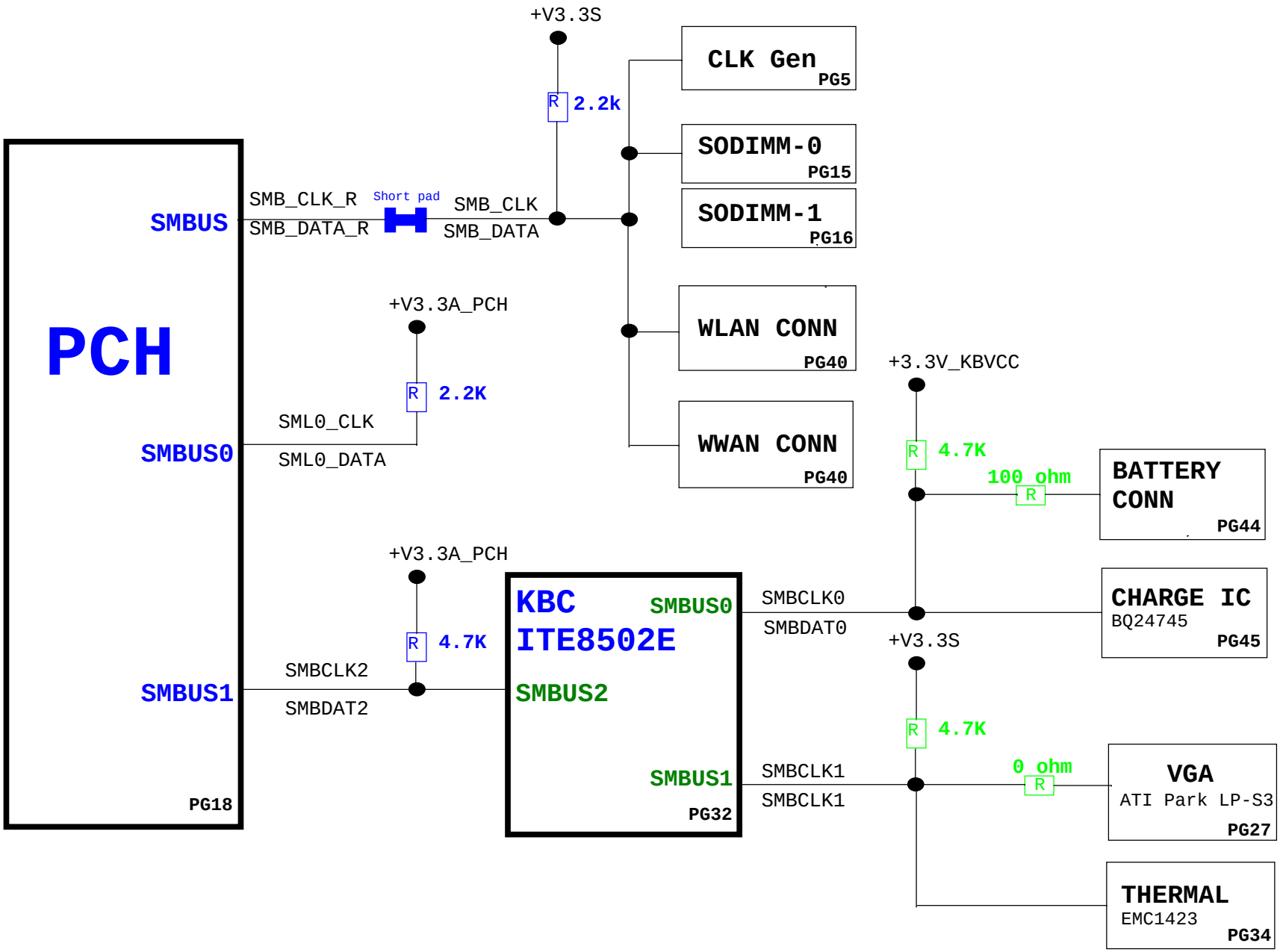

Dell/ Flex Confidential		
Title: SMBus Map		
Size	Document Number: Inspiron Z -- INTEL	Rev: X01
Date: Monday, January 18, 2010	Sheet 56 of 57	

EE change

Item	Fixed Issue	Reason for Change	Rev	PG#	Modify List
1	MMC Plus Can't Read	MMC Plus Can't Read	X01	38	C1055 change from 15pF to 5.6pF (DELH-31D0000000022G)
2	Update Conn MFR PN	Update Conn MFR PN	X01	36 37, 41	CN10 (HDMI) Change to DELH-38-00F0000013G, CN11 (mDP) Change to DELH-38D0110000005G CN612 (HDD) Change to DELH-38-00E0000071G, CN607 (KB) Change to DELH-38-00E0000072G
3	Update Chipset MFR PN	Update Chipset MFR PN	X01	7, 17	U17 CPU 1.2G (SLBMM) Change to DELH-11D0010000046G, U10 HM57 (SLGZR) Change to DELH-10D0010000012G
4	For HDMI SMBus Signal Quality	For HDMI SMBus Signal Quality	X01	36	C57, C67 Change from 33pF to 18pF DELH-31D0000000005G
5	Power Sequence	Power Sequence	X01	42	PR49 Change to 162K, PR55 Change to 330K, PR638 Change to 820K, PR642 Change to 240K, PR702 Change to 470K, PR716 Change to 300K.
6	Board ID Upgrade	Board ID Upgrade	X01	32	BID change from 01 to 10 for ST stage

POWER change

Item	Fixed Issue	Reason for Change	Rev	PG#	Modify List
1	Change Adapter OC control employment	Change Adapter OC control employment	X01	45	PR35, PR37, PR40, PR678 Change to NA. Add PR693 22K (DELH-30D0000000105G), Add PC694 0.1uF/10V(DELH-31D0020000012G), PR69 0ohm (NA) (DELH-30D0000000036G)
2	Improve 1.8V phase gain margin	Improve 1.8V phase gain margin	X01	47	PC658 change from 22pF to 33pF/50V(DELH-31D0000000009G)
3	PS_ID	DELL Suggestion	X01	44	PR685 Change from 100ohm to 33ohm.
4	VIMON RC Time Adjustment	From 196uS to 337uS	X01	50	PC609 change to 33nF/16V/X7R(DELH-31D0020000049G)
5	VIMON voltage precision	Vimon = 1V at load = 27A	X01	50	PR612 change to 7.15K_F_0402(DELH-30D0000000334G)
6	Improve load line precision	Improve load line precision	X01	50	PR614 change to 5.1K_F_0402(DELH-30D0000000061G)
7	Adjust the transeint response	Adjust the transeint response	X01	50	PC613 change to 1000pF/50V(DELH-31D0020000037G) and mounted
8	Update IC MFR PN	Update IC MFR PN	X01	47	Change PU6 MFR PN to RT8015DGQW (DELH-15D00B0000028G)

EMI change

Item	Fixed Issue	Reason for Change	Rev	PG#	Modify List