01_Block Diagram
02_System Setting
03_Power Sequence
04_EC Pin Define
05_History
06_*
07_Clock Gen_ICS9LPR427
08_Dothan_HOST
09_Dothan_PWR_GND
10_NB-910GML_HOST_DMI
11_NB-910GML_DRAM
12_NB-910GML_VGA_LVDS_TV
13_NB-910GML_PWR
14_NB-910GML_GND
15_SB-ICH6-M_Azalia_GPIO_PCI_LAN
16_SB-ICH6-M_USB_PCIE_DMI_IDE_SATA
17_SB-ICH6-M_PWR_GND
18_DDR2 SODIMM
19_DDR2_Termination
20_Onboard VGA
21_LCD Conn_LID
22_PCIEx 3.5G & Ext. Antenna
23_Mini WIFI+ BT
24_LAN_Atheros AR8113
25_MDC_RJ45
26_Flash Conn
27_SATA HDD
28_USB Port
29_Camera Power
30_Card Reader_AU6336C52
31_Codec_ALC269
32_Audio_AMP_Jack
33_EC_ENE KB3310
34_EC_UART controller
35_Switch_SPI ROM_Debug Conn
36_Thermal Sensor_FAN
37_KB_Touch Pad
38_LED
39_Discharge
40_PWR Jack
41_Srew Hole
42_EMI
43_POWER FLOW
44_Vcore
45_Power System
46_Power_+1.8V & VTTDDR
47_Power_VCCP
48_Power_+1.5VS & +2.5VS
49_Power_Charger

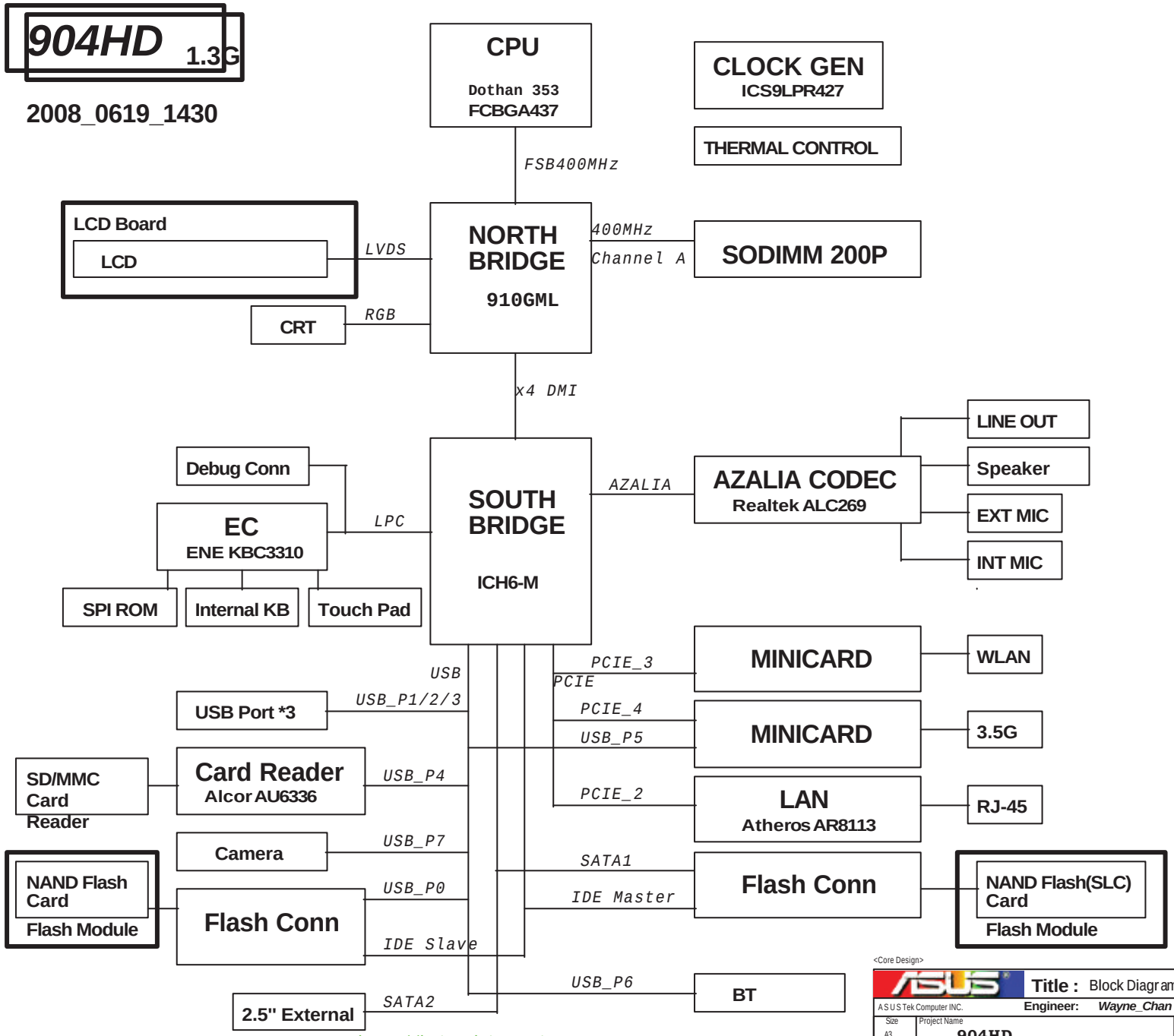

EEE PC 1000HD PCB version

GPI29	GPI31	PCB version
0	0	1.0G
0	1	
1	0	
1	1	

USB

USB 0	Flash Conn
USB 1	USB Conn
USB 2	USB Conn
USB 3	USB Conn
USB 4	Card Reader
USB 5	Minicard
USB 6	BT
USB 7	Camera

PCIE

PCIE1	NC
PCIE2	LAN
PCIE3	Minicard
PCIE4	Minicard

Azalia

ACZ_SDIN0	CODEC
ACZ_SDIN1	NC
ACZ_SDIN2	NC

http://hobi-elektronika.net

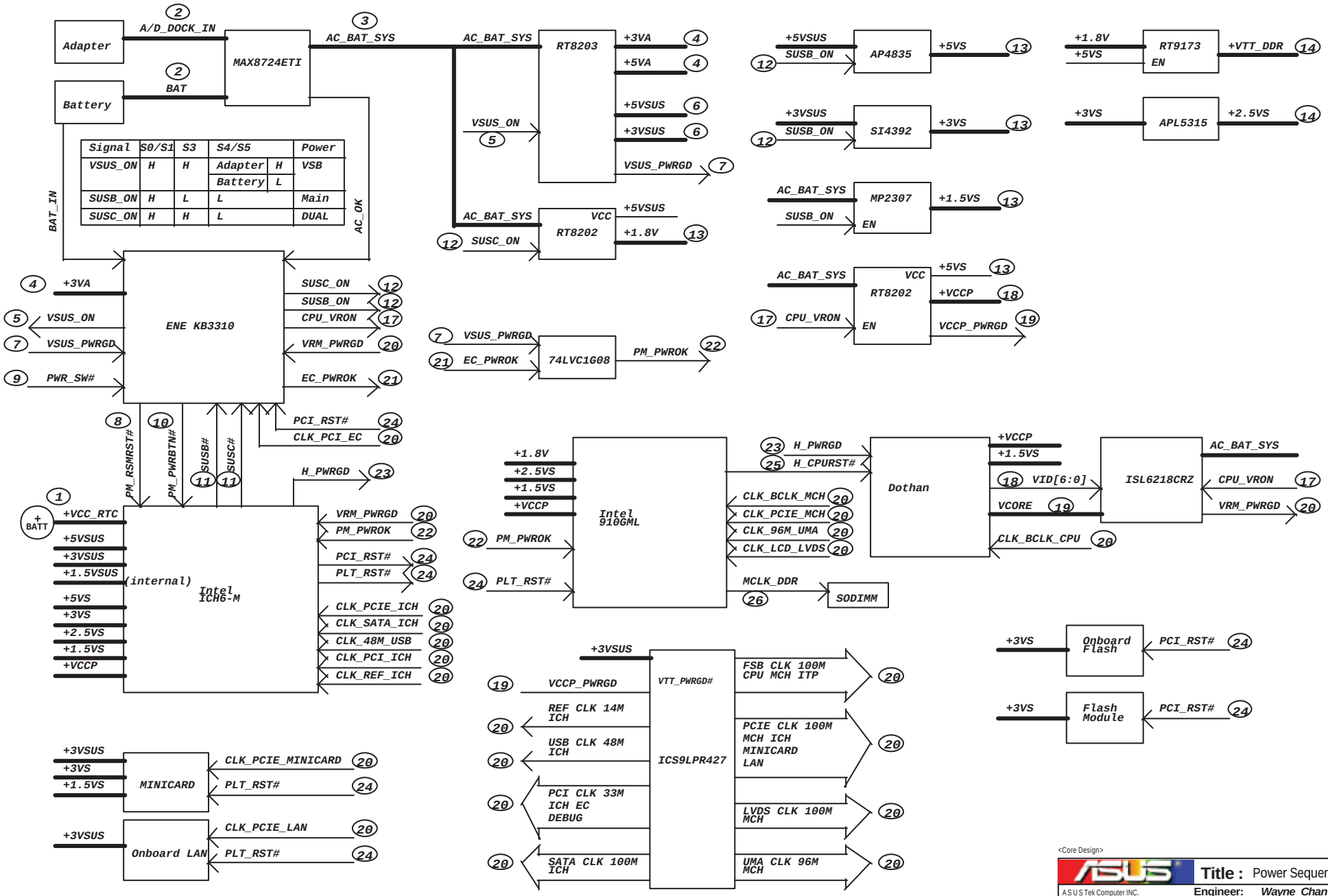

Signal	S0/S1	S3	S4/S5		Power
VSUS_ON	H	H	Adapter	H	VSB
			Battery	L	
SUSB_ON	H	L	L		Main
SUSC_ON	H	H	L		DUAL

http://hobi-elektronika.net

<Core Design>

ASUS

Title : Power Sequence

A S U S Tek Computer INC. Engineer: Wayne_Chan

Size	Project Name	Rev
A3	904HD	1.3G

Date: Tuesday, July 01, 2008 Sheet 3 of 49

EC KB3310 GPIO SETTING

Pin	Pin Name	Signal Name	Type	Note
1	GPIO00/GA20	A20GATE	O	
2	GPIO01/KBRST#	RC_IN#	O	
6	GPIO04	HOTKEY_SW0#	I	Internal pullhigh
13	GPIO05/PCIRST#	PCI_RST#	I	
14	GPIO07	HOTKEY_SW1#	I	Internal pullhigh
15	GPIO08	EXTSMI#	OD	10K pull high to +3VSB
16	GPIO0A	LID_EC#	I	0-LidOff, 1-LidOn. Internal Pull Up
17	GPIO0B/ESB_CLK	NC	O	
18	GPIO0C/ESB_DAT	NC	O	
19	GPIO0D	HOTKEY_SW2#	I	Internal pullhigh
20	GPIO0E/SCI#	EXT_SCI#	O	10K pull high to +3VSB
21	GPIO0F/PWM0	BL_PWM_DA	O	
23	GPIO10/PWM1	BATSEL_4P#	I	battery charging current setting
25	GPIO11/PWM2	PM_PWRBTN#	OD	Internal pull high in ICH
26	GPIO12/FANPWM1	FAN0_PWM	O	CPU Fan
27	GPIO13/FANPWM2	FAN1_PWM	O	VGA Fan
28	GPIO14/FANFB1	FAN0_TACH	I	CPU FanTach
29	GPIO15/FANFB2	FAN1_TACH	I	VGA FanTach
30	GPIO16/E51_TX	E51_TX	O	RS232 debugport
31	GPIO17/E51_RX	E51_RX	I	RS232 debugport
32	GPIO18	PWR_SW#	I	power button, internel pull-Up
34	GPIO19/PWM3	MAIL_LED#	O	
36	GPIO1A/NUMLED	NUM_LED#	O	
38	GPIO1D/CLKRUN#	CHG_LED_GREEN#	O	Green LED for charging
39	GPIO20/KSO0/TP_TEST	KSO0	O	
40	GPIO21/KSO1/TP_PLL	KSO1	O	
41	GPIO22/KSO2	KSO2	O	
42	GPIO23/KSO3	KSO3	O	
43	GPIO24/KSO4	KSO4	O	
44	GPIO25/KSO5	KSO5	O	
45	GPIO26/KSO6	KSO6	O	
46	GPIO27/KSO7	KSO7	O	
47	GPIO28/KSO8	KSO8	O	
48	GPIO29/KSO9	KSO9	O	
49	GPIO2A/KSO10	KSO10	O	
50	GPIO2B/KSO11	KSO11	O	
51	GPIO2C/KSO12	KSO12	O	
52	GPIO2D/KSO13	KSO13	O	
53	GPIO2E/KSO14	KSO14	O	
54	GPIO2F/KSO15	KSO15	O	
55	GPIO30/KSI0	KSI0	I	Internal pullhigh
56	GPIO31/KSI1	KSI1	I	Internal pullhigh
57	GPIO32/KSI2	KSI2	I	Internal pullhigh
58	GPIO33/KSI3	KSI3	I	Internal pullhigh
59	GPIO34/KSI4	KSI4	I	Internal pullhigh
60	GPIO35/KSI5	KSI5	I	Internal pullhigh
61	GPIO36/KSI6	KSI6	I	Internal pullhigh
62	GPIO37/KSI7	KSI7	I	Internal pullhigh
63	GPI38/AD0	BAT_ICHG	I	
64	GPI39/AD1	BAT_CONFIG	I	Battery configureation
65	GPIO3A/AD2	BAT_SENSE	I	Battery Voltage Sensor
66	GPIO3B/AD3	BAT_TS	I	Battery Thermal Sensor
68	GPO3C/DA0	DOC	O	Trigger ClockGen

Pin	Pin Name	Signal Name	Type	Note
70	GPO3D/DA1	LCD_BACKOFF#	O	
71	GPO3E/DA2	CLK_PWRSAVE#	O	
72	GPO3F/DA3	BAT_LL#	O	Battery LowLow
73	GPIO40	AC_OK	I	AC Adaptor Plugin
74	GPIO41	EC_RSMRST#	O	10K pull down to GND
75	GPI42	BAT_IN	I	
76	GPI43	CLRTC_EC	I	
77	GPIO44/SCL1	SMB0_CLK	I/OD	4.7K pull high to +3VA_EC
78	GPIO45/SDA1	SMB0_DAT	I/OD	4.7K pull high to +3VA_EC
79	GPIO46/SCL2	SMB1_CLK	I/OD	10K pull high to +3V
80	GPIO47/SDA2	SMB1_DAT	I/OD	10K pull high to +3V
81	GPIO48/KSO16	NC	I	for KB type detection
82	GPIO49/KSO17	NC	I	for KB type detection
83	GPIO4A/PSCLK1	NC	O	LCD_SCL
84	GPIO4B/PSDAT1	NC	O	LCD_SDA
85	GPIO4C/PSCLK2	NC	O	LCD_CSB
86	GPIO4D/PSDAT2	NC	O	LCD_VSYNC
87	GPIO4E/PSCLK3	TP_CLK	I/OD	10K pull high to +3V
88	GPIO4F/PSDAT3	TP_DAT	I/OD	10K pull high to +3V
89	GPIO50/SELIO#	BATSEL_3S	O	Battery series, H:3S, L:4S
90	GPIO52/E51_CS#	CHG_LED_UP#	O	
91	GPIO53/CAPLED	CAP_LED#	O	
92	GPIO54	PWR_LED_UP	O	
93	GPIO55/SCRLED	SCRL_LED#	O	
95	GPIO56	HOTKEY_SW3#	I	Internal pullhigh
97	GPXOA00/SDICS#	SPI_MODE#	O	4.7K pull down to GND
98	GPXOA01/SDICLK	SUSC_ON	O	
99	GPXOA02/SDIDO	VSUS_ON	O	
100	GPXOA03	CPU_VRON	O	
101	GPXOA04	SUSB_ON	O	
102	GPXOA05	EC_PWROK	O	
103	GPXOA06	PM_LEVELDOWN#	O	
104	GPXOA07	CHG_EN#	O	Battery charging enabled
105	GPXOA08	PRECHG	O	
106	GPXOA09	SPI_WP#	O	
107	GPX0A10	OP_SD#	O	Audio OP
108	GPXOA11	BAT_LEARN	O	
109	GPXID0/SDIDI	BATSEL_2P#	O	Battery parallel, H:1P, L:2P-3P
110	GPXID1	CPU_LEVELDOWN#	O	
112	GPXID2	THRO_CPU	O	Active if CPU temperature over spec
114	GPXID3	PM_SUSB#	I	100K pull down to GND
115	GPXID4	PM_SUSC#	I	100K pull down to GND
116	GPXID5	VRM_PWRGD	I	Pull high to +3V
117	GPXID6	VSUS_PWRGD	I	
118	GPXID7	BATSEL_LiFe	O	
121	GPIO57	INTERNET#	I	Internal pullhigh
126	GPIO57/SPICLK	SPI_CLK	O	
127	GPIO59/TEST_CLK	NC	O	Internal pullhigh

EC KB3310 Other Pin SETTING

Pin	Pin Name	Signal Name	Type	Note
3	SERIRQ	INT_SERIRQ	I/OD	10K pull high to +3V
4	LFRAME#	LPC_FRAME#	I	
5	LAD3	LPC_AD3	I/O	
7	LAD2	LPC_AD2	I/O	
8	LAD1	LPC_AD1	I/O	
9	VCC	+3VA_EC	P	
10	LAD0	LPC_AD0	I/O	
11	GND	GND	P	
12	PCICLK	CLK_PCI_EC	I	
22	VCC	+3VA_EC	P	
24	GND	GND	P	
33	VCC	+3VA_EC	P	
35	GND	GND	P	
37	ECRST#	EC_RST#	I	100K pull high to +3VA_EC
67	AVCC	+3VACC	P	
69	AGND	AGND	P	
94	GND	GND	P	
96	VCC	+3VA_EC	P	
111	VCC	+3VA_EC	P	
113	GND	GND	P	
119	RD#/SPIDI	SPI_SO	I	
120	WR#/SPIDO	SPI_SI	O	
112	XCLKI	32KXCLKI	I	
123	XCLKO	32KXCLKO	O	
124	V18R	V18R	P	Reserved 1uF to GND
125	VCC	+3VA_EC	P	
128	SPICS#/SELMEM#	SPI_CE#	O	

http://hobi-elektronika.net

<Core Design>

ASUS	Title : EC Pin Define	
ASUS Tek Computer INC.	Engineer: Wayne_Chan	
Size A3	Project Name 904HD	Rev 1.3G
Date: Tuesday, July 01, 2008	Sheet 4 of 49	

1.0G From 1000H 2008.3.31.2030 circuit

1.Change CPU to Dothan

2.Change NB to 910GML

3.Change SB to ICH6-M

4.VCORE control change to ISL6218CRZ

1.1G

1.Change Project name to 1000D

2.Support LiFe Battery

3.Add speaker connect

1.2G

1.Change Project name to 1000HD
2.Modify page 45.
3.Add and reserved CE1 CE5 CE6 for USB port
4.Modify schematic of LED
5.Remove Capacitor of Microphone from clock and data signal
6.Add page33 Hotkey de-bounced related schematic
7.Add page23 PERST#pull down 1M ohm

1.3G

1.Change net BAT_TS pull up to +3VA_AEC
2.Change SD1.2 pull up to +3VA_AEC
3.Add and reserved R287,R288,R289,R290 for USB power
4.Add PR670,PR671
5.Add PR483,PR42, PR230, PR231,remove PJP400

http://hobi-elektronika.net

http://hobi-elektronika.net

<Core Design>

ASUS	Title : Blank	
A S U S Tek Computer INC.	Engineer: *Wayne_Chan*	
Size: A3	Project Name: **904HD**	Rev: 1.3G
Date: Tuesday, July 01, 2008	Sheet 6 of 49	

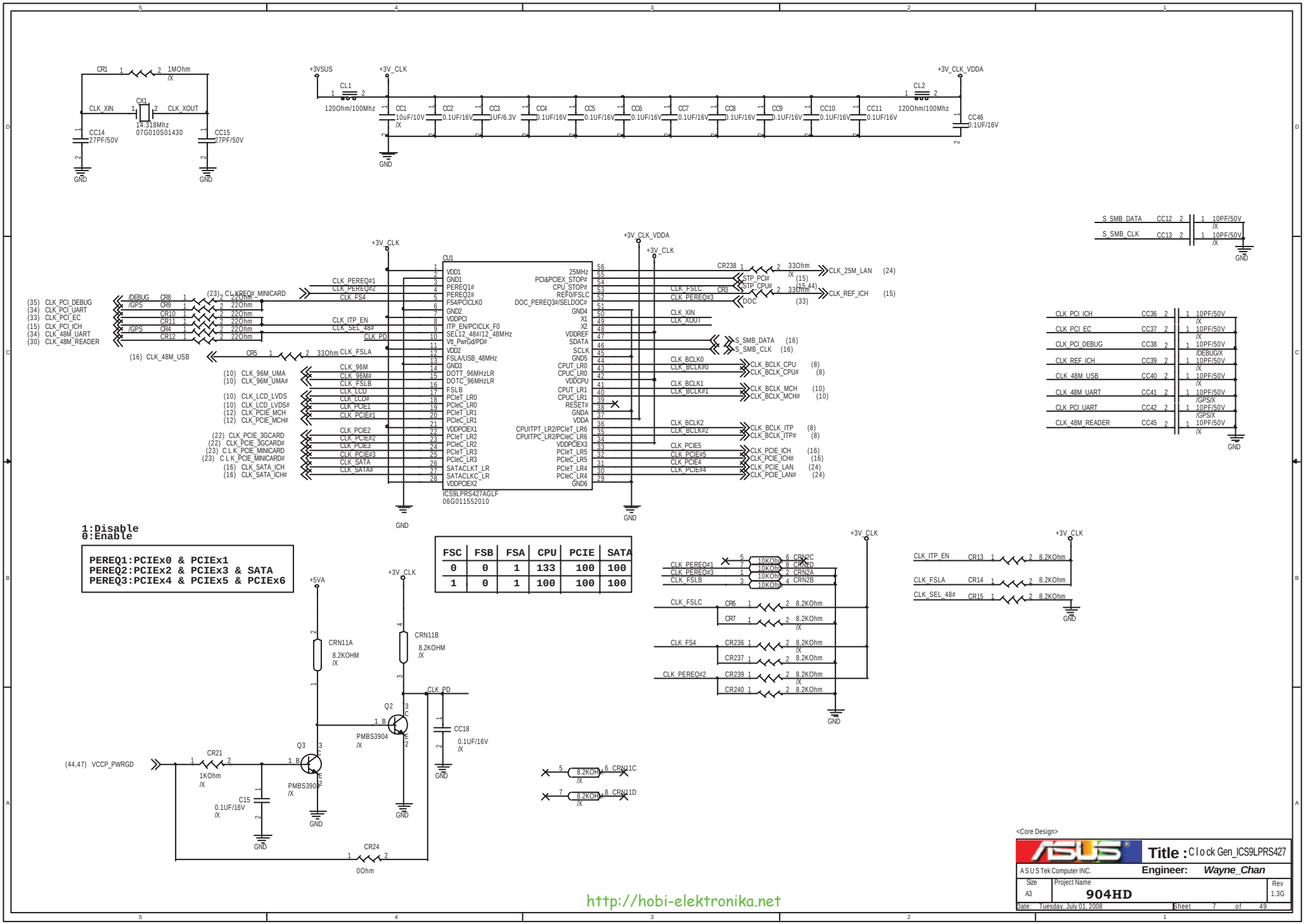
CR1 1MOhm /X
CX1 14.318Mhz 07G010S01430
CLK_XIN
CLK_XOUT
CC14 27PF/50V
CC15 27PF/50V
GND
+3VSUS
+3V_CLK
CL1 120Ohm/100Mhz
CC1 10uF/10V /X
CC2 0.1UF/16V
CC3 1UF/6.3V
CC4 0.1UF/16V
CC5 0.1UF/16V
CC6 0.1UF/16V
CC7 0.1UF/16V
CC8 0.1UF/16V
CC9 0.1UF/16V
CC10 0.1UF/16V
CC11 0.1UF/16V
+3V_CLK_VDDA
CL2 120Ohm/100Mhz
CC46 0.1UF/16V
S_SMB_DATA CC12 10PF/50V /X
S_SMB_CLK CC13 10PF/50V /X
CU1
ICS9LPRS427AGLF
06G011552010
VDD1
GND1
PEREQ1#
PEREQ2#
FS4/PCICLK0
GND2
VDDPCI
ITP_EN/PCICLK_F0
SEL12_48#/12_48MHz
Vtt_PwrGd/PD#
VDD2
FSLA/USB_48MHz
GND3
DOTT_96MHzLR
DOTC_96MHzLR
FSLB
PCIeT_LR0
PCIeC_LR0
PCIeT_LR1
PCIeC_LR1
VDDPCIEX1
PCIeT_LR2
PCIeC_LR2
PCIeT_LR3
PCIeC_LR3
SATACLKT_LR
SATACLKC_LR
VDDPCIEX2
25MHz
PCI&PCIEX_STOP#
CPU_STOP#
REF0/FSLC
DOC_PEREQ3#/SELDOC#
GND4
X1
X2
VDDREF
SDATA
SCLK
GND5
CPUT_LR0
CPUC_LR0
VDDCPU
CPUT_LR1
CPUC_LR1
RESET#
GNDA
VDDA
CPUITPT_LR2/PCIeT_LR6
CPUITPC_LR2/PCIeC_LR6
VDDPCIEX3
PCIeT_LR5
PCIeC_LR5
PCIeT_LR4
PCIeC_LR4
GND6
CR8 22Ohm
CR9 22Ohm
CR10 22Ohm
CR11 22Ohm
CR4 22Ohm
CR12 22Ohm
CR5 33Ohm
CR238 33Ohm /X
CR3 33Ohm
CLK_PEREQ#_MINICARD
CLK_PEREQ#1
CLK_PEREQ#2
CLK_FS4
CLK_ITP_EN
CLK_SEL_48#
CLK_PD
CLK_FSLA
CLK_96M
CLK_96M#
CLK_FSLB
CLK_LCD
CLK_LCD#
CLK_PCIE1
CLK_PCIE#1
CLK_PCIE2
CLK_PCIE#2
CLK_PCIE3
CLK_PCIE#3
CLK_SATA
CLK_SATA#
CLK_25M_LAN
CLK_REF_ICH
CLK_FSLC
CLK_PEREQ#3
CLK_XIN
CLK_XOUT
S_SMB_DATA
S_SMB_CLK
CLK_BCLK0
CLK_BCLK#0
CLK_BCLK_CPU
CLK_BCLK_CPU#
CLK_BCLK1
CLK_BCLK#1
CLK_BCLK_MCH
CLK_BCLK_MCH#
CLK_BCLK2
CLK_BCLK#2
CLK_BCLK_ITP
CLK_BCLK_ITP#
CLK_PCIE5
CLK_PCIE#5
CLK_PCIE4
CLK_PCIE#4
CLK_PCIE_ICH
CLK_PCIE_ICH#
CLK_PCIE_LAN
CLK_PCIE_LAN#
CLK_PCI_ICH CC36 10PF/50V /X
CLK_PCI_EC CC37 10PF/50V /X
CLK_PCI_DEBUG CC38 10PF/50V /DEBUG/X
CLK_REF_ICH CC39 10PF/50V /X
CLK_48M_USB CC40 10PF/50V /X
CLK_48M_UART CC41 10PF/50V /GPS/X
CLK_PCI_UART CC42 10PF/50V /GPS/X
CLK_48M_READER CC45 10PF/50V /X
(35) CLK_PCI_DEBUG
(34) CLK_PCI_UART
(33) CLK_PCI_EC
(15) CLK_PCI_ICH
(34) CLK_48M_UART
(30) CLK_48M_READER
(16) CLK_48M_USB
(10) CLK_96M_UMA
(10) CLK_96M_UMA#
(10) CLK_LCD_LVDS
(10) CLK_LCD_LVDS#
(12) CLK_PCIE_MCH
(12) CLK_PCIE_MCH#
(22) CLK_PCIE_3GCARD
(22) CLK_PCIE_3GCARD#
(23) CLK_PCIE_MINICARD
(23) CLK_PCIE_MINICARD#
(16) CLK_SATA_ICH
(16) CLK_SATA_ICH#
(15) STP_PCI#
(15,44) STP_CPU#
(33) DOC
(16) S_SMB_DATA
(16) S_SMB_CLK
(8) CLK_BCLK_CPU
(8) CLK_BCLK_CPU#
(10) CLK_BCLK_MCH
(10) CLK_BCLK_MCH#
(8) CLK_BCLK_ITP
(8) CLK_BCLK_ITP#
(16) CLK_PCIE_ICH
(16) CLK_PCIE_ICH#
(24) CLK_PCIE_LAN
(24) CLK_PCIE_LAN#
1:Disable
0:Enable
PEREQ1:PCIEx0 & PCIEx1
PEREQ2:PCIEx2 & PCIEx3 & SATA
PEREQ3:PCIEx4 & PCIEx5 & PCIEx6
FSC | FSB | FSA | CPU | PCIE | SATA
0 | 0 | 1 | 133 | 100 | 100
1 | 0 | 1 | 100 | 100 | 100
+5VA
CRN11A 8.2KOHM /X
CRN11B 8.2KOHM /X
CLK_PD
Q2 PMBS3904 /X
CC18 0.1UF/16V /X
Q3 PMBS3904 /X
(44,47) VCCP_PWRGD
CR21 1KOhm /X
C15 0.1UF/16V /X
CR24 0Ohm
CRN2C 10KOhm
CRN2D 10KOhm
CRN2A 10KOhm
CRN2B 10KOhm
CLK_PEREQ#1
CLK_PEREQ#3
CLK_FSLB
CLK_FSLC CR6 8.2KOhm
CR7 8.2KOhm /X
CLK_FS4 CR236 8.2KOhm /X
CR237 8.2KOhm
CLK_PEREQ#2 CR239 8.2KOhm /X
CR240 8.2KOhm
CLK_ITP_EN CR13 8.2KOhm
CLK_FSLA CR14 8.2KOhm
CLK_SEL_48# CR15 8.2KOhm
8.2KOHM /X CRN11C
8.2KOHM /X CRN11D
<Core Design>
Title : Clock Gen_ICS9LPRS427
ASUS Tek Computer INC.
Engineer: Wayne_Chan
Size A3
Project Name 904HD
Rev 1.3G
Date: Tuesday, July 01, 2008
Sheet 7 of 49
http://hobi-elektronika.net

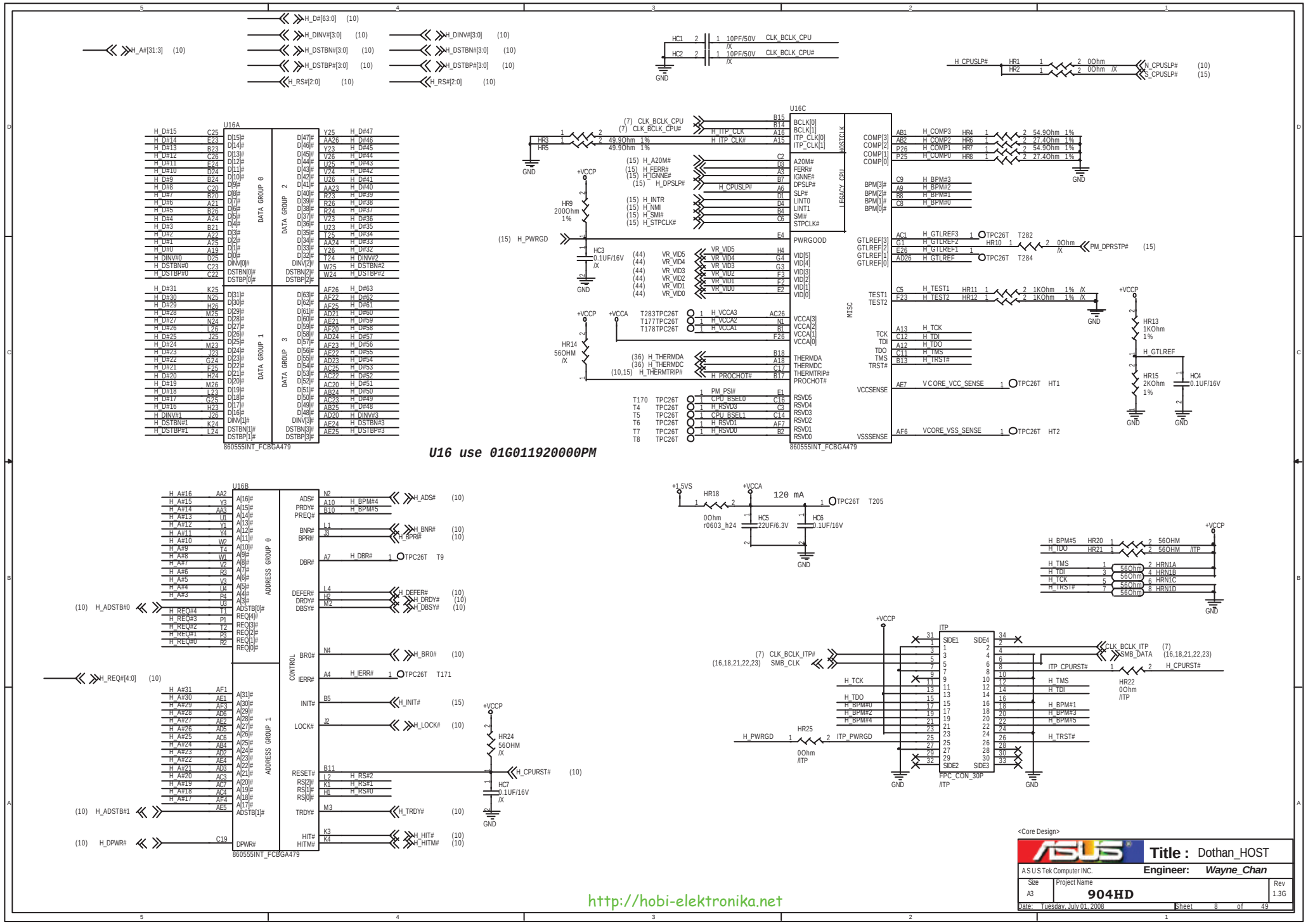

http://hobi-elektronika.net

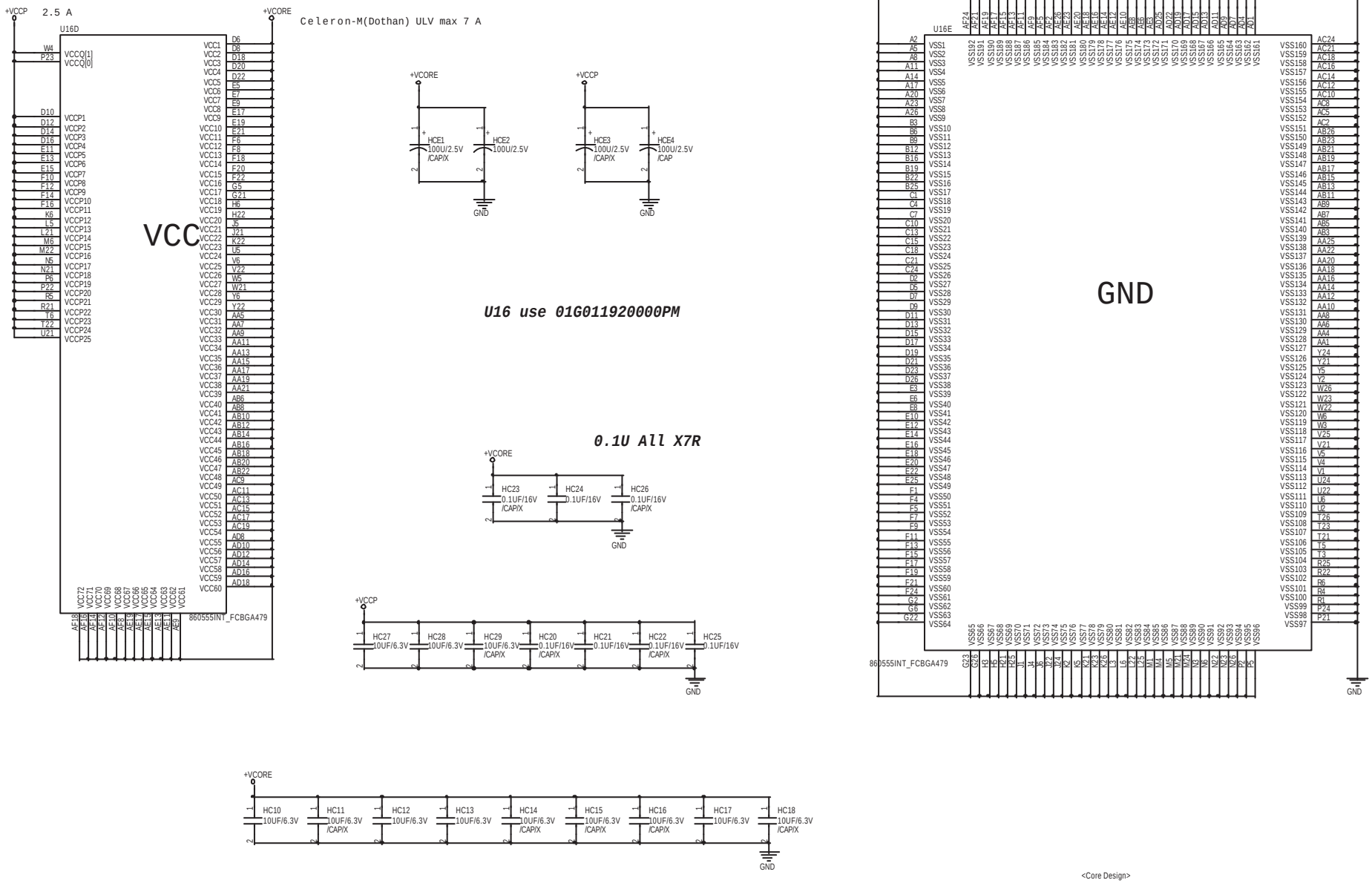

http://hobi-elektronika.net

<Core Design>

ASUS	Title :	Dothan_PWR_GND
A S U S Tek Computer INC.	Engineer:	Wayne_Chan
Size: A3	Project Name: 904HD	Rev: 1.3G
Date: Tuesday, July 01, 2008	Sheet 9 of 49	

BCLK	FSB	BSEL2	BSEL1	BSEL0
100	400	H	L	H

U1 use 02G010007612

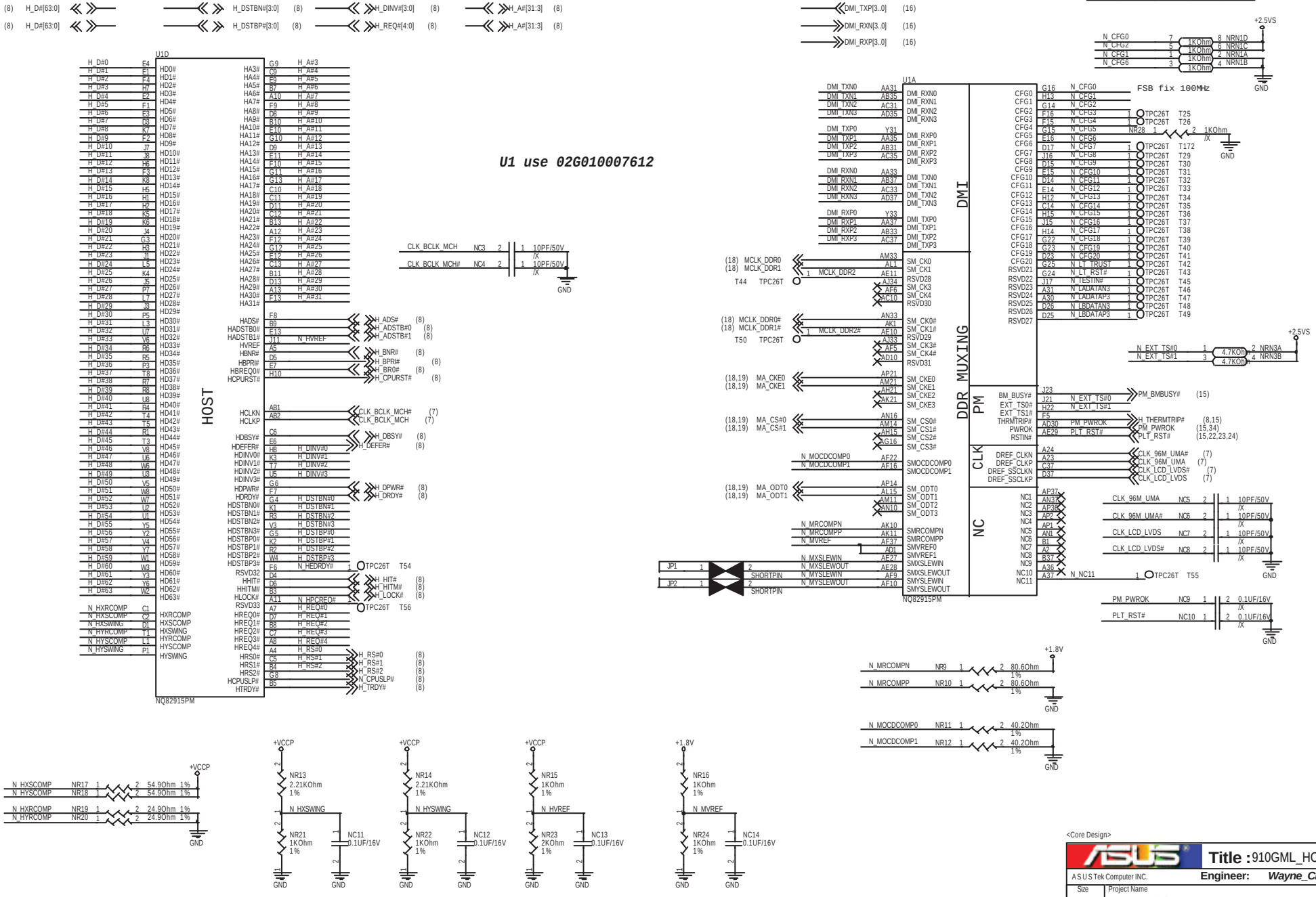

http://hobi-elektronika.net

<Core Design>

ASUS Title : 910GML_HOST_DMI

A S U S Tek Computer INC. Engineer: Wayne_Chan

Size	Project Name	Rev
A3	904HD	1.3G

Date: Tuesday, July 01, 2008 Sheet 10 of 49

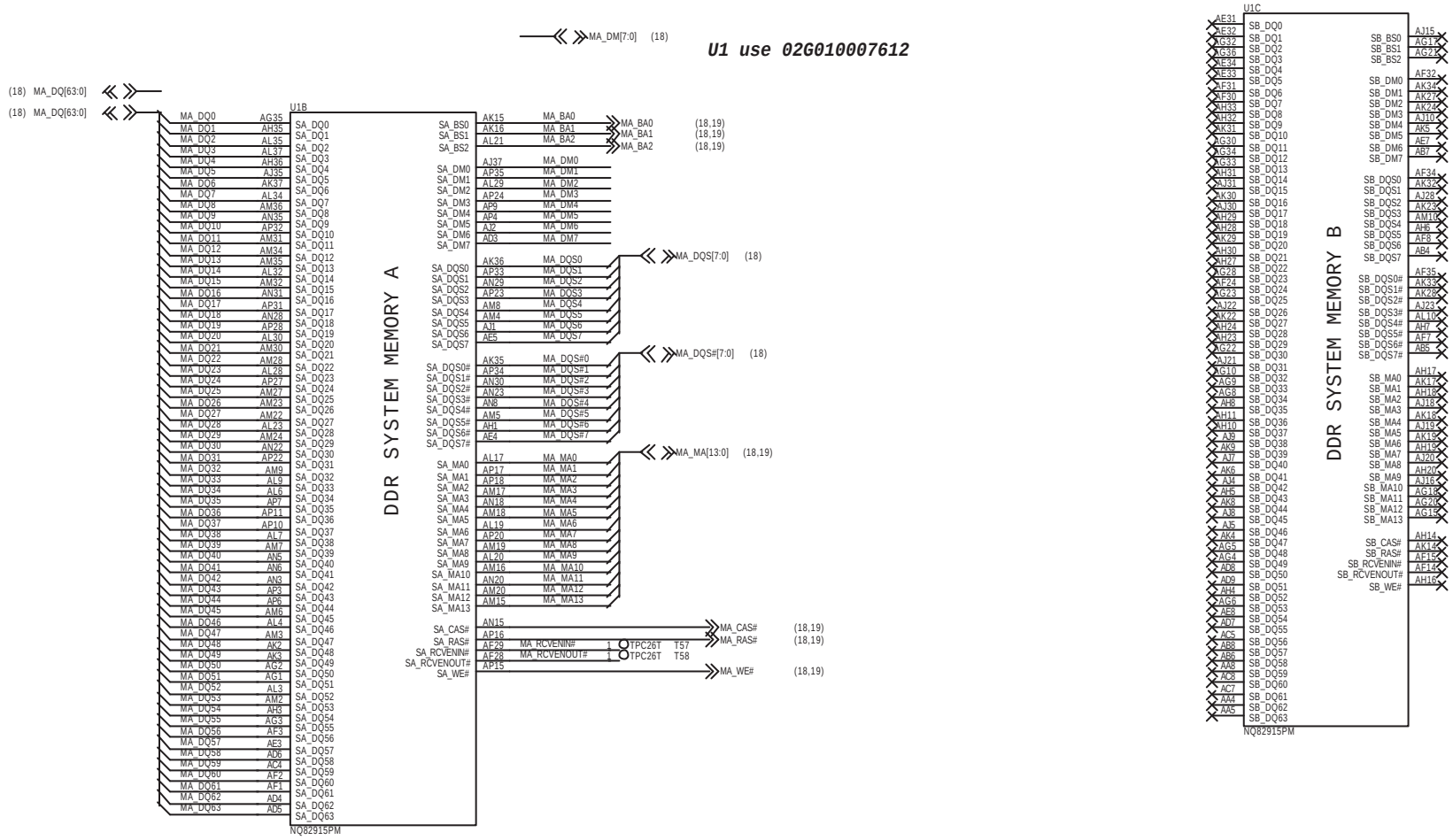

<Core Design>

ASUS	Title : 910GML_DRAM	
A S U S Tek Computer INC.	Engineer: Wayne_Chan	
Size A3	Project Name 904HD	Rev 1.3G
Date: Tuesday, July 01, 2008	Sheet 11 of 49	

http://hobi-elektronika.net

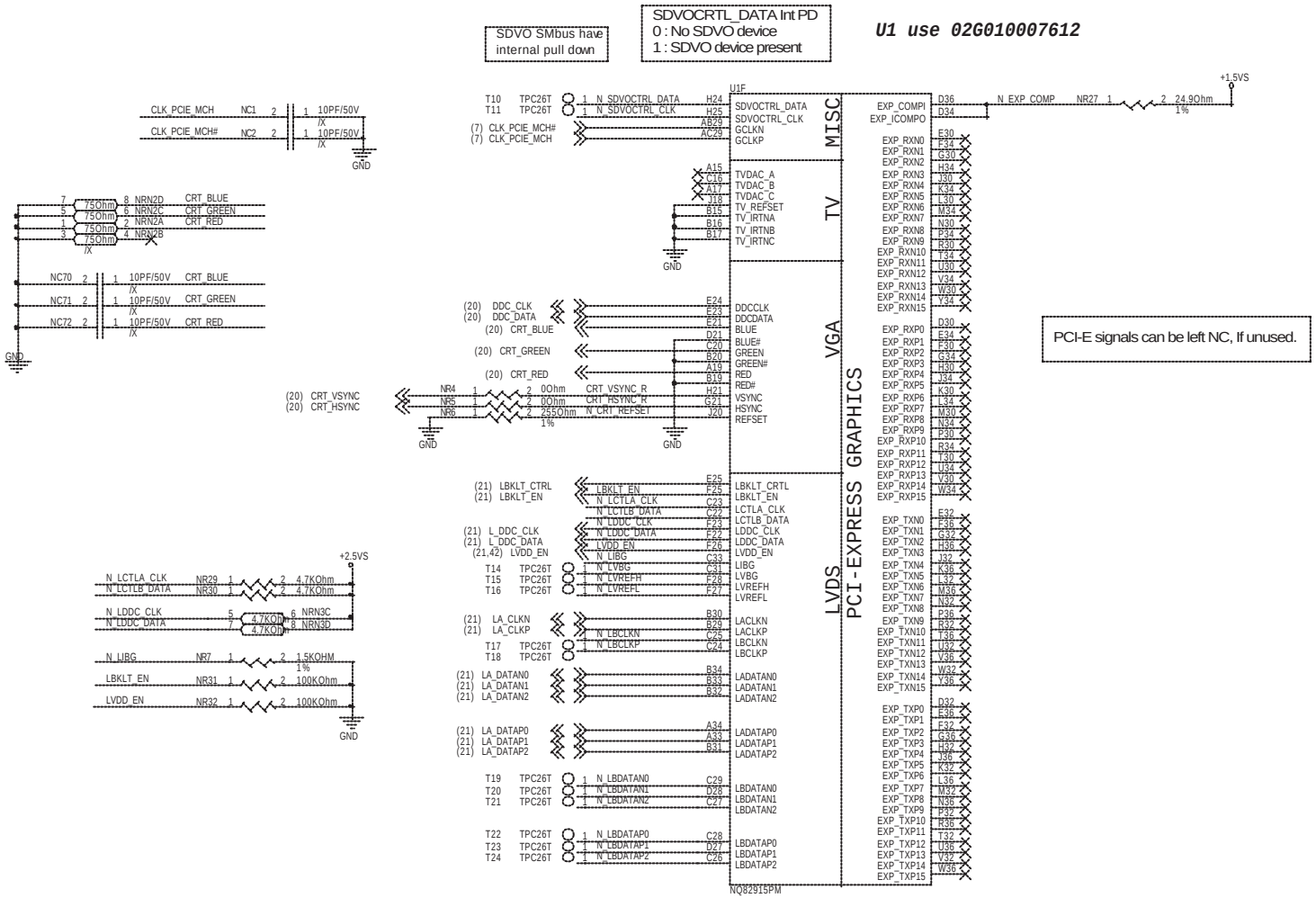

http://hobi-elektronika.net

<Core Design>

ASUS	Title : 910GML_VGA_LVDS	
A S U S Tek Computer INC.	Engineer: Wayne_Chan	
Size: A3	Project Name: 904HD	Rev: 1.3G
Date: Tuesday, July 01, 2008	Sheet 12 of 49	

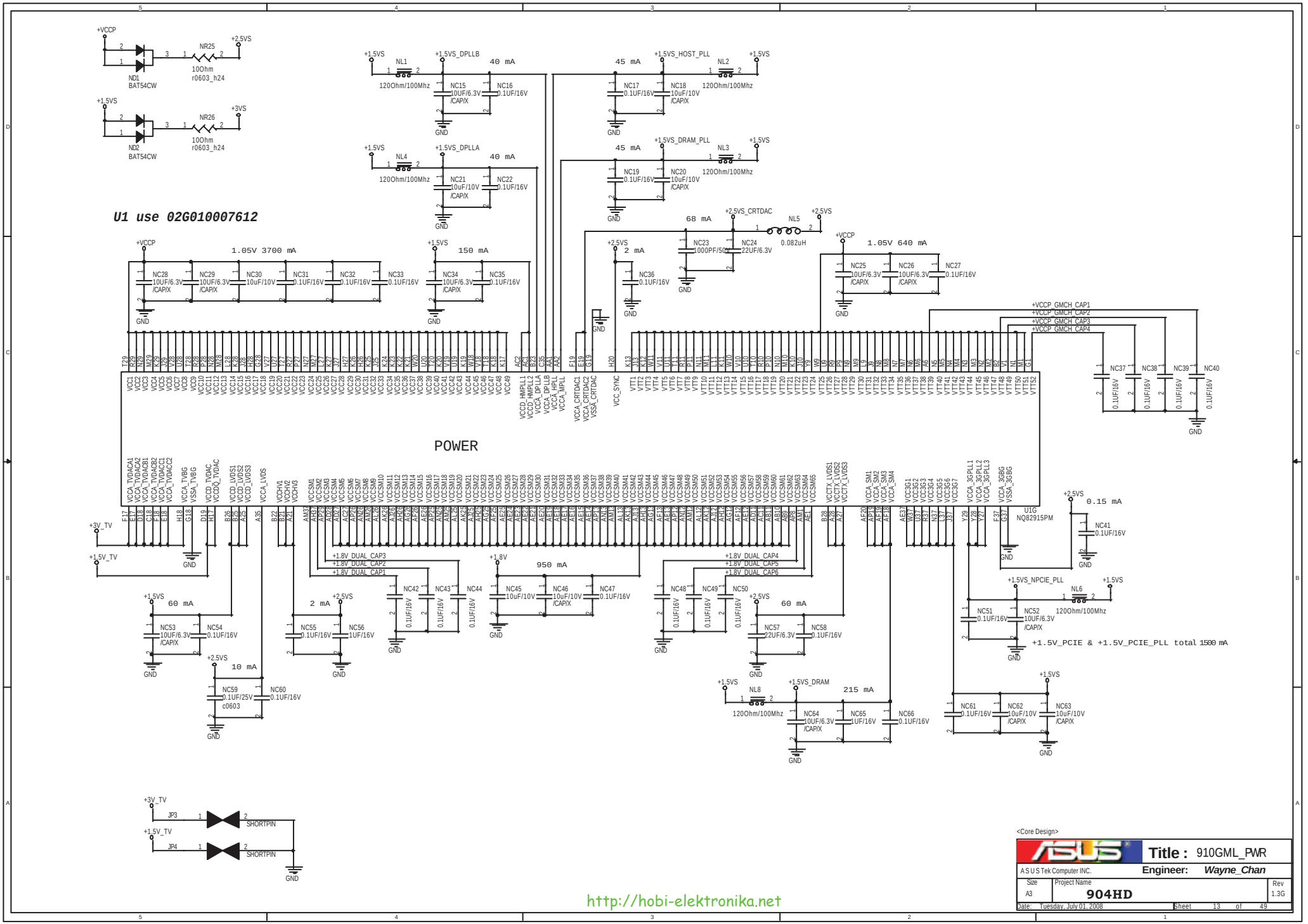
U1 use 02G010007612
POWER
U1G
NQ82915PM
1.05V 3700 mA
150 mA
1.05V 640 mA
+1.5V_PCIE & +1.5V_PCIE_PLL total 1500 mA
Title : 910GML_PWR
A S U S Tek Computer INC.
Engineer: Wayne_Chan
Size A3
Project Name 904HD
Rev 1.3G
Date: Tuesday, July 01, 2008
Sheet 13 of 49
http://hobi-elektronika.net

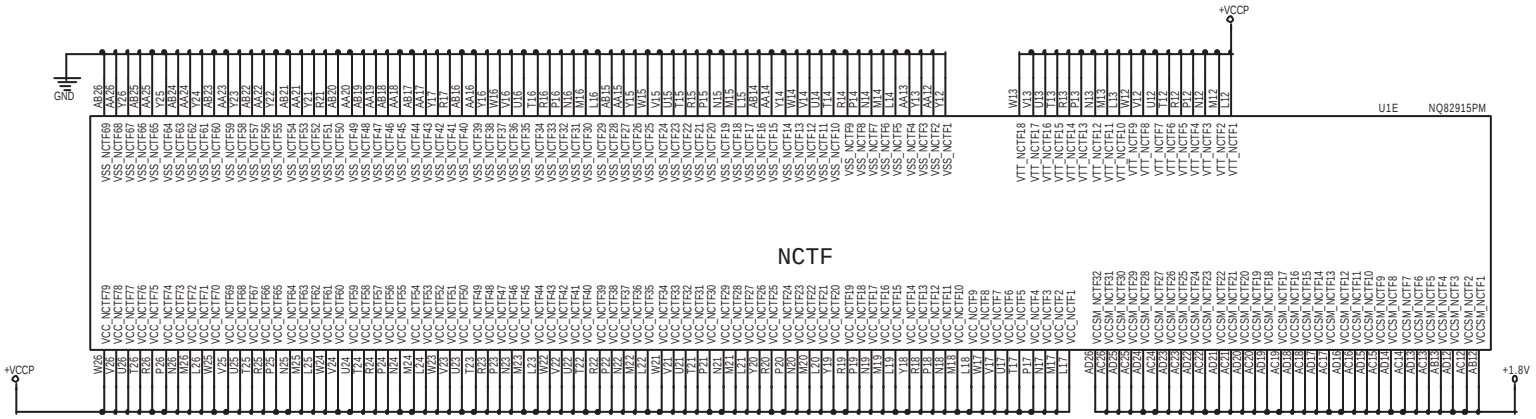

U1 use 02G010007612

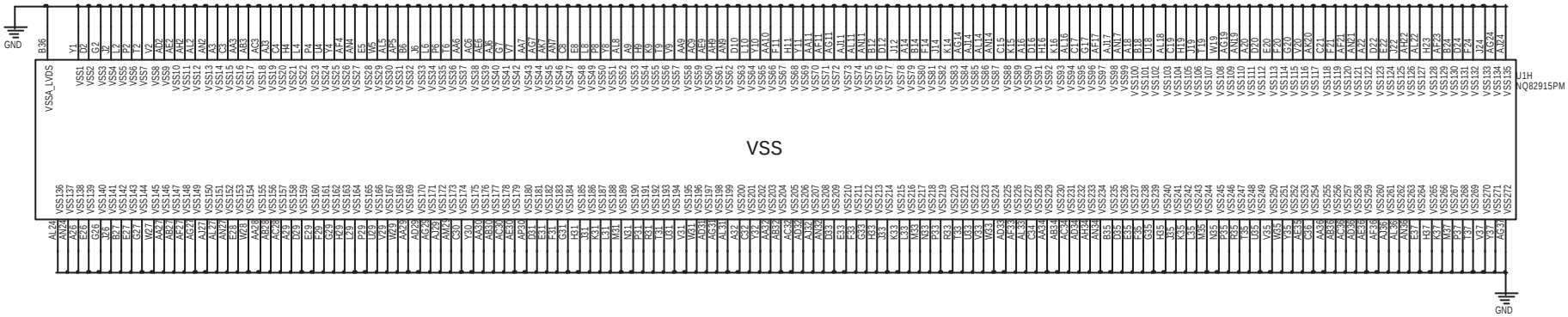

<Core Design>

ASUS	Title : 910GML_GND	
A S U S Tek Computer INC.	Engineer: *Wayne_Chan*	
Size A3	Project Name **904HD**	Rev 1.3G
Date: Tuesday, July 01, 2008	Sheet 14 of 49	

http://hobi-elektronika.net

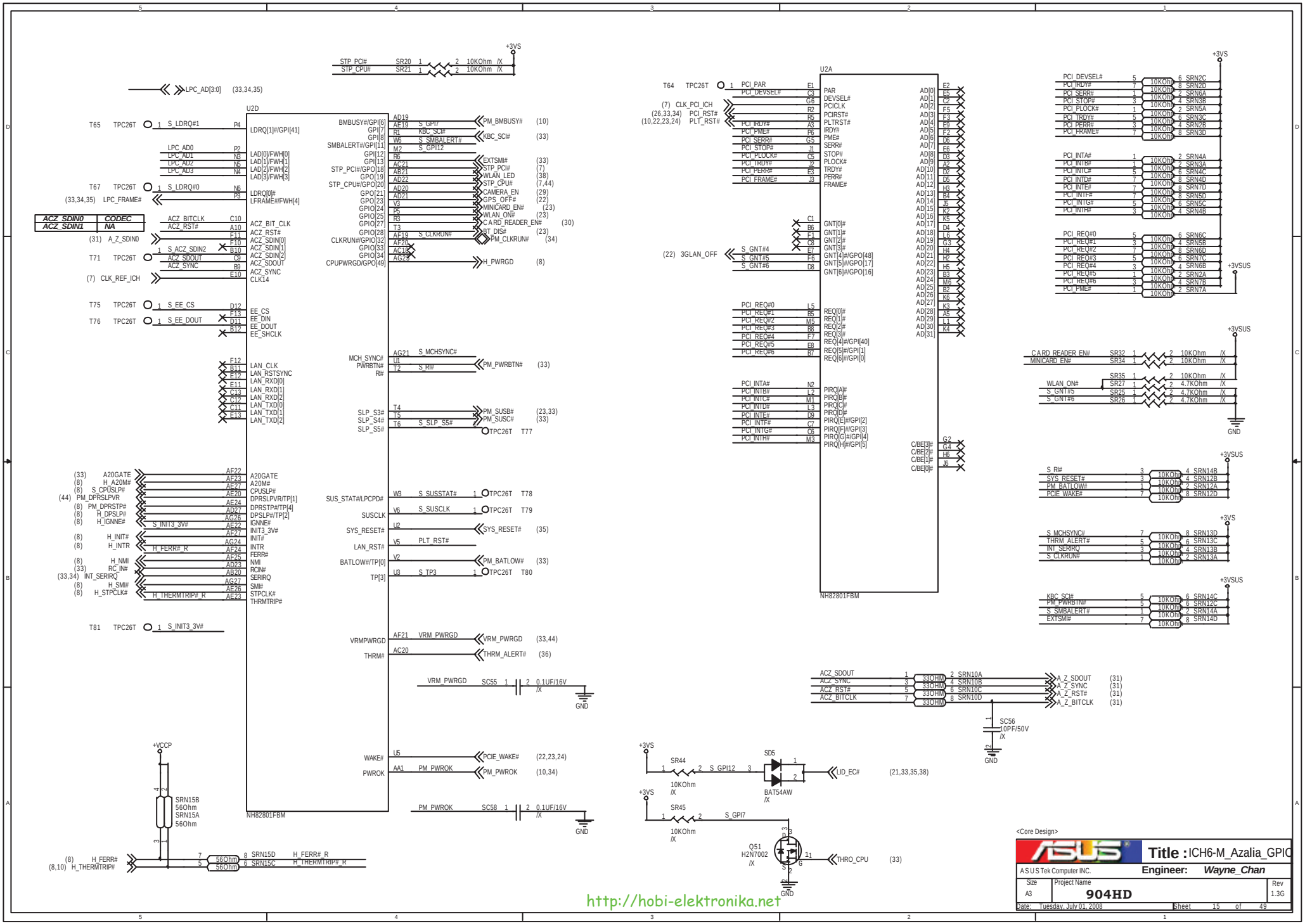
U2D
NH82801FBM
U2A
NH82801FBM
LPC_AD[3:0] (33,34,35)
LPC_FRAME# (33,34,35)
ACZ_SDIN0 CODEC
ACZ_SDIN1 NA
T65 TPC26T S_LDRQ#1
T67 TPC26T S_LDRQ#0
T71 TPC26T
T75 TPC26T S_EE_CS
T76 TPC26T S_EE_DOUT
T81 TPC26T S_INIT3_3V#
T64 TPC26T
(7) CLK_PCI_ICH
(26,33,34) PCI_RST#
(10,22,23,24) PLT_RST#
(22) 3GLAN_OFF
(31) A_Z_SDIN0
(7) CLK_REF_ICH
STP_PCI# SR20 10KOhm /X
STP_CPU# SR21 10KOhm /X
+3VS
+3VSUS
+VCCP
SRN15B 56Ohm
SRN15A 56Ohm
SRN15D H_FERR#_R
SRN15C H_THERMTRIP#_R
(8) H_FERR#
(8,10) H_THERMTRIP#
VRM_PWRGD SC55 0.1UF/16V /X
PM_PWROK SC58 0.1UF/16V /X
GND
SR44 10KOhm /X
SR45 10KOhm /X
SD5 BAT54AW /X
LID_EC# (21,33,35,38)
Q51 H2N7002 /X
THRO_CPU (33)
SC56 10PF/50V /X
A_Z_SDOUT (31)
A_Z_SYNC (31)
A_Z_RST# (31)
A_Z_BITCLK (31)
CARD_READER_EN# SR32 10KOhm /X
MINICARD_EN# SR34 10KOhm /X
SR35 10KOhm /X
WLAN_ON# SR27 4.7KOhm /X
S_GNT#5 SR25 4.7KOhm /X
S_GNT#6 SR26 4.7KOhm /X
PM_BMBUSY# (10)
KBC_SCI# (33)
EXTSMI# (33)
WLAN_LED (38)
STP_CPU# (7,44)
CAMERA_EN (29)
GPS_OFF# (22)
MINICARD_EN# (23)
WLAN_ON# (23)
CARD_READER_EN# (30)
BT_DIS# (23)
PM_CLKRUN# (34)
H_PWRGD (8)
PM_PWRBTN# (33)
PM_SUSB# (23,33)
PM_SUSC# (33)
SYS_RESET# (35)
PM_BATLOW# (33)
VRM_PWRGD (33,44)
THRM_ALERT# (36)
PCIE_WAKE# (22,23,24)
PM_PWROK (10,34)
http://hobi-elektronika.net
<Core Design>
ASUS
Title : ICH6-M_Azalia_GPIO
A S U S Tek Computer INC.
Engineer: Wayne_Chan
Size A3
Project Name 904HD
Rev 1.3G
Date: Tuesday, July 01, 2008
Sheet 15 of 49

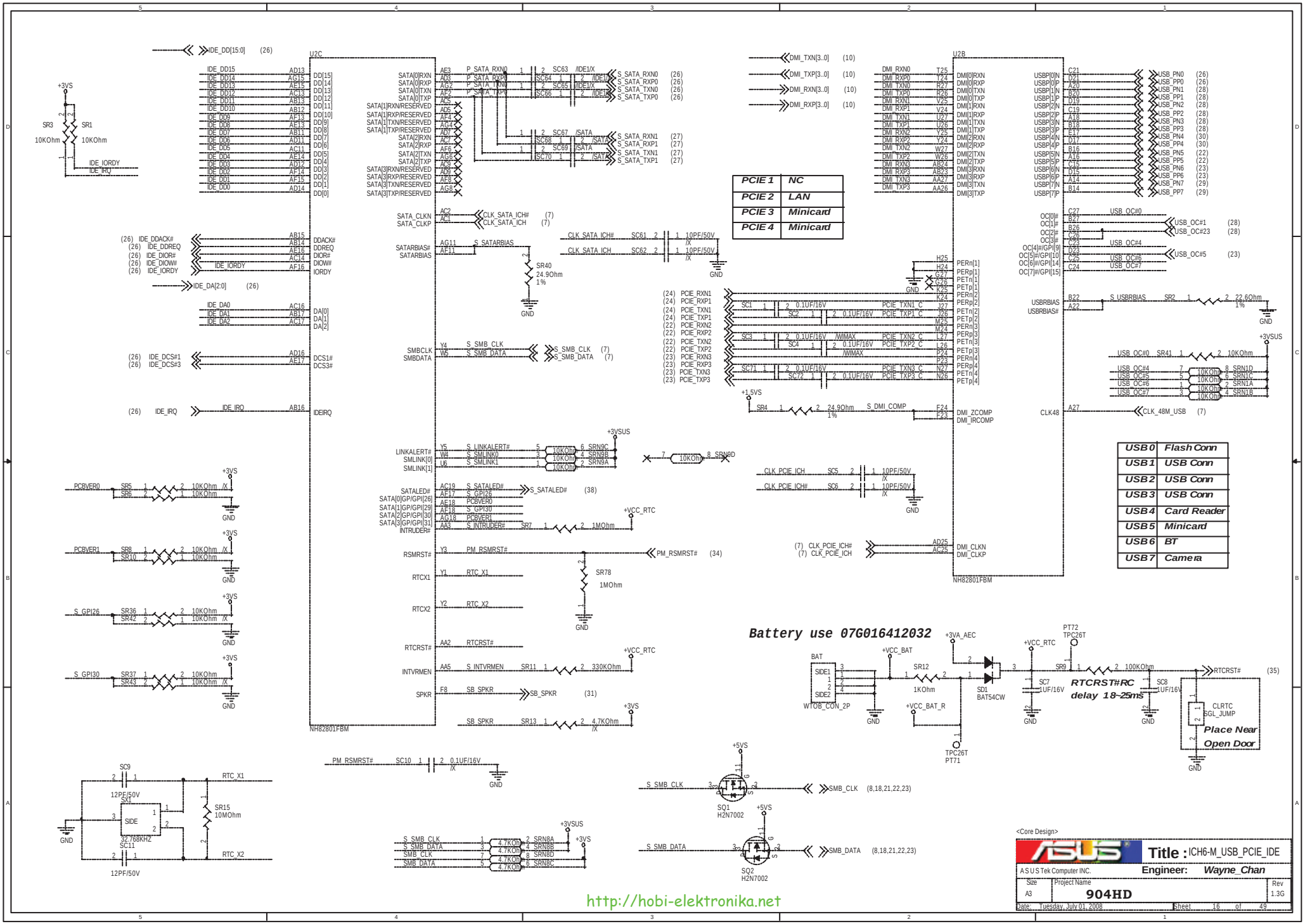
U2C
NH82801FBM
U2B
NH82801FBM
PCIE 1 NC
PCIE 2 LAN
PCIE 3 Minicard
PCIE 4 Minicard
USB 0 Flash Conn
USB 1 USB Conn
USB 2 USB Conn
USB 3 USB Conn
USB 4 Card Reader
USB 5 Minicard
USB 6 BT
USB 7 Camera
Battery use 07G016412032
RTCRST#RC delay 18~25ms
Place Near Open Door
BAT
WTOB_CON_2P
BAT54CW
CLRTC
SGL_JUMP
SQ1 H2N7002
SQ2 H2N7002
PT72 TPC26T
PT71 TPC26T
SR3 10KOhm
SR1 10KOhm
SR40 24.9Ohm 1%
SR78 1MOhm
SR15 10MOhm
SX1 32.768KHZ
SC9 12PF/50V
SC11 12PF/50V
SR4 24.9Ohm 1%
SR2 22.6Ohm 1%
SR41 10KOhm
SR9 100KOhm
SR12 1KOhm
SC7 1UF/16V
SC8 1UF/16V
SR7 1MOhm
SR11 330KOhm
SR13 4.7KOhm
SC10 0.1UF/16V
SC61 10PF/50V
SC62 10PF/50V
SC5 10PF/50V
SC6 10PF/50V
SC1 0.1UF/16V
SC2 0.1UF/16V
SC3 0.1UF/16V
SC4 0.1UF/16V
SC71 0.1UF/16V
SC72 0.1UF/16V
SC63 /IDE1/X
SC64 /IDE1/X
SC65 /IDE1/X
SC66 /IDE1/X
SC67 /SATA
SC68 /SATA
SC69 /SATA
SC70 /SATA
SR56 10KOhm
SR57 10KOhm
SR58 10KOhm
SR59 10KOhm
SR60 10KOhm
SR61 10KOhm
SR62 10KOhm
SR63 10KOhm
SR64 10KOhm
SR65 10KOhm
SR66 10KOhm
SR67 10KOhm
SR68 10KOhm
SR69 10KOhm
SR70 10KOhm
SR71 10KOhm
SR72 10KOhm
SR73 10KOhm
SR74 10KOhm
SR75 10KOhm

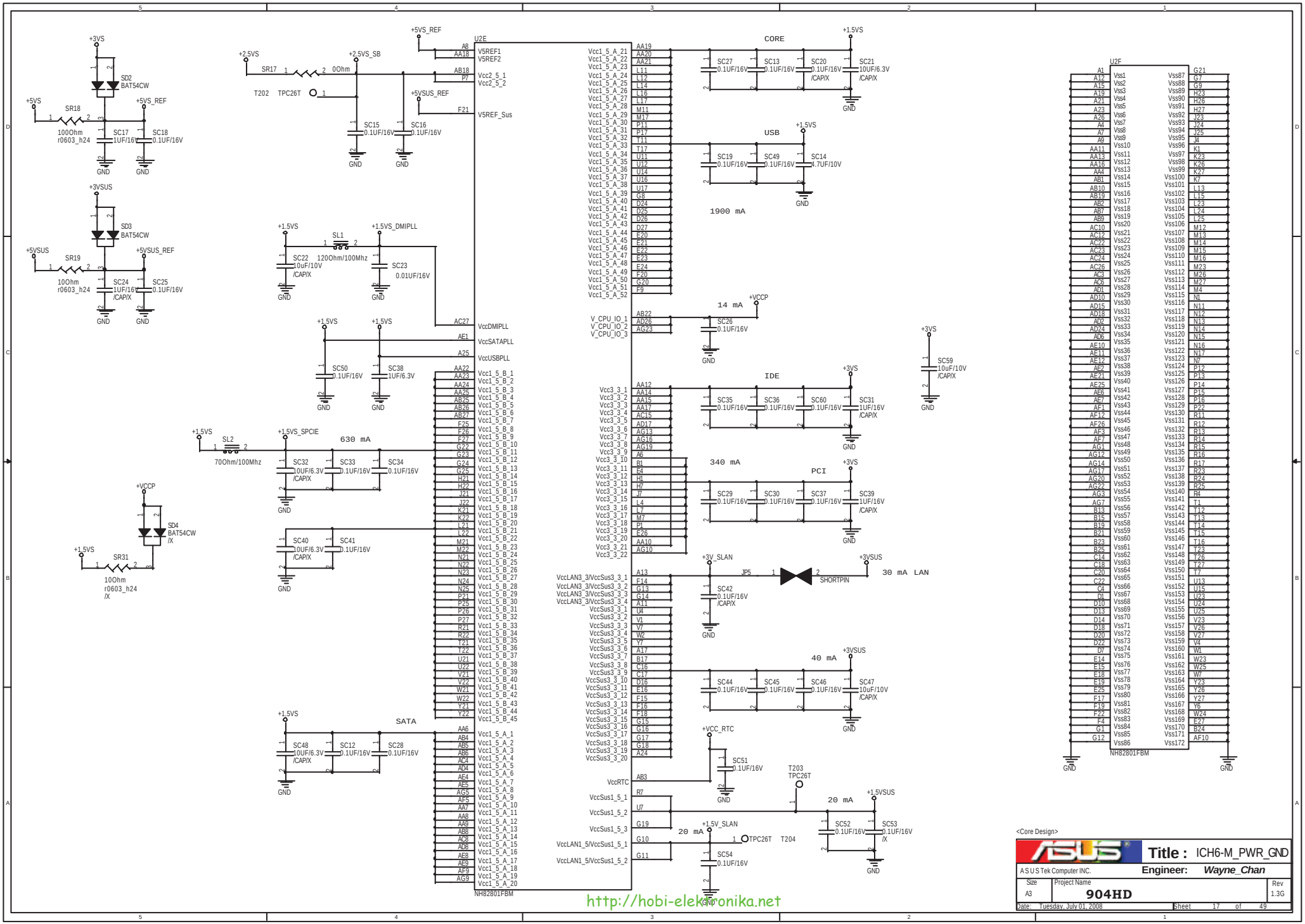
U2E
NH82801FBM
U2F
NH82801FBM
CORE
USB
IDE
PCI
SATA
1900 mA
14 mA
630 mA
340 mA
30 mA LAN
40 mA
20 mA
20 mA
+3VS
+5VS
+5VS_REF
+5VSUS
+5VSUS_REF
+2.5VS
+2.5VS_SB
+5VSUS_REF
+1.5VS
+1.5VS_DMIPLL
+1.5VS_SPCIE
+VCCP
+3V_SLAN
+3VSUS
+VCC_RTC
+1.5V_SLAN
+1.5VSUS
SR17 0Ohm
T202 TPC26T
SR18 100Ohm r0603_h24
SR19 10Ohm r0603_h24
SR31 10Ohm r0603_h24 /X
SD2 BAT54CW
SD3 BAT54CW
SD4 BAT54CW /X
SL1 120Ohm/100Mhz
SL2 70Ohm/100Mhz
JP5 SHORTPIN
T203 TPC26T
T204 TPC26T
SC59 10uF/10V /CAP/X
GND
http://hobi-elektronika.net
<Core Design>
Title : ICH6-M_PWR_GND
A S U S Tek Computer INC.
Engineer: Wayne_Chan
Size A3
Project Name 904HD
Rev 1.3G
Date: Tuesday, July 01, 2008
Sheet 17 of 49

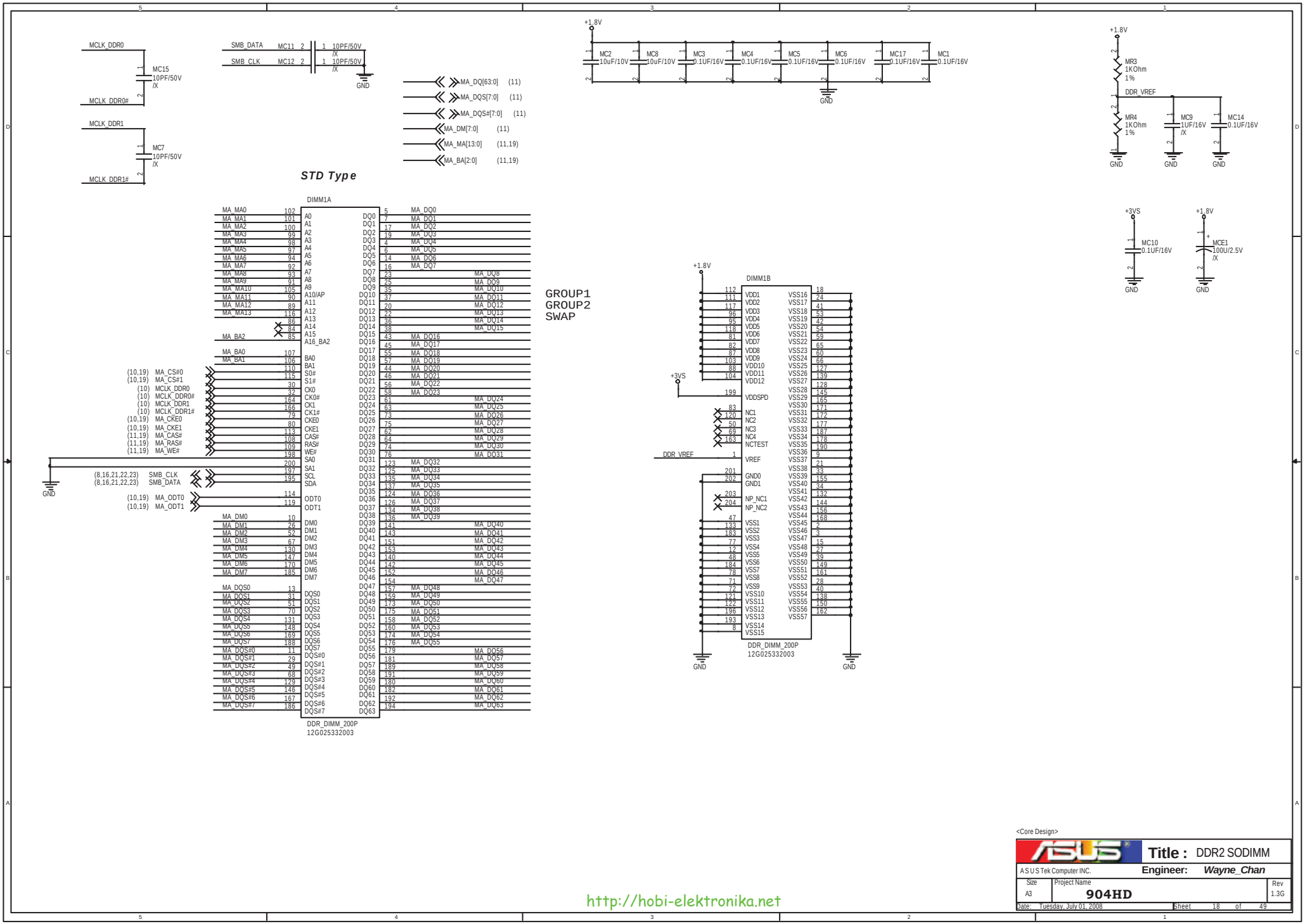

<Core Design>

ASUS	Title : DDR2 SODIMM	
A S U S Tek Computer INC.	Engineer: *Wayne_Chan*	
Size: A3	Project Name: **904HD**	Rev: 1.3G
Date: Tuesday, July 01, 2008	Sheet 18 of 49	

http://hobi-elektronika.net

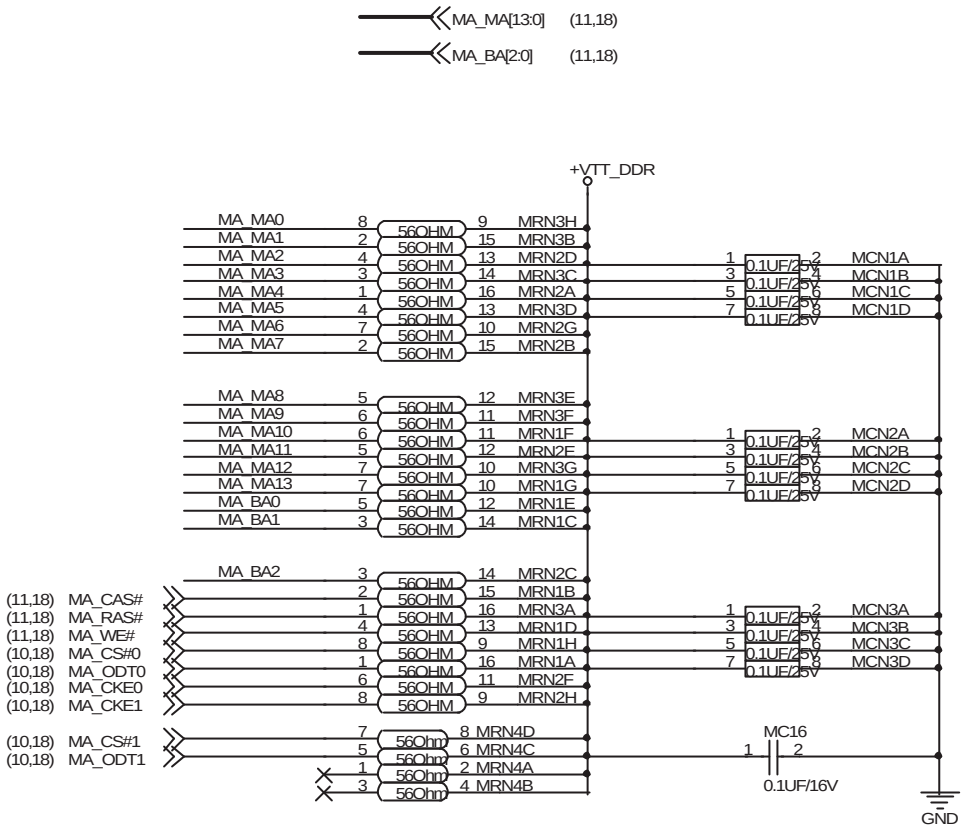

<Core Design>

ASUS	Title : DDR2_Termination	
ASUSTek Computer INC.	Engineer: Wayne_Chan	
Size A4	Project Name 904HD	Rev 1.3G
Date: Tuesday, July 01, 2008	Sheet 19 of 49	

http://hobi-elektronika.net

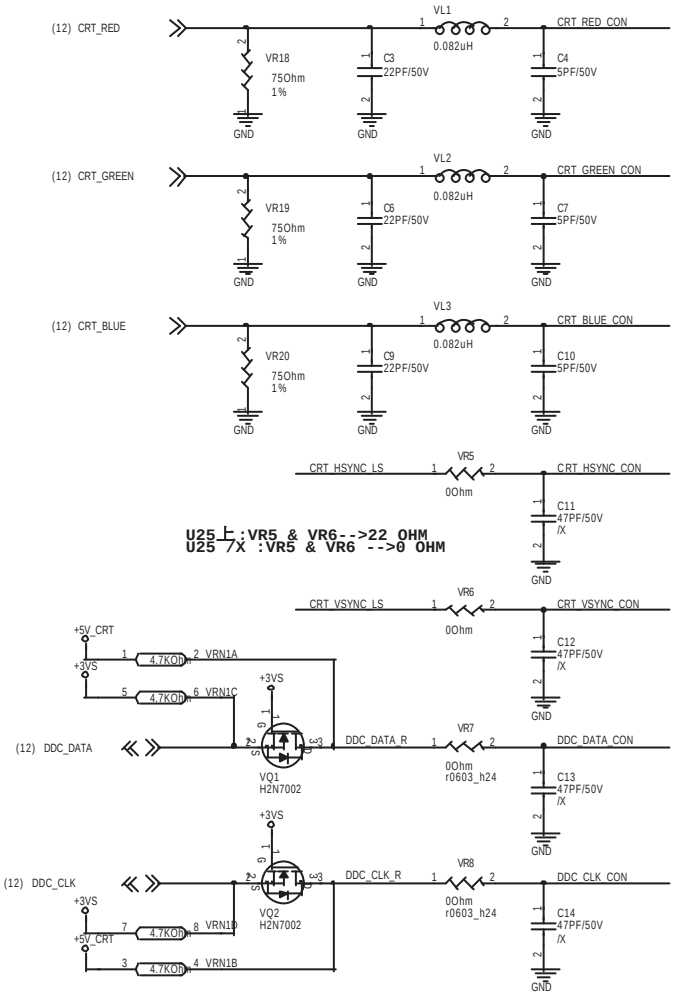

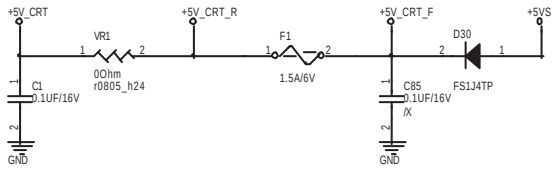

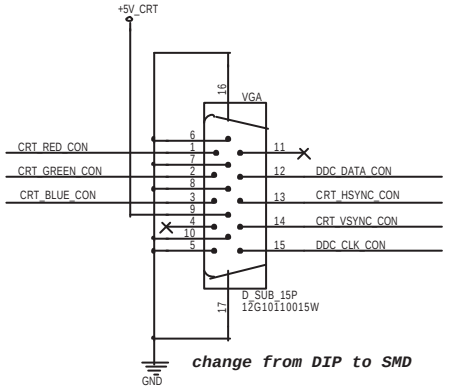

change from DIP to SMD

VGA use 12G10110015W & 12G10110015N

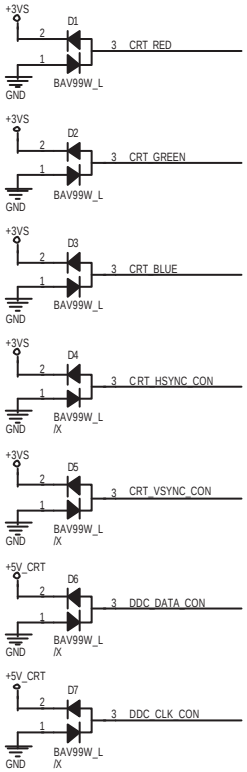

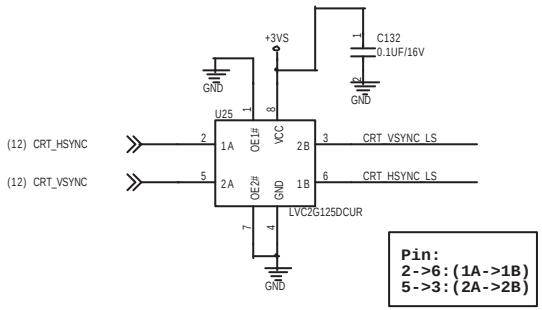

Pin:
2->6:(1A->1B)
5->3:(2A->2B)

http://hobi-elektronika.net

<Core Design>

ASUS	Title : Onboard VGA	
A S U S Tek Computer INC.	Engineer: *Wayne_Chan*	
Size: A3	Project Name: **904HD**	Rev: 1.3G
Date: Tuesday, July 01, 2008	Sheet 20 of 49	

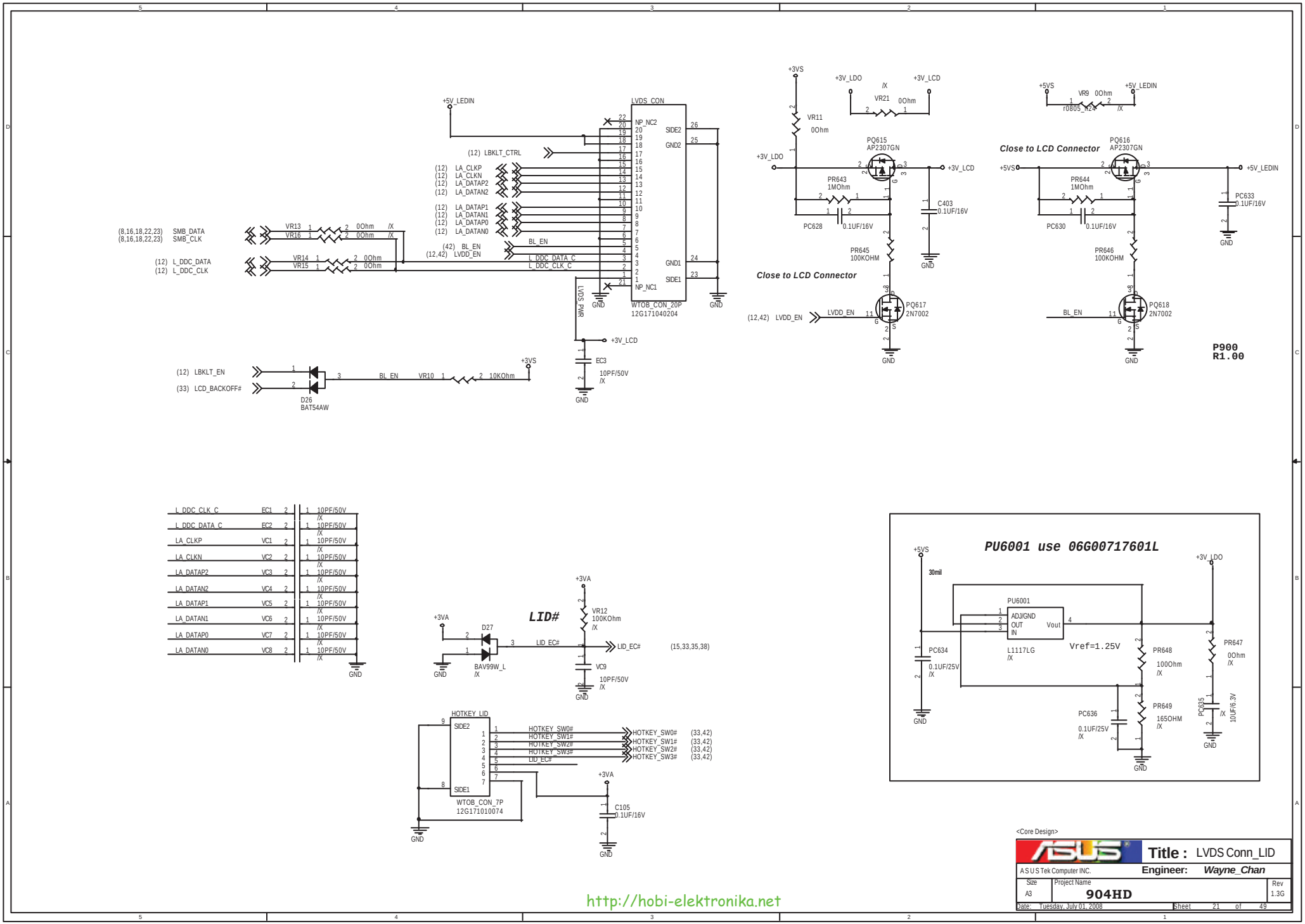

http://hobi-elektronika.net

<Core Design>

ASUS	Title : LVDS Conn_LID	
A S U S Tek Computer INC.	Engineer: Wayne_Chan	
Size A3	Project Name 904HD	Rev 1.3G
Date: Tuesday, July 01, 2008	Sheet 21 of 49	

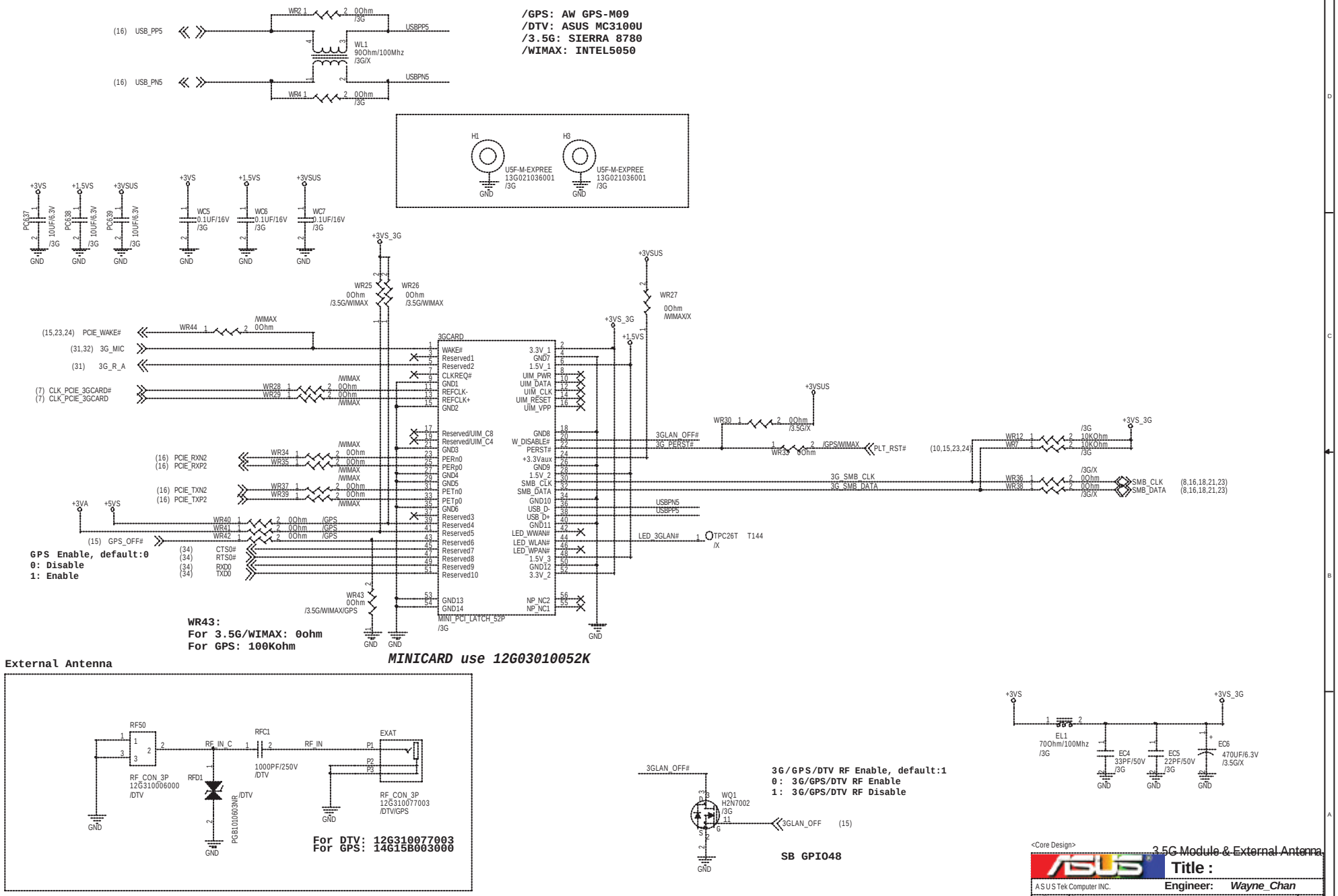

http://hobi-elektronika.net

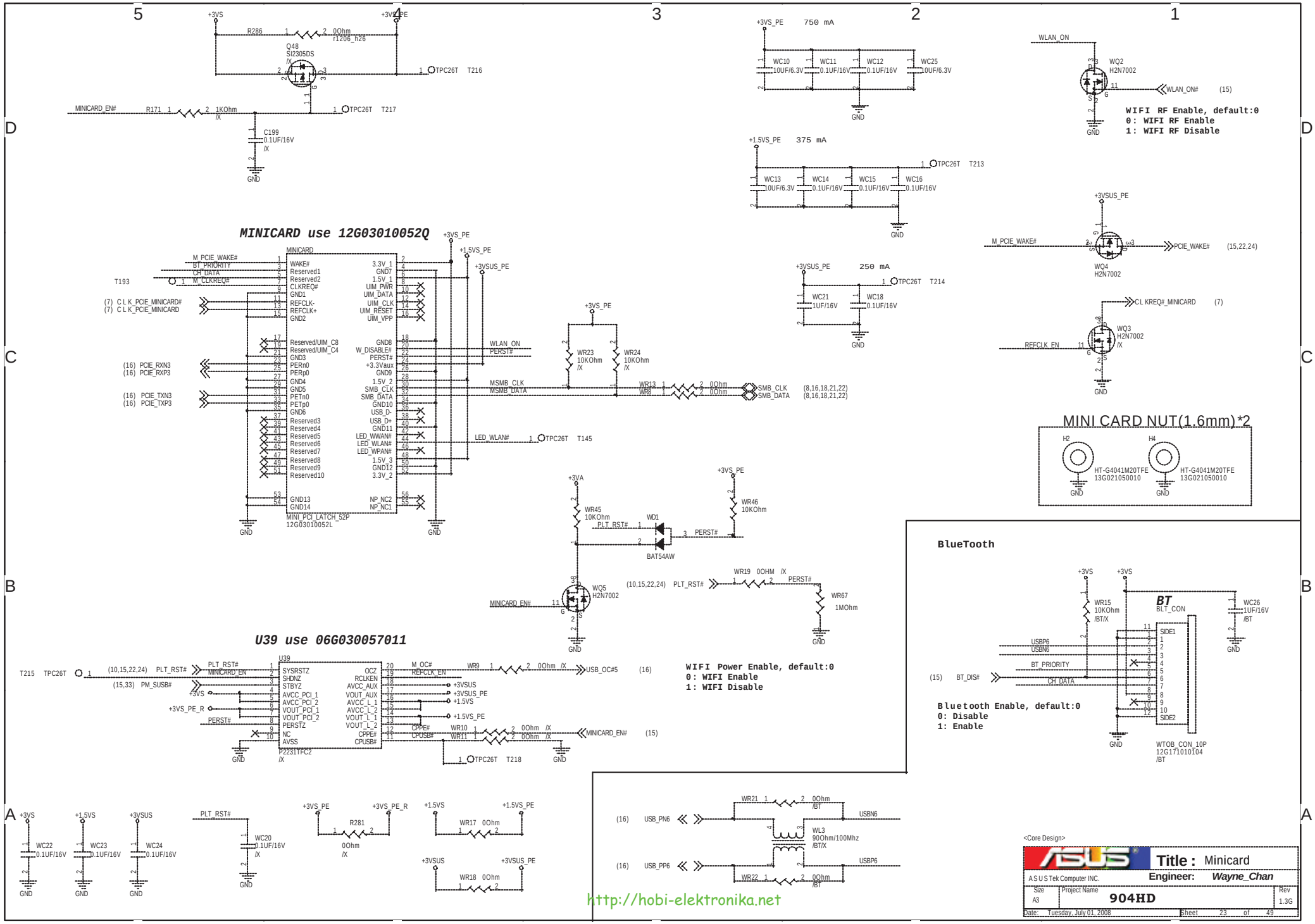
MINICARD use 12G030010052Q
U39 use 06G030057011
MINI CARD NUT(1.6mm)*2
BlueTooth
WIFI RF Enable, default:0
0: WIFI RF Enable
1: WIFI RF Disable
WIFI Power Enable, default:0
0: WIFI Enable
1: WIFI Disable
Bluetooth Enable, default:0
0: Disable
1: Enable
Title : Minicard
Engineer: Wayne_Chan
A S U S Tek Computer INC.
Size A3
Project Name 904HD
Rev 1.3G
Date: Tuesday, July 01, 2008
Sheet 23 of 49
http://hobi-elektronika.net

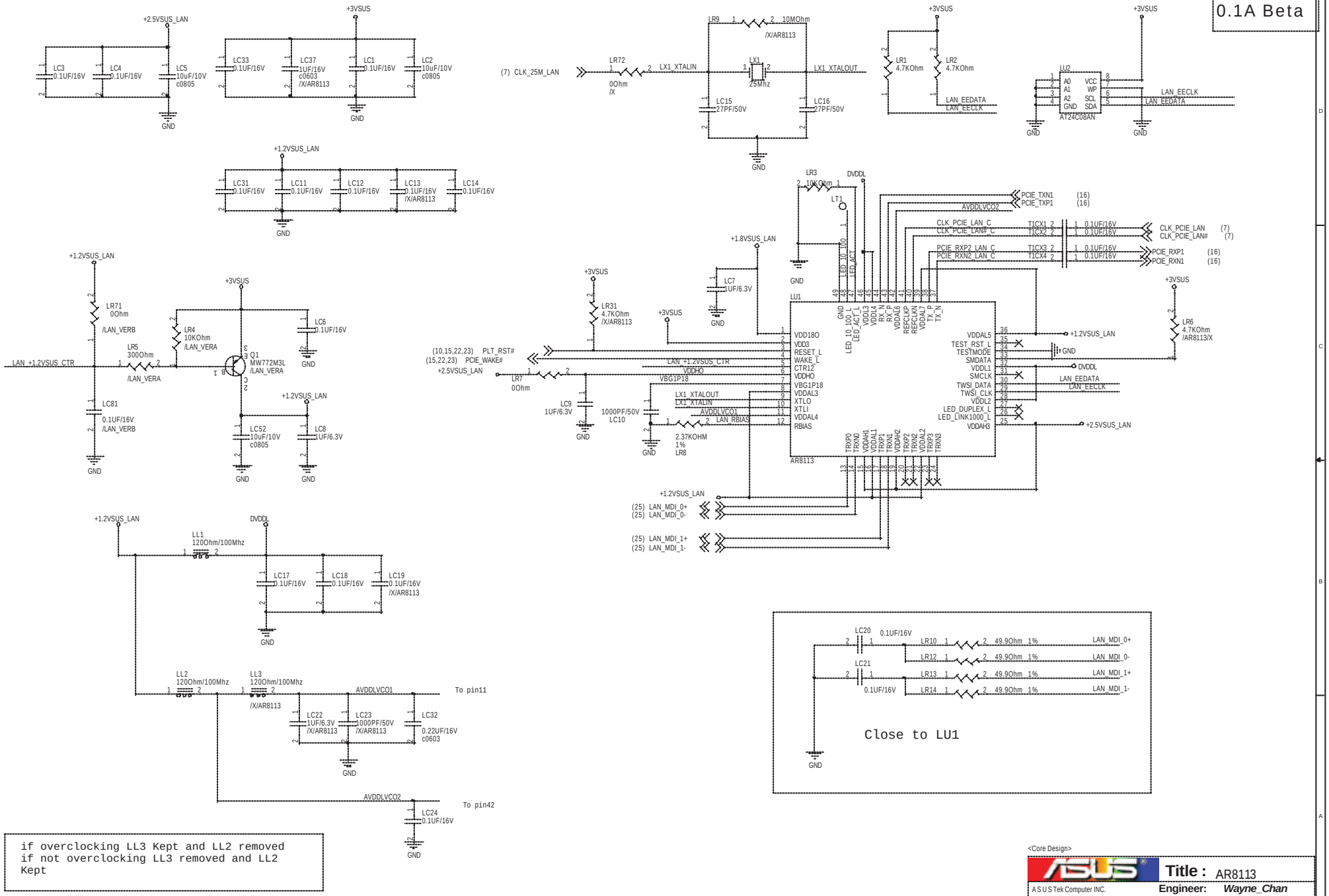

if overclocking LL3 Kept and LL2 removed
if not overclocking LL3 removed and LL2 Kept

http://hobi-elektronika.net

<Core Design>

ASUS	Title : AR8113	
A S U S Tek Computer INC.	Engineer: Wayne_Chan	
Size A3	Project Name 904HD	Rev 1.3G
Date: Tuesday, July 01, 2008	Sheet 24 of 49	

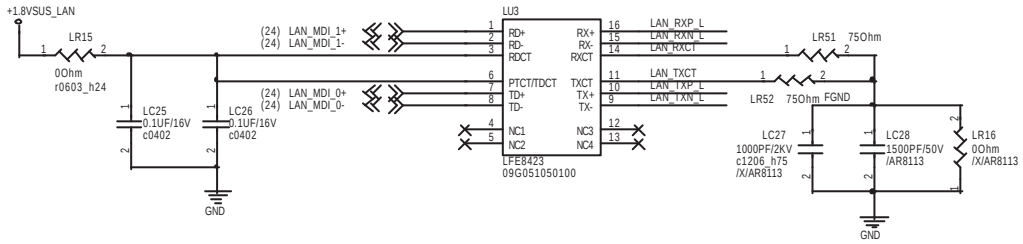

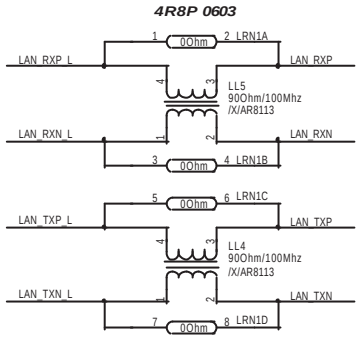

LAN connector: 12G148301086

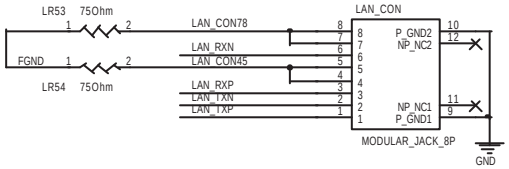

http://hobi-elektronika.net

<Core Design>

ASUS	Title : MDC_RJ45	
A S U S Tek Computer INC.	Engineer: Wayne_Chan	
Size: A3	Project Name: 904HD	Rev: 1.3G
Date: Tuesday, July 01, 2008	Sheet 25 of 49	

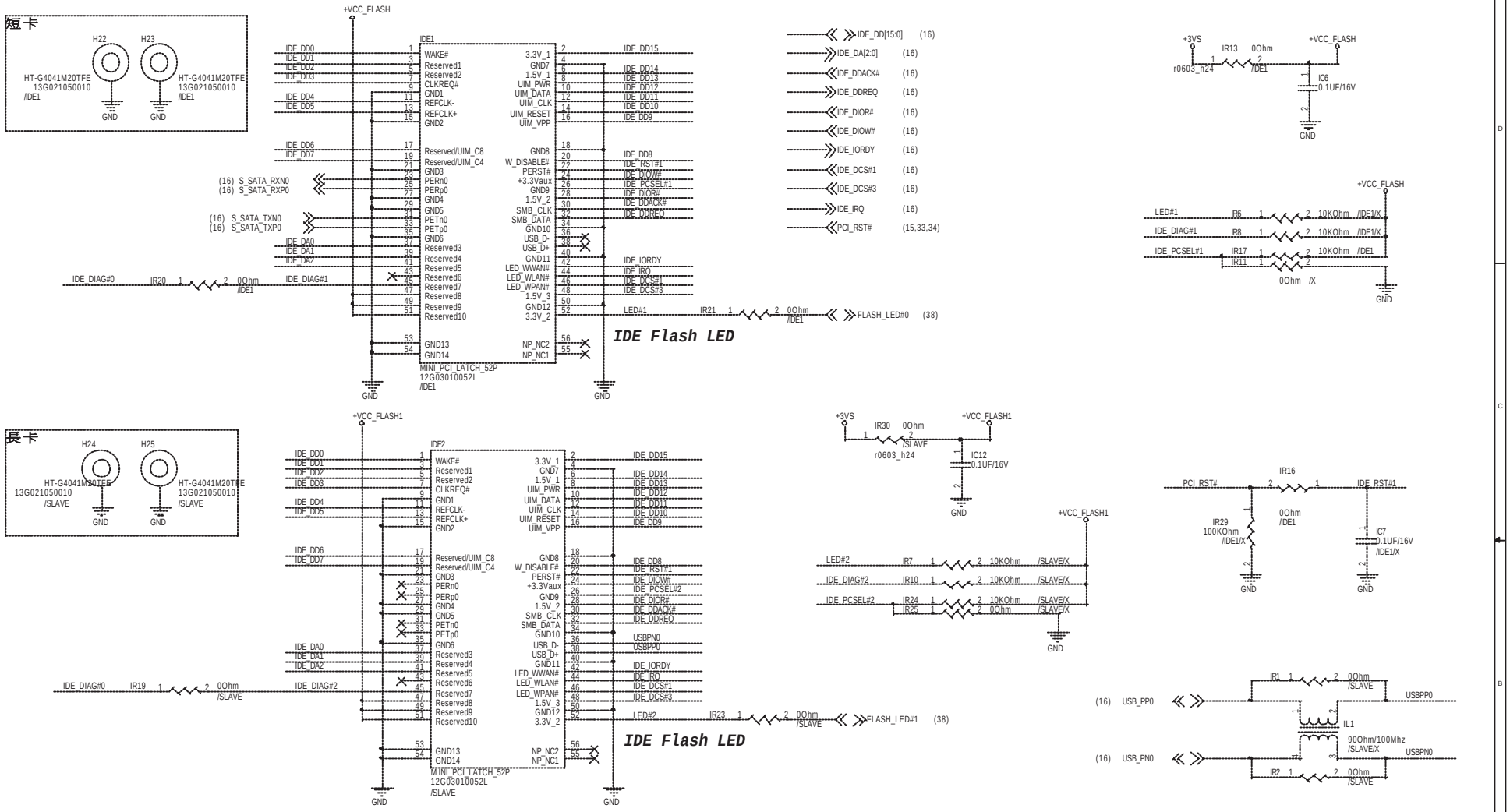

Naming Rule:
IC:IU?
R:IR?
C:IC?
L:IL?

<Core Design>

ASUS	**Title :** Flash Conn	
A S U S Tek Computer INC.	**Engineer:** *Wayne_Chan*	
Size: A3	Project Name: **904HD**	Rev: 1.3G
Date: Tuesday, July 01, 2008	Sheet 26 of 49	

http://hobi-elektronika.net

Change ODD to SATA IF

SATA HDD Connector

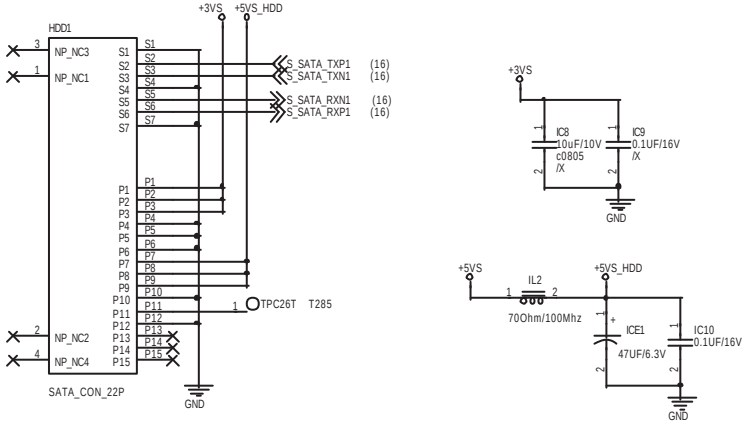

http://hobi-elektronika.net

<Core Design>

ASUS	Title : HD + Flash Conn	
A S U S T ek Computer INC.	Engineer: *Wayne_Chan*	
Size A3	Project Name 904HD	Rev 1.3G
Date: Tuesday, July 01, 2008	Sheet 27 of 49	

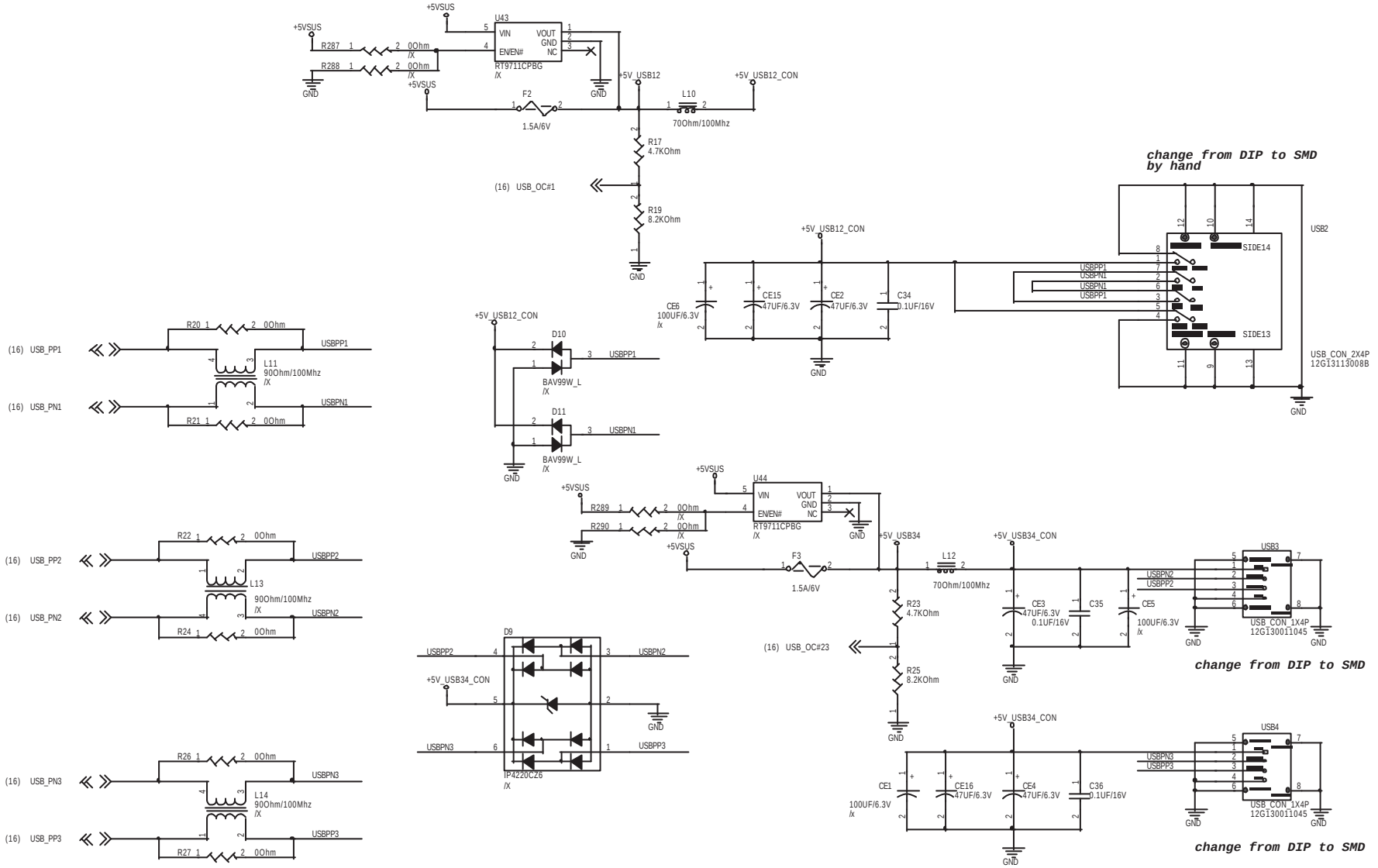

http://hobi-elektronika.net

<Core Design>

ASUS	Title : USB Port	
A S U S Tek Computer INC.	Engineer: Wayne_Chan	
Size A3	Project Name 904HD	Rev 1.3G
Date: Tuesday, July 01, 2008	Sheet 28 of 49	

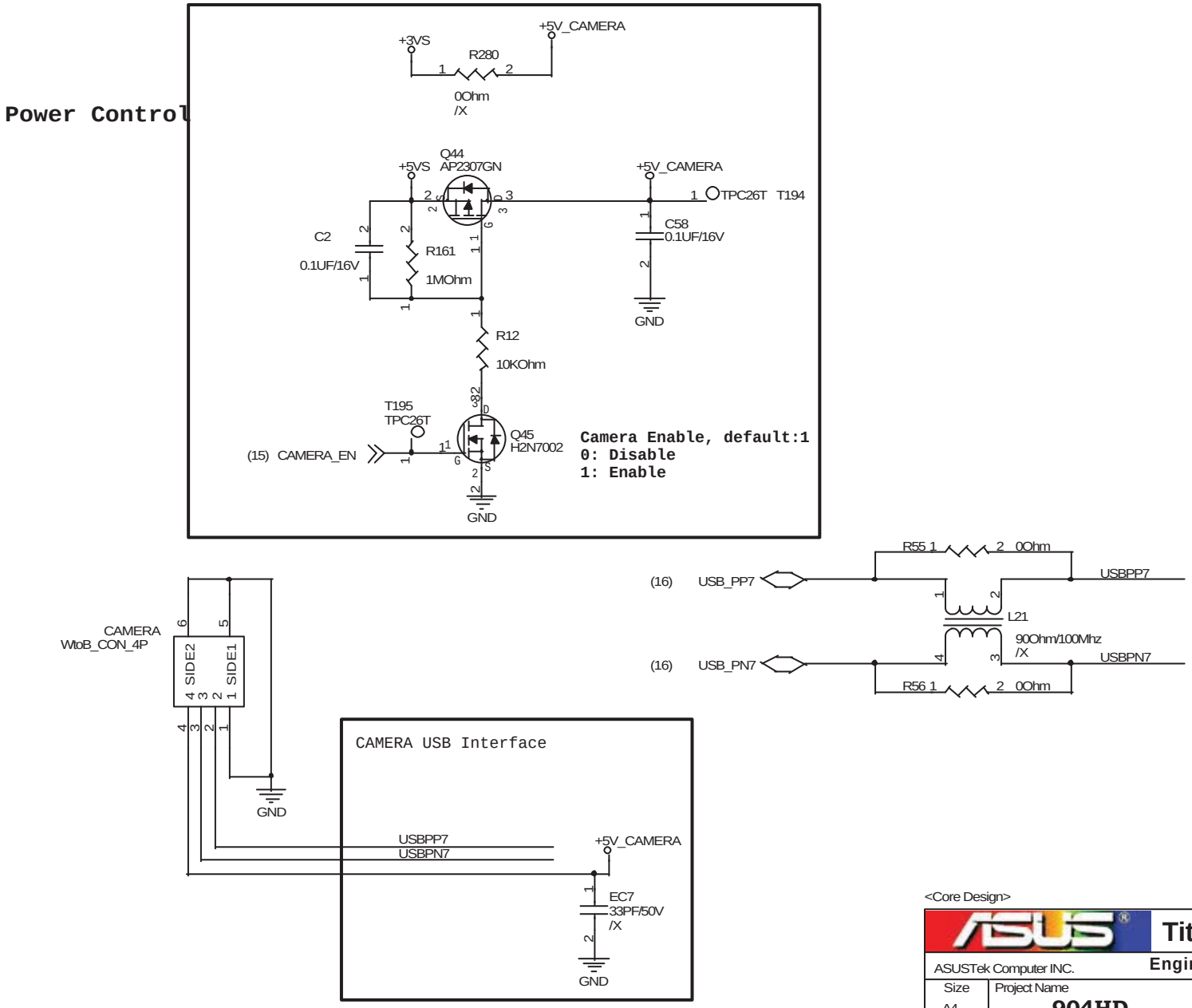

http://hobi-elektronika.net

<Core Design>

ASUS	Title : Camera Power	
ASUSTek Computer INC.	Engineer: Wayne_Chan	
Size A4	Project Name 904HD	Rev 1.3G
Date: Tuesday, July 01, 2008	Sheet 29 of 49	

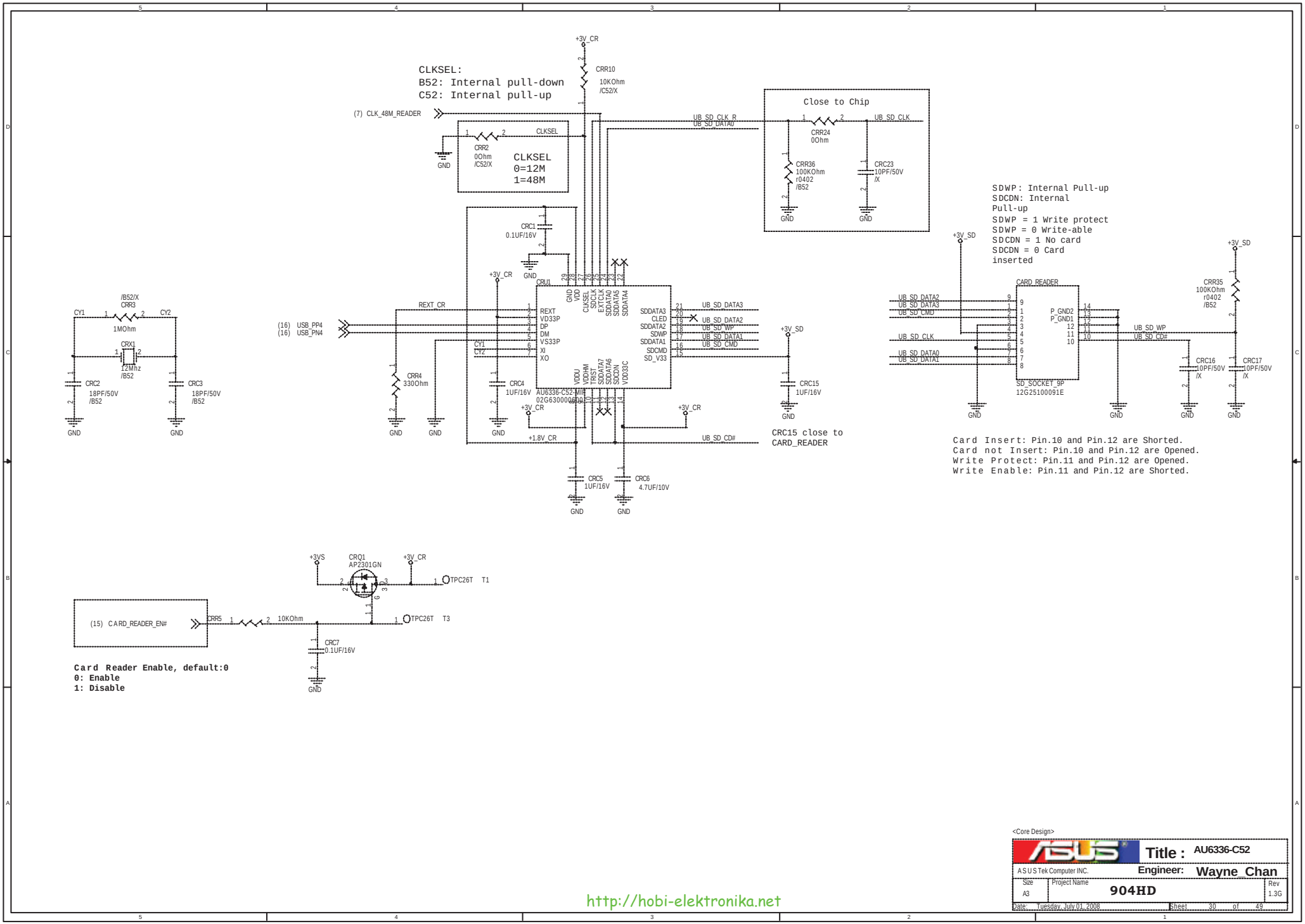
CLKSEL:
B52: Internal pull-down
C52: Internal pull-up
+3V_CR
CRR10
10KOhm
/C52/X
(7) CLK_48M_READER
CLKSEL
CRR2
0Ohm
/C52/X
CLKSEL
0=12M
1=48M
GND
UB_SD_CLK_R
UB_SD_DATA0
Close to Chip
UB_SD_CLK
CRR24
0Ohm
CRR36
100KOhm
r0402
/B52
CRC23
10PF/50V
/X
CRC1
0.1UF/16V
CRU1
REXT_CR
(16) USB_PP4
(16) USB_PN4
REXT
VD33P
DP
DM
VS33P
XI
XO
SDDATA3
CLED
SDDATA2
SDWP
SDDATA1
SDCMD
SD_V33
UB_SD_DATA3
UB_SD_DATA2
UB_SD_WP
UB_SD_DATA1
UB_SD_CMD
UB_SD_CD#
AU6336-C52-MIR
02G63000060101
CRR4
330Ohm
CRC4
1UF/16V
+1.8V_CR
CRC5
1UF/16V
CRC6
4.7UF/10V
+3V_SD
CRC15
1UF/16V
CRC15 close to
CARD_READER
CY1
CY2
/B52/X
CRR3
1MOhm
CRX1
12Mhz
/B52
CRC2
18PF/50V
/B52
CRC3
18PF/50V
/B52
SDWP: Internal Pull-up
SDCDN: Internal
Pull-up
SDWP = 1 Write protect
SDWP = 0 Write-able
SDCDN = 1 No card
SDCDN = 0 Card
inserted
CARD_READER
UB_SD_DATA2
UB_SD_DATA3
UB_SD_CMD
UB_SD_CLK
UB_SD_DATA0
UB_SD_DATA1
P_GND2
P_GND1
UB_SD_WP
UB_SD_CD#
SD_SOCKET_9P
12G25100091E
CRR35
100KOhm
r0402
/B52
CRC16
10PF/50V
/X
CRC17
10PF/50V
/X
Card Insert: Pin.10 and Pin.12 are Shorted.
Card not Insert: Pin.10 and Pin.12 are Opened.
Write Protect: Pin.11 and Pin.12 are Opened.
Write Enable: Pin.11 and Pin.12 are Shorted.
+3VS
CRQ1
AP2301GN
TPC26T T1
TPC26T T3
(15) CARD_READER_EN#
CRR5
10KOhm
CRC7
0.1UF/16V
Card Reader Enable, default:0
0: Enable
1: Disable
<Core Design>
Title : AU6336-C52
ASUSTek Computer INC.
Engineer: Wayne_Chan
Size A3
Project Name 904HD
Rev 1.3G
Date: Tuesday, July 01, 2008
Sheet 30 of 49
http://hobi-elektronika.net

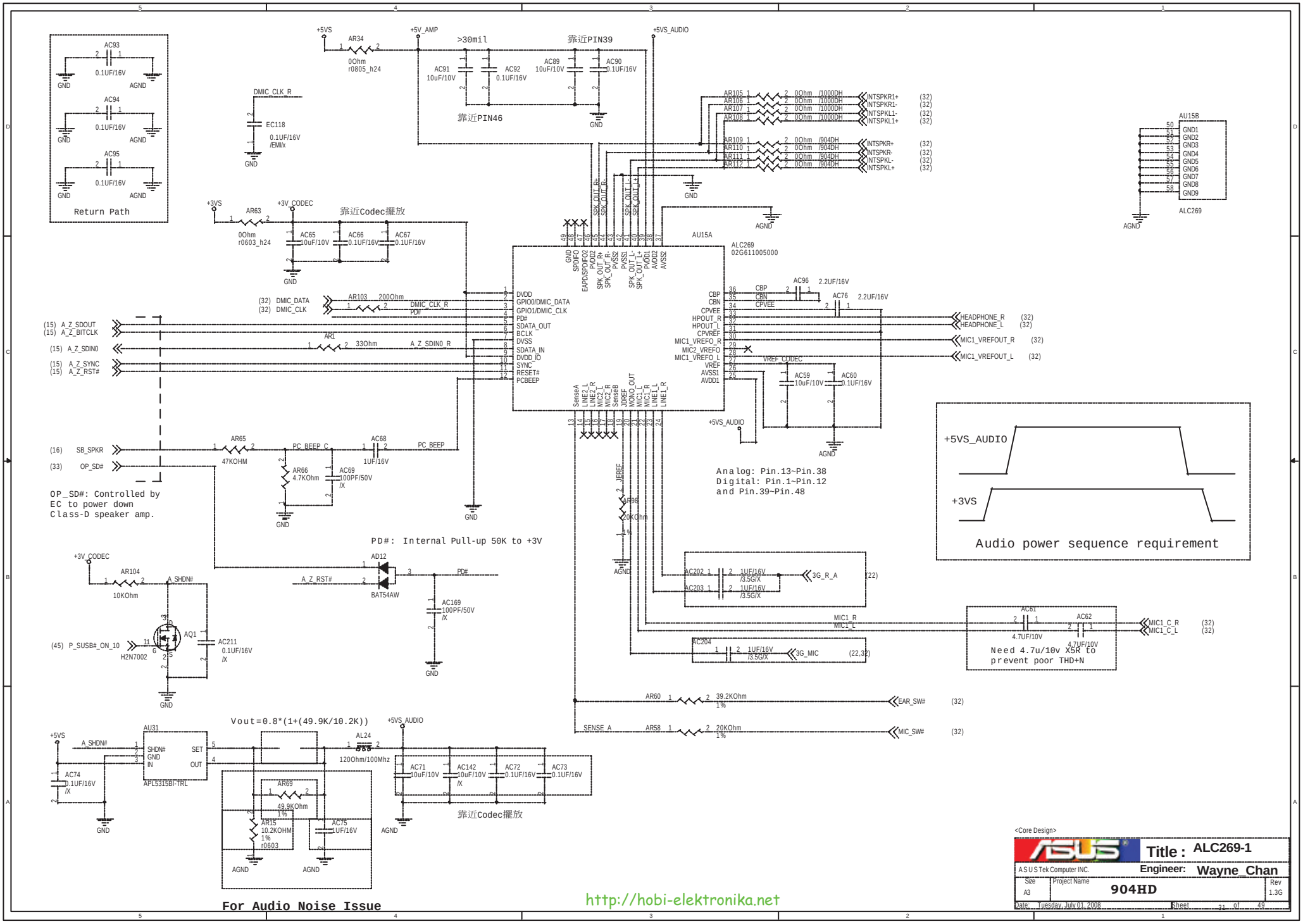
Return Path
AC93 0.1UF/16V
AC94 0.1UF/16V
AC95 0.1UF/16V
GND
AGND
+5VS
AR34 0Ohm r0805_h24
+5V_AMP
>30mil
靠近PIN39
+5VS_AUDIO
AC91 10uF/10V
AC92 0.1UF/16V
AC89 10uF/10V
AC90 0.1UF/16V
靠近PIN46
DMIC_CLK_R
EC118 0.1UF/16V /EMI/x
+3VS
AR63 0Ohm r0603_h24
+3V_CODEC
靠近Codec擺放
AC65 10uF/10V
AC66 0.1UF/16V
AC67 0.1UF/16V
AU15A
ALC269 02G611005000
AR105 0Ohm /1000DH
AR106 0Ohm /1000DH
AR107 0Ohm /1000DH
AR108 0Ohm /1000DH
INTSPKR1+ (32)
INTSPKR1- (32)
INTSPKL1- (32)
INTSPKL1+ (32)
AR109 0Ohm /904DH
AR110 0Ohm /904DH
AR111 0Ohm /904DH
AR112 0Ohm /904DH
INTSPKR+ (32)
INTSPKR- (32)
INTSPKL- (32)
INTSPKL+ (32)
AU15B
GND1
GND2
GND3
GND4
GND5
GND6
GND7
GND8
GND9
ALC269
(32) DMIC_DATA
(32) DMIC_CLK
AR103 200Ohm
DMIC_CLK_R
PD#
(15) A_Z_SDOUT
(15) A_Z_BITCLK
(15) A_Z_SDIN0
(15) A_Z_SYNC
(15) A_Z_RST#
AR1 33Ohm
A_Z_SDIN0_R
DVDD
GPIO0/DMIC_DATA
GPIO1/DMIC_CLK
PD#
SDATA_OUT
BCLK
DVSS
SDATA_IN
DVDD_IO
SYNC
RESET#
PCBEEP
CBP
CBN
CPVEE
HPOUT_R
HPOUT_L
CPVREF
MIC1_VREFO_R
MIC2_VREFO
MIC1_VREFO_L
VREF
AVSS1
AVDD1
AC96 2.2UF/16V
AC76 2.2UF/16V
HEADPHONE_R (32)
HEADPHONE_L (32)
MIC1_VREFOUT_R (32)
MIC1_VREFOUT_L (32)
VREF_CODEC
AC59 10uF/10V
AC60 0.1UF/16V
(16) SB_SPKR
(33) OP_SD#
AR65 47KOHM
PC_BEEP_C
AC68 1UF/16V
PC_BEEP
AR66 4.7KOhm
AC69 100PF/50V /X
OP_SD#: Controlled by EC to power down Class-D speaker amp.
PD#: Internal Pull-up 50K to +3V
Analog: Pin.13~Pin.38
Digital: Pin.1~Pin.12
and Pin.39~Pin.48
JDREF
AR98 20KOhm 1%
+5VS_AUDIO
+3VS
Audio power sequence requirement
+3V_CODEC
AR104 10KOhm
A_SHDN#
AD12
A_Z_RST#
BAT54AW
PD#
AC169 100PF/50V /X
(45) P_SUSB#_ON_10
H2N7002
AQ1
AC211 0.1UF/16V /X
AC202 1UF/16V /3.5G/X
AC203 1UF/16V /3.5G/X
3G_R_A (22)
MIC1_R
MIC1_L
AC61 4.7UF/10V
AC62 4.7UF/10V
MIC1_C_R (32)
MIC1_C_L (32)
Need 4.7u/10v X5R to prevent poor THD+N
AC204 1UF/16V /3.5G/X
3G_MIC (22,32)
AR60 39.2KOhm 1%
EAR_SW# (32)
SENSE_A
AR58 20KOhm 1%
MIC_SW# (32)
Vout=0.8*(1+(49.9K/10.2K))
AU31
SHDN#
GND
IN
SET
OUT
APL5315BI-TRL
AC74 0.1UF/16V /X
AL24 120Ohm/100Mhz
AC71 10uF/10V
AC142 10uF/10V /X
AC72 0.1UF/16V
AC73 0.1UF/16V
AR69 49.9KOhm 1%
AR15 10.2KOHM 1% r0603
AC75 1UF/16V
For Audio Noise Issue
http://hobi-elektronika.net
<Core Design>
Title : ALC269-1
A S U S Tek Computer INC.
Engineer: Wayne_Chan
Size A3
Project Name 904HD
Rev 1.3G
Date: Tuesday, July 01, 2008
Sheet 21 of 49

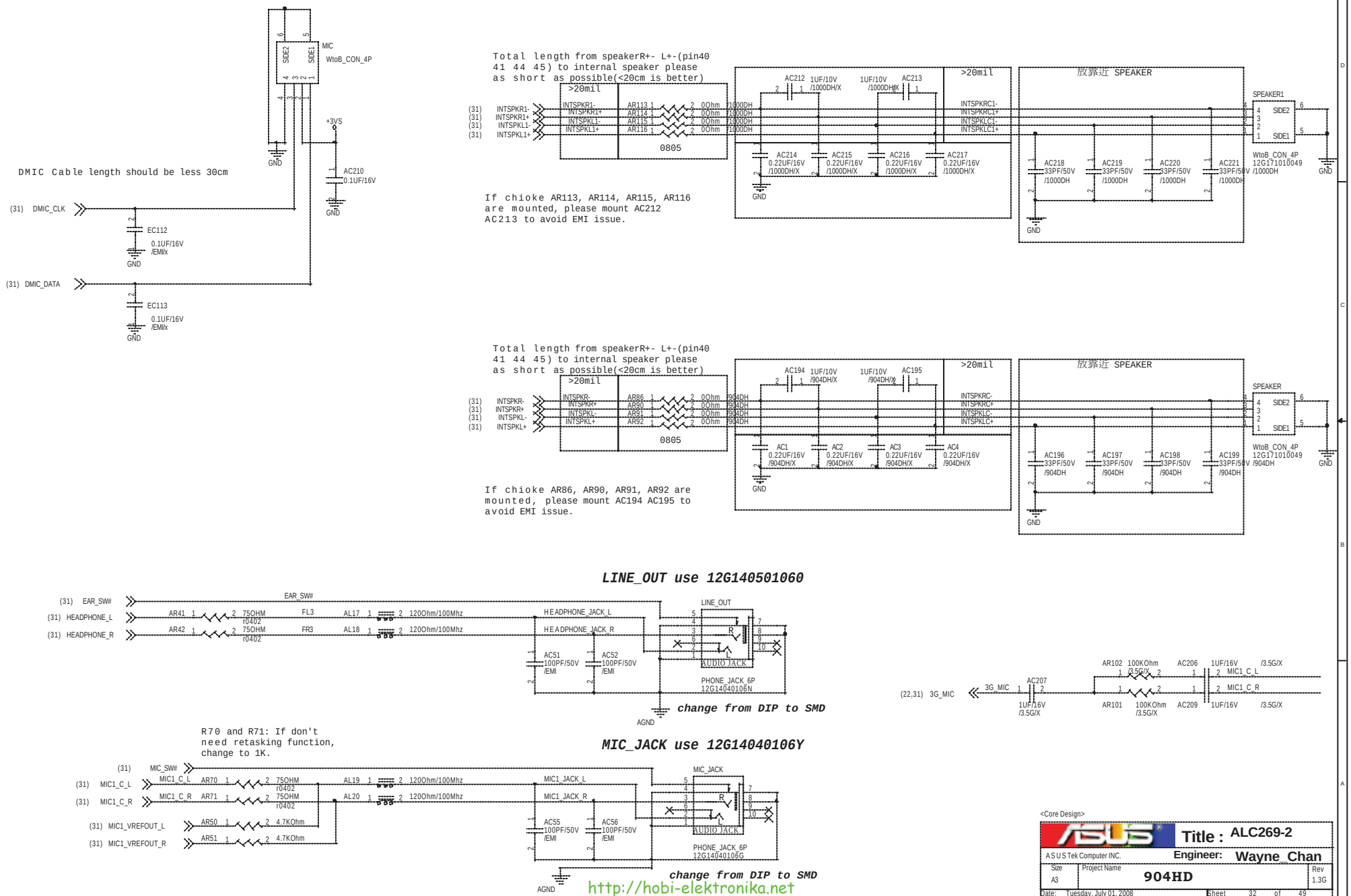
MIC
WtoB_CON_4P
SIDE2
SIDE1
+3VS
AC210
0.1UF/16V
GND
DMIC Cable length should be less 30cm
(31) DMIC_CLK
EC112
0.1UF/16V
/EMI/x
(31) DMIC_DATA
EC113
Total length from speakerR+- L+-(pin40 41 44 45) to internal speaker please as short as possible(<20cm is better)
>20mil
(31) INTSPKR1-
(31) INTSPKR1+
(31) INTSPKL1-
(31) INTSPKL1+
AR113
AR114
AR115
AR116
0ohm
1000DH
0805
AC212
AC213
1UF/10V
/1000DH/X
AC214
AC215
AC216
AC217
0.22UF/16V
/1000DH/X
INTSPKRC1-
INTSPKRC1+
INTSPKLC1-
INTSPKLC1+
放靠近 SPEAKER
SPEAKER1
AC218
AC219
AC220
AC221
33PF/50V
/1000DH
WtoB_CON_4P
12G171010049
If chioke AR113, AR114, AR115, AR116 are mounted, please mount AC212 AC213 to avoid EMI issue.
Total length from speakerR+- L+-(pin40 41 44 45) to internal speaker please as short as possible(<20cm is better)
(31) INTSPKR-
(31) INTSPKR+
(31) INTSPKL-
(31) INTSPKL+
AR86
AR90
AR91
AR92
904DH
AC194
AC195
1UF/10V
/904DH/X
AC1
AC2
AC3
AC4
INTSPKRC-
INTSPKRC+
INTSPKLC-
INTSPKLC+
SPEAKER
AC196
AC197
AC198
AC199
/904DH
If chioke AR86, AR90, AR91, AR92 are mounted, please mount AC194 AC195 to avoid EMI issue.
LINE_OUT use 12G140501060
(31) EAR_SW#
(31) HEADPHONE_L
(31) HEADPHONE_R
AR41
AR42
75OHM
r0402
FL3
FR3
AL17
AL18
120Ohm/100Mhz
HEADPHONE_JACK_L
HEADPHONE_JACK_R
LINE_OUT
AC51
AC52
100PF/50V
/EMI
AUDIO JACK
PHONE_JACK_6P
12G14040106N
AGND
change from DIP to SMD
(22,31) 3G_MIC
AC207
1UF/16V
/3.5G/X
AR102
AR101
100KOhm
AC206
AC209
MIC1_C_L
MIC1_C_R
R70 and R71: If don't need retasking function, change to 1K.
MIC_JACK use 12G14040106Y
(31) MIC_SW#
(31) MIC1_C_L
(31) MIC1_C_R
AR70
AR71
AL19
AL20
MIC1_JACK_L
MIC1_JACK_R
MIC_JACK
AC55
AC56
PHONE_JACK_6P
12G14040106G
(31) MIC1_VREFOUT_L
(31) MIC1_VREFOUT_R
AR50
AR51
4.7KOhm
change from DIP to SMD
http://hobi-elektronika.net
<Core Design>
Title : ALC269-2
A S U S Tek Computer INC.
Engineer: Wayne_Chan
Size
A3
Project Name
904HD
Rev
1.3G
Date: Tuesday, July 01, 2008
Sheet 32 of 49

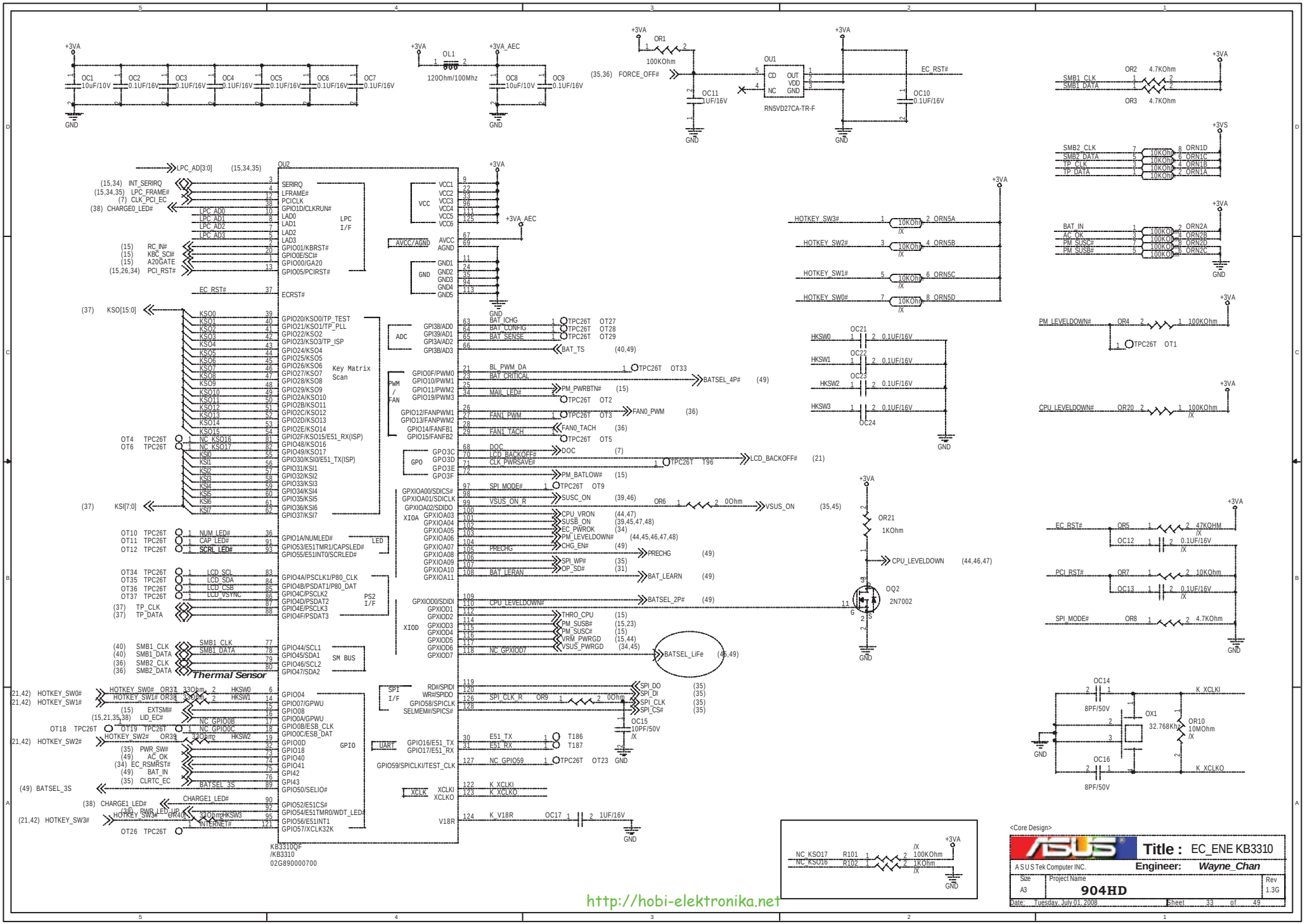

<Core Design>

ASUS	Title : EC_ENE KB3310	
A S U S Tek Computer INC.	Engineer: Wayne_Chan	
Size A3	Project Name 904HD	Rev 1.3G
Date: Tuesday, July 01, 2008	Sheet 33 of 49	

http://hobi-elektronika.net

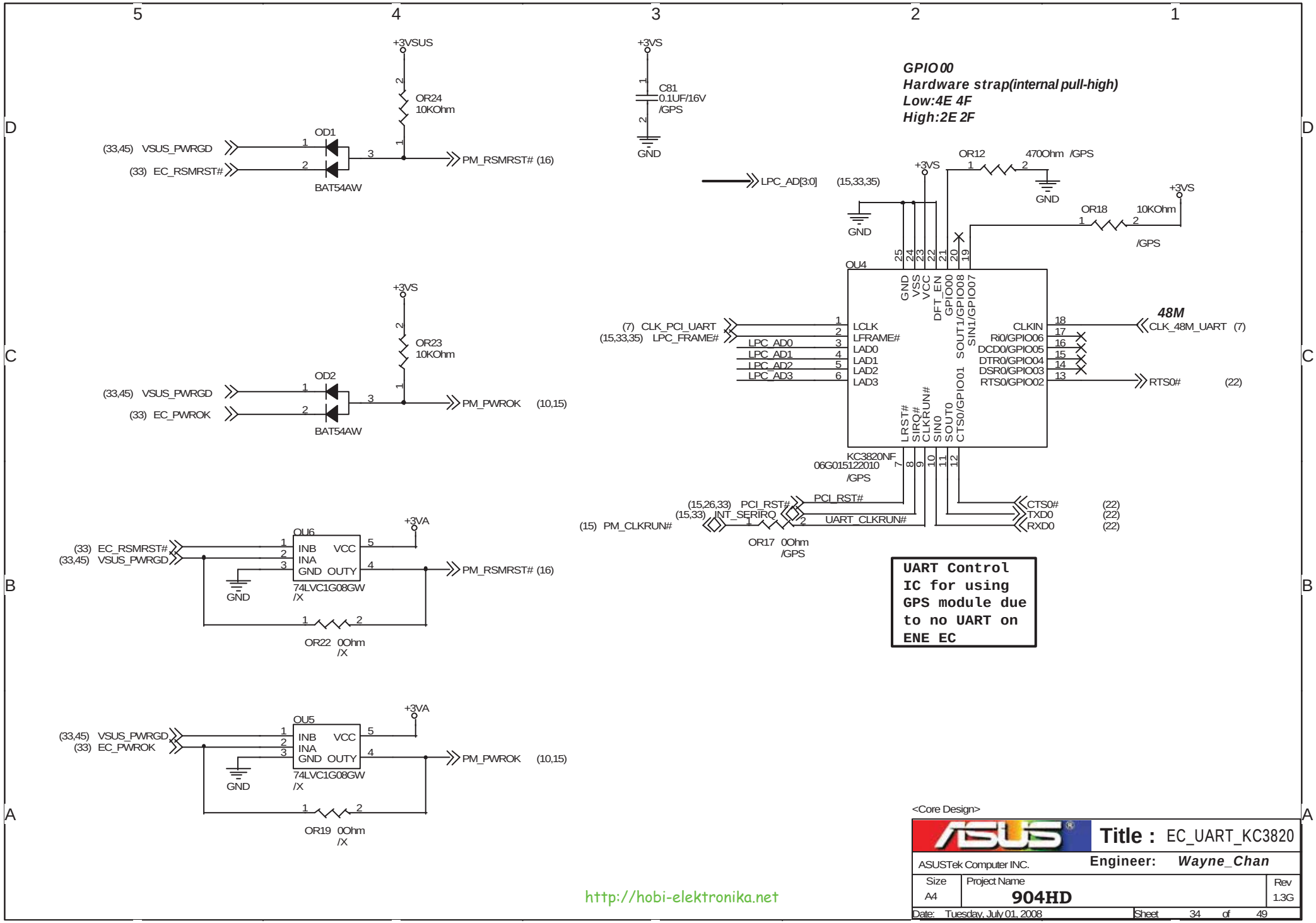
GPIO00
Hardware strap(internal pull-high)
Low:4E 4F
High:2E 2F
+3VSUS
OR24
10KOhm
OD1
(33,45) VSUS_PWRGD
(33) EC_RSMRST#
BAT54AW
PM_RSMRST# (16)
+3VS
C81
0.1UF/16V
/GPS
GND
OR23
10KOhm
OD2
(33,45) VSUS_PWRGD
(33) EC_PWROK
BAT54AW
PM_PWROK (10,15)
OU6
INB VCC
INA
GND OUTY
74LVC1G08GW
/X
+3VA
(33) EC_RSMRST#
(33,45) VSUS_PWRGD
PM_RSMRST# (16)
OR22 0Ohm
/X
OU5
(33,45) VSUS_PWRGD
(33) EC_PWROK
PM_PWROK (10,15)
OR19 0Ohm
/X
LPC_AD[3:0] (15,33,35)
OR12 470Ohm /GPS
OR18 10KOhm
/GPS
OU4
GND
VSS
VCC
DFT_EN
GPIO00
SOUT1/GPIO08
SIN1/GPIO07
LCLK
LFRAME#
LAD0
LAD1
LAD2
LAD3
CLKIN
Ri0/GPIO06
DCD0/GPIO05
DTR0/GPIO04
DSR0/GPIO03
RTS0/GPIO02
LRST#
SIRQ#
CLKRUN#
SIN0
SOUT0
CTS0/GPIO01
(7) CLK_PCI_UART
(15,33,35) LPC_FRAME#
LPC_AD0
LPC_AD1
LPC_AD2
LPC_AD3
48M
CLK_48M_UART (7)
RTS0# (22)
KC3820NF
06G015122010
/GPS
(15,26,33) PCI_RST#
(15,33) INT_SERIRQ
(15) PM_CLKRUN#
PCI_RST#
UART_CLKRUN#
OR17 0Ohm
/GPS
CTS0# (22)
TXD0 (22)
RXD0 (22)
UART Control IC for using GPS module due to no UART on ENE EC
http://hobi-elektronika.net
<Core Design>
Title : EC_UART_KC3820
ASUSTek Computer INC.
Engineer: Wayne_Chan
Size A4
Project Name 904HD
Rev 1.3G
Date: Tuesday, July 01, 2008
Sheet 34 of 49

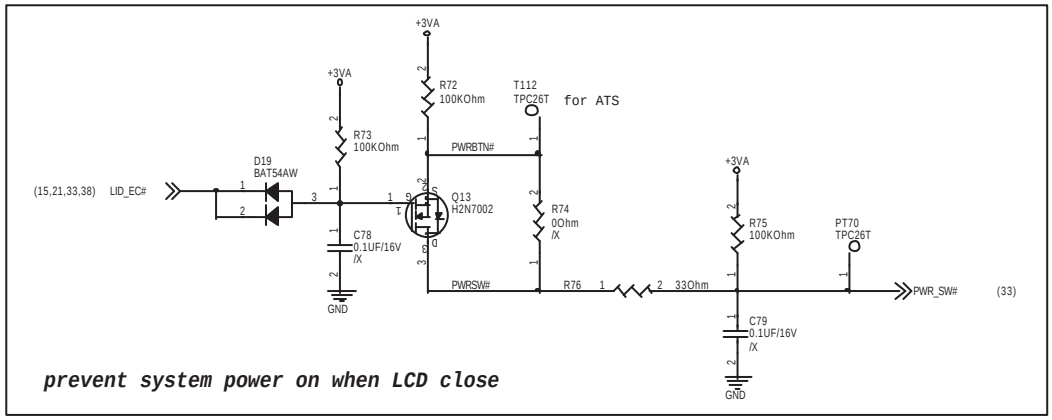

prevent system power on when LCD close

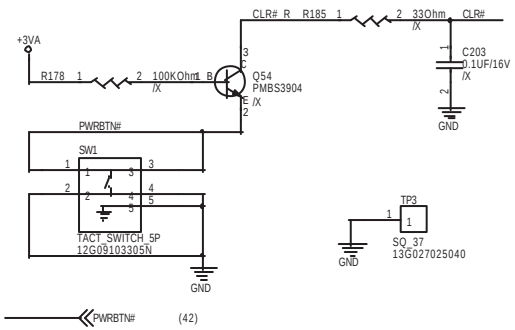

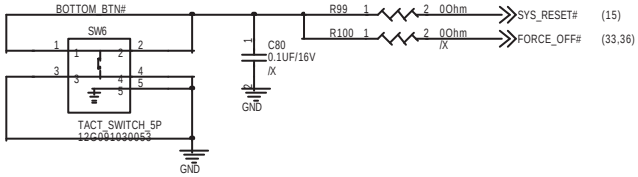

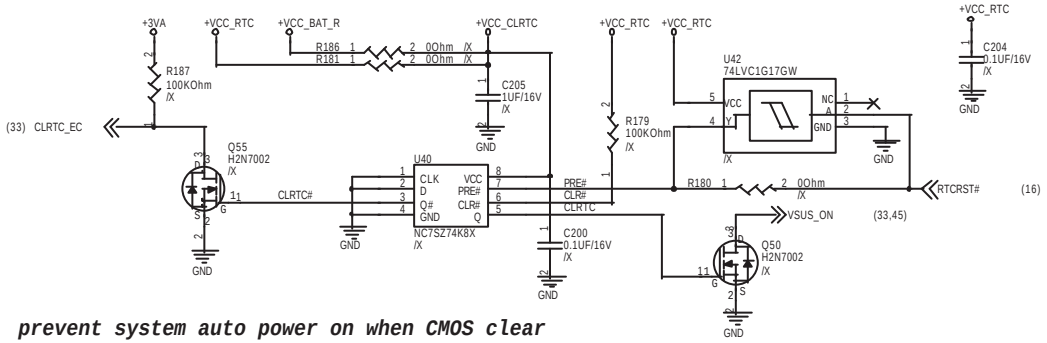

prevent system auto power on when CMOS clear

For Debug

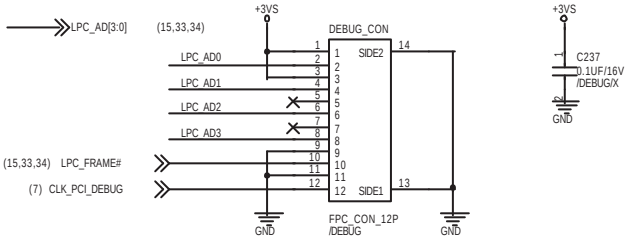

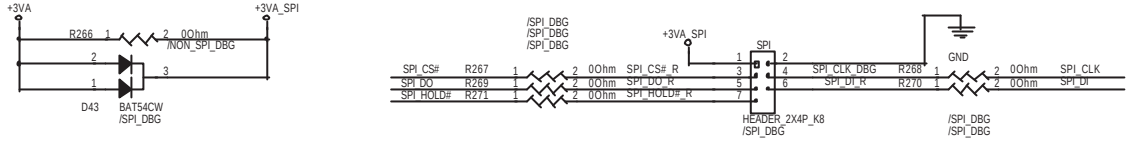

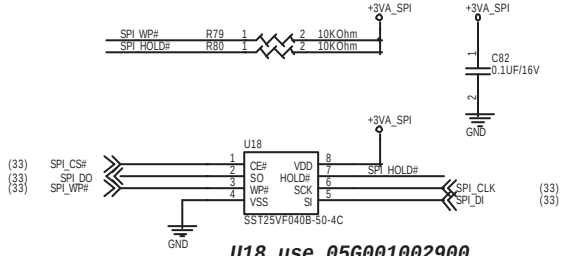

Debug Card cable use Z96 Touch Pad cable, P/N: 14G124110126, 14G124110120, 14G124110121 14G124110124, 14G124110125

U18 use 05G001002900 & 05G00100F130

http://hobi-elektronika.net

<Core Design>

ASUS	Title : Switch_SPI ROM_Debug	
A S U S Tek Computer INC.	Engineer: Wayne_Chan	
Size A3	Project Name 904HD	Rev 1.3G
Date: Tuesday, July 01, 2008	Sheet 35 of 49	

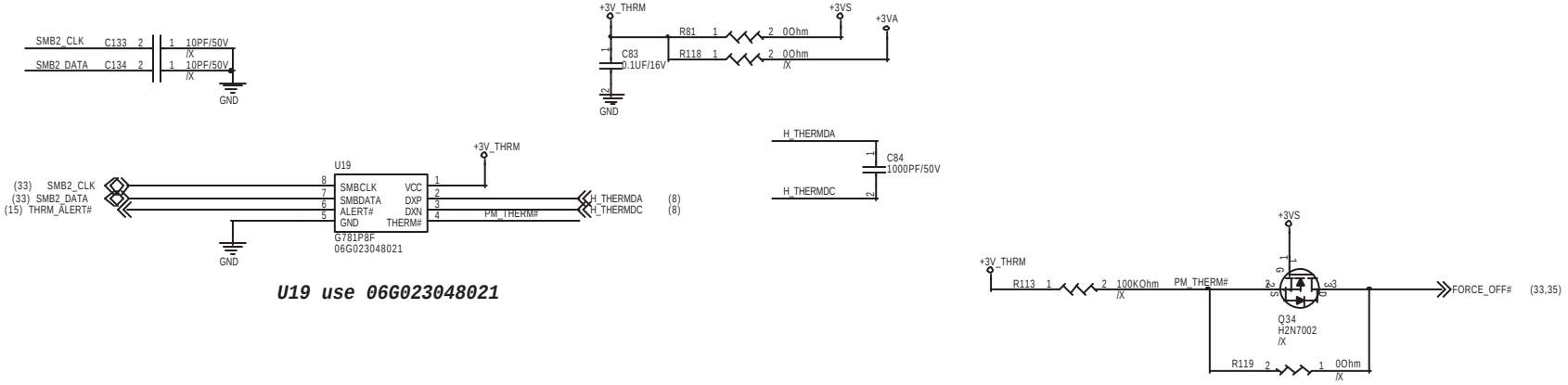

U19 use 06G023048021

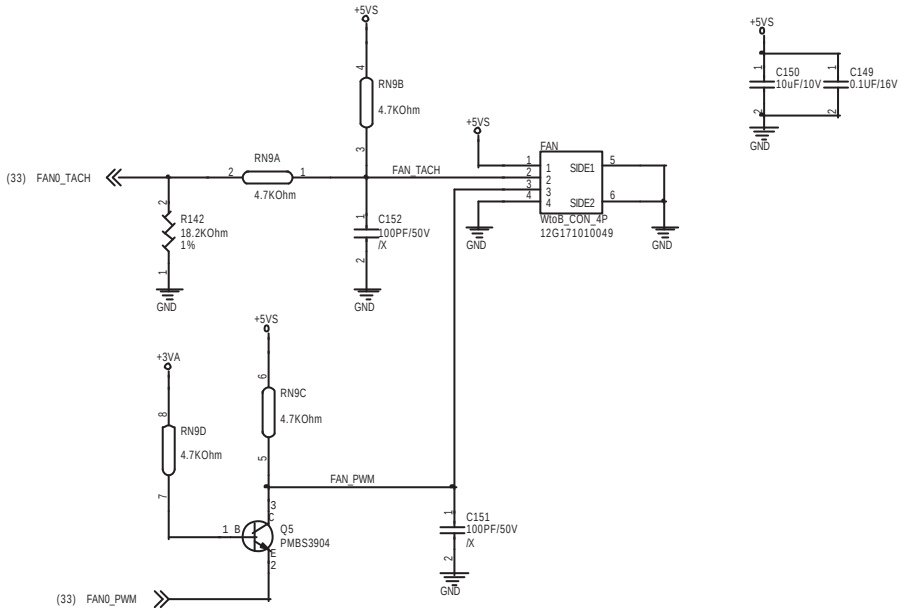

http://hobi-elektronika.net

<Core Design>

ASUS	Title : Thermal Sensor_FAN	
A S U S Tek Computer INC.	Engineer: *Wayne_Chan*	
Size A3	Project Name **904HD**	Rev 1.3G
Date: Tuesday, July 01, 2008	Sheet 36 of 49	

For Touch-Pad

P900 R1.0G

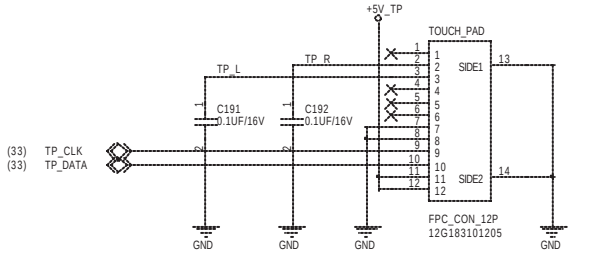

For Keyboard Connector

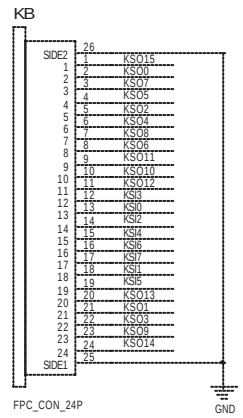

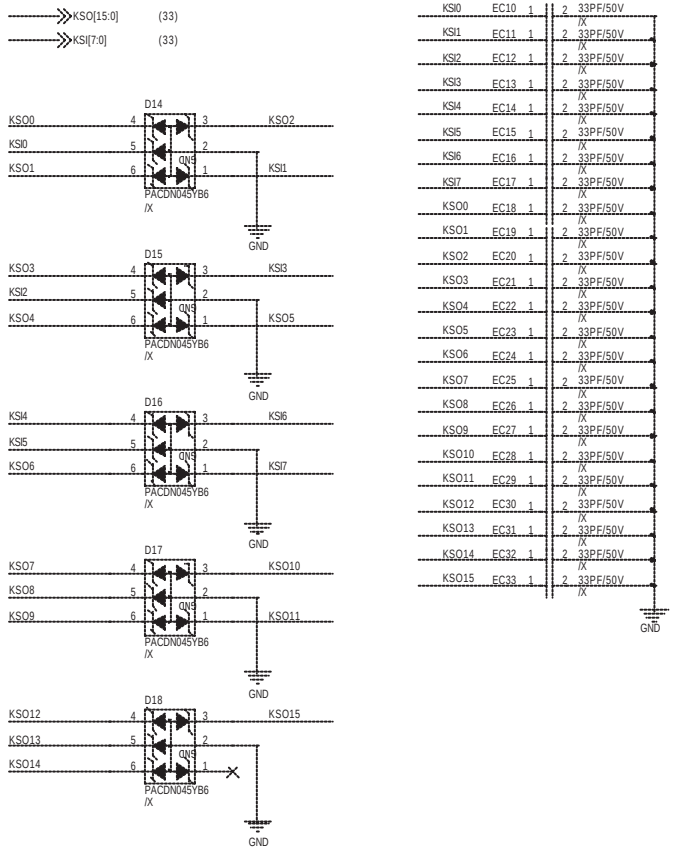

SW2, SW3 use 12G09103305N

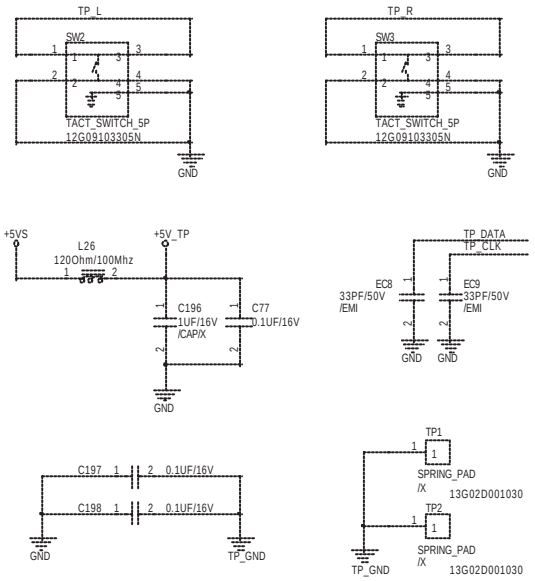

http://hobi-elektronika.net

<Core Design>

ASUS	Title : KB_Touch Pad	
A S U S Tek Computer INC.	Engineer: Wayne_Chan	
Size: A3	Project Name: 904HD	Rev: 1.3G
Date: Tuesday, July 01, 2008	Sheet 37 of 49	

for POWER LED

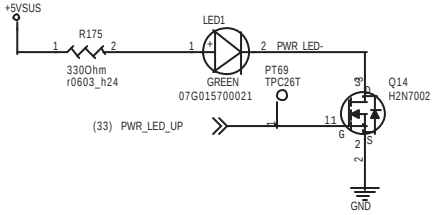

for FLASH LED

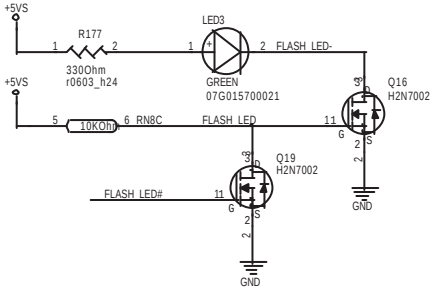

for WLAN/BlueTooth LED

R86 use 4.7K OHm 10G213472003030

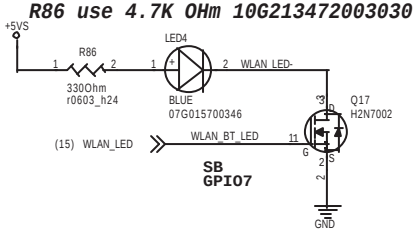

WIFI/BT LED Enable,default:1
0: WIFI and BT are both disabled
1: one of WIFI and BT is Enable or both are Enable

for CHARGE LED

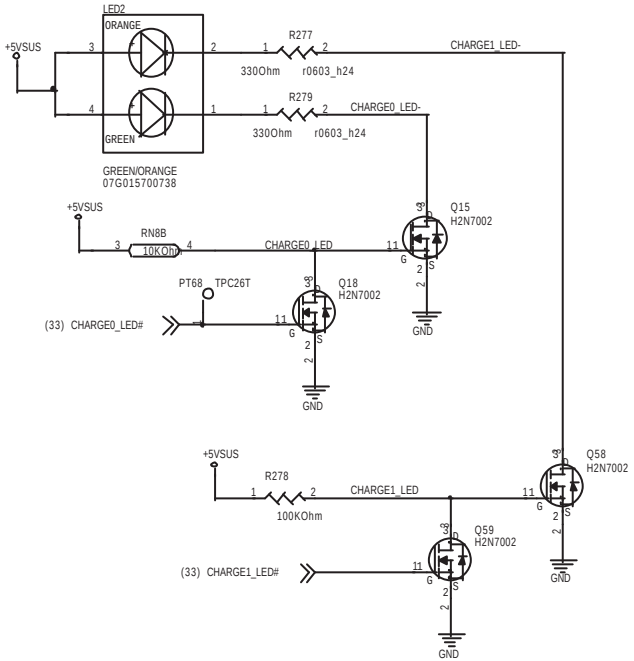

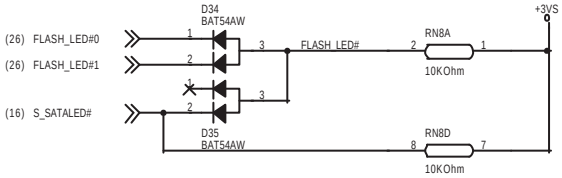

for POWER BOTTOM LED

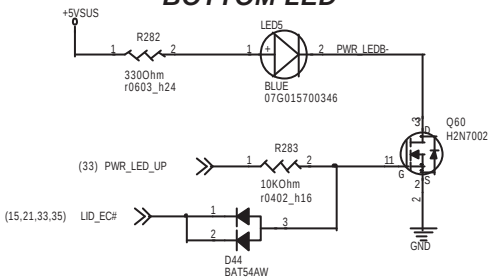

http://hobi-elektronika.net

<Core Design>

ASUS	Title : LED	
A S U S Tek Computer INC.	Engineer: Wayne_Chan	
Size A3	Project Name 904HD	Rev 1.3G
Date: Tuesday, July 01, 2008	Sheet 38 of 49	

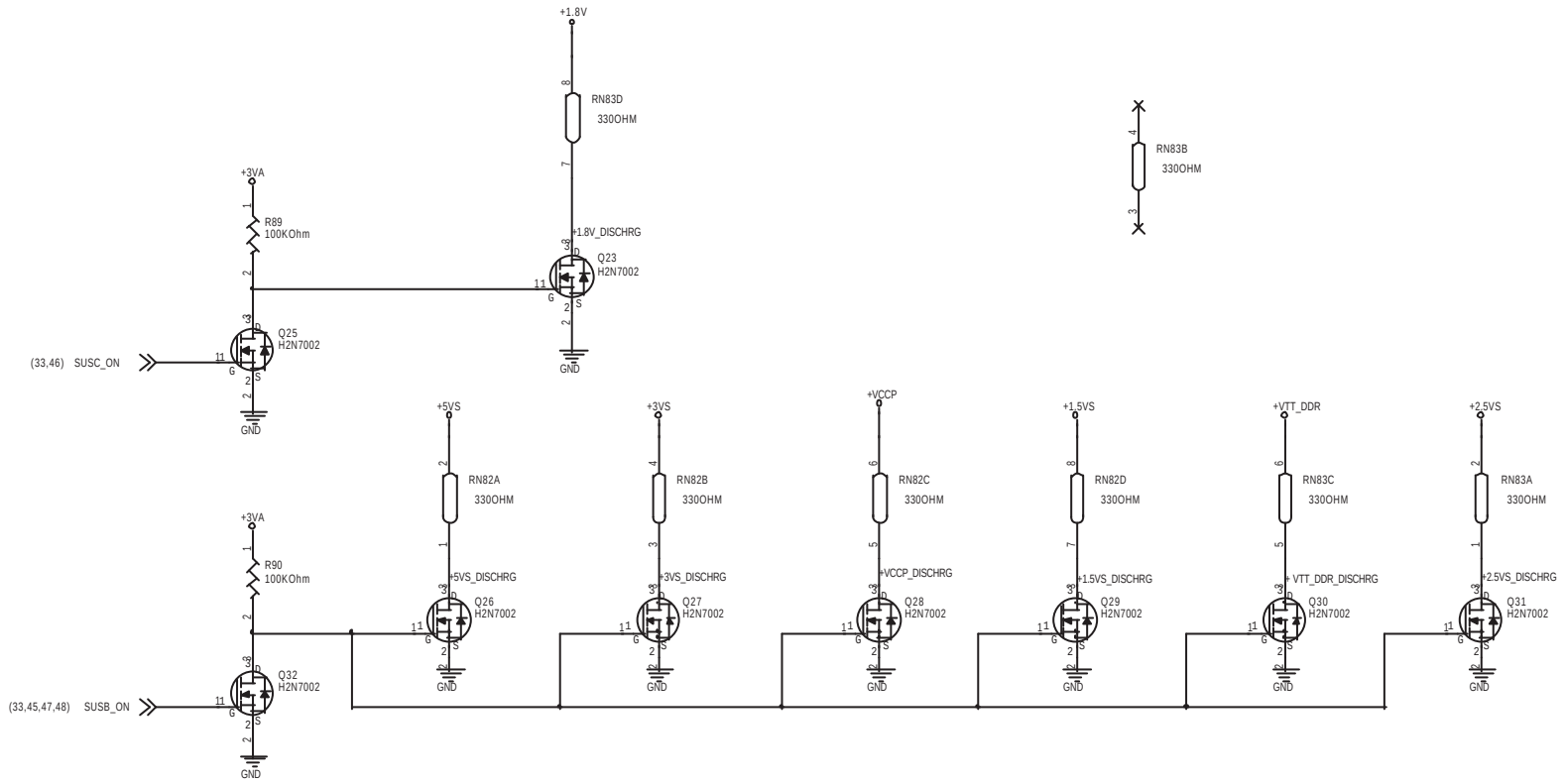

http://hobi-elektronika.net

<Core Design>

ASUS	Title : Discharge	
A S U S Tek Computer INC.	Engineer: *Wayne_Chan*	
Size: A3	Project Name: **904HD**	Rev: 1.3G
Date: Tuesday, July 01, 2008	Sheet 39 of 49	

DC IN

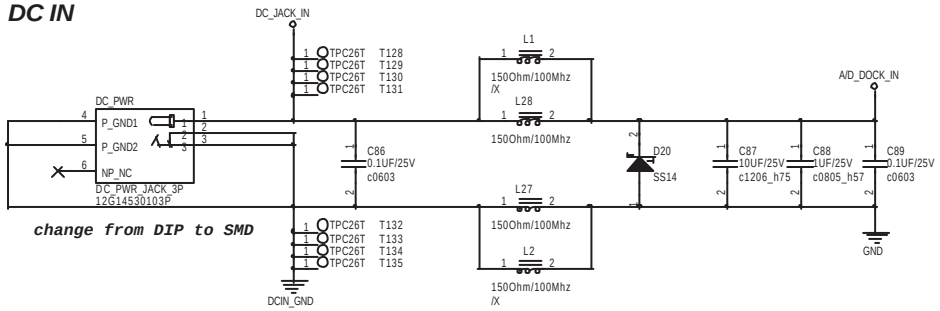

change from DIP to SMD

BAT IN

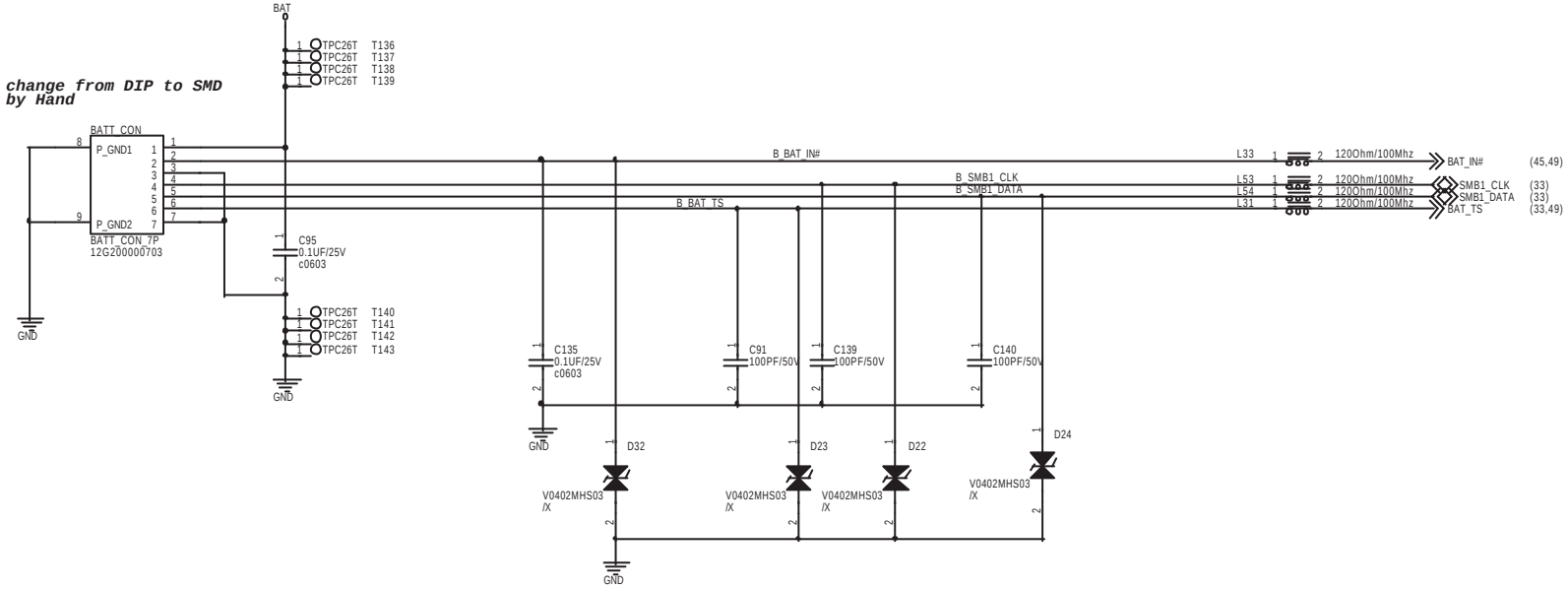

change from DIP to SMD by Hand

http://hobi-elektronika.net

<Core Design>

ASUS	Title : PWR Jack	
A S U S Tek Computer INC.	Engineer: *Wayne_Chan*	
Size A3	Project Name 904HD	Rev 1.3G
Date: Tuesday, July 01, 2008	Sheet 40 of 49	

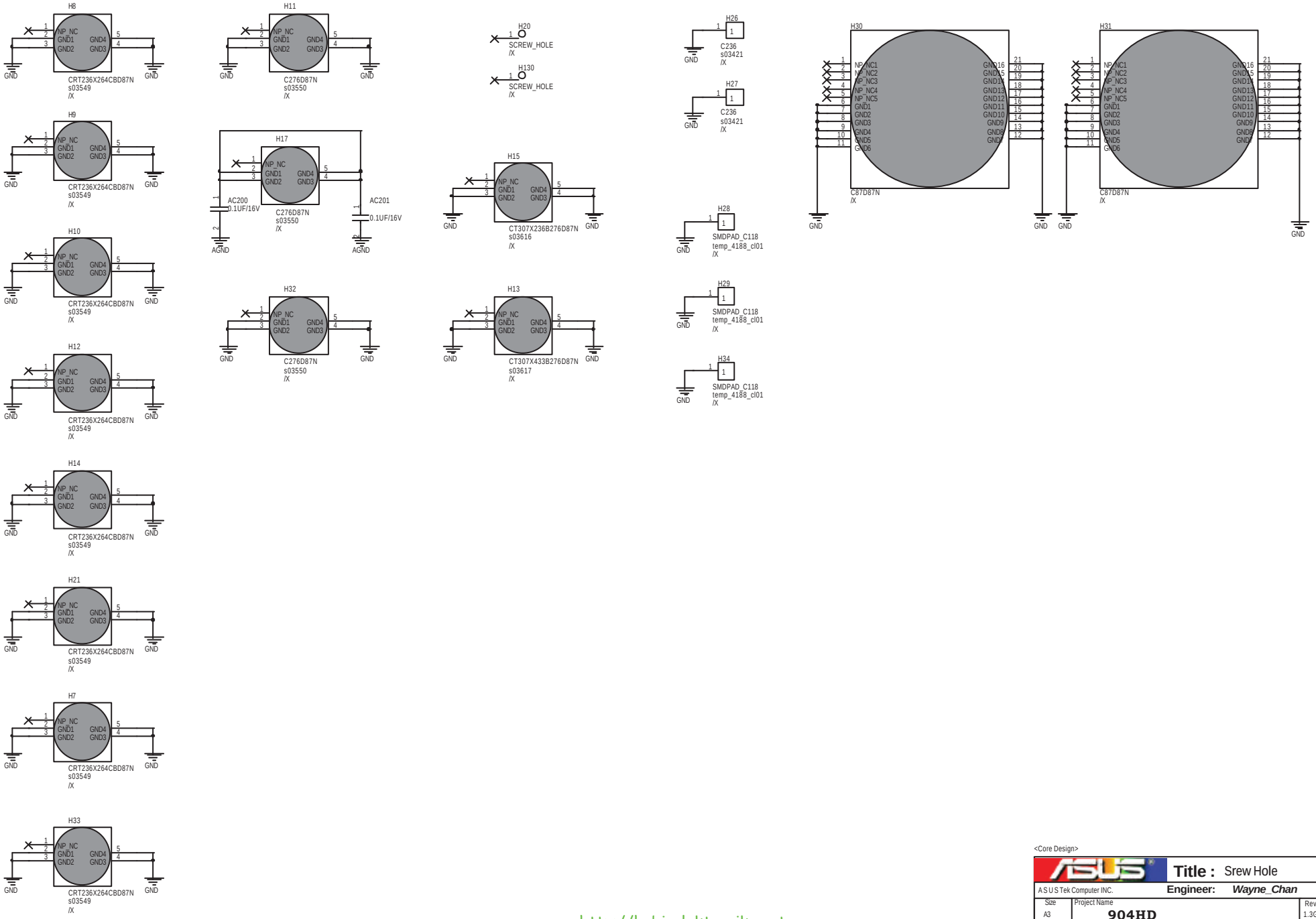

<Core Design>

ASUS	Title : Srew Hole	
A S U S Tek Computer INC.	Engineer: *Wayne_Chan*	
Size: A3	Project Name: **904HD**	Rev: 1.3G
Date: Tuesday, July 01, 2008	Sheet 41 of 49	

http://hobi-elektronika.net

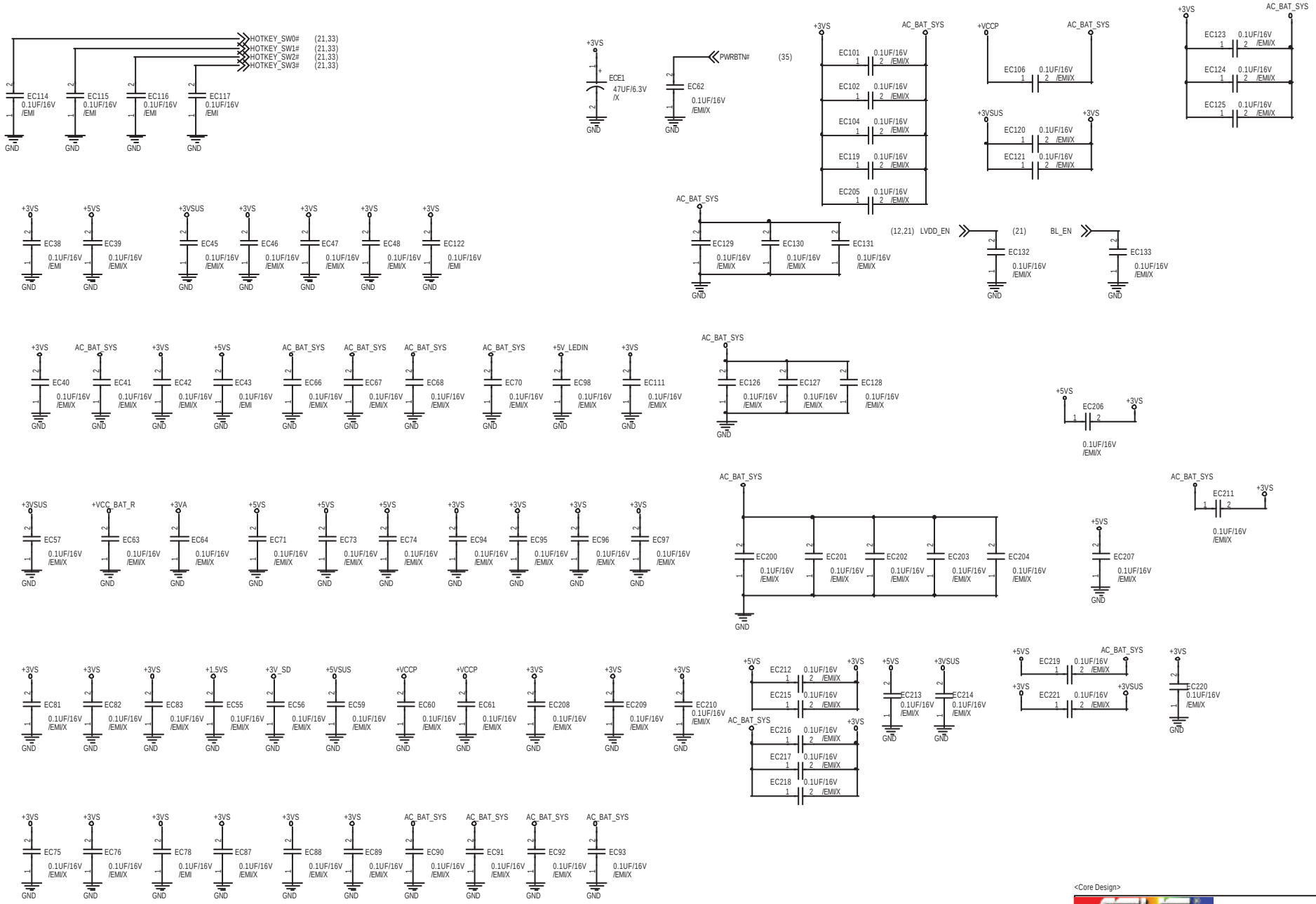

<Core Design>

ASUS	Title : EMI	
A S U S Tek Computer INC.	Engineer: *Wayne_Chan*	
Size A3	Project Name **904HD**	Rev 1.3G
Date: Tuesday, July 01, 2008	Sheet 42 of 49	

http://hobi-elektronika.net

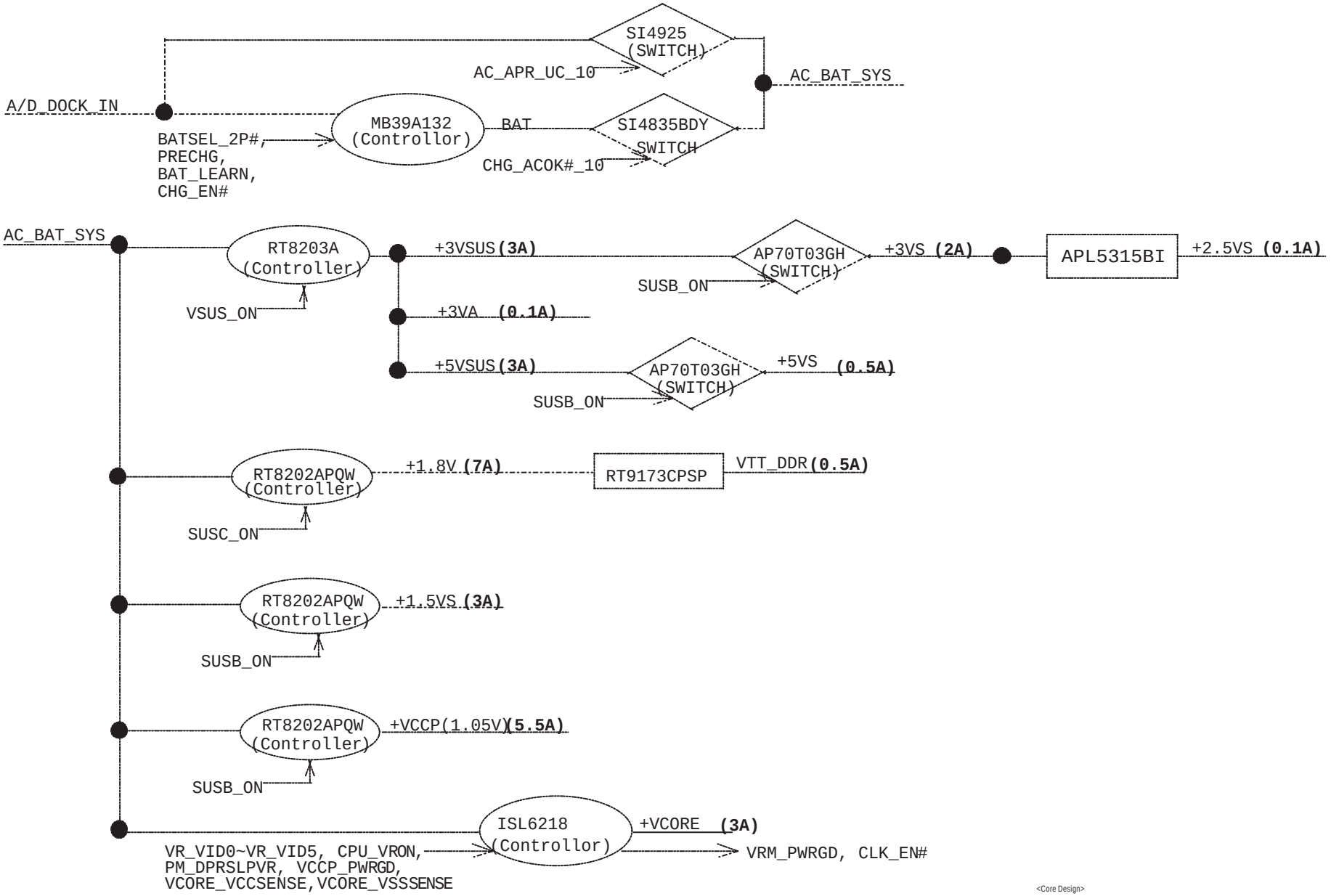

http://hobi-elektronika.net

<Core Design>

ASUS	Title : Power Flow	
A S U S Tek Computer INC.	Engineer: Joy_Zhou	
Size: A3	Project Name: 904HD	Rev: 1.3G
Date: Tuesday, July 01, 2008	Sheet 43 of 49	

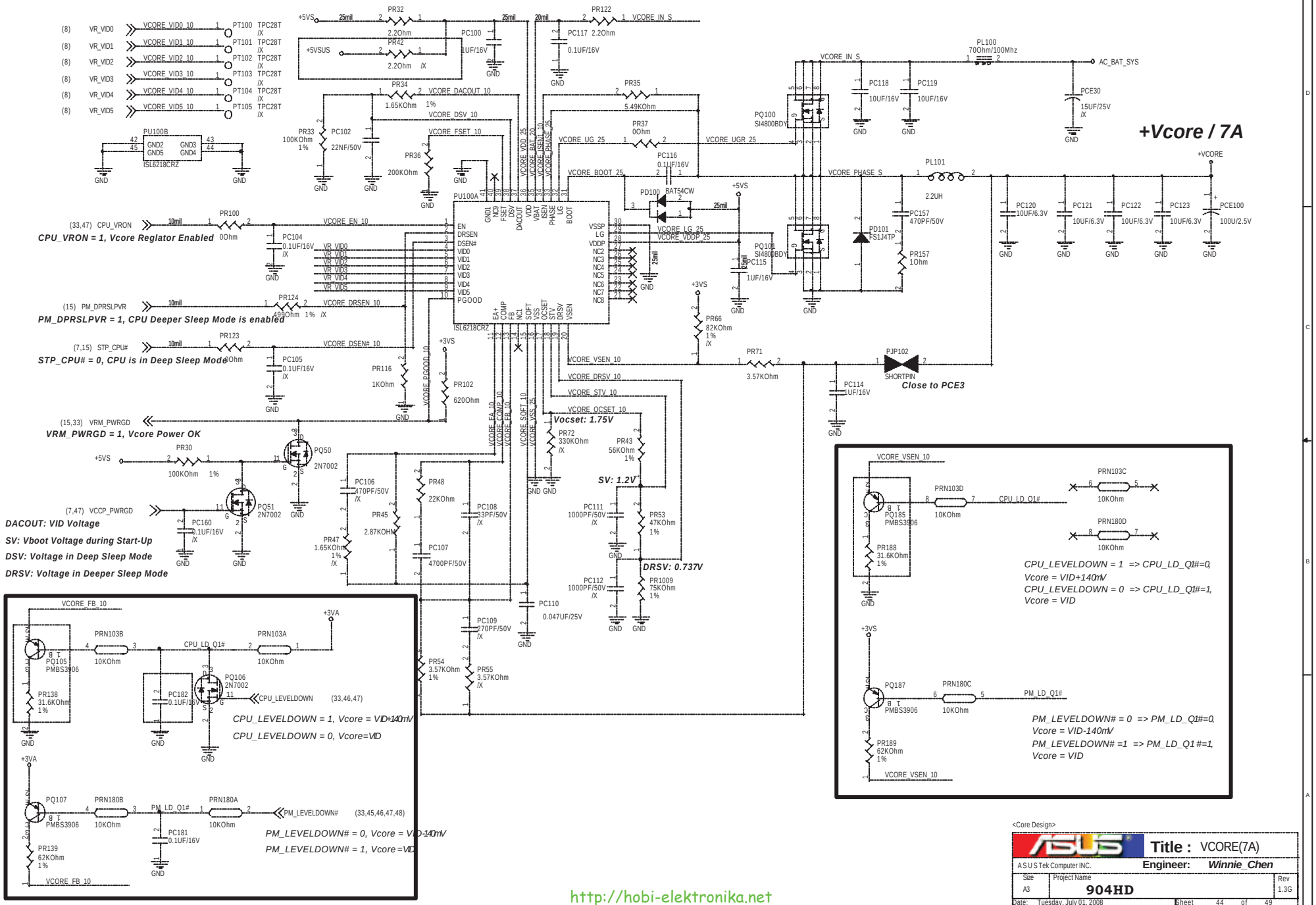

http://hobi-elektronika.net

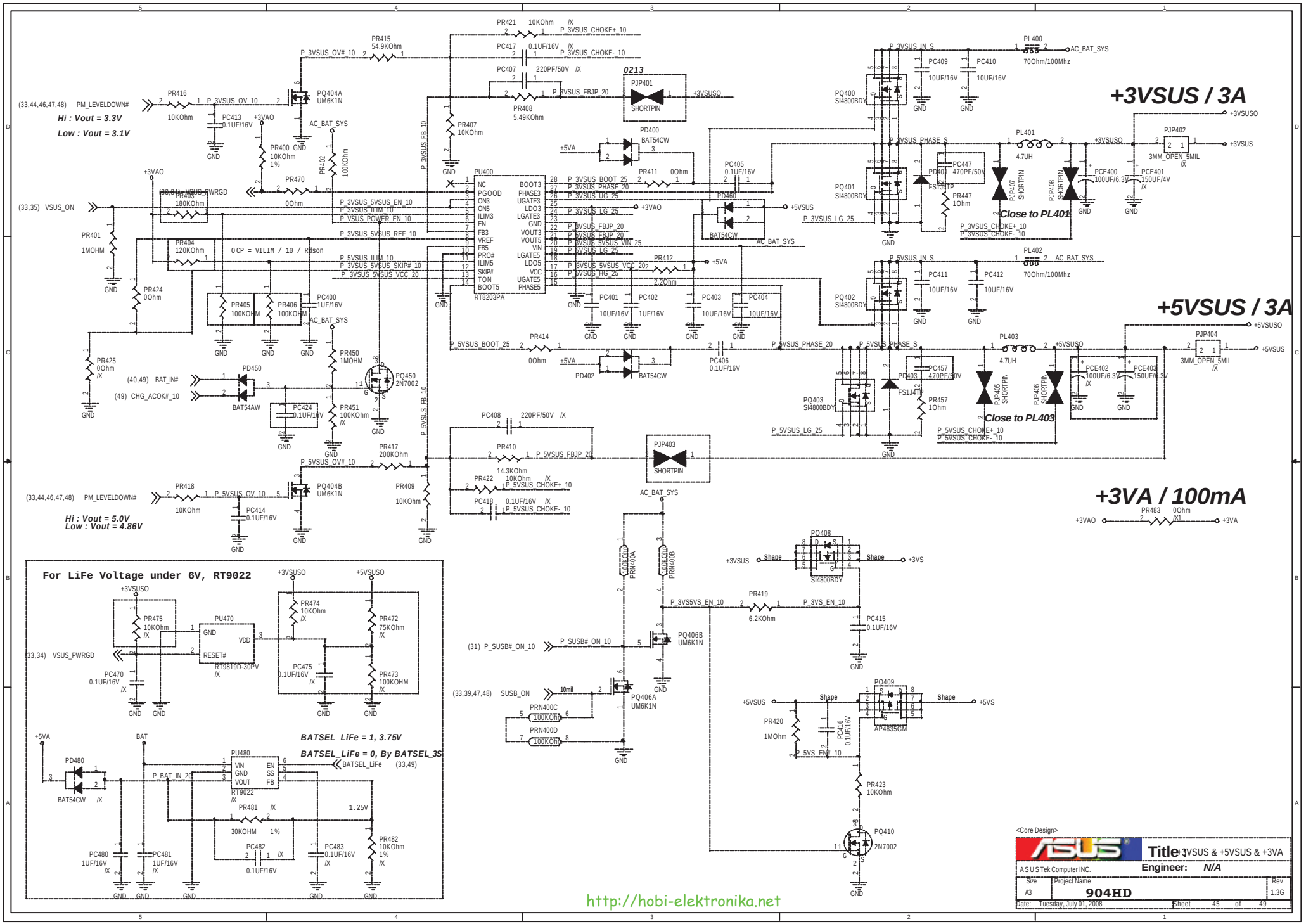
+3VSUS / 3A
+5VSUS / 3A
+3VA / 100mA
Hi : Vout = 3.3V
Low : Vout = 3.1V
Hi : Vout = 5.0V
Low : Vout = 4.86V
Close to PL401
Close to PL403
PU400
RT8203PA
PU470
RT9819D-30PV
PU480
RT9022
For LiFe Voltage under 6V, RT9022
BATSEL_LiFe = 1, 3.75V
BATSEL_LiFe = 0, By BATSEL_3S
http://hobi-elektronika.net
ASUS Tek Computer INC.
Engineer: N/A
Title: +3VSUS & +5VSUS & +3VA
904HD
Date: Tuesday, July 01, 2008
Sheet 45 of 49

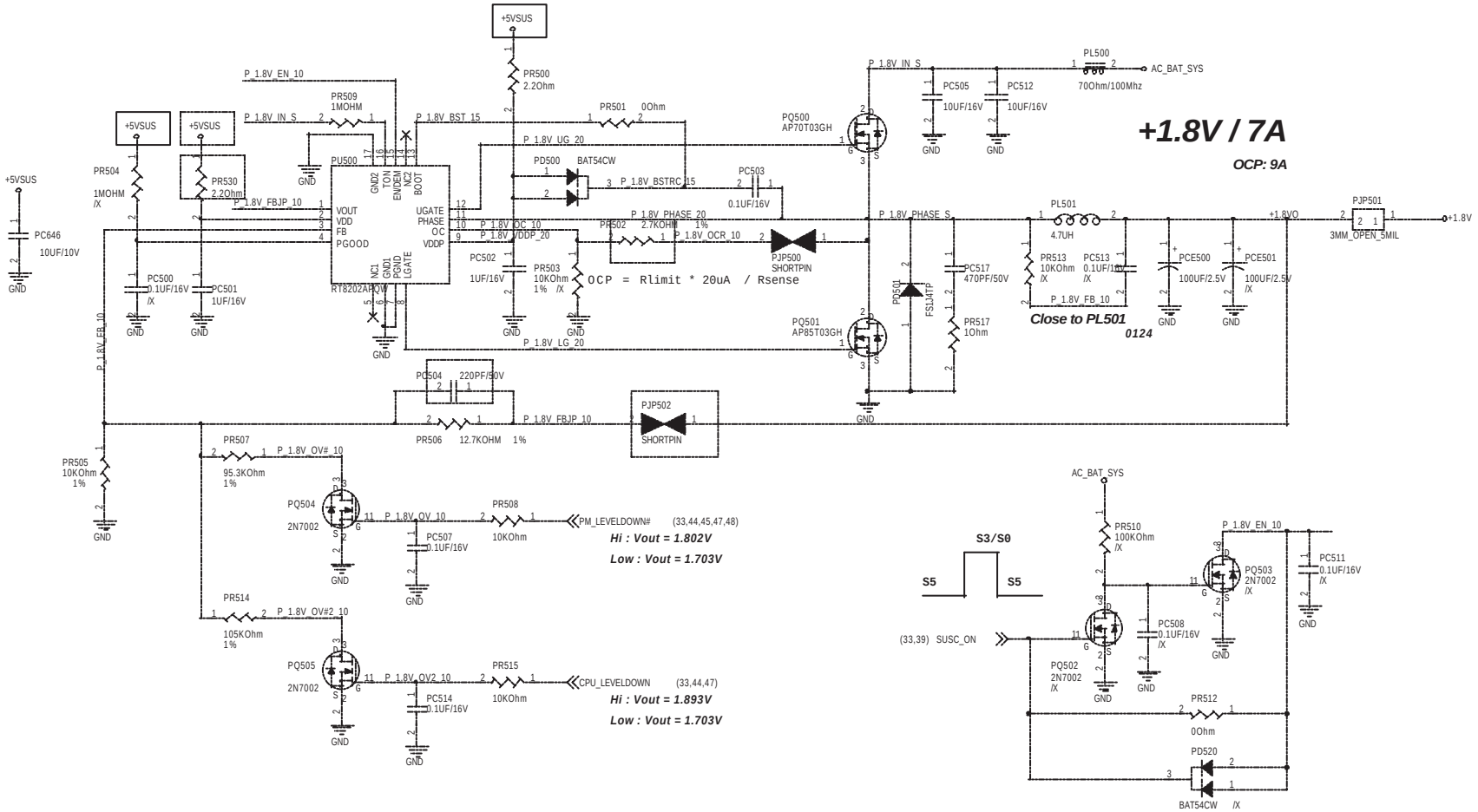

VTT_DDR / 0.5A

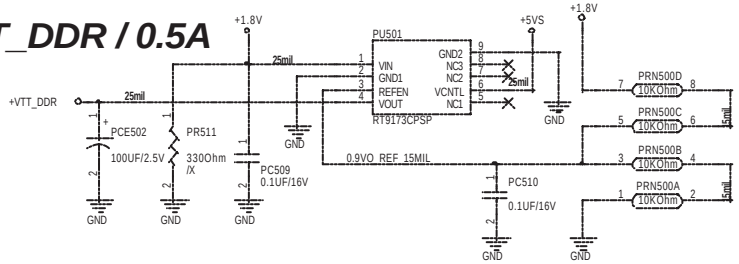

PM_LEVELDOWN#	CPU_LEVELDOWN	CPU_LEVELDOWN#	Voltage	Status	
L	L	H	1.703V	Power Saving	
H	L	H	1.802V	Normal	
H	H	L	1.893V	Performance	
H	L	H	1.802V	Performance	DEFAULT

http://hobi-elektronika.net

<Core Design>

ASUS Title : +1.8V & VTTDDR

A S U S T ek Computer INC. Engineer: Joy_Zhou

Size	Project Name	Rev
A3	904HD	1.3G

Date: Tuesday, July 01, 2008 Sheet 46 of 49

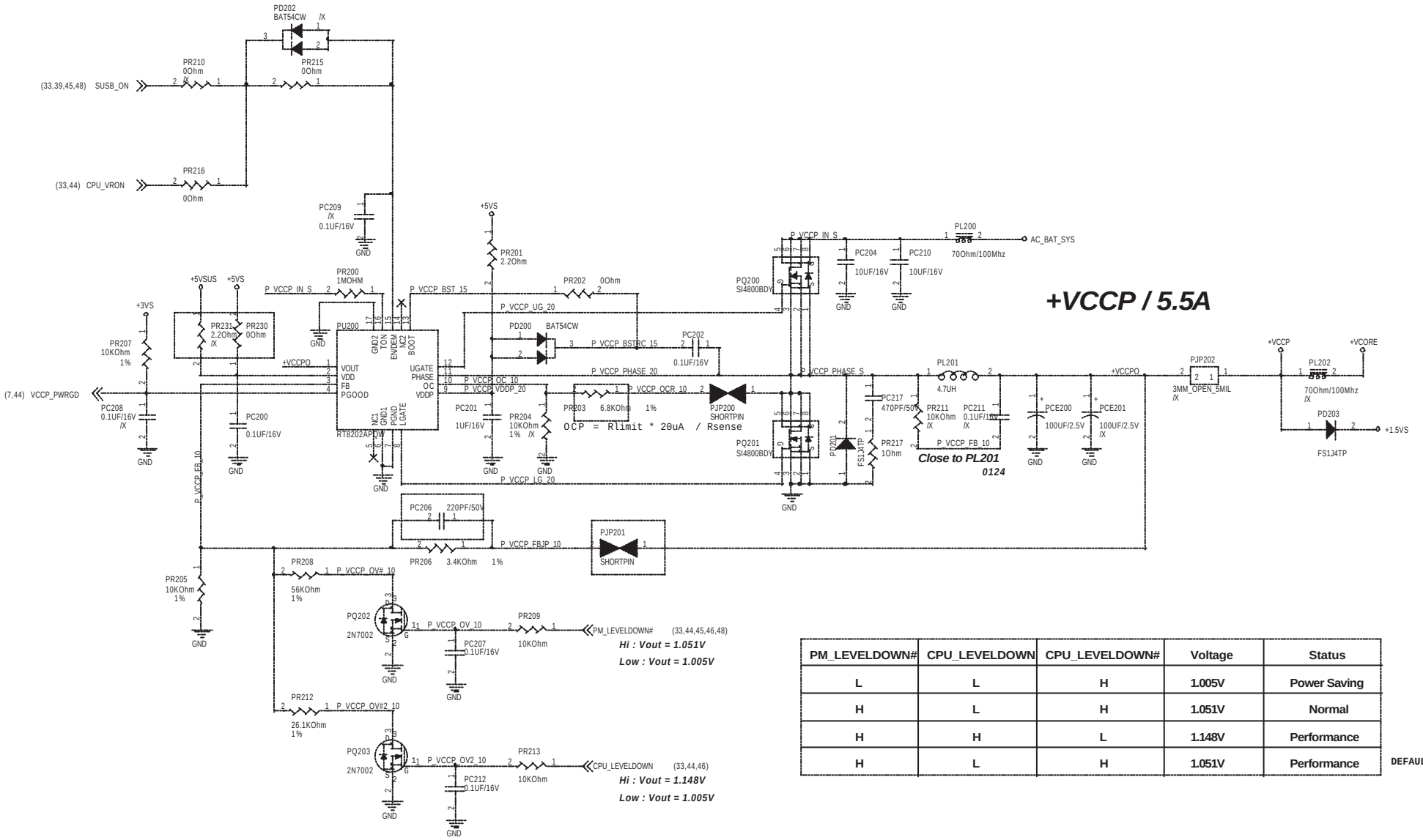

PM_LEVELDOWN#	CPU_LEVELDOWN	CPU_LEVELDOWN#	Voltage	Status	
L	L	H	1.005V	Power Saving	
H	L	H	1.051V	Normal	
H	H	L	1.148V	Performance	
H	L	H	1.051V	Performance	DEFAULT

<Core Design>

ASUS	Title : VCCP	
A S U S T ek Computer INC.	Engineer: Joy_Zhou	
Size A3	Project Name 904HD	Rev 1.3G
Date: Tuesday, July 01, 2008	Sheet 47 of 49	

http://hobi-elektronika.net

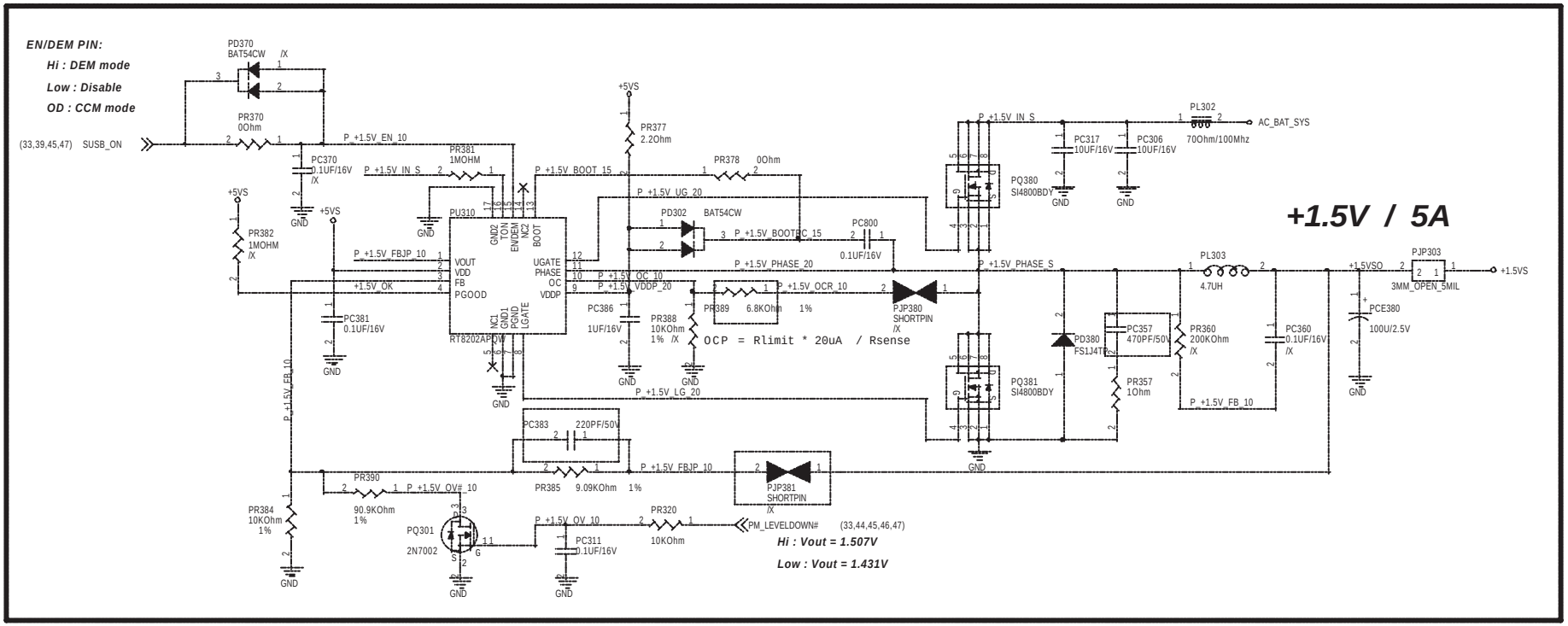

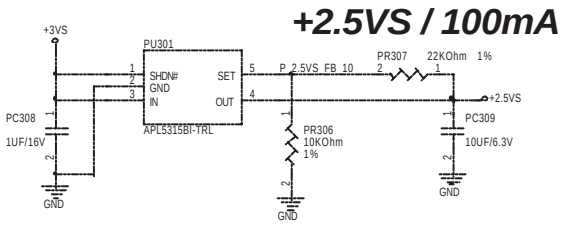

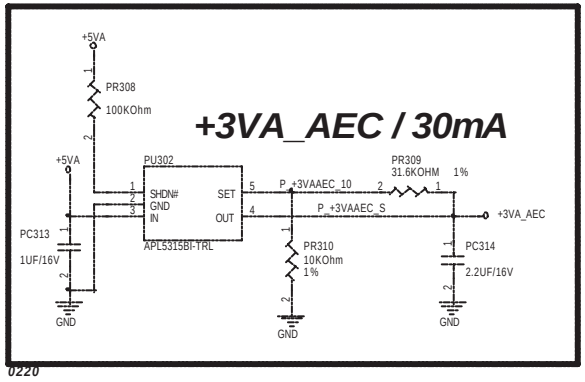

0220

http://hobi-elektronika.net

<Core Design>

ASUS	Title : +1.5VS & +2.5VS	
A S U S Tek Computer INC.	Engineer: Joy_Zhou	
Size A3	Project Name 904HD	Rev 1.3G
Date: Tuesday, July 01, 2008	Sheet 48 of 49	

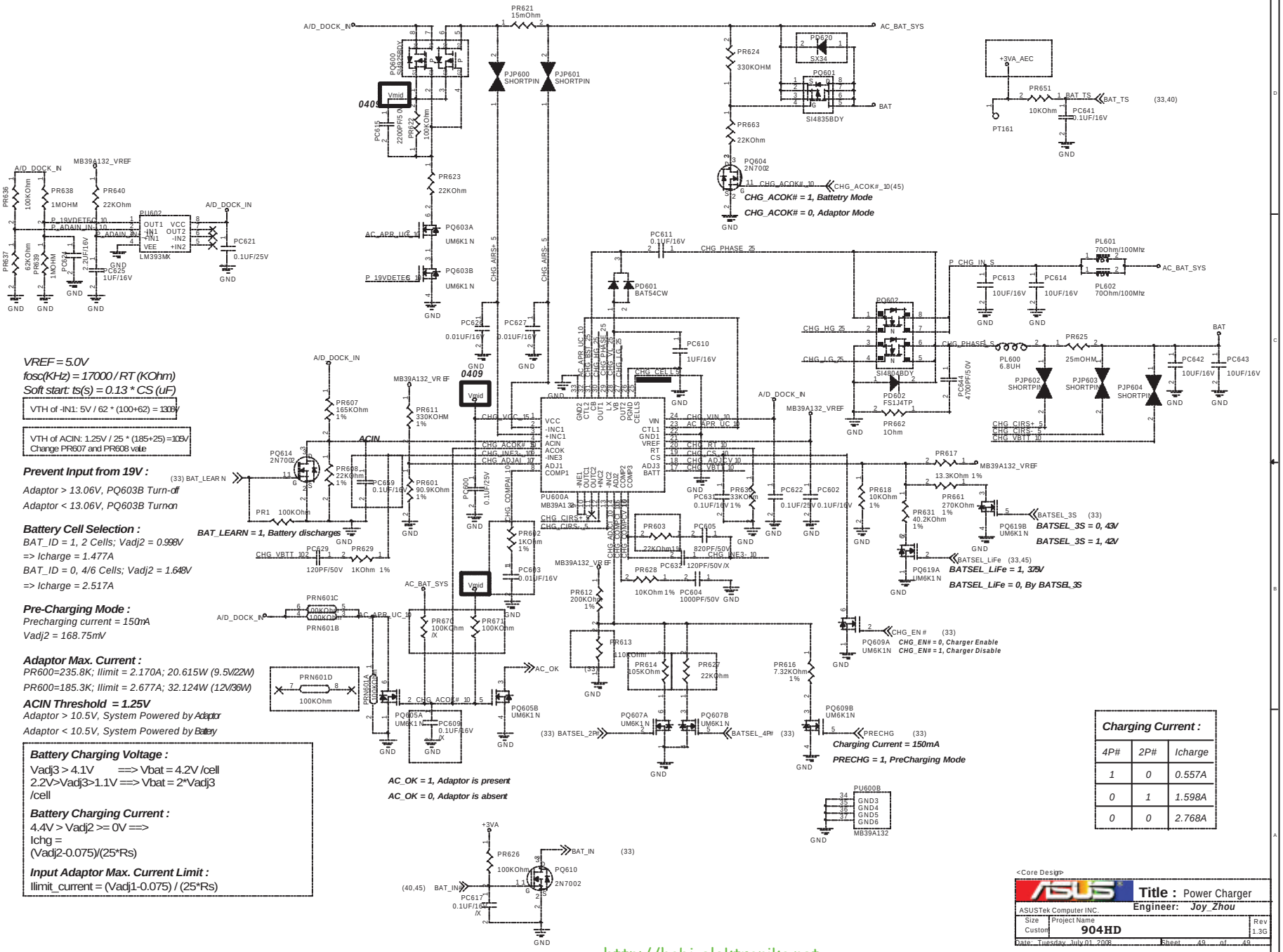
VREF = 5.0V
fosc(KHz) = 17000 / RT (KOhm)
Soft start: ts(s) = 0.13 * CS (uF)
VTH of -IN1: 5V / 62 * (100+62) = 1.06V
VTH of ACIN: 1.25V / 25 * (185+25) = 10.5V
Change PR607 and PR608 vale
Prevent Input from 19V :
Adaptor > 13.06V, PQ603B Turn-off
Adaptor < 13.06V, PQ603B Turn-on
Battery Cell Selection :
BAT_ID = 1, 2 Cells; Vadj2 = 0.998V
=> Icharge = 1.477A
BAT_ID = 0, 4/6 Cells; Vadj2 = 1.648V
=> Icharge = 2.517A
Pre-Charging Mode :
Precharging current = 150mA
Vadj2 = 168.75mV
Adaptor Max. Current :
PR600=235.8K; Ilimit = 2.170A; 20.615W (9.5V/22W)
PR600=185.3K; Ilimit = 2.677A; 32.124W (12V/36W)
ACIN Threshold = 1.25V
Adaptor > 10.5V, System Powered by Adaptor
Adaptor < 10.5V, System Powered by Battery
Battery Charging Voltage :
Vadj3 > 4.1V ==> Vbat = 4.2V /cell
2.2V>Vadj3>1.1V ==> Vbat = 2*Vadj3 /cell
Battery Charging Current :
4.4V > Vadj2 >= 0V ==>
Ichg =
(Vadj2-0.075)/(25*Rs)
Input Adaptor Max. Current Limit :
Ilimit_current = (Vadj1-0.075) / (25*Rs)
BAT_LEARN = 1, Battery discharges
AC_OK = 1, Adaptor is present
AC_OK = 0, Adaptor is absent
CHG_ACOK# = 1, Battetry Mode
CHG_ACOK# = 0, Adaptor Mode
BATSEL_3S = 0, 4.3V
BATSEL_3S = 1, 4.2V
BATSEL_LiFe = 1, 3.75V
BATSEL_LiFe = 0, By BATSEL_3S
CHG_EN# = 0, Charger Enable
CHG_EN# = 1, Charger Disable
Charging Current = 150mA
PRECHG = 1, PreCharging Mode
Charging Current :
4P# 2P# Icharge
1 0 0.557A
0 1 1.598A
0 0 2.768A
Title : Power Charger
Engineer: Joy_Zhou
ASUSTek Computer INC.
Size Custom
Project Name 904HD
Rev 1.3G
Date: Tuesday, July 01, 2008
Sheet 49 of 49
http://hobi-elektronika.net