Compal Confidential

ICL50/51, ICK70/71 Schematics Document

Intel Merom Processor with Crestline(PM965/GM965) + DDRII + ICH8M
(With ATI MXM/B)

2007-4-20

REV:1A

Security Classification	Compal Secret Data			Compal Electronics, Inc.
Issued Date	2007/04/04	Deciphered Date	2008/04/04	Title: Cover Page
THIS SHEET OF ENGINEERING DRAWING IS THE PROPRIETARY PROPERTY OF COMPAL ELECTRONICS, INC. AND CONTAINS CONFIDENTIAL AND TRADE SECRET INFORMATION. THIS SHEET MAY NOT BE TRANSFERED FROM THE CUSTODY OF THE COMPETENT DIVISION OF R&D DEPARTMENT EXCEPT AS AUTHORIZED BY COMPAL ELECTRONICS, INC. NEITHER THIS SHEET NOR THE INFORMATION IT CONTAINS MAY BE USED BY OR DISCLOSED TO ANY THIRD PARTY WITHOUT PRIOR WRITTEN CONSENT OF COMPAL ELECTRONICS, INC.				Size: B; Document Number: ICL50/ICK70 M/B LA-3551P Schematic; Rev: 1A
				Date: Monday, April 23, 2007; Sheet 1 of 48

Compal Confidential

Model Name : ICL50/51, ICK70/ICK71
File Name : LA-3551P

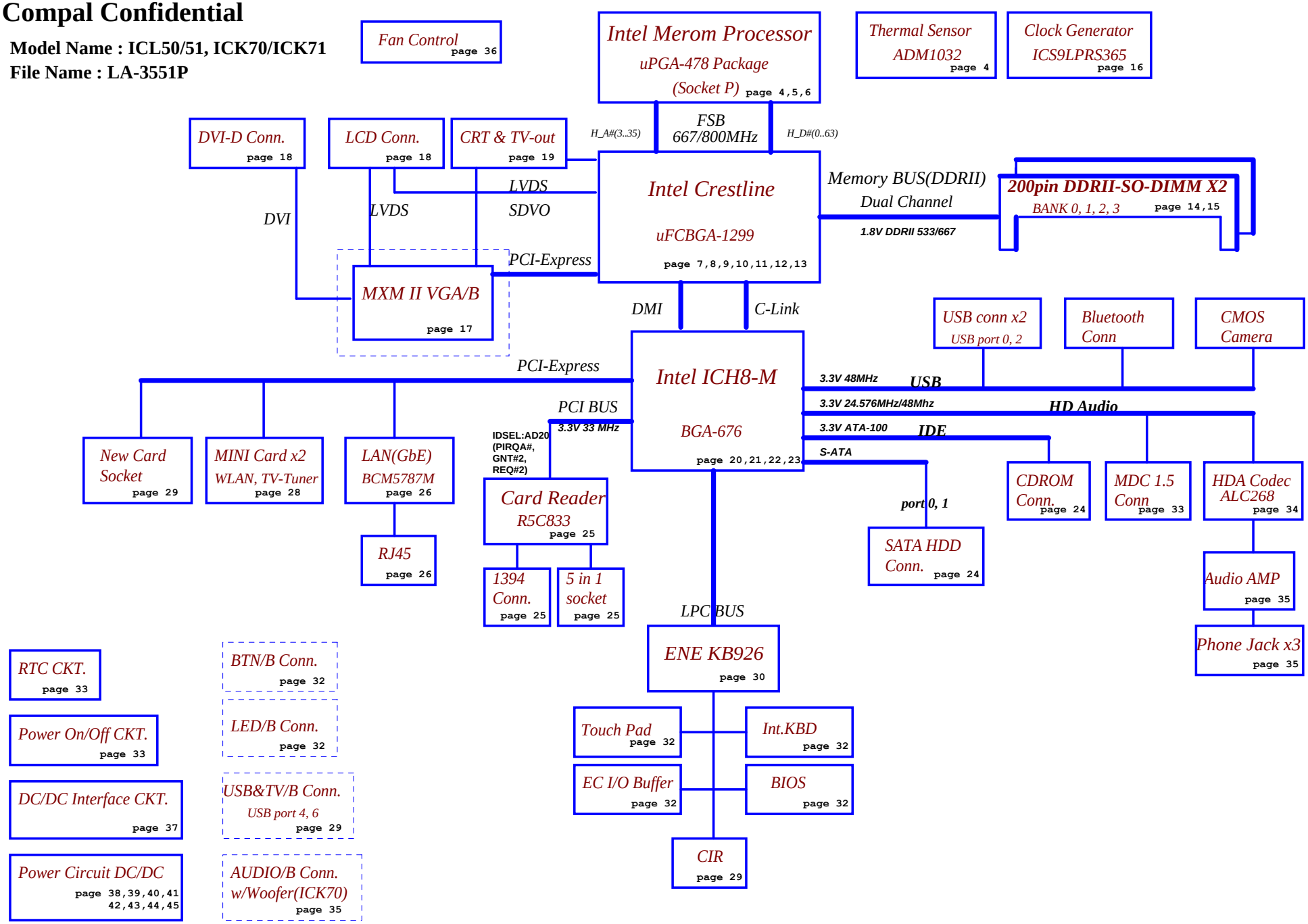

Security Classification	Compal Secret Data		Compal Electronics, Inc.
Issued Date	2006/12/25	Deciphered Date 2007/12/25	Title: Block Diagrams
THIS SHEET OF ENGINEERING DRAWING IS THE PROPRIETARY PROPERTY OF COMPAL ELECTRONICS, INC. AND CONTAINS CONFIDENTIAL AND TRADE SECRET INFORMATION. THIS SHEET MAY NOT BE TRANSFERED FROM THE CUSTODY OF THE COMPETENT DIVISION OF R&D DEPARTMENT EXCEPT AS AUTHORIZED BY COMPAL ELECTRONICS, INC. NEITHER THIS SHEET NOR THE INFORMATION IT CONTAINS MAY BE USED BY OR DISCLOSED TO ANY THIRD PARTY WITHOUT PRIOR WRITTEN CONSENT OF COMPAL ELECTRONICS, INC.			Size B / Document Number: ICL50/ICK70 M/B LA-3551P Schematic / Rev 1.0
			Date: Thursday, April 19, 2007 / Sheet 2 of 48

Voltage Rails

Power Plane	Description	S1	S3	S5
VIN	Adapter power supply (19V)	N/A	N/A	N/A
B+	AC or battery power rail for power circuit.	N/A	N/A	N/A
+CPU_CORE	Core voltage for CPU	ON	OFF	OFF
+0.9VS	0.9V switched power rail for DDR terminator	ON	OFF	OFF
+1.05VS	1.05V switched power rail	ON	OFF	OFF
+1.25VS	1.25V switched power rail	ON	OFF	OFF
+1.5VS	1.5V switched power rail	ON	OFF	OFF
+1.8V	1.8V power rail for DDR	ON	ON	OFF
+1.8VS	1.8V switched power rail	ON	OFF	OFF
+2.5VS	2.5V switched power rail	ON	OFF	OFF
+3VALW	3.3V always on power rail	ON	ON	ON*
+3V	3.3V power rail for SB	ON	ON	X
+3V_LAN	3.3V power rail for LAN	ON	ON	X
+3VS	3.3V switched power rail	ON	OFF	OFF
+5VALW	5V always on power rail	ON	ON	ON*
+5VS	5V switched power rail	ON	OFF	OFF
+VSB	VSB always on power rail	ON	ON	ON*
+RTCVCC	RTC power	ON	ON	ON

Note : ON* means that this power plane is ON only with AC power available, otherwise it is OFF.

External PCI Devices

Device	IDSEL#	REQ#/GNT#	Interrupts
1394/Card Reader	AD16	0	PIRQE
			PIRQG

EC SM Bus1 address

Device	Address
Smart Battery	0001 011X b
EEPROM(24C16/02)	1010 000X b
GMT G781-1	1001 101X b

EC SM Bus2 address

Device	Address
ADI ADM1032	1001 100X b

ICH8M SM Bus address

Device	Address
Clock Generator (ICS9LPRS365)	1101 001Xb
DDR DIMM0	1001 000Xb
DDR DIMM2	1001 010Xb

STATE \ SIGNAL	SLP_S1#	SLP_S3#	SLP_S4#	SLP_S5#	+VALW	+V	+VS	Clock
Full ON	HIGH	HIGH	HIGH	HIGH	ON	ON	ON	ON
S1(Power On Suspend)	LOW	HIGH	HIGH	HIGH	ON	ON	ON	LOW
S3 (Suspend to RAM)	LOW	LOW	HIGH	HIGH	ON	ON	OFF	OFF
S4 (Suspend to Disk)	LOW	LOW	LOW	HIGH	ON	OFF	OFF	OFF
S5 (Soft OFF)	LOW	LOW	LOW	LOW	ON	OFF	OFF	OFF

Board ID / SKU ID Table for AD channel

Vcc	3.3V +/- 5%
Ra/Rc/Re	100K +/- 5%

Board ID	Rb / Rd / Rf	V_{AD_BID} min	V_{AD_BID} typ	V_{AD_BID} max
0	0	0 V	0 V	0 V
1	8.2K +/- 5%	0.216 V	0.250 V	0.289 V
2	18K +/- 5%	0.436 V	0.503 V	0.538 V
3	33K +/- 5%	0.712 V	0.819 V	0.875 V
4	56K +/- 5%	1.036 V	1.185 V	1.264 V
5	100K +/- 5%	1.453 V	1.650 V	1.759 V
6	200K +/- 5%	1.935 V	2.200 V	2.341 V
7	NC	2.500 V	3.300 V	3.300 V

BOARD ID Table

Board ID	PCB Revision
0	0.1
1	0.2
2	0.3
3	1.0
4	1A
5	
6	
7	

BTO Option Table

BTO Item	BOM Structure
Discrete	PM@
UMA	GM@

THIS SHEET OF ENGINEERING DRAWING IS THE PROPRIETARY PROPERTY OF COMPAL ELECTRONICS, INC. AND CONTAINS CONFIDENTIAL AND TRADE SECRET INFORMATION. THIS SHEET MAY NOT BE TRANSFERED FROM THE CUSTODY OF THE COMPETENT DIVISION OF R&D DEPARTMENT EXCEPT AS AUTHORIZED BY COMPAL ELECTRONICS, INC. NEITHER THIS SHEET NOR THE INFORMATION IT CONTAINS MAY BE USED BY OR DISCLOSED TO ANY THIRD PARTY WITHOUT PRIOR WRITTEN CONSENT OF COMPAL ELECTRONICS, INC.

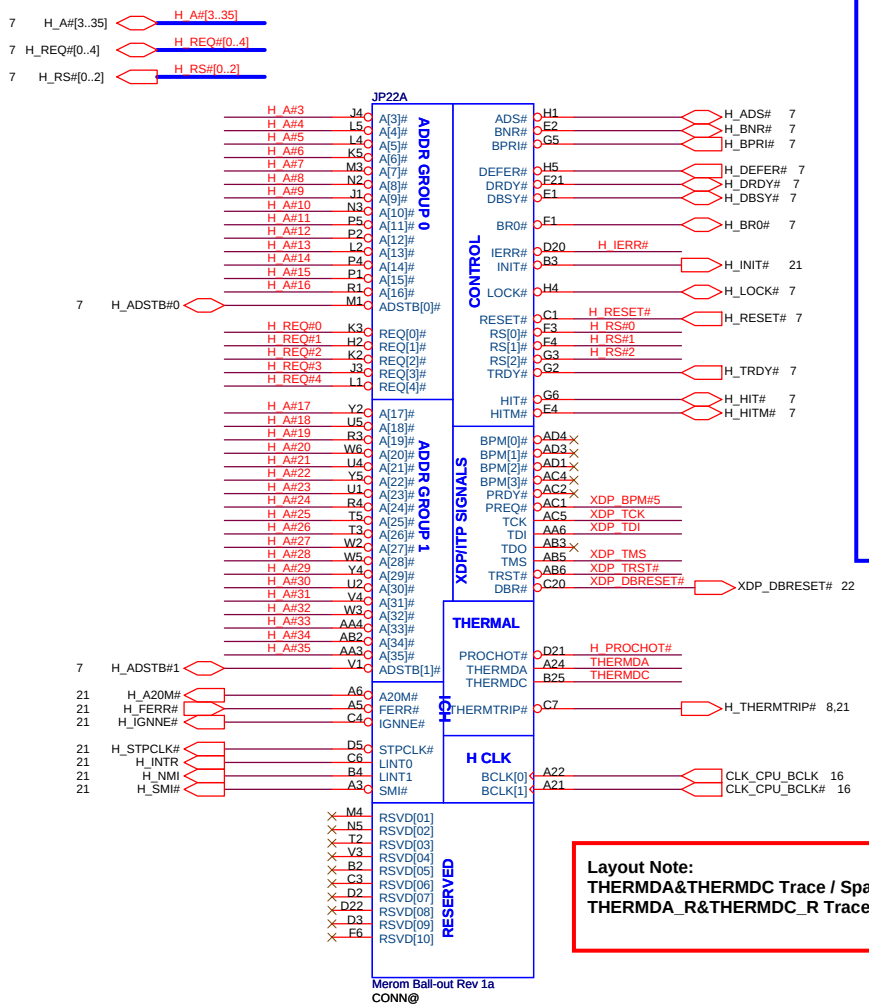

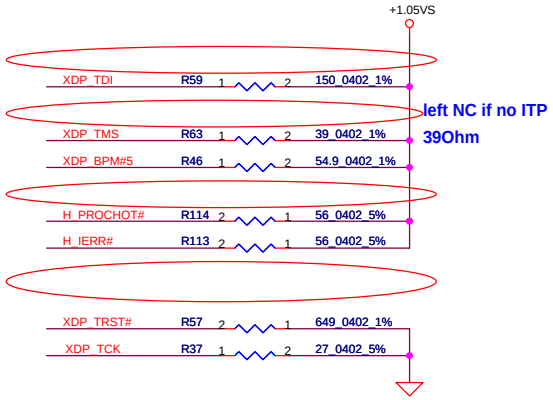

Layout Note:
THERMDA&THERMDC Trace / Space = 10 / 10 mil
THERMDA_R&THERMDC_R Trace / Space = 10 / 10 mil

BSEL2	BSEL1	BSEL0	BCLK
0	1	0	200
0	1	1	166

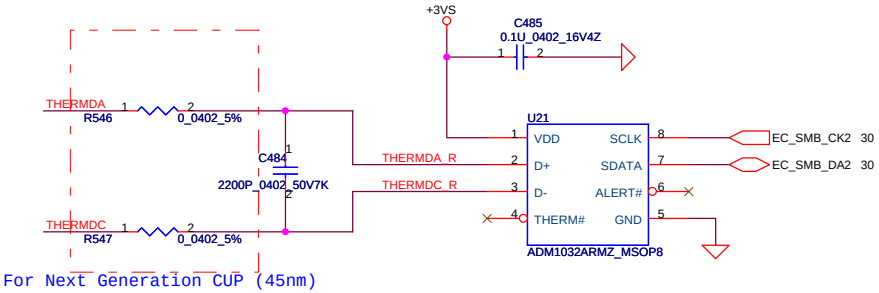

Security Classification	Compal Secret Data		
Issued Date	2006/12/25	Deciphered Date	2007/12/25

THIS SHEET OF ENGINEERING DRAWING IS THE PROPRIETARY PROPERTY OF COMPAL ELECTRONICS, INC. AND CONTAINS CONFIDENTIAL AND TRADE SECRET INFORMATION. THIS SHEET MAY NOT BE TRANSFERED FROM THE CUSTODY OF THE COMPETENT DIVISION OF R&D DEPARTMENT EXCEPT AS AUTHORIZED BY COMPAL ELECTRONICS, INC. NEITHER THIS SHEET NOR THE INFORMATION IT CONTAINS MAY BE USED BY OR DISCLOSED TO ANY THIRD PARTY WITHOUT PRIOR WRITTEN CONSENT OF COMPAL ELECTRONICS, INC.

Compal Electronics, Inc.

Title: Merom (1/3)

Size: B | Document Number: ICL50/ICK70 M/B LA-3551P Schematic | Rev: 1.0

Date: Monday, April 23, 2007 | Sheet 4 of 48

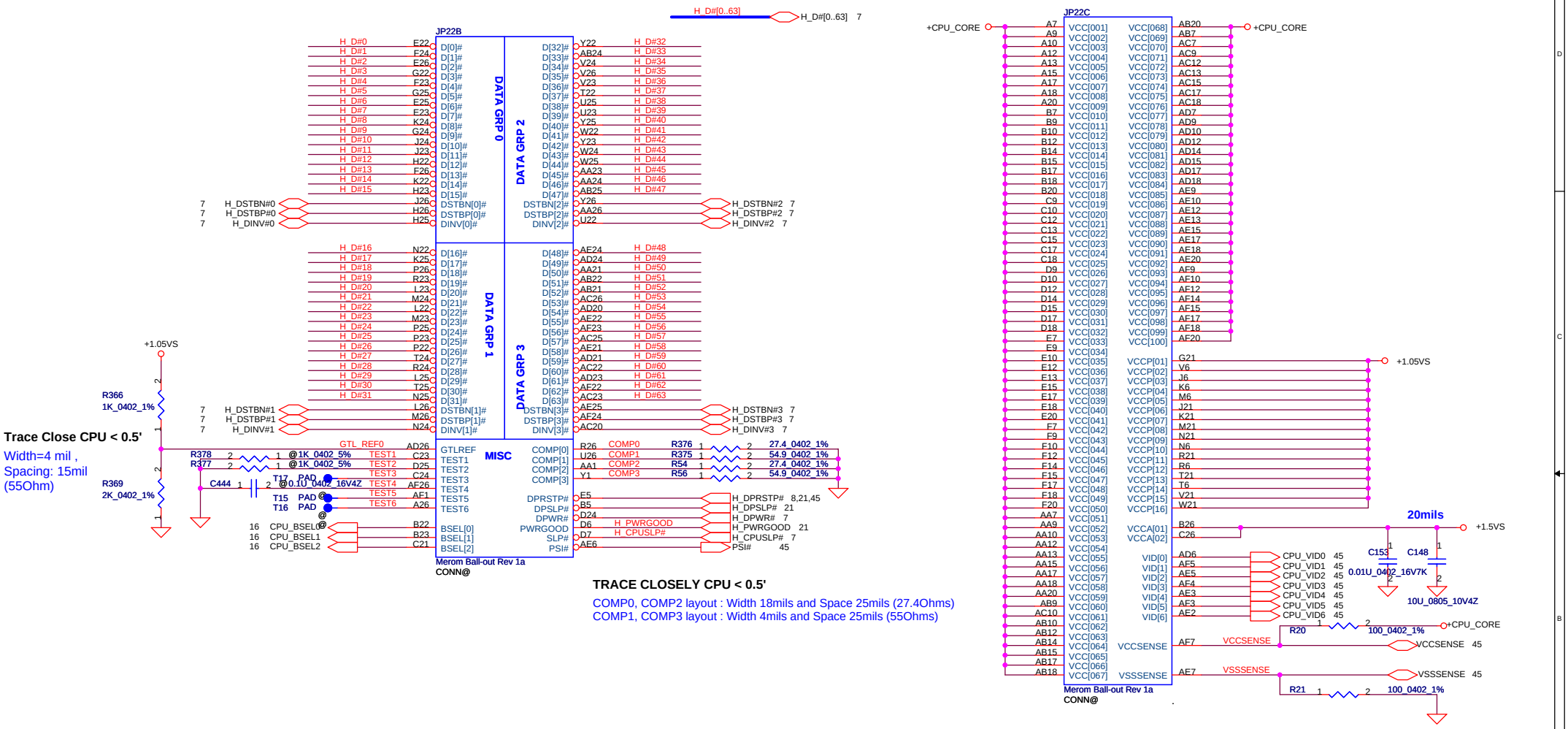

Security Classification	Compal Secret Data		
Issued Date	2006/12/25	Deciphered Date	2007/12/25

THIS SHEET OF ENGINEERING DRAWING IS THE PROPRIETARY PROPERTY OF COMPAL ELECTRONICS, INC. AND CONTAINS CONFIDENTIAL AND TRADE SECRET INFORMATION. THIS SHEET MAY NOT BE TRANSFERED FROM THE CUSTODY OF THE COMPETENT DIVISION OF R&D DEPARTMENT EXCEPT AS AUTHORIZED BY COMPAL ELECTRONICS, INC. NEITHER THIS SHEET NOR THE INFORMATION IT CONTAINS MAY BE USED BY OR DISCLOSED TO ANY THIRD PARTY WITHOUT PRIOR WRITTEN CONSENT OF COMPAL ELECTRONICS, INC.

Compal Electronics, Inc.

Title: Merom (2/3)

Size: B | Document Number: ICL50/ICK70 M/B LA-3551P Schematic | Rev: 1.0

Date: Monday, April 23, 2007 | Sheet 5 of 48

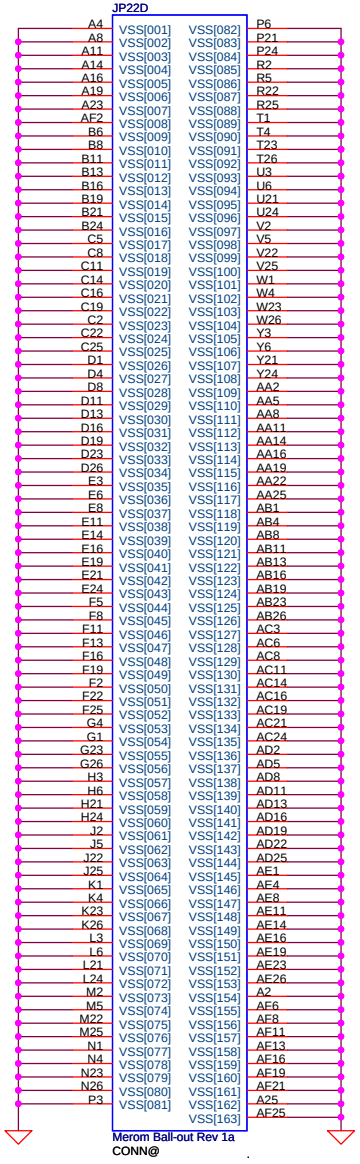

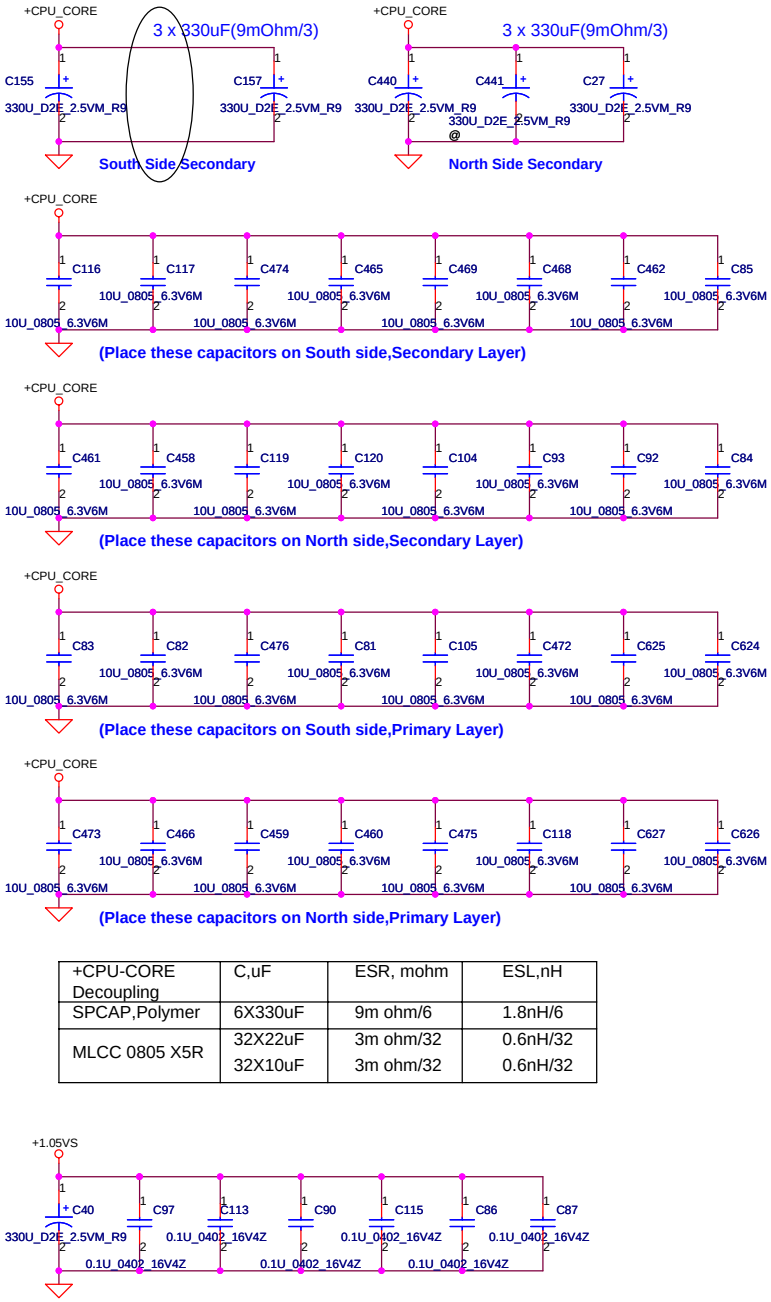

+CPU-CORE Decoupling	C,uF	ESR, mohm	ESL,nH
SPCAP,Polymer	6X330uF	9m ohm/6	1.8nH/6
MLCC 0805 X5R	32X22uF 32X10uF	3m ohm/32 3m ohm/32	0.6nH/32 0.6nH/32

Security Classification	Compal Secret Data		
Issued Date	2006/12/25	Deciphered Date	2007/12/25

THIS SHEET OF ENGINEERING DRAWING IS THE PROPRIETARY PROPERTY OF COMPAL ELECTRONICS, INC. AND CONTAINS CONFIDENTIAL AND TRADE SECRET INFORMATION. THIS SHEET MAY NOT BE TRANSFERED FROM THE CUSTODY OF THE COMPETENT DIVISION OF R&D DEPARTMENT EXCEPT AS AUTHORIZED BY COMPAL ELECTRONICS, INC. NEITHER THIS SHEET NOR THE INFORMATION IT CONTAINS MAY BE USED BY OR DISCLOSED TO ANY THIRD PARTY WITHOUT PRIOR WRITTEN CONSENT OF COMPAL ELECTRONICS, INC.

Compal Electronics, Inc.

Title: Merom (3/3)

Size: B | Document Number: ICL50/ICK70 M/B LA-3551P Schematic | Rev: 1.0

Date: Monday, April 23, 2007 | Sheet 6 of 48

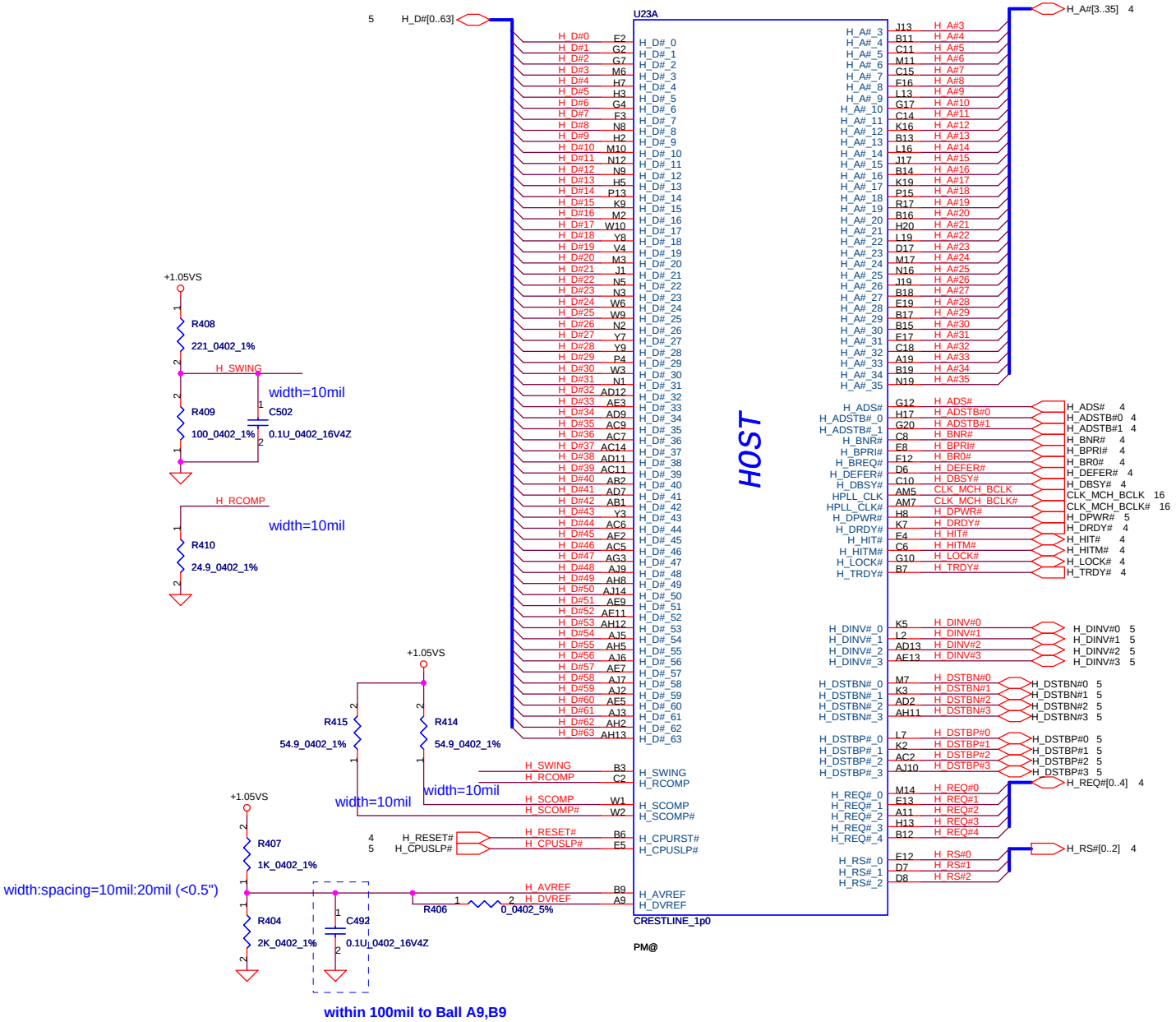

Security Classification	Compal Secret Data		
Issued Date	2006/12/25	Deciphered Date	2007/12/25

THIS SHEET OF ENGINEERING DRAWING IS THE PROPRIETARY PROPERTY OF COMPAL ELECTRONICS, INC. AND CONTAINS CONFIDENTIAL AND TRADE SECRET INFORMATION. THIS SHEET MAY NOT BE TRANSFERED FROM THE CUSTODY OF THE COMPETENT DIVISION OF R&D DEPARTMENT EXCEPT AS AUTHORIZED BY COMPAL ELECTRONICS, INC. NEITHER THIS SHEET NOR THE INFORMATION IT CONTAINS MAY BE USED BY OR DISCLOSED TO ANY THIRD PARTY WITHOUT PRIOR WRITTEN CONSENT OF COMPAL ELECTRONICS, INC.

Compal Electronics, Inc.

Title: Crestline GMCH(1/7)-GTL

Size: B | Document Number: ICL50/ICK70 M/B LA-3551P Schematic | Rev: 1.0

Date: Monday, April 23, 2007 | Sheet 7 of 48

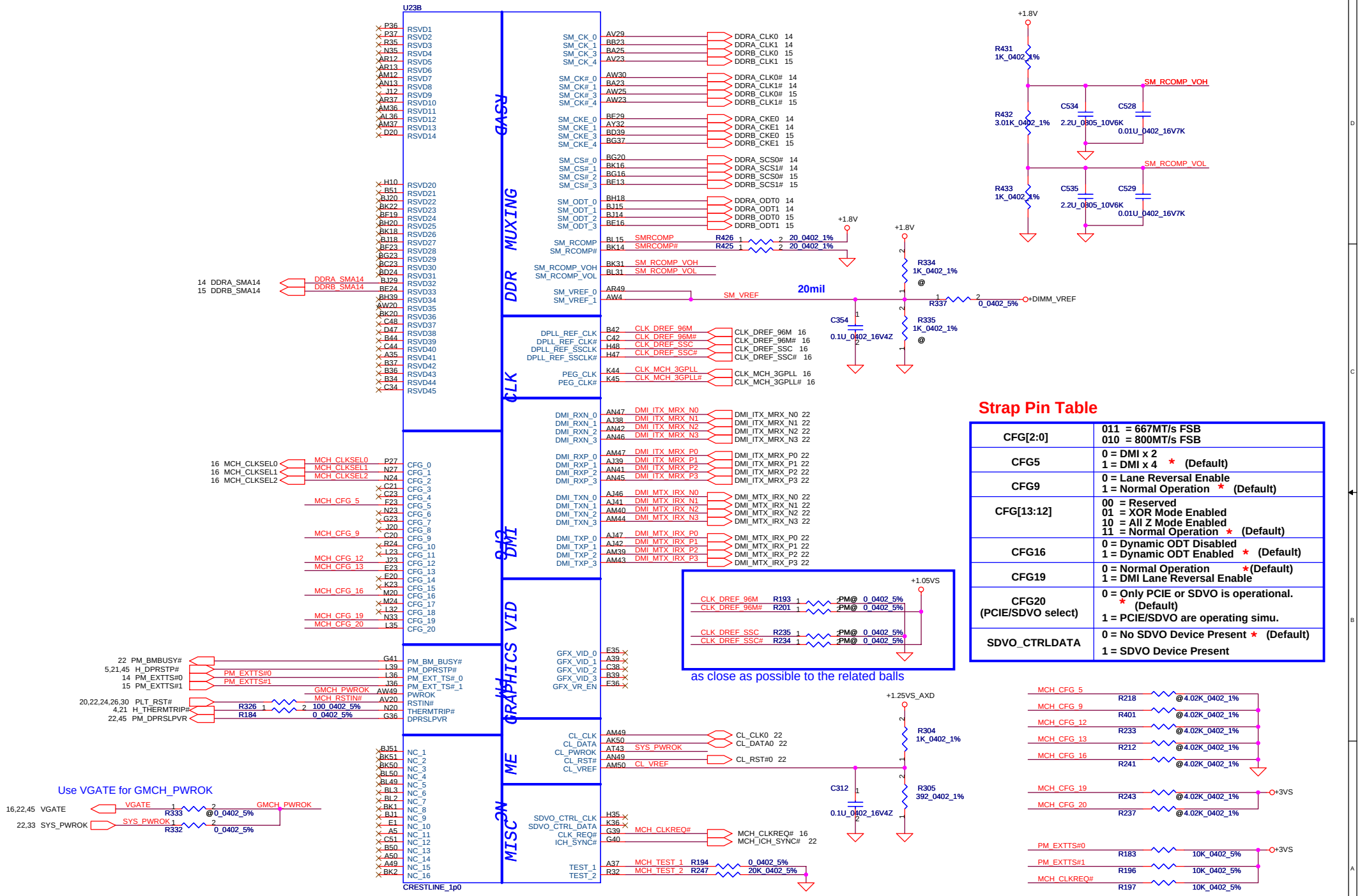

Strap Pin Table

CFG[2:0]	011 = 667MT/s FSB 010 = 800MT/s FSB
CFG5	0 = DMI x 2 1 = DMI x 4 * (Default)
CFG9	0 = Lane Reversal Enable 1 = Normal Operation * (Default)
CFG[13:12]	00 = Reserved 01 = XOR Mode Enabled 10 = All Z Mode Enabled 11 = Normal Operation * (Default)
CFG16	0 = Dynamic ODT Disabled 1 = Dynamic ODT Enabled * (Default)
CFG19	0 = Normal Operation *(Default) 1 = DMI Lane Reversal Enable
CFG20 (PCIE/SDVO select)	0 = Only PCIE or SDVO is operational. * (Default) 1 = PCIE/SDVO are operating simu.
SDVO_CTRLDATA	0 = No SDVO Device Present * (Default) 1 = SDVO Device Present

Security Classification	Compal Secret Data		
Issued Date	2006/12/25	Deciphered Date	2007/12/25

THIS SHEET OF ENGINEERING DRAWING IS THE PROPRIETARY PROPERTY OF COMPAL ELECTRONICS, INC. AND CONTAINS CONFIDENTIAL AND TRADE SECRET INFORMATION. THIS SHEET MAY NOT BE TRANSFERED FROM THE CUSTODY OF THE COMPETENT DIVISION OF R&D DEPARTMENT EXCEPT AS AUTHORIZED BY COMPAL ELECTRONICS, INC. NEITHER THIS SHEET NOR THE INFORMATION IT CONTAINS MAY BE USED BY OR DISCLOSED TO ANY THIRD PARTY WITHOUT PRIOR WRITTEN CONSENT OF COMPAL ELECTRONICS, INC.

Compal Electronics, Inc.

Title: Crestline GMCH (2/7)-DMI/DDR

Size: Custom | Document Number: ICL50/ICK70 M/B LA-3551P Schematic | Rev: 0.0

Date: Monday, April 23, 2007 | Sheet 8 of 48

14 DDRA_SDQ[0..63] — DDRA_SDQ[0..63]
14 DDRA_SDM[0..7] — DDRA_SDM[0..7]
14 DDRA_SMA[0..13] — DDRA_SMA[0..13]

15 DDRB_SDQ[0..63] — DDRB_SDQ[0..63]
15 DDRB_SDM[0..7] — DDRB_SDM[0..7]
15 DDRB_SMA[0..13] — DDRB_SMA[0..13]

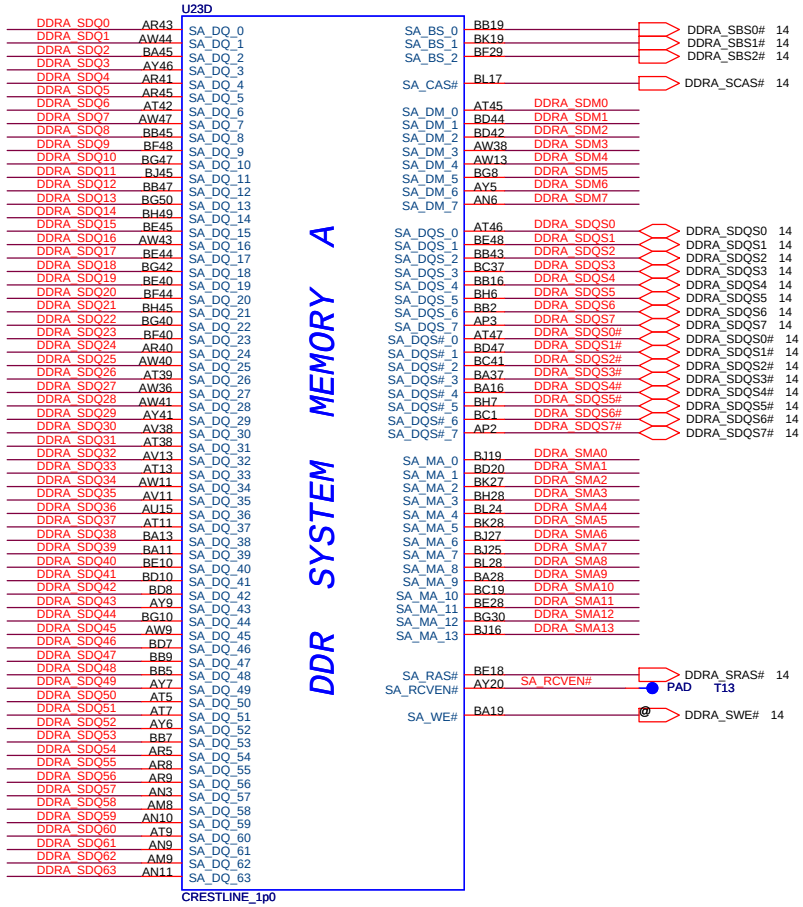

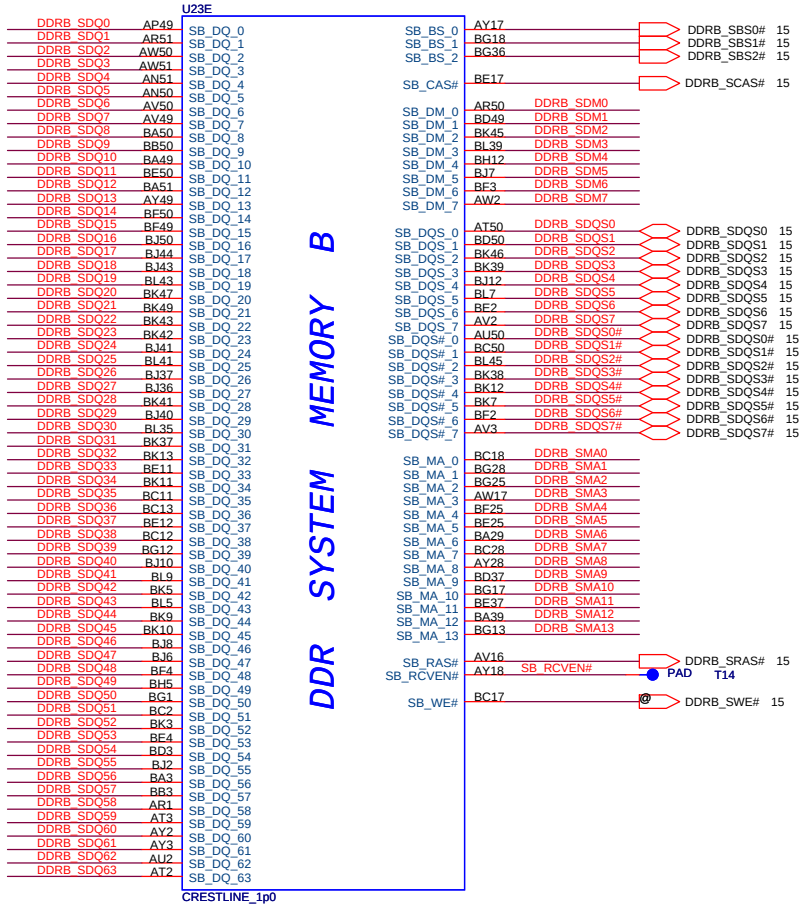

Security Classification	Compal Secret Data		
Issued Date	2006/12/25	Deciphered Date	2007/12/25

THIS SHEET OF ENGINEERING DRAWING IS THE PROPRIETARY PROPERTY OF COMPAL ELECTRONICS, INC. AND CONTAINS CONFIDENTIAL AND TRADE SECRET INFORMATION. THIS SHEET MAY NOT BE TRANSFERED FROM THE CUSTODY OF THE COMPETENT DIVISION OF R&D DEPARTMENT EXCEPT AS AUTHORIZED BY COMPAL ELECTRONICS, INC. NEITHER THIS SHEET NOR THE INFORMATION IT CONTAINS MAY BE USED BY OR DISCLOSED TO ANY THIRD PARTY WITHOUT PRIOR WRITTEN CONSENT OF COMPAL ELECTRONICS, INC.

Compal Electronics, Inc.

Title: Crestline GMCH (3/7)-DDRII

Size: B | Document Number: ICL50/ICK70 M/B LA-3551P Schematic | Rev: 1.0

Date: Monday, April 23, 2007 | Sheet 9 of 48

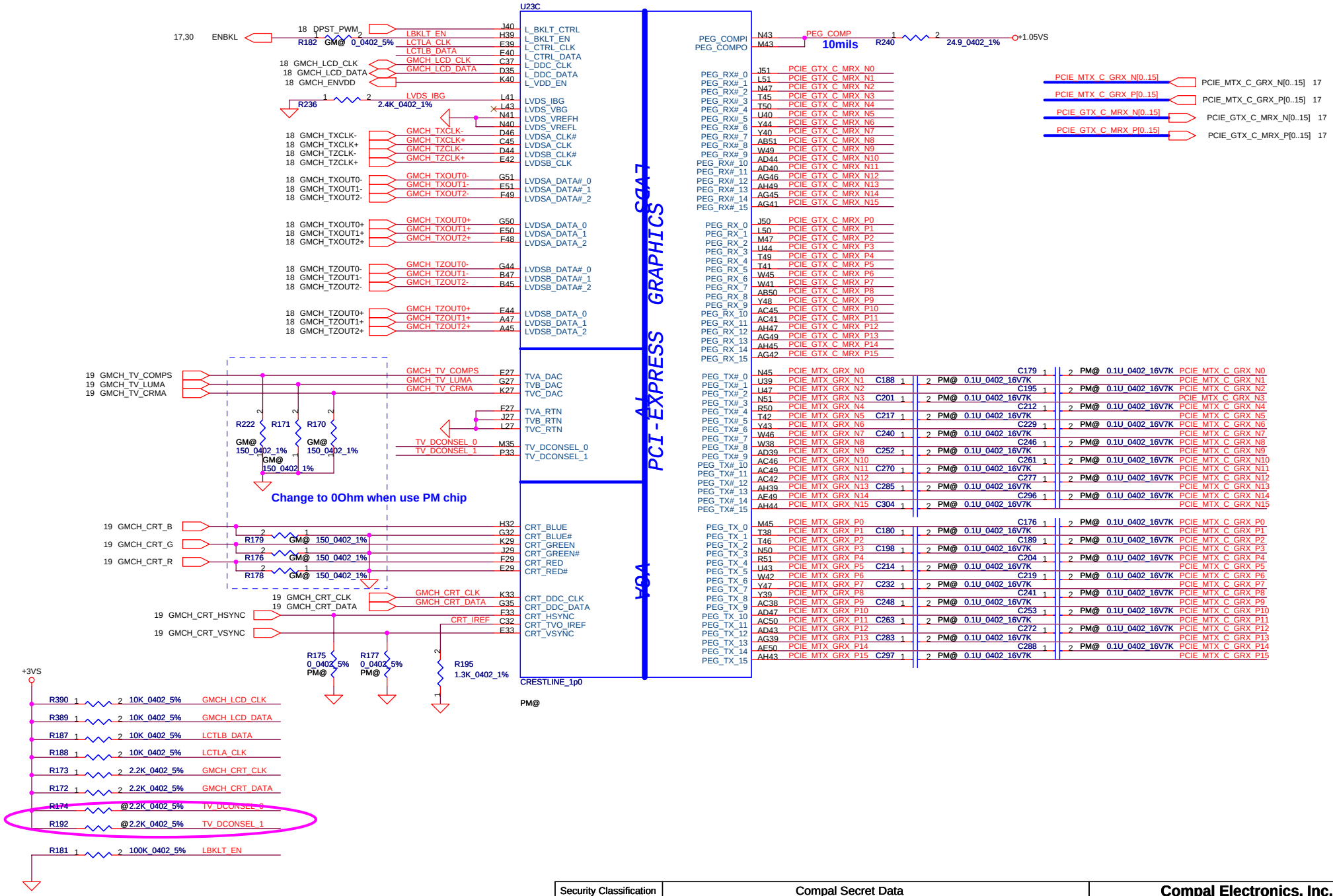

Security Classification	Compal Secret Data		
Issued Date	2006/12/25	Deciphered Date	2007/12/25

THIS SHEET OF ENGINEERING DRAWING IS THE PROPRIETARY PROPERTY OF COMPAL ELECTRONICS, INC. AND CONTAINS CONFIDENTIAL AND TRADE SECRET INFORMATION. THIS SHEET MAY NOT BE TRANSFERED FROM THE CUSTODY OF THE COMPETENT DIVISION OF R&D DEPARTMENT EXCEPT AS AUTHORIZED BY COMPAL ELECTRONICS, INC. NEITHER THIS SHEET NOR THE INFORMATION IT CONTAINS MAY BE USED BY OR DISCLOSED TO ANY THIRD PARTY WITHOUT PRIOR WRITTEN CONSENT OF COMPAL ELECTRONICS, INC.

Compal Electronics, Inc.

Title: Crestline GMCH (4/7)-VGA/LVDS/TV

Size: Custom | Document Number: ICL50/ICK70 M/B LA-3551P Schematic | Rev: 1.0

Date: Monday, April 23, 2007 | Sheet 10 of 48

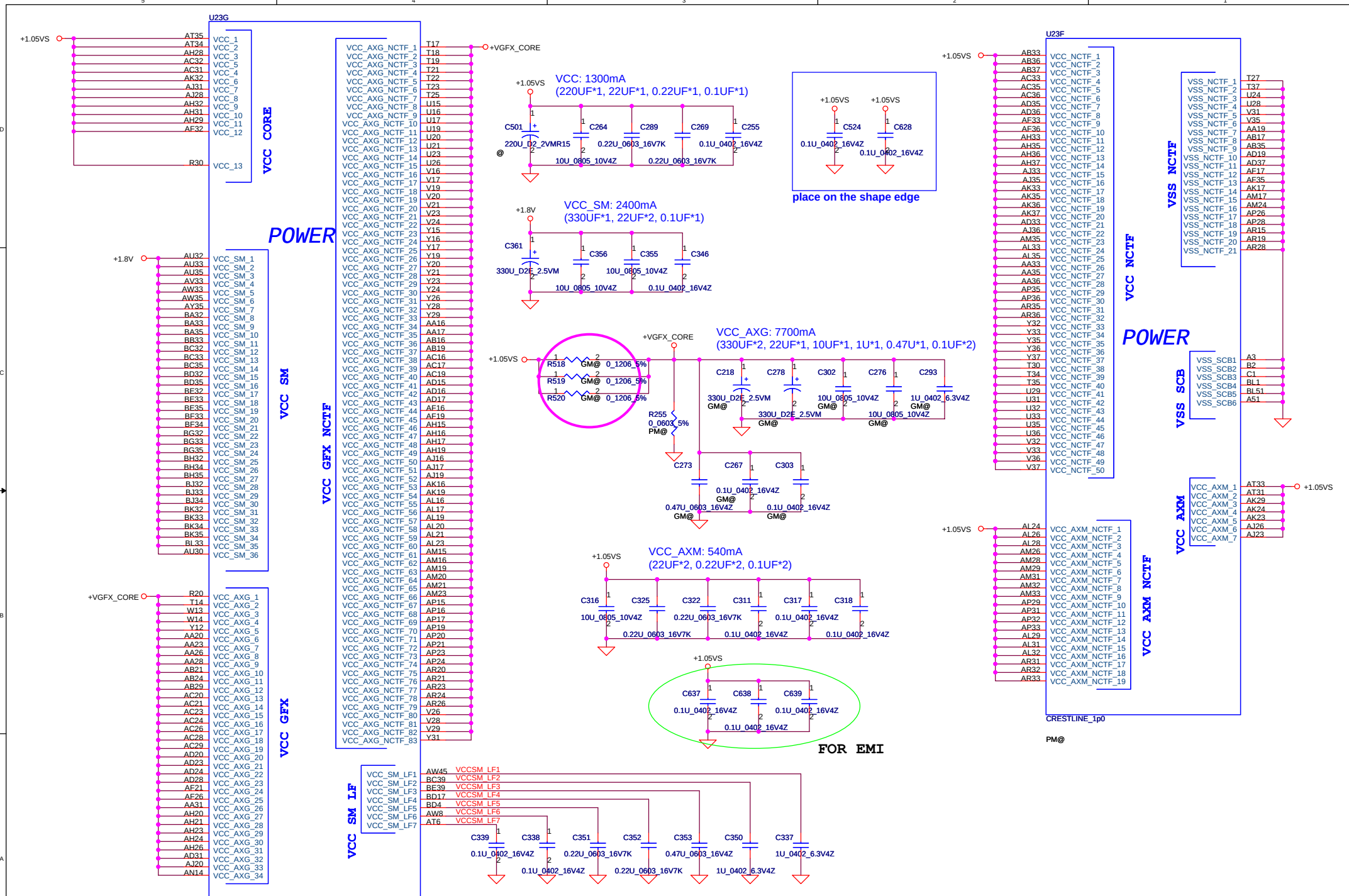

Security Classification	Compal Secret Data		
Issued Date	2006/12/25	Deciphered Date	2007/12/25

THIS SHEET OF ENGINEERING DRAWING IS THE PROPRIETARY PROPERTY OF COMPAL ELECTRONICS, INC. AND CONTAINS CONFIDENTIAL AND TRADE SECRET INFORMATION. THIS SHEET MAY NOT BE TRANSFERED FROM THE CUSTODY OF THE COMPETENT DIVISION OF R&D DEPARTMENT EXCEPT AS AUTHORIZED BY COMPAL ELECTRONICS, INC. NEITHER THIS SHEET NOR THE INFORMATION IT CONTAINS MAY BE USED BY OR DISCLOSED TO ANY THIRD PARTY WITHOUT PRIOR WRITTEN CONSENT OF COMPAL ELECTRONICS, INC.

Compal Electronics, Inc.

Title: Crestline GMCH (5/7)-VCC

Size: B | Document Number: ICL50/ICK70 M/B LA-3551P Schematic | Rev: 1.0

Date: Monday, April 23, 2007 | Sheet 11 of 48

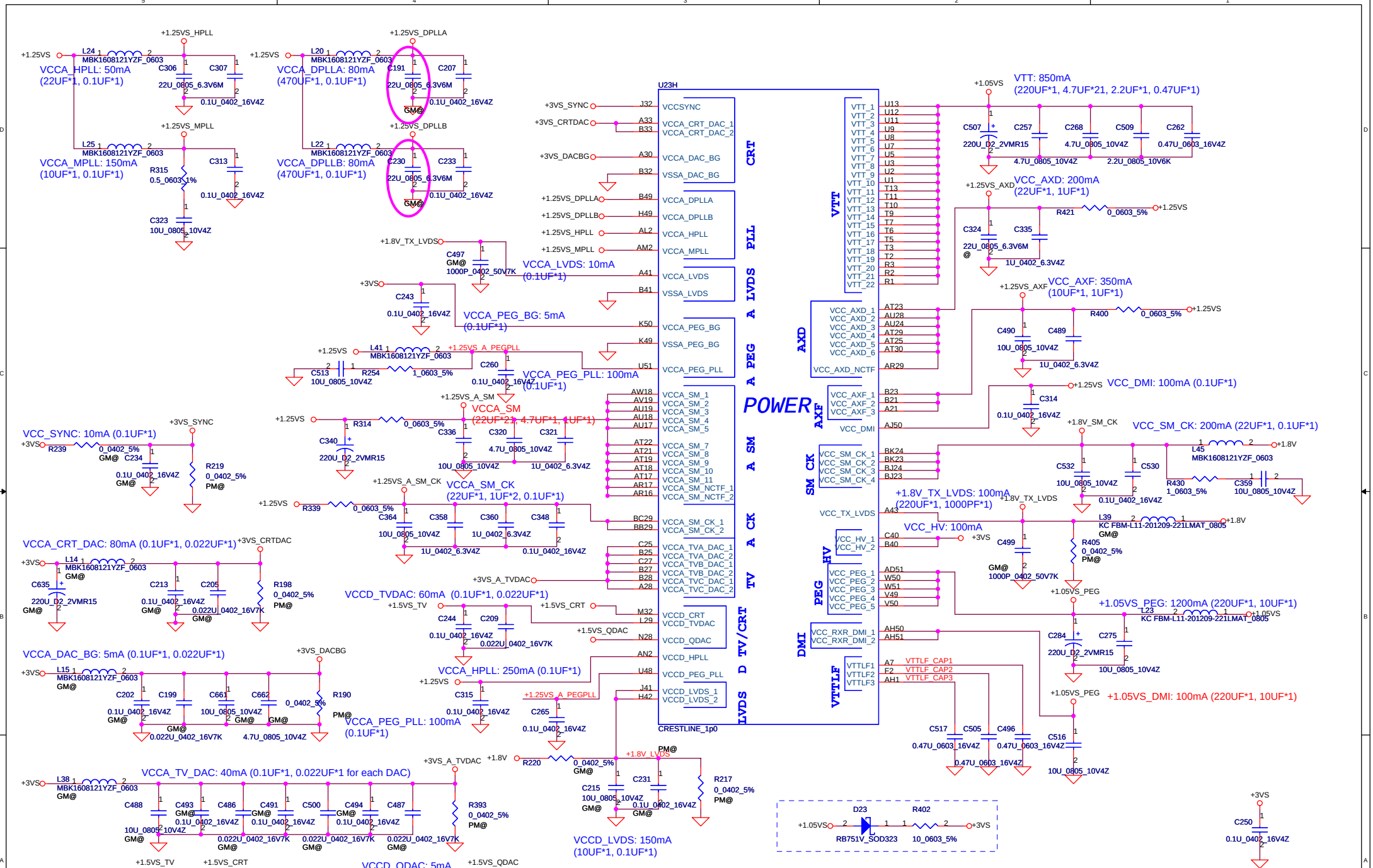

Security Classification	Compal Secret Data		
Issued Date	2006/12/25	Deciphered Date	2007/12/25

THIS SHEET OF ENGINEERING DRAWING IS THE PROPRIETARY PROPERTY OF COMPAL ELECTRONICS, INC. AND CONTAINS CONFIDENTIAL AND TRADE SECRET INFORMATION. THIS SHEET MAY NOT BE TRANSFERED FROM THE CUSTODY OF THE COMPETENT DIVISION OF R&D DEPARTMENT EXCEPT AS AUTHORIZED BY COMPAL ELECTRONICS, INC. NEITHER THIS SHEET NOR THE INFORMATION IT CONTAINS MAY BE USED BY OR DISCLOSED TO ANY THIRD PARTY WITHOUT PRIOR WRITTEN CONSENT OF COMPAL ELECTRONICS, INC.

Compal Electronics, Inc.

Title: Crestline GMCH (6/7)-VCC

Size: B | Document Number: ICL50/ICK70 M/B LA-3551P Schematic | Rev: 1.0

Date: Monday, April 23, 2007 | Sheet 12 of 48

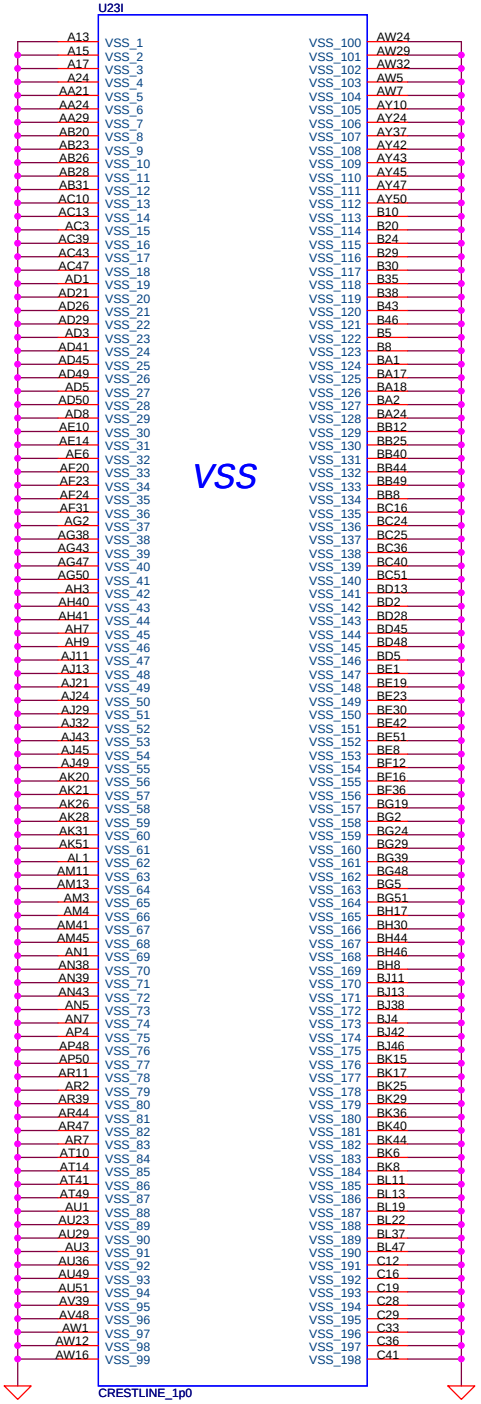

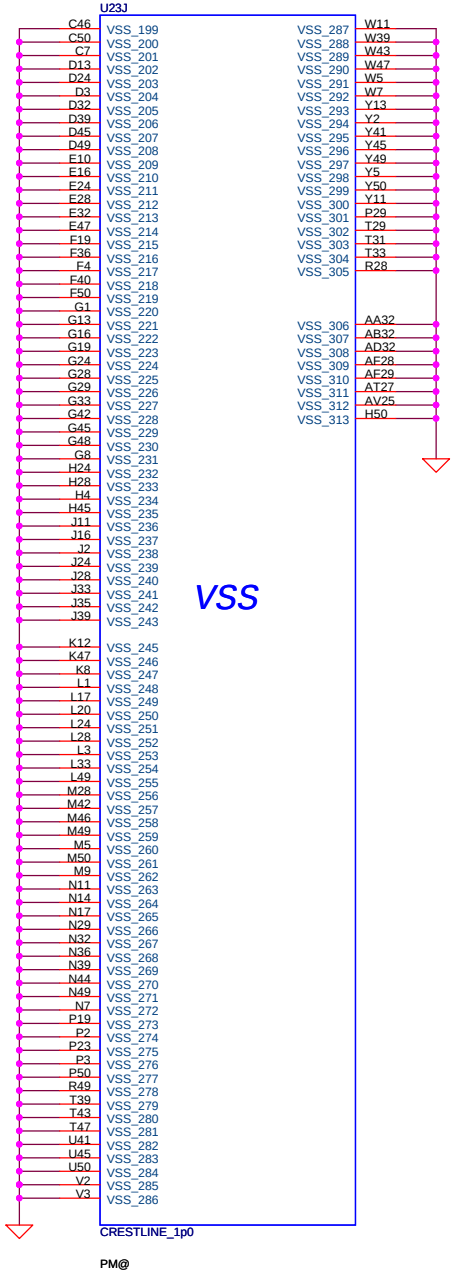

Security Classification	Compal Secret Data		
Issued Date	2006/12/25	Deciphered Date	2007/12/25

THIS SHEET OF ENGINEERING DRAWING IS THE PROPRIETARY PROPERTY OF COMPAL ELECTRONICS, INC. AND CONTAINS CONFIDENTIAL AND TRADE SECRET INFORMATION. THIS SHEET MAY NOT BE TRANSFERED FROM THE CUSTODY OF THE COMPETENT DIVISION OF R&D DEPARTMENT EXCEPT AS AUTHORIZED BY COMPAL ELECTRONICS, INC. NEITHER THIS SHEET NOR THE INFORMATION IT CONTAINS MAY BE USED BY OR DISCLOSED TO ANY THIRD PARTY WITHOUT PRIOR WRITTEN CONSENT OF COMPAL ELECTRONICS, INC.

Compal Electronics, Inc.

Title: Crestline GMCH (7/7)-GND

Size: B | Document Number: ICL50/ICK70 M/B LA-3551P Schematic | Rev: 1.0

Date: Monday, April 23, 2007 | Sheet 13 of 48

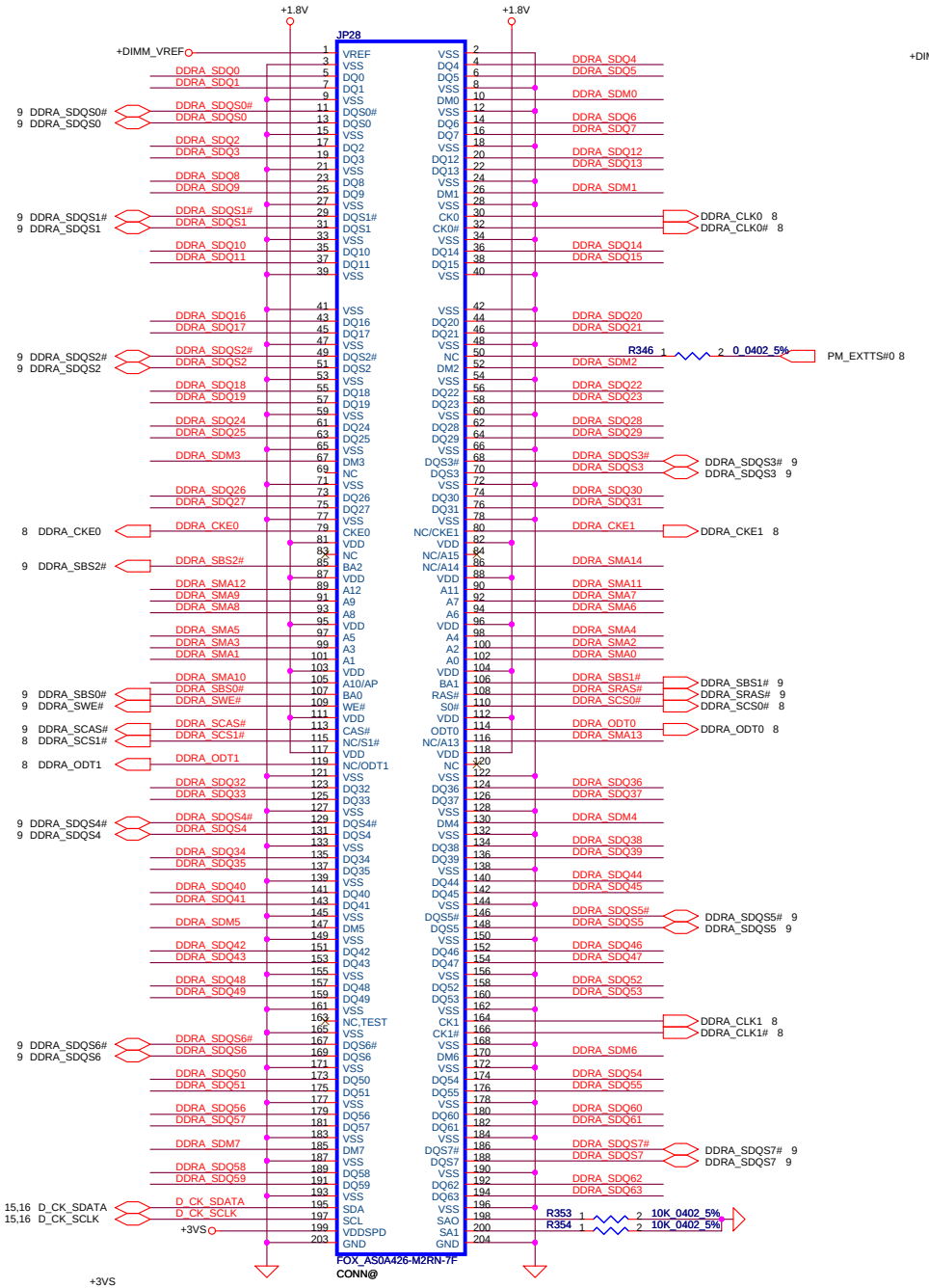

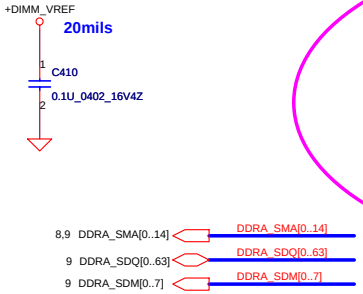

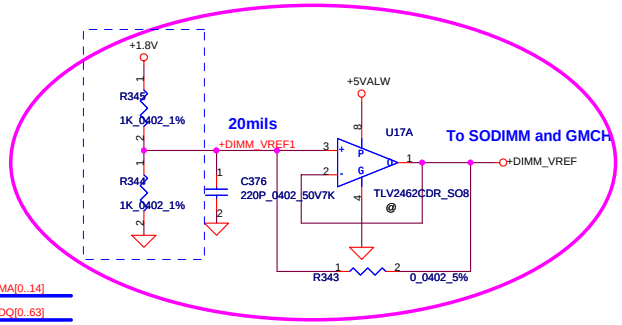

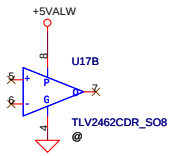

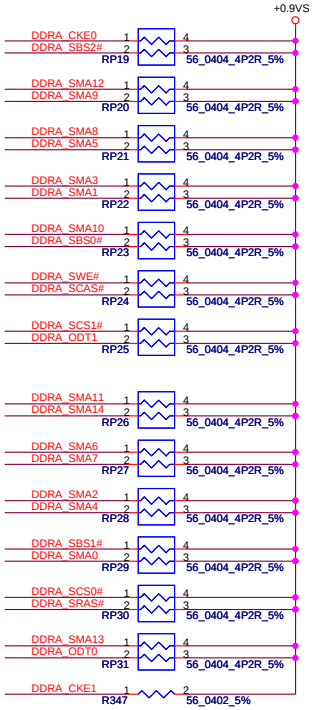

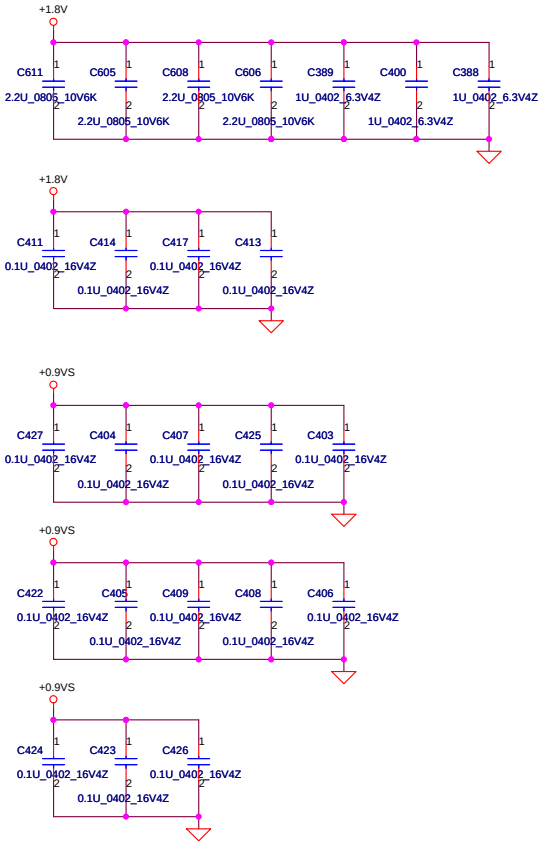

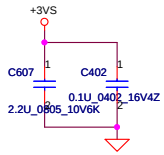

DIMM0 REV H:5.2mm (BOT)

Security Classification	Compal Secret Data			Compal Electronics, Inc.
Issued Date	2006/12/25	Deciphered Date	2007/12/25	Title: DDRII-SODIMM0
THIS SHEET OF ENGINEERING DRAWING IS THE PROPRIETARY PROPERTY OF COMPAL ELECTRONICS, INC. AND CONTAINS CONFIDENTIAL AND TRADE SECRET INFORMATION. THIS SHEET MAY NOT BE TRANSFERED FROM THE CUSTODY OF THE COMPETENT DIVISION OF R&D DEPARTMENT EXCEPT AS AUTHORIZED BY COMPAL ELECTRONICS, INC. NEITHER THIS SHEET NOR THE INFORMATION IT CONTAINS MAY BE USED BY OR DISCLOSED TO ANY THIRD PARTY WITHOUT PRIOR WRITTEN CONSENT OF COMPAL ELECTRONICS, INC.				Size: B; Document Number: ICL50/ICK70 M/B LA-3551P Schematic; Rev: 1.0
				Date: Monday, April 23, 2007; Sheet 14 of 48

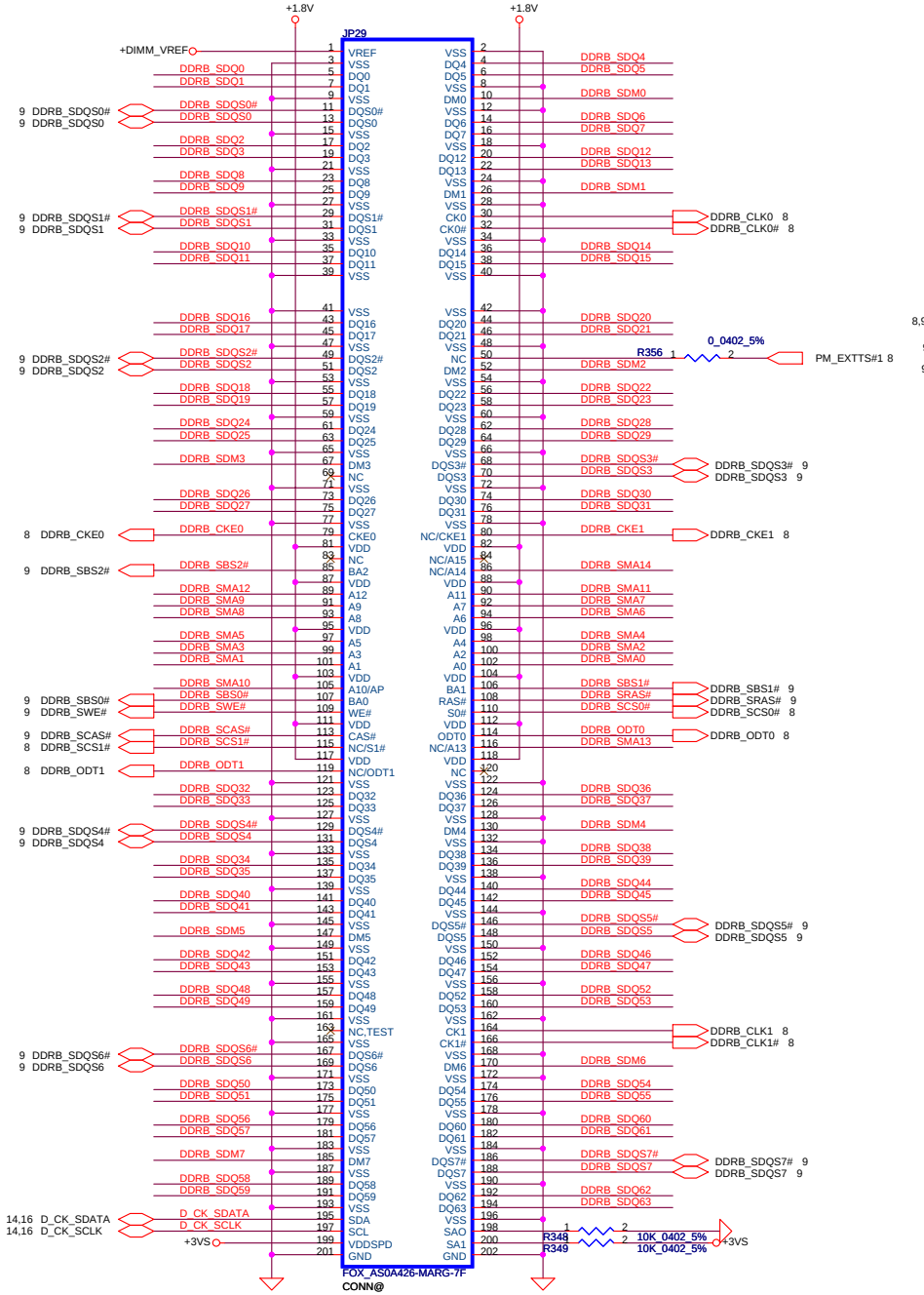

DIMM1 REV H:9.2mm (BOT)

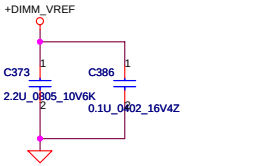

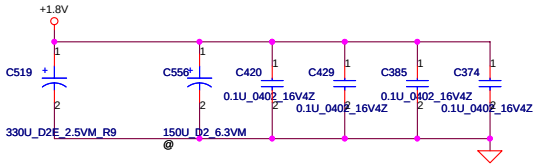

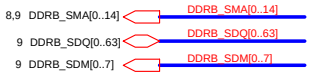

For EMI

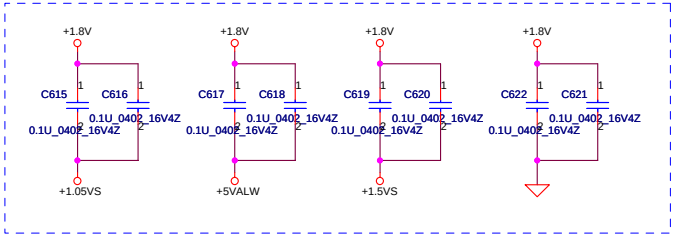

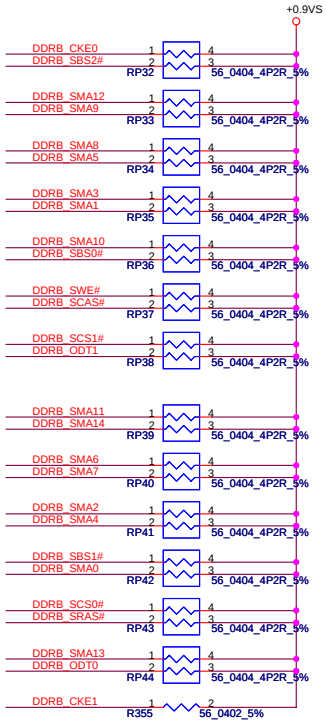

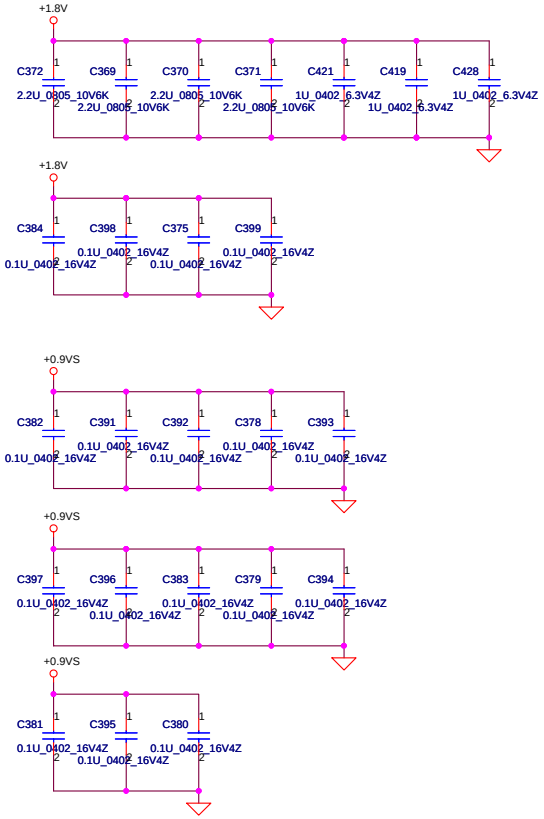

Security Classification	Compal Secret Data			Compal Electronics, Inc.
Issued Date	2006/12/25	Deciphered Date	2007/12/25	Title: DDRII-SODIMM1
THIS SHEET OF ENGINEERING DRAWING IS THE PROPRIETARY PROPERTY OF COMPAL ELECTRONICS, INC. AND CONTAINS CONFIDENTIAL AND TRADE SECRET INFORMATION. THIS SHEET MAY NOT BE TRANSFERED FROM THE CUSTODY OF THE COMPETENT DIVISION OF R&D DEPARTMENT EXCEPT AS AUTHORIZED BY COMPAL ELECTRONICS, INC. NEITHER THIS SHEET NOR THE INFORMATION IT CONTAINS MAY BE USED BY OR DISCLOSED TO ANY THIRD PARTY WITHOUT PRIOR WRITTEN CONSENT OF COMPAL ELECTRONICS, INC.				Size: B; Document Number: ICL50/ICK70 M/B LA-3551P Schematic; Rev: 1.0
				Date: Monday, April 23, 2007; Sheet 15 of 48

Clock Generator

FSLC CLKSEL2	FSLB CLKSEL1	FSLA CLKSEL0	CPU MHz	SRC MHz	PCI MHz
0	1	0	200	100	33.3
0	1	1	166	100	33.3

Table : ICS9LPR365

CLK_REQ#	Control	Free-Run
CR#_A(WLAN)	PCIEX2	PCIEX0
CR#_B(MCH)	PCIEX4	PCIEX1
CR#_G(NEW CARD)	PCIEX9	
CR#_H(MINI CARDII)	PCIEX10	

SRC6(VGA_CLK): Discrete VGA[Enable] UMA[Disable]

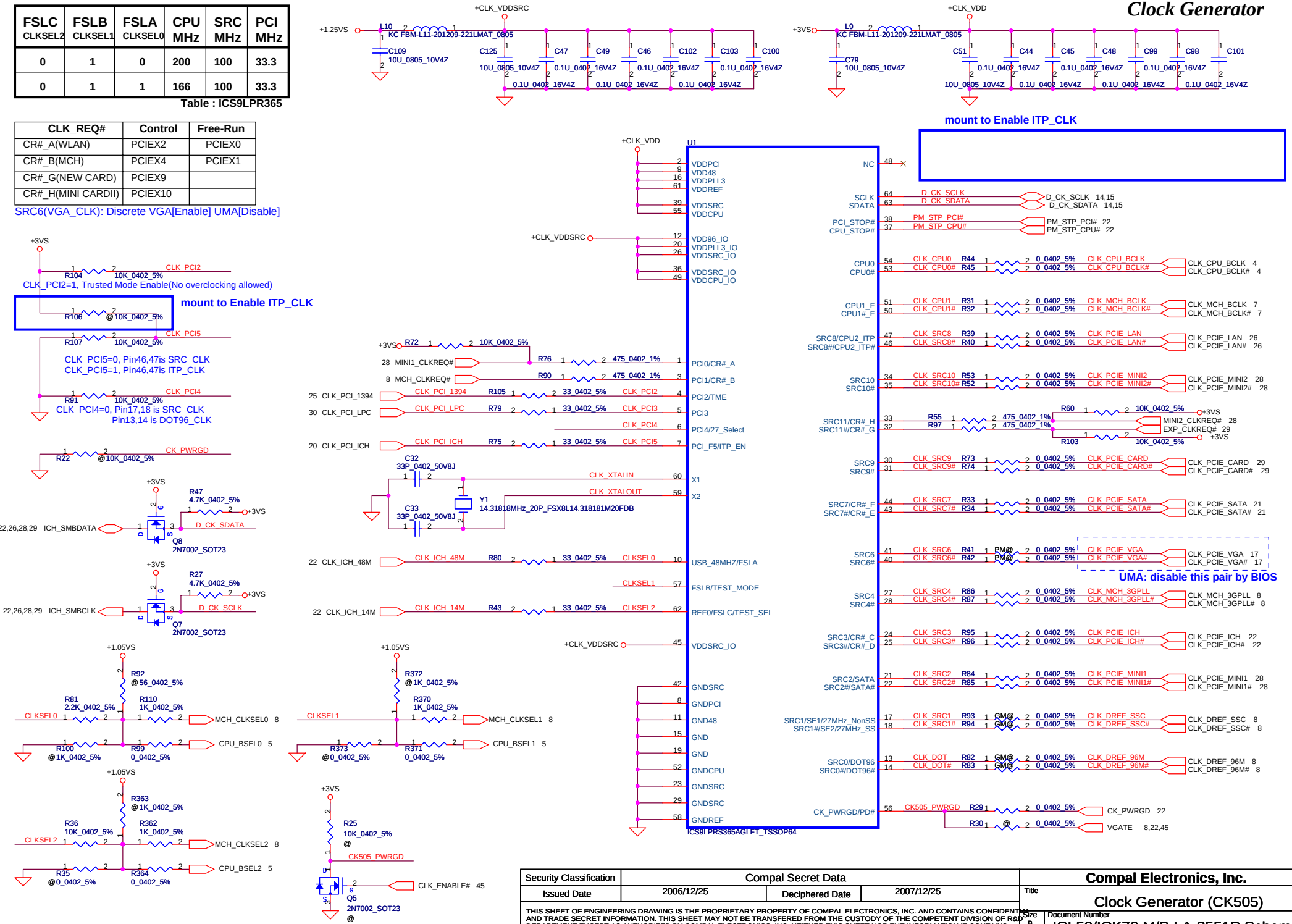

Security Classification	Compal Secret Data		
Issued Date	2006/12/25	Deciphered Date	2007/12/25

THIS SHEET OF ENGINEERING DRAWING IS THE PROPRIETARY PROPERTY OF COMPAL ELECTRONICS, INC. AND CONTAINS CONFIDENTIAL AND TRADE SECRET INFORMATION. THIS SHEET MAY NOT BE TRANSFERED FROM THE CUSTODY OF THE COMPETENT DIVISION OF R&D DEPARTMENT EXCEPT AS AUTHORIZED BY COMPAL ELECTRONICS, INC. NEITHER THIS SHEET NOR THE INFORMATION IT CONTAINS MAY BE USED BY OR DISCLOSED TO ANY THIRD PARTY WITHOUT PRIOR WRITTEN CONSENT OF COMPAL ELECTRONICS, INC.

Compal Electronics, Inc.

Title: Clock Generator (CK505)

Size: B | Document Number: ICL50/ICK70 M/B LA-3551P Schematic | Rev: 1.0

Date: Monday, April 23, 2007 | Sheet 16 of 48

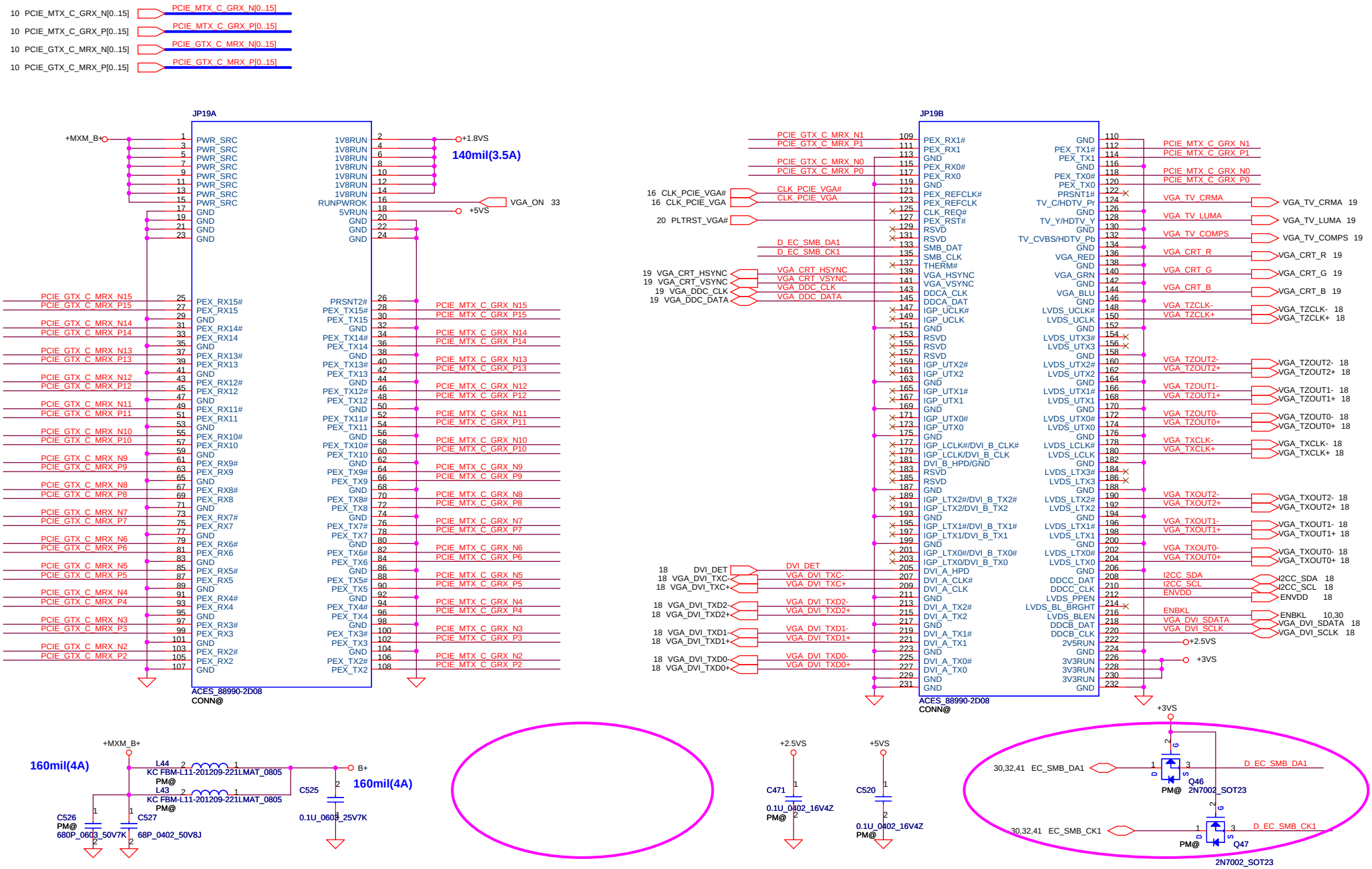

Security Classification	Compal Secret Data		
Issued Date	2006/12/25	Deciphered Date	2007/12/25

THIS SHEET OF ENGINEERING DRAWING IS THE PROPRIETARY PROPERTY OF COMPAL ELECTRONICS, INC. AND CONTAINS CONFIDENTIAL AND TRADE SECRET INFORMATION. THIS SHEET MAY NOT BE TRANSFERED FROM THE CUSTODY OF THE COMPETENT DIVISION OF R&D DEPARTMENT EXCEPT AS AUTHORIZED BY COMPAL ELECTRONICS, INC. NEITHER THIS SHEET NOR THE INFORMATION IT CONTAINS MAY BE USED BY OR DISCLOSED TO ANY THIRD PARTY WITHOUT PRIOR WRITTEN CONSENT OF COMPAL ELECTRONICS, INC.

Compal Electronics, Inc.

Title: MXM Connector

Size: B | Document Number: ICL50/ICK70 M/B LA-3551P Schematic | Rev: 1.0

Date: Monday, April 23, 2007 | Sheet 17 of 48

LCD POWER CIRCUIT

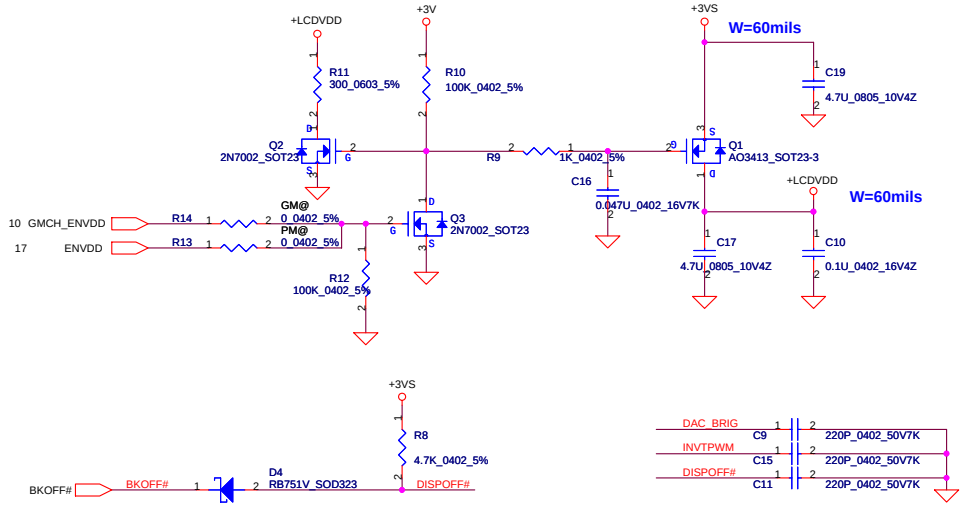

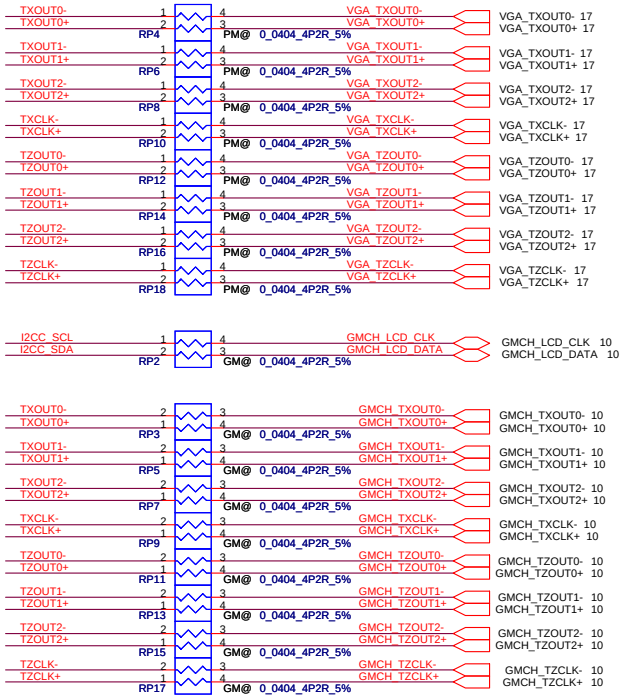

LCD/PANEL BD. Conn.

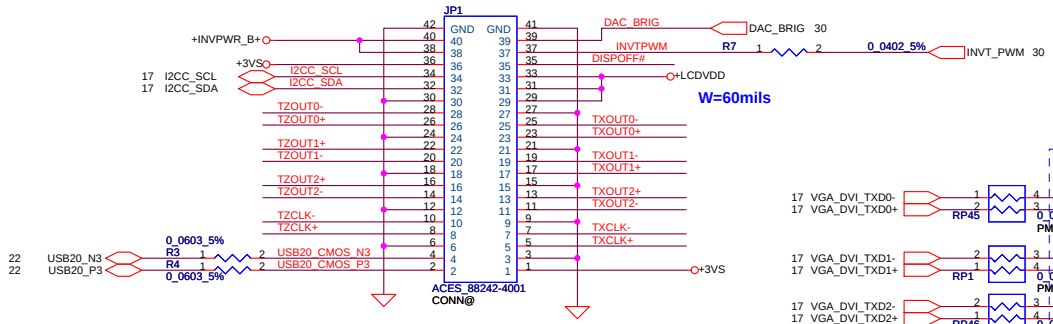

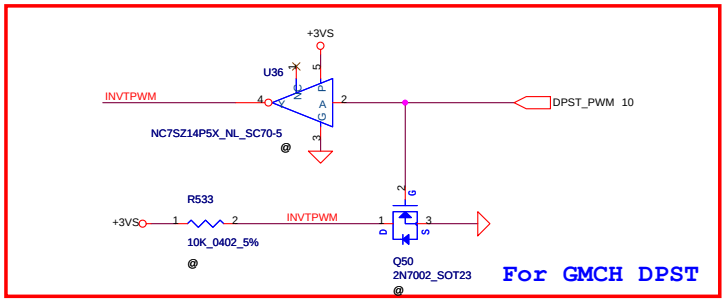

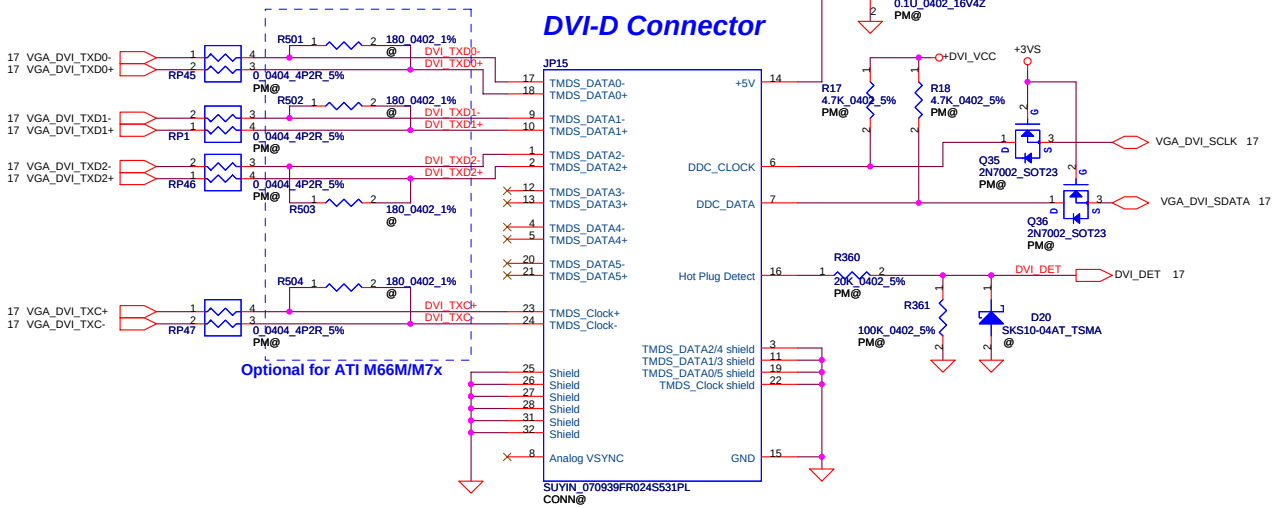

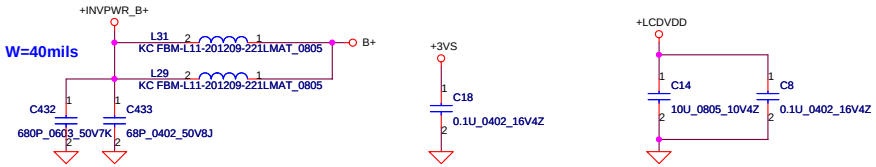

Security Classification	Compal Secret Data			Compal Electronics, Inc.
Issued Date	2006/12/25	Deciphered Date	2007/12/25	Title: LVDS & DVI Connector

THIS SHEET OF ENGINEERING DRAWING IS THE PROPRIETARY PROPERTY OF COMPAL ELECTRONICS, INC. AND CONTAINS CONFIDENTIAL AND TRADE SECRET INFORMATION. THIS SHEET MAY NOT BE TRANSFERED FROM THE CUSTODY OF THE COMPETENT DIVISION OF R&D DEPARTMENT EXCEPT AS AUTHORIZED BY COMPAL ELECTRONICS, INC. NEITHER THIS SHEET NOR THE INFORMATION IT CONTAINS MAY BE USED BY OR DISCLOSED TO ANY THIRD PARTY WITHOUT PRIOR WRITTEN CONSENT OF COMPAL ELECTRONICS, INC.

Size	Document Number	Rev
B	ICL50/ICK70 M/B LA-3551P Schematic	1.0

Date: Monday, April 23, 2007 Sheet 18 of 48

CRT Connector

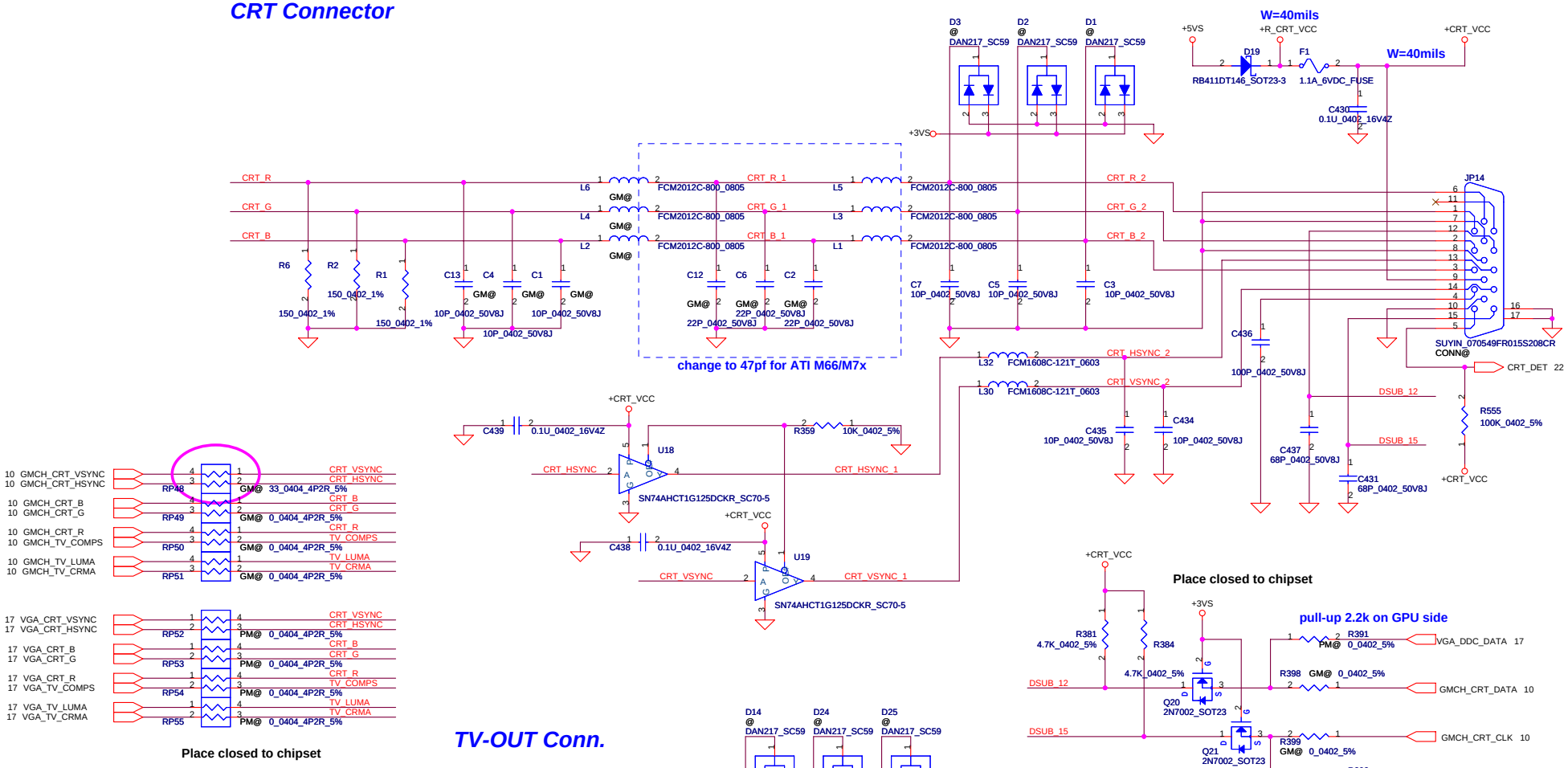

TV-OUT Conn.

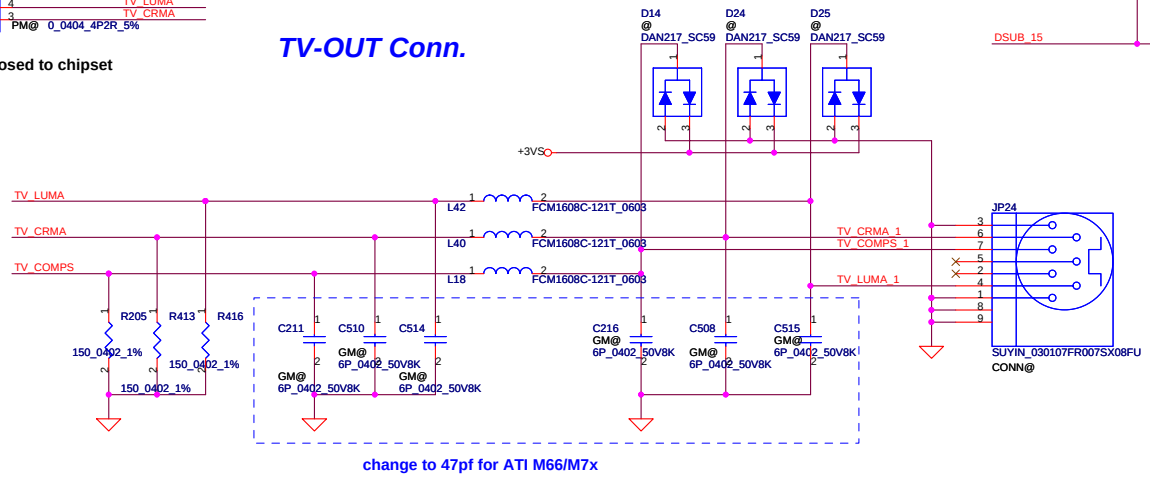

Security Classification	Compal Secret Data		
Issued Date	2006/12/25	Deciphered Date	2007/12/25

THIS SHEET OF ENGINEERING DRAWING IS THE PROPRIETARY PROPERTY OF COMPAL ELECTRONICS, INC. AND CONTAINS CONFIDENTIAL AND TRADE SECRET INFORMATION. THIS SHEET MAY NOT BE TRANSFERED FROM THE CUSTODY OF THE COMPETENT DIVISION OF R&D DEPARTMENT EXCEPT AS AUTHORIZED BY COMPAL ELECTRONICS, INC. NEITHER THIS SHEET NOR THE INFORMATION IT CONTAINS MAY BE USED BY OR DISCLOSED TO ANY THIRD PARTY WITHOUT PRIOR WRITTEN CONSENT OF COMPAL ELECTRONICS, INC.

Compal Electronics, Inc.

Title: CRT & TV-OUT Connector

Size: B | Document Number: ICL50/ICK70 M/B LA-3551P Schematic | Rev: 1.0

Date: Monday, April 23, 2007 | Sheet 19 of 48

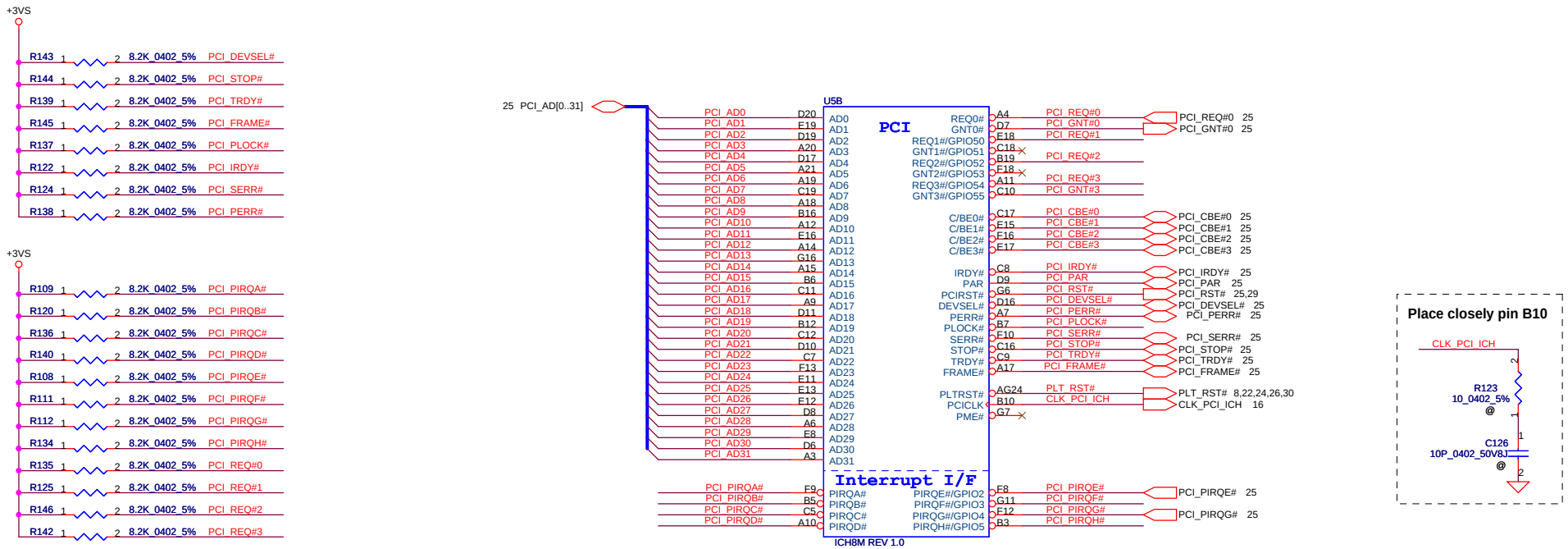

A16 Swap Override Strap	
PCI_GNT#3	Low= A16 swap override Enable High= Default*

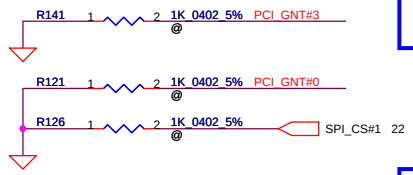

Boot BIOS Strap		
PCI_GNT#0	SPI_CS#1	Boot BIOS Loaction
0	1	SPI
1	0	PCI
1	1	LPC*

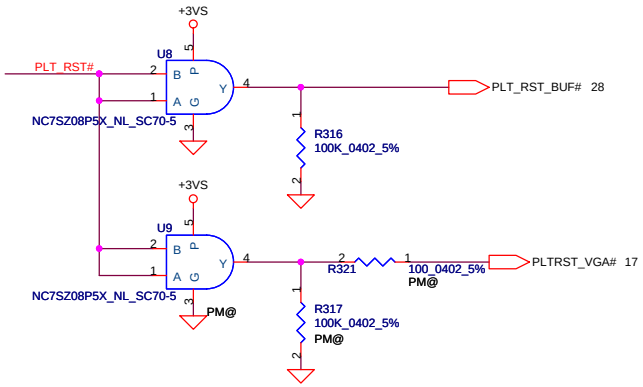

Security Classification	Compal Secret Data		
Issued Date	2006/12/25	Deciphered Date	2007/12/25

THIS SHEET OF ENGINEERING DRAWING IS THE PROPRIETARY PROPERTY OF COMPAL ELECTRONICS, INC. AND CONTAINS CONFIDENTIAL AND TRADE SECRET INFORMATION. THIS SHEET MAY NOT BE TRANSFERED FROM THE CUSTODY OF THE COMPETENT DIVISION OF R&D DEPARTMENT EXCEPT AS AUTHORIZED BY COMPAL ELECTRONICS, INC. NEITHER THIS SHEET NOR THE INFORMATION IT CONTAINS MAY BE USED BY OR DISCLOSED TO ANY THIRD PARTY WITHOUT PRIOR WRITTEN CONSENT OF COMPAL ELECTRONICS, INC.

Compal Electronics, Inc.

Title: ICH8M(1/4)-PCI

Size | Document Number: ICL50/ICK70 M/B LA-3551P Schematic | Rev: 1.0

Date: Monday, April 23, 2007 | Sheet 20 of 48

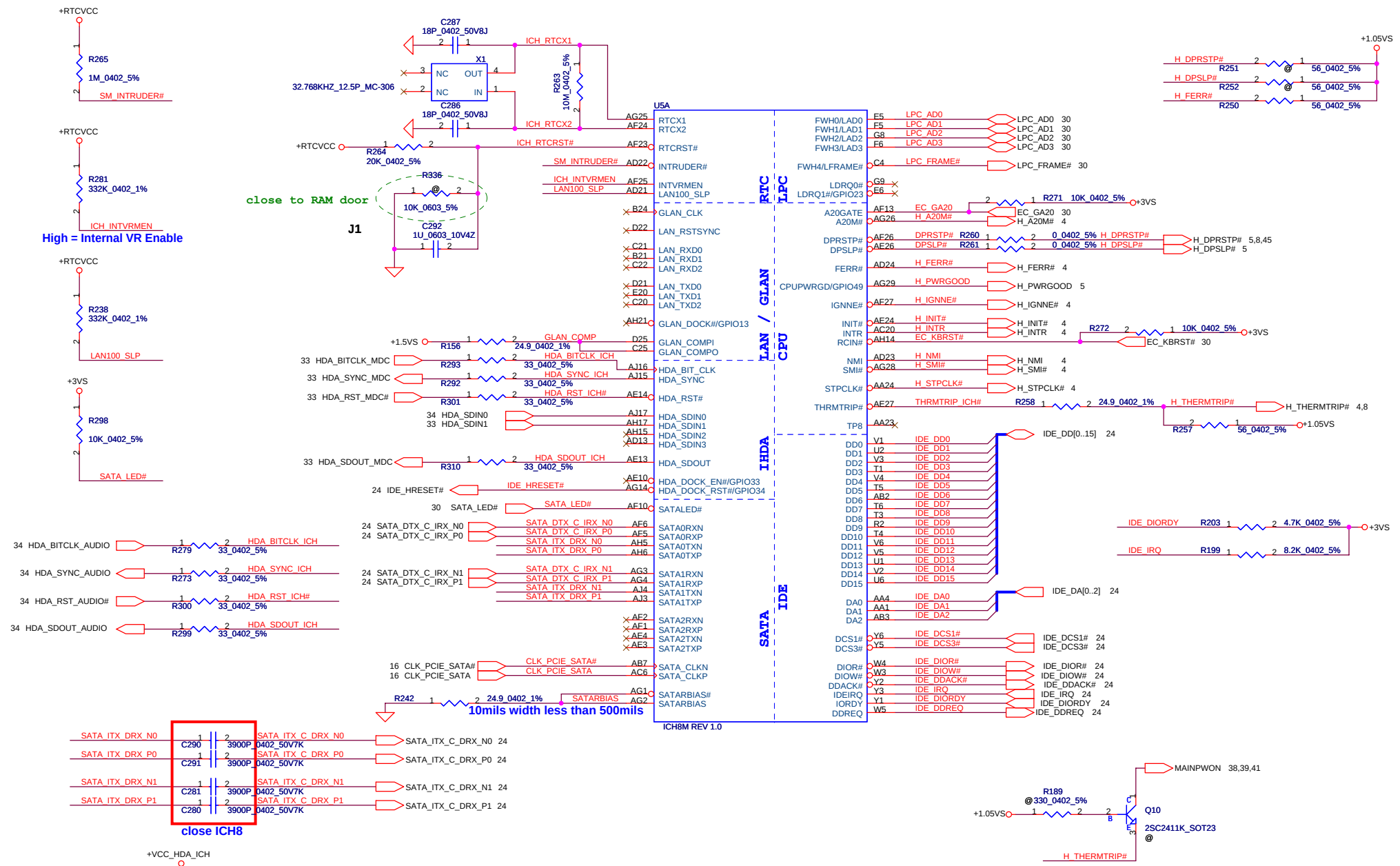

XOR Chain Entrance Strap

ICH_TP3	HDA_SDOUT	Description
0	0	RSVD
0	1	Enter XOR Chain
1	0	Normal Operation
1	1	Set PCIE port config bit 1

Security Classification	Compal Secret Data		
Issued Date	2006/12/25	Deciphered Date	2007/12/25

THIS SHEET OF ENGINEERING DRAWING IS THE PROPRIETARY PROPERTY OF COMPAL ELECTRONICS, INC. AND CONTAINS CONFIDENTIAL AND TRADE SECRET INFORMATION. THIS SHEET MAY NOT BE TRANSFERED FROM THE CUSTODY OF THE COMPETENT DIVISION OF R&D DEPARTMENT EXCEPT AS AUTHORIZED BY COMPAL ELECTRONICS, INC. NEITHER THIS SHEET NOR THE INFORMATION IT CONTAINS MAY BE USED BY OR DISCLOSED TO ANY THIRD PARTY WITHOUT PRIOR WRITTEN CONSENT OF COMPAL ELECTRONICS, INC.

Compal Electronics, Inc.

Title: ICH8M(2/4)-LAN,IDELPC,RTC

Size: B | Document Number: ICL50/ICK70 M/B LA-3551P Schematic | Rev: 1.0

Date: Monday, April 23, 2007 | Sheet 21 of 48

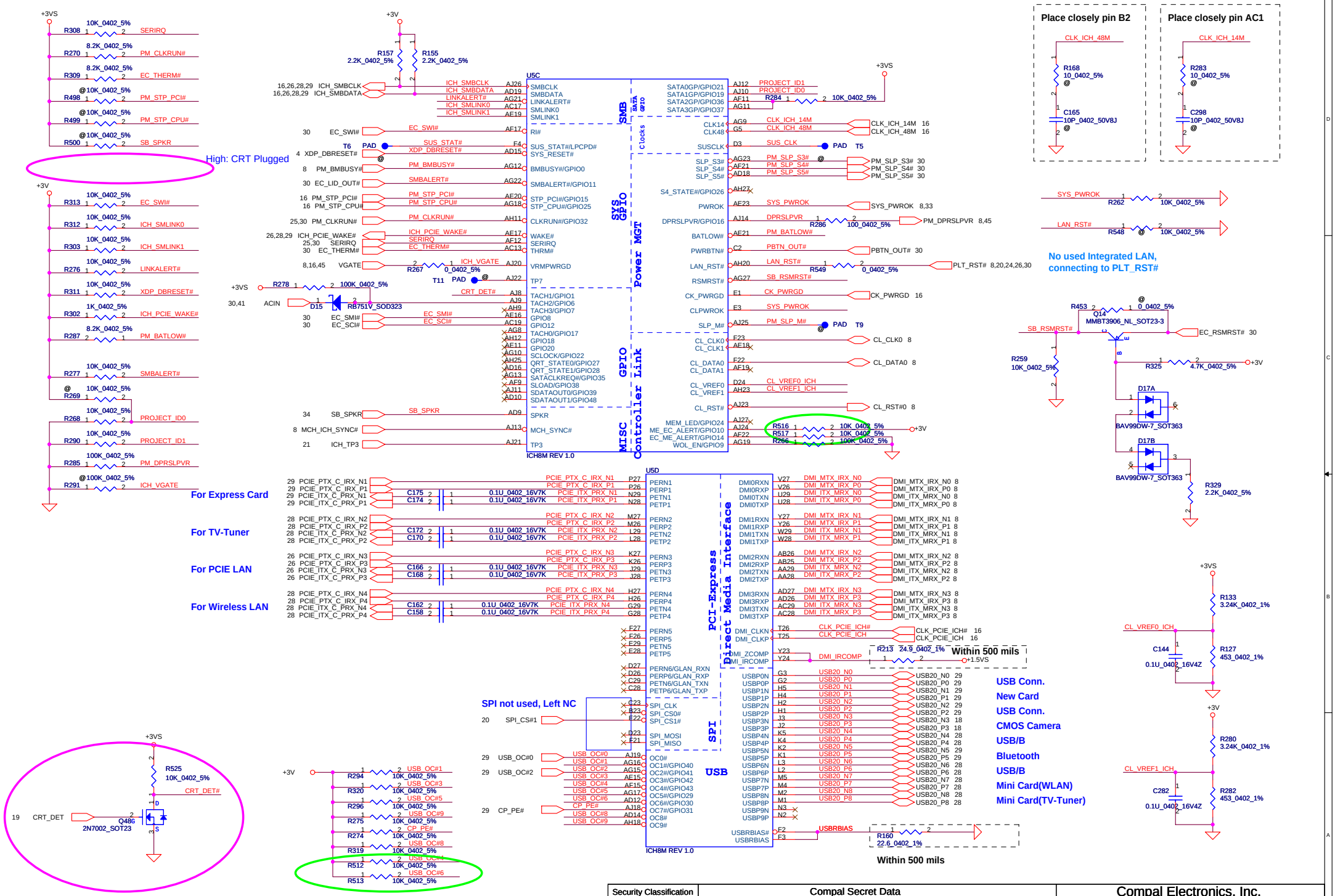

Security Classification	Compal Secret Data			Compal Electronics, Inc.
Issued Date	2006/12/25	Deciphered Date	2007/12/25	Title: ICH8M(3/4)-USB,GPIO,PCIE
				Size: Custom; Document Number: ICL50/ICK70 M/B LA-3551P Schematic; Rev: 1.0
				Date: Monday, April 23, 2007; Sheet 22 of 48

THIS SHEET OF ENGINEERING DRAWING IS THE PROPRIETARY PROPERTY OF COMPAL ELECTRONICS, INC. AND CONTAINS CONFIDENTIAL AND TRADE SECRET INFORMATION. THIS SHEET MAY NOT BE TRANSFERRED FROM THE CUSTODY OF THE COMPETENT DIVISION OF R&D DEPARTMENT EXCEPT AS AUTHORIZED BY COMPAL ELECTRONICS, INC. NEITHER THIS SHEET NOR THE INFORMATION IT CONTAINS MAY BE USED BY OR DISCLOSED TO ANY THIRD PARTY WITHOUT PRIOR WRITTEN CONSENT OF COMPAL ELECTRONICS, INC.

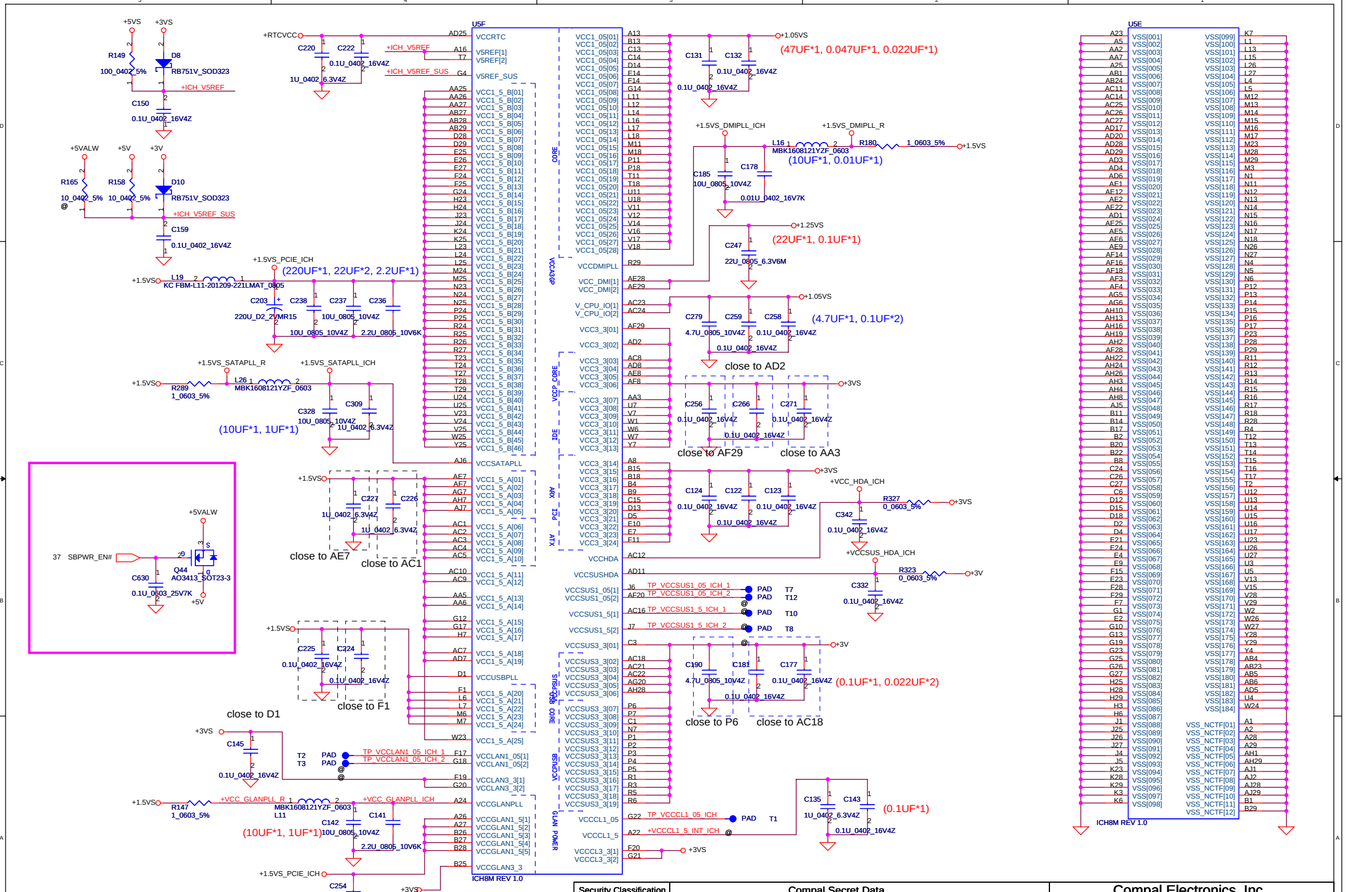

Security Classification	Compal Secret Data		
Issued Date	2006/12/25	Deciphered Date	2007/12/25

THIS SHEET OF ENGINEERING DRAWING IS THE PROPRIETARY PROPERTY OF COMPAL ELECTRONICS, INC. AND CONTAINS CONFIDENTIAL AND TRADE SECRET INFORMATION. THIS SHEET MAY NOT BE TRANSFERED FROM THE CUSTODY OF THE COMPETENT DIVISION OF R&D DEPARTMENT EXCEPT AS AUTHORIZED BY COMPAL ELECTRONICS, INC. NEITHER THIS SHEET NOR THE INFORMATION IT CONTAINS MAY BE USED BY OR DISCLOSED TO ANY THIRD PARTY WITHOUT PRIOR WRITTEN CONSENT OF COMPAL ELECTRONICS, INC.

Compal Electronics, Inc.

Title: ICH8M(4/4)-POWER&GND

Size: Custom | Document Number: ICL50/ICK70 M/B LA-3551P Schematic | Rev: 1.0

Date: Monday, April 23, 2007 | Sheet 23 of 48

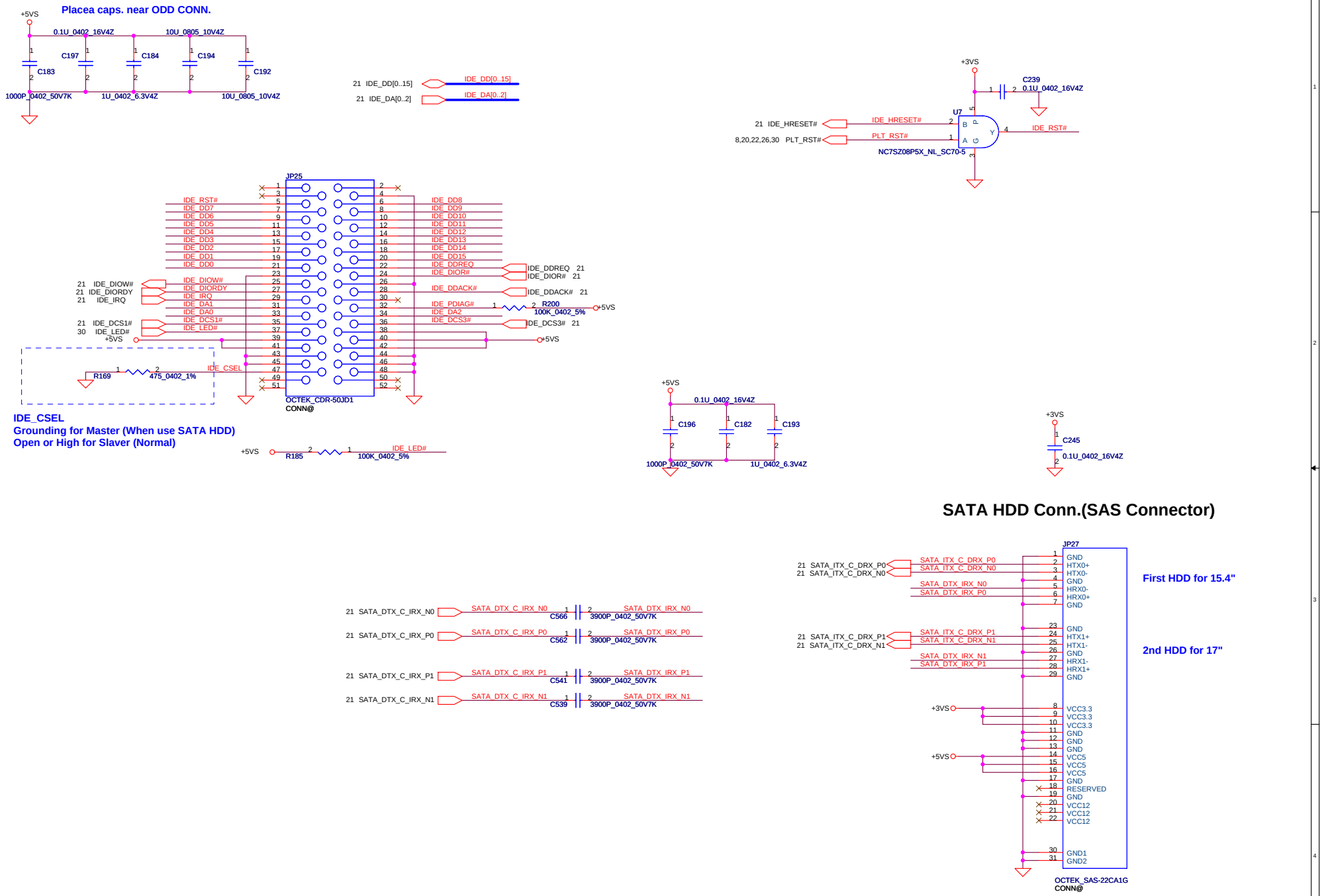

Security Classification	Compal Secret Data			Compal Electronics, Inc.
Issued Date	2006/12/25	Deciphered Date	2007/12/25	Title: HDD & ODD Connector
THIS SHEET OF ENGINEERING DRAWING IS THE PROPRIETARY PROPERTY OF COMPAL ELECTRONICS, INC. AND CONTAINS CONFIDENTIAL AND TRADE SECRET INFORMATION. THIS SHEET MAY NOT BE TRANSFERED FROM THE CUSTODY OF THE COMPETENT DIVISION OF R&D DEPARTMENT EXCEPT AS AUTHORIZED BY COMPAL ELECTRONICS, INC. NEITHER THIS SHEET NOR THE INFORMATION IT CONTAINS MAY BE USED BY OR DISCLOSED TO ANY THIRD PARTY WITHOUT PRIOR WRITTEN CONSENT OF COMPAL ELECTRONICS, INC.				Size: B; Document Number: ICL50/ICK70 M/B LA-3551P Schematic; Rev: 1.0
				Date: Monday, April 23, 2007; Sheet 24 of 48

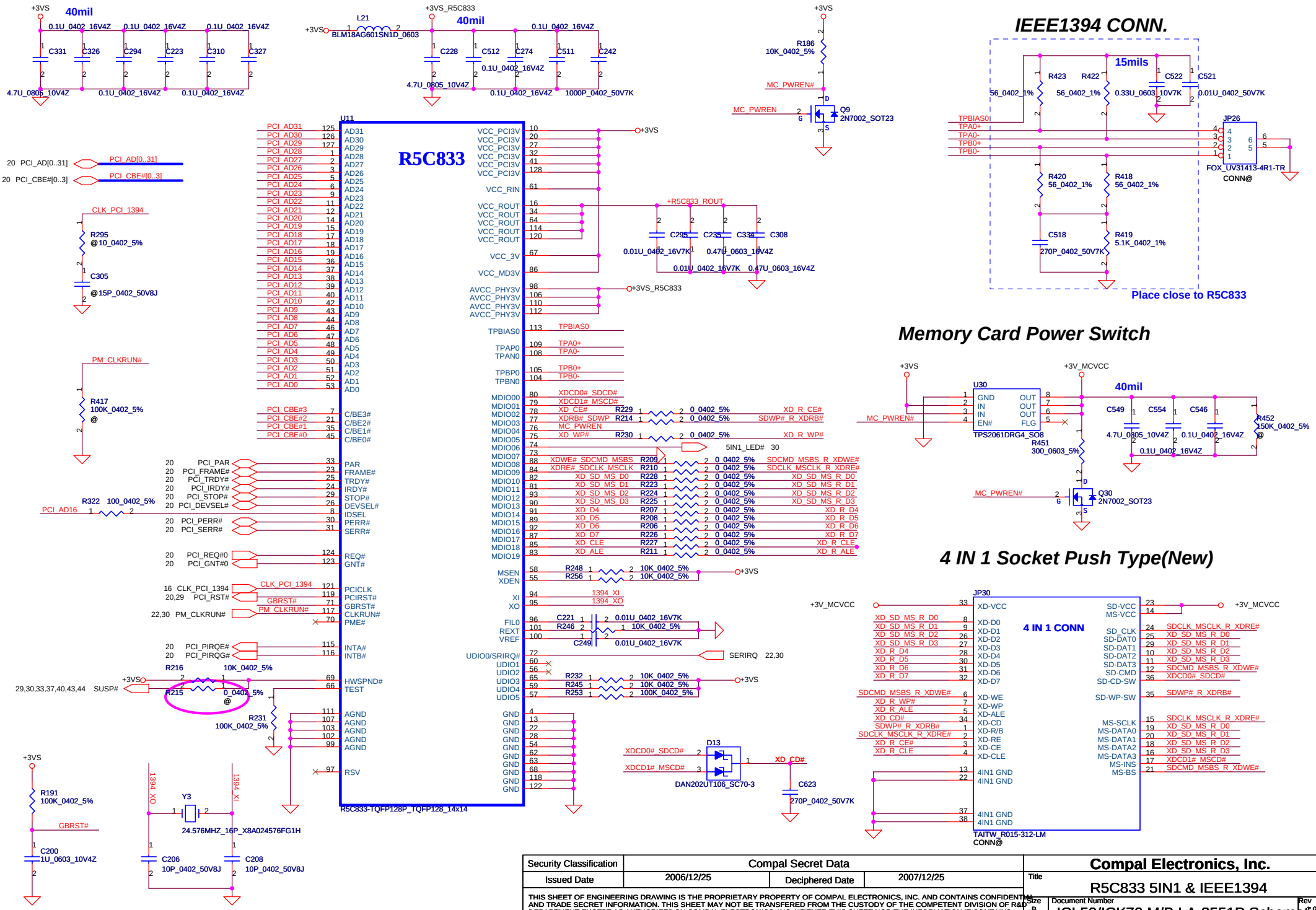

Security Classification	Compal Secret Data		
Issued Date	2006/12/25	Deciphered Date	2007/12/25

THIS SHEET OF ENGINEERING DRAWING IS THE PROPRIETARY PROPERTY OF COMPAL ELECTRONICS, INC. AND CONTAINS CONFIDENTIAL AND TRADE SECRET INFORMATION. THIS SHEET MAY NOT BE TRANSFERED FROM THE CUSTODY OF THE COMPETENT DIVISION OF R&D DEPARTMENT EXCEPT AS AUTHORIZED BY COMPAL ELECTRONICS, INC. NEITHER THIS SHEET NOR THE INFORMATION IT CONTAINS MAY BE USED BY OR DISCLOSED TO ANY THIRD PARTY WITHOUT PRIOR WRITTEN CONSENT OF COMPAL ELECTRONICS, INC.

Compal Electronics, Inc.

Title: R5C833 5IN1 & IEEE1394

Size: B | Document Number: ICL50/ICK70 M/B LA-3551P Schematic | Rev: 1.0

Date: Monday, April 23, 2007 | Sheet 25 of 48

LAN BCM5787M

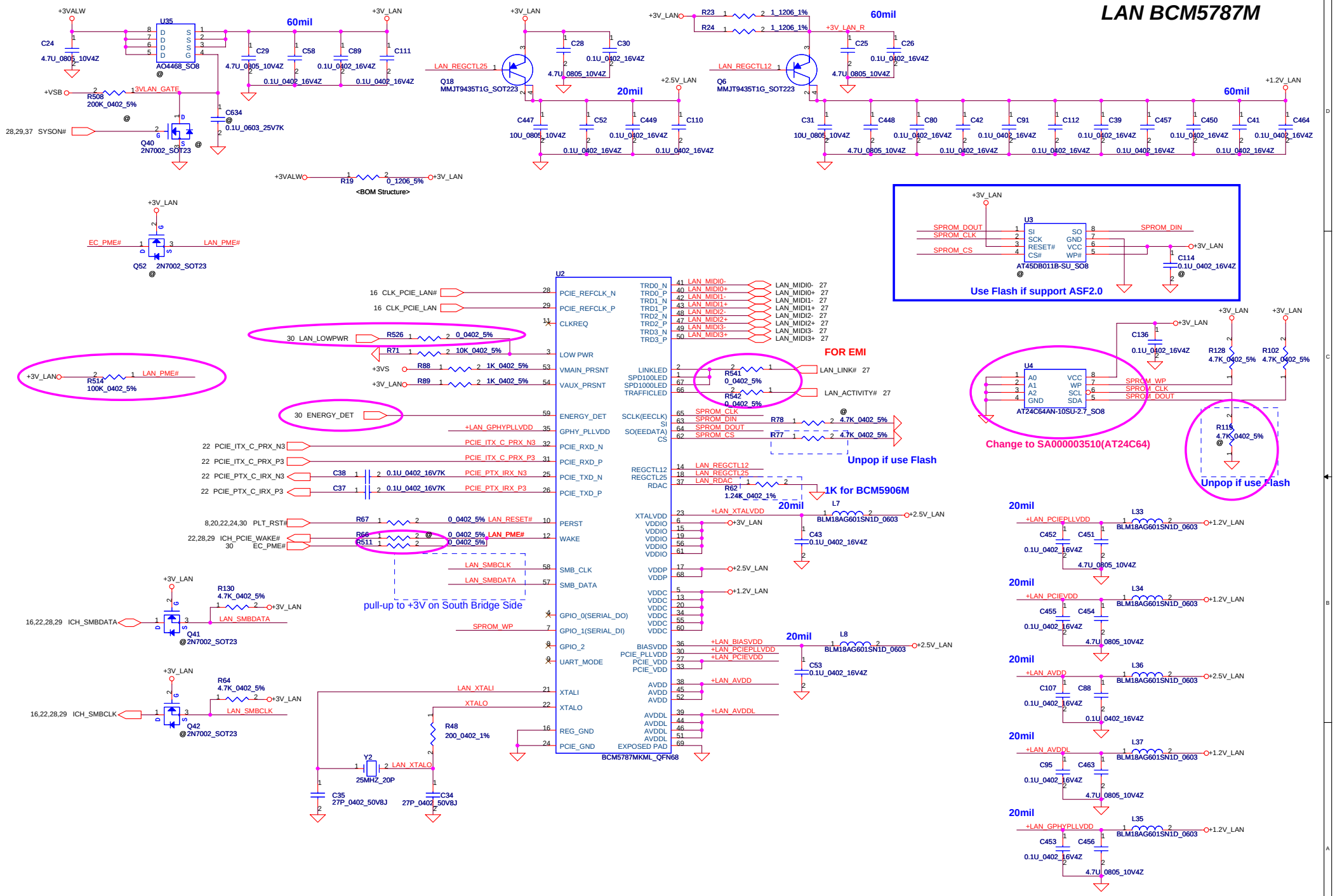

Security Classification	Compal Secret Data		
Issued Date	2006/12/25	Deciphered Date	2007/12/25

THIS SHEET OF ENGINEERING DRAWING IS THE PROPRIETARY PROPERTY OF COMPAL ELECTRONICS, INC. AND CONTAINS CONFIDENTIAL AND TRADE SECRET INFORMATION. THIS SHEET MAY NOT BE TRANSFERED FROM THE CUSTODY OF THE COMPETENT DIVISION OF R&D DEPARTMENT EXCEPT AS AUTHORIZED BY COMPAL ELECTRONICS, INC. NEITHER THIS SHEET NOR THE INFORMATION IT CONTAINS MAY BE USED BY OR DISCLOSED TO ANY THIRD PARTY WITHOUT PRIOR WRITTEN CONSENT OF COMPAL ELECTRONICS, INC.

Compal Electronics, Inc.

Title: LAN BCM5787M

Size: B | Document Number: ICL50/ICK70 M/B LA-3551P Schematic | Rev: 1.0

Date: Monday, April 23, 2007 | Sheet 26 of 48

LAN BCM5787M

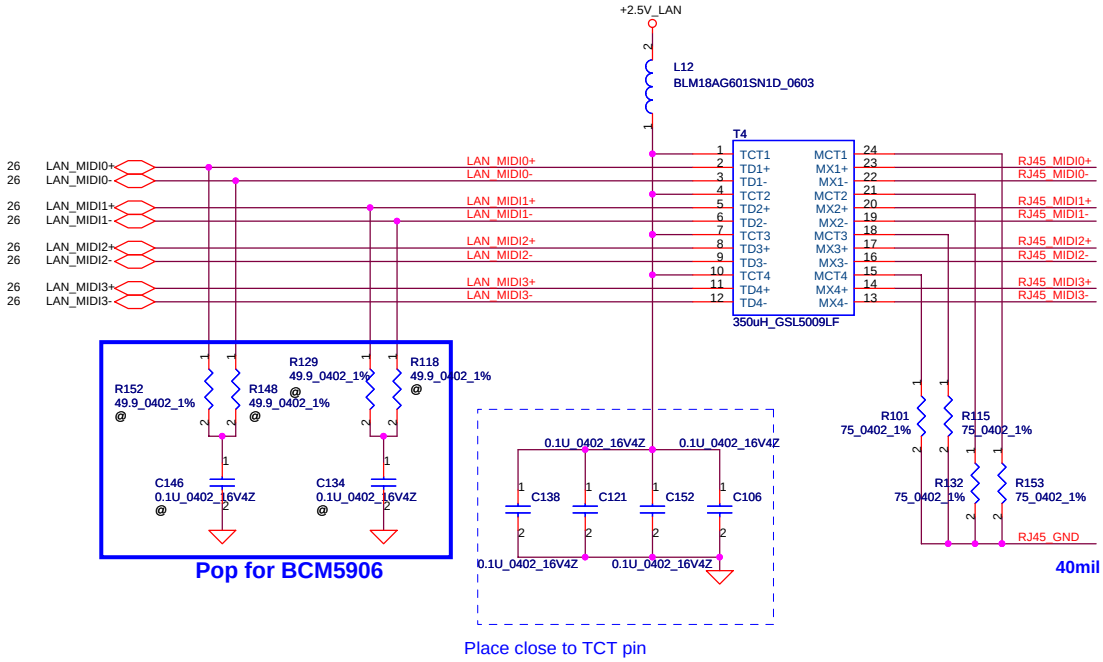

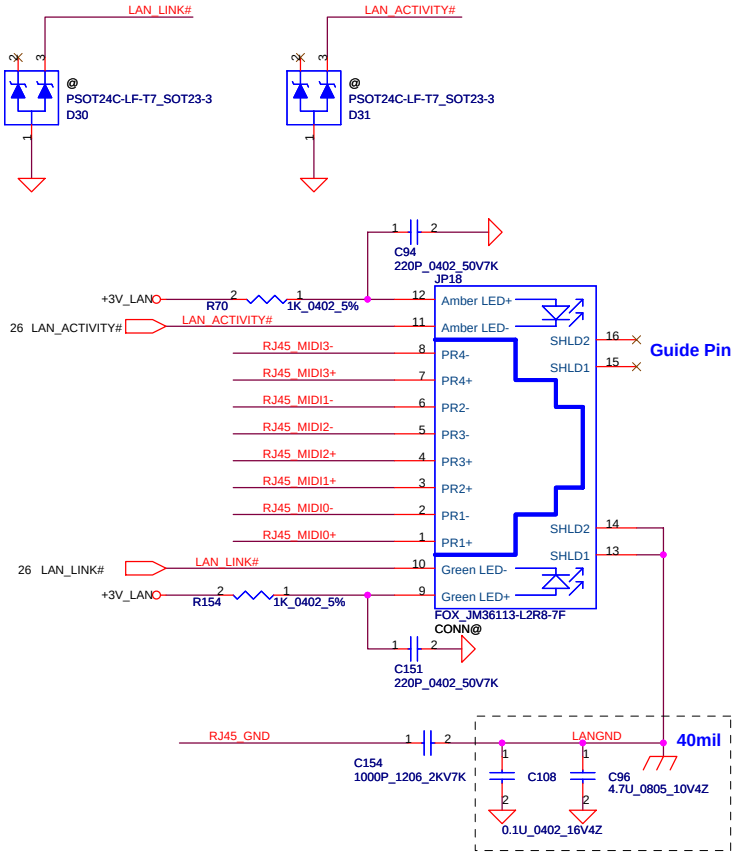

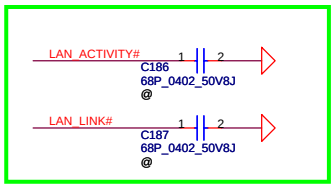

For EMI

Security Classification	Compal Secret Data			Compal Electronics, Inc.
Issued Date	2006/12/25	Deciphered Date	2007/12/25	Title: LAN Magnetic & RJ45/RJ11
				Size: B; Document Number: ICL50/ICK70 M/B LA-3551P Schematic; Rev: 0.0
				Date: Monday, April 23, 2007; Sheet 27 of 48

THIS SHEET OF ENGINEERING DRAWING IS THE PROPRIETARY PROPERTY OF COMPAL ELECTRONICS, INC. AND CONTAINS CONFIDENTIAL AND TRADE SECRET INFORMATION. THIS SHEET MAY NOT BE TRANSFERED FROM THE CUSTODY OF THE COMPETENT DIVISION OF R&D DEPARTMENT EXCEPT AS AUTHORIZED BY COMPAL ELECTRONICS, INC. NEITHER THIS SHEET NOR THE INFORMATION IT CONTAINS MAY BE USED BY OR DISCLOSED TO ANY THIRD PARTY WITHOUT PRIOR WRITTEN CONSENT OF COMPAL ELECTRONICS, INC.

For Wireless LAN

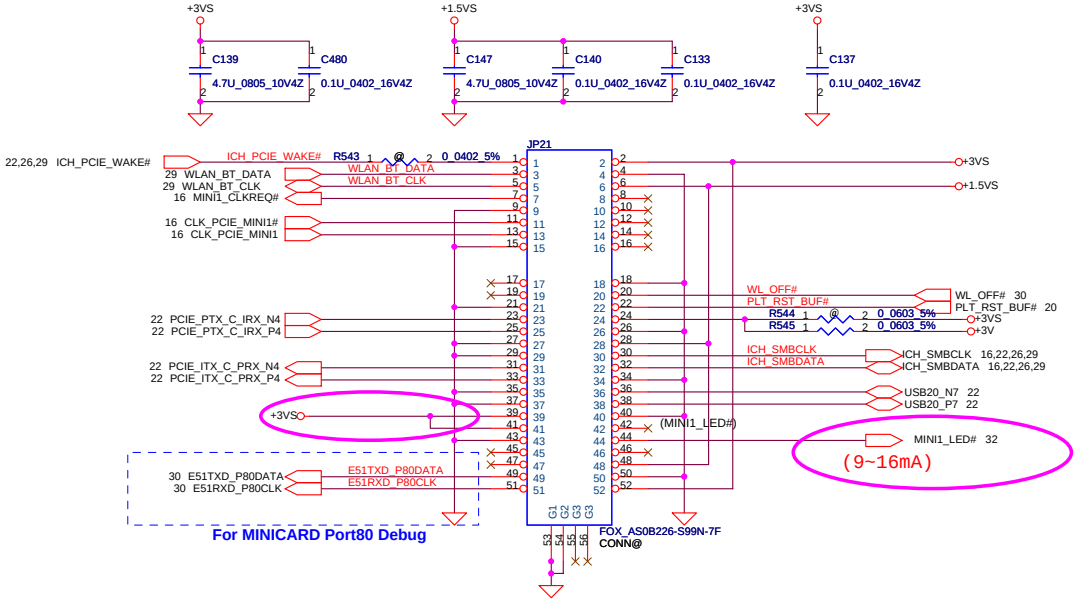

For TV-Tuner/HW MPEG

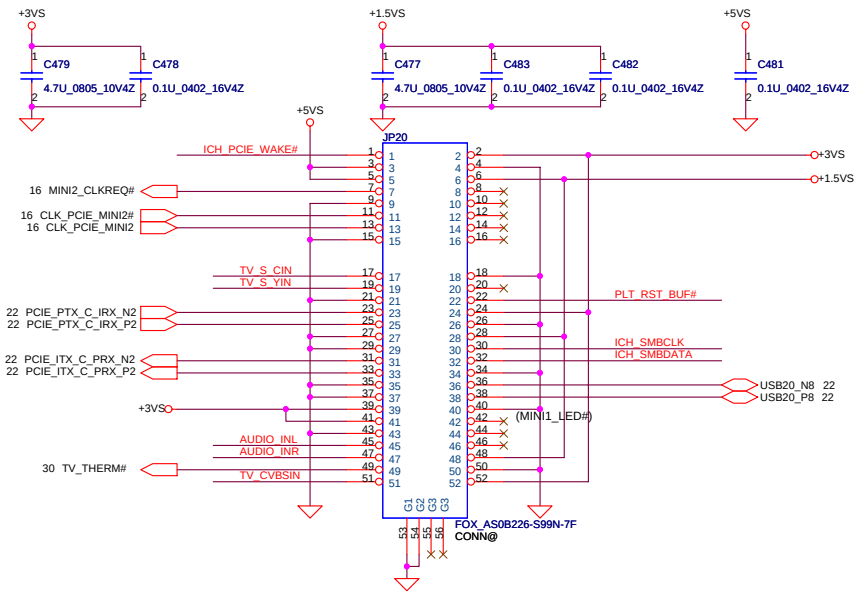

Mini Card Power Rating			
Power	Primary Power (mA)		Auxiliary Power (mA)
	Peak	Normal	Normal
+3VS	1000	750	
+3V	330	250	250 (wake enable)
+1.5VS	500	375	5 (Not wake enable)

To USB/B Connector

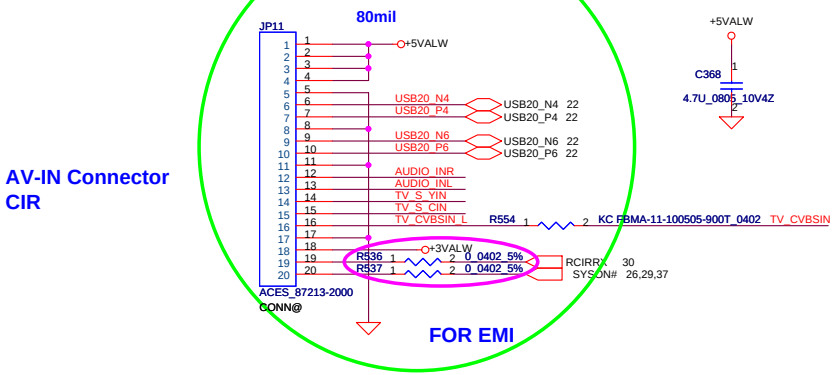

Security Classification	Compal Secret Data		
Issued Date	2006/12/25	Deciphered Date	2007/12/25

THIS SHEET OF ENGINEERING DRAWING IS THE PROPRIETARY PROPERTY OF COMPAL ELECTRONICS, INC. AND CONTAINS CONFIDENTIAL AND TRADE SECRET INFORMATION. THIS SHEET MAY NOT BE TRANSFERED FROM THE CUSTODY OF THE COMPETENT DIVISION OF R&D DEPARTMENT EXCEPT AS AUTHORIZED BY COMPAL ELECTRONICS, INC. NEITHER THIS SHEET NOR THE INFORMATION IT CONTAINS MAY BE USED BY OR DISCLOSED TO ANY THIRD PARTY WITHOUT PRIOR WRITTEN CONSENT OF COMPAL ELECTRONICS, INC.

Compal Electronics, Inc.

Title: MINI CARD (WLAN & TV-Tuner)

Size: B | Document Number: ICL50/ICK70 M/B LA-3551P Schematic | Rev: 1.0

Date: Monday, April 23, 2007 | Sheet 28 of 48

New Card Power Switch

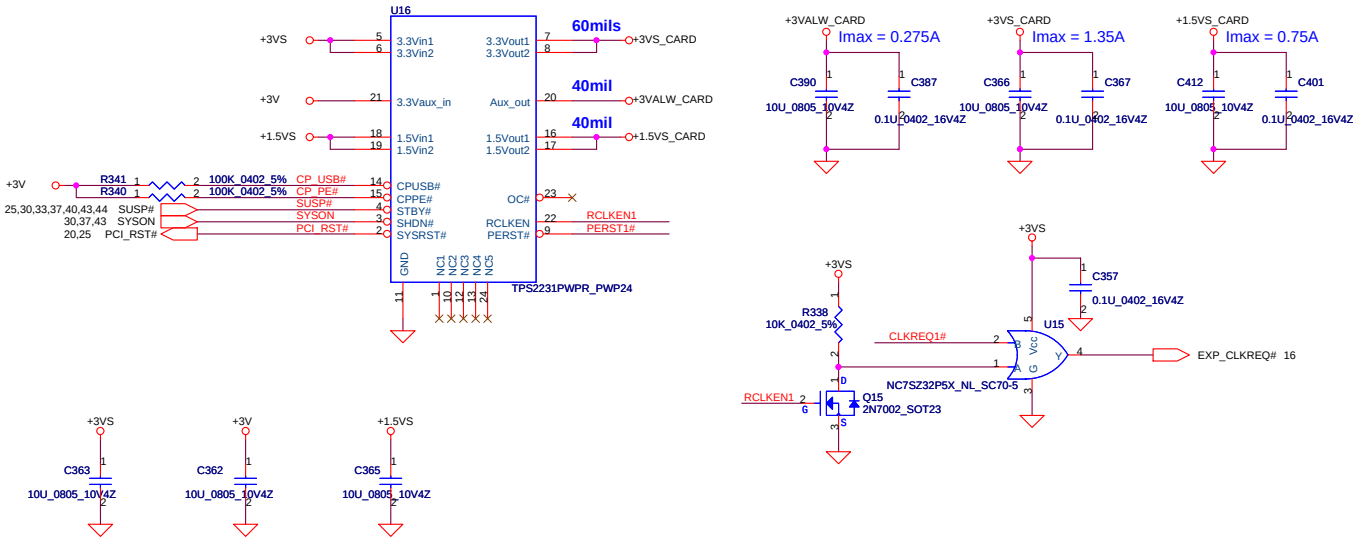

New Card Socket (Left/TOP)

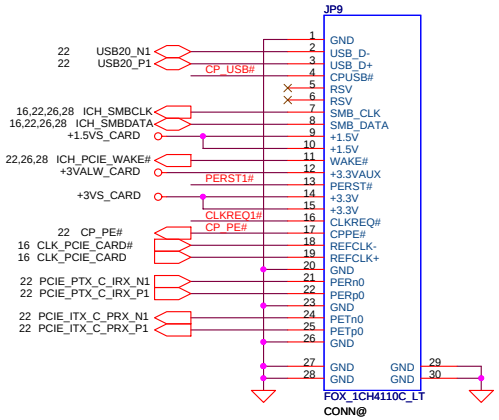

Bluetooth Conn.

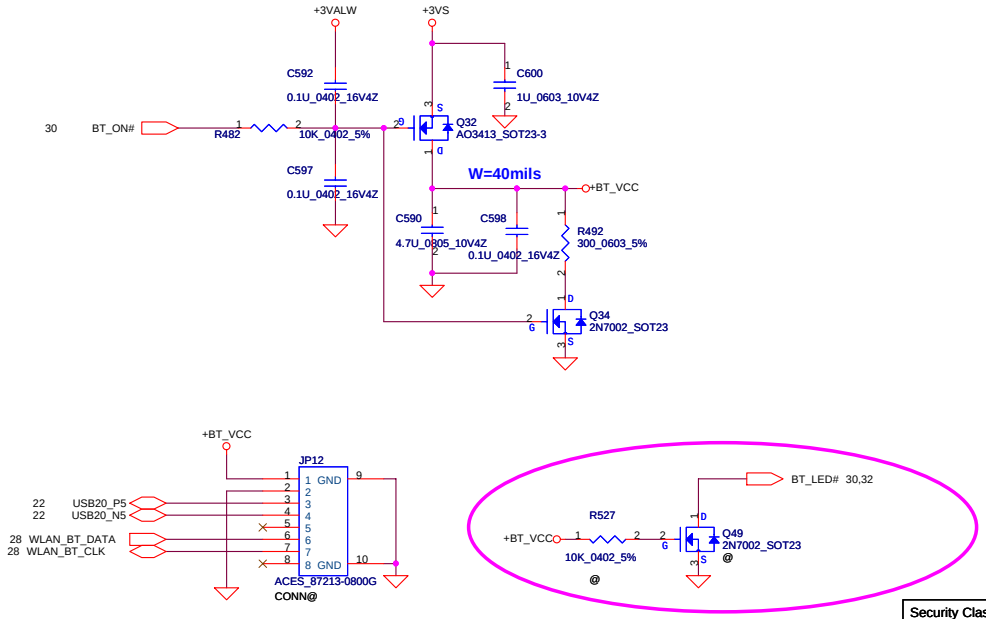

USB CONN. (Stack-up Type)

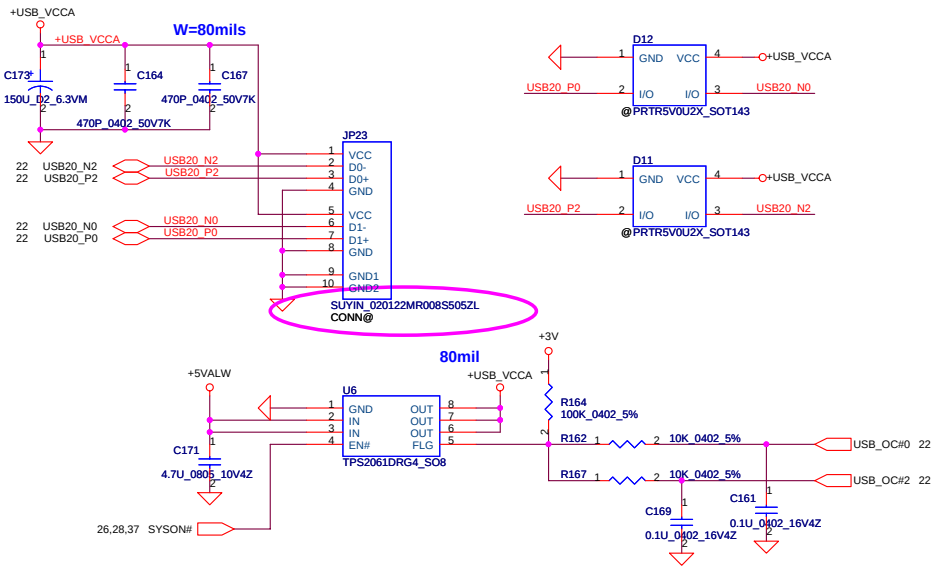

Security Classification	Compal Secret Data			Compal Electronics, Inc.
Issued Date	2006/12/25	Deciphered Date	2007/12/25	Title: NEW CARD & USB Connector
THIS SHEET OF ENGINEERING DRAWING IS THE PROPRIETARY PROPERTY OF COMPAL ELECTRONICS, INC. AND CONTAINS CONFIDENTIAL AND TRADE SECRET INFORMATION. THIS SHEET MAY NOT BE TRANSFERED FROM THE CUSTODY OF THE COMPETENT DIVISION OF R&D DEPARTMENT EXCEPT AS AUTHORIZED BY COMPAL ELECTRONICS, INC. NEITHER THIS SHEET NOR THE INFORMATION IT CONTAINS MAY BE USED BY OR DISCLOSED TO ANY THIRD PARTY WITHOUT PRIOR WRITTEN CONSENT OF COMPAL ELECTRONICS, INC.				Size: B; Document Number: ICL50/ICK70 M/B LA-3551P Schematic; Rev: 1.0
				Date: Monday, April 23, 2007; Sheet 29 of 48

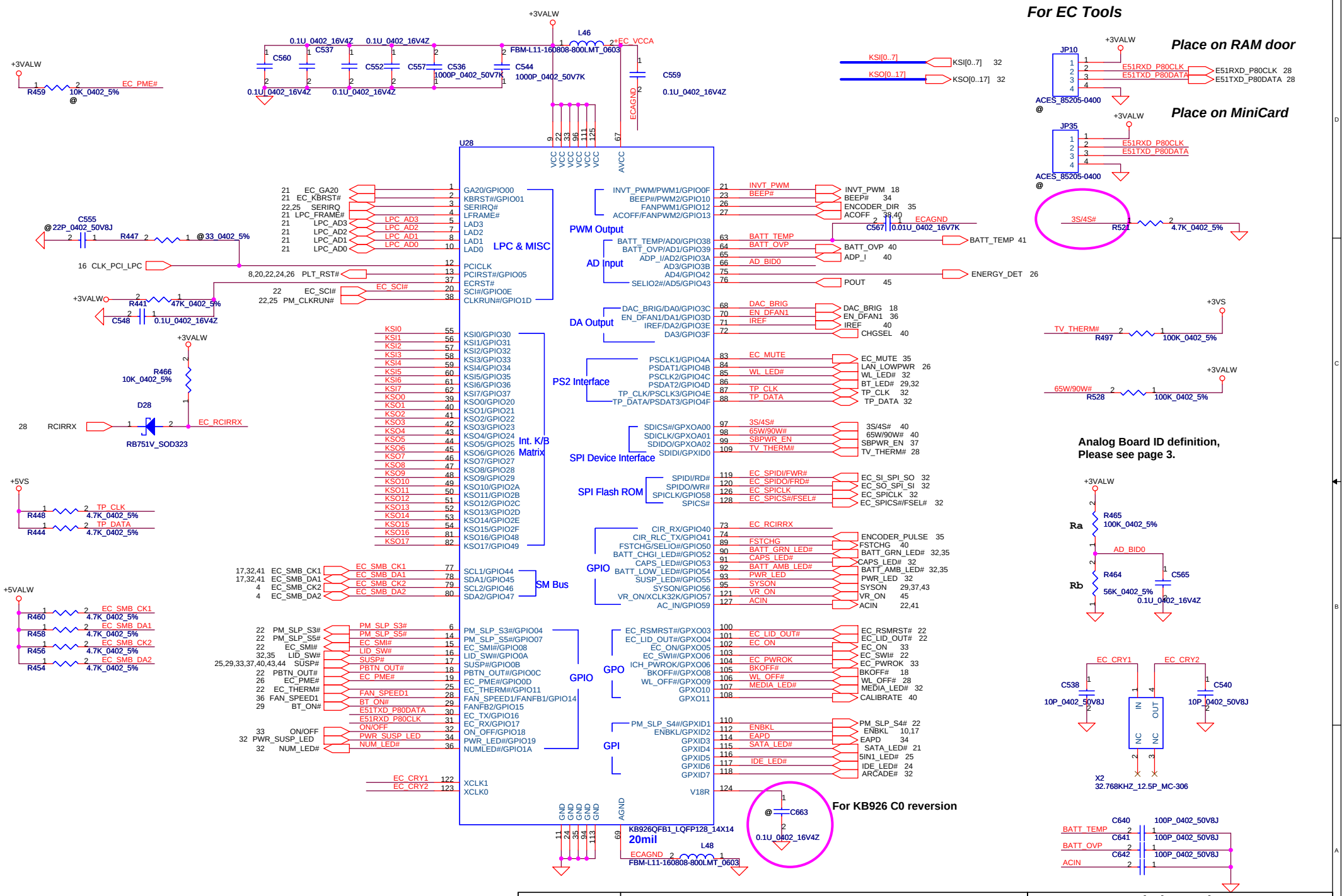

THIS SHEET OF ENGINEERING DRAWING IS THE PROPRIETARY PROPERTY OF COMPAL ELECTRONICS, INC. AND CONTAINS CONFIDENTIAL AND TRADE SECRET INFORMATION. THIS SHEET MAY NOT BE TRANSFERED FROM THE CUSTODY OF THE COMPETENT DIVISION OF R&D DEPARTMENT EXCEPT AS AUTHORIZED BY COMPAL ELECTRONICS, INC. NEITHER THIS SHEET NOR THE INFORMATION IT CONTAINS MAY BE USED BY OR DISCLOSED TO ANY THIRD PARTY WITHOUT PRIOR WRITTEN CONSENT OF COMPAL ELECTRONICS, INC.

Security Classification	Compal Secret Data		
Issued Date	2006/12/25	Deciphered Date	2007/12/25

THIS SHEET OF ENGINEERING DRAWING IS THE PROPRIETARY PROPERTY OF COMPAL ELECTRONICS, INC. AND CONTAINS CONFIDENTIAL AND TRADE SECRET INFORMATION. THIS SHEET MAY NOT BE TRANSFERED FROM THE CUSTODY OF THE COMPETENT DIVISION OF R&D DEPARTMENT EXCEPT AS AUTHORIZED BY COMPAL ELECTRONICS, INC. NEITHER THIS SHEET NOR THE INFORMATION IT CONTAINS MAY BE USED BY OR DISCLOSED TO ANY THIRD PARTY WITHOUT PRIOR WRITTEN CONSENT OF COMPAL ELECTRONICS, INC.

Compal Electronics, Inc.

Title: EC ENE KB925(Reserved)

Size: B | Document Number: ICL50/ICK70 M/B LA-3551P Schematic | Rev: 1.0

Date: Thursday, April 19, 2007 | Sheet 31 of 48

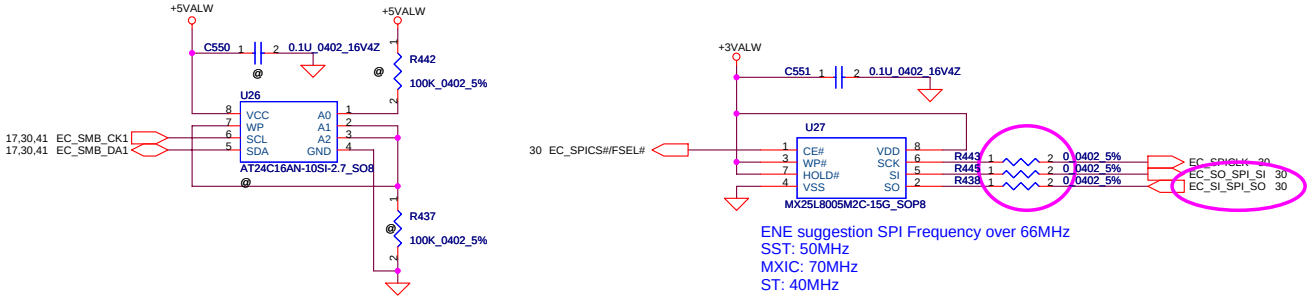

ENE suggestion SPI Frequency over 66MHz
SST: 50MHz
MXIC: 70MHz
ST: 40MHz

To TP/B Conn.

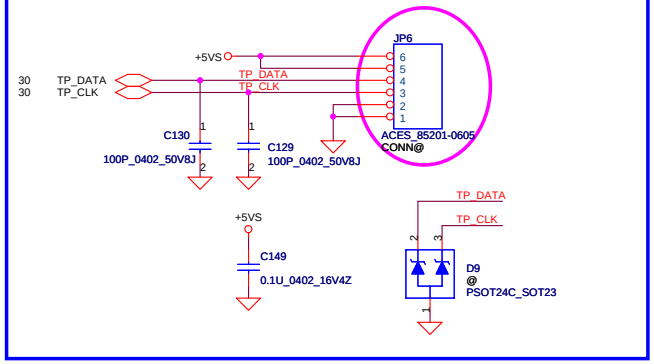

INT_KBD Conn.

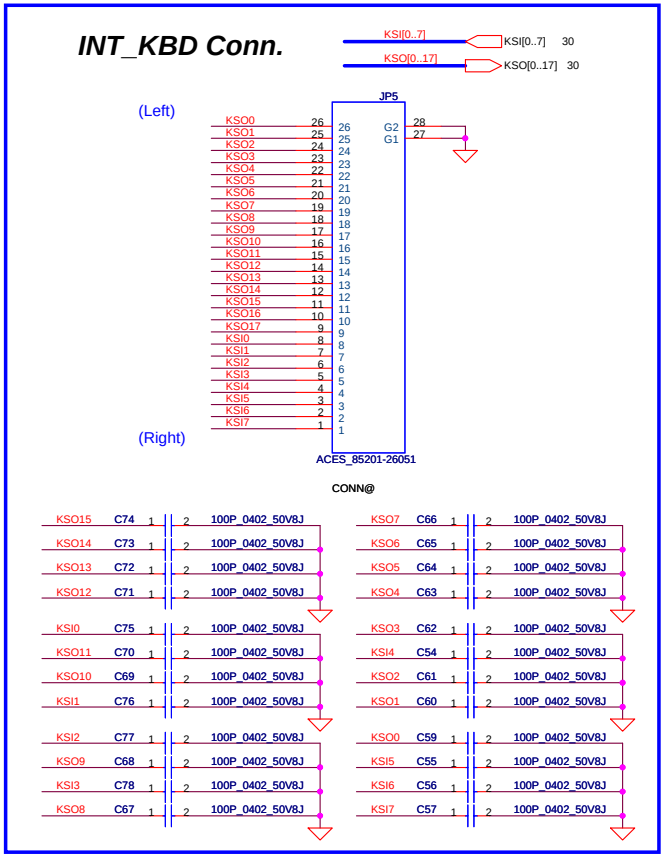

To BTN/B Conn.

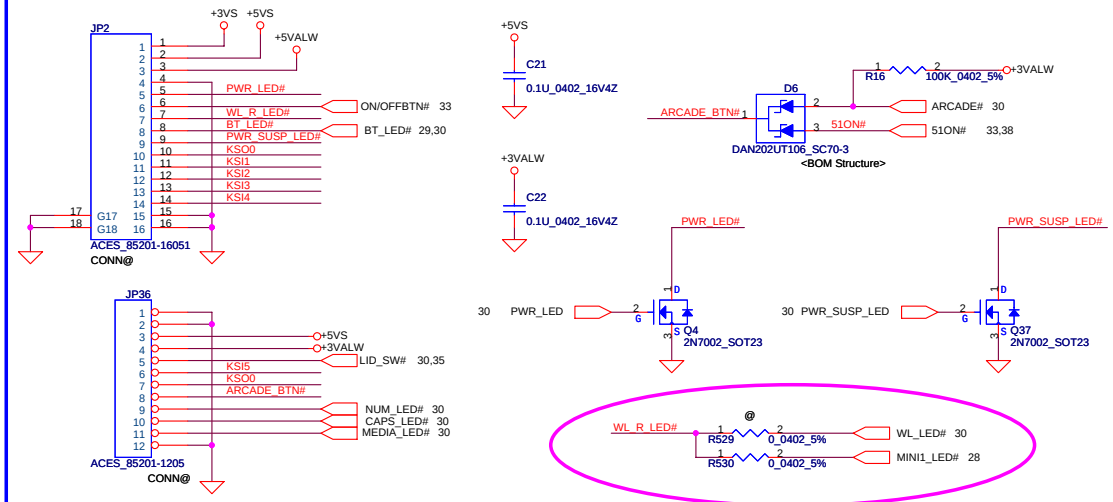

FOR EMI

	KSO0
KSI1	WL_BTN#
KSI2	BT_BTN#
KSI3	EMAIL_BTN#
KSI4	IE_BTN#
KSI5	E-KEY_BTN#

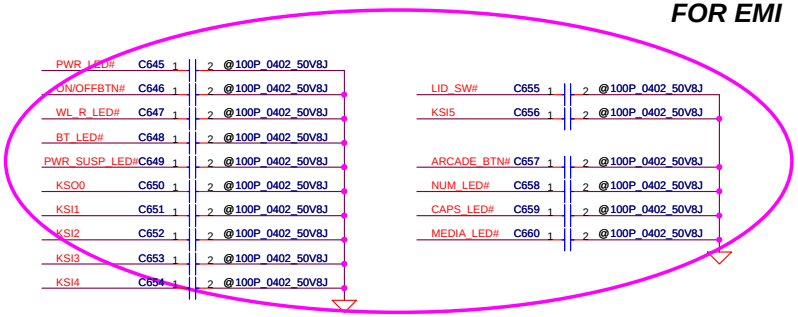

Compal Footprint

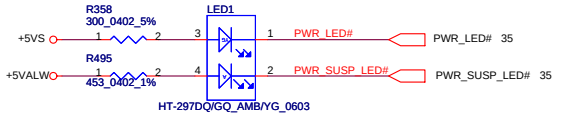

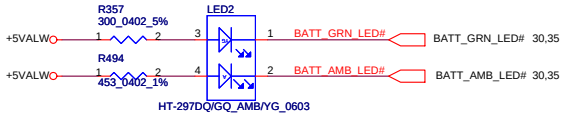

Security Classification	Compal Secret Data		
Issued Date	2006/12/25	Deciphered Date	2007/12/25

THIS SHEET OF ENGINEERING DRAWING IS THE PROPRIETARY PROPERTY OF COMPAL ELECTRONICS, INC. AND CONTAINS CONFIDENTIAL AND TRADE SECRET INFORMATION. THIS SHEET MAY NOT BE TRANSFERED FROM THE CUSTODY OF THE COMPETENT DIVISION OF R&D DEPARTMENT EXCEPT AS AUTHORIZED BY COMPAL ELECTRONICS, INC. NEITHER THIS SHEET NOR THE INFORMATION IT CONTAINS MAY BE USED BY OR DISCLOSED TO ANY THIRD PARTY WITHOUT PRIOR WRITTEN CONSENT OF COMPAL ELECTRONICS, INC.

Compal Electronics, Inc.

Title: BIOS, I/O Port & K/B Connector

Size: B | Document Number: ICL50/ICK70 M/B LA-3551P Schematic | Rev: 1.0

Date: Monday, April 23, 2007 | Sheet 32 of 48

Power Button

ON/OFF switch

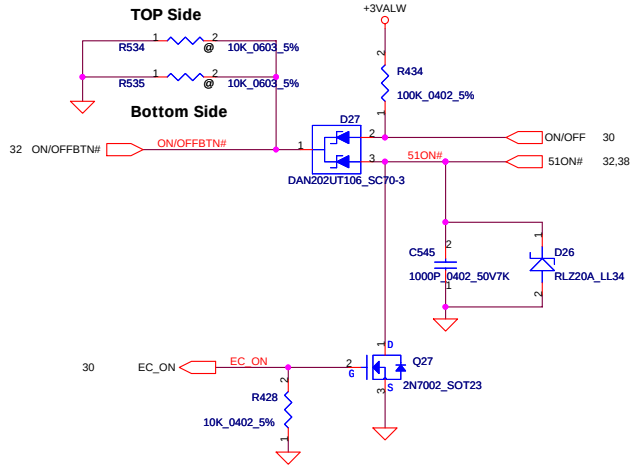

HDA MDC Conn.

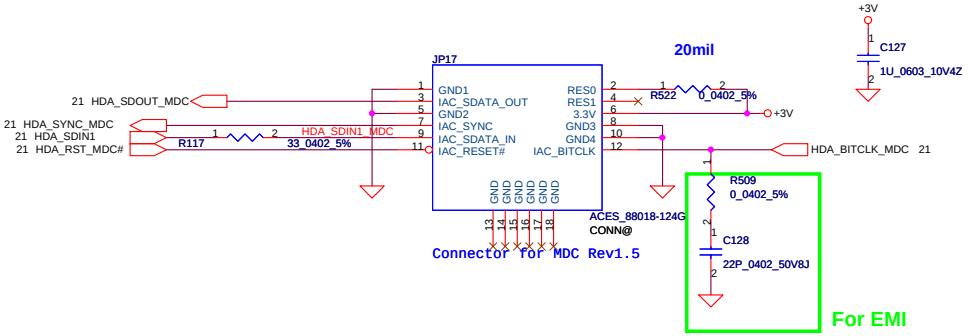

Power ON Circuit

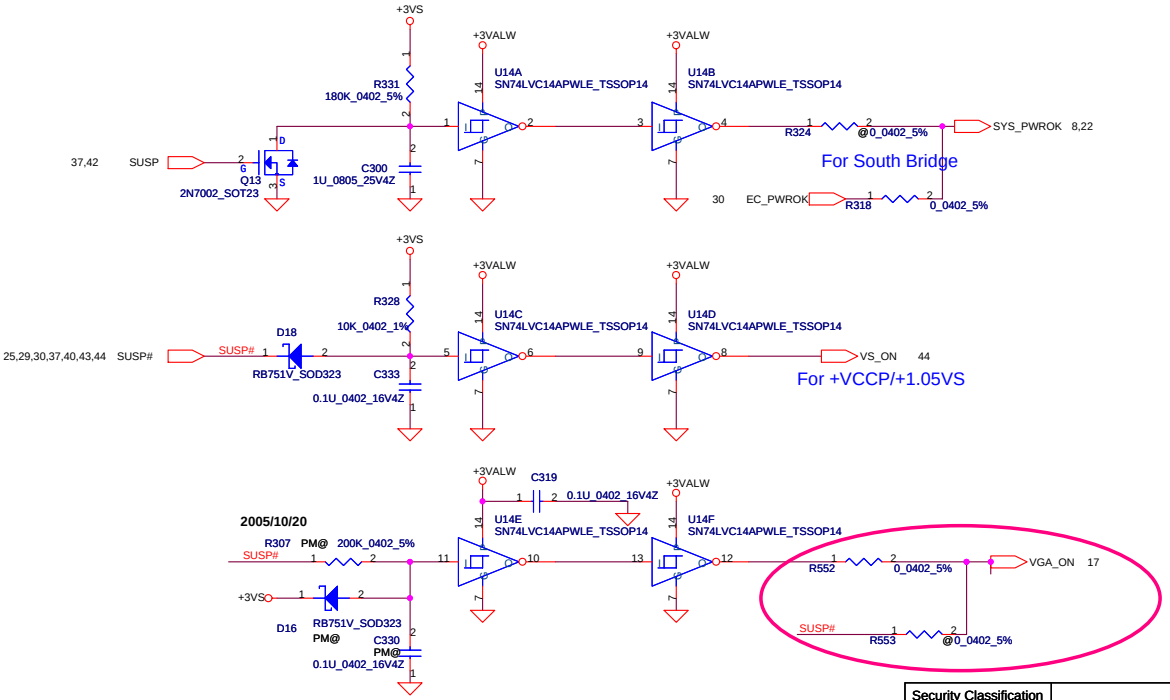

RTC Battery

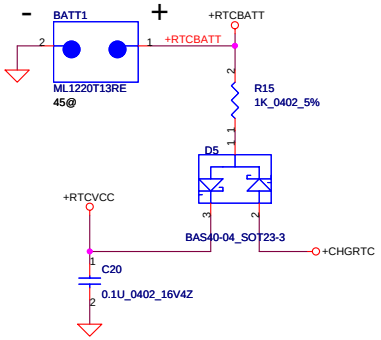

Change BATT1 P/N : SP093PA0200 (Panasonic)
SP093MX0000 (MAXELL)

Security Classification	Compal Secret Data		
Issued Date	2006/12/25	Deciphered Date	2007/12/25

THIS SHEET OF ENGINEERING DRAWING IS THE PROPRIETARY PROPERTY OF COMPAL ELECTRONICS, INC. AND CONTAINS CONFIDENTIAL AND TRADE SECRET INFORMATION. THIS SHEET MAY NOT BE TRANSFERED FROM THE CUSTODY OF THE COMPETENT DIVISION OF R&D DEPARTMENT EXCEPT AS AUTHORIZED BY COMPAL ELECTRONICS, INC. NEITHER THIS SHEET NOR THE INFORMATION IT CONTAINS MAY BE USED BY OR DISCLOSED TO ANY THIRD PARTY WITHOUT PRIOR WRITTEN CONSENT OF COMPAL ELECTRONICS, INC.

Compal Electronics, Inc.

Title: Power OK, Reset and RTC Circuit, TP

Size: B | Document Number: ICL50/ICK70 M/B LA-3551P Schematic | Rev: 1.0

Date: Monday, April 23, 2007 | Sheet 33 of 48

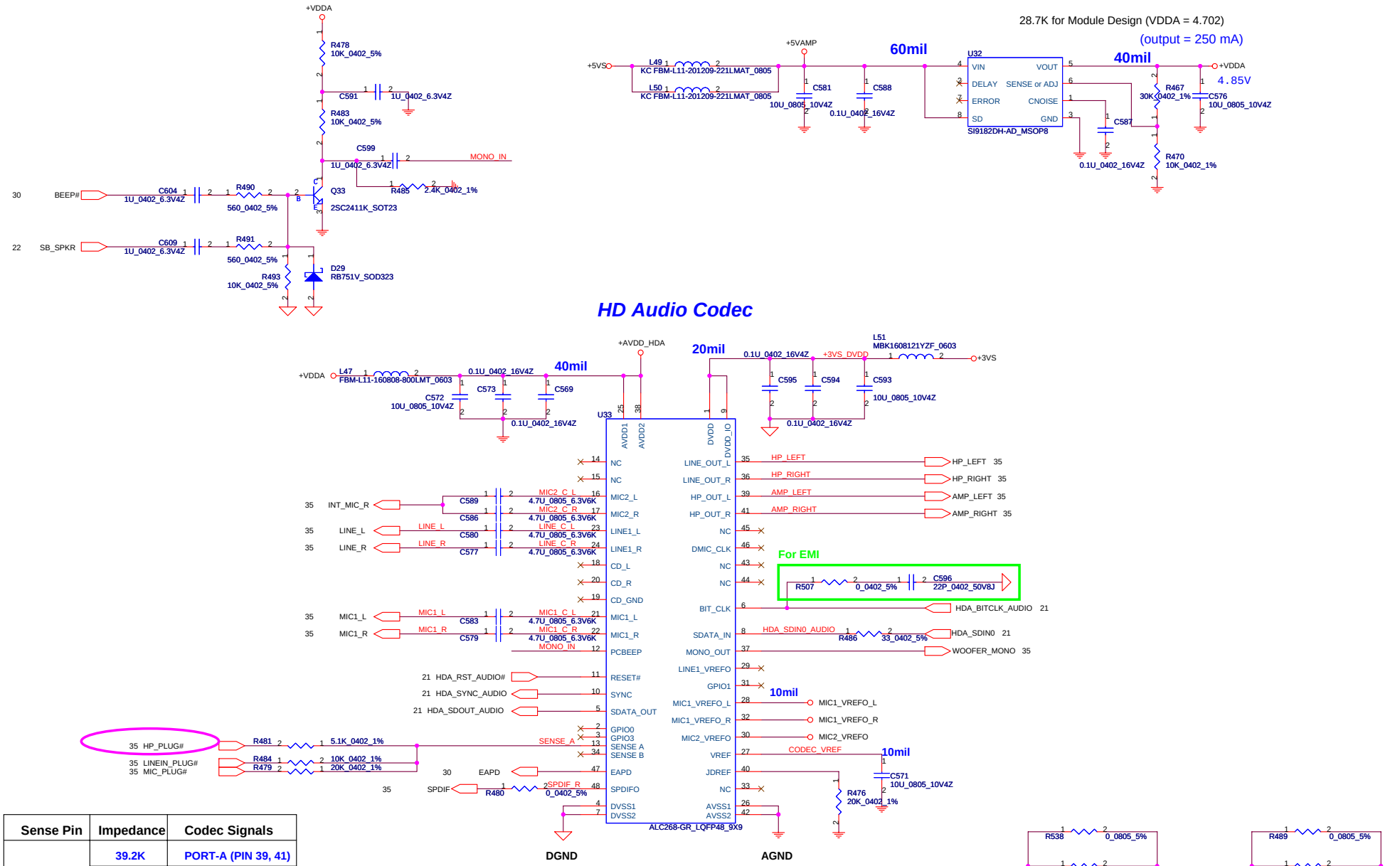

Sense Pin	Impedance	Codec Signals
SENSE A	39.2K	PORT-A (PIN 39, 41)
	20K	PORT-B (PIN 21, 22)
	10K	PORT-C (PIN 23, 24)
	5.1K	PORT-D (PIN 35, 36)
SENSE B	39.2K	PORT-E (PIN 14, 15)
	20K	PORT-F (PIN 16, 17)
	10K	PORT-G (PIN 43, 44)
	5.1K	PORT-H (PIN 45, 46)

Security Classification	Compal Secret Data			Compal Electronics, Inc.
Issued Date	2006/12/25	Deciphered Date	2007/12/25	Title: HD Audio Codec ALC268
				Size: B; Document Number: ICL50/ICK70 M/B LA-3551P Schematic; Rev: 1.0
				Date: Monday, April 23, 2007; Sheet 34 of 48

THIS SHEET OF ENGINEERING DRAWING IS THE PROPRIETARY PROPERTY OF COMPAL ELECTRONICS, INC. AND CONTAINS CONFIDENTIAL AND TRADE SECRET INFORMATION. THIS SHEET MAY NOT BE TRANSFERRED FROM THE CUSTODY OF THE COMPETENT DIVISION OF R&D DEPARTMENT EXCEPT AS AUTHORIZED BY COMPAL ELECTRONICS, INC. NEITHER THIS SHEET NOR THE INFORMATION IT CONTAINS MAY BE USED BY OR DISCLOSED TO ANY THIRD PARTY WITHOUT PRIOR WRITTEN CONSENT OF COMPAL ELECTRONICS, INC.

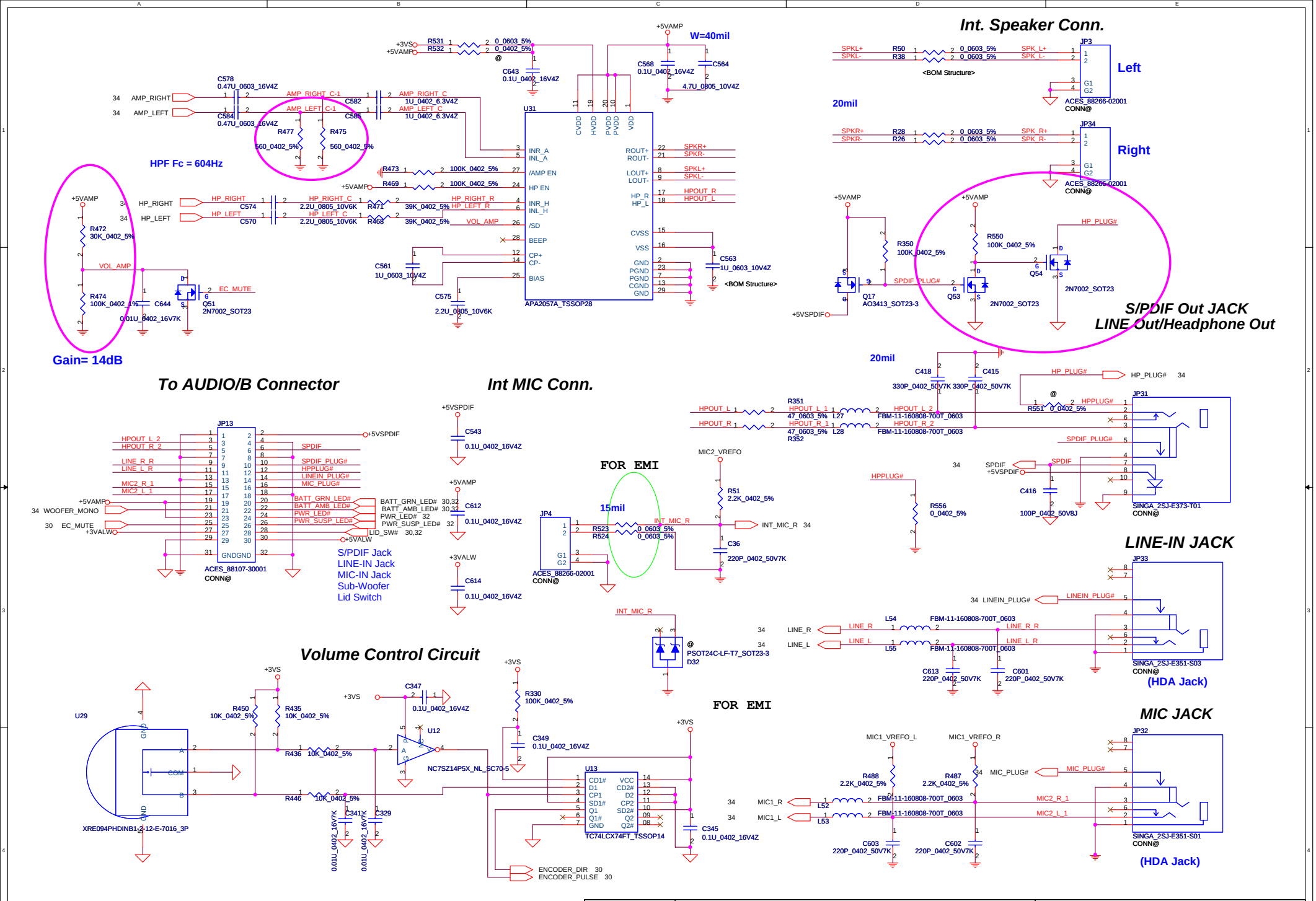

Security Classification	Compal Secret Data		
Issued Date	2006/12/25	Deciphered Date	2007/12/25

THIS SHEET OF ENGINEERING DRAWING IS THE PROPRIETARY PROPERTY OF COMPAL ELECTRONICS, INC. AND CONTAINS CONFIDENTIAL AND TRADE SECRET INFORMATION. THIS SHEET MAY NOT BE TRANSFERED FROM THE CUSTODY OF THE COMPETENT DIVISION OF R&D DEPARTMENT EXCEPT AS AUTHORIZED BY COMPAL ELECTRONICS, INC. NEITHER THIS SHEET NOR THE INFORMATION IT CONTAINS MAY BE USED BY OR DISCLOSED TO ANY THIRD PARTY WITHOUT PRIOR WRITTEN CONSENT OF COMPAL ELECTRONICS, INC.

Compal Electronics, Inc.

Title: Amplifier & Audio Jack

Size: B | Document Number: ICL50/ICK70 M/B LA-3551P Schematic | Rev: 1.0

Date: Monday, April 23, 2007 | Sheet 35 of 48

FAN1 Conn

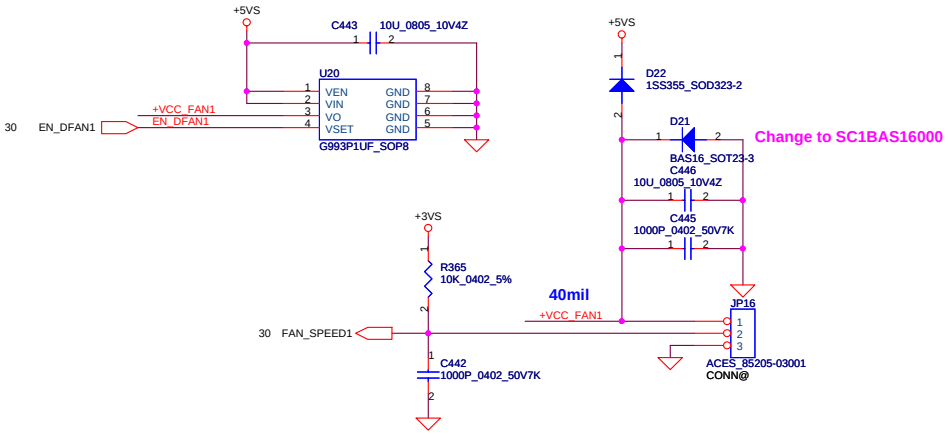

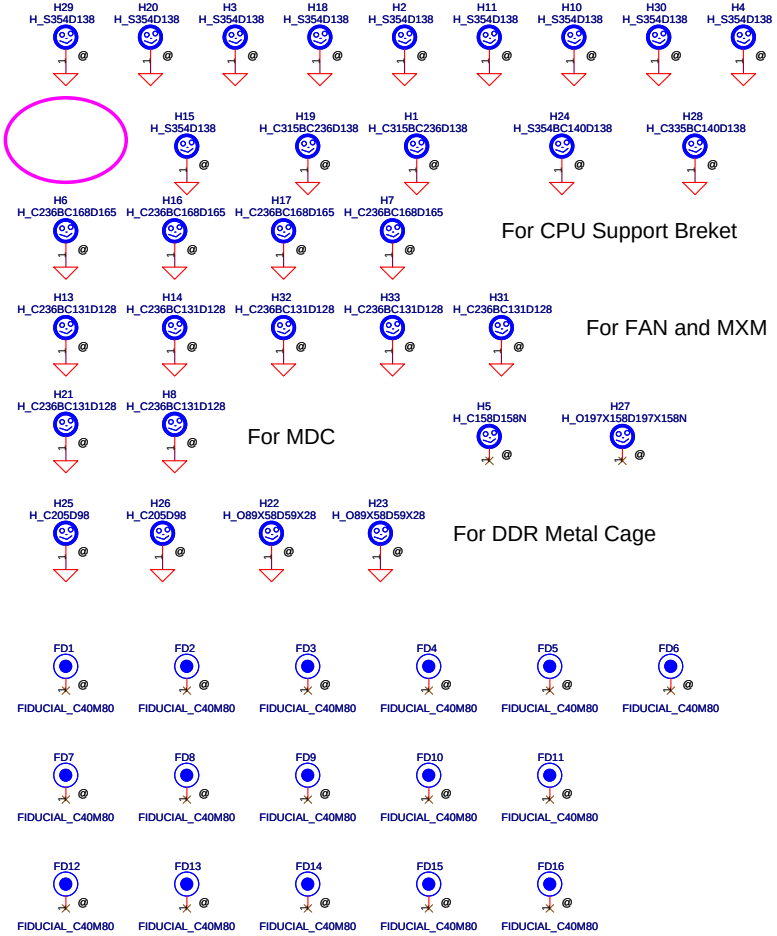

Security Classification	Compal Secret Data			Compal Electronics, Inc.
Issued Date	2006/12/25	Deciphered Date	2007/12/25	Title: FAN & Screw Hole
				Size: B — Document Number: ICL50/ICK70 M/B LA-3551P Schematic — Rev: 1.0
				Date: Monday, April 23, 2007 — Sheet 36 of 48

THIS SHEET OF ENGINEERING DRAWING IS THE PROPRIETARY PROPERTY OF COMPAL ELECTRONICS, INC. AND CONTAINS CONFIDENTIAL AND TRADE SECRET INFORMATION. THIS SHEET MAY NOT BE TRANSFERED FROM THE CUSTODY OF THE COMPETENT DIVISION OF R&D DEPARTMENT EXCEPT AS AUTHORIZED BY COMPAL ELECTRONICS, INC. NEITHER THIS SHEET NOR THE INFORMATION IT CONTAINS MAY BE USED BY OR DISCLOSED TO ANY THIRD PARTY WITHOUT PRIOR WRITTEN CONSENT OF COMPAL ELECTRONICS, INC.

+5VALW TO +5VS

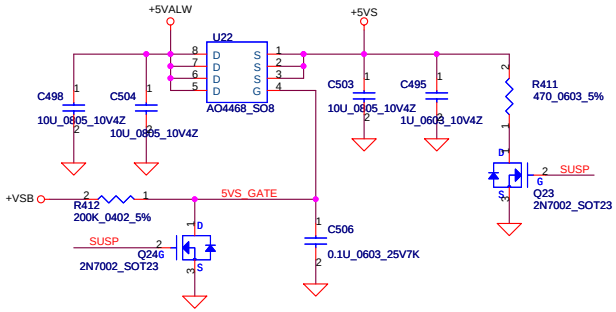

+3VALW TO +3V_SB(ICH8M AUX Power)

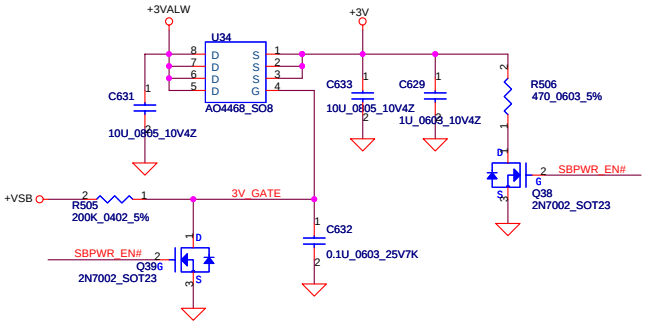

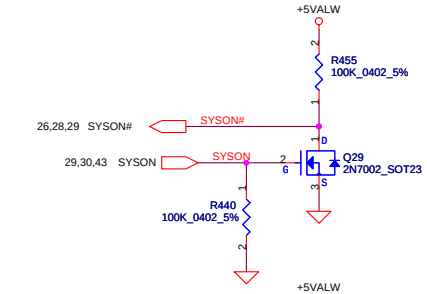

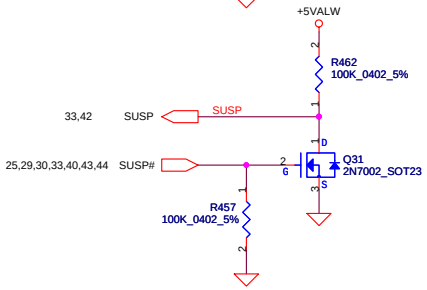

+3VALW TO +3VS

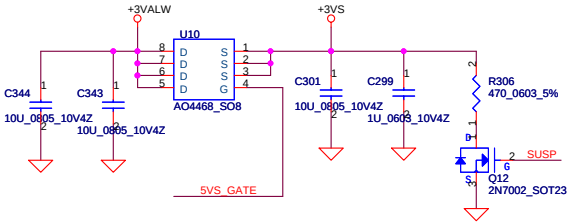

+1.8V to +1.8VS

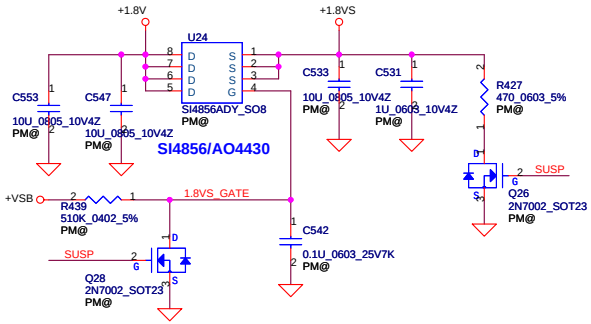

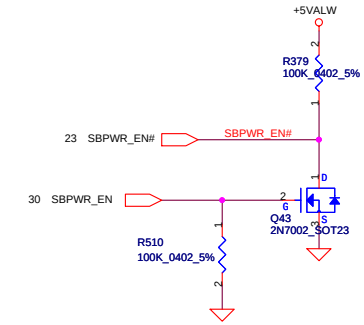

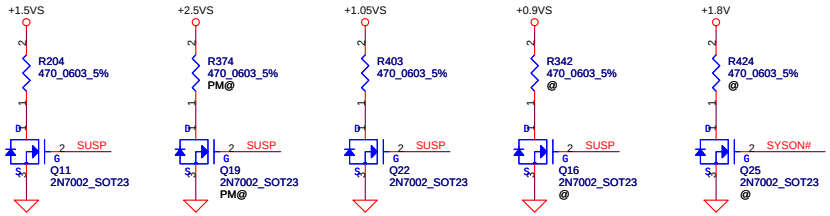

Security Classification	Compal Secret Data			Compal Electronics, Inc.
Issued Date	2006/12/25	Deciphered Date	2007/12/25	Title: DC Interface
THIS SHEET OF ENGINEERING DRAWING IS THE PROPRIETARY PROPERTY OF COMPAL ELECTRONICS, INC. AND CONTAINS CONFIDENTIAL AND TRADE SECRET INFORMATION. THIS SHEET MAY NOT BE TRANSFERED FROM THE CUSTODY OF THE COMPETENT DIVISION OF R&D DEPARTMENT EXCEPT AS AUTHORIZED BY COMPAL ELECTRONICS, INC. NEITHER THIS SHEET NOR THE INFORMATION IT CONTAINS MAY BE USED BY OR DISCLOSED TO ANY THIRD PARTY WITHOUT PRIOR WRITTEN CONSENT OF COMPAL ELECTRONICS, INC.				Size: B; Document Number: ICL50/ICK70 M/B LA-3551P Schematic; Rev: 1.0
				Date: Monday, April 23, 2007; Sheet 37 of 48

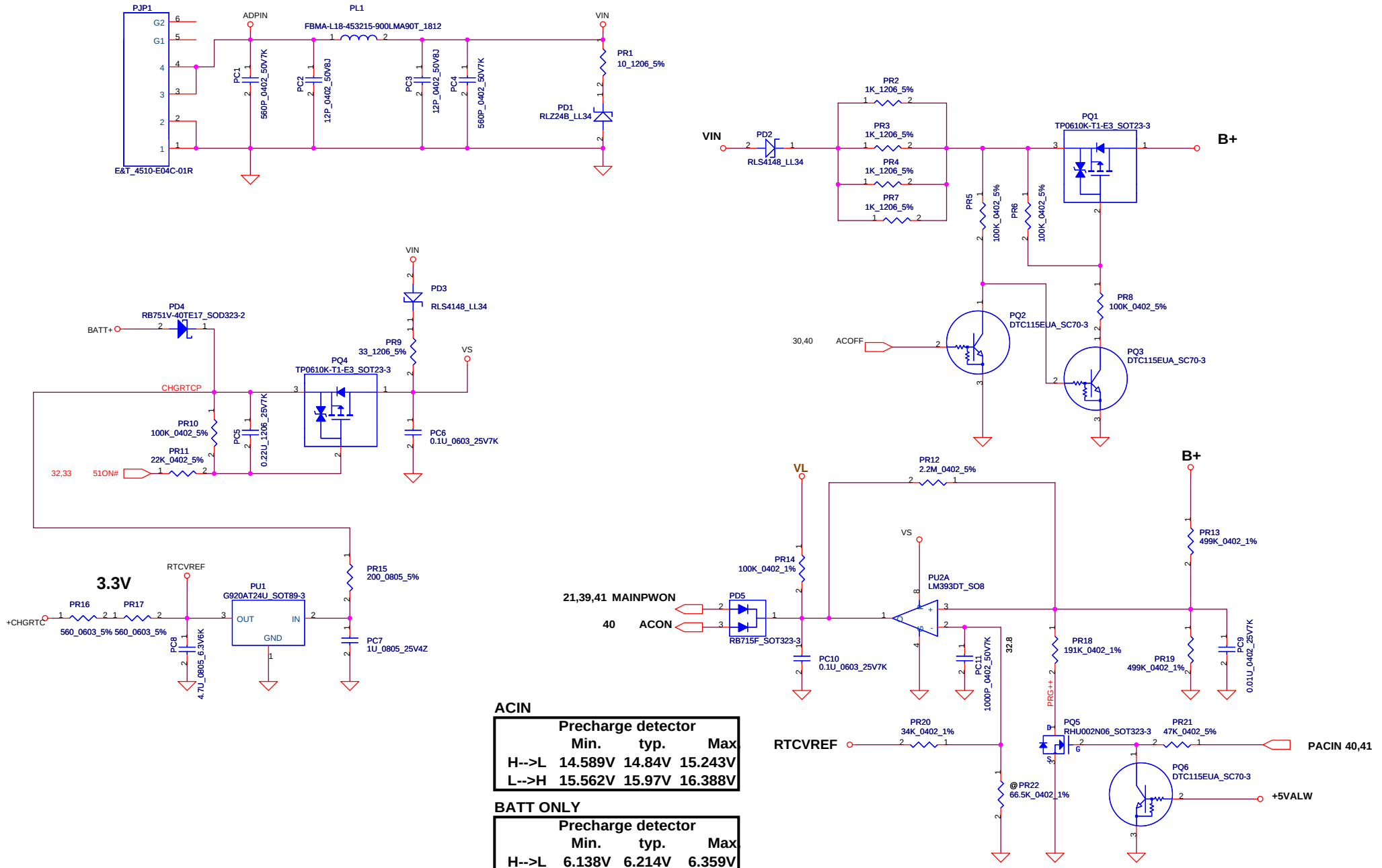

ACIN

Precharge detector	Min.	typ.	Max.
H-->L	14.589V	14.84V	15.243V
L-->H	15.562V	15.97V	16.388V

BATT ONLY

Precharge detector	Min.	typ.	Max.
H-->L	6.138V	6.214V	6.359V
L-->H	7.196V	7.349V	7.505V

Security Classification	Compal Secret Data		
Issued Date	2006/08/22	Deciphered Date	2007/08/22

THIS SHEET OF ENGINEERING DRAWING IS THE PROPRIETARY PROPERTY OF COMPAL ELECTRONICS, INC. AND CONTAINS CONFIDENTIAL AND TRADE SECRET INFORMATION. THIS SHEET MAY NOT BE TRANSFERED FROM THE CUSTODY OF THE COMPETENT DIVISION OF R&D DEPARTMENT EXCEPT AS AUTHORIZED BY COMPAL ELECTRONICS, INC. NEITHER THIS SHEET NOR THE INFORMATION IT CONTAINS MAY BE USED BY OR DISCLOSED TO ANY THIRD PARTY WITHOUT PRIOR WRITTEN CONSENT OF COMPAL ELECTRONICS, INC.

Compal Electronics, Inc.

Title: DCIN/DECTOR

Size: B | Document Number: ICL50/ICK70 | Rev: 1.0

Date: Thursday, April 19, 2007 | Sheet 38 of 48

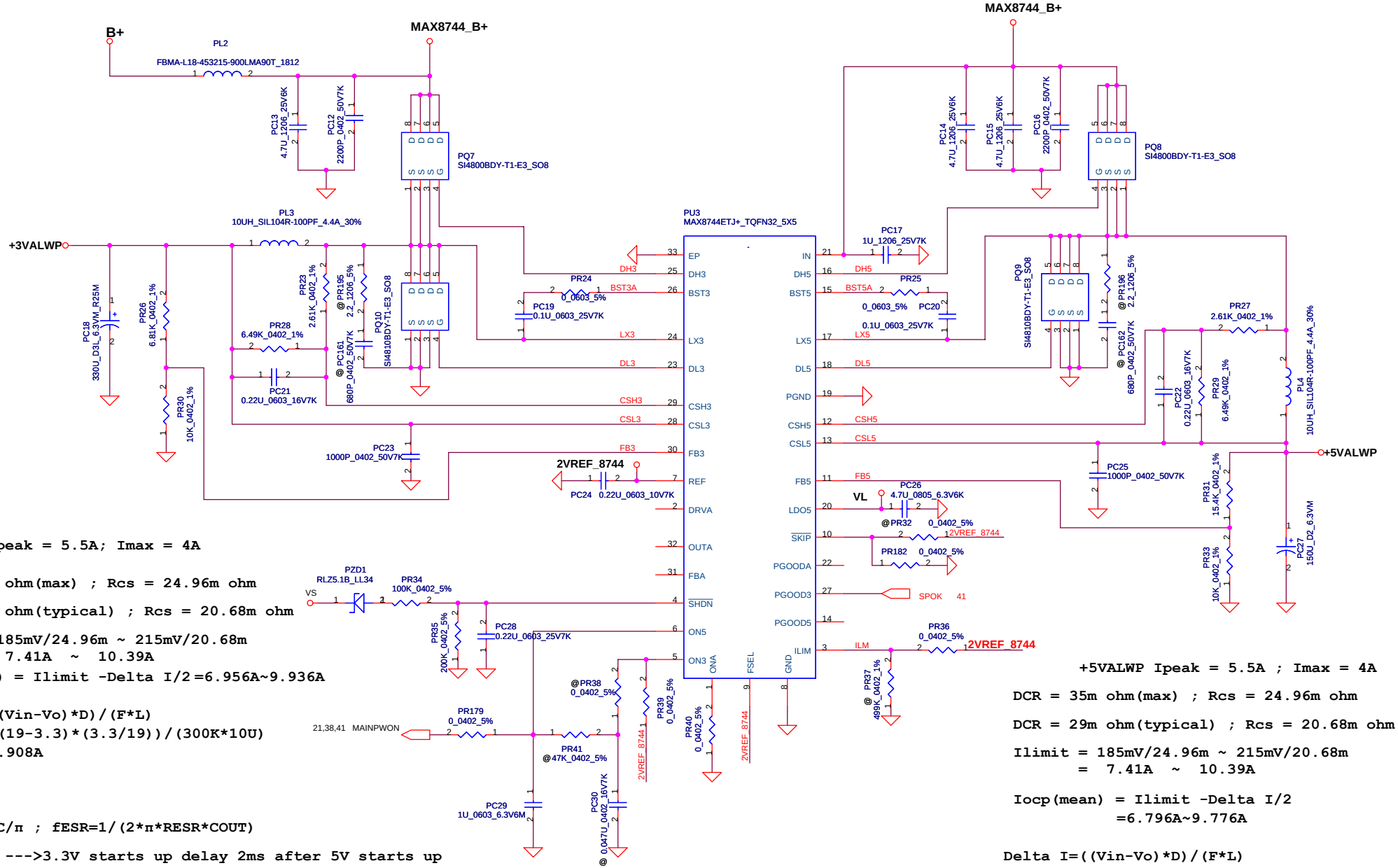

+3VALWP Ipeak = 5.5A; Imax = 4A

DCR = 35m ohm(max) ; Rcs = 24.96m ohm

DCR = 29m ohm(typical) ; Rcs = 20.68m ohm

Ilimit = 185mV/24.96m ~ 215mV/20.68m
= 7.41A ~ 10.39A

Iocp(mean) = Ilimit -Delta I/2=6.956A~9.936A

Delta I=((Vin-Vo)*D)/(F*L)
=((19-3.3)*(3.3/19))/(300K*10U)
=0.908A

Notes :

fESR<=fOSC/π ; fESR=1/(2*π*RESR*COUT)

ON3 = REF --->3.3V starts up delay 2ms after 5V starts up

+5VALWP Ipeak = 5.5A ; Imax = 4A

DCR = 35m ohm(max) ; Rcs = 24.96m ohm

DCR = 29m ohm(typical) ; Rcs = 20.68m ohm

Ilimit = 185mV/24.96m ~ 215mV/20.68m
= 7.41A ~ 10.39A

Iocp(mean) = Ilimit -Delta I/2
=6.796A~9.776A

Delta I=((Vin-Vo)*D)/(F*L)
=((19-5)*(5/19))/(300K*10U)
1.228A

Security Classification	Compal Secret Data		
Issued Date	2006/08/22	Deciphered Date	2007/08/22

THIS SHEET OF ENGINEERING DRAWING IS THE PROPRIETARY PROPERTY OF COMPAL ELECTRONICS, INC. AND CONTAINS CONFIDENTIAL AND TRADE SECRET INFORMATION. THIS SHEET MAY NOT BE TRANSFERED FROM THE CUSTODY OF THE COMPETENT DIVISION OF R&D DEPARTMENT EXCEPT AS AUTHORIZED BY COMPAL ELECTRONICS, INC. NEITHER THIS SHEET NOR THE INFORMATION IT CONTAINS MAY BE USED BY OR DISCLOSED TO ANY THIRD PARTY WITHOUT PRIOR WRITTEN CONSENT OF COMPAL ELECTRONICS, INC.

Compal Electronics, Inc.

Title: **+5VALWP/+3VALWP**

Size: Custom | Document Number: ICL50/ICK70 | Rev: 1.0

Date: Thursday, April 19, 2007 | Sheet 39 of 48

Iada=0~4.74A(90W)

ADP_I = 19.9*Iadapter*Rsense

CP = 85%*Iada ; CP = 4.07A

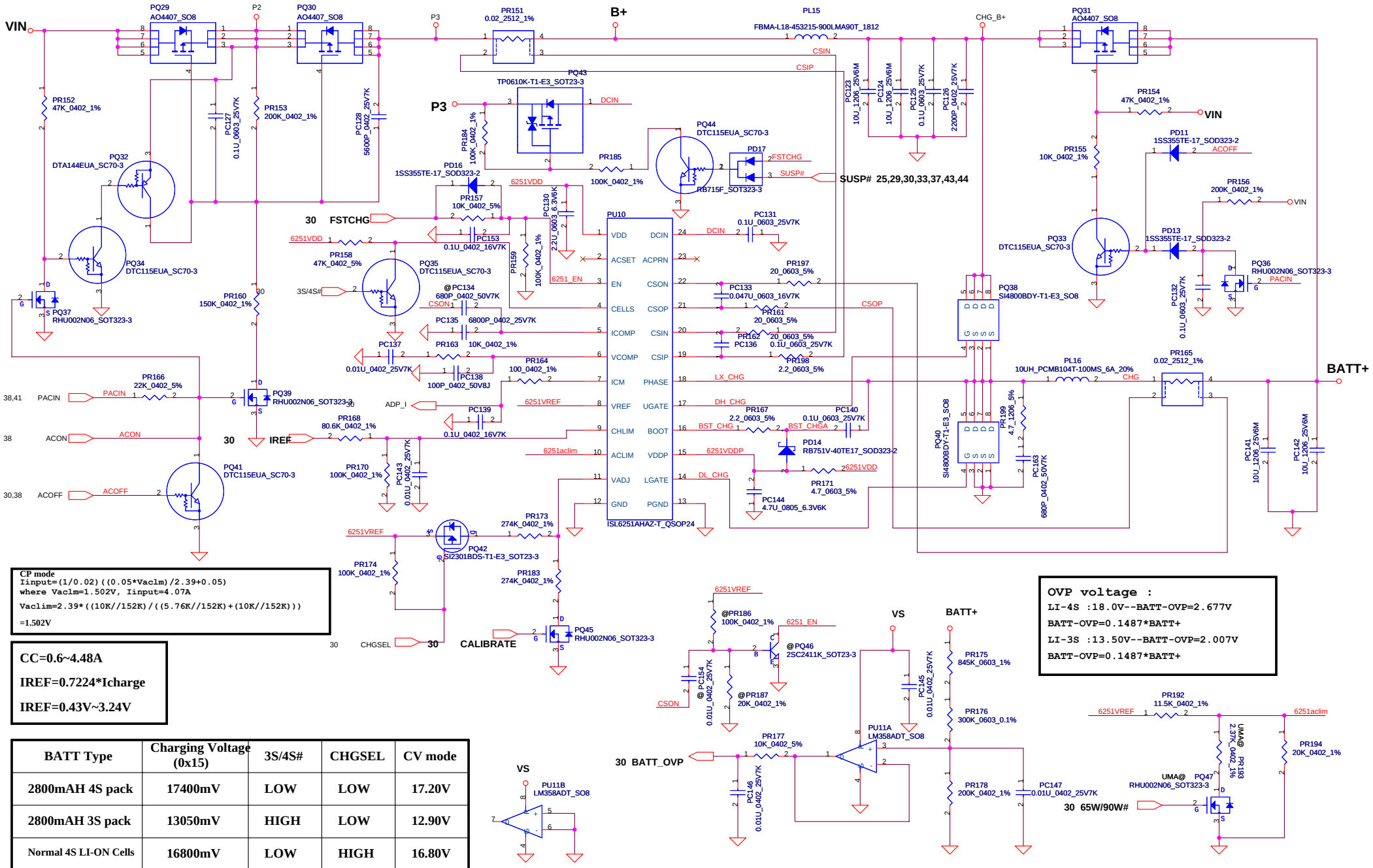

CP mode
Iinput=(1/0.02)((0.05*Vaclm)/2.39+0.05)
where Vaclm=1.502V, Iinput=4.07A
Vaclim=2.39*((10K//152K)/((5.76K//152K)+(10K//152K)))
=1.502V

CC=0.6~4.48A

IREF=0.7224*Icharge

IREF=0.43V~3.24V

OVP voltage :
LI-4S :18.0V--BATT-OVP=2.677V
BATT-OVP=0.1487*BATT+
LI-3S :13.50V--BATT-OVP=2.007V
BATT-OVP=0.1487*BATT+

BATT Type	Charging Voltage (0x15)	3S/4S#	CHGSEL	CV mode
2800mAH 4S pack	17400mV	LOW	LOW	17.20V
2800mAH 3S pack	13050mV	HIGH	LOW	12.90V
Normal 4S LI-ON Cells	16800mV	LOW	HIGH	16.80V
Normal 3S LI-ON Cells	12600mV	HIGH	HIGH	12.60V
Wake up charge while no communication	-	HIGH	HIGH	12.60V

Security Classification	Compal Secret Data		
Issued Date	2006/08/22	Deciphered Date	2007/0822

THIS SHEET OF ENGINEERING DRAWING IS THE PROPRIETARY PROPERTY OF COMPAL ELECTRONICS, INC. AND CONTAINS CONFIDENTIAL AND TRADE SECRET INFORMATION. THIS SHEET MAY NOT BE TRANSFERED FROM THE CUSTODY OF THE COMPETENT DIVISION OF R&D DEPARTMENT EXCEPT AS AUTHORIZED BY COMPAL ELECTRONICS, INC. NEITHER THIS SHEET NOR THE INFORMATION IT CONTAINS MAY BE USED BY OR DISCLOSED TO ANY THIRD PARTY WITHOUT PRIOR WRITTEN CONSENT OF COMPAL ELECTRONICS, INC.

Compal Electronics, Inc.

Title: CHARGER

Size | Document Number: ICL50/ICK70 | Rev: 1.0

Date: Thursday, April 19, 2007 | Sheet 40 of 48

PH1 under CPU botten side :
CPU thermal protection at 90 degree C
Recovery at 70 degree C

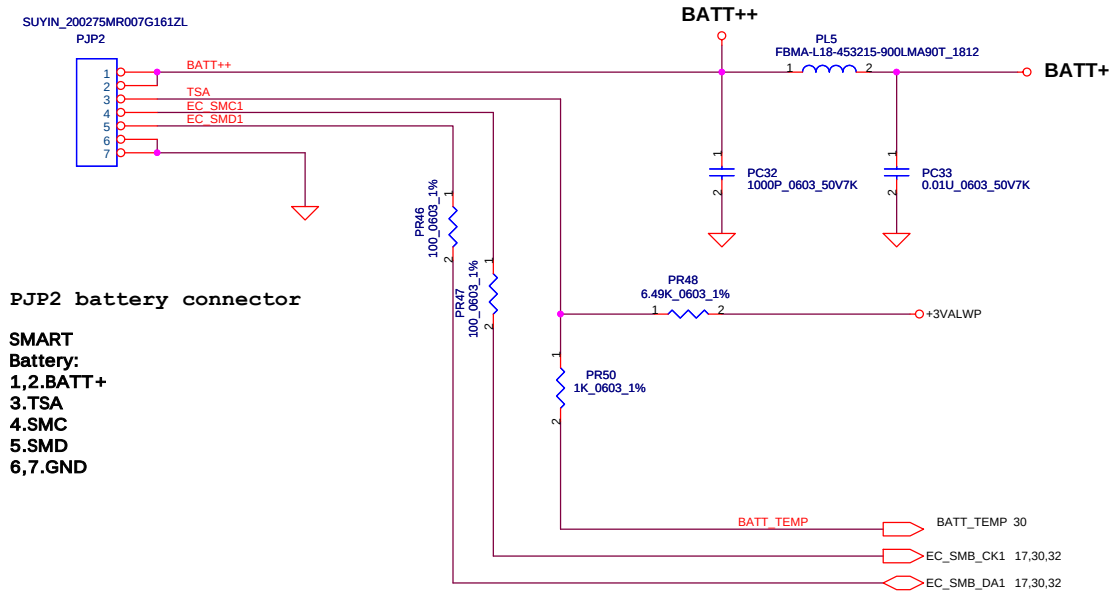

PJP2 battery connector

SMART
Battery:
1,2.BATT+
3.TSA
4.SMC
5.SMD
6,7.GND

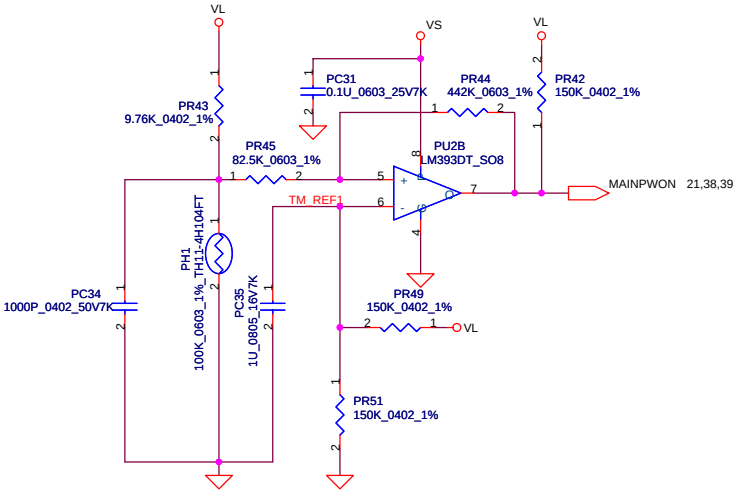

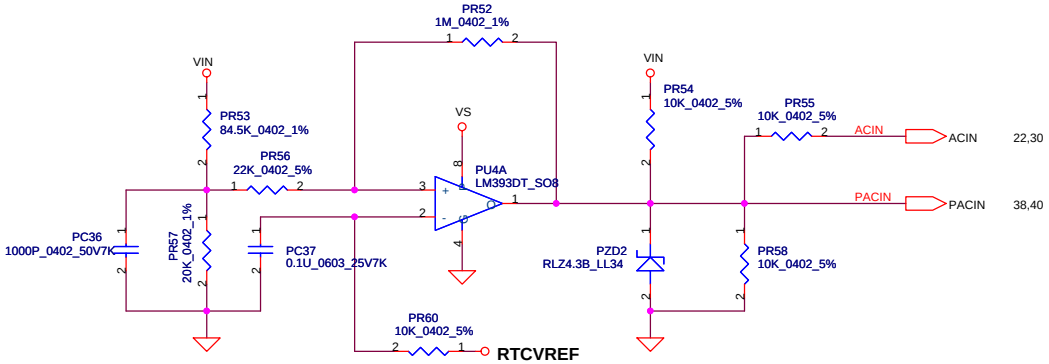

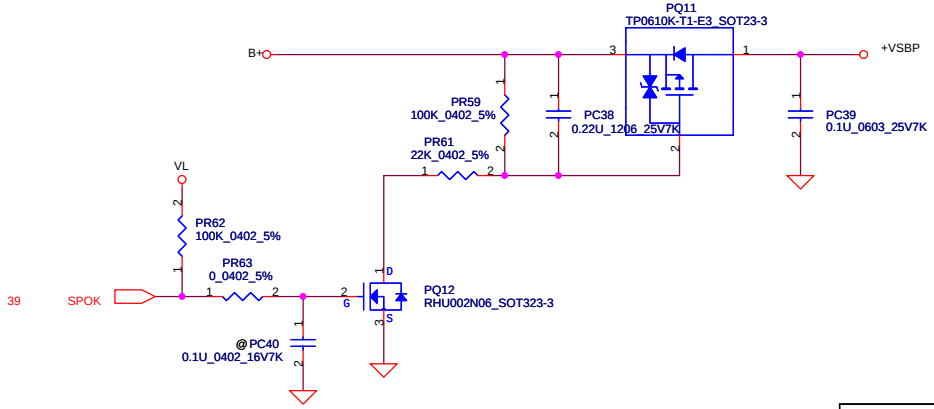

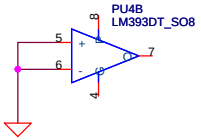

Vin Detector

	Min.	typ.	Max.
H-->L	16.976V	17.257V	17.728V
L-->H	17.430V	17.901V	18.384V

Security Classification	Compal Secret Data		
Issued Date	2006/08/22	Deciphered Date	2007/08/22

THIS SHEET OF ENGINEERING DRAWING IS THE PROPRIETARY PROPERTY OF COMPAL ELECTRONICS, INC. AND CONTAINS CONFIDENTIAL AND TRADE SECRET INFORMATION. THIS SHEET MAY NOT BE TRANSFERED FROM THE CUSTODY OF THE COMPETENT DIVISION OF R&D DEPARTMENT EXCEPT AS AUTHORIZED BY COMPAL ELECTRONICS, INC. NEITHER THIS SHEET NOR THE INFORMATION IT CONTAINS MAY BE USED BY OR DISCLOSED TO ANY THIRD PARTY WITHOUT PRIOR WRITTEN CONSENT OF COMPAL ELECTRONICS, INC.

Compal Electronics, Inc.

Title: BATTERY CONN. / OTP

Size: B | Document Number: ICL50/ICK70 | Rev: 1.0

Date: Thursday, April 19, 2007 | Sheet 41 of 48

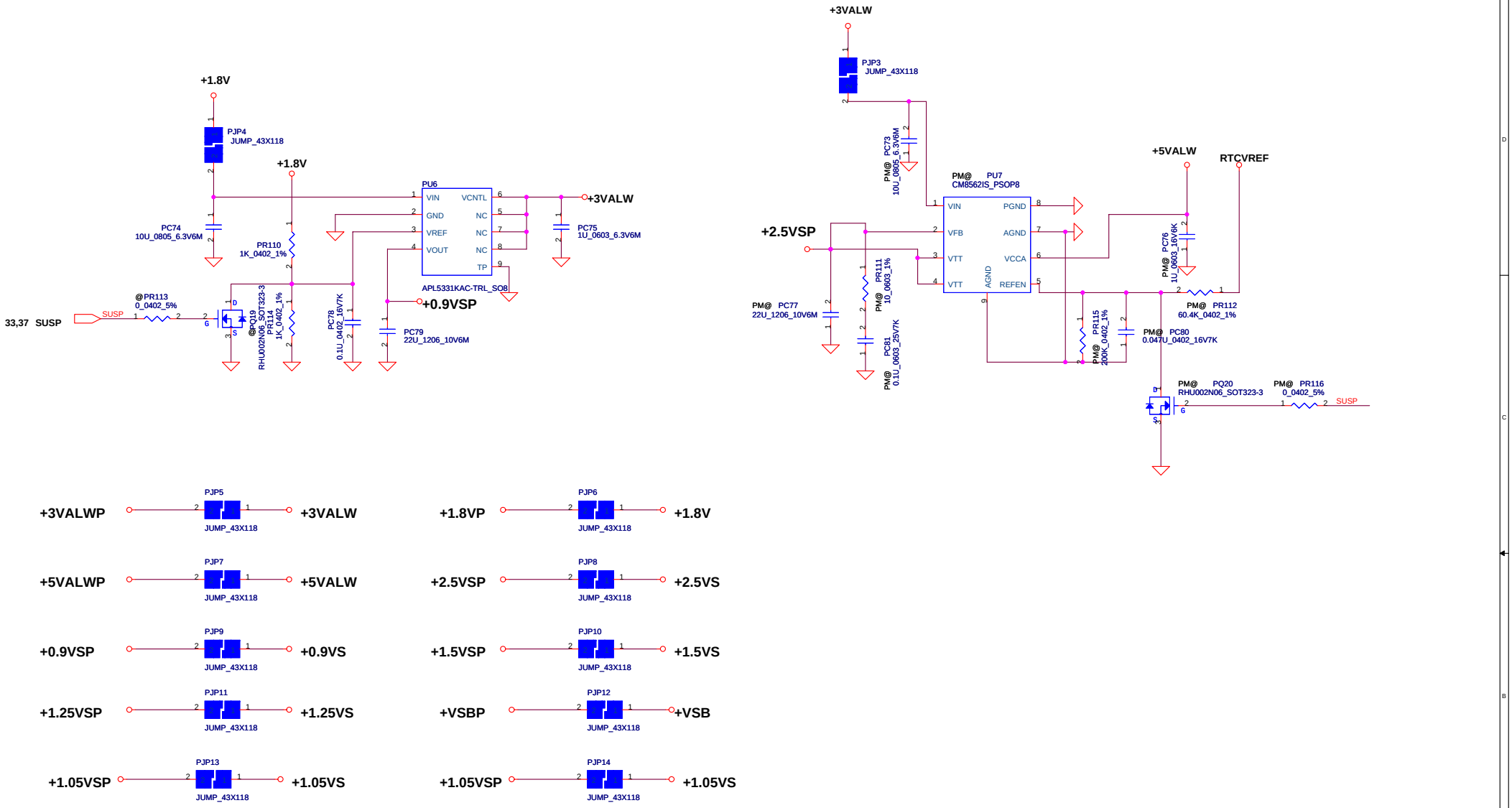

Security Classification	Compal Secret Data			Compal Electronics, Inc.
Issued Date	2006/08/22	Deciphered Date	2007/08/22	Title: +0.9VSP/+2.5VSP
				Size: Custom; Document Number: ICL50/ICK70; Rev: 1.0
				Date: Thursday, April 19, 2007; Sheet 42 of 48

THIS SHEET OF ENGINEERING DRAWING IS THE PROPRIETARY PROPERTY OF COMPAL ELECTRONICS, INC. AND CONTAINS CONFIDENTIAL AND TRADE SECRET INFORMATION. THIS SHEET MAY NOT BE TRANSFERRED FROM THE CUSTODY OF THE COMPETENT DIVISION OF R&D DEPARTMENT EXCEPT AS AUTHORIZED BY COMPAL ELECTRONICS, INC. NEITHER THIS SHEET NOR THE INFORMATION IT CONTAINS MAY BE USED BY OR DISCLOSED TO ANY THIRD PARTY WITHOUT PRIOR WRITTEN CONSENT OF COMPAL ELECTRONICS, INC.

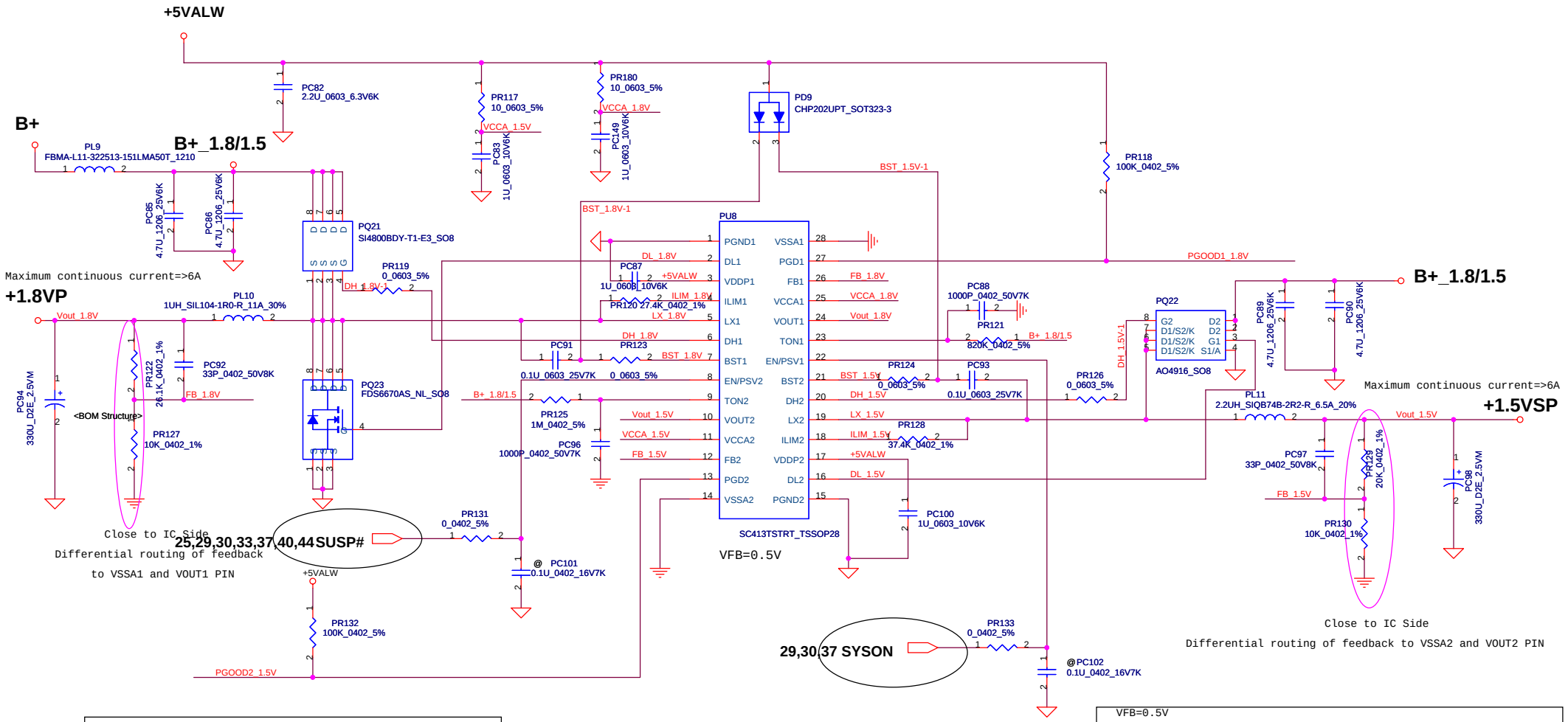

VFB=0.5V

Vo=VFB*(1+PR122/PR127)=1.805V

Ipeak=11.73A, Imax=8.211A

Ton=(3.3E-12*(PR121+37K)*(Vout/VBat))+50ns

=3.3*10e-12*(820K+37K)*(1.8/19)+50ns=0.3179us

FDS6670AS:Rds(on)=>Typ:9 mOhm

Max:11.5 mOhm

Iocp=Ivalley+"Iripple%/2

Iripple=(vin-vout)*(Ton/L)=5.467A, 1/2 Iripple=2.734A.

Ivalleymin=10E-6*(PR120/Rds(ON)max*1.5)

=9*10e-6*(27.4K/0.0115*1.5)=14.295A>11.73*1.2=14.076A

Ivalleymax=10E-6*(PR120/Rds(ON)typ*1.2)

=11*10e-6*(27.4K/0.009*1.2)=27.907A.

OCP==>17.029A~30.641A

VFB=0.5V

Vo=VFB*(1+PR129/PR130)=1.5V

Ipeak=4.39A+2.91A=7.3A, Imax=7.3*0.7=5.11A

Ton=(3.3E-12*(PR125+37K)*(Vout/VBat))+50ns

=0.3201us

AO4916 Rds(on)=>Typ:21 mOhm

Max:27 mOhm

Ivalleymin=9*E-6*(37.4K/0.027*1.4)=8.904A>7.3*1.2=8.76A

Ivalleymax=11*E-6*(37.4K/0.021*1.1)=17.809A

Iripple=(vin-vout)*(Ton/L)=2.546A, 1/2Iriiple=1.273A

Iocp=Ivalley+"Iripple%/2

OCP==>10.177A~19.082A

Security Classification	Compal Secret Data		
Issued Date	2006/08/22	Deciphered Date	2007/08/22

THIS SHEET OF ENGINEERING DRAWING IS THE PROPRIETARY PROPERTY OF COMPAL ELECTRONICS, INC. AND CONTAINS CONFIDENTIAL AND TRADE SECRET INFORMATION. THIS SHEET MAY NOT BE TRANSFERED FROM THE CUSTODY OF THE COMPETENT DIVISION OF R&D DEPARTMENT EXCEPT AS AUTHORIZED BY COMPAL ELECTRONICS, INC. NEITHER THIS SHEET NOR THE INFORMATION IT CONTAINS MAY BE USED BY OR DISCLOSED TO ANY THIRD PARTY WITHOUT PRIOR WRITTEN CONSENT OF COMPAL ELECTRONICS, INC.

Compal Electronics, Inc.

Title: +1.5VSP/+1.8VP

Size: Custom | Document Number: ICL50/ICK70 | Rev: 1.0

Date: Thursday, April 19, 2007 | Sheet 43 of 48

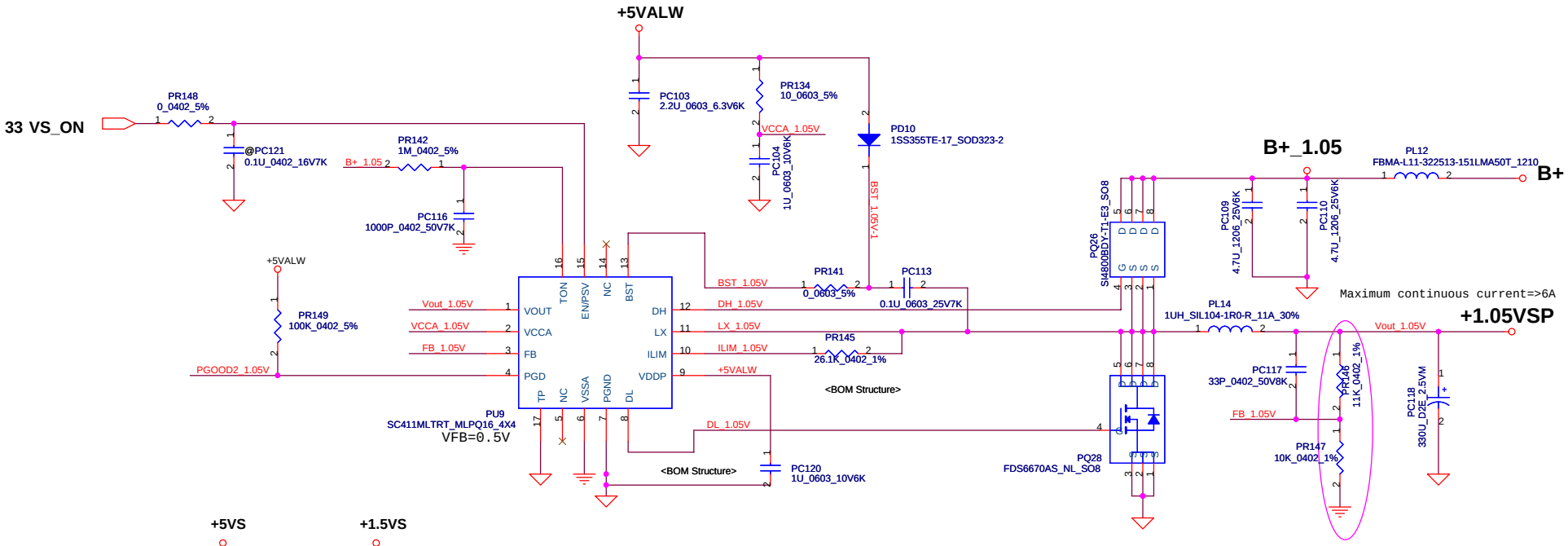

Close to IC Side

Differential routing of feedback to VSSA2 and VOUT2 PIN

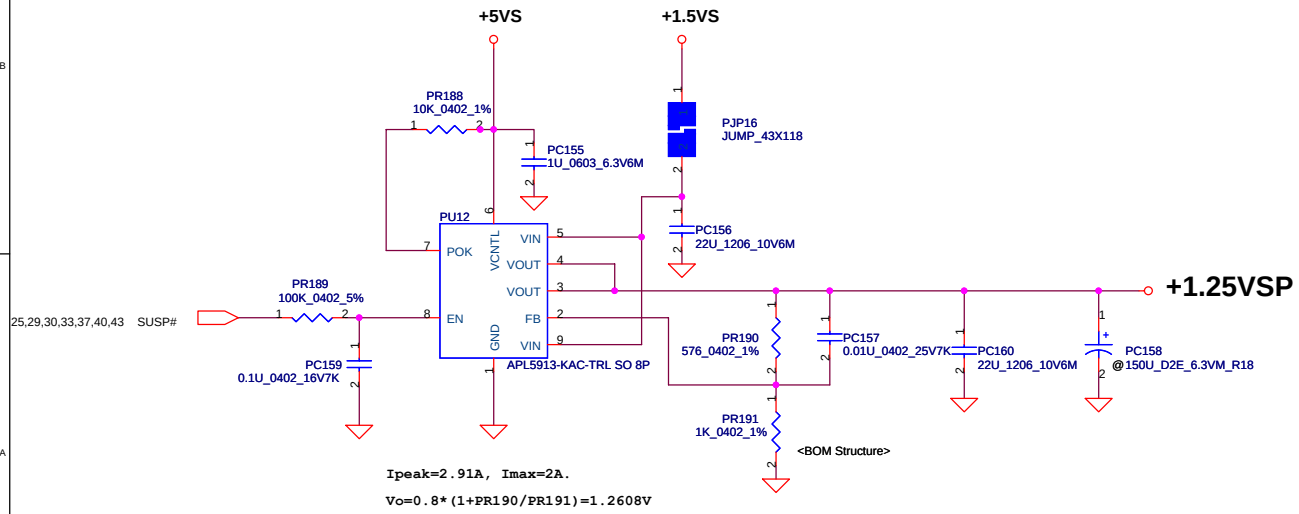

VFB=0.5V, Ipeak=14.02A, Imax=9.814A

The current rating of +1.05VSP include +VCC_GFX current.

Vo=VFB*(1+PR146/PR147)=1.05V

Ton=(3.3E-12*(PR142+37K)*(Vout/VBat))+50ns=0.2391us

SI4810BDY:Rds(on)=>Typ:9mOhm

Max:11.5 mOhm

Ivalleymin=9*10E-6*(PR145/Rds(ON)max*1.5)

=9*10E-6*(26.1K/(0.0115*1.5))=13.617A

Ivalleymax=11*10E-6*(PR145/Rds(ON)min*1.2)

=11*10E-6*(26.1K/(0.009*1.3))=20.076A

Iripple=(vin-vout)*(Ton/L)=4.292A, 1/2Iripple=2.146A

Iocp=Ivalley+"Iripple%/2

OCP==>15.763A~22.222A

Security Classification	Compal Secret Data		
Issued Date	2006/08/22	Deciphered Date	2007/08/22

THIS SHEET OF ENGINEERING DRAWING IS THE PROPRIETARY PROPERTY OF COMPAL ELECTRONICS, INC. AND CONTAINS CONFIDENTIAL AND TRADE SECRET INFORMATION. THIS SHEET MAY NOT BE TRANSFERED FROM THE CUSTODY OF THE COMPETENT DIVISION OF R&D DEPARTMENT EXCEPT AS AUTHORIZED BY COMPAL ELECTRONICS, INC. NEITHER THIS SHEET NOR THE INFORMATION IT CONTAINS MAY BE USED BY OR DISCLOSED TO ANY THIRD PARTY WITHOUT PRIOR WRITTEN CONSENT OF COMPAL ELECTRONICS, INC.

Compal Electronics, Inc.

Title: **+1.25VSP/+1.05VSP**

Size: Custom | Document Number: ICL50/ICK70 | Rev: 1.0

Date: Thursday, April 19, 2007 | Sheet 44 of 48

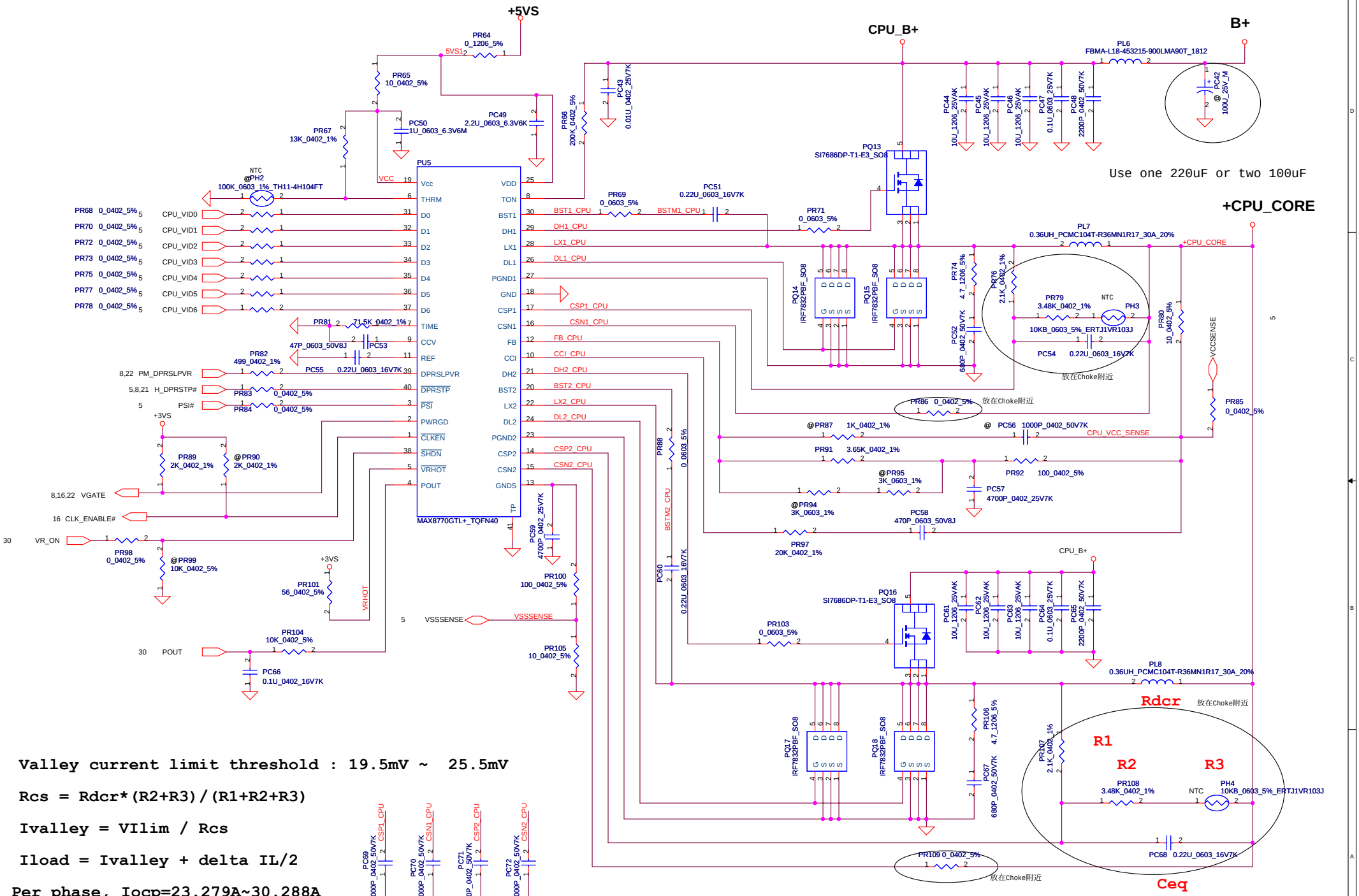

Security Classification	Compal Secret Data		
Issued Date	2005/06/20	Deciphered Date	2006/06/20

THIS SHEET OF ENGINEERING DRAWING IS THE PROPRIETARY PROPERTY OF COMPAL ELECTRONICS, INC. AND CONTAINS CONFIDENTIAL AND TRADE SECRET INFORMATION. THIS SHEET MAY NOT BE TRANSFERED FROM THE CUSTODY OF THE COMPETENT DIVISION OF R&D DEPARTMENT EXCEPT AS AUTHORIZED BY COMPAL ELECTRONICS, INC. NEITHER THIS SHEET NOR THE INFORMATION IT CONTAINS MAY BE USED BY OR DISCLOSED TO ANY THIRD PARTY WITHOUT PRIOR WRITTEN CONSENT OF COMPAL ELECTRONICS, INC.

Compal Electronics, Inc.

Title: **+CPU_CORE**

Size: Custom | Document Number: ICL50/ICK70 | Rev: 1.0

Date: Thursday, April 19, 2007 | Sheet 45 of 48

Version change list (P.I.R. List)

for PWR

Item	Fixed Issue	Reason for change	Rev.	PG#	Modify List	Date	Phase
1	CPU_CORE high side MOS desine change	In order to prevent EOL of SI7840, change to SI7686.	0.1	45	Change PQ13 and PQ16 form SB578400080(S TR SI7840DP-T1-E3 1N SO8) to SB000008L80(S TR SI7686DP-T1-E3 1N SO8).	10/30/06	EVT
2	For energy star SPEC request.	In order to for energy star SPEC request.	0.2	40	Add PQ43 SB906100210(S TR TP0610K)	12/21/06	DVT
3	For energy star SPEC request.	In order to for energy star SPEC request.	0.2	40	Add PQ44 SB301150000(S TR DTC115EUA)	12/21/06	DVT
4	For energy star SPEC request.	In order to for energy star SPEC request.	0.2	40	Add PD16 SC1SS355010(S DIO 1SS355) Delete PD12 SC1SS355010(S DIO 1SS355)	12/21/06	DVT
5	For energy star SPEC request.	In order to for energy star SPEC request.	0.2	40	Add PD17 SCSB715F000(S DIO RB715F)	12/21/06	DVT
6	For energy star SPEC request.	In order to for energy star SPEC request.	0.2	40	Add PR184,PR185 SD034100380(S RES 1/16W 100K 0402 1%)	12/21/06	DVT
7	For energy star SPEC request.	In order to for energy star SPEC request.	0.2	40	Add PC153 SE076104K80(S CER CAP 0.1U 0402 16V K X7R)	12/21/06	DVT
8	For energy star SPEC request.	In order to for energy star SPEC request.	0.2	40	Add PQ45 SB502060000(S TR RHU002N06)	12/21/06	DVT
9	For energy star SPEC request.	In order to for energy star SPEC request.	0.2	40	Add PQ46 SB324110010(S TR 2SC411K)	12/21/06	DVT
10	For energy star SPEC request.	In order to for energy star SPEC request.	0.2	40	Add PR183 SD034274380(S RES 1/16W 274K 0402 1%)	12/21/06	DVT
11	For energy star SPEC request.	In order to for energy star SPEC request.	0.2	40	Add PR186 SD034100380(S RES 1/16W 100K 0402 1%)	12/21/06	DVT
12	For energy star SPEC request.	In order to for energy star SPEC request.	0.2	40	Add PR187 SD034200280(S RES 1/16W 20K 0402 1%)	12/21/06	DVT
13	For energy star SPEC request.	In order to for energy star SPEC request.	0.2	40	Add PC154 and PC146 SE075103K80(S CER CAP 0.01U K 25V X7R 0402)	12/21/06	DVT
14	Noise issue in S3 mode and idle mode.	In order to prevent noise issue in S3 mode and idle mode.	0.2	40	Add PC42 SF22004M210(S CAP 220U_25V_M)	12/21/06	DVT
15	For energy star SPEC request.	In order to for energy star SPEC request.	0.2	40	Change PR157 from SD028000080(s res 1/16w 0 0402 5%) TO SD0281000280(S RES 1/16W 10K 0402 5%)	12/21/06	DVT
16	Improve pre-charge power sequence	Improve pre-charge power sequence	0.2	39	Change PR34 from SD028470280(S RES 1/16W 47K 0402 5%) to SD028100380(S RES 1/16W 100K 0402 5%)	12/21/06	DVT
17	Improve pre-charge power sequence	Improve pre-charge power sequence	0.2	39	Change PR35 SD028100380(S RES 1/16W 100K 0402 5%) to SD028200380(S RES 1/16W 200K 0402 5%)	12/21/06	DVT
18	Improve pre-charge power sequence	Improve pre-charge power sequence	0.2	39	Change PC28 from SE042104K80(S CER CAP 0.1U 25V K X7R 0603) to SE000005ZM8(S CER CAP 0.22U 25V K X7R 0603)	12/21/06	DVT
19	CPU MOSFET switching has interference.	Improve CPU switching interference.	0.2	45	Change PC69,PC70,PC71,PC72 from SE082221J80 to SE068102J80 (S CER CAP 1000P 25V J NPO 0402)	12/21/06	DVT
20	X63470BOL01 doesn't need +2.5VSP	Delete +2.5VSP from X63470BOL01.	0.2	42	Delete PU7 SA085620080 from X63470BOL01.	12/21/06	DVT
21	X63470BOL01 doesn't need +2.5VSP	Delete +2.5VSP from X63470BOL01.	0.2	42	Delete PQ20 SB502060000 from X63470BOL01.	12/21/06	DVT
22	X63470BOL01 doesn't need +2.5VSP	Delete +2.5VSP from X63470BOL01.	0.2	42	Delete PR111 SD014100A80 from X63470BOL01.	12/21/06	DVT
23	X63470BOL01 doesn't need +2.5VSP	Delete +2.5VSP from X63470BOL01.	0.2	42	Delete PR112 SD034604280 from X63470BOL01.	12/21/06	DVT

Version change list (P.I.R. List)

Item	Fixed Issue	Reason for change	Rev.	PG#	Modify List	Date	Phase
1	X63470BOL01 doesn't need +2.5VSP	Delete +2.5VSP from X63470BOL01.	0.2	42	Delete PR115 SD034200380 from X63470BOL01.	10/30/06	EVT
2	X63470BOL01 doesn't need +2.5VSP	Delete +2.5VSP from X63470BOL01.	0.2	42	Delete PR116 SD028000080 from X63470BOL01.	12/21/06	DVT
3	X63470BOL01 doesn't need +2.5VSP	Delete +2.5VSP from X63470BOL01.	0.2	42	Delete PC73 SE142475K80 from X63470BOL01.	12/21/06	DVT
4	X63470BOL01 doesn't need +2.5VSP	Delete +2.5VSP from X63470BOL01.	0.2	42	Delete PC76 SE135105K80 from X63470BOL01.	12/21/06	DVT
5	X63470BOL01 doesn't need +2.5VSP	Delete +2.5VSP from X63470BOL01.	0.2	42	Delete PC77 SE116226M80 from X63470BOL01.	12/21/06	DVT
6	X63470BOL01 doesn't need +2.5VSP	Delete +2.5VSP from X63470BOL01.	0.2	42	Delete PC80 SE076473K80 from X63470BOL01.	12/21/06	DVT
7	X63470BOL01 doesn't need +2.5VSP	Delete +2.5VSP from X63470BOL01.	0.2	42	Delete PC81 SE042104K80 from X63470BOL01.	12/21/06	DVT
8	Cost issue.	For cost down, change +1.25VSP solution.	0.3	44	Delete PQ25 SB548000310(S TR SI4800BDY).	12/27/06	DVT
9	Cost issue.	For cost down, change +1.25VSP solution.	0.3	44	Delete PQ27 SB548100020(S TR 4810BDY)	12/27/06	DVT
10	Cost issue.	For cost down, change +1.25VSP solution.	0.3	44	Change PD10 from SC1P202U010 to SC1SS355010.	12/27/06	DVT
11	Cost issue.	For cost down, change +1.25VSP solution.	0.3	44	Delete PR135 SD034100380.	12/27/06	DVT
12	Cost issue.	For cost down, change +1.25VSP solution.	0.3	44	Delete PR140,SD013000080, PR150 SD028000080.	12/27/06	DVT
13	Cost issue.	For cost down, change +1.25VSP solution.	0.3	44	Delete PR181 SD013100A80.	12/27/06	DVT
14	Cost issue.	For cost down, change +1.25VSP solution.	0.3	44	Delete PR139 SD034150280.	12/27/06	DVT
15	Cost issue.	For cost down, change +1.25VSP solution.	0.3	44	Delete PR144 SD034100280	12/27/06	DVT
16	Cost issue.	For cost down, change +1.25VSP solution.	0.3	44	Delete PR137 SD034105280.	12/27/06	DVT
17	Cost issue.	For cost down, change +1.25VSP solution.	0.3	44	Delete PR138 SD028100480.	12/27/06	DVT
18	Cost issue.	For cost down, change +1.25VSP solution.	0.3	44	Delelte PC105,PC106 SE142475K80.	12/27/06	DVT
19	Cost issue.	For cost down, change +1.25VSP solution.	0.3	44	Delete PC107,PC151 SE080105K80.	12/27/06	DVT
20	Cost issue.	For cost down, change +1.25VSP solution.	0.3	44	Delete PC108 SE074102K80.	12/27/06	DVT
21	Cost issue.	For cost down, change +1.25VSP solution.	0.3	44	Delete PC111 SE042104K80.	12/27/06	DVT
22	Cost issue.	For cost down, change +1.25VSP solution.	0.3	44	Delete PC112 SE068330K80	12/27/06	DVT
24	Cost issue.	For cost down, change +1.25VSP solution.	0.3	44	Delete PL13 SH000008Y80.	12/27/06	DVT

Version change list (P.I.R. List)

Item	Fixed Issue	Reason for change	Rev.	PG#	Modify List	Date	Phase
1	Cost issue.	For cost down, change +1.25VSP solution.	0.3	44	Delete PC114 SGA20221D30	12/27/06	DVT
2	Cost issue.	For cost down, change +1.25VSP solution.	0.3	44	Change PU9 from SA00001FD80 to SA00001FB80	12/27/06	DVT
3	For SMT BOM convenient.	For SMT BOM convenient.	0.3	40	Change PD14 from SC1H751H010 to SC1B751V010.	12/27/06	DVT
4	Increase _1.5VSP OCP point	Increase _1.5VSP OCP point for +1.25VSP new solution.'	0.3	43	Change PR128 from SD034154280 to SD034374380.	12/27/06	DVT
5	Decrease +1.05VSP OCP point.	Decrease +1.05VSP OCP point.	0.3	44	Change PR145 from SD034324280 to SD034261280		DVT
6	Cost issue.	For cost down, change +1.25VSP solution.	0.3	44	Add PU12 SA000015410.	12/27/06	DVT
7	Cost issue.	For cost down, change +1.25VSP solution.	0.3	44	Add PR188 SD034100280.	12/27/06	DVT
8	Cost issue.	For cost down, change +1.25VSP solution.	0.3	44	Add PR189 SD034100380.	12/27/06	DVT
9	Cost issue.	For cost down, change +1.25VSP solution.	0.3	44	Add PR191 SD034100180.	12/27/06	DVT
10	Cost issue.	For cost down, change +1.25VSP solution.	0.3	44	Add PR190 SD034576080.	12/27/06	DVT
11	Cost issue.	For cost down, change +1.25VSP solution.	0.3	44	Add PC155 SE107105M80.	12/27/06	DVT
12	Cost issue.	For cost down, change +1.25VSP solution.	0.3	44	Add PC156, PC160 SE116226M80	12/27/06	DVT
13	Cost issue.	For cost down, change +1.25VSP solution.	0.3	44	Add PC157 SE075103K80.	12/27/06	DVT
14	Cost issue.	For cost down, change +1.25VSP solution.	0.3	44	Add PC159 SE076104K80.	12/27/06	DVT
15	Increase +1.5VSP output capacitor.	Increase +1.5VSP output capacitor.	0.3	43	Change PC98 from SGA20221D30 to SGA19331D00	12/27/06	DVT
16	Cost issue.	Cost issue.	0.3	44	Change PC118 from SGA20471D00 to SGA19331D00.	12/30/06	DVT
17	BOM issue.	BOM issue.	0.3	45	Change PH3, PH4 from SL210021F20 to SL200000200	12/30/06	DVT
18	Assembly issue.	Due to assemly hard, delete PC42.	0.3	45	Delete PC42 SM22004M210.	12/30/06	DVT
19	Cost issue.	Cost issue.	0.4	42	Change PC73 from SE142475K80 to SE093106M80	01/04/06	DVT
20	Cost issue.	Cost issue.	0.4	42	Change PC73 from SE153106K80 to SE093106M80	01/04/06	DVT
21	Add pull high resister for VAGTE.	Add pull high resister for VAGTE.	0.4	45	Add PR89 SD034200180(S RES 1/16W 2K 0402 1%)	01/04/06	DVT
22	Delete PQ46	PQ46 has potemtial risk to cause system battery OVP.	0.4	40	Delete PQ46 SB324110010(S TR 2SC411K)	01/04/06	DVT
23	Material shipping issue.	Material shipping issue.	0.4	45	Change PC69, PC70, PC71, PC72 from SE068102J80 to SE074102K80	01/04/06	DVT

Version change list (P.I.R. List)

Item	Fixed Issue	Reason for change	Rev.	PG#	Modify List	Date	Phase
1	Cost down	Cost down	0.5	40	Change PQ38 from SB548100020 to SB548000310.	03/09/07	PVT
2	Cost down	Cost down	0.5	40	Change PQ40 from SB548100020 to SB548000310.	03/09/07	PVT
3	For EMI board band issue.	For EMI board band issue.	0.6	40	Add PR199 SD001470B80(S RES 1/4W 4.7 1206 +-5%)	04/01/07	Pre-MP
4	For EMI board band issue.	For EMI board band issue.	0.6	40	Add PC163 SE074681K80(S CER CAP 680P 50V K X7R)	04/01/07	Pre-MP
5							
6							
7							
8							
9							
10							
11							
12							
13							
14							
15							
16							
17							
18							
19							
20							
21							
22							
23							