R:100~149
C:100~149

nCS0 : NROM_CS0
nCS1 : NRAM_CS1
nCS2 : NDSCM_CS2
nCS3 : NLCDM_CS3
nCS4 : NMELODY_CS4

VRRTC1(1.8V,1.4V)==>VDDS-RTC,VDD-RTC
VRIO1,2(2.8V)==>VDDS-1,VDDS-2,VDDANG
VRABB(2.8V)==>VRABB

JP100: 1,2 = 100k (security)
JP100: 2, 3 = 0 ohm(non-security)

HERCROM400G2

U100

Acoustic test point (MCSI)

BenQ Corporation

Project Code	Model Name	OEM/ODM Model Name
99.G9721.001	56E22	OBM

Title: MAIN

Size	PCB P/N	PCB Rev.	Document Number	Rev.
A4	48.G9701.A01	V3	99.G9721.000-C3-304-001	0

Date: Tuesday, March 29, 2005 Sheet 1 of 11

Prepared By	Reviewed By	Approved By
Hoping Lee	Kaku Kuo	Pat Hsu

BenQ Confidential Justin Ko 2005-04-22 08:04:35

C:150~199
R:150~199

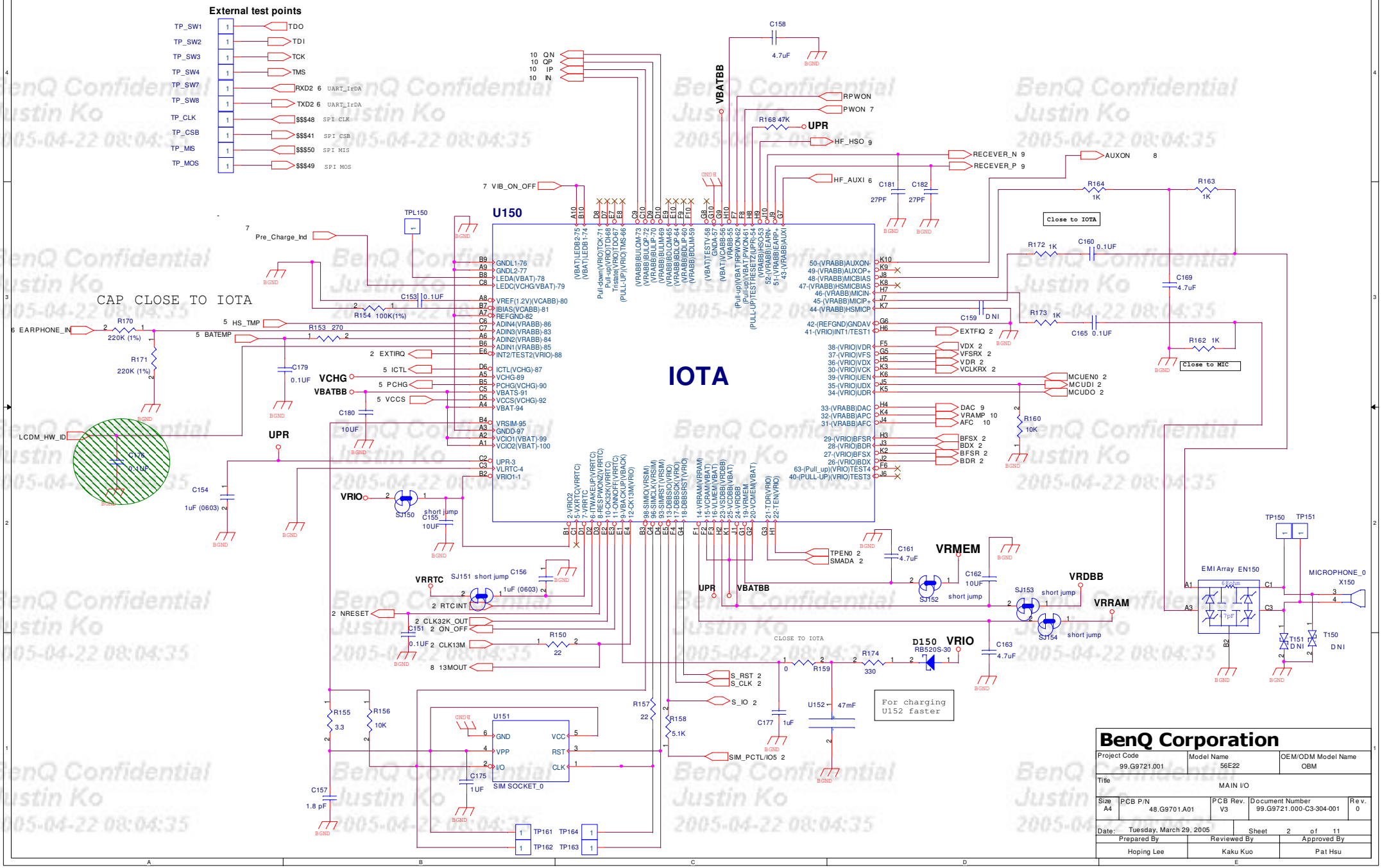

BenQ Corporation

Project Code	Model Name	OEM/ODM Model Name
99.G9721.001	56E22	OBM

Title: MAIN I/O

Size	PCB P/N	PCB Rev.	Document Number	Rev.
A4	48.G9701.A01	V3	99.G9721.000-C3-304-001	0

Date: Tuesday, March 29, 2005 Sheet 2 of 11

Prepared By	Reviewed By	Approved By
Hoping Lee	Kaku Kuo	Pat Hsu

BenQ Confidential
Justin Ko
2005-04-22 08:04:35

R:200~249
C:200~249

Replace VBAT by VRMEM

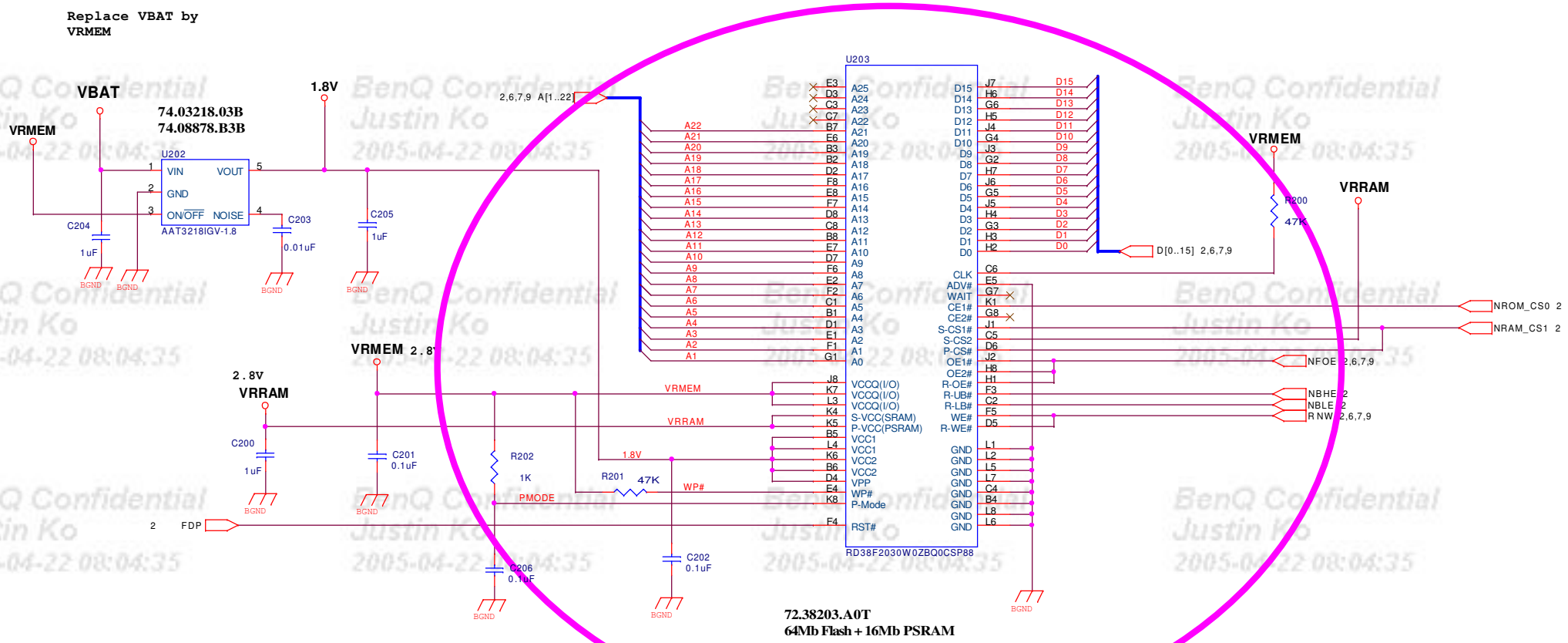

BenQ Corporation			
Project Code 99.G9721.001	Model Name 56E22	OEM/ODM Model Name OBM	
Title EXTERNAL FLASH			
Size A4	PCB P/N 48.G9701.A01	PCB Rev. V3	Document Number 99.G9721.000-C3-304-001 Rev. 0
Date: Tuesday, March 29, 2005	Sheet 3 of 11		
Prepared By Hoping Lee	Reviewed By Kaku Kuo	Approved By Pat Hsu	

BenQ Confidential Justin Ko 2005-04-22 08:04:35

R: 250~299
C: 250~299

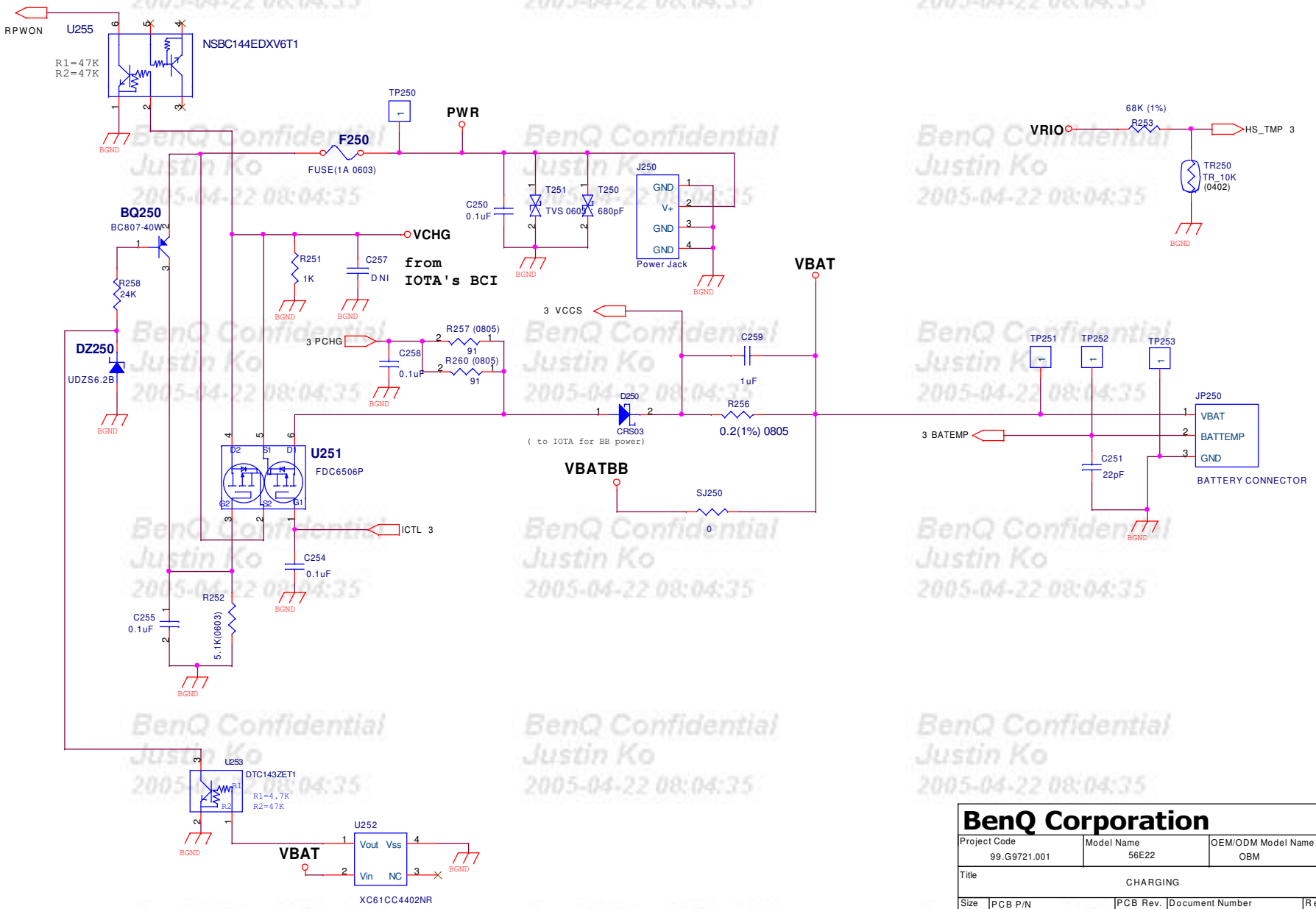

BenQ Corporation

Project Code	Model Name	OEM/ODM Model Name
99.G9721.001	56E22	OBM

Title: CHARGING

Size	PCB P/N	PCB Rev.	Document Number	Rev.
A4	48.G9701.A01	V3	99.G9721.000-C3-304-001	0

Date: Tuesday, March 29, 2005 Sheet 4 of 11

Prepared By	Reviewed By	Approved By
Hoping Lee	Kaku Kuo	Pat Hsu

BenQ Confidential
Justin Ko
2005-04-22 08:04:35

C:300~324
R:300~324

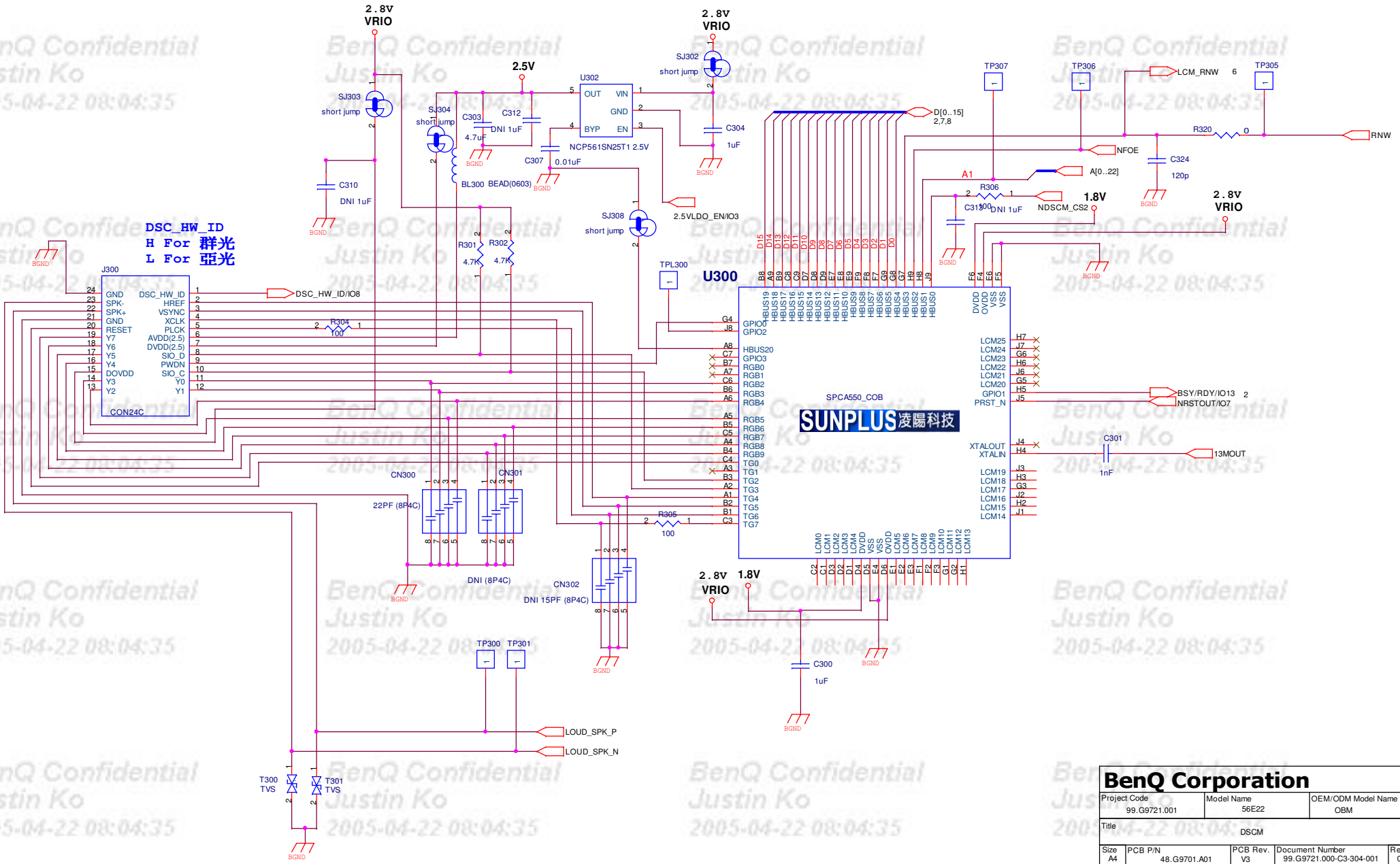

BenQ Corporation

Project Code	Model Name	OEM/ODM Model Name
99.G9721.001	56E22	OBM

Title: DSCM

Size	PCB P/N	PCB Rev.	Document Number	Rev.
A4	48.G9701.A01	V3	99.G9721.000-C3-304-001	0

Date: Tuesday, March 29, 2005 Sheet 5 of 11

Prepared By	Reviewed By	Approved By
Hoping Lee	Kaku Kuo	Pat Hsu

BenQ Confidential Justin Ko 2005-04-22 08:04:35

C:325~349
R:325~349

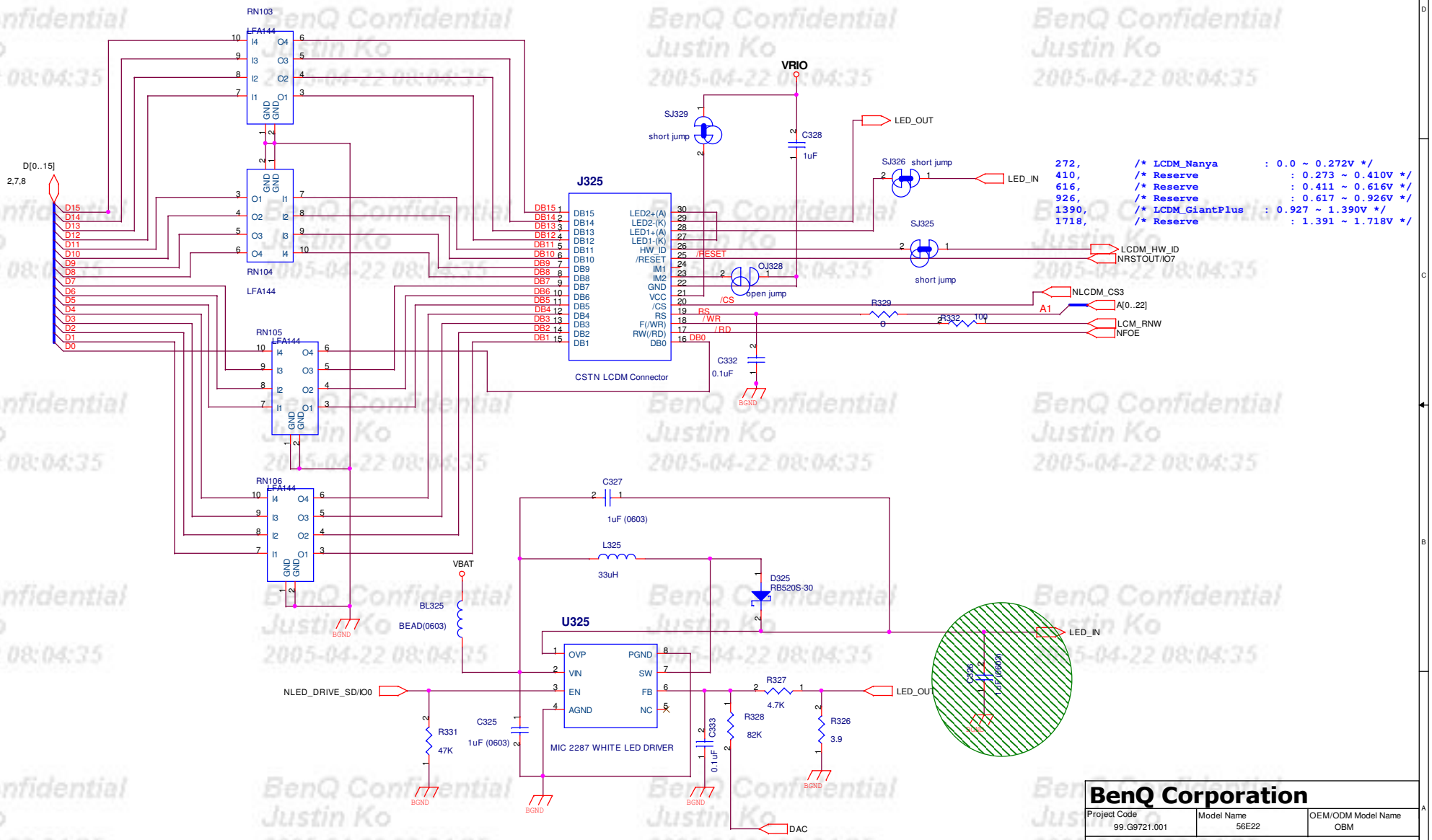

BenQ Corporation

Project Code	Model Name	OEM/ODM Model Name
99.G9721.001	56E22	OBM

Title: LCDM & LED DRIVER

Size	PCB P/N	PCB Rev.	Document Number	Rev.
A4	48.G9701.A01	V3	99.G9721.000-C3-304-001	0

Date: Tuesday, March 29, 2005 Sheet 6 of 11

Prepared By	Reviewed By	Approved By
Hoping Lee	Kaku Kuo	Pat Hsu

BenQ Confidential
Justin Ko
2005-04-22 08:04:35

C:350~399
R:350~399

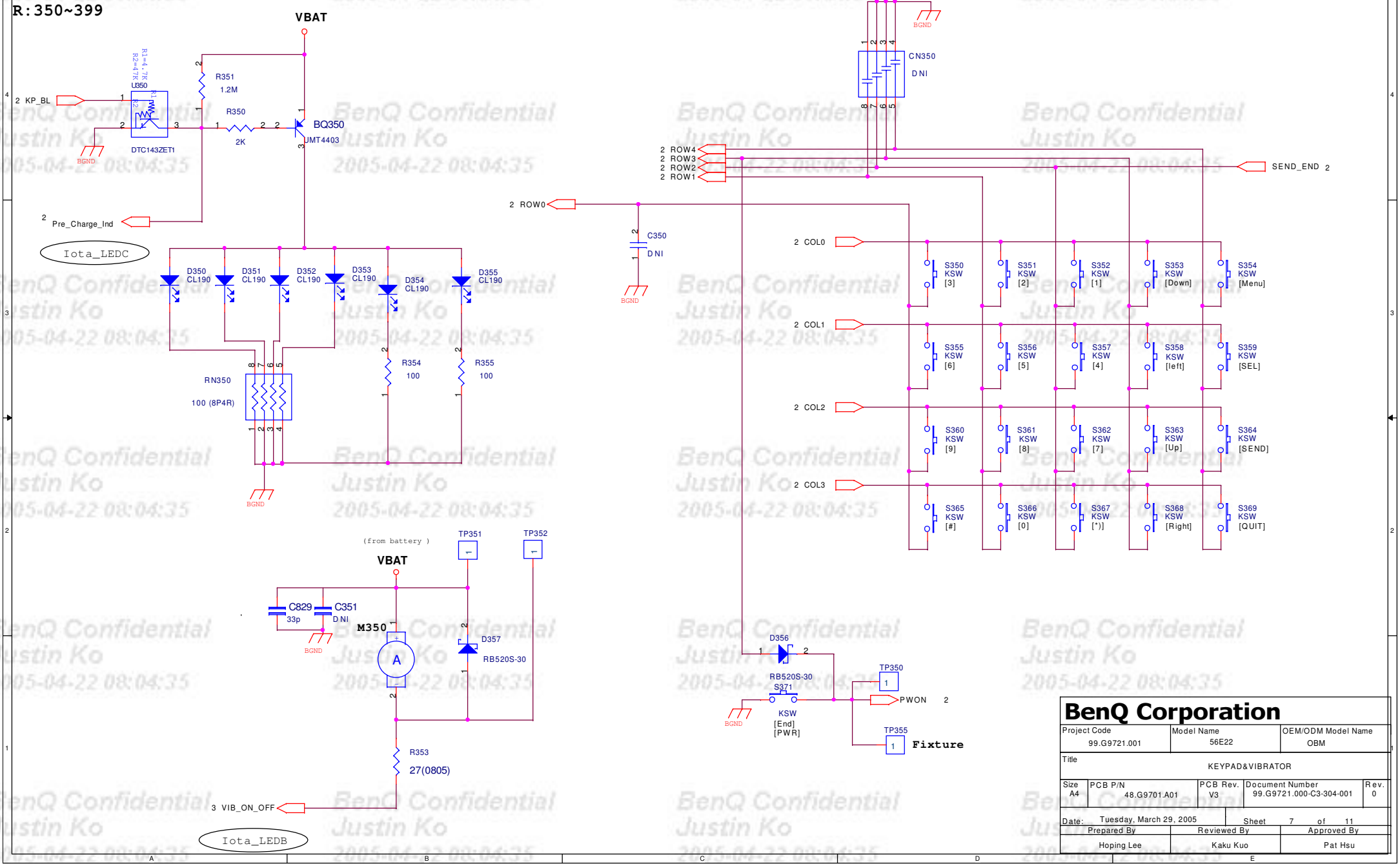

BenQ Corporation

Project Code	Model Name	OEM/ODM Model Name
99.G9721.001	56E22	OBM

Title: KEYPAD&VIBRATOR

Size	PCB P/N	PCB Rev.	Document Number	Rev.
A4	48.G9701.A01	V3	99.G9721.000-C3-304-001	0

Date: Tuesday, March 29, 2005 Sheet 7 of 11

Prepared By	Reviewed By	Approved By
Hoping Lee	Kaku Kuo	Pat Hsu

BenQ Confidential Justin Ko 2005-04-22 08:04:35

R:400~449
C:400~449

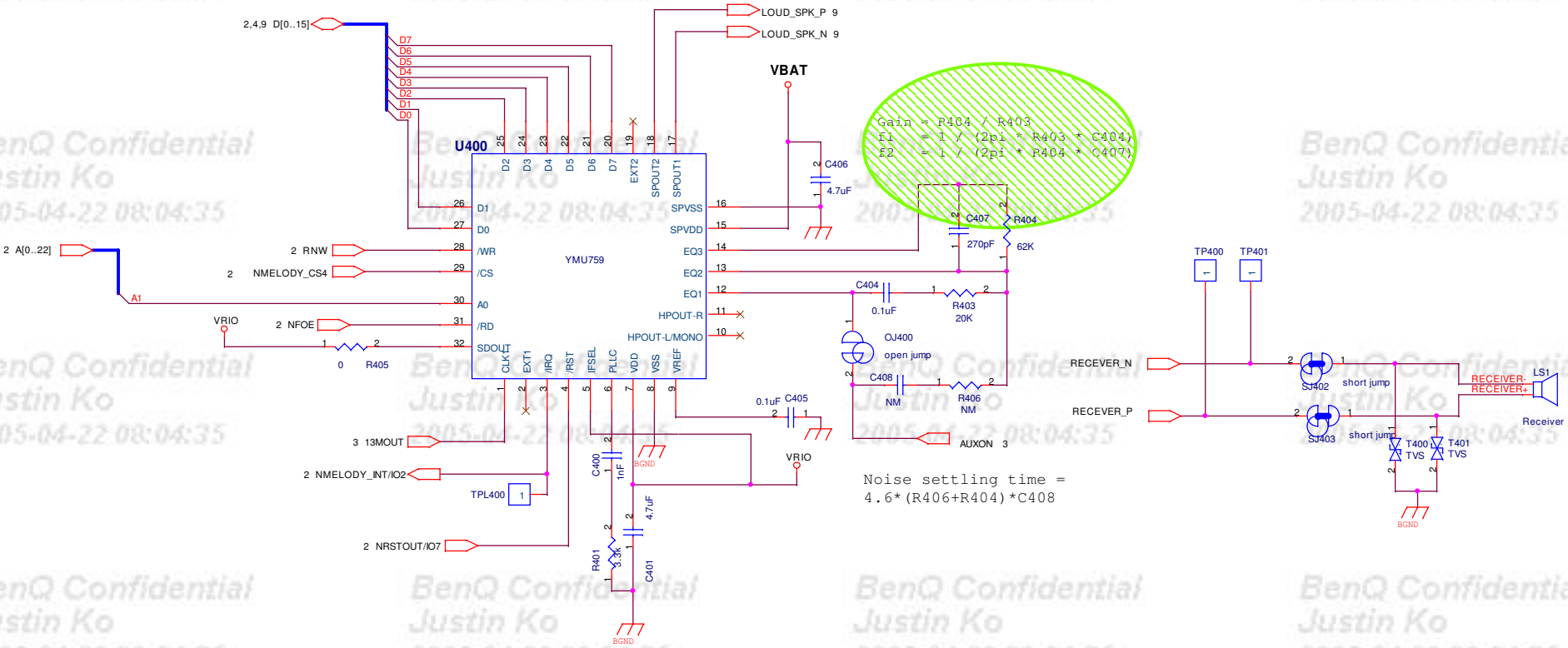

BenQ Corporation

Project Code	Model Name	OEM/ODM Model Name
99.G9721.001	56E22	OBM

Title: MELODY&AUDIO PART

Size	PCB P/N	PCB Rev.	Document Number	Rev.
A4	48.G9701.A01	V3	99.G9721.000-C3-304-001	0

Date: Tuesday, March 29, 2005 Sheet 8 of 11

Prepared By	Reviewed By	Approved By
Hoping Lee	Kaku Kuo	Pat Hsu

BenQ Confidential
Justin Ko
2005-04-22 08:04:35

R:450~499
C:450~499

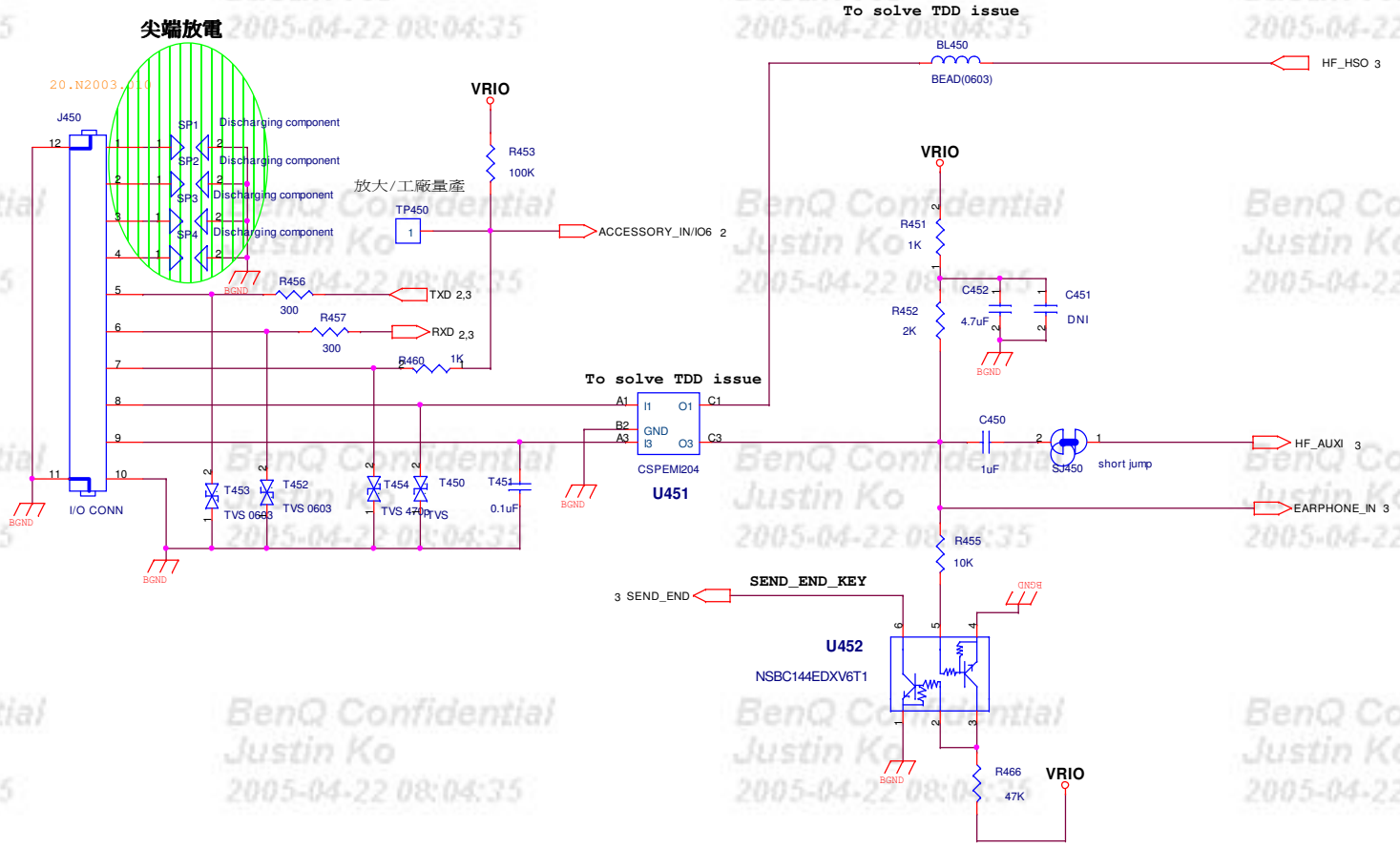

After ACCESSORY_IN detect L
Then EARPHONE_IN (ADIN3) monitor the Voltage
If 0.8V < ADIN3 < 1.2V Define : Handsfree
0.5V < ADIN3 < 0.65V Define : DataCable

BenQ Corporation

Project Code	Model Name	OEM/ODM Model Name
99.G9721.001	56E22	OBM

Title: MELODY&AUDIO PART

Size	PCB P/N	PCB Rev.	Document Number	Rev.
A4	48.G9701.A01	V3	99.G9721.000-C3-304-001	0

Date: Tuesday, March 29, 2005 Sheet 9 of 11

Prepared By	Reviewed By	Approved By
Hoping Lee	Kaku Kuo	Pat Hsu

BenQ Confidential Justin Ko 2005-04-22 08:04:35

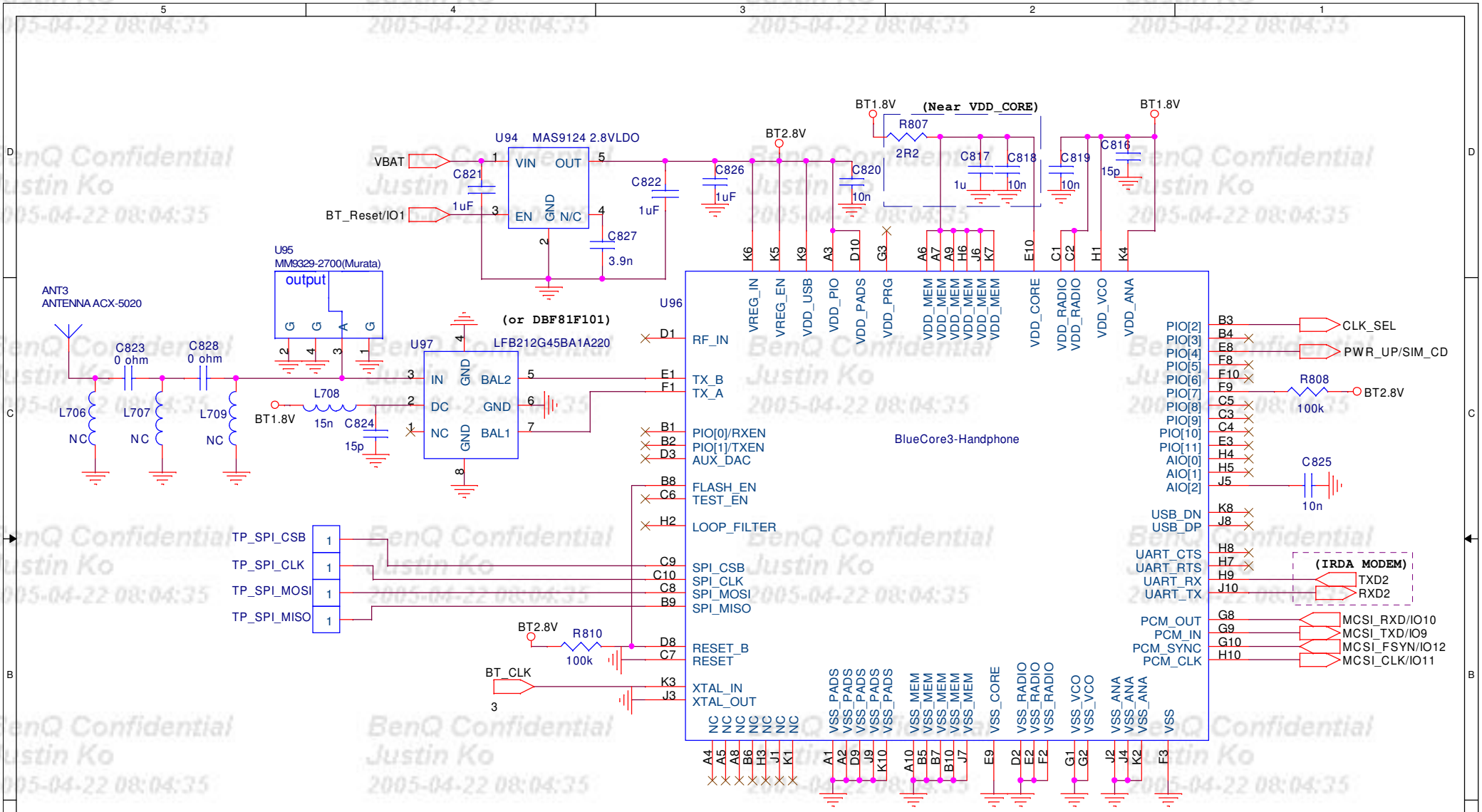

BenQ Corporation

Project Code	Model Name	OEM/ODM Model Name
99.G9721.001	56E22	OBM

Title: Bluetooth Part

Size	PCB P/N	PCB Rev.	Document Number	Rev.
A4	48.G9701.A01	V3	99.G9721.000-C3-304-001	0

Date: Tuesday, March 29, 2005 Sheet 10 of 11

Prepared By	Reviewed By	Approved By
Hoping Lee	Kaku Kuo	Pat Hsu

BenQ Confidential Justin Ko 2005-04-22 08:04:35

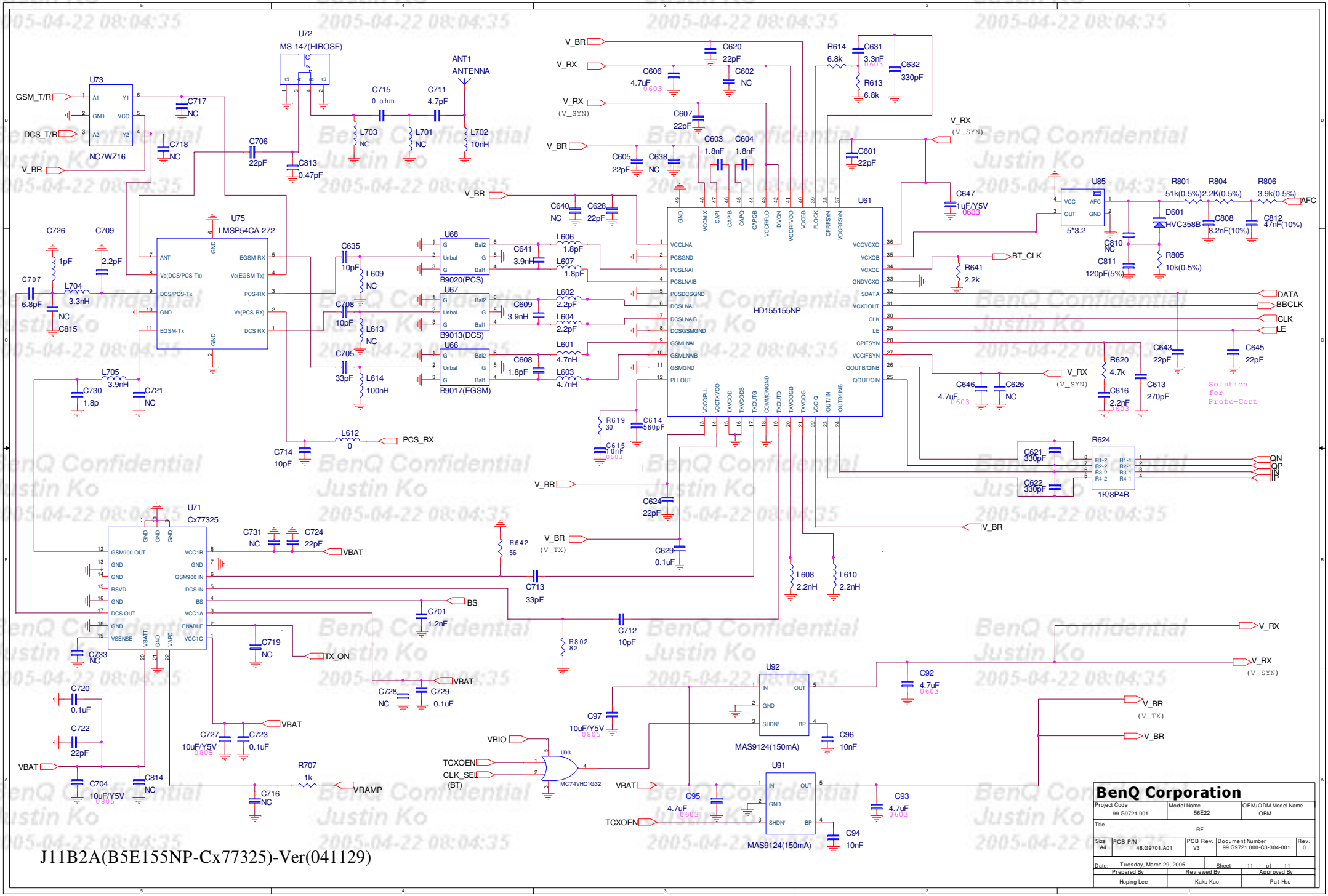

J11B2A(B5E155NP-Cx77325)-Ver(041129)

BenQ Corporation

Project Code	Model Name	OEM/ODM Model Name
99.G9721.001	56E22	OBM

Title: RF

Size	PCB P/N	PCB Rev.	Document Number	Rev.
A4	48.G9701.A01	V3	99.G9721.000-C3-304-001	0

Date: Tuesday, March 29, 2005 Sheet 11 of 11

Prepared By	Reviewed By	Approved By
Hoping Lee	Kaku Kuo	Pat Hsu

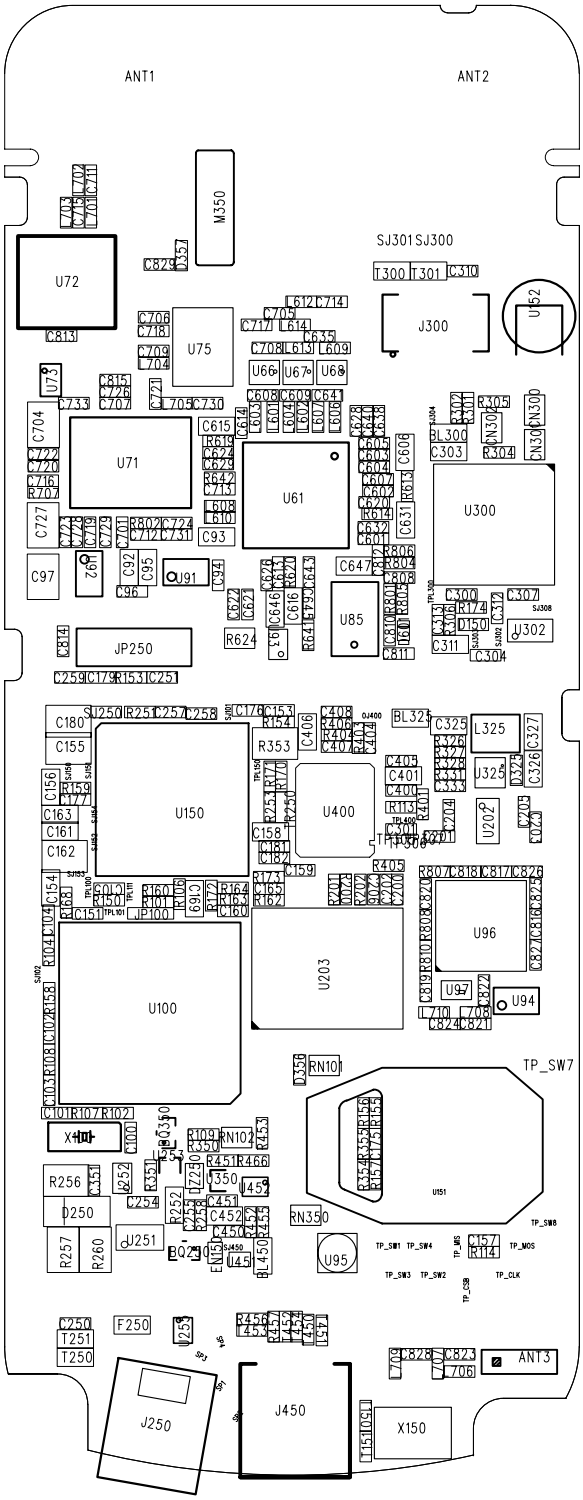

BenQ	Layer: REFERENCE TOP	File Name: J11 B2A V2	
	Project Code: 99.G9721.001	Date: 2005/02/22	Rev: V1
	Modle No.: 56E22	Doc.No: 99.G9721.000-C3-305-001	Rev: 0
	Part No.: 48.G9701.A01	Sheet 17 of 20	

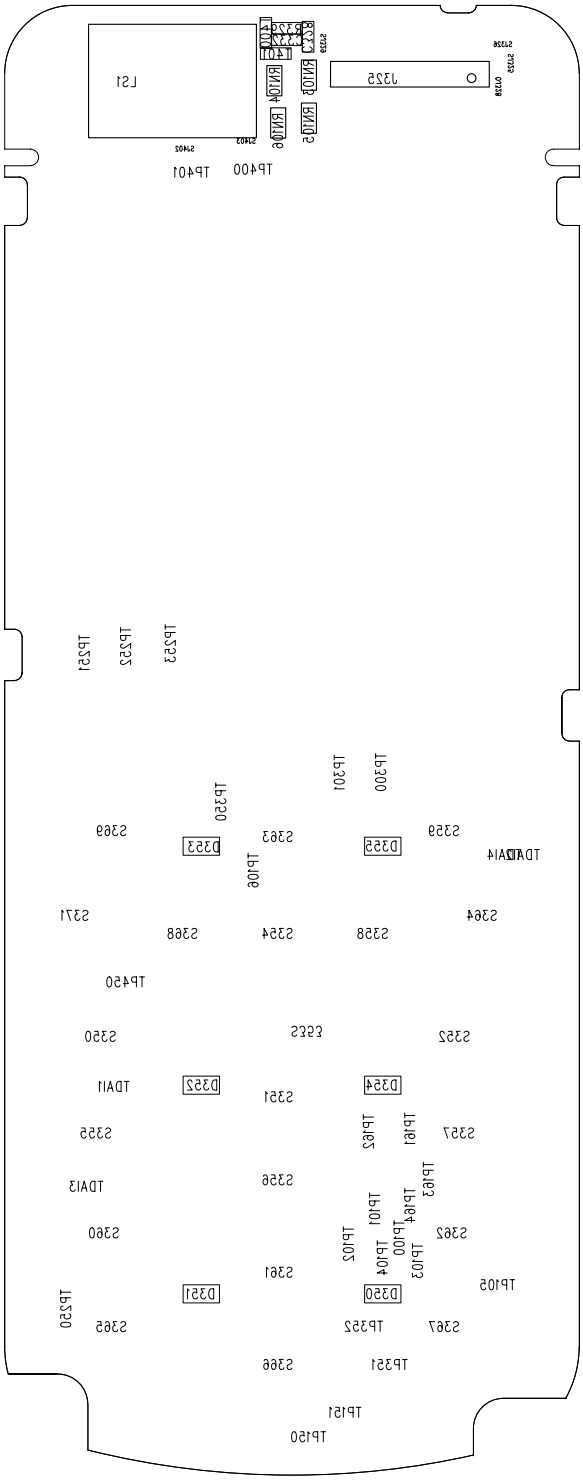

BenQ	Layer: REFERENCE BOTTOM	File Name: J11 B2A V2	
	Project Code: 99.G9721.001	Date: 2005/02/22	Rev: V1
	Modle No.: 56E22	Doc.No: 99.G9721.000-C3-305-001	Rev: 0
	Part No.: 48.G9701.A01	Sheet 18 of 20	