Manchester 200Z LA-1731 REV 1.0 Schematics Document

Intel Pentium 4 Processor it the 478-pin Package with 845PE / ICH4 chipset

Compal Electronics, Ltd.		
Title: Cover Sheet		
Size: B	Document Number: LA1731	Rev: 1.0
Date: ¬P期二, 十二月 31, 2002	Sheet 1 of 46	

COMPAL CONFIDENTIAL

MODEL NAME : Manchester 200Z LA-1731

REV:0.1

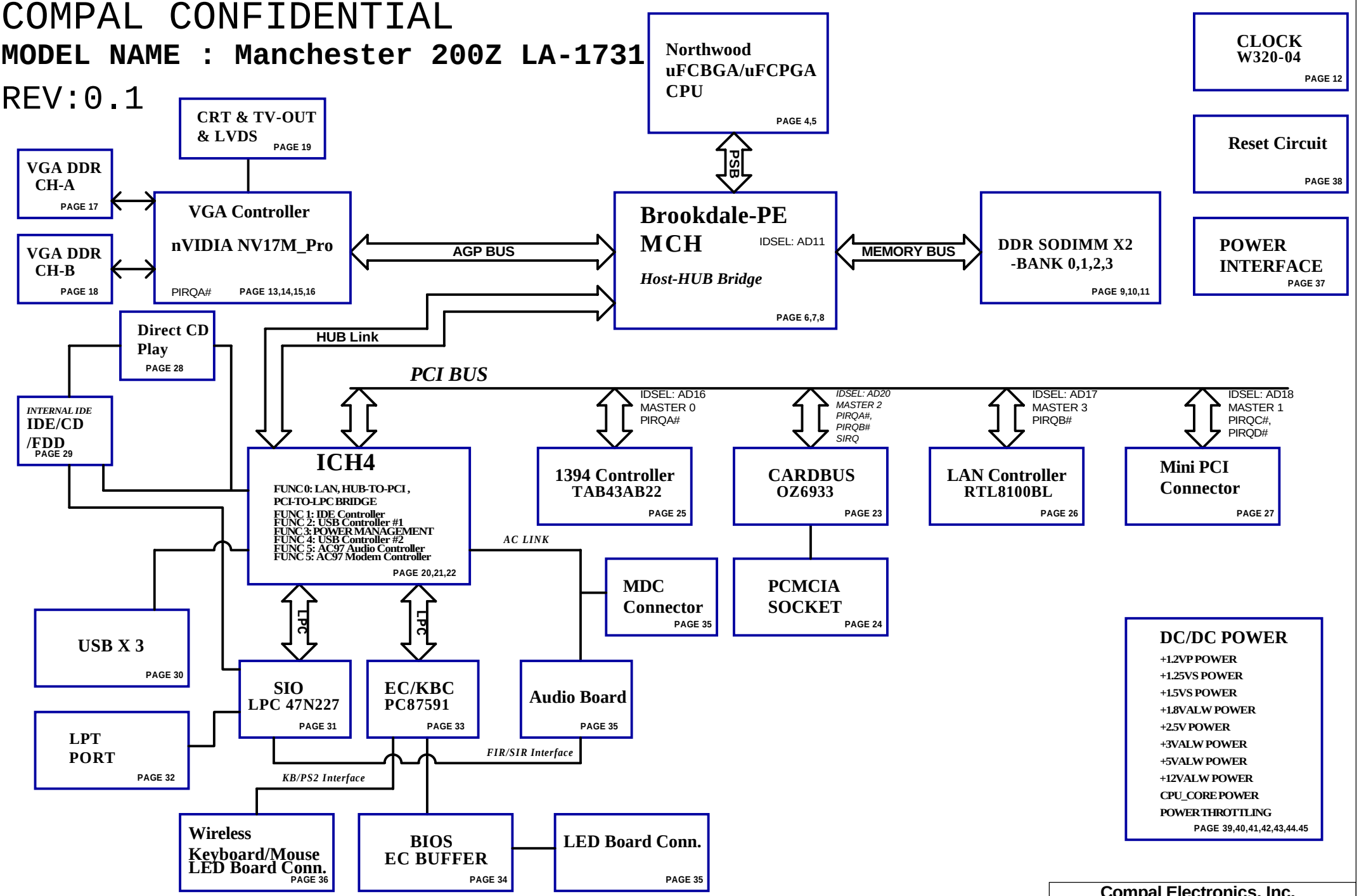

PROPRIETARY NOTE THIS SHEET OF ENGINEERING DRAWING IS THE PROPRIETARY PROPERTY OF COMPAL ELECTRONICS, INC. AND CONTAINS CONFIDENTIAL AND TRADE SECRET INFORMATION. THIS SHEET MAY NOT BE TRANSFERRED FROM THE CUSTODY OF THE COMPETENT DIVISION OF R&D DEPARTMENT EXCEPT AS AUTHORIZED BY COMPAL ELECTRONICS, INC. NEITHER THIS SHEET NOR THE INFORMATION IT CONTAINS MAY BE USED BY OR DISCLOSED TO ANY THIRD PARTY WITHOUT PRIOR WRITTEN CONSENT OF COMPAL ELECTRONICS, INC.

Compal Electronics, Inc.		
Title: ATR80 COVER SHEET		
Size: B	Document Number: LA1731	Rev: 1.0
Date: ¬P期二, 十二月 31, 2002	Sheet 2 of 46	

Voltage Rails

Power Plane	Description	S1	S3	S5
VIN	Adapter power supply (19V)	N/A	N/A	N/A
B+	AC or battery power rail for power circuit.	N/A	N/A	N/A
+CPU_VCC	Core voltage for CPU	ON	OFF	OFF
+1.2VP	1.2V switched power rail for CPU AGTL Bus	ON	OFF	OFF
+1.25VS	1.25V switched power rail	ON	OFF	OFF
+1.5VS	AGP 4X	ON	OFF	OFF
+1.8VALW	1.8V power rail	ON	ON	ON*
+1.8VS	1.8V switched power rail	ON	OFF	OFF
+2.5V	2.5V power rail	ON	ON	OFF
+2.5VS	2.5V switched power rail	ON	OFF	OFF
+3VALW	3.3V always on power rail	ON	ON	ON*
+3V	3.3V power rail	ON	ON	OFF
+3VS	3.3V switched power rail	ON	OFF	OFF
+5VALW	5V always on power rail	ON	ON	ON*
+5V	5V power rail	ON	ON	OFF
+5VS	5V switched power rail	ON	OFF	OFF
+12VALW	12V always on power rail	ON	ON	ON*
RTCVCC	RTC power	ON	ON	ON
		ON	ON	ON

Note : ON* means that this power plane is ON only with AC power available, otherwise it is OFF.

External PCI Devices

Device	IDSEL#	REQ#/GNT#	Interrupts
VGA			PIRQA
CardBus	AD20	2	PIRQA/PIRQB
LAN	AD17	3	PIRQB
Mini-PCI	AD18	1/4	PIRQC/PIRQD
1394	AD16	0	PIRQA

EC SM Bus1 address

Device	Address
Smart Battery	0001 011X b
EEPROM(24C16/02)	1010 000X b
(24C04)	1011 000Xb

EC SM Bus2 address

Device	Address
MAX1617MEE	1001 110X b
OZ163	0011 0100 b
Smart Battery	0001 011X b
Docking	0011 011X b
DOT Board	XXXX XXXXb

ICH4 SM Bus address

Device	Address
Clock Generator (ICS9508-10)	1101 001X

Board ID Table for AD channel

Vcc	3.3V +/- 5%
Ra	100K +/- 5%

Board ID	Rb	V_{AD_BID} min	V_{AD_BID} typ	V_{AD_BID} max
0	0	0 V	0 V	0 V
1	8.2K +/- 5%	0.216 V	0.250 V	0.289 V
2	18K +/- 5%	0.436 V	0.503 V	0.538 V
3	33K +/- 5%	0.712 V	0.819 V	0.875 V
4	56K +/- 5%	1.036 V	1.185 V	1.264 V
5	100K +/- 5%	1.453 V	1.650 V	1.759 V
6	200K +/- 5%	1.935 V	2.200 V	2.341 V
7	NC	2.500 V	3.300 V	3.300 V

Board ID	PCB Revision
0	0.1
1	1.0
2	
3	
4	
5	
6	
7	

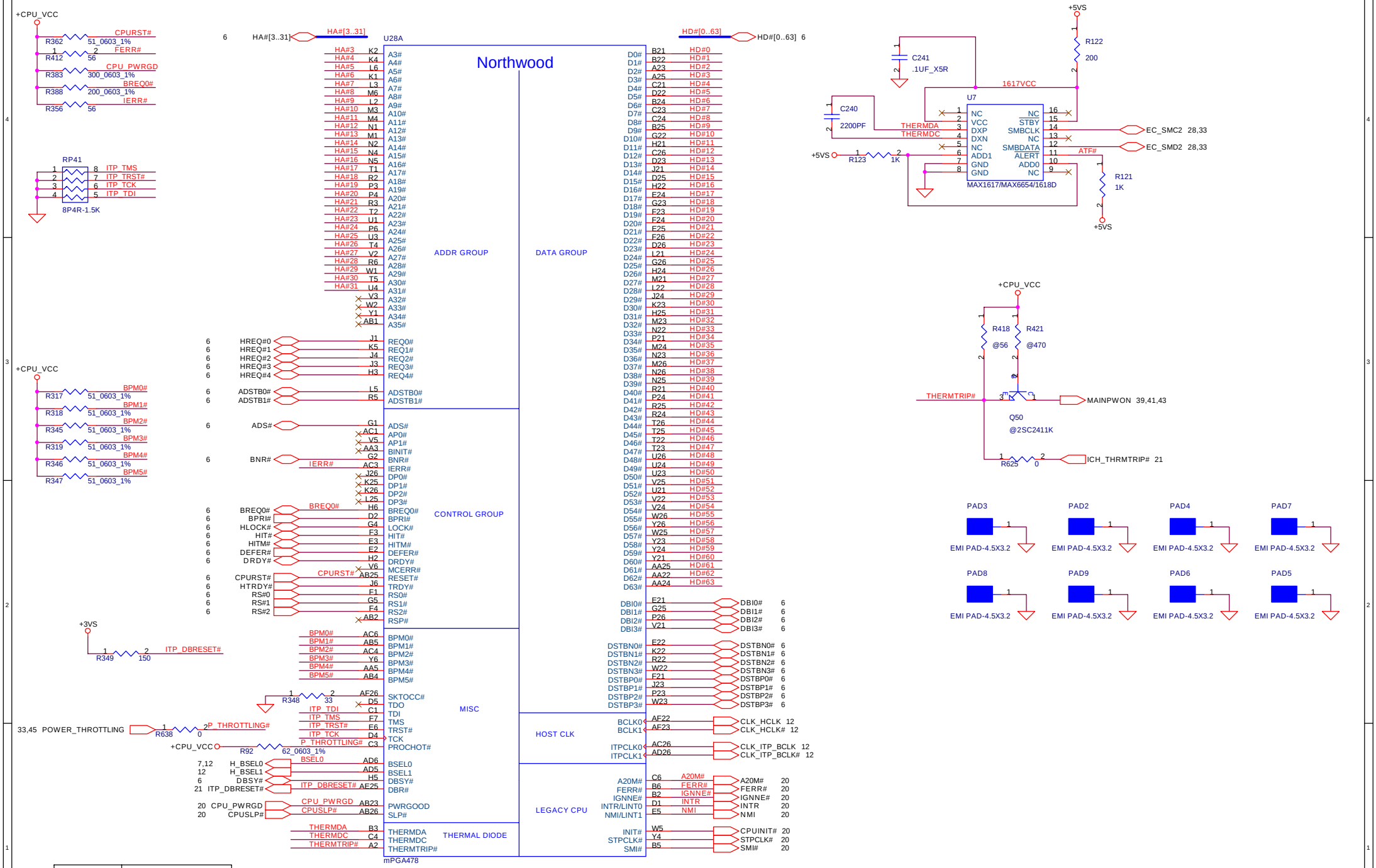

SELPSB[1:0]	STSEM BUS FREQUENCY
00	100MHZ
01	133MHZ
10	RESERVED
11	RESERVED

PROPRIETARY NOTE THIS SHEET OF ENGINEERING DRAWING IS THE PROPRIETARY PROPERTY OF COMPAL ELECTRONICS, INC. AND CONTAINS CONFIDENTIAL AND TRADE SECRET INFORMATION. THIS SHEET MAY NOT BE TRANSFERRED FROM THE CUSTODY OF THE COMPETENT DIVISION OF R&D DEPARTMENT EXCEPT AS AUTHORIZED BY COMPAL ELECTRONICS, INC. NEITHER THIS SHEET NOR THE INFORMATION IT CONTAINS MAY BE USED BY OR DISCLOSED TO ANY THIRD PARTY WITHOUT PRIOR WRITTEN CONSENT OF COMPAL ELECTRONICS, INC.

Compal Electronics, Inc.

Title: Pentium 4/Northwood Processor in mPGA478

Size: B | Document Number: LA1731 | Rev: 1.0

Date: ¬P期二, 十二月 31, 2002 | Sheet 4 of 46

PROPRIETARY NOTE THIS SHEET OF ENGINEERING DRAWING IS THE PROPRIETARY PROPERTY OF COMPAL ELECTRONICS, INC. AND CONTAINS CONFIDENTIAL AND TRADE SECRET INFORMATION. THIS SHEET MAY NOT BE TRANSFERRED FROM THE CUSTODY OF THE COMPETENT DIVISION OF R&D DEPARTMENT EXCEPT AS AUTHORIZED BY COMPAL ELECTRONICS, INC. NEITHER THIS SHEET NOR THE INFORMATION IT CONTAINS MAY BE USED BY OR DISCLOSED TO ANY THIRD PARTY WITHOUT PRIOR WRITTEN CONSENT OF COMPAL ELECTRONICS, INC.

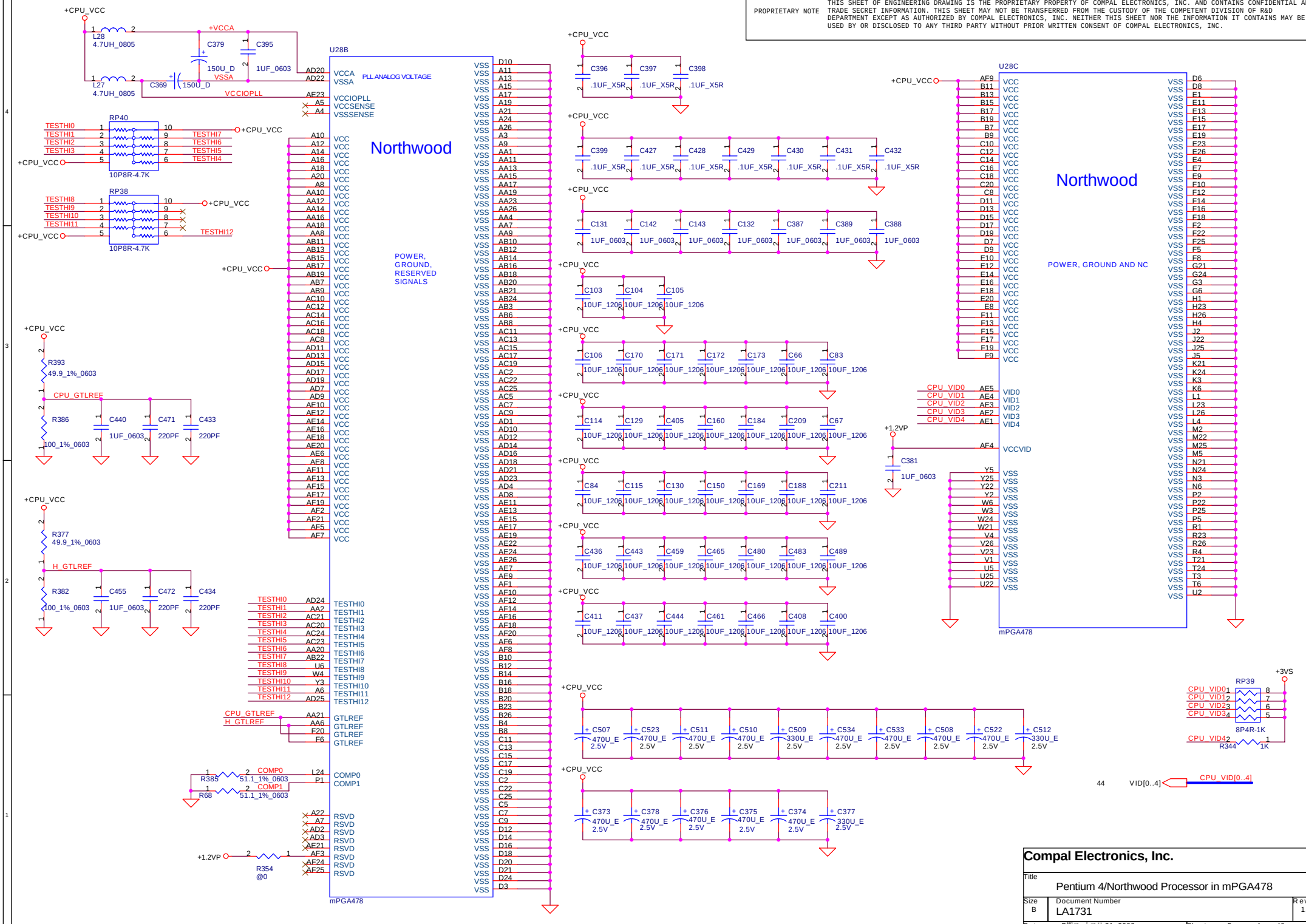

Compal Electronics, Inc.	
Title	Pentium 4/Northwood Processor in mPGA478
Size B	Document Number LA1731
Rev	1.0
Date: ¬P期二, 十二月 31, 2002	Sheet 5 of 46

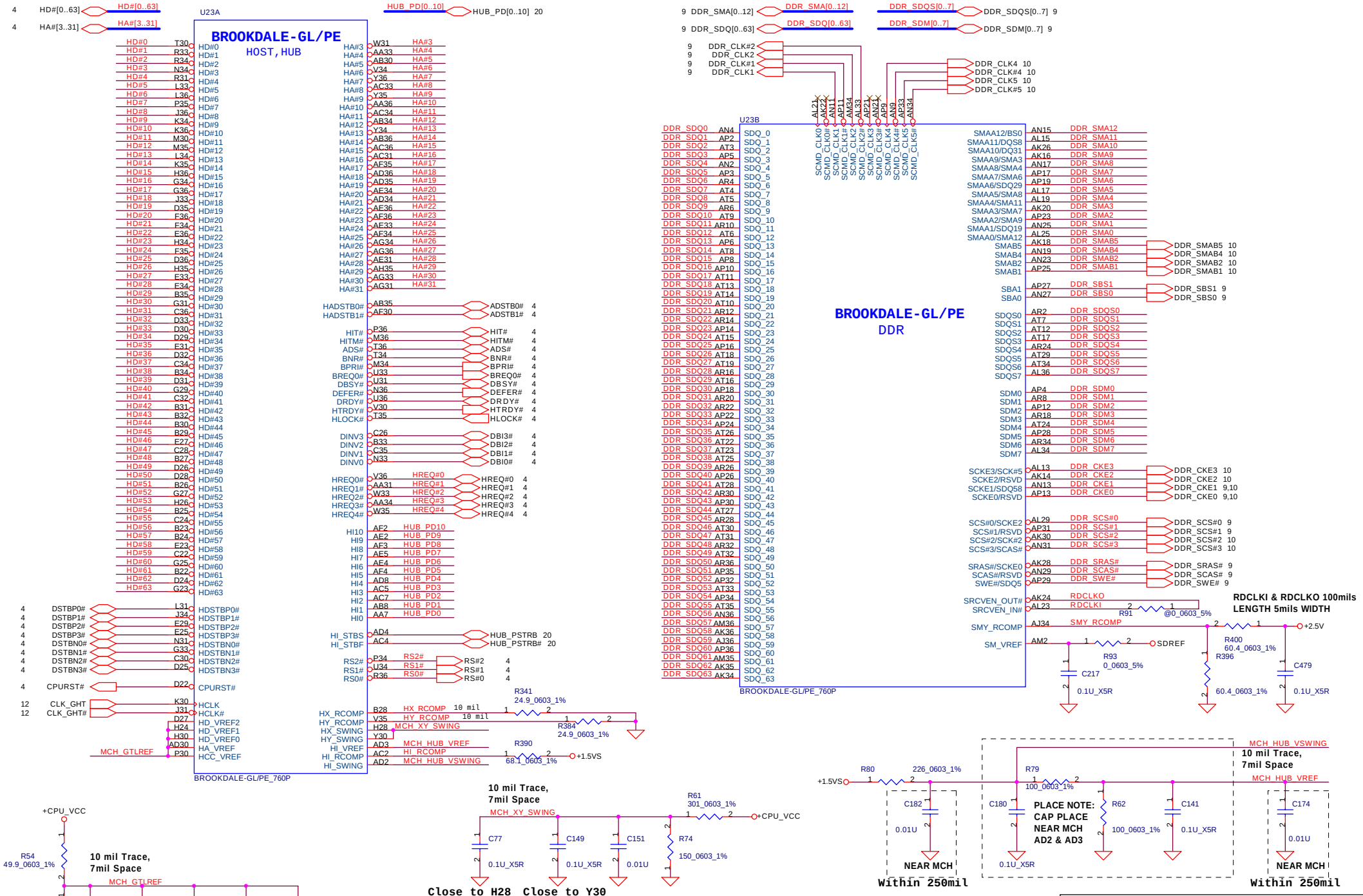

PROPRIETARY NOTE THIS SHEET OF ENGINEERING DRAWING IS THE PROPRIETARY PROPERTY OF COMPAL ELECTRONICS, INC. AND CONTAINS CONFIDENTIAL AND TRADE SECRET INFORMATION. THIS SHEET MAY NOT BE TRANSFERRED FROM THE CUSTODY OF THE COMPETENT DIVISION OF R&D DEPARTMENT EXCEPT AS AUTHORIZED BY COMPAL ELECTRONICS, INC. NEITHER THIS SHEET NOR THE INFORMATION IT CONTAINS MAY BE USED BY OR DISCLOSED TO ANY THIRD PARTY WITHOUT PRIOR WRITTEN CONSENT OF COMPAL ELECTRONICS, INC.

Compal Electronics, Inc.			
Title	Brookdale-GL/PE(1/3)		
Size B	Document Number LA1731		Rev 1.0
Date: ¬P期三, 十二月 31, 2002		Sheet 6 of 46	

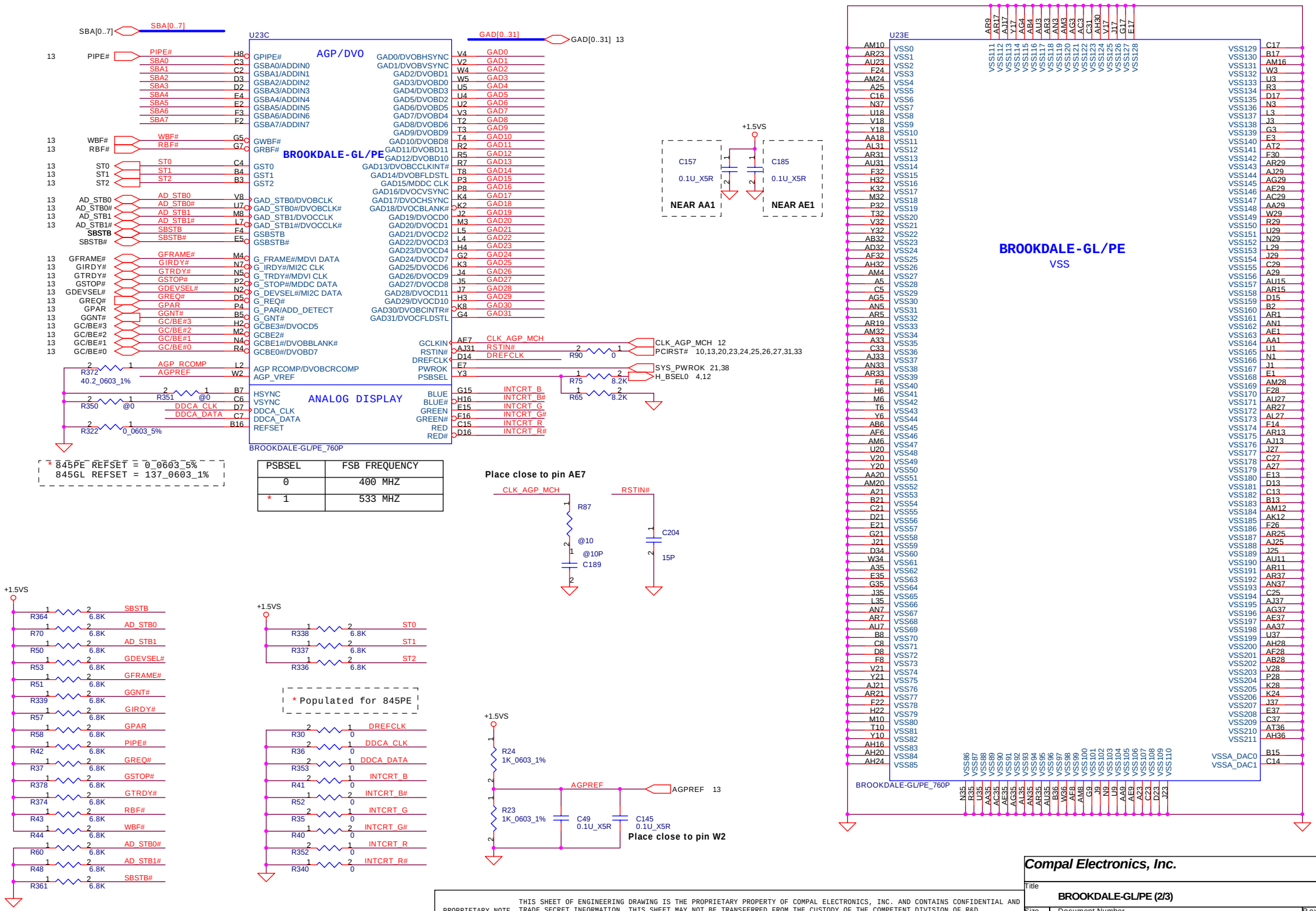

PROPRIETARY NOTE THIS SHEET OF ENGINEERING DRAWING IS THE PROPRIETARY PROPERTY OF COMPAL ELECTRONICS, INC. AND CONTAINS CONFIDENTIAL AND TRADE SECRET INFORMATION. THIS SHEET MAY NOT BE TRANSFERRED FROM THE CUSTODY OF THE COMPETENT DIVISION OF R&D DEPARTMENT EXCEPT AS AUTHORIZED BY COMPAL ELECTRONICS, INC. NEITHER THIS SHEET NOR THE INFORMATION IT CONTAINS MAY BE USED BY OR DISCLOSED TO ANY THIRD PARTY WITHOUT PRIOR WRITTEN CONSENT OF COMPAL ELECTRONICS, INC.

Compal Electronics, Inc.	
Title	BROOKDALE-GL/PE (2/3)
Size B	Document Number LA1731
Rev	1.0
Date: ¬P期二, 十二月 31, 2002	Sheet 7 of 46

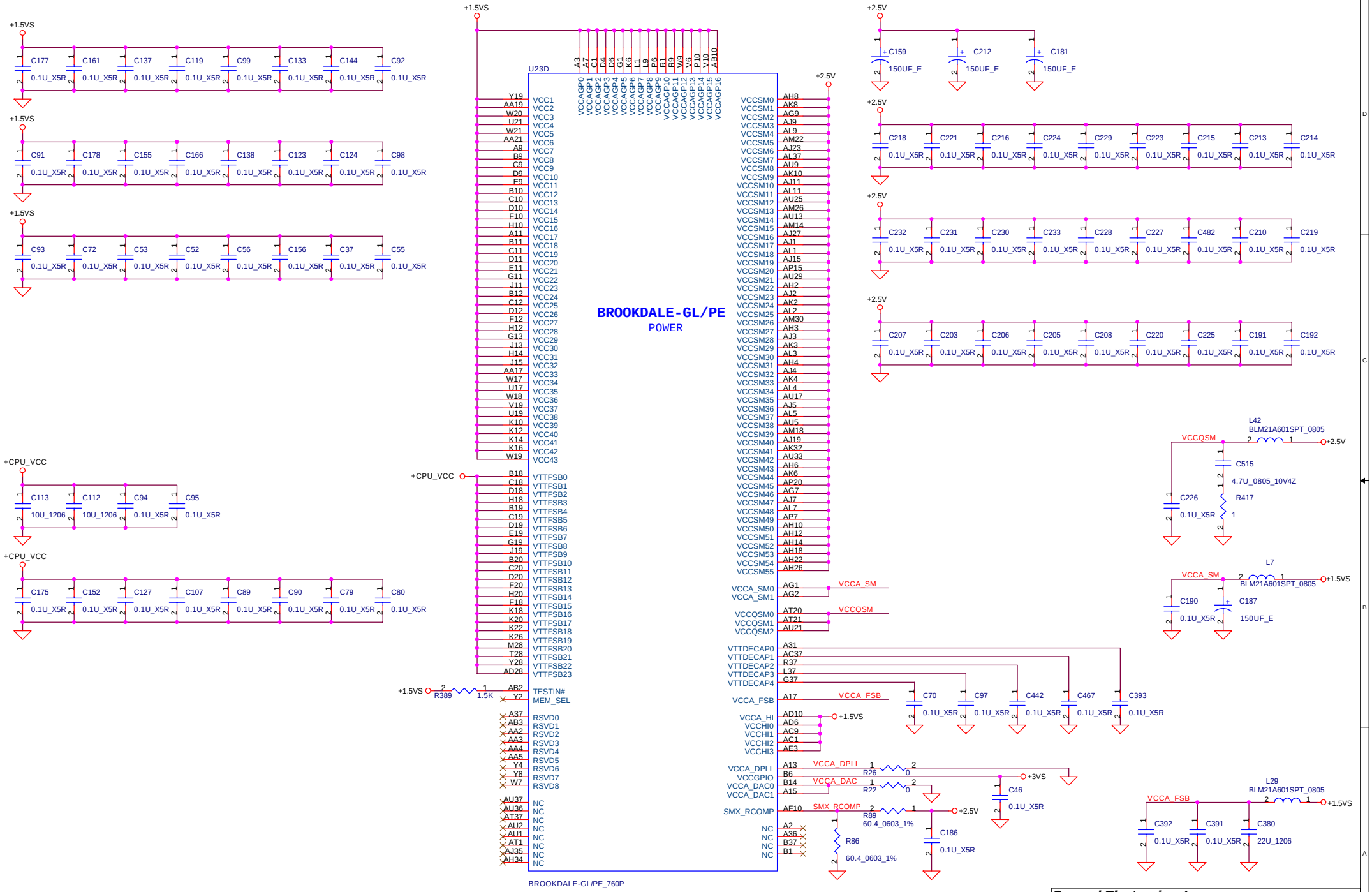

PROPRIETARY NOTE

THIS SHEET OF ENGINEERING DRAWING IS THE PROPRIETARY PROPERTY OF COMPAL ELECTRONICS, INC. AND CONTAINS CONFIDENTIAL AND TRADE SECRET INFORMATION. THIS SHEET MAY NOT BE TRANSFERRED FROM THE CUSTODY OF THE COMPETENT DIVISION OF R&D DEPARTMENT EXCEPT AS AUTHORIZED BY COMPAL ELECTRONICS, INC. NEITHER THIS SHEET NOR THE INFORMATION IT CONTAINS MAY BE USED BY OR DISCLOSED TO ANY THIRD PARTY WITHOUT PRIOR WRITTEN CONSENT OF COMPAL ELECTRONICS, INC.

Compal Electronics, Inc.

Title: **BROOKDALE-GL/PE (3/3)**

Size	Document Number	Rev
B	LA1731	1.0

Date: ¬P期二, 十二月 31, 2002 | Sheet 8 of 46

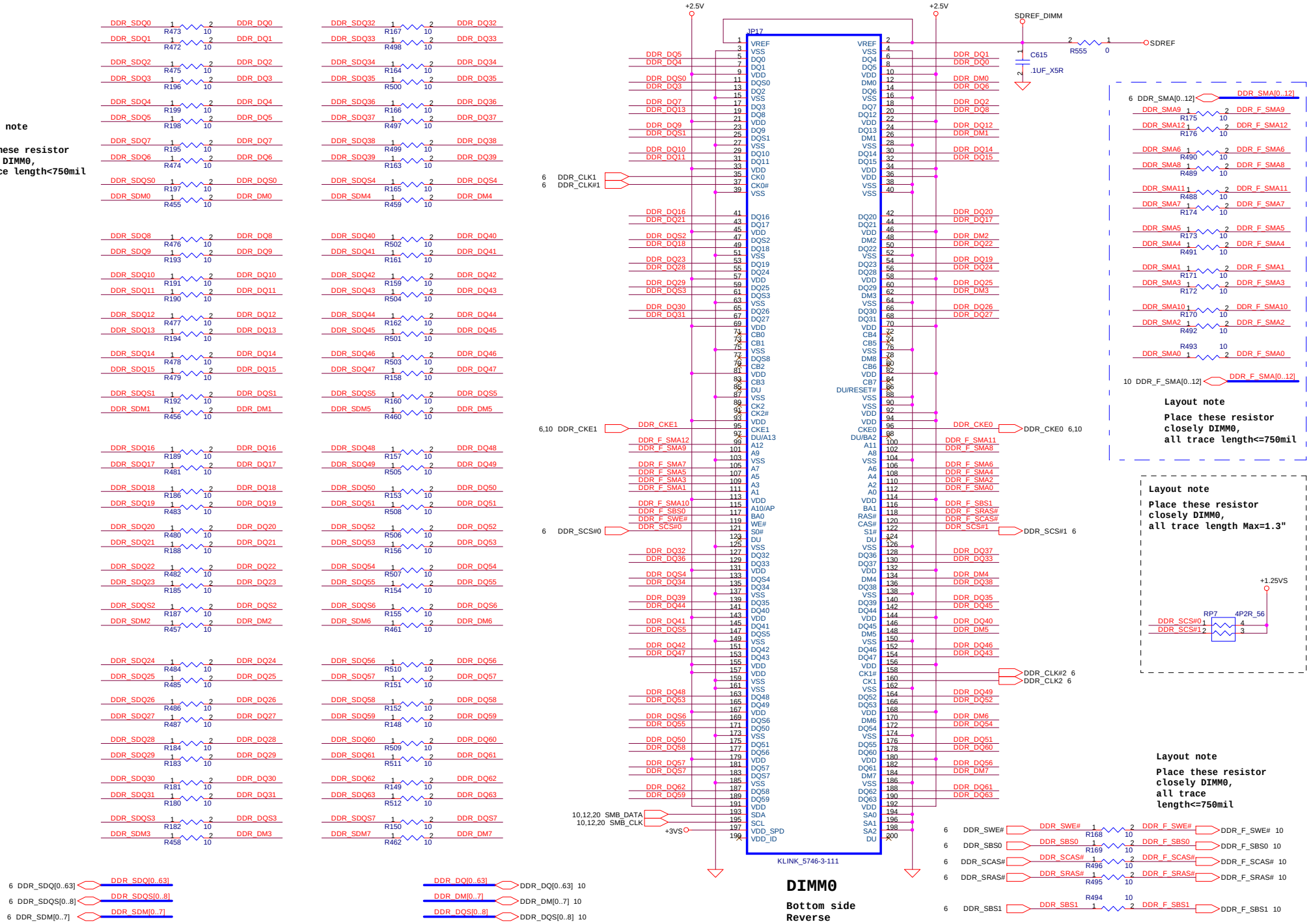

PROPRIETARY NOTE THIS SHEET OF ENGINEERING DRAWING IS THE PROPRIETARY PROPERTY OF COMPAL ELECTRONICS, INC. AND CONTAINS CONFIDENTIAL AND TRADE SECRET INFORMATION. THIS SHEET MAY NOT BE TRANSFERRED FROM THE CUSTODY OF THE COMPETENT DIVISION OF R&D DEPARTMENT EXCEPT AS AUTHORIZED BY COMPAL ELECTRONICS, INC. NEITHER THIS SHEET NOR THE INFORMATION IT CONTAINS MAY BE USED BY OR DISCLOSED TO ANY THIRD PARTY WITHOUT PRIOR WRITTEN CONSENT OF COMPAL ELECTRONICS, INC.

Compal Electronics, Inc.

Title: **DDR-SODIMM SLOT1**

Size	Document Number	Rev
B	LA1731	1.0

Date: 星期二, 十二 ?31, 2002 Sheet 9 of 46

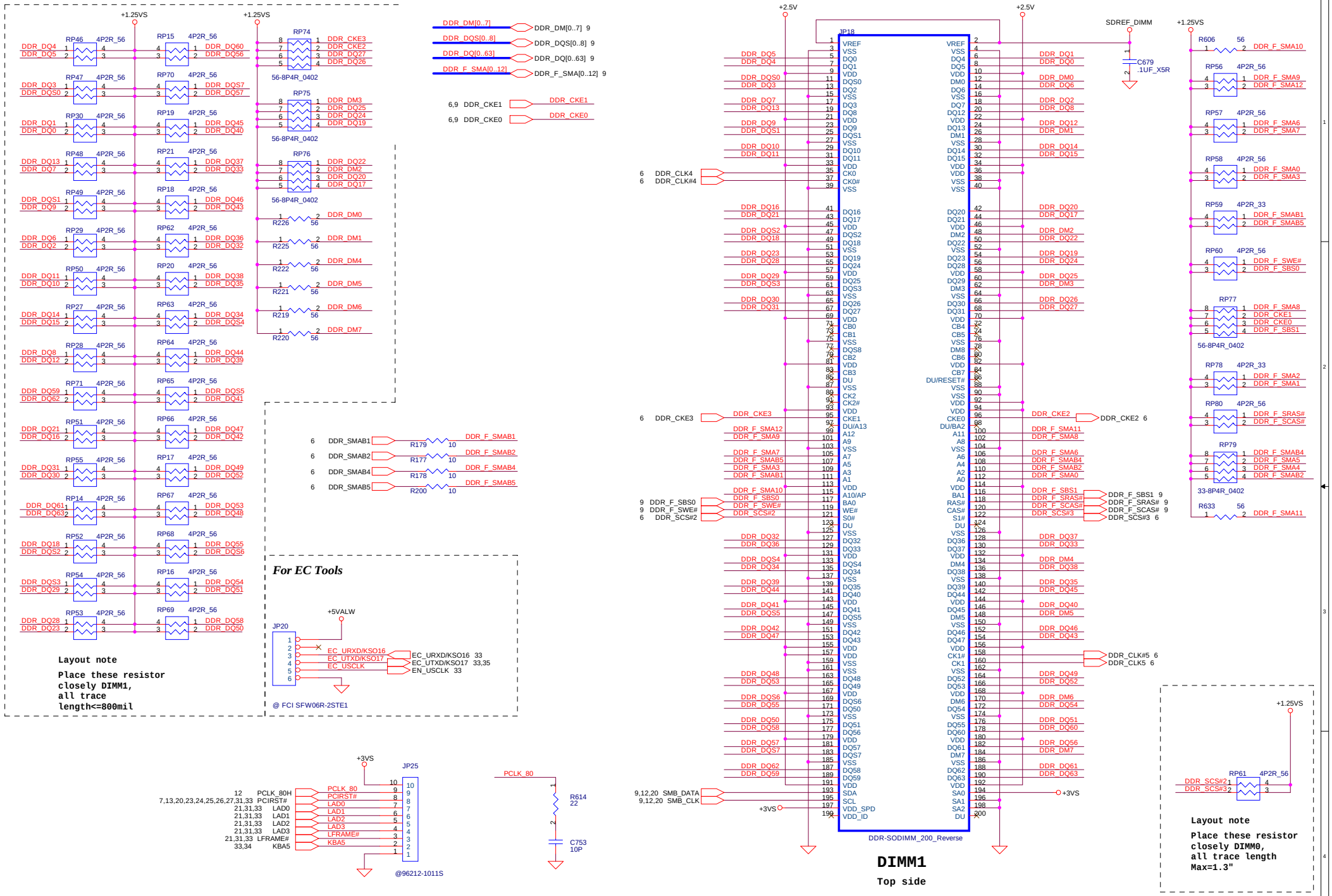

PROPRIETARY NOTE THIS SHEET OF ENGINEERING DRAWING IS THE PROPRIETARY PROPERTY OF COMPAL ELECTRONICS, INC. AND CONTAINS CONFIDENTIAL AND TRADE SECRET INFORMATION. THIS SHEET MAY NOT BE TRANSFERRED FROM THE CUSTODY OF THE COMPETENT DIVISION OF R&D DEPARTMENT EXCEPT AS AUTHORIZED BY COMPAL ELECTRONICS, INC. NEITHER THIS SHEET NOR THE INFORMATION IT CONTAINS MAY BE USED BY OR DISCLOSED TO ANY THIRD PARTY WITHOUT PRIOR WRITTEN CONSENT OF COMPAL ELECTRONICS, INC.

Compal Electronics, Inc.

Title: DDR-SODIMM SLOT1

Size	Document Number	Rev
B	LA1731	1.0

Date: 星期二, 十二 ?31, 2002 Sheet 10 of 46

Layout note :

Distribute as close as possible to DDR-SODIMM.

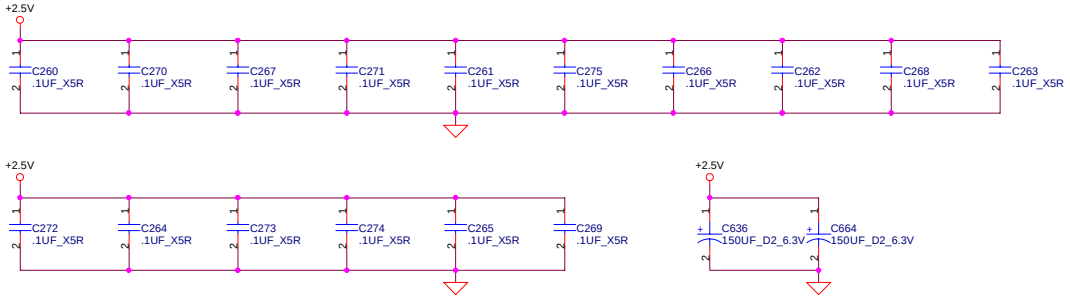

Layout note :

Place one cap close to every 2 pull up resistors termination to +1.25V

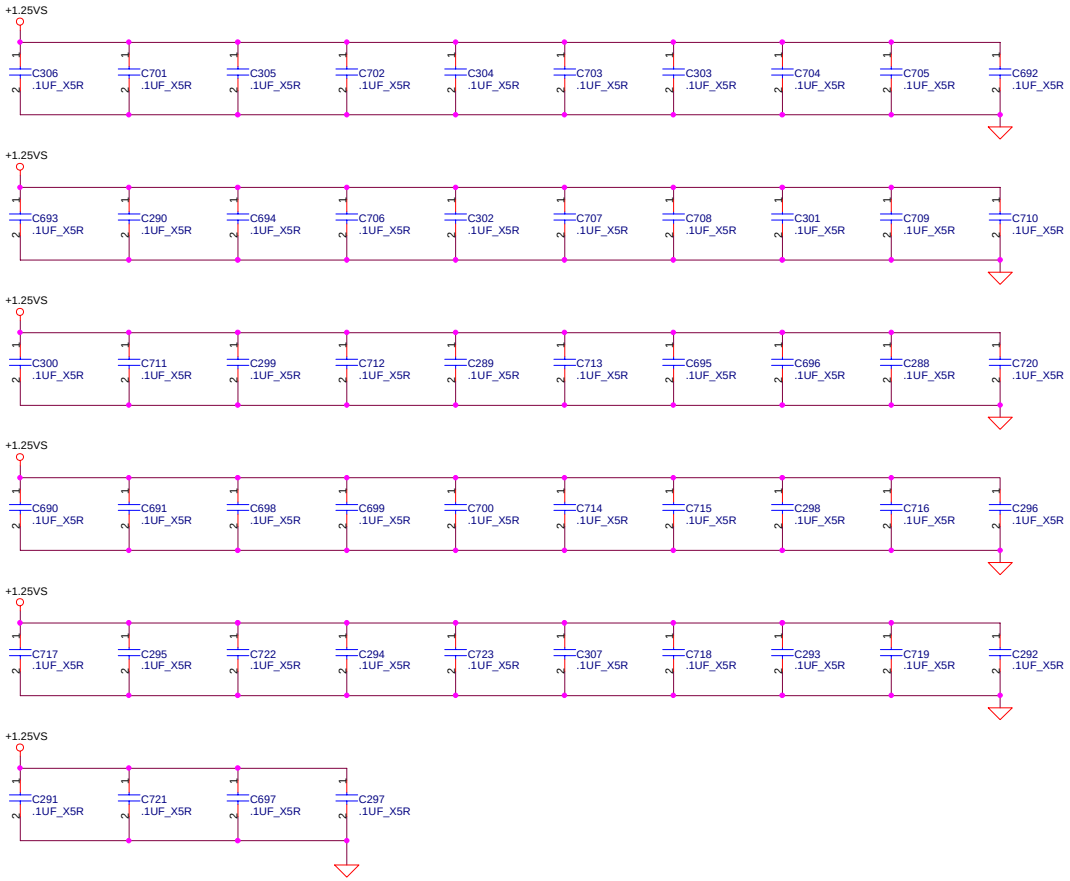

PROPRIETARY NOTE THIS SHEET OF ENGINEERING DRAWING IS THE PROPRIETARY PROPERTY OF COMPAL ELECTRONICS, INC. AND CONTAINS CONFIDENTIAL AND TRADE SECRET INFORMATION. THIS SHEET MAY NOT BE TRANSFERRED FROM THE CUSTODY OF THE COMPETENT DIVISION OF R&D DEPARTMENT EXCEPT AS AUTHORIZED BY COMPAL ELECTRONICS, INC. NEITHER THIS SHEET NOR THE INFORMATION IT CONTAINS MAY BE USED BY OR DISCLOSED TO ANY THIRD PARTY WITHOUT PRIOR WRITTEN CONSENT OF COMPAL ELECTRONICS, INC.

Compal Electronics, Inc.	
Title	DDR SODIMM Decoupling
Size B	Document Number LA1731
Rev	1.0
Date: 星期二, 十二 ?31, 2002	Sheet 11 of 46

SEL1	SEL0	Function
0	0	166Mhz Host CLK
0	1	100Mhz Host CLK
1	0	200Mhz Host CLK
1	1	133Mhz Host CLK

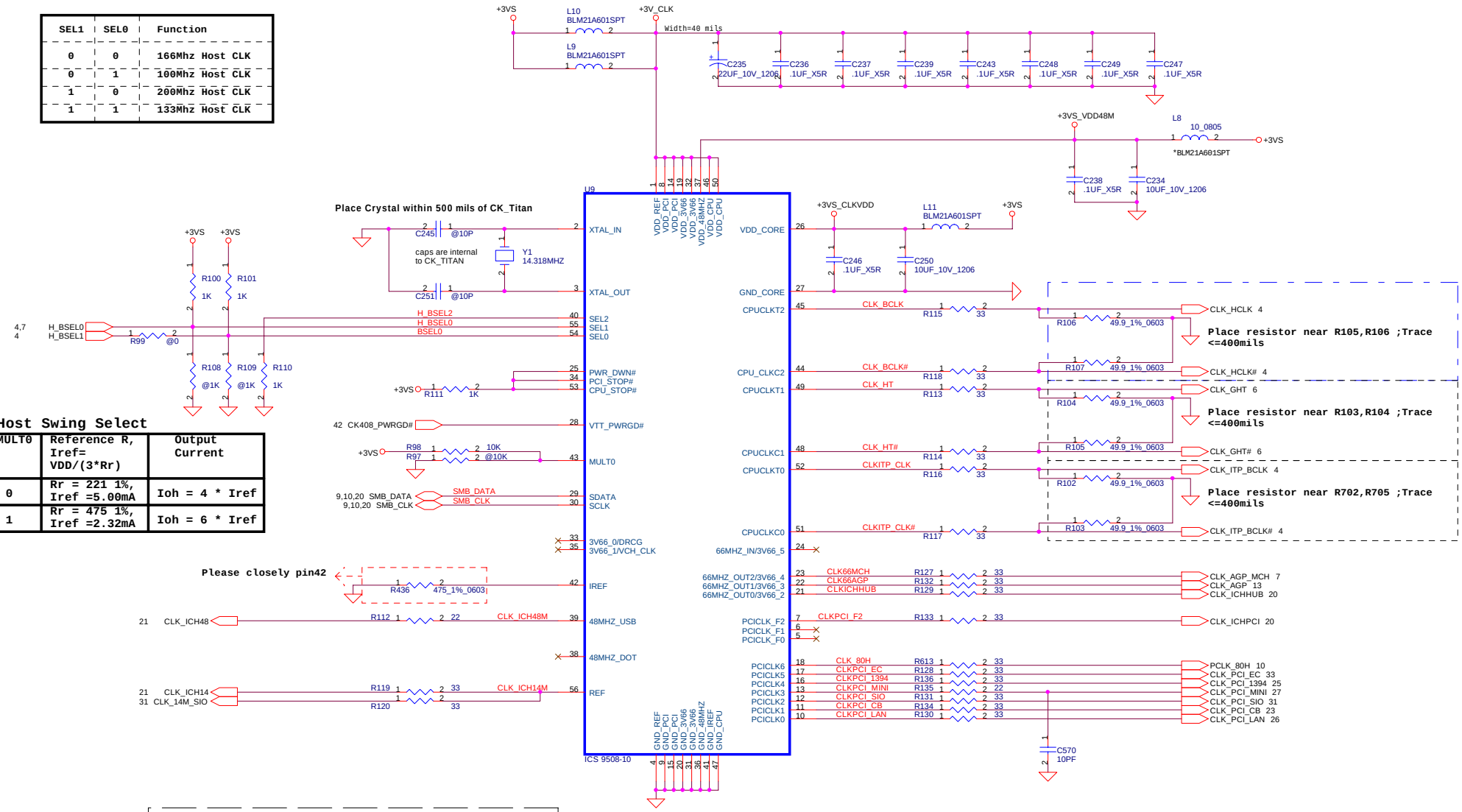

Host Swing Select

MULT0	Reference R, Iref= VDD/(3*Rr)	Output Current
0	Rr = 221 1%, Iref =5.00mA	Ioh = 4 * Iref
1	Rr = 475 1%, Iref =2.32mA	Ioh = 6 * Iref

Note:
CPU_CLK[2:0] needs to be running in C3, C4.

PROPRIETARY NOTE THIS SHEET OF ENGINEERING DRAWING IS THE PROPRIETARY PROPERTY OF COMPAL ELECTRONICS, INC. AND CONTAINS CONFIDENTIAL AND TRADE SECRET INFORMATION. THIS SHEET MAY NOT BE TRANSFERRED FROM THE CUSTODY OF THE COMPETENT DIVISION OF R&D DEPARTMENT EXCEPT AS AUTHORIZED BY COMPAL ELECTRONICS, INC. NEITHER THIS SHEET NOR THE INFORMATION IT CONTAINS MAY BE USED BY OR DISCLOSED TO ANY THIRD PARTY WITHOUT PRIOR WRITTEN CONSENT OF COMPAL ELECTRONICS, INC.

Compal Electronics, Inc.

Title: **Clock Generator**

Size: B | Document Number: **LA1731** | Rev: 1.0

Date: 星期二, 十二 ?31, 2002 | Sheet 12 of 46

PROPRIETARY NOTE THIS SHEET OF ENGINEERING DRAWING IS THE PROPRIETARY PROPERTY OF COMPAL ELECTRONICS, INC. AND CONTAINS CONFIDENTIAL AND TRADE SECRET INFORMATION. THIS SHEET MAY NOT BE TRANSFERRED FROM THE CUSTODY OF THE COMPETENT DIVISION OF R&D DEPARTMENT EXCEPT AS AUTHORIZED BY COMPAL ELECTRONICS, INC. NEITHER THIS SHEET NOR THE INFORMATION IT CONTAINS MAY BE USED BY OR DISCLOSED TO ANY THIRD PARTY WITHOUT PRIOR WRITTEN CONSENT OF COMPAL ELECTRONICS, INC.

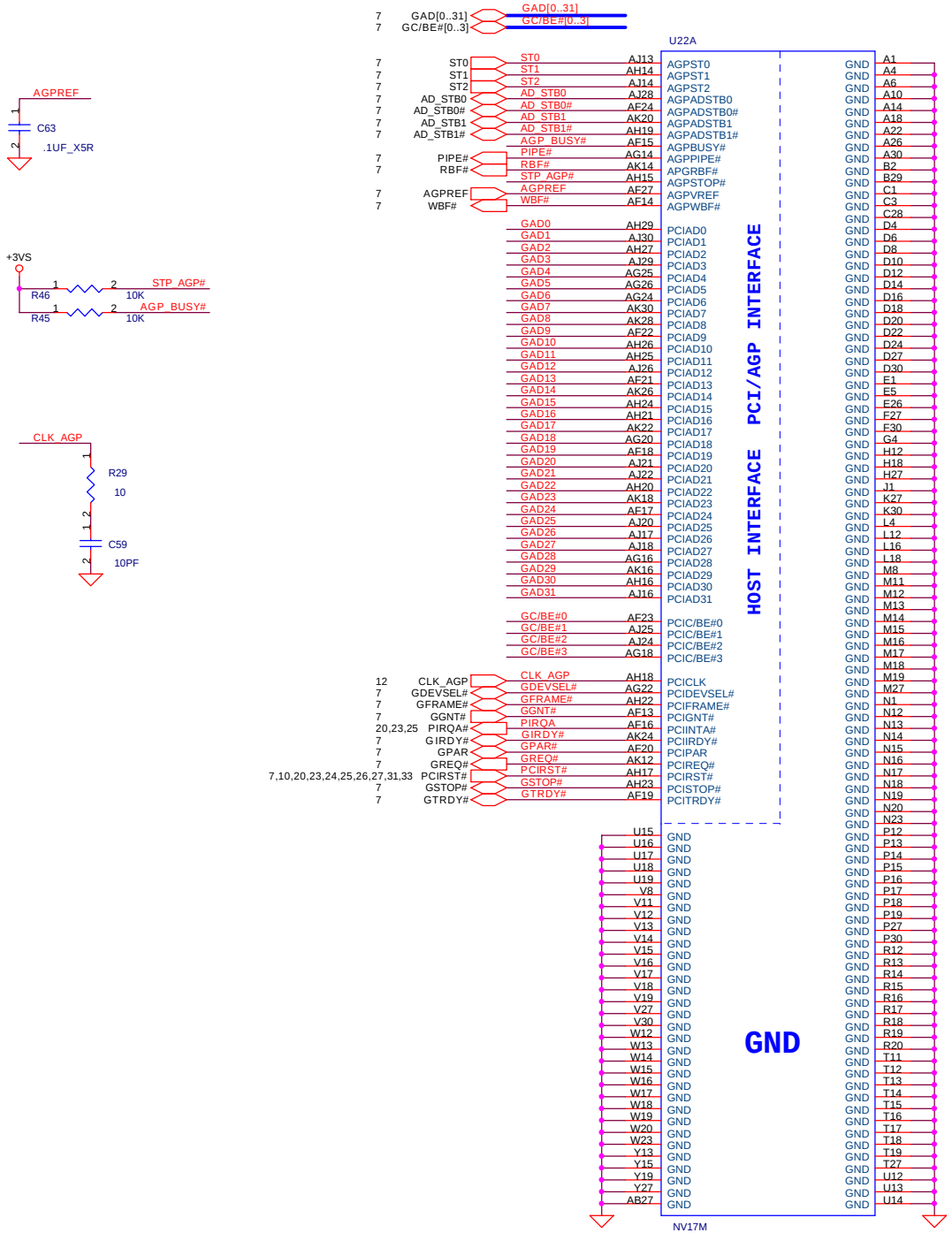

Compal Electronics, Inc.	
Title	nVIDIA NV17M (AGP BUS)
Size B	Document Number LA1731
Rev	1.0
Date: ¬P期二, 十二月 31, 2002	Sheet 13 of 46

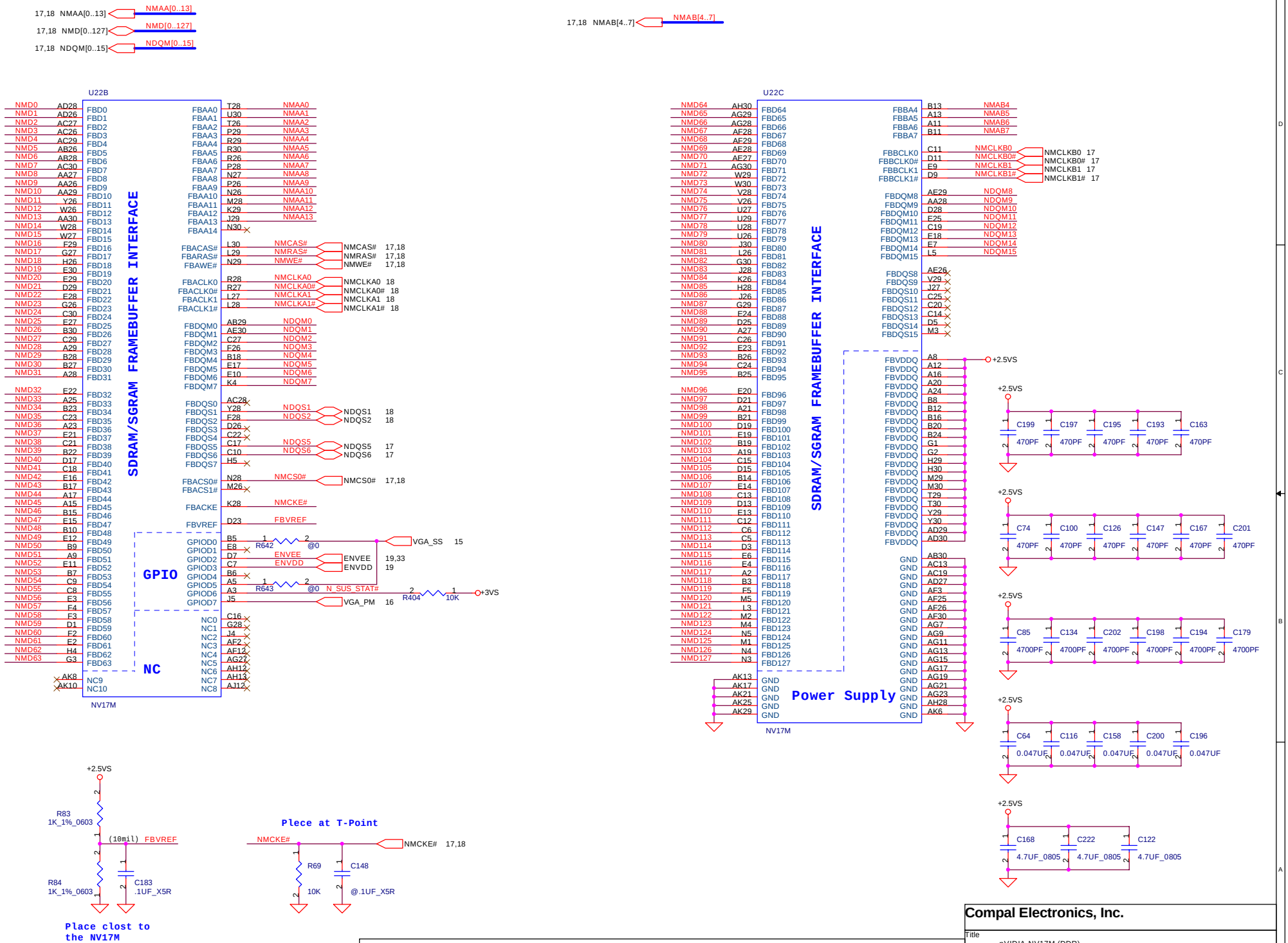

PROPRIETARY NOTE THIS SHEET OF ENGINEERING DRAWING IS THE PROPRIETARY PROPERTY OF COMPAL ELECTRONICS, INC. AND CONTAINS CONFIDENTIAL AND TRADE SECRET INFORMATION. THIS SHEET MAY NOT BE TRANSFERRED FROM THE CUSTODY OF THE COMPETENT DIVISION OF R&D DEPARTMENT EXCEPT AS AUTHORIZED BY COMPAL ELECTRONICS, INC. NEITHER THIS SHEET NOR THE INFORMATION IT CONTAINS MAY BE USED BY OR DISCLOSED TO ANY THIRD PARTY WITHOUT PRIOR WRITTEN CONSENT OF COMPAL ELECTRONICS, INC.

Compal Electronics, Inc.

Title	nVIDIA NV17M (DDR)	
Size B	Document Number LA1731	Rev 1.0
Date: ¬P期二, 十二月 31, 2002	Sheet 14 of 46	

PROPRIETARY NOTE THIS SHEET OF ENGINEERING DRAWING IS THE PROPRIETARY PROPERTY OF COMPAL ELECTRONICS, INC. AND CONTAINS CONFIDENTIAL AND TRADE SECRET INFORMATION. THIS SHEET MAY NOT BE TRANSFERRED FROM THE CUSTODY OF THE COMPETENT DIVISION OF R&D DEPARTMENT EXCEPT AS AUTHORIZED BY COMPAL ELECTRONICS, INC. NEITHER THIS SHEET NOR THE INFORMATION IT CONTAINS MAY BE USED BY OR DISCLOSED TO ANY THIRD PARTY WITHOUT PRIOR WRITTEN CONSENT OF COMPAL ELECTRONICS, INC.

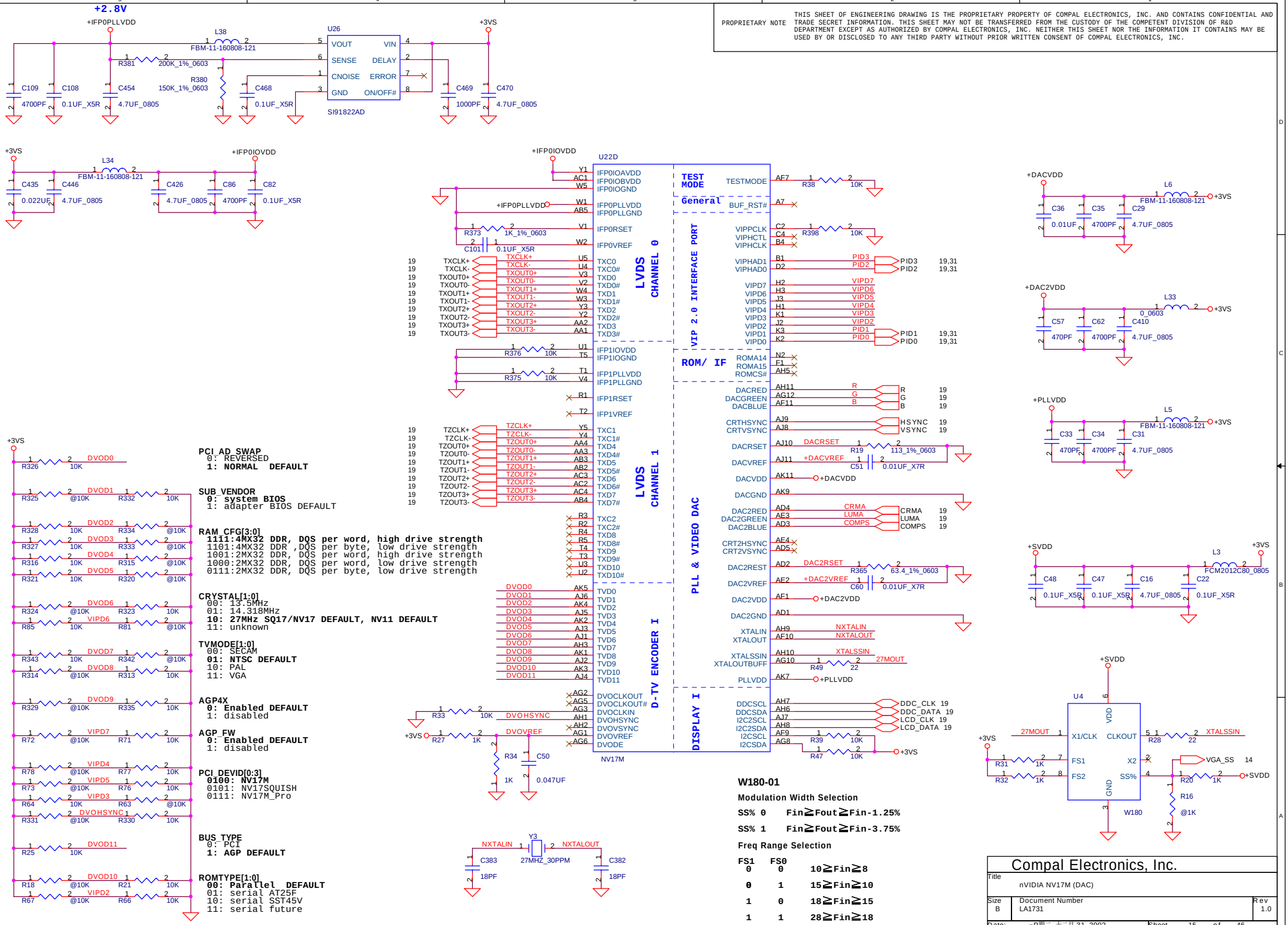

PCI_AD_SWAP
0: REVERSED
1: NORMAL DEFAULT

SUB_VENDOR
0: system BIOS
1: adapter BIOS DEFAULT

RAM_CFG[3:0]
1111:4MX32 DDR, DQS per word, high drive strength
1101:4MX32 DDR, DQS per byte, low drive strength
1001:2MX32 DDR, DQS per word, high drive strength
1000:2MX32 DDR, DQS per word, low drive strength
0111:2MX32 DDR, DQS per byte, low drive strength

CRYSTAL[1:0]
00: 13.5MHz
01: 14.318MHz
10: 27MHz SQ17/NV17 DEFAULT, NV11 DEFAULT
11: unknown

TVMODE[1:0]
00: SECAM
01: NTSC DEFAULT
10: PAL
11: VGA

AGP4X
0: Enabled DEFAULT
1: disabled

AGP_FW
0: Enabled DEFAULT
1: disabled

PCI_DEVID[0:3]
0100: NV17M
0101: NV17SQUISH
0111: NV17M_Pro

BUS_TYPE
0: PCI
1: AGP DEFAULT

ROMTYPE[1:0]
00: Parallel DEFAULT
01: serial AT25F
10: serial SST45V
11: serial future

W180-01

Modulation Width Selection

SS% 0 Fin≧Fout≧Fin-1.25%

SS% 1 Fin≧Fout≧Fin-3.75%

Freq Range Selection

FS1	FS0	
0	0	10≧Fin≧8
0	1	15≧Fin≧10
1	0	18≧Fin≧15
1	1	28≧Fin≧18

Compal Electronics, Inc.

Title: nVIDIA NV17M (DAC)

Size: B | Document Number: LA1731 | Rev: 1.0

Date: ¬P期二, 十二月 31, 2002 | Sheet 15 of 46

PROPRIETARY NOTE THIS SHEET OF ENGINEERING DRAWING IS THE PROPRIETARY PROPERTY OF COMPAL ELECTRONICS, INC. AND CONTAINS CONFIDENTIAL AND TRADE SECRET INFORMATION. THIS SHEET MAY NOT BE TRANSFERRED FROM THE CUSTODY OF THE COMPETENT DIVISION OF R&D DEPARTMENT EXCEPT AS AUTHORIZED BY COMPAL ELECTRONICS, INC. NEITHER THIS SHEET NOR THE INFORMATION IT CONTAINS MAY BE USED BY OR DISCLOSED TO ANY THIRD PARTY WITHOUT PRIOR WRITTEN CONSENT OF COMPAL ELECTRONICS, INC.

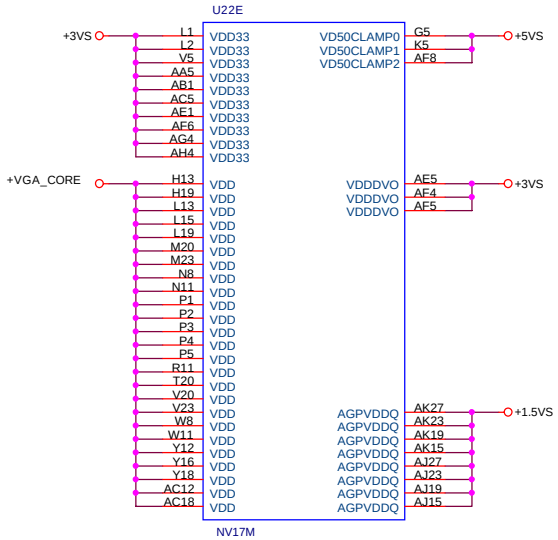

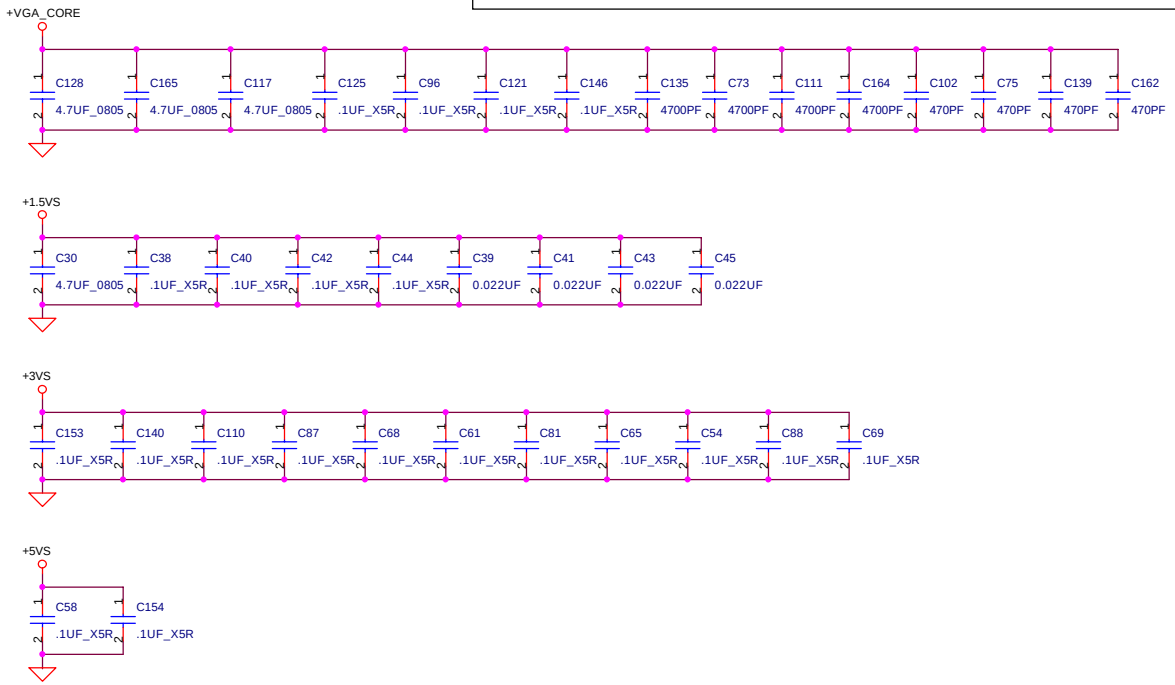

As close as ppossible to related pin

+1.35V +/-50mV, 3.5A___For NV17M_Pro

+1.2V +/-50mV, 3.5A___For NV17M

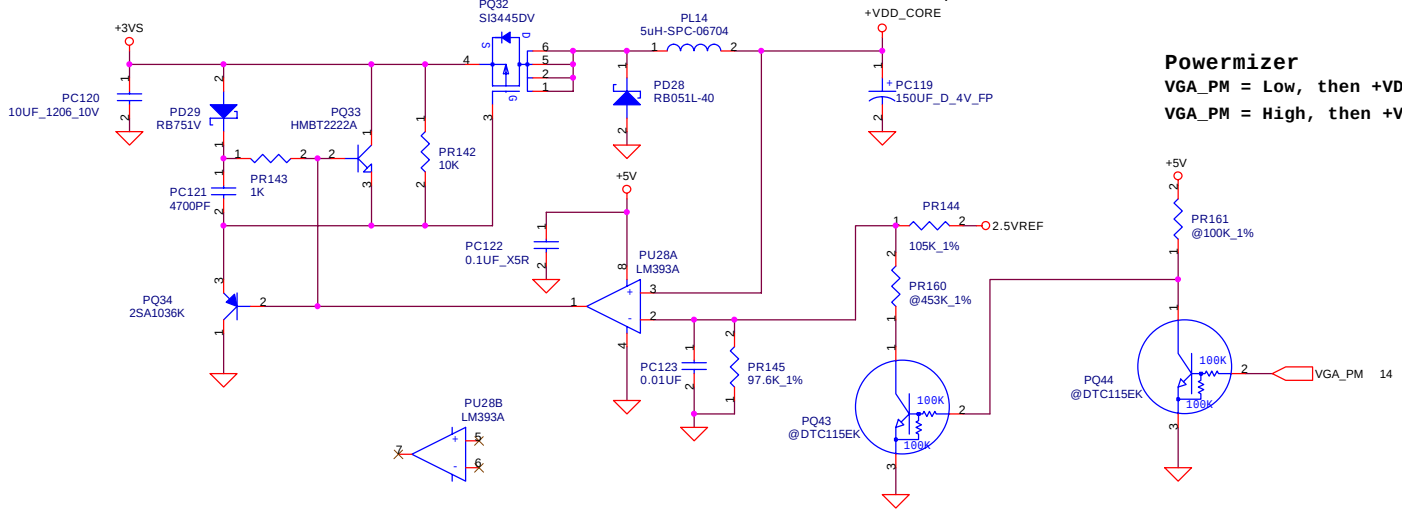

Powermizer

VGA_PM = Low, then +VDD_CORE = 1.2V

VGA_PM = High, then +VDD_CORE = 1.35V

Compal Electronics, Inc.		
Title: nVIDIA NV17M (Power)		
Size: B	Document Number: LA1731	Rev: 1.0
Date: ¬P期二, 十二月 31, 2002	Sheet 16 of 46	

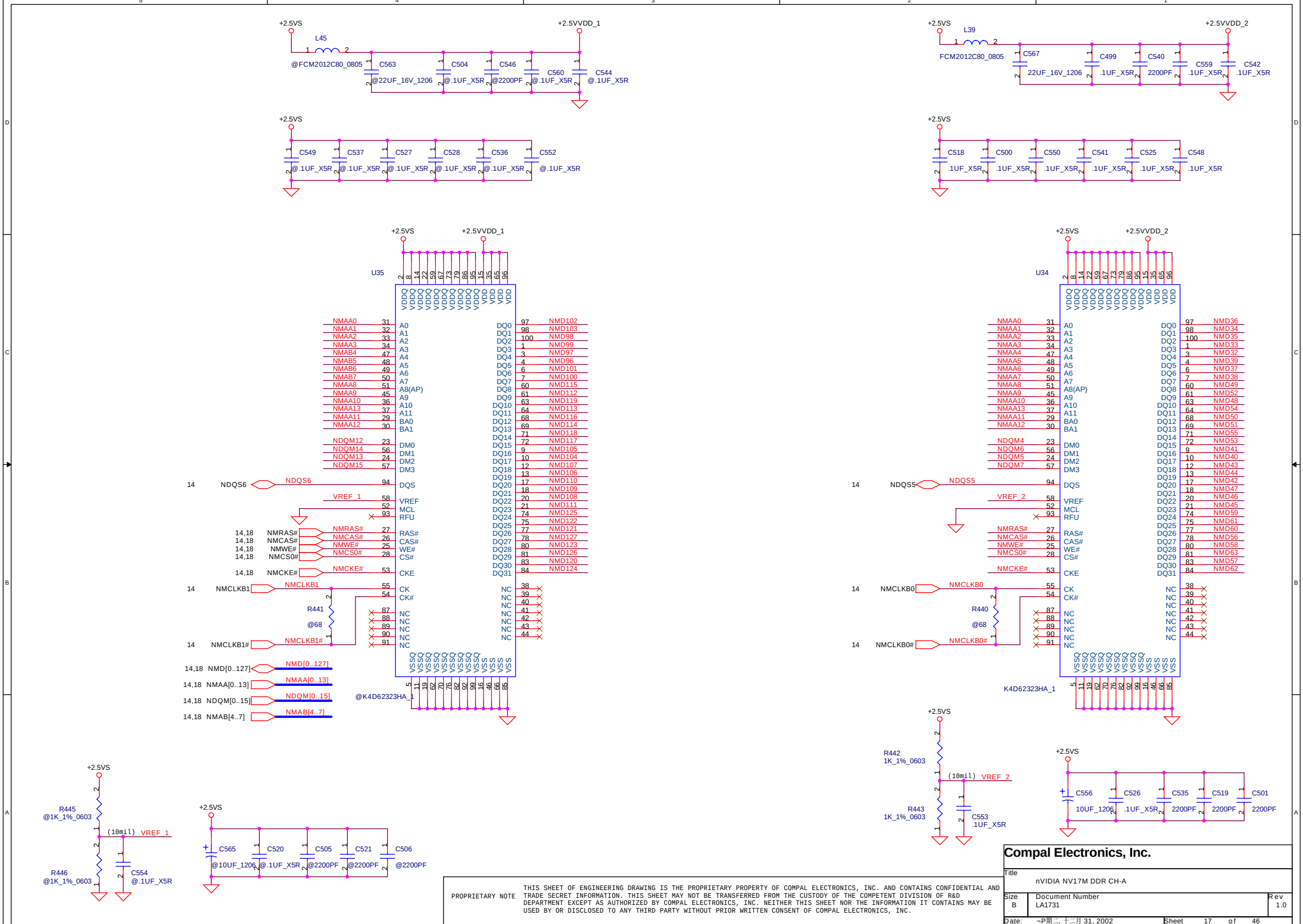

PROPRIETARY NOTE

THIS SHEET OF ENGINEERING DRAWING IS THE PROPRIETARY PROPERTY OF COMPAL ELECTRONICS, INC. AND CONTAINS CONFIDENTIAL AND TRADE SECRET INFORMATION. THIS SHEET MAY NOT BE TRANSFERRED FROM THE CUSTODY OF THE COMPETENT DIVISION OF R&D DEPARTMENT EXCEPT AS AUTHORIZED BY COMPAL ELECTRONICS, INC. NEITHER THIS SHEET NOR THE INFORMATION IT CONTAINS MAY BE USED BY OR DISCLOSED TO ANY THIRD PARTY WITHOUT PRIOR WRITTEN CONSENT OF COMPAL ELECTRONICS, INC.

Compal Electronics, Inc.

Title	nVIDIA NV17M DDR CH-A
Size B	Document Number LA1731
Rev	1.0
Date:	¬P期二, 十二月 31, 2002
Sheet	17 of 46

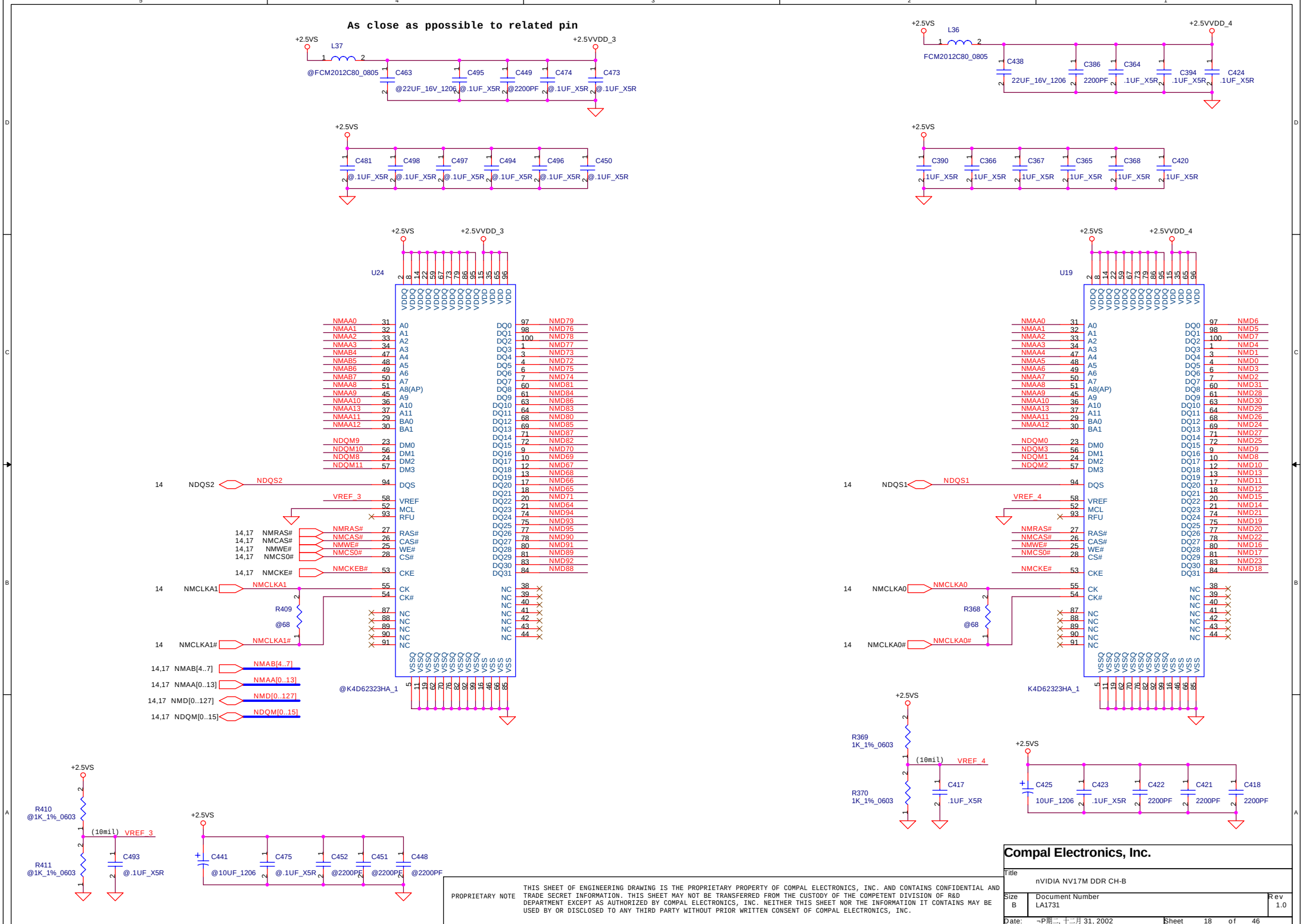

PROPRIETARY NOTE

THIS SHEET OF ENGINEERING DRAWING IS THE PROPRIETARY PROPERTY OF COMPAL ELECTRONICS, INC. AND CONTAINS CONFIDENTIAL AND TRADE SECRET INFORMATION. THIS SHEET MAY NOT BE TRANSFERRED FROM THE CUSTODY OF THE COMPETENT DIVISION OF R&D DEPARTMENT EXCEPT AS AUTHORIZED BY COMPAL ELECTRONICS, INC. NEITHER THIS SHEET NOR THE INFORMATION IT CONTAINS MAY BE USED BY OR DISCLOSED TO ANY THIRD PARTY WITHOUT PRIOR WRITTEN CONSENT OF COMPAL ELECTRONICS, INC.

Compal Electronics, Inc.

Title	nVIDIA NV17M DDR CH-B	
Size B	Document Number LA1731	Rev 1.0
Date: ¬P期三, 十二月 31, 2002	Sheet 18 of 46	

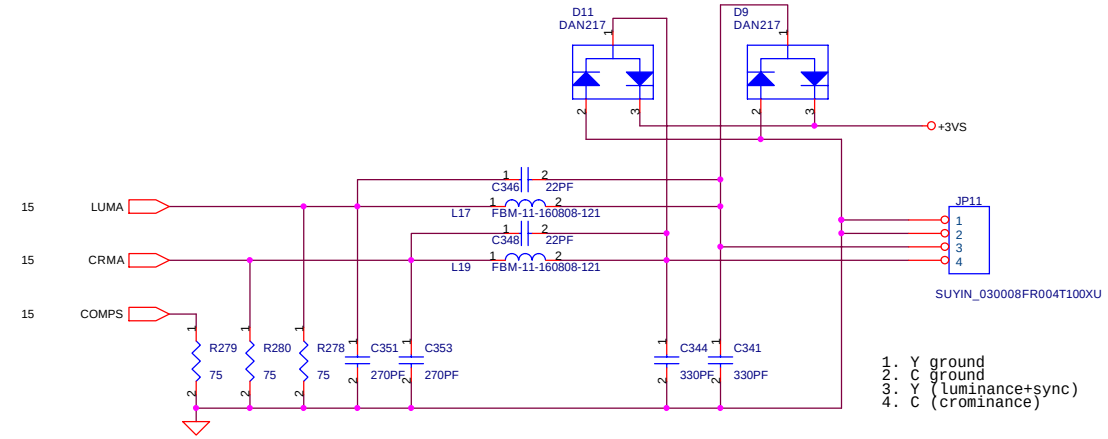

LVDS Connector

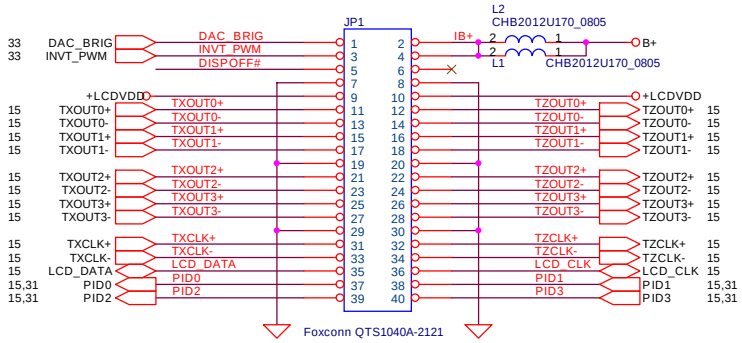

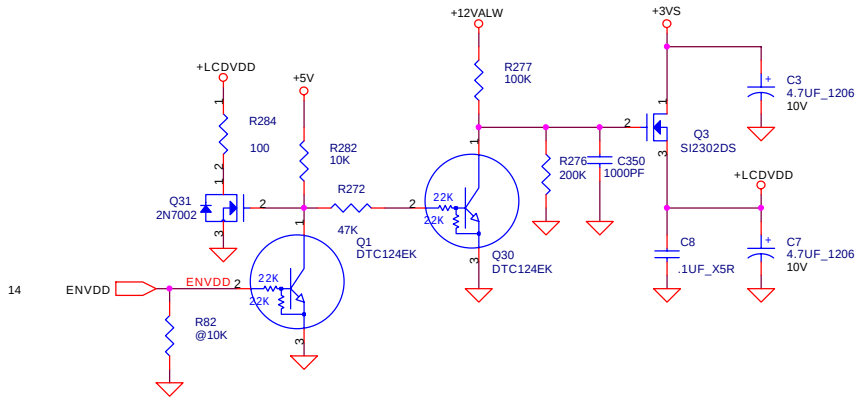

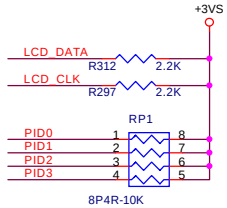

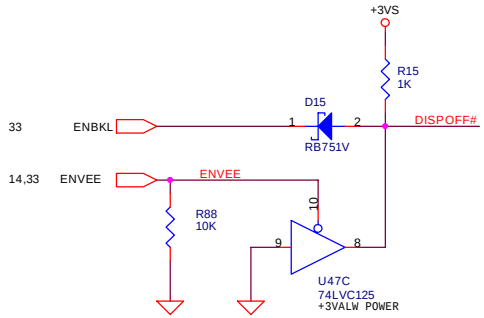

CRT Connector

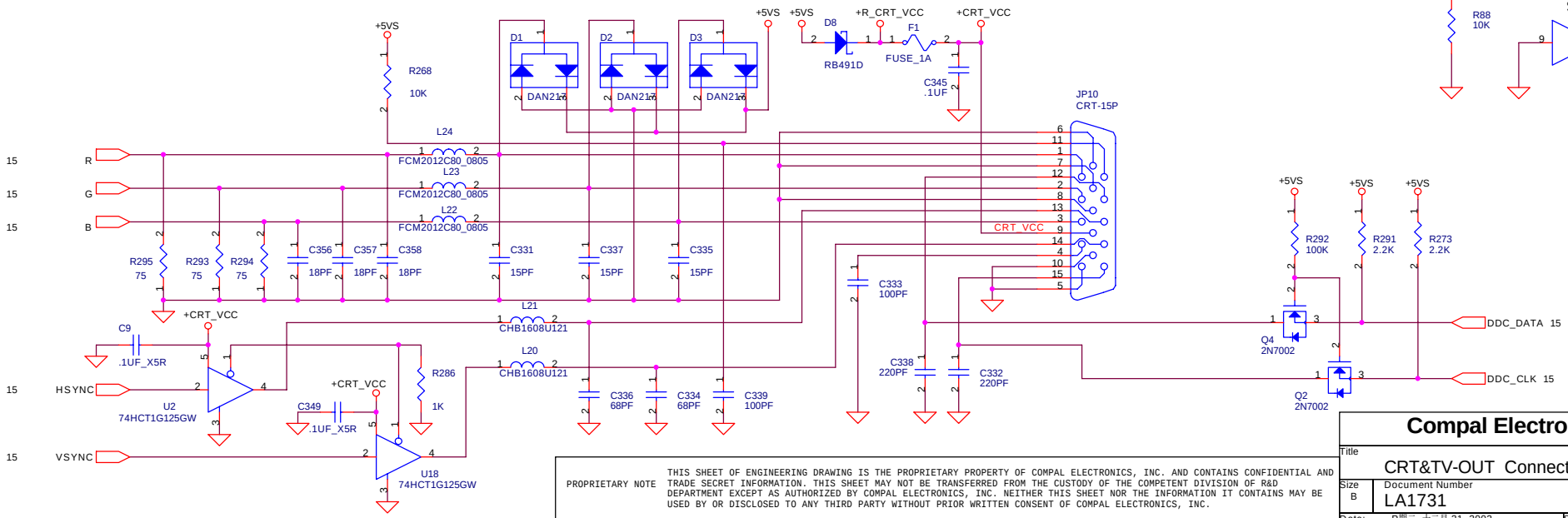

PROPRIETARY NOTE THIS SHEET OF ENGINEERING DRAWING IS THE PROPRIETARY PROPERTY OF COMPAL ELECTRONICS, INC. AND CONTAINS CONFIDENTIAL AND TRADE SECRET INFORMATION. THIS SHEET MAY NOT BE TRANSFERRED FROM THE CUSTODY OF THE COMPETENT DIVISION OF R&D DEPARTMENT EXCEPT AS AUTHORIZED BY COMPAL ELECTRONICS, INC. NEITHER THIS SHEET NOR THE INFORMATION IT CONTAINS MAY BE USED BY OR DISCLOSED TO ANY THIRD PARTY WITHOUT PRIOR WRITTEN CONSENT OF COMPAL ELECTRONICS, INC.

Compal Electronics, Inc.

Title	CRT&TV-OUT Connector
Size B	Document Number LA1731
Rev	1.0
Date:	¬P期二, 十二月 31, 2002
Sheet	19 of 46

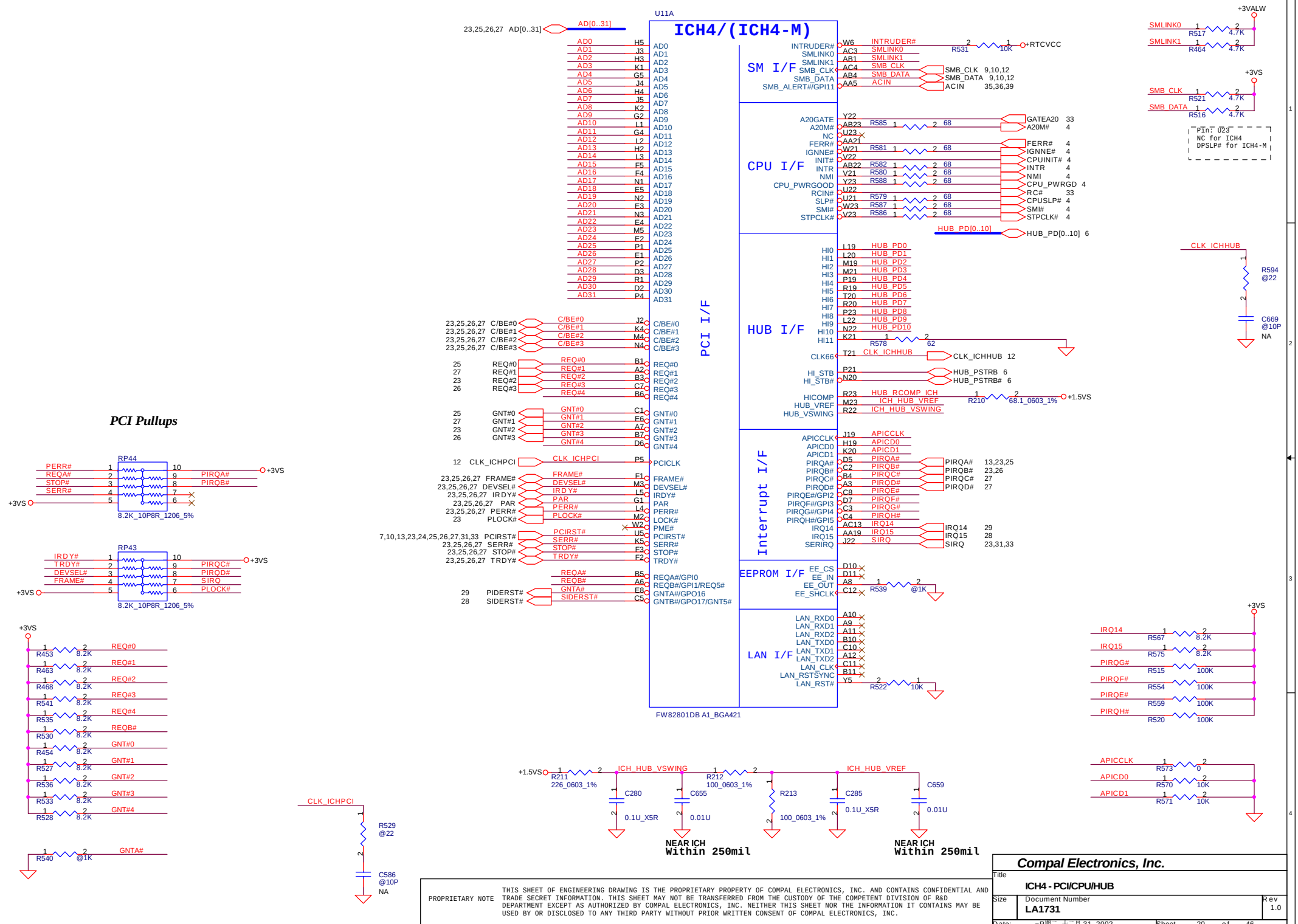
ICH4/(ICH4-M)
U11A
PCI I/F
SM I/F
CPU I/F
HUB I/F
Interrupt I/F
EEPROM I/F
LAN I/F
FW82801DB A1_BGA421
PCI Pullups
RP44
RP43
8.2K_10P8R_1206_5%
NEAR ICH
Within 250mil
Compal Electronics, Inc.
ICH4 - PCI/CPU/HUB
LA1731
Rev 1.0
Sheet 20 of 46
PROPRIETARY NOTE
THIS SHEET OF ENGINEERING DRAWING IS THE PROPRIETARY PROPERTY OF COMPAL ELECTRONICS, INC. AND CONTAINS CONFIDENTIAL AND TRADE SECRET INFORMATION. THIS SHEET MAY NOT BE TRANSFERRED FROM THE CUSTODY OF THE COMPETENT DIVISION OF R&D DEPARTMENT EXCEPT AS AUTHORIZED BY COMPAL ELECTRONICS, INC. NEITHER THIS SHEET NOR THE INFORMATION IT CONTAINS MAY BE USED BY OR DISCLOSED TO ANY THIRD PARTY WITHOUT PRIOR WRITTEN CONSENT OF COMPAL ELECTRONICS, INC.

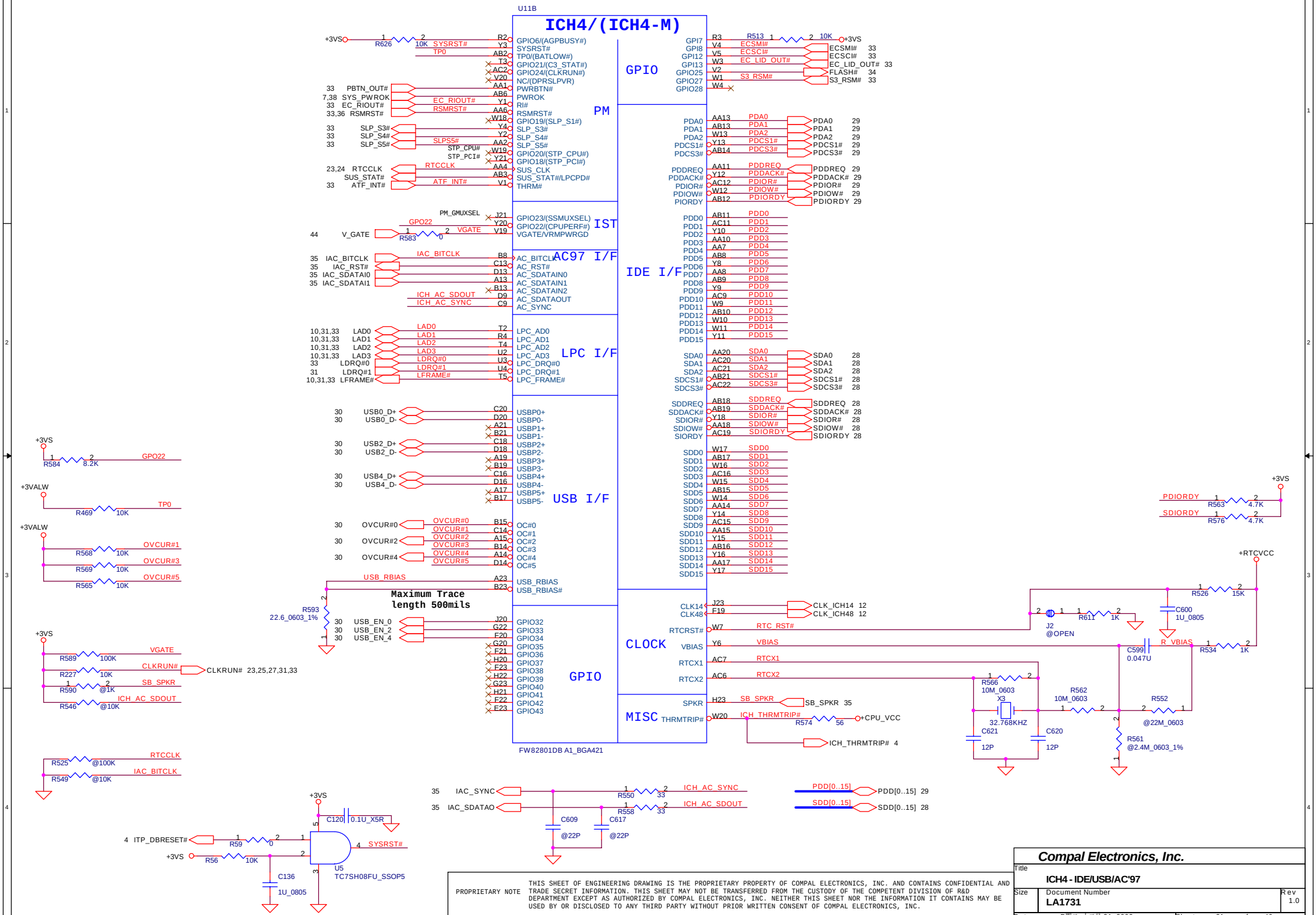

PROPRIETARY NOTE THIS SHEET OF ENGINEERING DRAWING IS THE PROPRIETARY PROPERTY OF COMPAL ELECTRONICS, INC. AND CONTAINS CONFIDENTIAL AND TRADE SECRET INFORMATION. THIS SHEET MAY NOT BE TRANSFERRED FROM THE CUSTODY OF THE COMPETENT DIVISION OF R&D DEPARTMENT EXCEPT AS AUTHORIZED BY COMPAL ELECTRONICS, INC. NEITHER THIS SHEET NOR THE INFORMATION IT CONTAINS MAY BE USED BY OR DISCLOSED TO ANY THIRD PARTY WITHOUT PRIOR WRITTEN CONSENT OF COMPAL ELECTRONICS, INC.

Compal Electronics, Inc.	
Title	ICH4 - IDE/USB/AC'97
Size	Document Number: LA1731
Rev	1.0
Date:	¬P期二, 十二月 31, 2002
Sheet	21 of 46

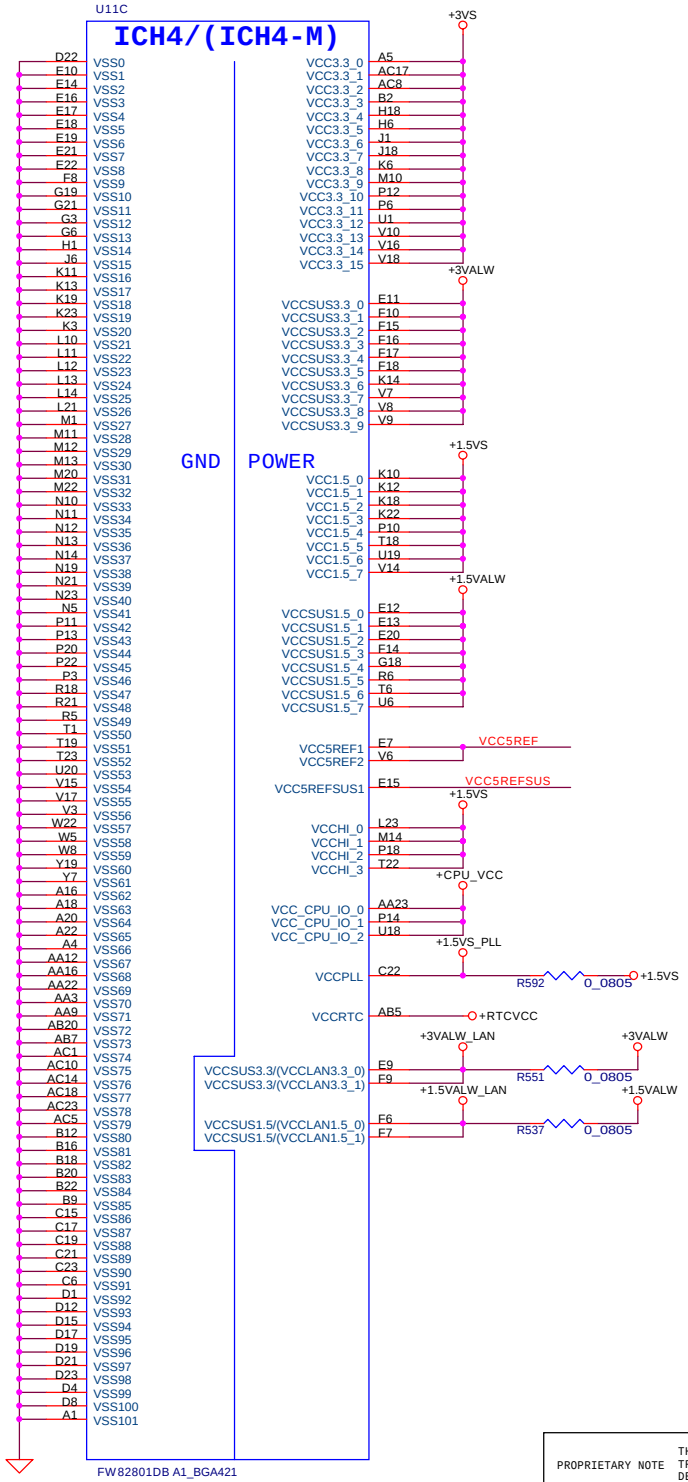

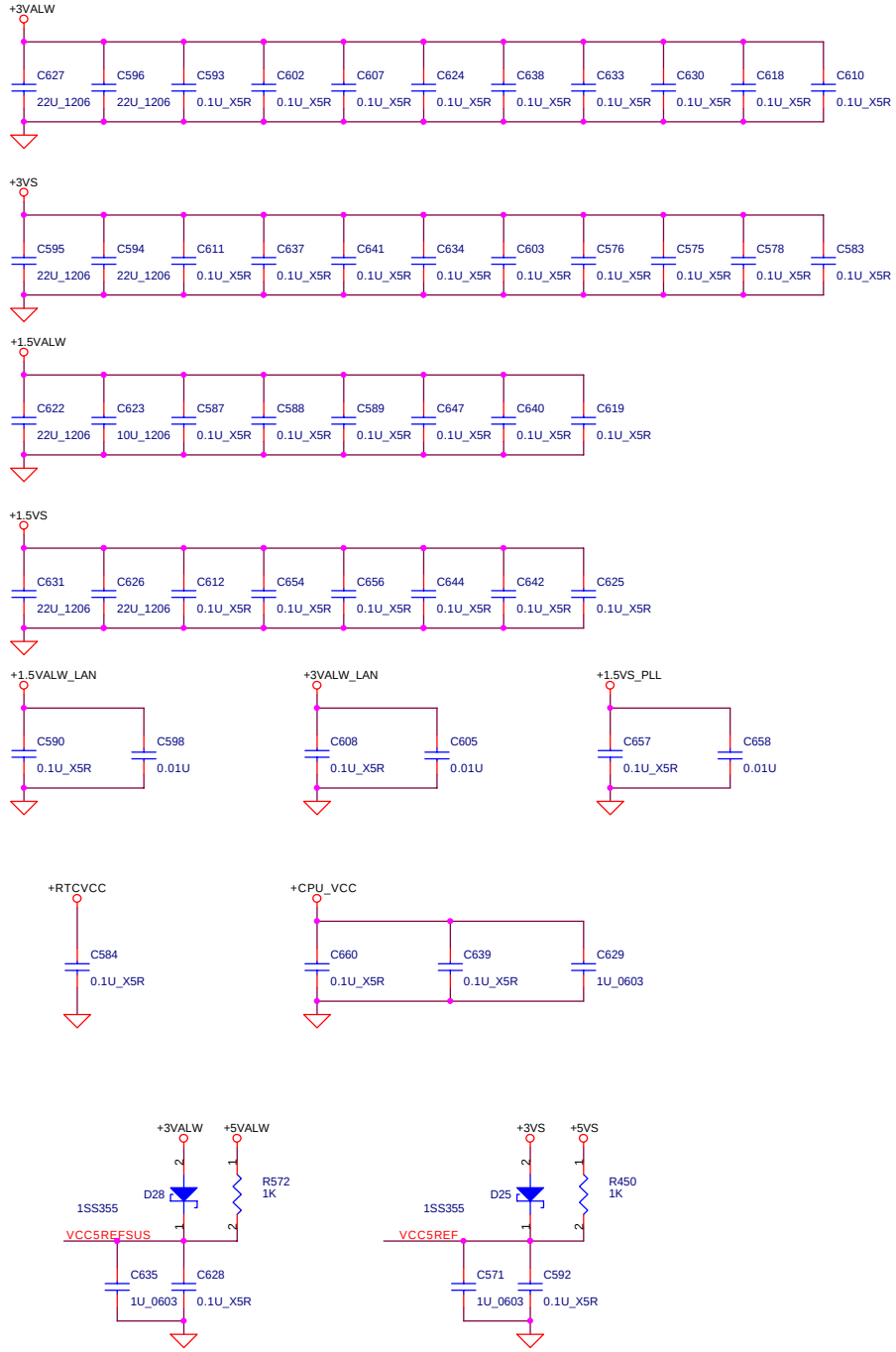

PROPRIETARY NOTE THIS SHEET OF ENGINEERING DRAWING IS THE PROPRIETARY PROPERTY OF COMPAL ELECTRONICS, INC. AND CONTAINS CONFIDENTIAL AND TRADE SECRET INFORMATION. THIS SHEET MAY NOT BE TRANSFERRED FROM THE CUSTODY OF THE COMPETENT DIVISION OF R&D DEPARTMENT EXCEPT AS AUTHORIZED BY COMPAL ELECTRONICS, INC. NEITHER THIS SHEET NOR THE INFORMATION IT CONTAINS MAY BE USED BY OR DISCLOSED TO ANY THIRD PARTY WITHOUT PRIOR WRITTEN CONSENT OF COMPAL ELECTRONICS, INC.

Compal Electronics, Inc.

Title	ICH4 - POWER/GND
Size	Document Number: LA1731
Rev	1.0
Date:	¬P期二, 十二月 31, 2002
Sheet	22 of 46

CardBus Controller
OZ6933T (uBGA)

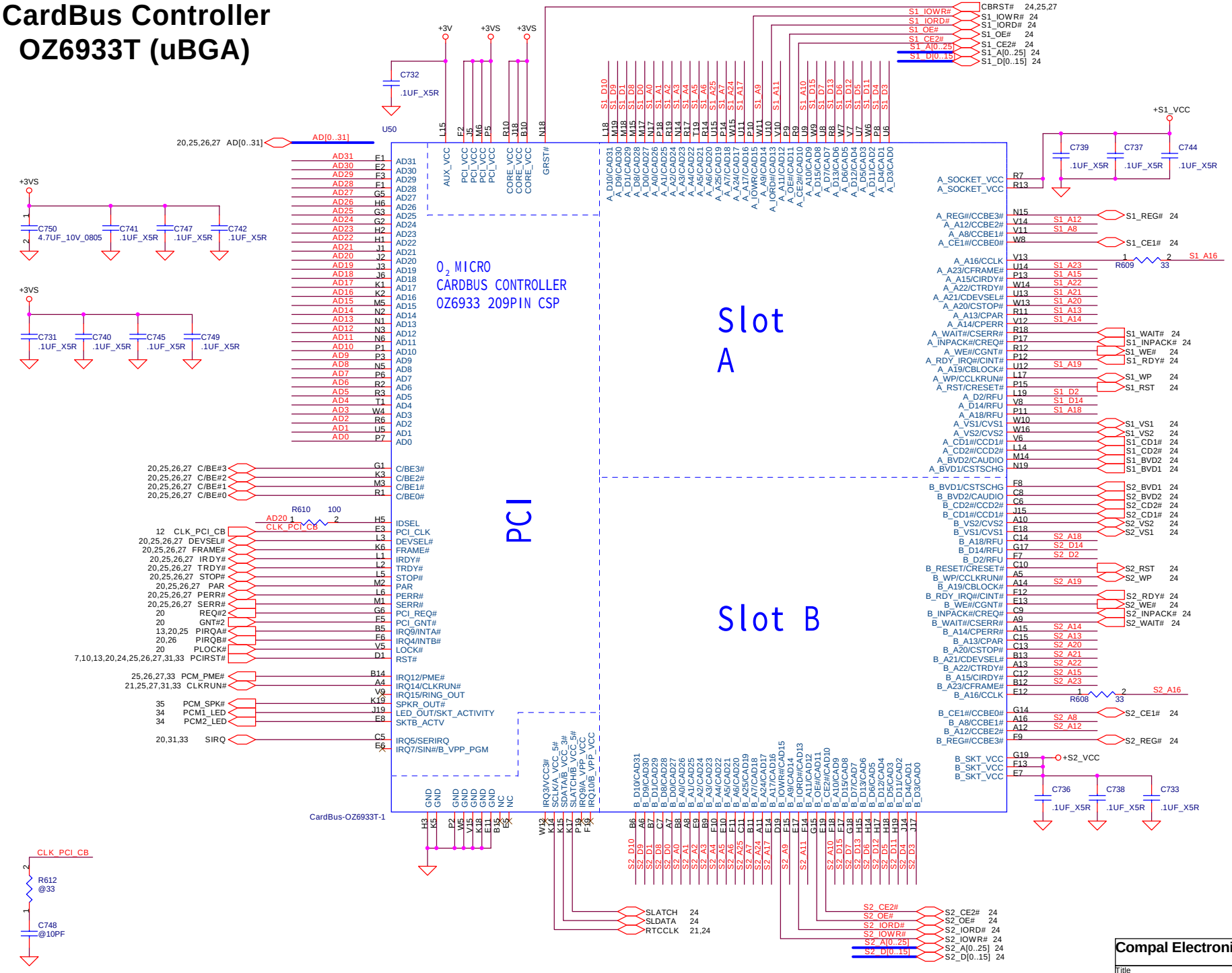

THIS SHEET OF ENGINEERING DRAWING IS THE PROPRIETARY PROPERTY OF COMPAL ELECTRONICS, INC. AND CONTAINS CONFIDENTIAL AND TRADE SECRET INFORMATION. THIS SHEET MAY NOT BE TRANSFERRED FROM THE CUSTODY OF THE COMPETENT DIVISION OF R&D DEPARTMENT EXCEPT AS AUTHORIZED BY COMPAL ELECTRONICS, INC. NEITHER THIS SHEET NOR THE INFORMATION IT CONTAINS MAY BE USED BY OR DISCLOSED TO ANY THIRD PARTY WITHOUT PRIOR WRITTEN CONSENT OF COMPAL ELECTRONICS, INC.

Compal Electronics, Inc.

Title	CardBus Controller (OZ6933T)
Size B	Document Number LA1731
Rev	1.0
Date:	¬P期三, 十二月 31, 2002
Sheet	23 of 46

PCMCIA POWER CTRL.

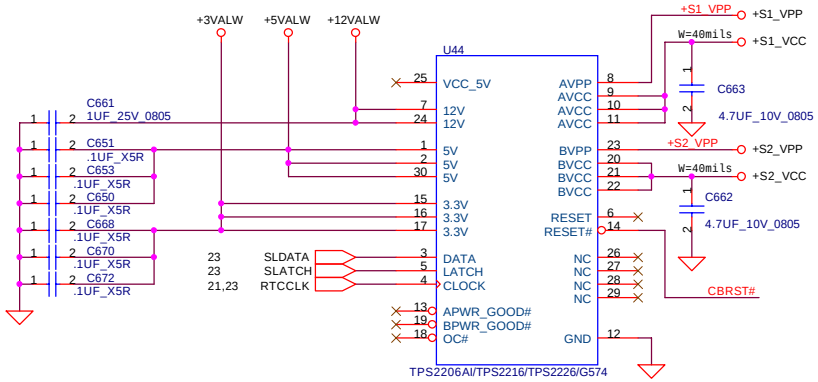

CARDBUS SOCKET

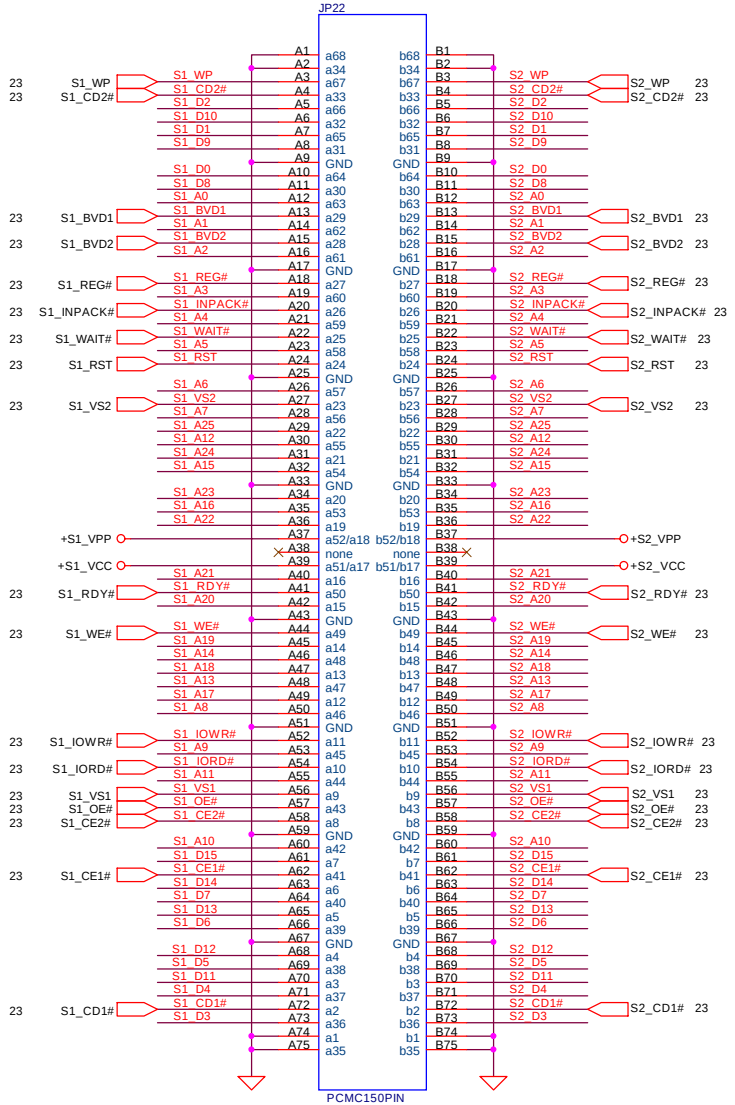

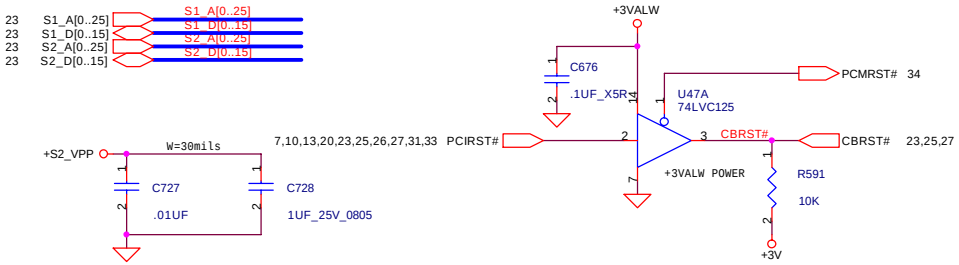

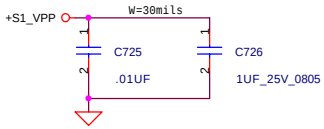

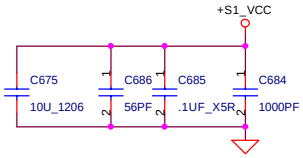

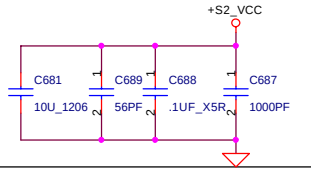

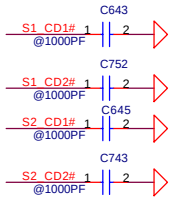

THIS SHEET OF ENGINEERING DRAWING IS THE PROPRIETARY PROPERTY OF COMPAL ELECTRONICS, INC. AND CONTAINS CONFIDENTIAL AND TRADE SECRET INFORMATION. THIS SHEET MAY NOT BE TRANSFERED FROM THE CUSTODY OF THE COMPETENT DIVISION OF R&D DEPARTMENT EXCEPT AS AUTHORIZED BY COMPAL ELECTRONICS, INC. NEITHER THIS SHEET NOR THE INFORMATION IT CONTAINS MAY BE USED BY OR DISCLOSED TO ANY THIRD PARTY WITHOUT PRIOR WRITTEN CONSENT OF COMPAL ELECTRONICS, INC.

Compal Electronics, Inc

Title	FCI PCMCIA SOCKET	
Size B	Document Number LA1731	Rev 1.0
Date: ¬P期二, 十二月 31, 2002	Sheet 24 of 46	

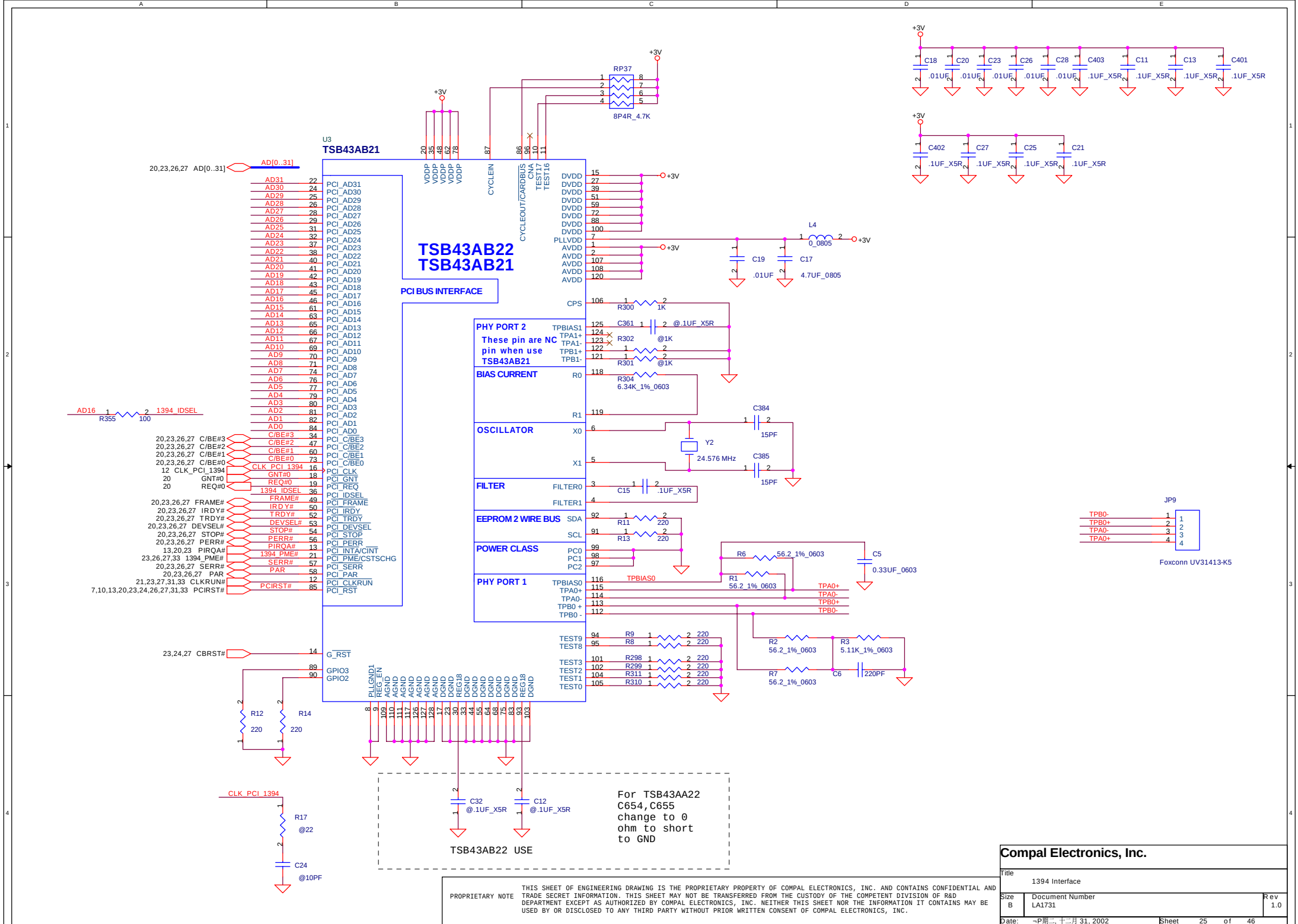

PROPRIETARY NOTE

THIS SHEET OF ENGINEERING DRAWING IS THE PROPRIETARY PROPERTY OF COMPAL ELECTRONICS, INC. AND CONTAINS CONFIDENTIAL AND TRADE SECRET INFORMATION. THIS SHEET MAY NOT BE TRANSFERRED FROM THE CUSTODY OF THE COMPETENT DIVISION OF R&D DEPARTMENT EXCEPT AS AUTHORIZED BY COMPAL ELECTRONICS, INC. NEITHER THIS SHEET NOR THE INFORMATION IT CONTAINS MAY BE USED BY OR DISCLOSED TO ANY THIRD PARTY WITHOUT PRIOR WRITTEN CONSENT OF COMPAL ELECTRONICS, INC.

Compal Electronics, Inc.

Title	1394 Interface	
Size B	Document Number LA1731	Rev 1.0
Date: ¬P期三, 十二月 31, 2002	Sheet 25 of 46	

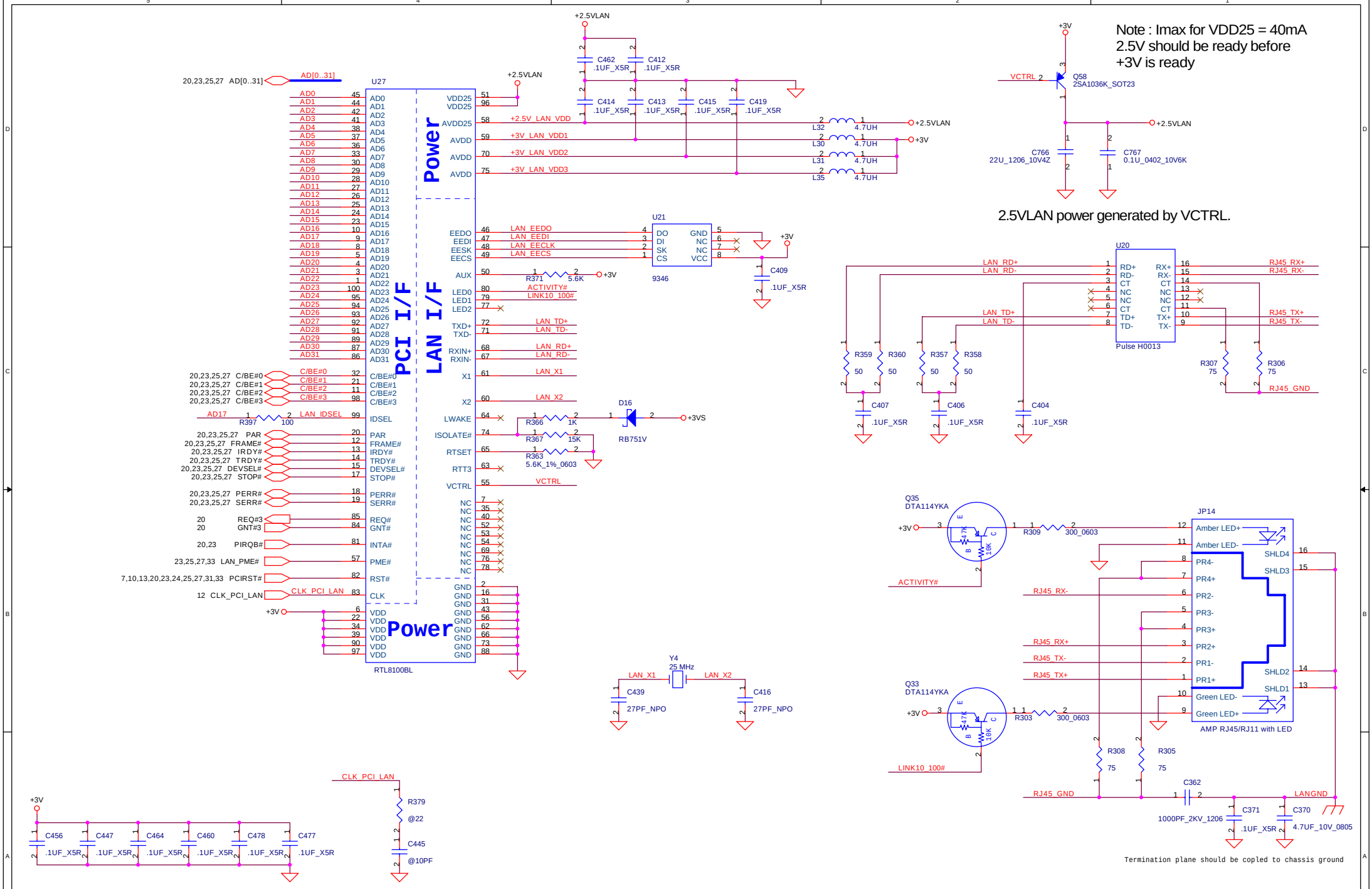

PROPRIETARY NOTE THIS SHEET OF ENGINEERING DRAWING IS THE PROPRIETARY PROPERTY OF COMPAL ELECTRONICS, INC. AND CONTAINS CONFIDENTIAL AND TRADE SECRET INFORMATION. THIS SHEET MAY NOT BE TRANSFERRED FROM THE CUSTODY OF THE COMPETENT DIVISION OF R&D DEPARTMENT EXCEPT AS AUTHORIZED BY COMPAL ELECTRONICS, INC. NEITHER THIS SHEET NOR THE INFORMATION IT CONTAINS MAY BE USED BY OR DISCLOSED TO ANY THIRD PARTY WITHOUT PRIOR WRITTEN CONSENT OF COMPAL ELECTRONICS, INC.

Compal Electronics, Inc.

Title	LAN REALTEK RTL8100BL	
Size B	Document Number LA1731	Rev 1.0
Date: ¬P期二, 十二月 31, 2002	Sheet 26 of 46	

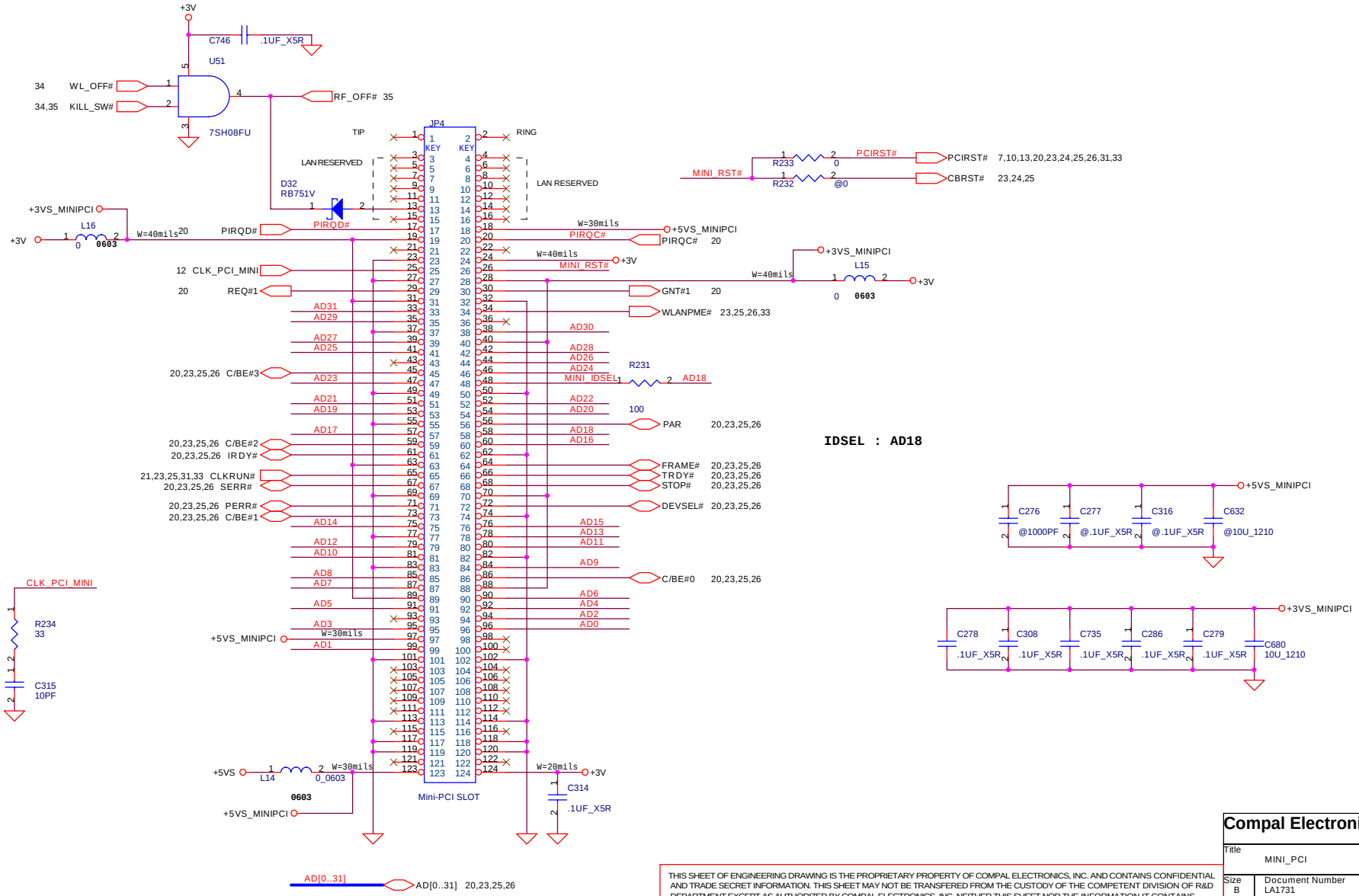

IDSEL : AD18

THIS SHEET OF ENGINEERING DRAWING IS THE PROPRIETARY PROPERTY OF COMPAL ELECTRONICS, INC. AND CONTAINS CONFIDENTIAL AND TRADE SECRET INFORMATION. THIS SHEET MAY NOT BE TRANSFERED FROM THE CUSTODY OF THE COMPETENT DIVISION OF R&D DEPARTMENT EXCEPT AS AUTHORIZED BY COMPAL ELECTRONICS, INC. NEITHER THIS SHEET NOR THE INFORMATION IT CONTAINS MAY BE USED BY OR DISCLOSED TO ANY THIRD PARTY WITHOUT PRIOR WRITTEN CONSENT OF COMPAL ELECTRONICS, INC.

Compal Electronics, Inc

Title	MINI_PCI	
Size B	Document Number LA1731	Rev 1.0
Date: ¬P期二, 十二月 31, 2002	Sheet 27 of 46	

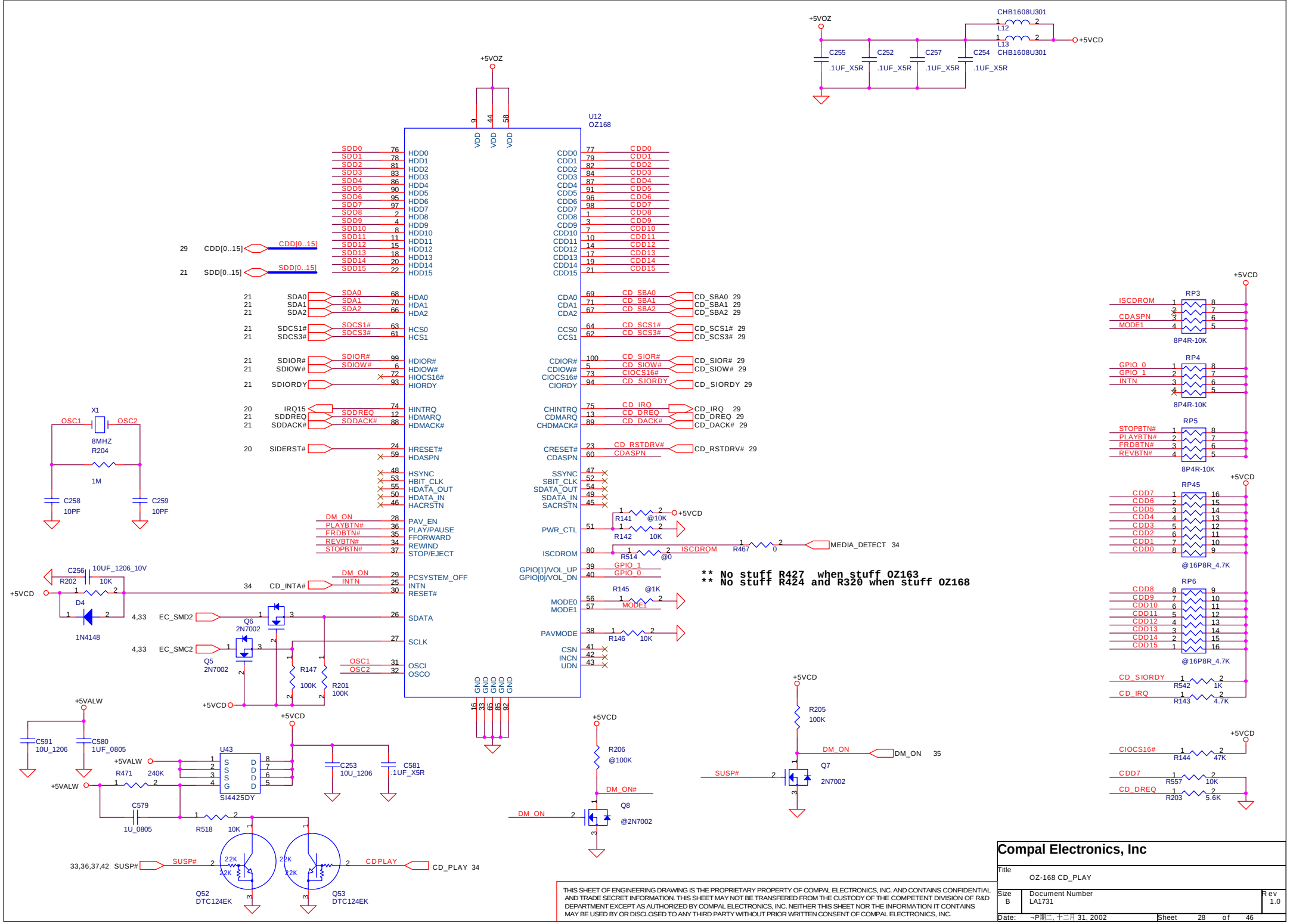
U12
OZ168
+5VOZ
+5VCD
+5VALW
CHB1608U301
L12
L13
C255 .1UF_X5R
C252 .1UF_X5R
C257 .1UF_X5R
C254 .1UF_X5R
SDD[0..15]
CDD[0..15]
HDD0 HDD1 HDD2 HDD3 HDD4 HDD5 HDD6 HDD7 HDD8 HDD9 HDD10 HDD11 HDD12 HDD13 HDD14 HDD15
CDD0 CDD1 CDD2 CDD3 CDD4 CDD5 CDD6 CDD7 CDD8 CDD9 CDD10 CDD11 CDD12 CDD13 CDD14 CDD15
HDA0 HDA1 HDA2
HCS0 HCS1
HDIOR# HDIOW# HIOCS16# HIORDY
HINTRQ HDMARQ HDMACK#
HRESET# HDASPN
HSYNC HBIT_CLK HDATA_OUT HDATA_IN HACRSTN
PAV_EN PLAY/PAUSE FFORWARD REWIND STOP/EJECT
PCSYSTEM_OFF INTN RESET#
SDATA
SCLK
OSCI OSCO
CDA0 CDA1 CDA2
CCS0 CCS1
CDIOR# CDIOW# CIOCS16# CIORDY
CHINTRQ CDMARQ CHDMACK#
CRESET# CDASPN
SSYNC SBIT_CLK SDATA_OUT SDATA_IN SACRSTN
PWR_CTL
ISCDROM
GPIO[1]/VOL_UP GPIO[0]/VOL_DN
MODE0 MODE1
PAVMODE
CSN INCN UDN
GND
** No stuff R427 when stuff OZ163
** No stuff R424 and R320 when stuff OZ168
X1 8MHZ
OSC1 OSC2
R204 1M
C258 10PF
C259 10PF
C256 10UF_1206_10V
R202 10K
D4 1N4148
EC_SMD2
EC_SMC2
Q6 2N7002
Q5 2N7002
R147 100K
R201 100K
C591 10U_1206
C580 1UF_0805
U43 SI4425DY
R471 240K
C579 1U_0805
R518 10K
C253 10U_1206
C581 .1UF_X5R
SUSP#
Q52 DTC124EK
Q53 DTC124EK
CD_PLAY
R141 @10K
R142 10K
R467 0
MEDIA_DETECT
R514 @0
GPIO_1
GPIO_0
R145 @1K
MODE1
R146 10K
R206 @100K
DM_ON#
Q8 @2N7002
R205 100K
Q7 2N7002
RP3 8P4R-10K
RP4 8P4R-10K
RP5 8P4R-10K
RP45 @16P8R_4.7K
RP6 @16P8R_4.7K
R542 1K
R143 4.7K
R144 47K
R557 10K
R203 5.6K
Compal Electronics, Inc
Title OZ-168 CD_PLAY
Size B
Document Number LA1731
Rev 1.0
Date: ¬P期二, 十二月 31, 2002
Sheet 28 of 46
THIS SHEET OF ENGINEERING DRAWING IS THE PROPRIETARY PROPERTY OF COMPAL ELECTRONICS, INC. AND CONTAINS CONFIDENTIAL AND TRADE SECRET INFORMATION. THIS SHEET MAY NOT BE TRANSFERED FROM THE CUSTODY OF THE COMPETENT DIVISION OF R&D DEPARTMENT EXCEPT AS AUTHORIZED BY COMPAL ELECTRONICS, INC. NEITHER THIS SHEET NOR THE INFORMATION IT CONTAINS MAY BE USED BY OR DISCLOSED TO ANY THIRD PARTY WITHOUT PRIOR WRITTEN CONSENT OF COMPAL ELECTRONICS, INC.

IDE,CD-ROM Module CONN.

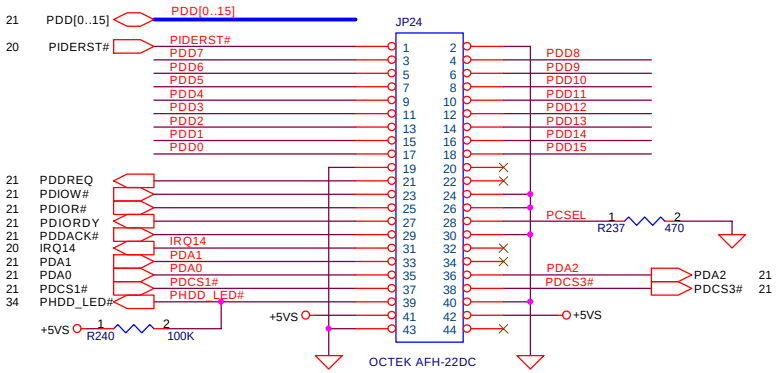

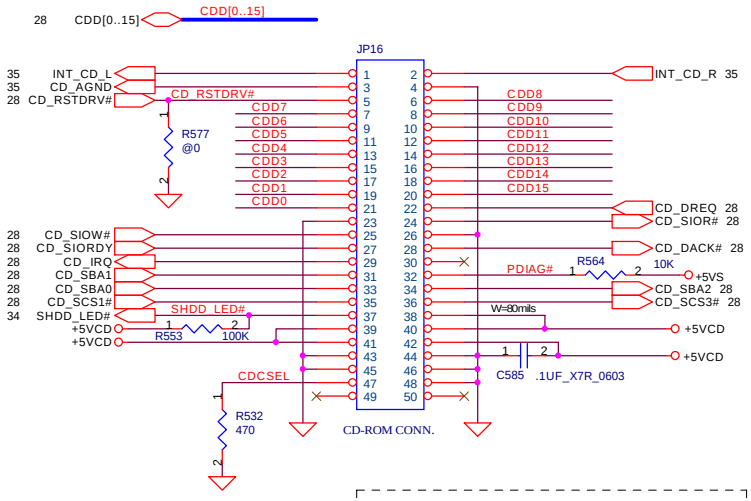

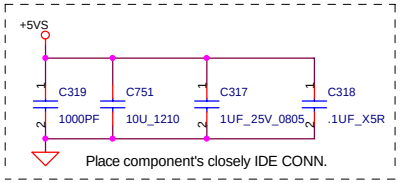

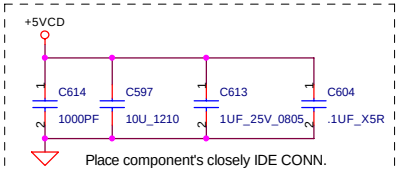

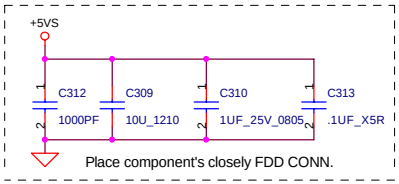

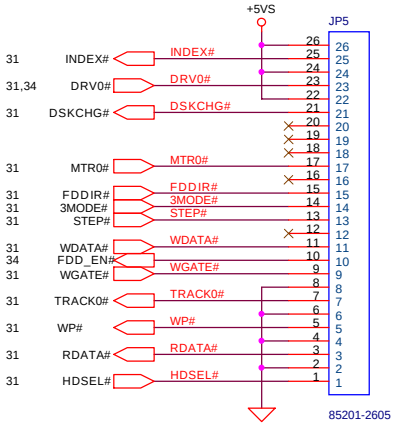

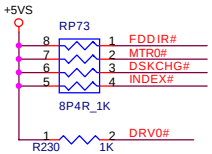

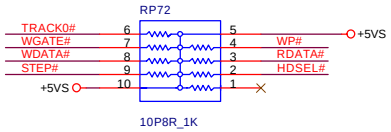

THIS SHEET OF ENGINEERING DRAWING IS THE PROPRIETARY PROPERTY OF COMPAL ELECTRONICS, INC. AND CONTAINS CONFIDENTIAL AND TRADE SECRET INFORMATION. THIS SHEET MAY NOT BE TRANSFERED FROM THE CUSTODY OF THE COMPETENT DIVISION OF R&D DEPARTMENT EXCEPT AS AUTHORIZED BY COMPAL ELECTRONICS, INC. NEITHER THIS SHEET NOR THE INFORMATION IT CONTAINS MAY BE USED BY OR DISCLOSED TO ANY THIRD PARTY WITHOUT PRIOR WRITTEN CONSENT OF COMPAL ELECTRONICS, INC.

Compal Electronics, Inc

Title	IDE/ FDD MODULE CONN.	
Size B	Document Number LA1731	Rev 1.0
Date: ¬P期二, 十二月 31, 2002	Sheet 29 of 46	

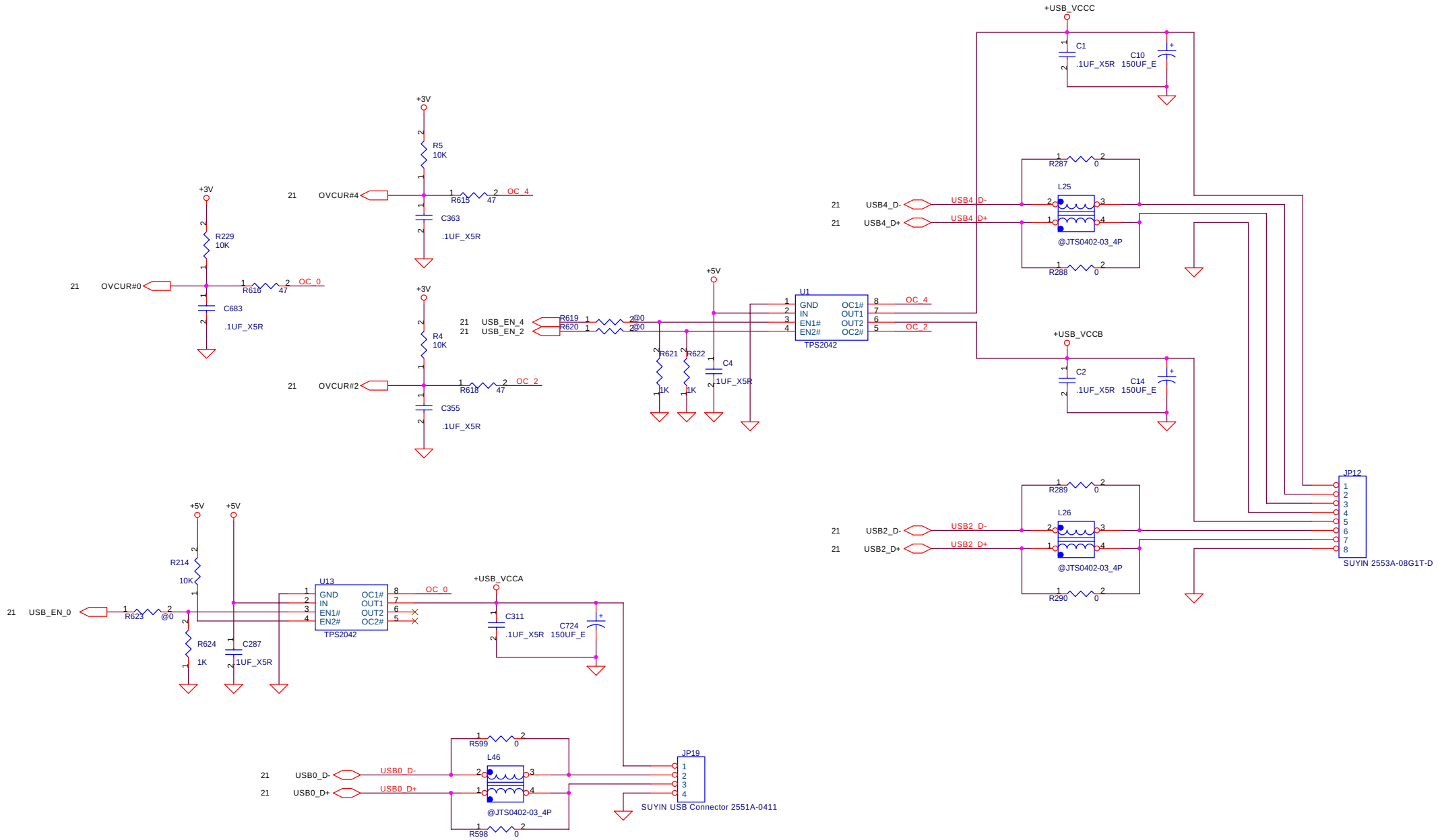

THIS SHEET OF ENGINEERING DRAWING IS THE PROPRIETARY PROPERTY OF COMPAL ELECTRONICS, INC. AND CONTAINS CONFIDENTIAL AND TRADE SECRET INFORMATION. THIS SHEET MAY NOT BE TRANSFERED FROM THE CUSTODY OF THE COMPETENT DIVISION OF R&D DEPARTMENT EXCEPT AS AUTHORIZED BY COMPAL ELECTRONICS, INC. NEITHER THIS SHEET NOR THE INFORMATION IT CONTAINS MAY BE USED BY OR DISCLOSED TO ANY THIRD PARTY WITHOUT PRIOR WRITTEN CONSENT OF COMPAL ELECTRONICS, INC.

Compal Electronics, Inc

Title	USB & FIR	
Size B	Document Number LA1731	Rev 1.0
Date: ¬P期二, 十二月 31, 2002	Sheet 30 of 46	

SUPER I/O SMsC FDC47N227

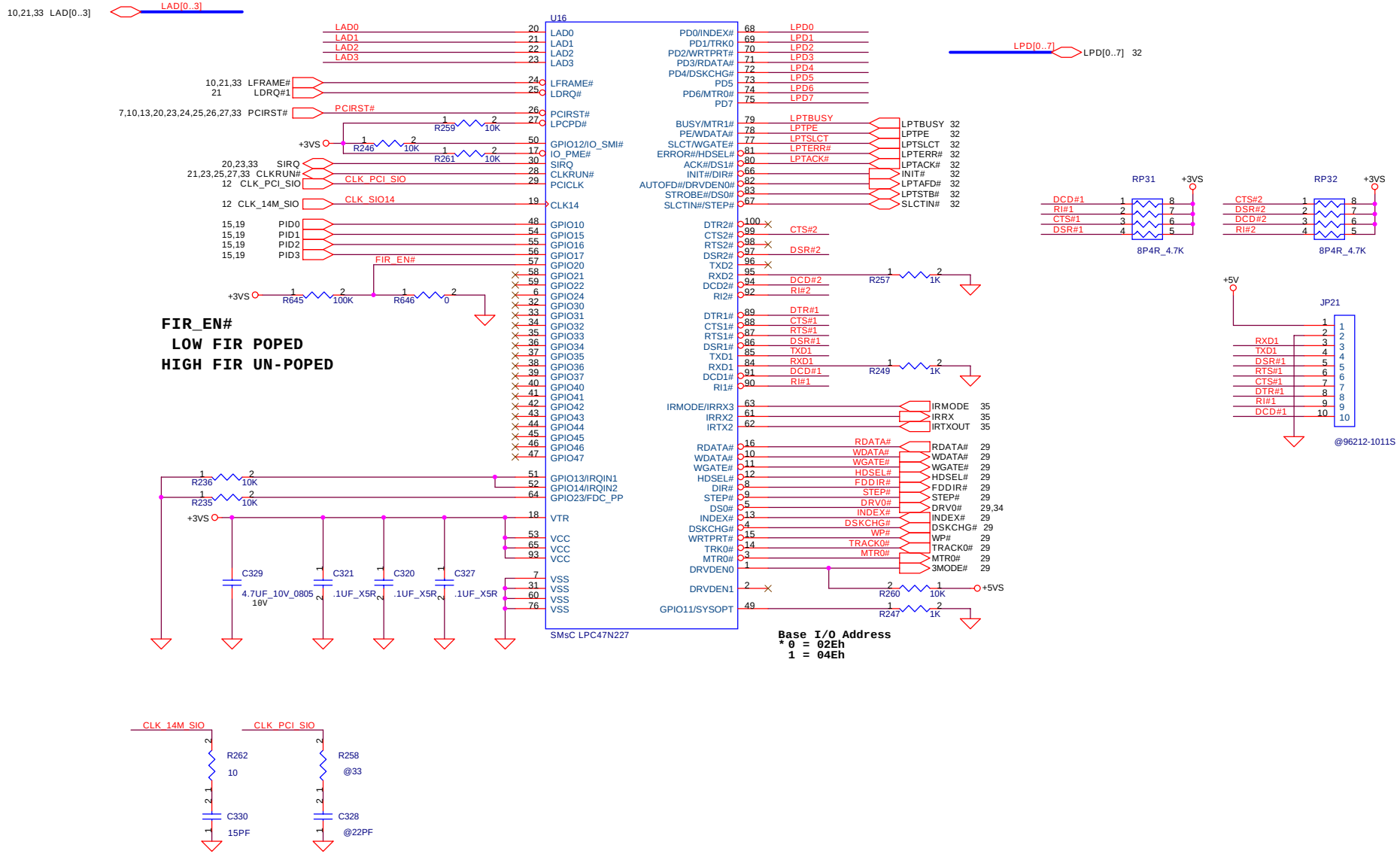

Compal Electronics, Inc.		
Title: LPC SUPER I/O SMSC FDC47N227		
Size: B	Document Number: LA1731	Rev: 1.0
Date: ¬P期二, 十二月 31, 2002	Sheet 31 of 46	

PROPRIETARY NOTE THIS SHEET OF ENGINEERING DRAWING IS THE PROPRIETARY PROPERTY OF COMPAL ELECTRONICS, INC. AND CONTAINS CONFIDENTIAL AND TRADE SECRET INFORMATION. THIS SHEET MAY NOT BE TRANSFERRED FROM THE CUSTODY OF THE COMPETENT DIVISION OF R&D DEPARTMENT EXCEPT AS AUTHORIZED BY COMPAL ELECTRONICS, INC. NEITHER THIS SHEET NOR THE INFORMATION IT CONTAINS MAY BE USED BY OR DISCLOSED TO ANY THIRD PARTY WITHOUT PRIOR WRITTEN CONSENT OF COMPAL ELECTRONICS, INC.

FAN CONN.

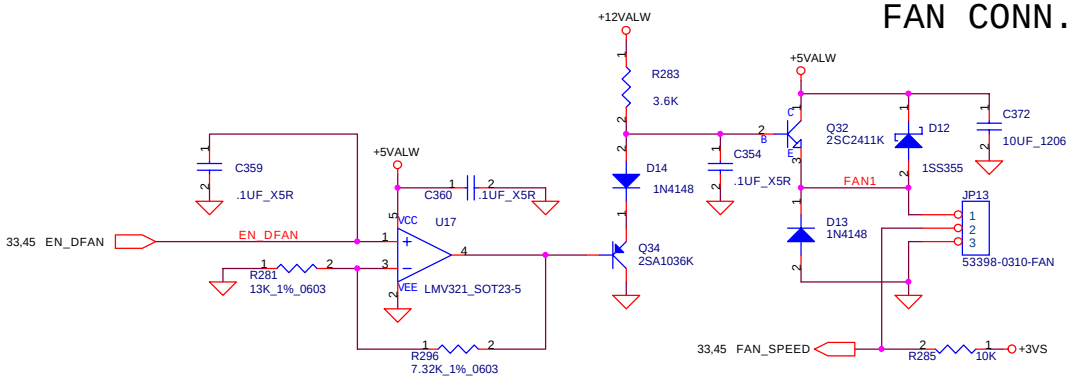

PARALLEL PORT

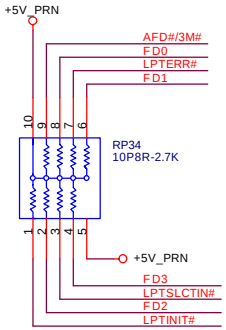

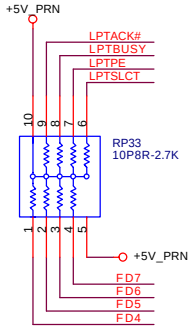

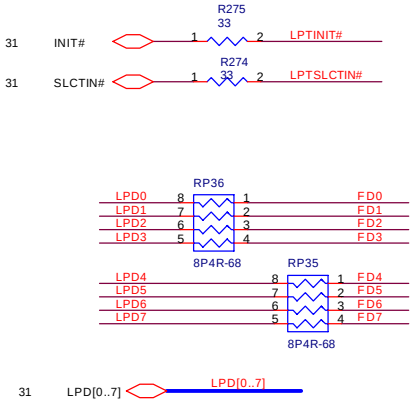

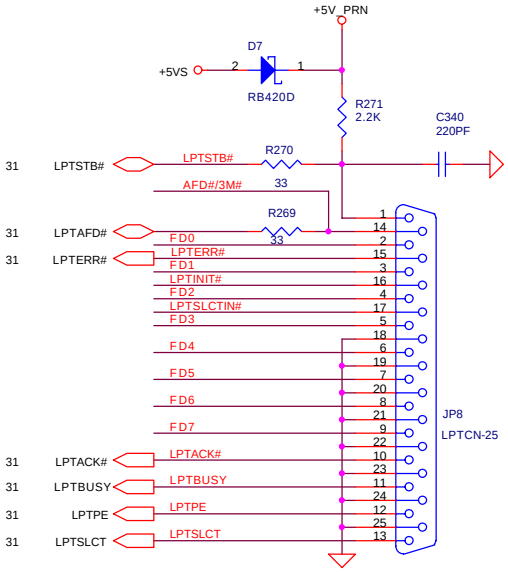

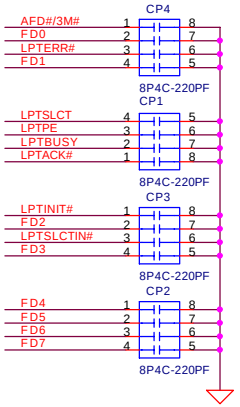

THIS SHEET OF ENGINEERING DRAWING IS THE PROPRIETARY PROPERTY OF COMPAL ELECTRONICS, INC. AND CONTAINS CONFIDENTIAL AND TRADE SECRET INFORMATION. THIS SHEET MAY NOT BE TRANSFERED FROM THE CUSTODY OF THE COMPETENT DIVISION OF R&D DEPARTMENT EXCEPT AS AUTHORIZED BY COMPAL ELECTRONICS, INC. NEITHER THIS SHEET NOR THE INFORMATION IT CONTAINS MAY BE USED BY OR DISCLOSED TO ANY THIRD PARTY WITHOUT PRIOR WRITTEN CONSENT OF COMPAL ELECTRONICS, INC.

Compal Electronics, Inc.

Title	PARALLEL PORT	
Size B	Document Number LA1731	Rev 1.0
Date: ¬P期二, 十二月 31, 2002	Sheet 32 of 46	

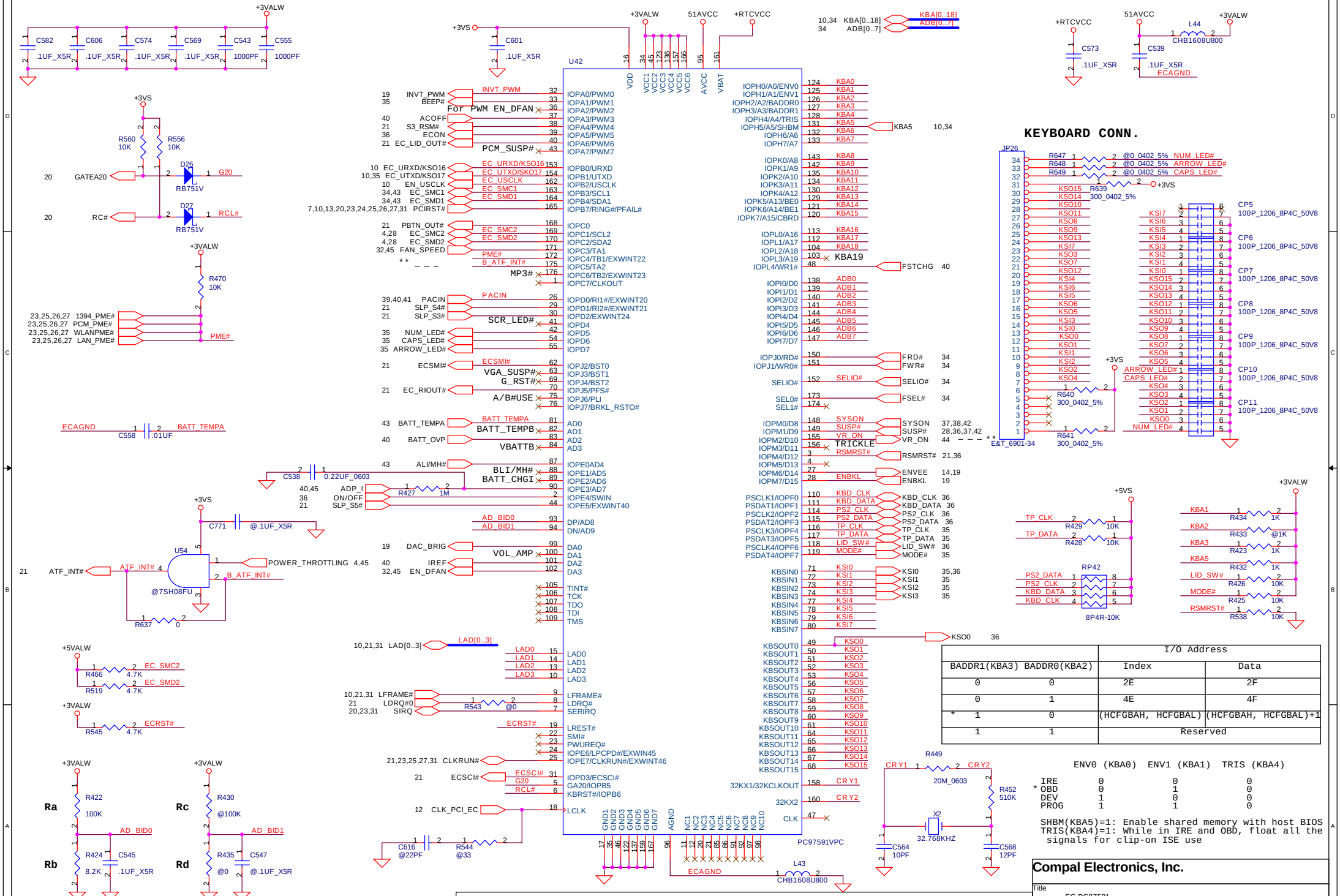

	I/O Address	
BADDR1(KBA3) BADDR0(KBA2)	Index	Data
0 0	2E	2F
0 1	4E	4F
* 1 0	(HCFGBAH, HCFGBAL)	(HCFGBAH, HCFGBAL)+1
1 1	Reserved	

	ENV0 (KBA0)	ENV1 (KBA1)	TRIS (KBA4)
IRE	0	0	0
* OBD	0	1	0
DEV	1	0	0
PROG	1	1	0

SHBM(KBA5)=1: Enable shared memory with host BIOS
TRIS(KBA4)=1: While in IRE and OBD, float all the signals for clip-on ISE use

PROPRIETARY NOTE THIS SHEET OF ENGINEERING DRAWING IS THE PROPRIETARY PROPERTY OF COMPAL ELECTRONICS, INC. AND CONTAINS CONFIDENTIAL AND TRADE SECRET INFORMATION. THIS SHEET MAY NOT BE TRANSFERRED FROM THE CUSTODY OF THE COMPETENT DIVISION OF R&D DEPARTMENT EXCEPT AS AUTHORIZED BY COMPAL ELECTRONICS, INC. NEITHER THIS SHEET NOR THE INFORMATION IT CONTAINS MAY BE USED BY OR DISCLOSED TO ANY THIRD PARTY WITHOUT PRIOR WRITTEN CONSENT OF COMPAL ELECTRONICS, INC.

Compal Electronics, Inc.

Title: EC PC87591

Size: B | Document Number: LA1731 | Rev: 1.0

Date: ¬P期三, 十二月 31, 2002 | Sheet 33 of 46

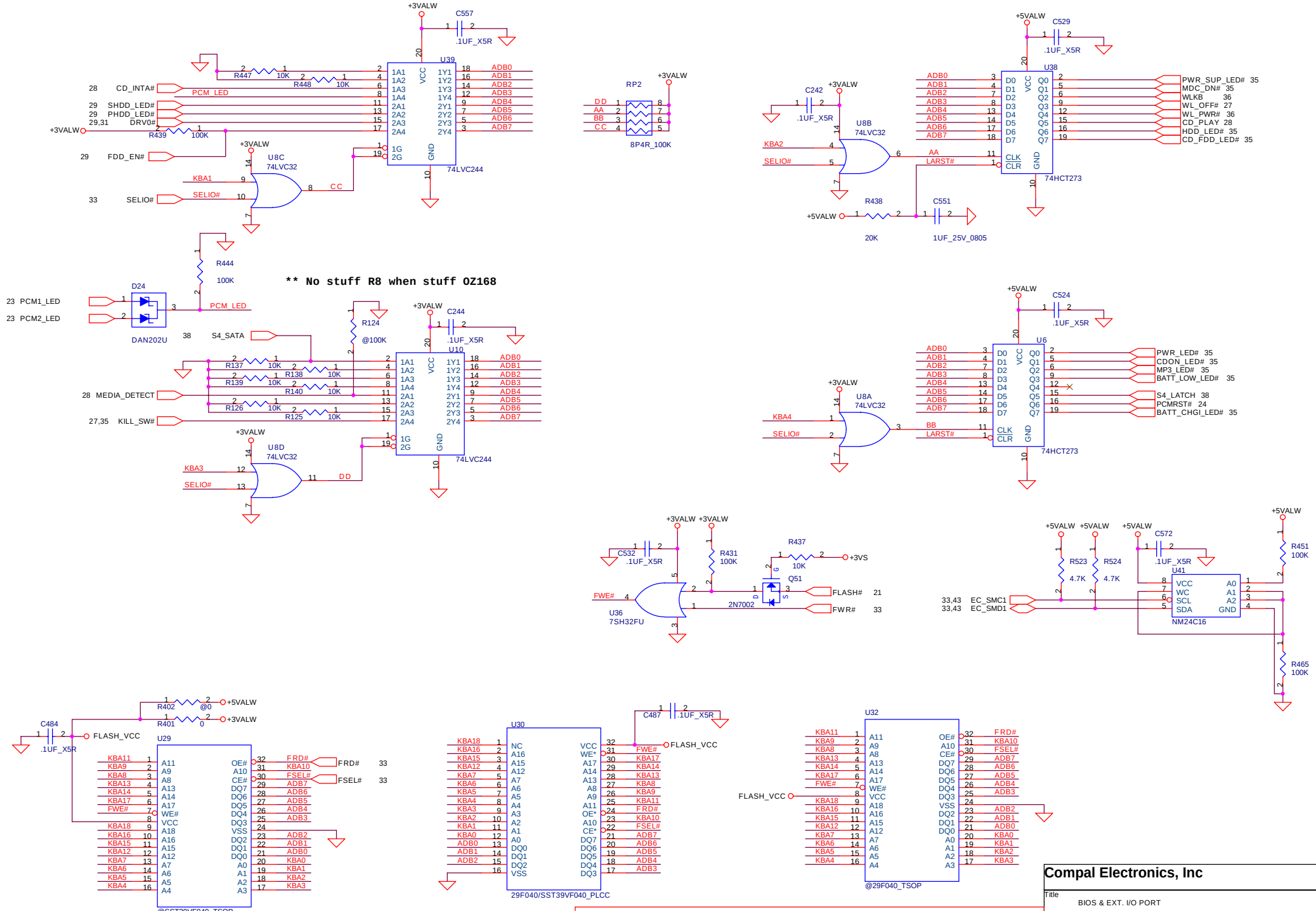

THIS SHEET OF ENGINEERING DRAWING IS THE PROPRIETARY PROPERTY OF COMPAL ELECTRONICS, INC. AND CONTAINS CONFIDENTIAL AND TRADE SECRET INFORMATION. THIS SHEET MAY NOT BE TRANSFERED FROM THE CUSTODY OF THE COMPETENT DIVISION OF R&D DEPARTMENT EXCEPT AS AUTHORIZED BY COMPAL ELECTRONICS, INC. NEITHER THIS THIS SHEET NOR THE INFORMATION IT CONTAINS MAY BE USED BY OR DISCLOSED TO ANY THIRD PARTY WITHOUT PRIOR WRITTEN CONSENT OF COMPAL ELECTRONICS, INC.

Compal Electronics, Inc

Title	BIOS & EXT. I/O PORT	
Size B	Document Number LA1731	Rev 1.0
Date: ¬P期二, 十二月 31, 2002	Sheet 34 of 46	

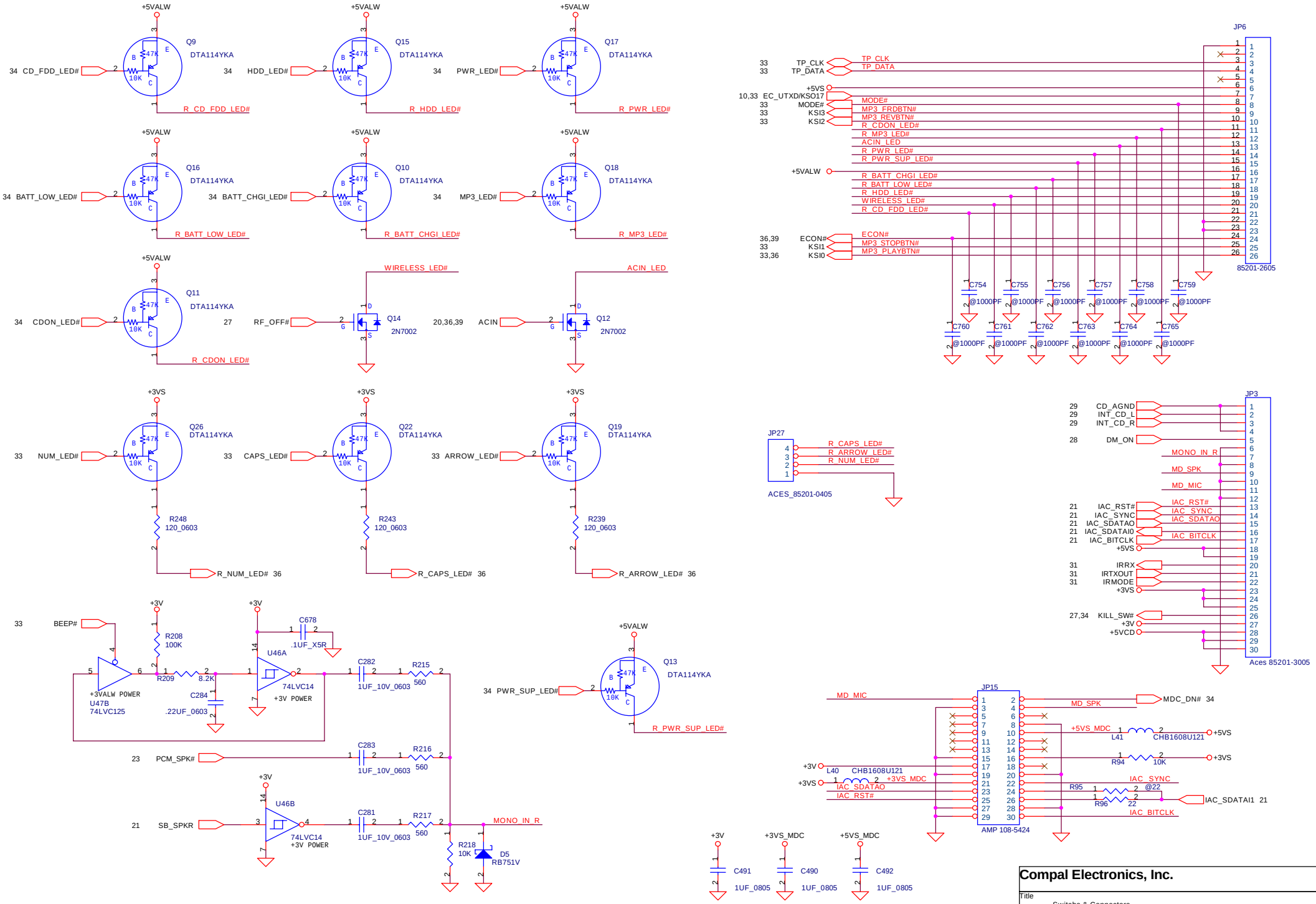

THIS SHEET OF ENGINEERING DRAWING IS THE PROPRIETARY PROPERTY OF COMPAL ELECTRONICS, INC. AND CONTAINS CONFIDENTIAL AND TRADE SECRET INFORMATION. THIS SHEET MAY NOT BE TRANSFERED FROM THE CUSTODY OF THE COMPETENT DIVISION OF R&D DEPARTMENT EXCEPT AS AUTHORIZED BY COMPAL ELECTRONICS, INC. NEITHER THIS SHEET NOR THE INFORMATION IT CONTAINS MAY BE USED BY OR DISCLOSED TO ANY THIRD PARTY WITHOUT PRIOR WRITTEN CONSENT OF COMPAL ELECTRONICS, INC.

Compal Electronics, Inc.

Title	Switchs & Connectors	
Size B	Document Number LA1731	Rev 1.0
Date: ¬P期三, 十二月 31, 2002	Sheet 35 of 46	

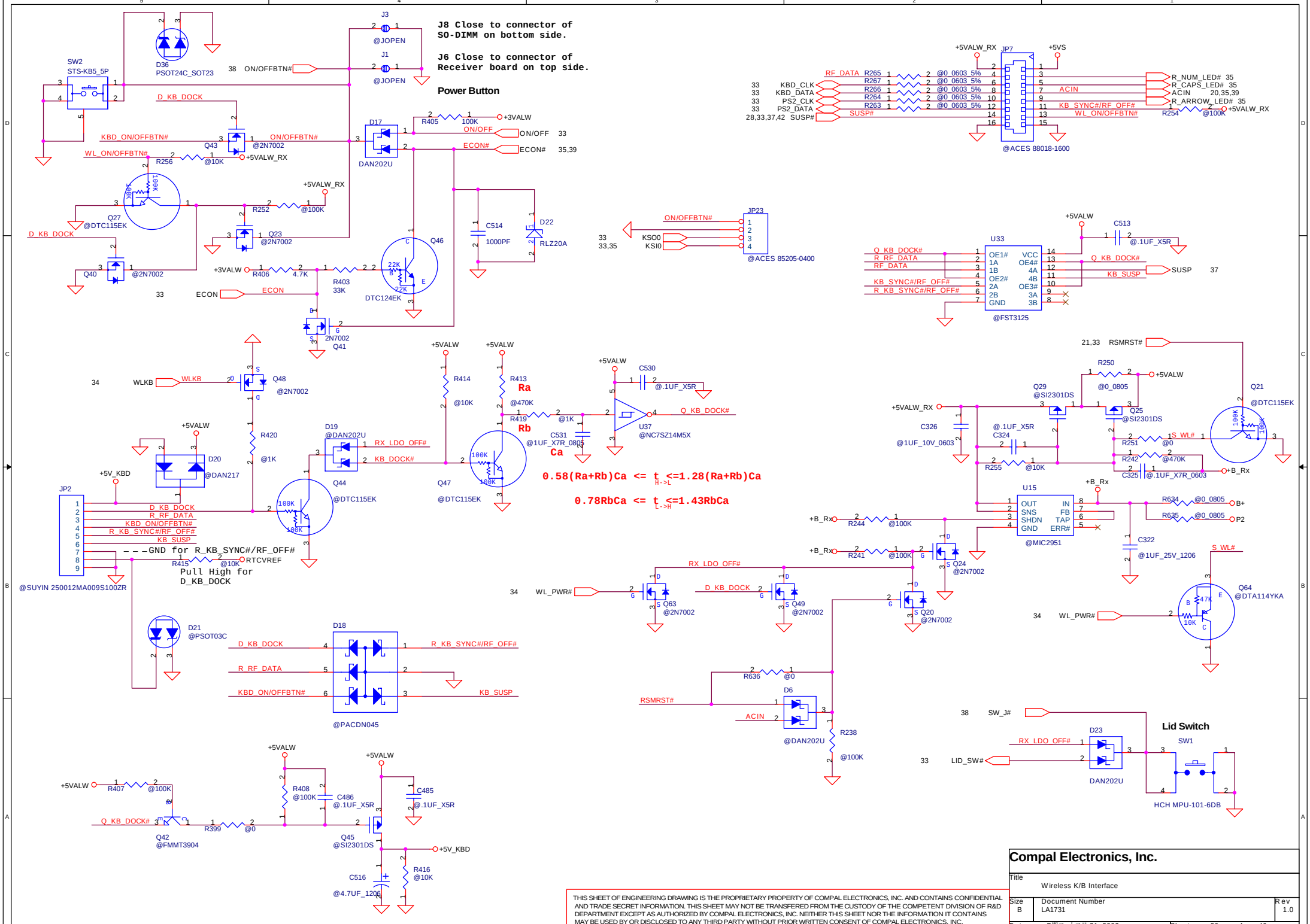

THIS SHEET OF ENGINEERING DRAWING IS THE PROPRIETARY PROPERTY OF COMPAL ELECTRONICS, INC. AND CONTAINS CONFIDENTIAL AND TRADE SECRET INFORMATION. THIS SHEET MAY NOT BE TRANSFERED FROM THE CUSTODY OF THE COMPETENT DIVISION OF R&D DEPARTMENT EXCEPT AS AUTHORIZED BY COMPAL ELECTRONICS, INC. NEITHER THIS SHEET NOR THE INFORMATION IT CONTAINS MAY BE USED BY OR DISCLOSED TO ANY THIRD PARTY WITHOUT PRIOR WRITTEN CONSENT OF COMPAL ELECTRONICS, INC.

Compal Electronics, Inc.

Title	Wireless K/B Interface	
Size B	Document Number LA1731	Rev 1.0
Date: ¬P期二, 十二月 31, 2002	Sheet 36 of 46	

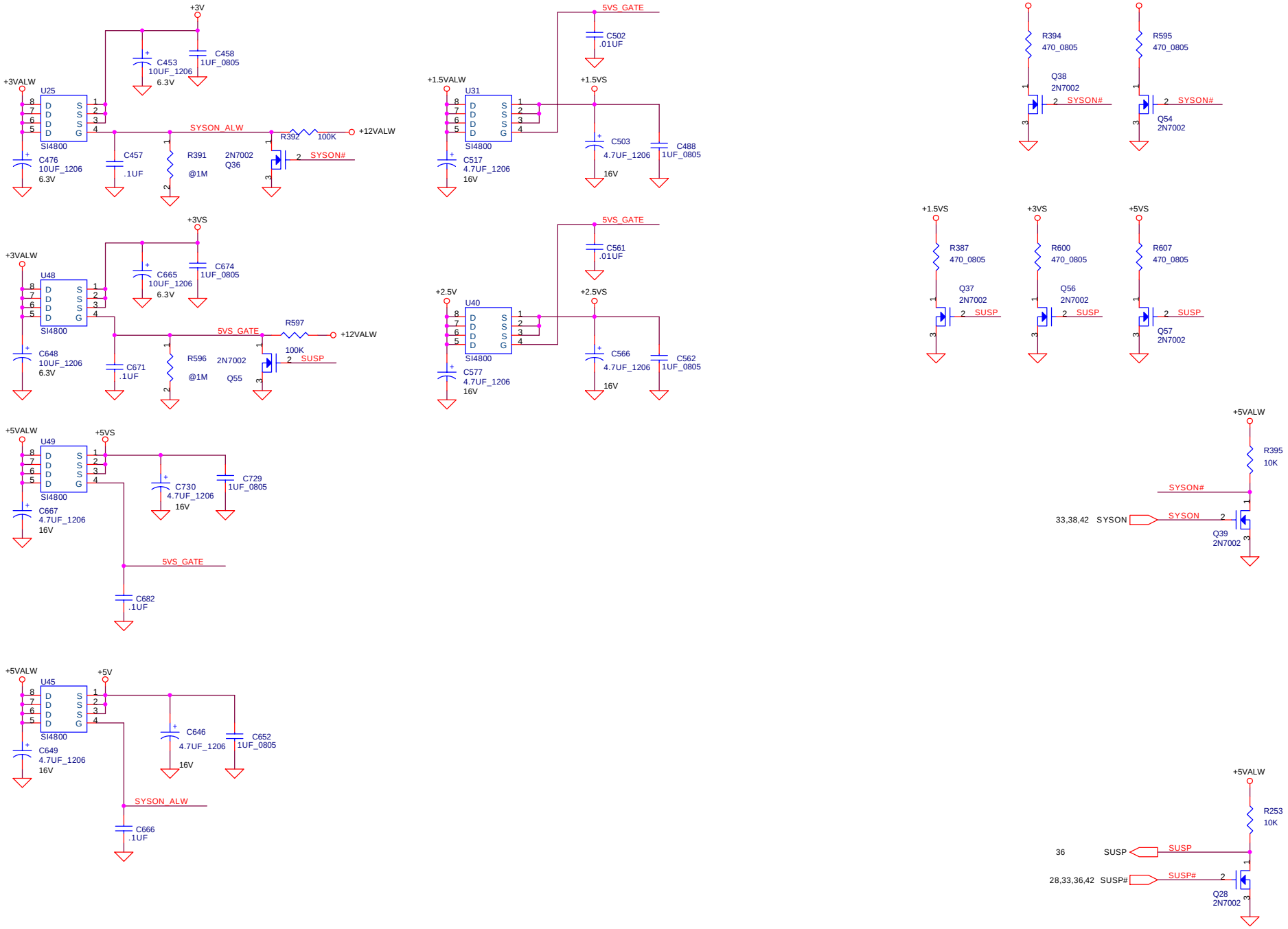

PROPRIETARY NOTE THIS SHEET OF ENGINEERING DRAWING IS THE PROPRIETARY PROPERTY OF COMPAL ELECTRONICS, INC. AND CONTAINS CONFIDENTIAL AND TRADE SECRET INFORMATION. THIS SHEET MAY NOT BE TRANSFERRED FROM THE CUSTODY OF THE COMPETENT DIVISION OF R&D DEPARTMENT EXCEPT AS AUTHORIZED BY COMPAL ELECTRONICS, INC. NEITHER THIS SHEET NOR THE INFORMATION IT CONTAINS MAY BE USED BY OR DISCLOSED TO ANY THIRD PARTY WITHOUT PRIOR WRITTEN CONSENT OF COMPAL ELECTRONICS, INC.

Compal Electronics, Inc.

Title	POWER CONTROL CKT
Size B	Document Number LA1731
Rev	1.0
Date:	¬P期四, 一月 02, 2003
Sheet	37 of 46

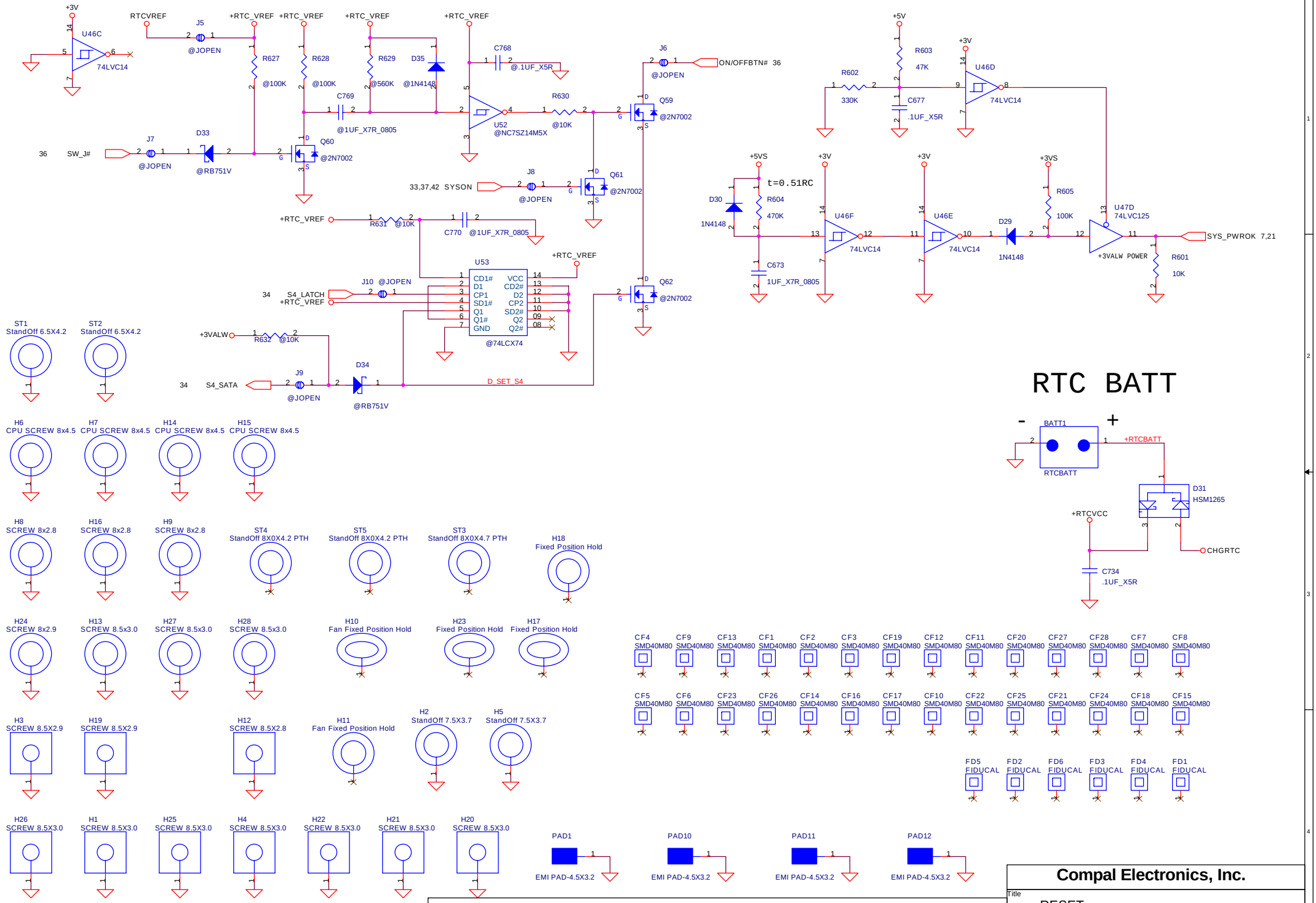

PROPRIETARY NOTE THIS SHEET OF ENGINEERING DRAWING IS THE PROPRIETARY PROPERTY OF COMPAL ELECTRONICS, INC. AND CONTAINS CONFIDENTIAL AND TRADE SECRET INFORMATION. THIS SHEET MAY NOT BE TRANSFERRED FROM THE CUSTODY OF THE COMPETENT DIVISION OF R&D DEPARTMENT EXCEPT AS AUTHORIZED BY COMPAL ELECTRONICS, INC. NEITHER THIS SHEET NOR THE INFORMATION IT CONTAINS MAY BE USED BY OR DISCLOSED TO ANY THIRD PARTY WITHOUT PRIOR WRITTEN CONSENT OF COMPAL ELECTRONICS, INC.

Compal Electronics, Inc.

Title	RESET
Size B	Document Number LA1731
Rev	1.0
Date:	¬P期二, 十二月 31, 2002
Sheet	38 of 46

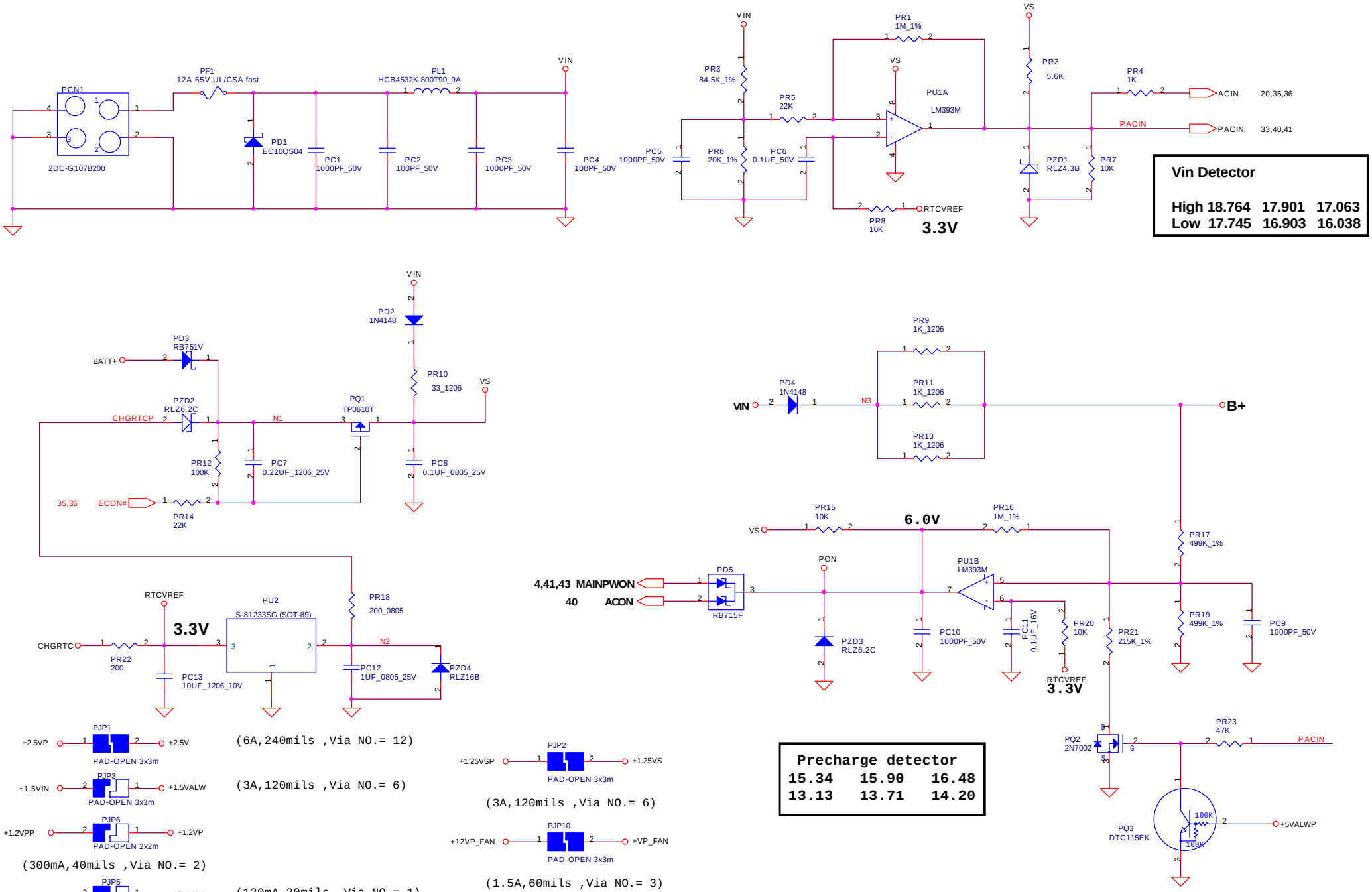

THIS SHEET OF ENGINEERING DRAWING IS THE PROPRIETARY PROPERTY OF COMPAL ELECTRONICS, INC. AND CONTAINS CONFIDENTIAL AND TRADE SECRET INFORMATION. THIS SHEET MAY NOT BE TRANSFERRED FROM THE CUSTODY OF THE COMPETENT DIVISION OF R&D DEPARTMENT EXCEPT AS AUTHORIZED BY COMPAL ELECTRONICS, INC. NEITHER THIS SHEET NOR THE INFORMATION IT CONTAINS MAY BE USED BY OR DISCLOSED TO ANY THIRD PARTY WITHOUT PRIOR WRITTEN CONSENT OF COMPAL ELECTRONICS, INC.

Compal Electronics, Inc.			
Title: DCIN & DETECTOR			
Size: B	Document Number: LA1611		Rev: 1.0
Date: 一月三, 十二月 31, 2002	Sheet 39 of 46		

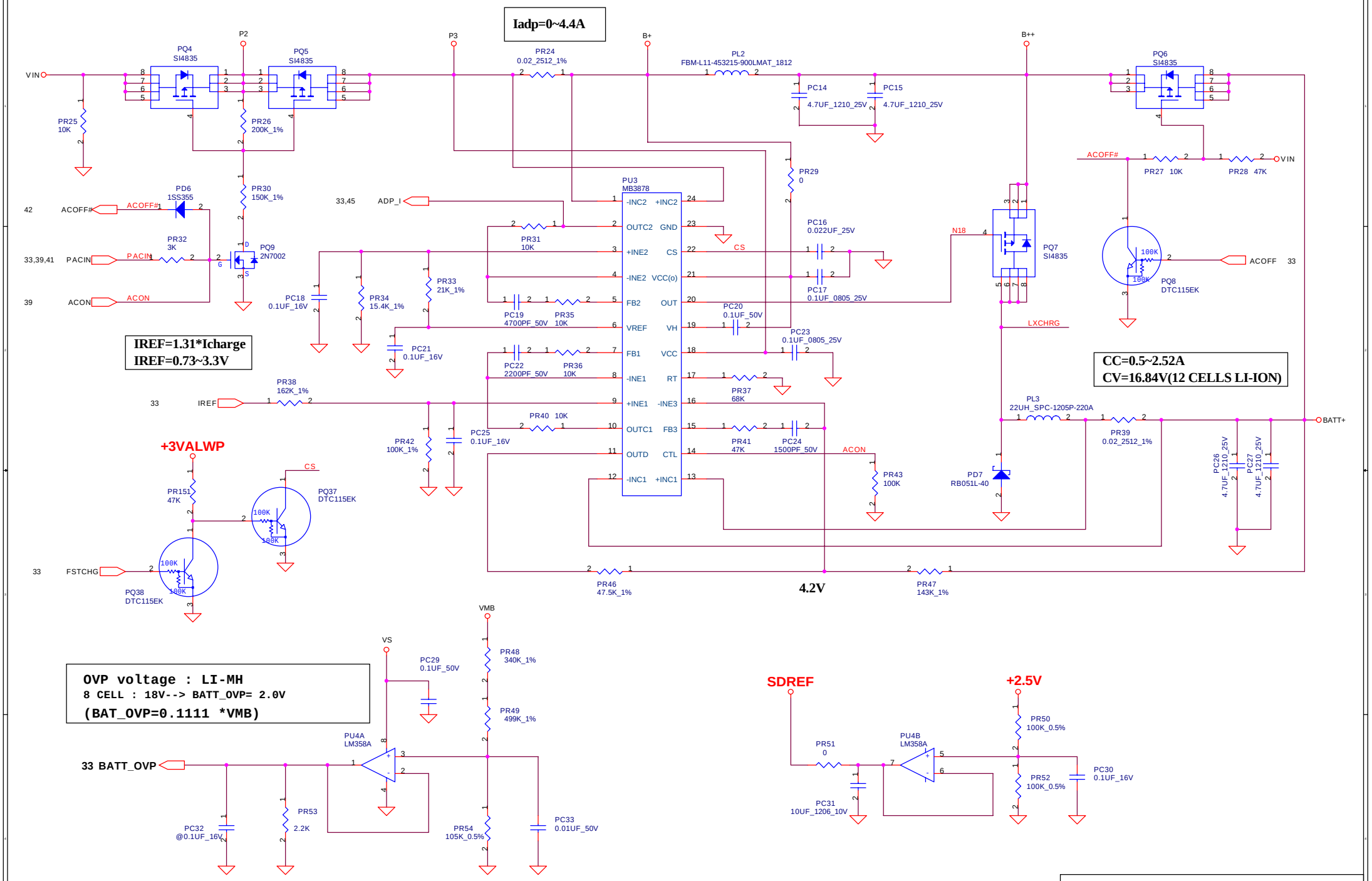

THIS SHEET OF ENGINEERING DRAWING IS THE PROPRIETARY PROPERTY OF COMPAL ELECTRONICS, INC. AND CONTAINS CONFIDENTIAL AND TRADE SECRET INFORMATION. THIS SHEET MAY NOT BE TRANSFERRED FROM THE CUSTODY OF THE COMPETENT DIVISION OF R&D DEPARTMENT EXCEPT AS AUTHORIZED BY COMPAL ELECTRONICS, INC. NEITHER THIS SHEET NOR THE INFORMATION IT CONTAINS MAY BE USED BY OR DISCLOSED TO ANY THIRD PARTY WITHOUT PRIOR WRITTEN CONSENT OF COMPAL ELECTRONICS, INC.

Compal Electronics, Inc.	
Title	CHARGER
Size B	Document Number LA1611
Rev	1.0
Date: ¬P期三, 十二月 31, 2002	Sheet 40 of 46

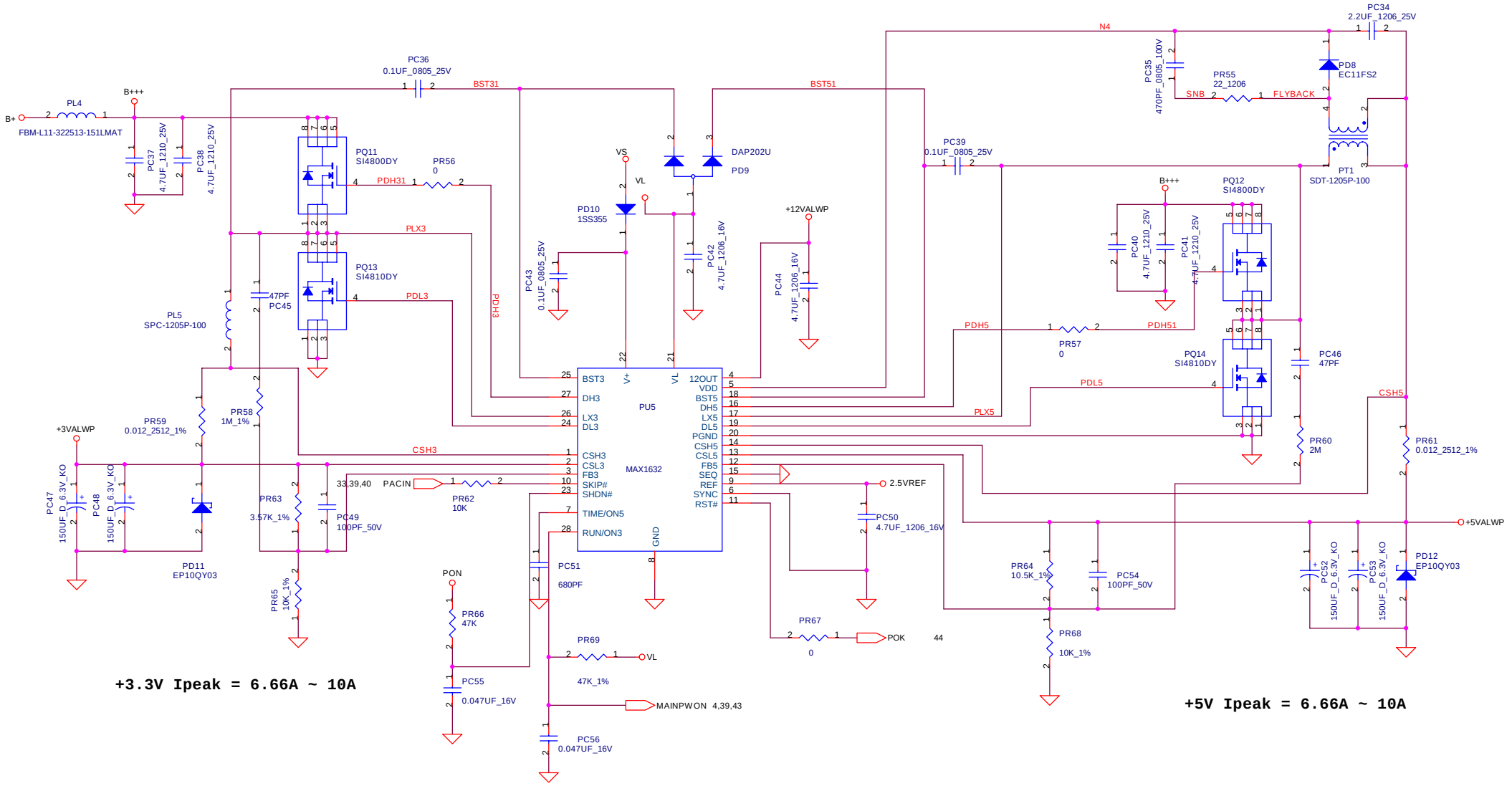

THIS SHEET OF ENGINEERING DRAWING IS THE PROPRIETARY PROPERTY OF COMPAL ELECTRONICS, INC. AND CONTAINS CONFIDENTIAL AND TRADE SECRET INFORMATION. THIS SHEET MAY NOT BE TRANSFERRED FROM THE CUSTODY OF THE COMPETENT DIVISION OF R&D DEPARTMENT EXCEPT AS AUTHORIZED BY COMPAL ELECTRONICS, INC. NEITHER THIS SHEET NOR THE INFORMATION IT CONTAINS MAY BE USED BY OR DISCLOSED TO ANY THIRD PARTY WITHOUT PRIOR WRITTEN CONSENT OF COMPAL ELECTRONICS, INC.

Compal Electronics, Inc.

Title: **5V/3.3V/12V**

Size: B | Document Number: **LA1611** | Rev: **1.0**

Date: 一月星期三, 十二月 31, 2002 | Sheet 41 of 46

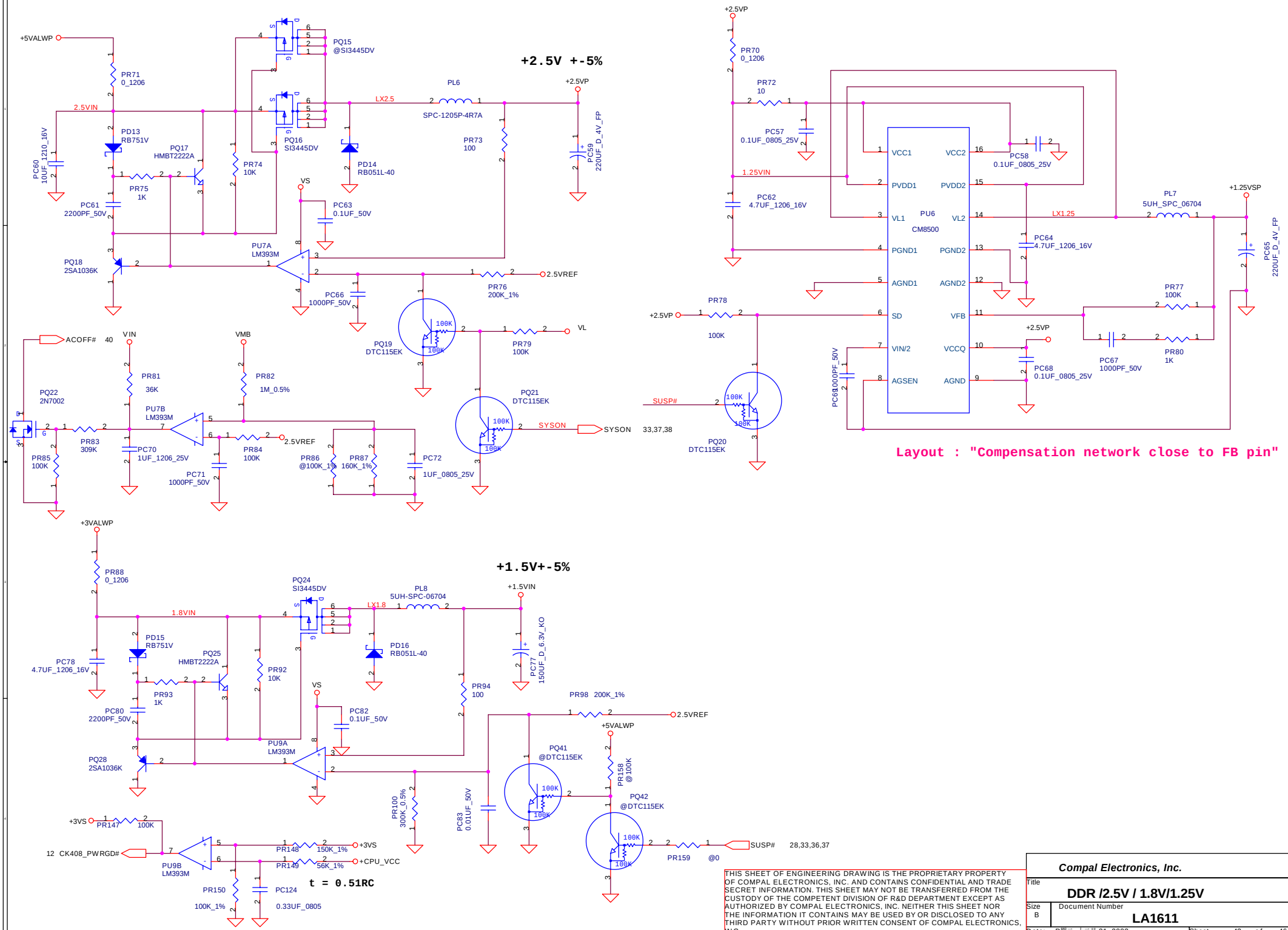

THIS SHEET OF ENGINEERING DRAWING IS THE PROPRIETARY PROPERTY OF COMPAL ELECTRONICS, INC. AND CONTAINS CONFIDENTIAL AND TRADE SECRET INFORMATION. THIS SHEET MAY NOT BE TRANSFERRED FROM THE CUSTODY OF THE COMPETENT DIVISION OF R&D DEPARTMENT EXCEPT AS AUTHORIZED BY COMPAL ELECTRONICS, INC. NEITHER THIS SHEET NOR THE INFORMATION IT CONTAINS MAY BE USED BY OR DISCLOSED TO ANY THIRD PARTY WITHOUT PRIOR WRITTEN CONSENT OF COMPAL ELECTRONICS, INC.

Compal Electronics, Inc.

Title: **DDR /2.5V / 1.8V/1.25V**

Size: B | Document Number: **LA1611** | Rev: **1.0**

Date: 一月三, 十二月 31, 2002 | Sheet 42 of 46

PH1 under CPU botten side :
CPU thermal protection at 82 degree C
Recovery at 50 degree C

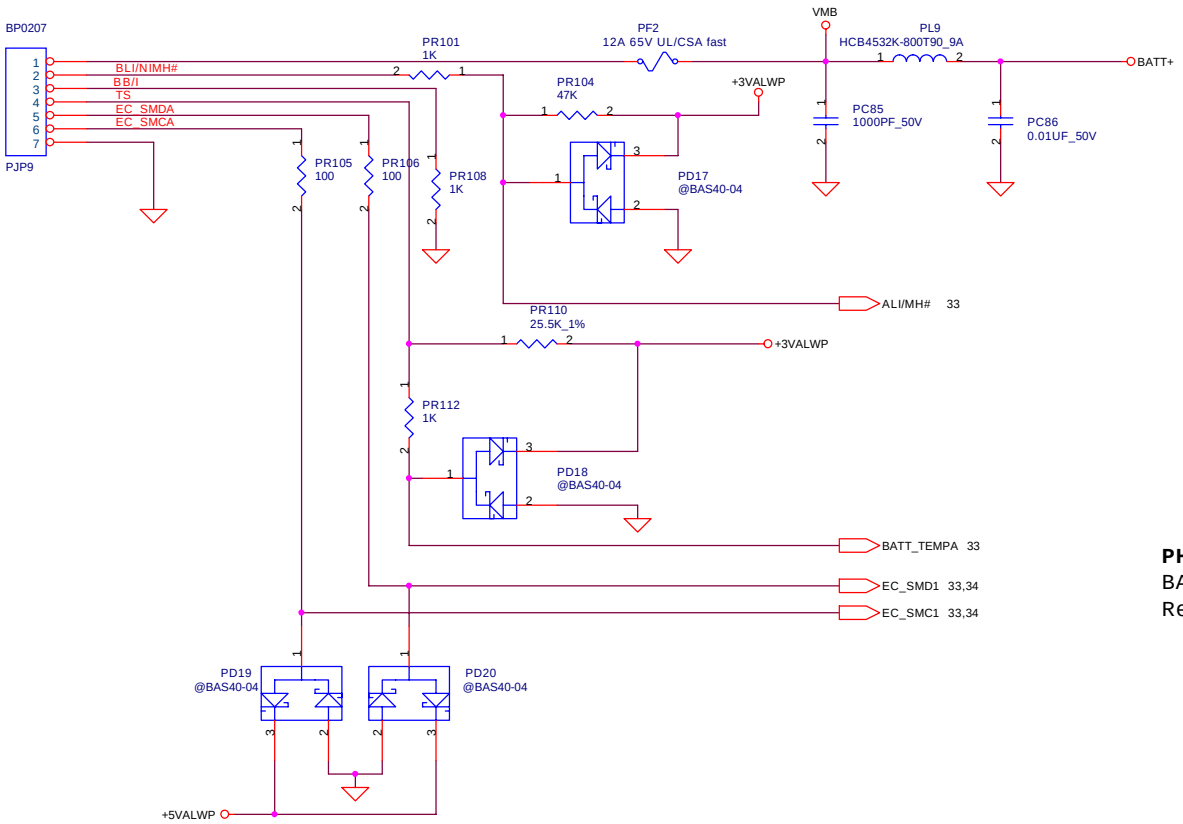

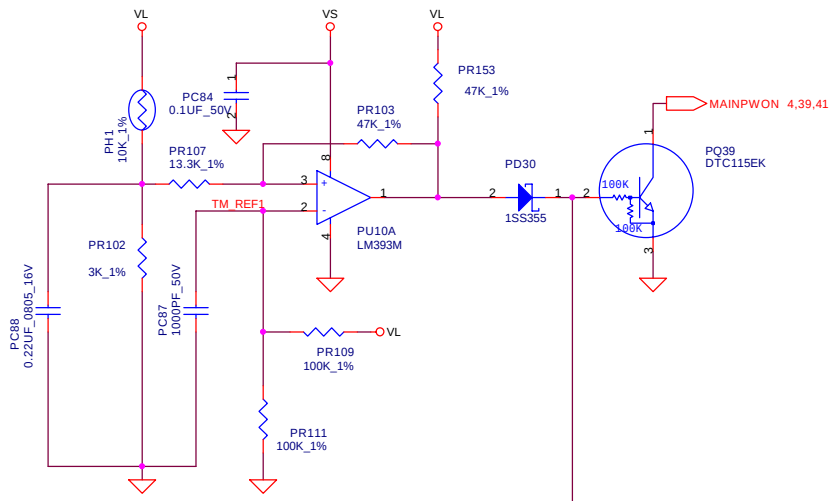

PH2 near main Battery CONN :
BAT. thermal protection at 82 degree C
Recovery at 57(58) degree C

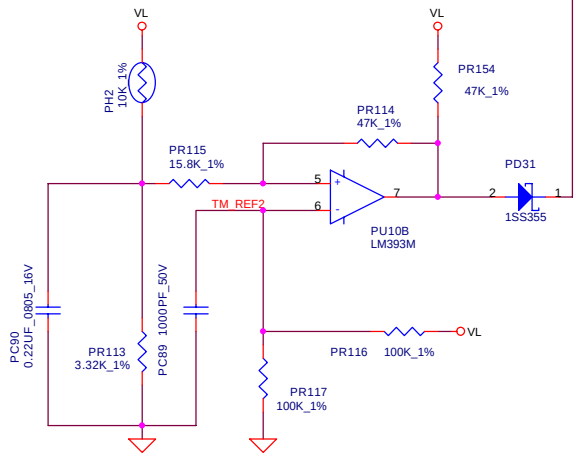

THIS SHEET OF ENGINEERING DRAWING IS THE PROPRIETARY PROPERTY OF COMPAL ELECTRONICS, INC. AND CONTAINS CONFIDENTIAL AND TRADE SECRET INFORMATION. THIS SHEET MAY NOT BE TRANSFERRED FROM THE CUSTODY OF THE COMPETENT DIVISION OF R&D DEPARTMENT EXCEPT AS AUTHORIZED BY COMPAL ELECTRONICS, INC. NEITHER THIS SHEET NOR THE INFORMATION IT CONTAINS MAY BE USED BY OR DISCLOSED TO ANY THIRD PARTY WITHOUT PRIOR WRITTEN CONSENT OF COMPAL ELECTRONICS, INC.

Compal Electronics, Inc.	
Title	BATTERY CONN / OTP
Size B	Document Number LA1611
Rev	1.0
Date: 一月三, 十二月 31, 2002	Sheet 43 of 46

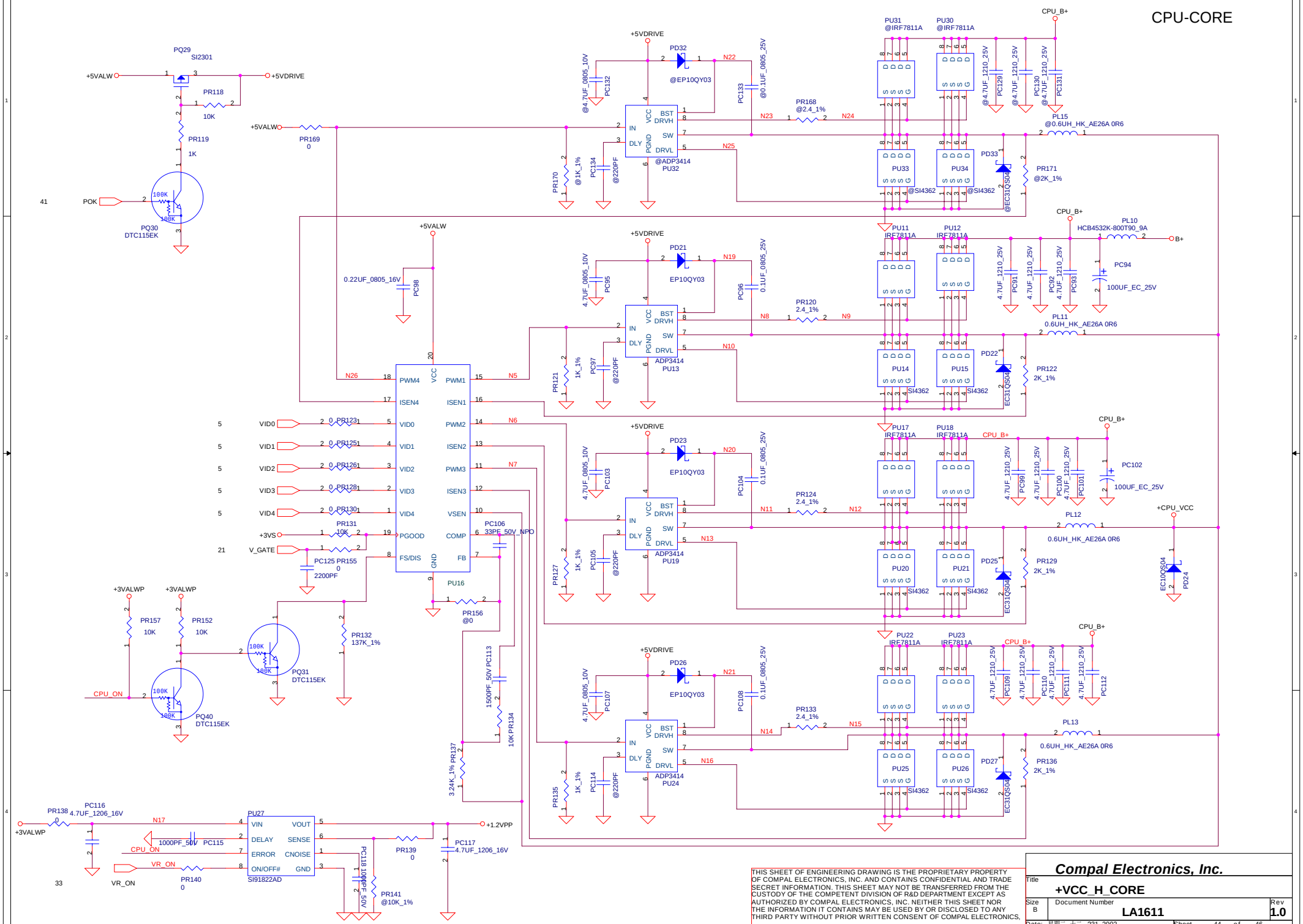

THIS SHEET OF ENGINEERING DRAWING IS THE PROPRIETARY PROPERTY OF COMPAL ELECTRONICS, INC. AND CONTAINS CONFIDENTIAL AND TRADE SECRET INFORMATION. THIS SHEET MAY NOT BE TRANSFERRED FROM THE CUSTODY OF THE COMPETENT DIVISION OF R&D DEPARTMENT EXCEPT AS AUTHORIZED BY COMPAL ELECTRONICS, INC. NEITHER THIS SHEET NOR THE INFORMATION IT CONTAINS MAY BE USED BY OR DISCLOSED TO ANY THIRD PARTY WITHOUT PRIOR WRITTEN CONSENT OF COMPAL ELECTRONICS.

Compal Electronics, Inc.

Title: +VCC_H_CORE

Size: B | Document Number: LA1611 | Rev: 1.0

Date: 星期二, 十二 ?31, 2002 | Sheet 44 of 46

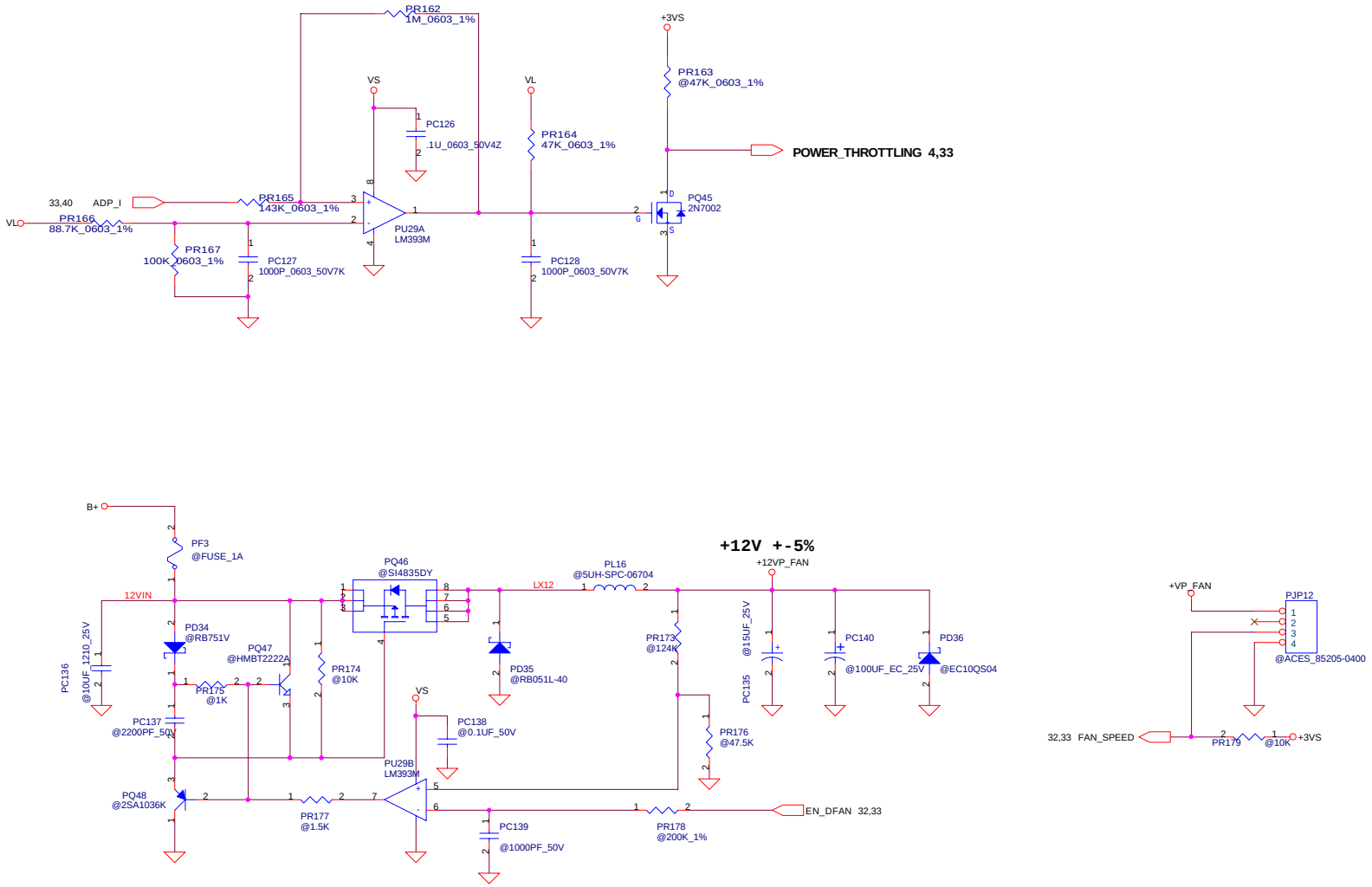

THIS SHEET OF ENGINEERING DRAWING IS THE PROPRIETARY PROPERTY OF COMPAL ELECTRONICS, INC. AND CONTAINS CONFIDENTIAL AND TRADE SECRET INFORMATION. THIS SHEET MAY NOT BE TRANSFERRED FROM THE CUSTODY OF THE COMPETENT DIVISION OF R&D DEPARTMENT EXCEPT AS AUTHORIZED BY COMPAL ELECTRONICS, INC. NEITHER THIS SHEET NOR THE INFORMATION IT CONTAINS MAY BE USED BY OR DISCLOSED TO ANY THIRD PARTY WITHOUT PRIOR WRITTEN CONSENT OF COMPAL ELECTRONICS.

Compal Electronics, Inc.

Title: **Throttling**

Size: B | Document Number: **BTR80 LA1661** | Rev: **1.0**

Date: 星期二, 十二 ?31, 2002 | Sheet 45 of 46

Manchester 200Z PIR LIST

********** Rev0.1 PIR List **********

12/16/02 P.16 PR145 124K Change to 97.6K
12/16/02 P.39 PCN1 Change to 2DC-G107B200
12/16/02 P.44 PR169 Change to @0
12/16/02 P.45 PR162, PR164, PR165, PR166, PR167, PC126, PC127, PC128, PQ45, PU29A Remove @

12/17/02 P.33

12/19/02 P.4 R92 Remove @

12/31/02 P.37 C682, C457, C666, C671 Change to 0.1u // for Panel Flash When AC-IN

PROPRIETARY NOTE THIS SHEET OF ENGINEERING DRAWING IS THE PROPRIETARY PROPERTY OF COMPAL ELECTRONICS, INC. AND CONTAINS CONFIDENTIAL AND TRADE SECRET INFORMATION. THIS SHEET MAY NOT BE TRANSFERRED FROM THE CUSTODY OF THE COMPETENT DIVISION OF R&D DEPARTMENT EXCEPT AS AUTHORIZED BY COMPAL ELECTRONICS, INC. NEITHER THIS SHEET NOR THE INFORMATION IT CONTAINS MAY BE USED BY OR DISCLOSED TO ANY THIRD PARTY WITHOUT PRIOR WRITTEN CONSENT OF COMPAL ELECTRONICS, INC.

Compal Electronics, Inc.

Title	ATR80 PIR LIST	
Size B	Document Number LA1731	Rev 1.0
Date: ¬P期四, 一月 02, 2003	Sheet 46 of 46	