HTW2E

LA-3201P REV 1.0 Schematic

UFC-PGA Yonah/ RC410MD(ME)/ SB450

2006-04-18 Rev. 1.0

Security Classification	Compal Secret Data		
Issued Date	2005/11/01	Deciphered Date	2006/11/01

THIS SHEET OF ENGINEERING DRAWING IS THE PROPRIETARY PROPERTY OF COMPAL ELECTRONICS, INC. AND CONTAINS CONFIDENTIAL AND TRADE SECRET INFORMATION. THIS SHEET MAY NOT BE TRANSFERED FROM THE CUSTODY OF THE COMPETENT DIVISION OF R&D DEPARTMENT EXCEPT AS AUTHORIZED BY COMPAL ELECTRONICS, INC. NEITHER THIS SHEET NOR THE INFORMATION IT CONTAINS MAY BE USED BY OR DISCLOSED TO ANY THIRD PARTY WITHOUT PRIOR WRITTEN CONSENT OF COMPAL ELECTRONICS, INC.

Compal Electronics, Inc.

Title	Black Diagram	
Size B	Document Number HTW2E(LA-3201P)	Rev 1.0
Date: Friday, April 21, 2006	Sheet 1 of 46	

HTW2E LA-3201P FUNCTION BLOCK DIAGRAM

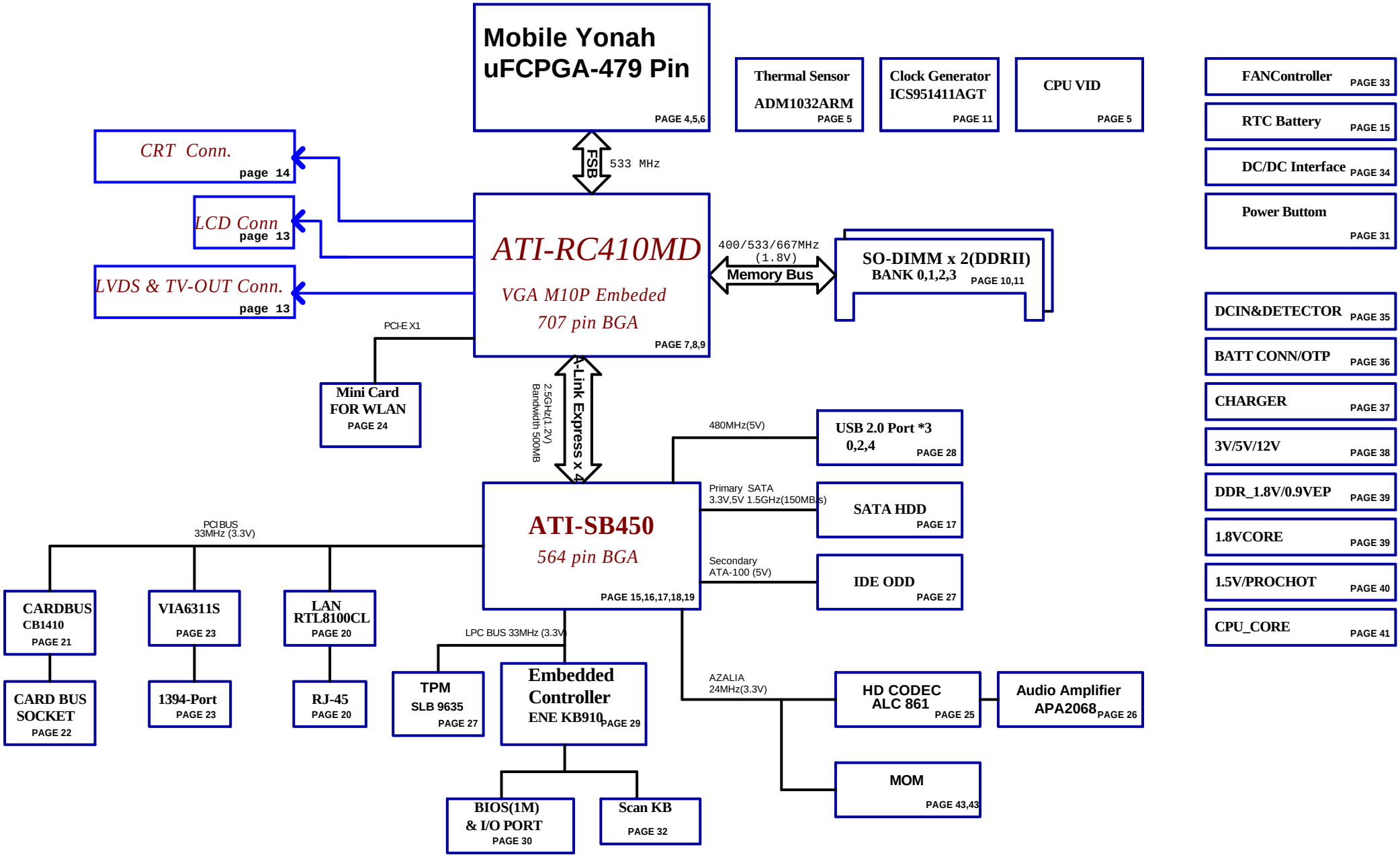

Security Classification	Compal Secret Data		
Issued Date	2005/11/01	Deciphered Date	2006/11/01

THIS SHEET OF ENGINEERING DRAWING IS THE PROPRIETARY PROPERTY OF COMPAL ELECTRONICS, INC. AND CONTAINS CONFIDENTIAL AND TRADE SECRET INFORMATION. THIS SHEET MAY NOT BE TRANSFERED FROM THE CUSTODY OF THE COMPETENT DIVISION OF R&D DEPARTMENT EXCEPT AS AUTHORIZED BY COMPAL ELECTRONICS, INC. NEITHER THIS SHEET NOR THE INFORMATION IT CONTAINS MAY BE USED BY OR DISCLOSED TO ANY THIRD PARTY WITHOUT PRIOR WRITTEN CONSENT OF COMPAL ELECTRONICS, INC.

Compal Electronics, Inc.

Title: Black Diagram

Size: Custom | Document Number: HTW2E(LA-3201P) | Rev: 1.0

Date: Friday, April 21, 2006 | Sheet 2 of 46

Voltage Rails

Power Plane	Description	S1	S3	S5
VIN	Adapter power supply (19V)	ON	ON	ON
B+	AC or battery power rail for power circuit.	ON	ON	ON
+CPU_CORE	Core voltage for CPU	ON	OFF	OFF
+CPUVID	1.2V switched power rail for CPU AGTL Bus	ON	OFF	OFF
+VGA_CORE	1.0V/1.2V switched power rail for VGA chip	ON	OFF	OFF
+1.2VS	1.2VS for PCI-Express	ON	OFF	OFF
+0.9VS	0.9V switched power rail	ON	OFF	OFF
+1.5VS	DOTHAN B	ON	OFF	OFF
+1.8VS	1.8VS switched power rail	ON	OFF	OFF
+1.8VALW	1.8V always on power rail	ON	ON	ON*
+1.8V	1.8V power rail	ON	ON	OFF
+3VALW	3.3V always on power rail	ON	ON	ON*
+3VS	3.3V switched power rail	ON	OFF	OFF
+5VALW	5V always on power rail	ON	ON	ON*
+5VS	5V switched power rail	ON	OFF	OFF
+12VALW	12V always on power rail	ON	ON	ON*
+RTCVCC	RTC power	ON	ON	ON

Note : ON* means that this power plane is ON only with AC power available, otherwise it is OFF.

External PCI Devices

Device	IDSEL#	REQ#/GNT#	Interrupts
TI 1410	AD20	2	PIRQB
LAN	AD22	1	PIRQG
1394	AD16	0	PIRQA

EC SM Bus1 address

Device	Address
Smart Battery	0001 011X b

EC SM Bus2 address

Device	Address
ADM1032	1001 110X b

SB450 SM Bus address

Device	Address	
Clock Generator (ICS951413BGLFT)	1101 001Xb	
DDR DIMM0	1010 0100b	A4
DDR DIMM1	1010 0110b	A6

STATE \ SIGNAL	SLP_S3#	SLP_S5#	+VALW	+V	+VS	Clock
Full ON	HIGH	HIGH	ON	ON	ON	ON
S1(Power On Suspend)	HIGH	HIGH	ON	ON	ON	LOW
S3 (Suspend to RAM)	LOW	HIGH	ON	ON	OFF	OFF
S4 (Suspend to Disk)	LOW	HIGH	ON	OFF	OFF	OFF
S5 (Soft OFF)	LOW	LOW	ON	OFF	OFF	OFF

Board ID Table for AD channel

Vcc	3.3V +/- 5%
Ra	100K +/- 5%

Board ID	Rb	V_{AD_BID} min	V_{AD_BID} typ	V_{AD_BID} max
0	0	0 V	0 V	0 V
1	8.2K +/- 5%	0.216 V	0.250 V	0.289 V
2	18K +/- 5%	0.436 V	0.503 V	0.538 V
3	33K +/- 5%	0.712 V	0.819 V	0.875 V
4	56K +/- 5%	1.036 V	1.185 V	1.264 V
5	100K +/- 5%	1.453 V	1.650 V	1.759 V
6	200K +/- 5%	1.935 V	2.200 V	2.341 V
7	NC	2.500 V	3.300 V	3.300 V

Board ID	PCB Revision
0	0.1
1	0.2
2	0.3
3	1.0
4	
5	
6	
7	

BTO	BOM STURCTURE
WIRELESS	WLAN@
1394	1394@

SKU ID	BTN_ID
0	1 Buttons
1	7 Buttons
2	
3	
4	
5	
6	
7	

	SKU_ID
0	WW
1	JP
2	
3	
4	
5	
6	
7	

Security Classification	Compal Secret Data		
Issued Date	2005/03/01	Deciphered Date	2006/03/01

THIS SHEET OF ENGINEERING DRAWING IS THE PROPRIETARY PROPERTY OF COMPAL ELECTRONICS, INC. AND CONTAINS CONFIDENTIAL AND TRADE SECRET INFORMATION. THIS SHEET MAY NOT BE TRANSFERED FROM THE CUSTODY OF THE COMPETENT DIVISION OF R&D DEPARTMENT EXCEPT AS AUTHORIZED BY COMPAL ELECTRONICS, INC. NEITHER THIS SHEET NOR THE INFORMATION IT CONTAINS MAY BE USED BY OR DISCLOSED TO ANY THIRD PARTY WITHOUT PRIOR WRITTEN CONSENT OF COMPAL ELECTRONICS, INC.

Compal Electronics, Inc.

Title	Notes List	
Size B	Document Number HTW2E(LA-3201P)	Rev 1.0
Date: Friday, April 21, 2006	Sheet 3 of 46	

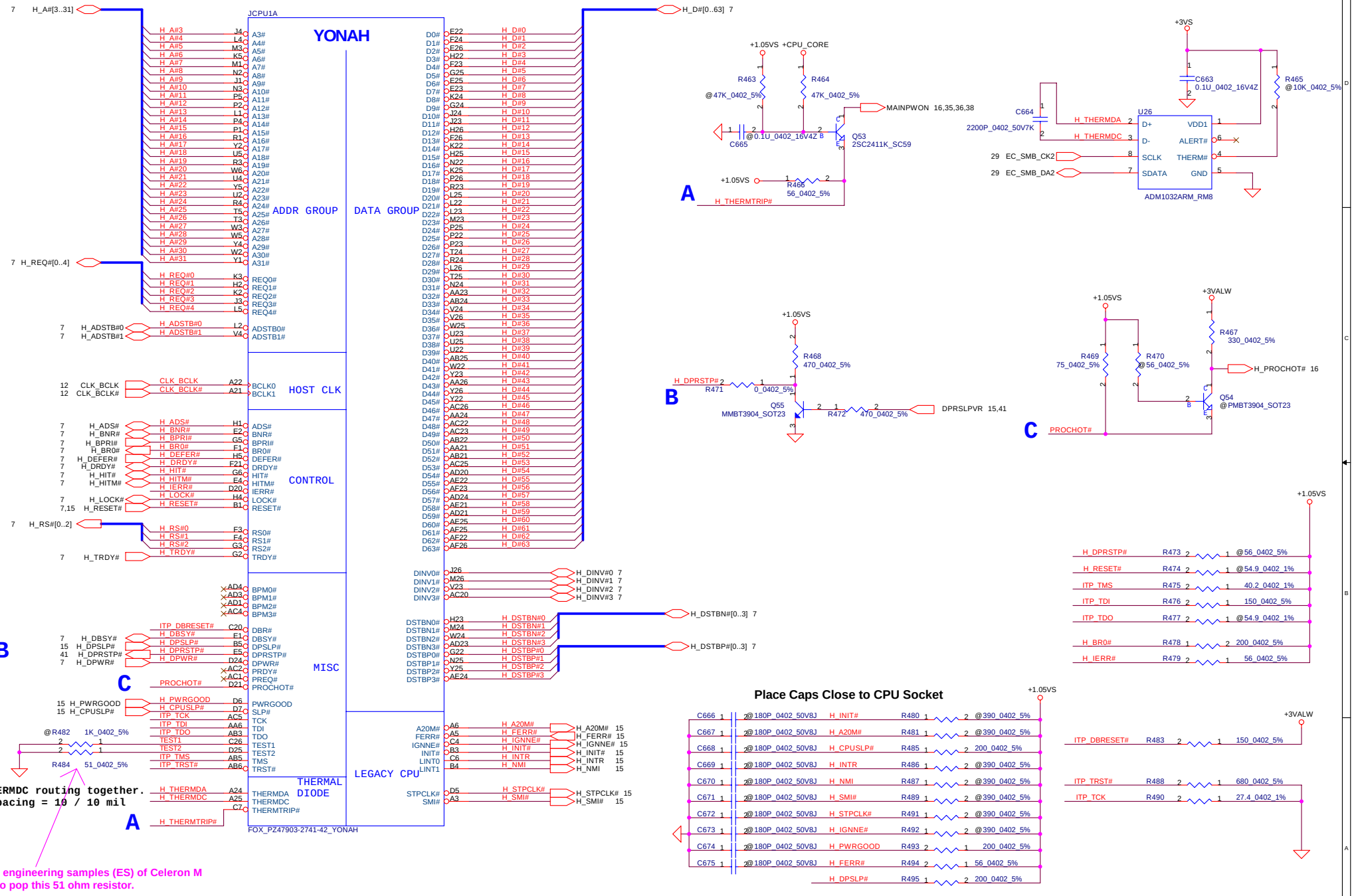

Security Classification	Compal Secret Data		
Issued Date	2005/11/1	Deciphered Date	2006/11/01

THIS SHEET OF ENGINEERING DRAWING IS THE PROPRIETARY PROPERTY OF COMPAL ELECTRONICS, INC. AND CONTAINS CONFIDENTIAL AND TRADE SECRET INFORMATION. THIS SHEET MAY NOT BE TRANSFERRED FROM THE CUSTODY OF THE COMPETENT DIVISION OF R&D DEPARTMENT EXCEPT AS AUTHORIZED BY COMPAL ELECTRONICS, INC. NEITHER THIS SHEET NOR THE INFORMATION IT CONTAINS MAY BE USED BY OR DISCLOSED TO ANY THIRD PARTY WITHOUT PRIOR WRITTEN CONSENT OF COMPAL ELECTRONICS, INC.

Compal Electronics, Inc.

Title: Yonah(1/2)-GTLITP

Size: Custom | Document Number: HTW2E(LA-3201P) | Rev: 1.0

Date: Friday, April 21, 2006 | Sheet 4 of 46

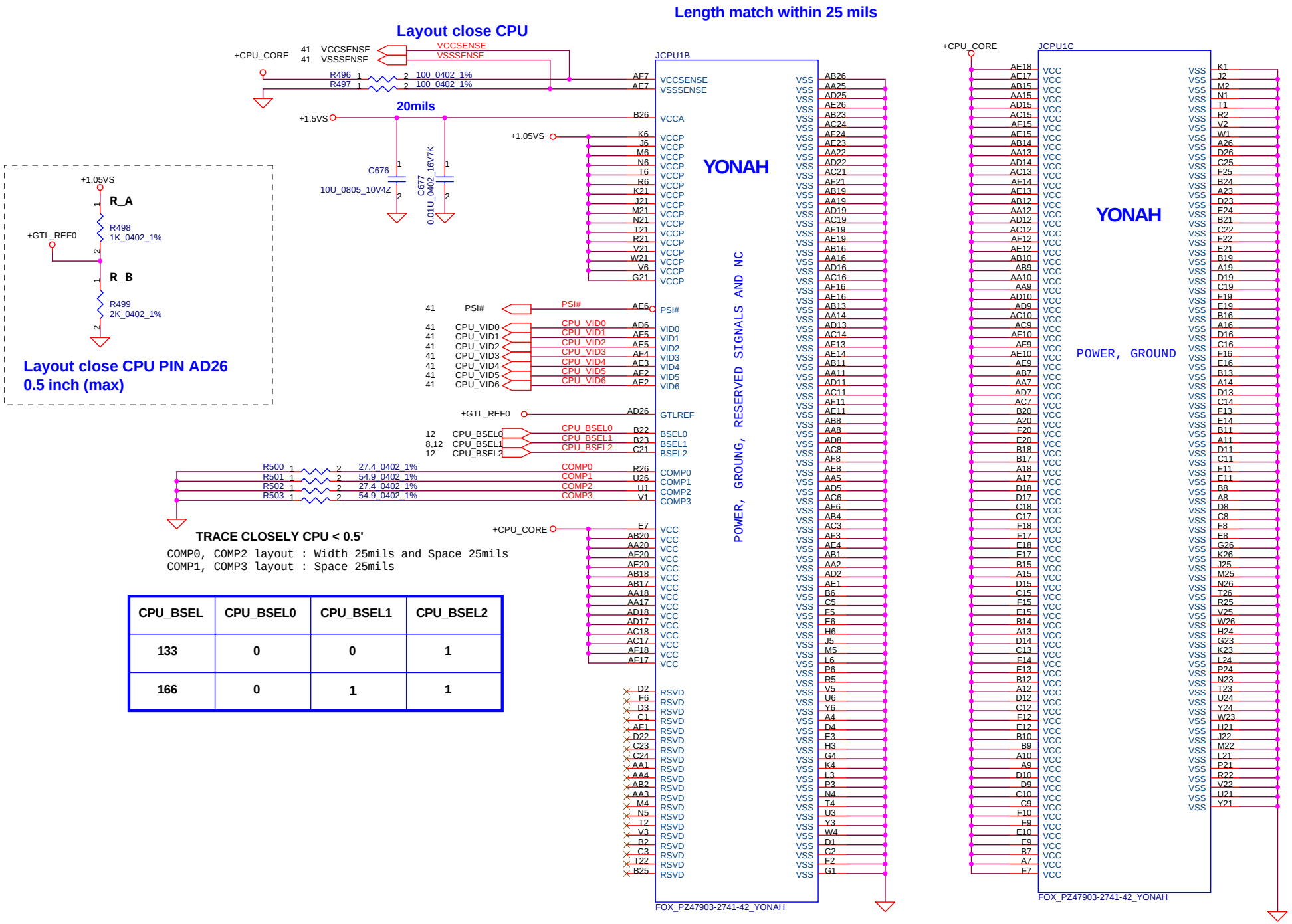

CPU_BSEL	CPU_BSEL0	CPU_BSEL1	CPU_BSEL2
133	0	0	1
166	0	1	1

Security Classification	Compal Secret Data		
Issued Date	2005/11/23	Deciphered Date	2006/11/22

THIS SHEET OF ENGINEERING DRAWING IS THE PROPRIETARY PROPERTY OF COMPAL ELECTRONICS, INC. AND CONTAINS CONFIDENTIAL AND TRADE SECRET INFORMATION. THIS SHEET MAY NOT BE TRANSFERED FROM THE CUSTODY OF THE COMPETENT DIVISION OF R&D DEPARTMENT EXCEPT AS AUTHORIZED BY COMPAL ELECTRONICS, INC. NEITHER THIS SHEET NOR THE INFORMATION IT CONTAINS MAY BE USED BY OR DISCLOSED TO ANY THIRD PARTY WITHOUT PRIOR WRITTEN CONSENT OF COMPAL ELECTRONICS, INC.

Compal Electronics, Inc.

Title: Yonah(2/2)-PWR/GND

Size: Custom | Document Number: HTW2E(LA-3201P) | Rev: 1.0

Date: Friday, April 21, 2006 | Sheet 5 of 46

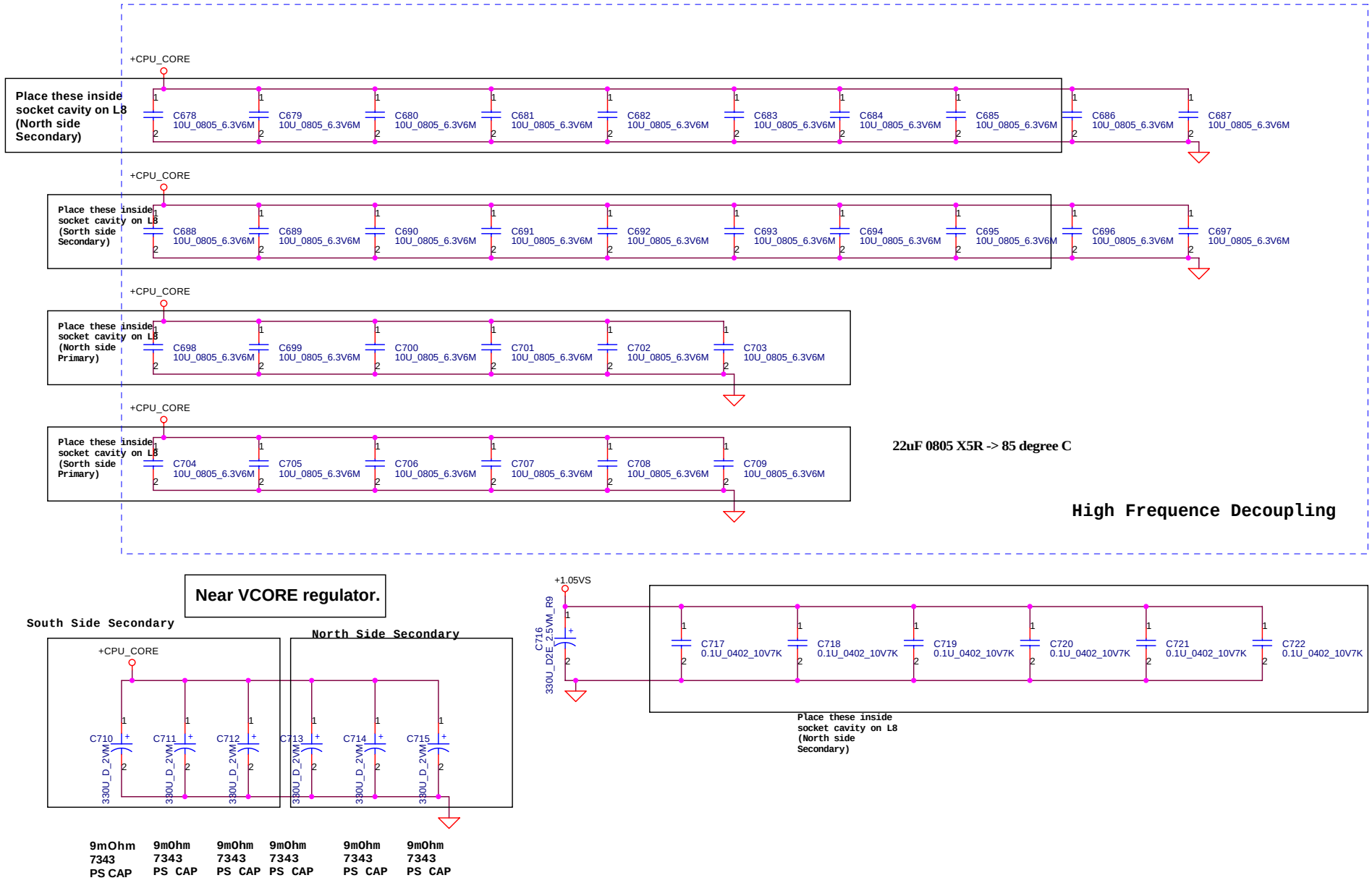

ESR <= 1.5m ohm
Capacitor > 1980uF

Security Classification	Compal Secret Data		
Issued Date	2005/11/23	Deciphered Date	2006/11/22

THIS SHEET OF ENGINEERING DRAWING IS THE PROPRIETARY PROPERTY OF COMPAL ELECTRONICS, INC. AND CONTAINS CONFIDENTIAL AND TRADE SECRET INFORMATION. THIS SHEET MAY NOT BE TRANSFERED FROM THE CUSTODY OF THE COMPETENT DIVISION OF R&D DEPARTMENT EXCEPT AS AUTHORIZED BY COMPAL ELECTRONICS, INC. NEITHER THIS SHEET NOR THE INFORMATION IT CONTAINS MAY BE USED BY OR DISCLOSED TO ANY THIRD PARTY WITHOUT PRIOR WRITTEN CONSENT OF COMPAL ELECTRONICS, INC.

Compal Electronics, Inc.

Title: Yonah Bypass

Size: B | Document Number: HTW2E(LA-3201P) | Rev: 1.0

Date: Wednesday, April 26, 2006 | Sheet 6 of 46

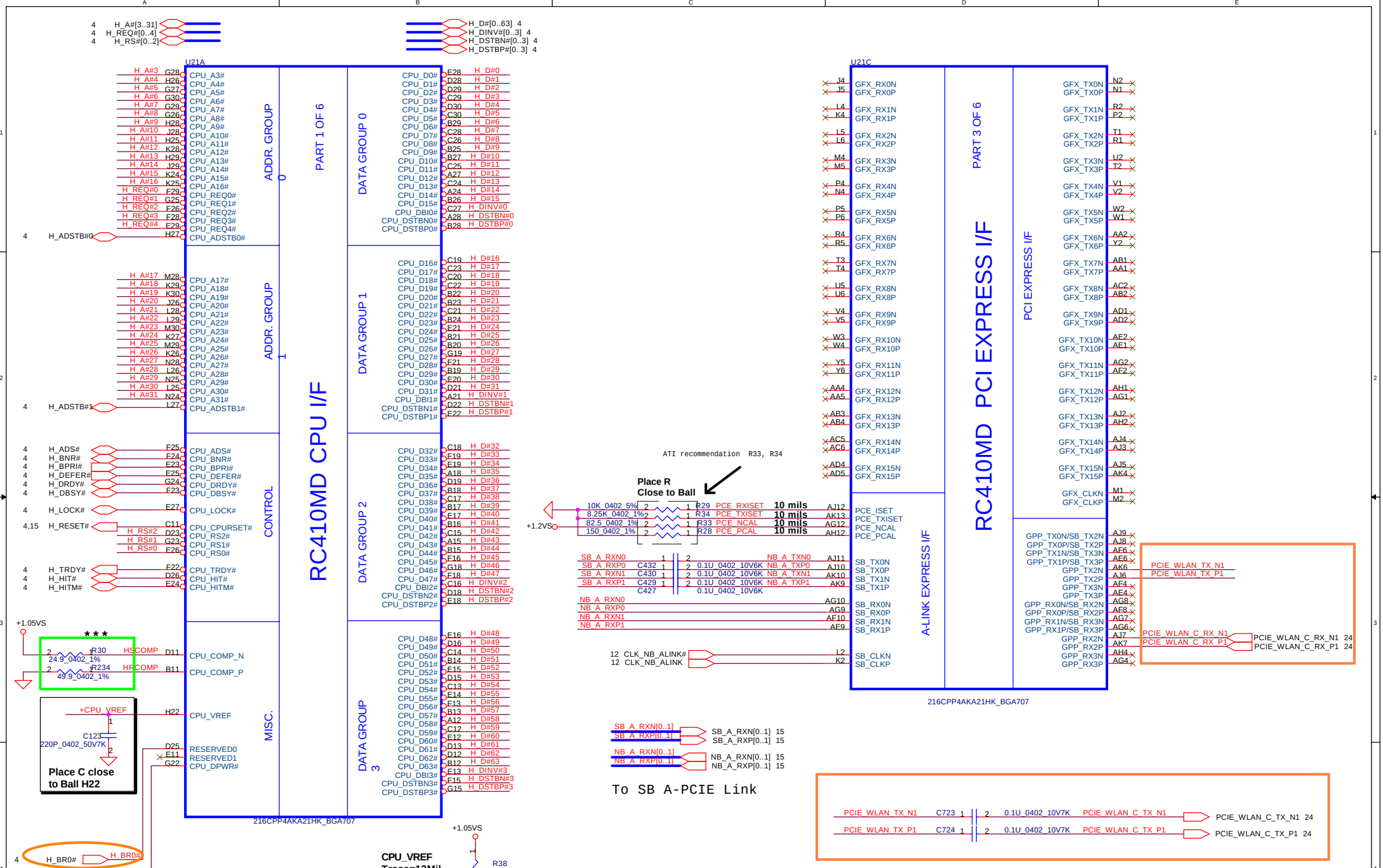

Security Classification	Compal Secret Data		
Issued Date	2005/11/01	Deciphered Date	2006/11/01

THIS SHEET OF ENGINEERING DRAWING IS THE PROPRIETARY PROPERTY OF COMPAL ELECTRONICS, INC. AND CONTAINS CONFIDENTIAL AND TRADE SECRET INFORMATION. THIS SHEET MAY NOT BE TRANSFERRED FROM THE CUSTODY OF THE COMPETENT DIVISION OF R&D DEPARTMENT EXCEPT AS AUTHORIZED BY COMPAL ELECTRONICS, INC. NEITHER THIS SHEET NOR THE INFORMATION IT CONTAINS MAY BE USED BY OR DISCLOSED TO ANY THIRD PARTY WITHOUT PRIOR WRITTEN CONSENT OF COMPAL ELECTRONICS, INC.

Compal Electronics, Inc.

Title: RC410MD-FSB, PCIE,A-PCIE

Size: B | Document Number: HTW2E(LA-3201P) | Rev: 1.0

Date: Friday, April 21, 2006 | Sheet 7 of 46

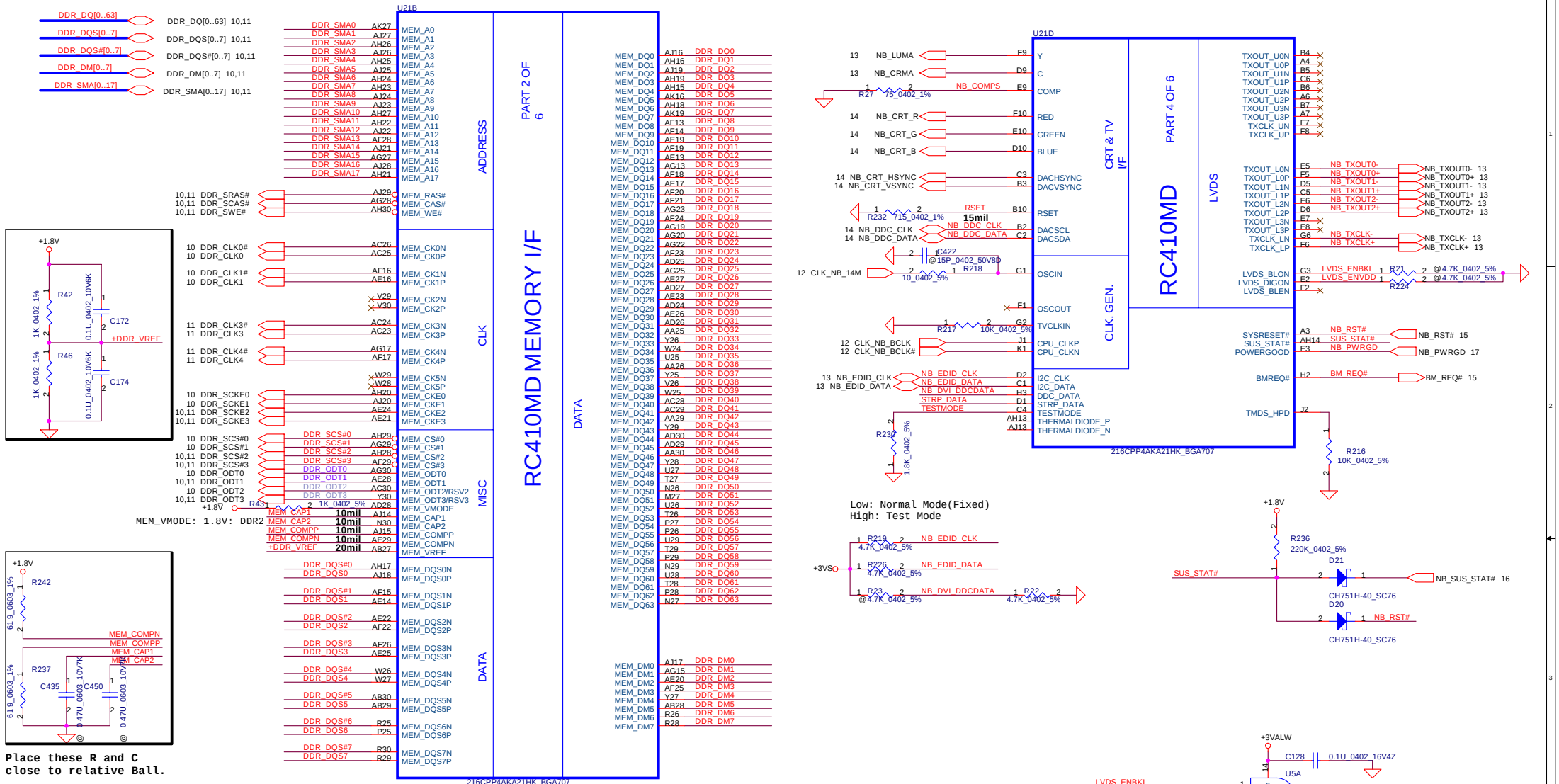

NB STRAPING PINS

FSB SPEED	BM_REQ#	NB_CRT_HSYNC	NB_CRT_VSYNC
166MHZ	0	1	1
133MHZ	0	0	1

Security Classification	Compal Secret Data		
Issued Date	2005/11/01	Deciphered Date	2006/11/01

THIS SHEET OF ENGINEERING DRAWING IS THE PROPRIETARY PROPERTY OF COMPAL ELECTRONICS, INC. AND CONTAINS CONFIDENTIAL AND TRADE SECRET INFORMATION. THIS SHEET MAY NOT BE TRANSFERRED FROM THE CUSTODY OF THE COMPETENT DIVISION OF R&D DEPARTMENT EXCEPT AS AUTHORIZED BY COMPAL ELECTRONICS, INC. NEITHER THIS SHEET NOR THE INFORMATION IT CONTAINS MAY BE USED BY OR DISCLOSED TO ANY THIRD PARTY WITHOUT PRIOR WRITTEN CONSENT OF COMPAL ELECTRONICS, INC.

Compal Electronics, Inc.

Title: RC410MD-DDR/DISP/MISC

Size: Custom | Document Number: HTW2E(LA-3201P) | Rev: 1.0

Date: Friday, April 21, 2006 | Sheet 8 of 46

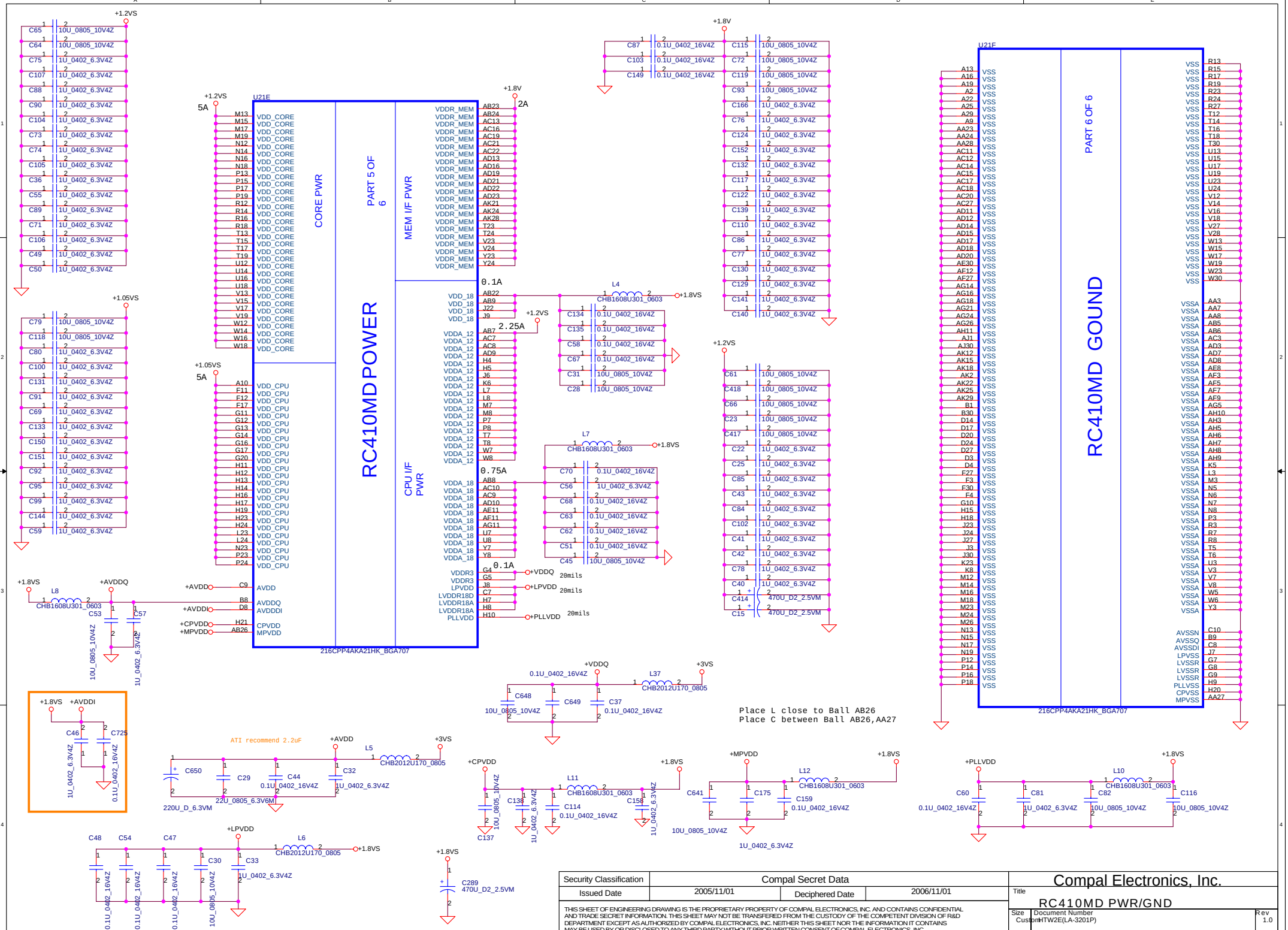

Security Classification	Compal Secret Data		
Issued Date	2005/11/01	Deciphered Date	2006/11/01

THIS SHEET OF ENGINEERING DRAWING IS THE PROPRIETARY PROPERTY OF COMPAL ELECTRONICS, INC. AND CONTAINS CONFIDENTIAL AND TRADE SECRET INFORMATION. THIS SHEET MAY NOT BE TRANSFERED FROM THE CUSTODY OF THE COMPETENT DIVISION OF R&D DEPARTMENT EXCEPT AS AUTHORIZED BY COMPAL ELECTRONICS, INC. NEITHER THIS SHEET NOR THE INFORMATION IT CONTAINS MAY BE USED BY OR DISCLOSED TO ANY THIRD PARTY WITHOUT PRIOR WRITTEN CONSENT OF COMPAL ELECTRONICS, INC.

Compal Electronics, Inc.

Title: RC410MD PWR/GND

Size: Custom | Document Number: HTW2E(LA-3201P) | Rev: 1.0

Date: Friday, April 21, 2006 | Sheet 9 of 46

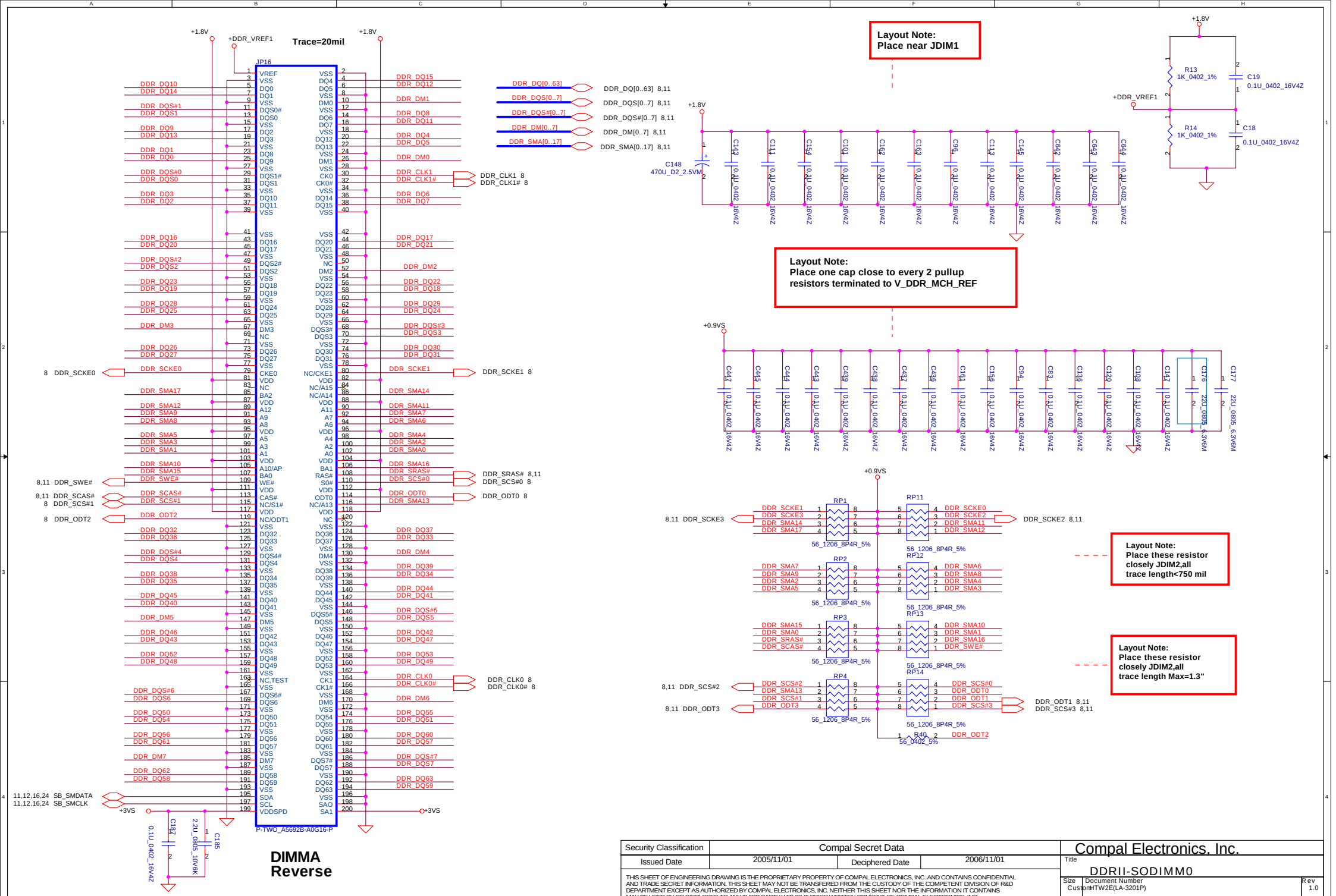

Security Classification	Compal Secret Data		
Issued Date	2005/11/01	Deciphered Date	2006/11/01

THIS SHEET OF ENGINEERING DRAWING IS THE PROPRIETARY PROPERTY OF COMPAL ELECTRONICS, INC. AND CONTAINS CONFIDENTIAL AND TRADE SECRET INFORMATION. THIS SHEET MAY NOT BE TRANSFERED FROM THE CUSTODY OF THE COMPETENT DIVISION OF R&D DEPARTMENT EXCEPT AS AUTHORIZED BY COMPAL ELECTRONICS, INC. NEITHER THIS SHEET NOR THE INFORMATION IT CONTAINS MAY BE USED BY OR DISCLOSED TO ANY THIRD PARTY WITHOUT PRIOR WRITTEN CONSENT OF COMPAL ELECTRONICS, INC.

Compal Electronics, Inc.

Title: DDRII-SODIMM0

Size: Custom | Document Number: HTW2E(LA-3201P) | Rev: 1.0

Date: Friday, April 21, 2006 | Sheet 10 of 46

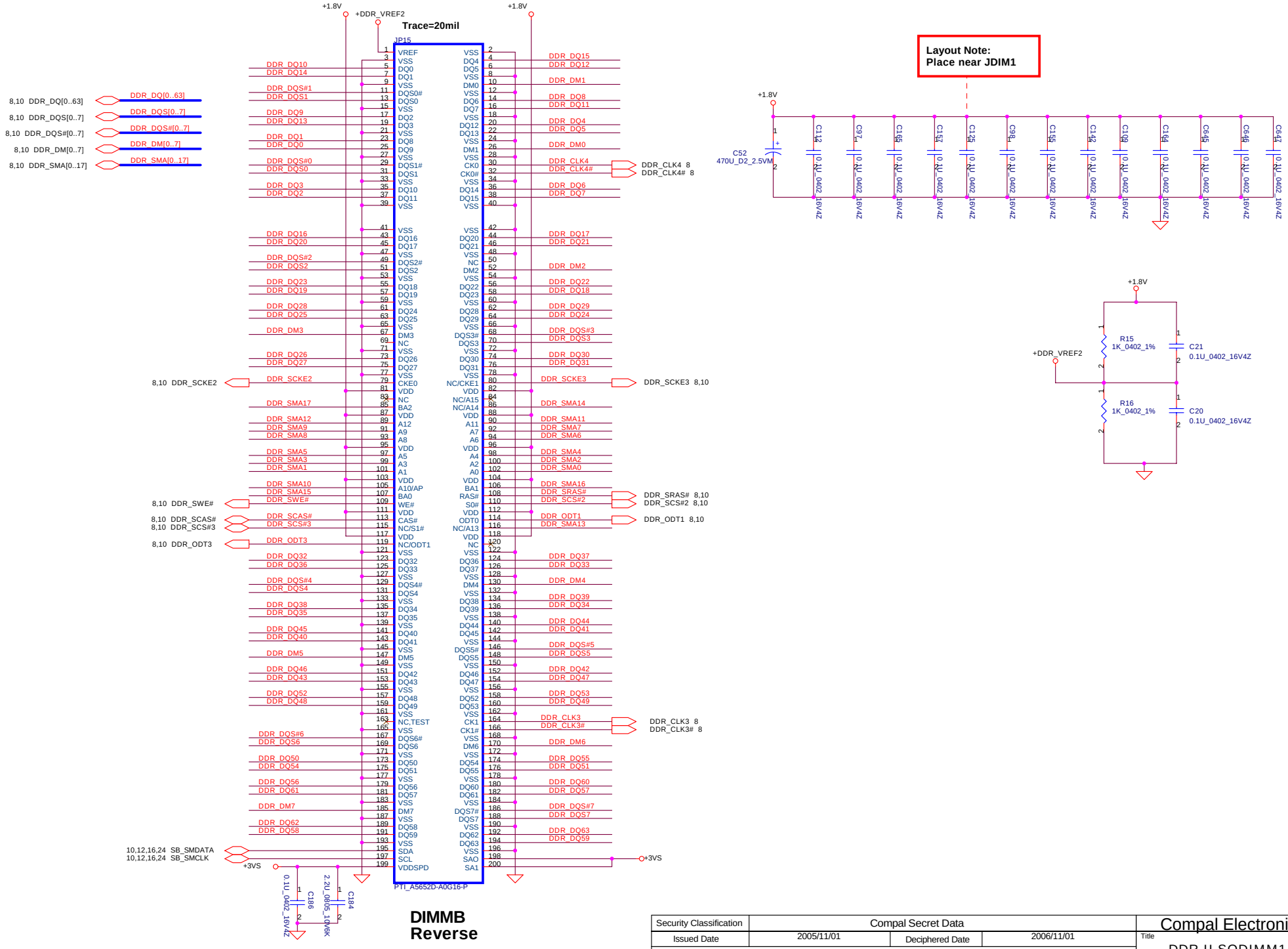

Security Classification	Compal Secret Data		
Issued Date	2005/11/01	Deciphered Date	2006/11/01

THIS SHEET OF ENGINEERING DRAWING IS THE PROPRIETARY PROPERTY OF COMPAL ELECTRONICS, INC. AND CONTAINS CONFIDENTIAL AND TRADE SECRET INFORMATION. THIS SHEET MAY NOT BE TRANSFERED FROM THE CUSTODY OF THE COMPETENT DIVISION OF R&D DEPARTMENT EXCEPT AS AUTHORIZED BY COMPAL ELECTRONICS, INC. NEITHER THIS SHEET NOR THE INFORMATION IT CONTAINS MAY BE USED BY OR DISCLOSED TO ANY THIRD PARTY WITHOUT PRIOR WRITTEN CONSENT OF COMPAL ELECTRONICS, INC.

Compal Electronics, Inc.

Title: DDR-II SODIMM1

Size: Custom | Document Number: HTW2E(LA-3201P) | Rev: 1.0

Date: Friday, April 21, 2006 | Sheet 11 of 46

Clock Generator

1- PLACE ALL THE SERIES TERMINATION RESISTORS AS CLOSE TO CLOCK GEN AS POSSIBLE

2- ROUTE ALL CPUCLK/#, NBCLK/#, ITPCLK/# AND SCR/# ,AS DIFFERENT PAIR RULE

3- PUT DECOUPLING CAPS CLOSE TO CLOCK GEN POWER PIN

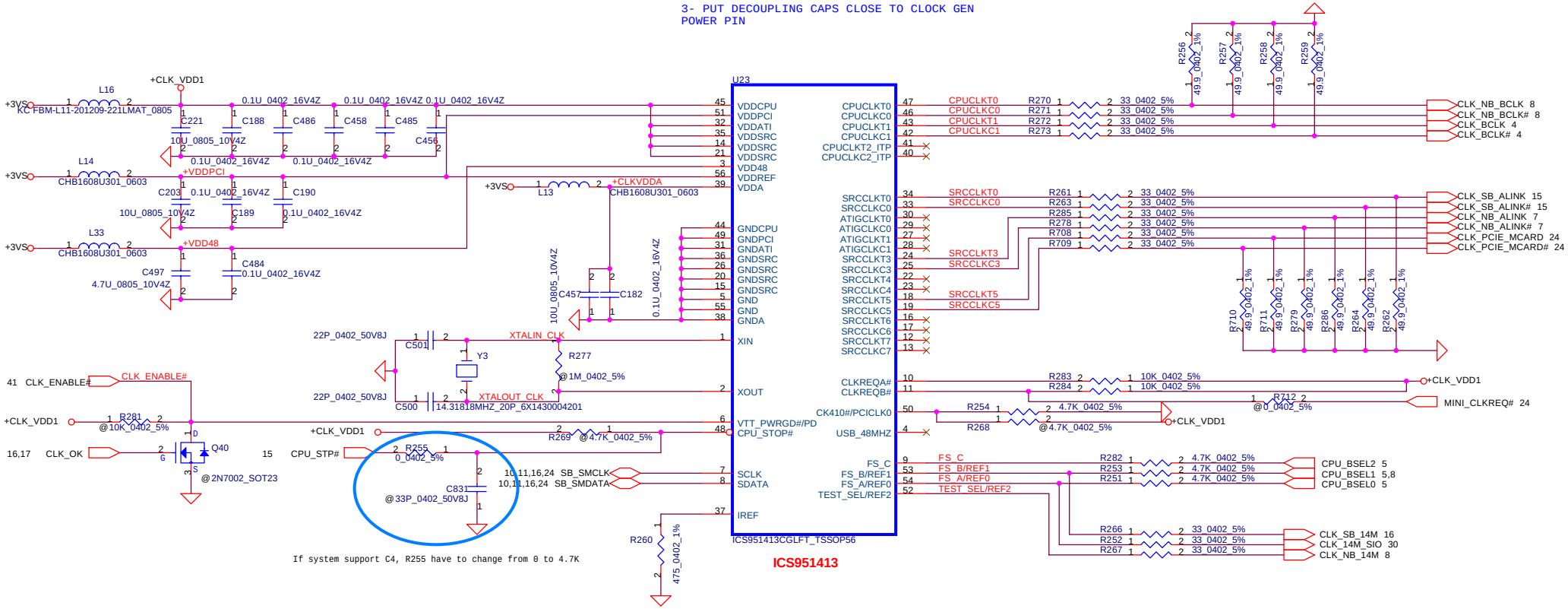

FS_C	FS_B	FS_A	CPU	SRC	PCI	REF	USB
1	0	1	100.00	100.00	33.33	14.318	48.000
0	0	1	133.33	100.00	33.33	14.318	48.000
0	1	1	166.66	100.00	33.33	14.318	48.000

Security Classification	Compal Secret Data		
Issued Date	2005/11/1	Deciphered Date	2006/11/01

THIS SHEET OF ENGINEERING DRAWING IS THE PROPRIETARY PROPERTY OF COMPAL ELECTRONICS, INC. AND CONTAINS CONFIDENTIAL AND TRADE SECRET INFORMATION. THIS SHEET MAY NOT BE TRANSFERRED FROM THE CUSTODY OF THE COMPETENT DIVISION OF R&D DEPARTMENT EXCEPT AS AUTHORIZED BY COMPAL ELECTRONICS, INC. NEITHER THIS SHEET NOR THE INFORMATION IT CONTAINS MAY BE USED BY OR DISCLOSED TO ANY THIRD PARTY WITHOUT PRIOR WRITTEN CONSENT OF COMPAL ELECTRONICS, INC.

Compal Electronics, Inc.

Title: ClockGen ICS 951411

Size: B | Document Number: HTW2E(LA-3201P) | Rev: 1.0

Date: Friday, April 21, 2006 | Sheet 12 of 46

TV-OUT CONNECTOR

Reduce LUMA_1 and CRMA_1 length
As short as possible

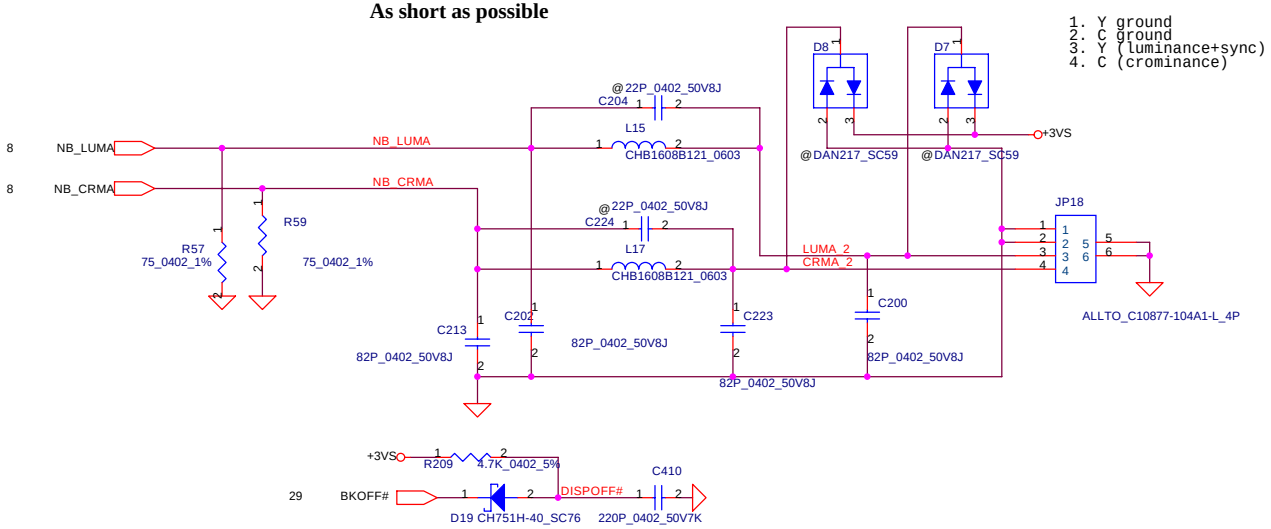

PANEL +LCDVDD CTRL CKT

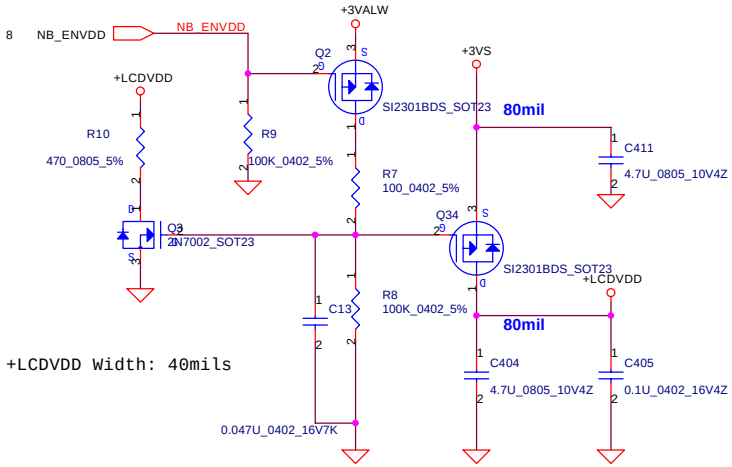

+LCDVDD Width: 40mils

LCD/PANEL BD. Conn.

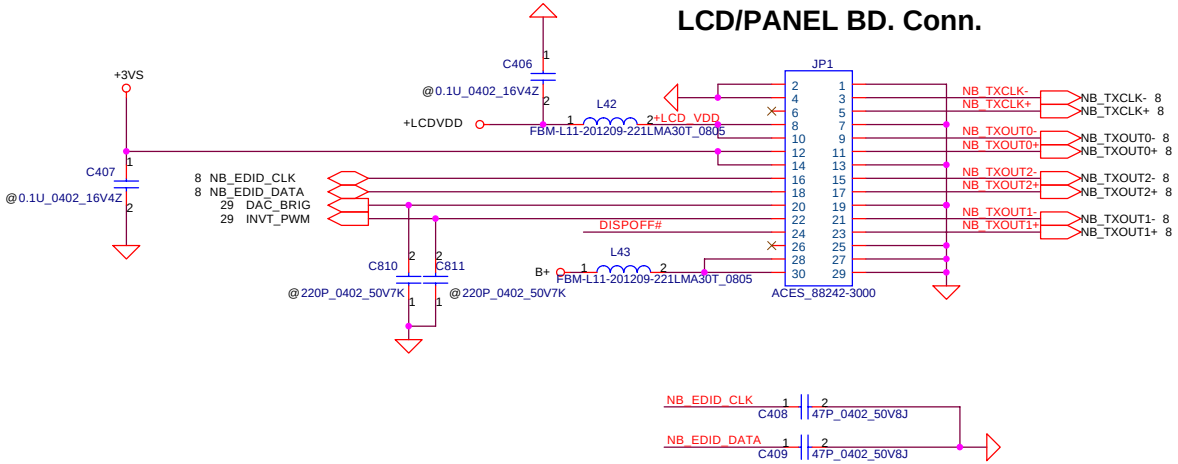

Security Classification	Compal Secret Data		
Issued Date	2005/11/01	Deciphered Date	2006/11/01

THIS SHEET OF ENGINEERING DRAWING IS THE PROPRIETARY PROPERTY OF COMPAL ELECTRONICS, INC. AND CONTAINS CONFIDENTIAL AND TRADE SECRET INFORMATION. THIS SHEET MAY NOT BE TRANSFERED FROM THE CUSTODY OF THE COMPETENT DIVISION OF R&D DEPARTMENT EXCEPT AS AUTHORIZED BY COMPAL ELECTRONICS, INC. NEITHER THIS SHEET NOR THE INFORMATION IT CONTAINS MAY BE USED BY OR DISCLOSED TO ANY THIRD PARTY WITHOUT PRIOR WRITTEN CONSENT OF COMPAL ELECTRONICS, INC.

Compal Electronics, Inc.

Title: TV-OUT, LVDS CONNECTOR

Size: B | Document Number: HTW2E(LA-3201P) | Rev: 1.0

Date: Friday, April 21, 2006 | Sheet 13 of 46

CRT CONNECTOR

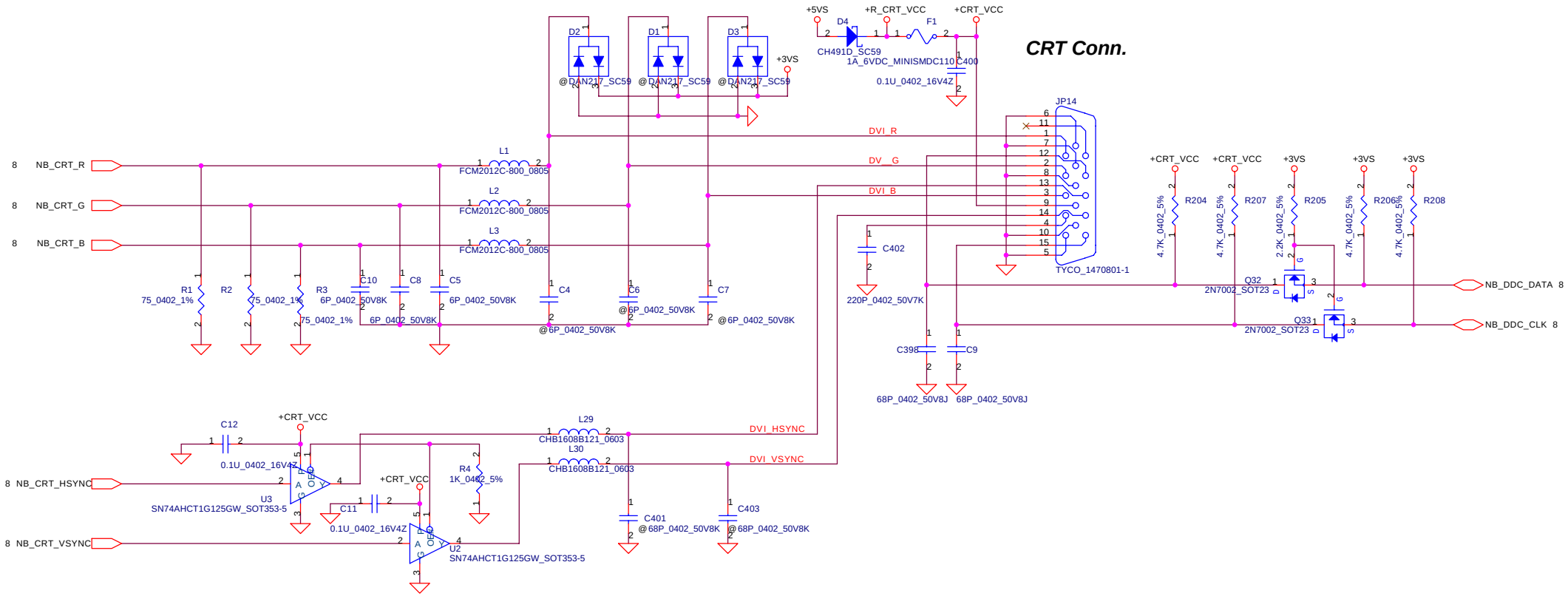

Security Classification	Compal Secret Data		
Issued Date	2005/11/01	Deciphered Date	2006/11/01

THIS SHEET OF ENGINEERING DRAWING IS THE PROPRIETARY PROPERTY OF COMPAL ELECTRONICS, INC. AND CONTAINS CONFIDENTIAL AND TRADE SECRET INFORMATION. THIS SHEET MAY NOT BE TRANSFERED FROM THE CUSTODY OF THE COMPETENT DIVISION OF R&D DEPARTMENT EXCEPT AS AUTHORIZED BY COMPAL ELECTRONICS, INC. NEITHER THIS SHEET NOR THE INFORMATION IT CONTAINS MAY BE USED BY OR DISCLOSED TO ANY THIRD PARTY WITHOUT PRIOR WRITTEN CONSENT OF COMPAL ELECTRONICS, INC.

Compal Electronics, Inc.

Title: CRT CONNECTOR

Size: B | Document Number: HTW2E(LA-3201P) | Rev: 1.0

Date: Wednesday, April 26, 2006 | Sheet 14 of 46

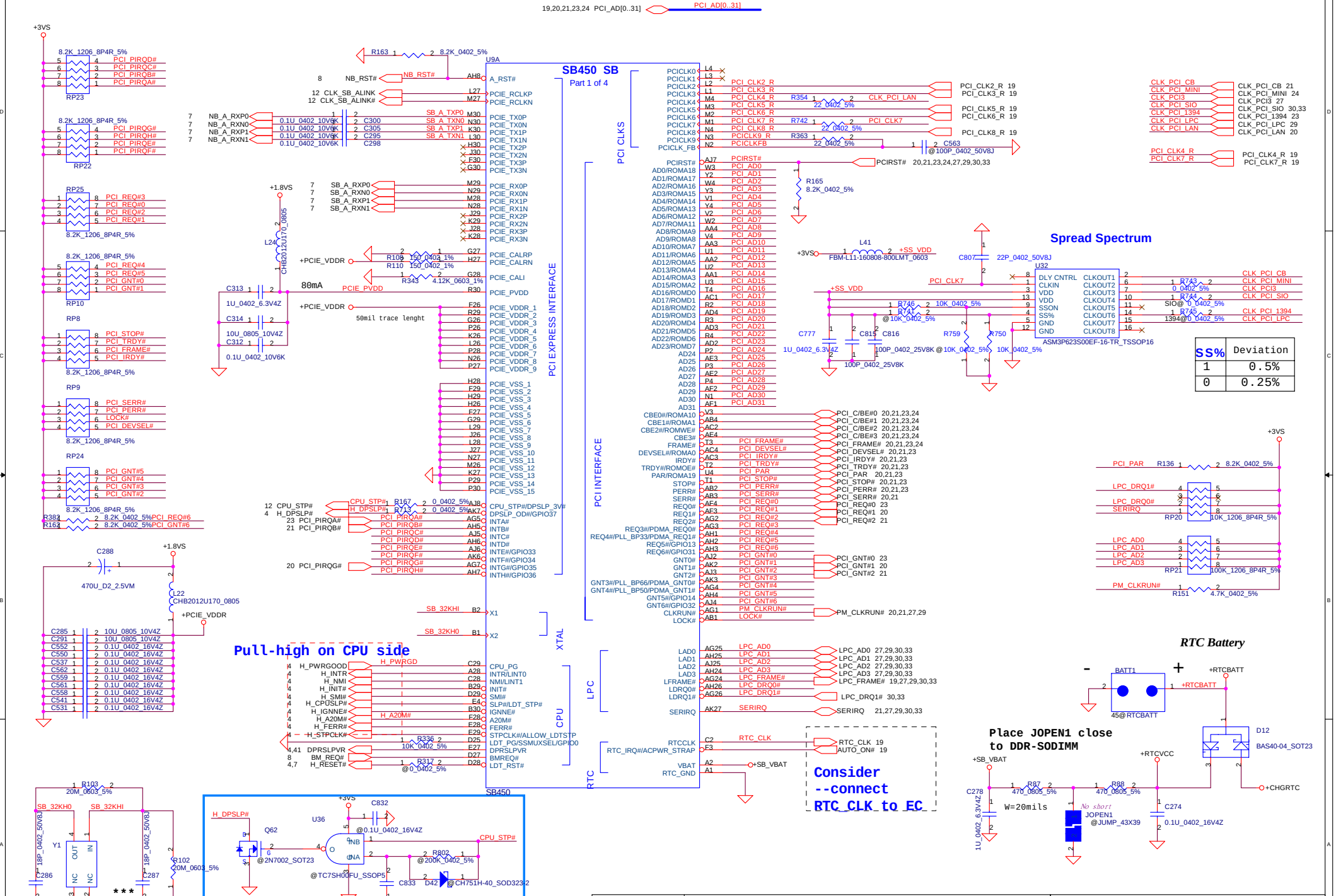

Security Classification	Compal Secret Data		
Issued Date	2005/11/01	Deciphered Date	2006/11/01

THIS SHEET OF ENGINEERING DRAWING IS THE PROPRIETARY PROPERTY OF COMPAL ELECTRONICS, INC. AND CONTAINS CONFIDENTIAL AND TRADE SECRET INFORMATION. THIS SHEET MAY NOT BE TRANSFERED FROM THE CUSTODY OF THE COMPETENT DIVISION OF R&D DEPARTMENT EXCEPT AS AUTHORIZED BY COMPAL ELECTRONICS, INC. NEITHER THIS SHEET NOR THE INFORMATION IT CONTAINS MAY BE USED BY OR DISCLOSED TO ANY THIRD PARTY WITHOUT PRIOR WRITTEN CONSENT OF COMPAL ELECTRONICS, INC.

Compal Electronics, Inc.

Title: PCI EXP/LPC/RTC

Size: | Document Number: HTW2E(LA-3201P) | Rev: 1.0

Date: Friday, May 05, 2006 | Sheet 15 of 46

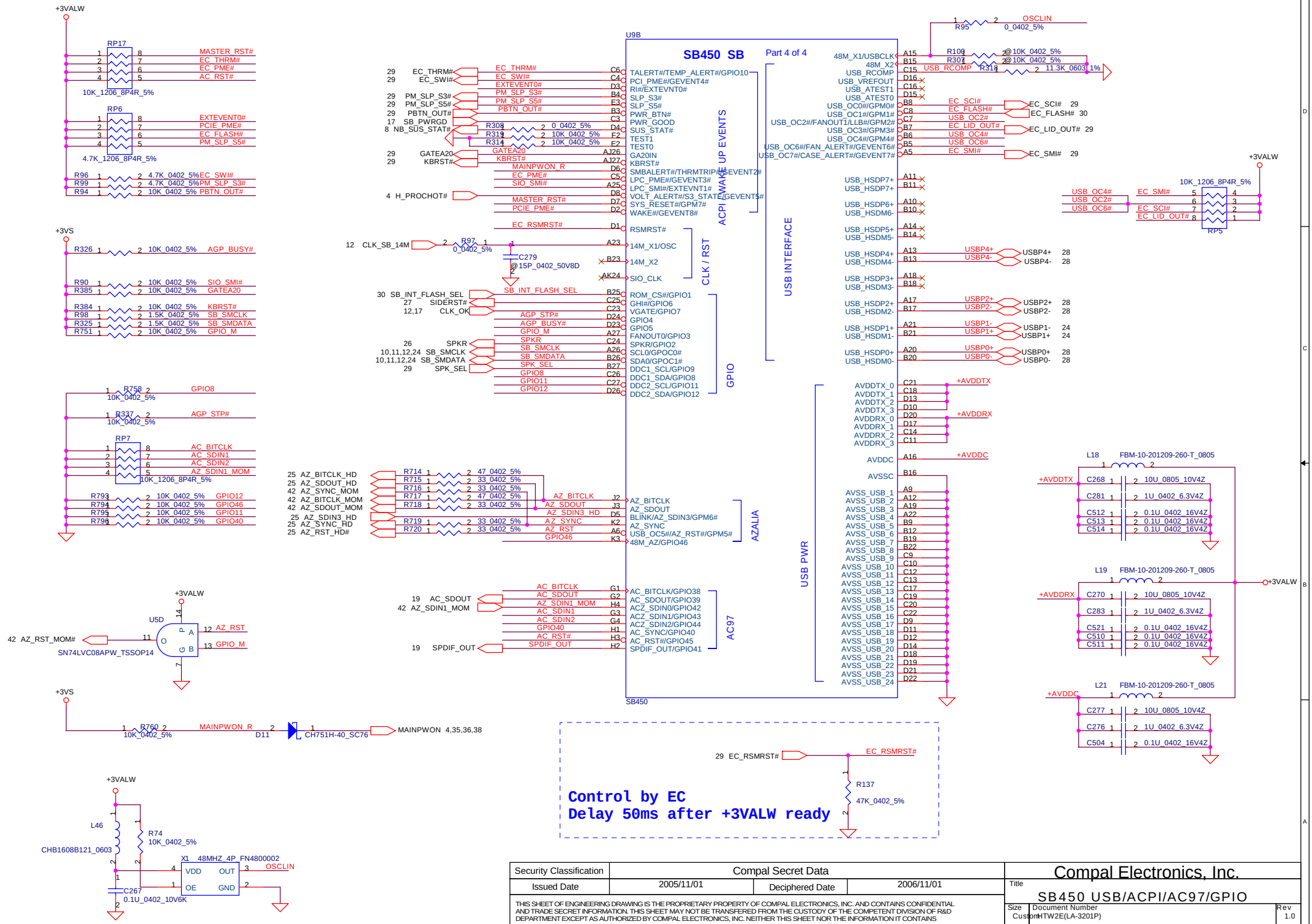

Security Classification	Compal Secret Data		
Issued Date	2005/11/01	Deciphered Date	2006/11/01

THIS SHEET OF ENGINEERING DRAWING IS THE PROPRIETARY PROPERTY OF COMPAL ELECTRONICS, INC. AND CONTAINS CONFIDENTIAL AND TRADE SECRET INFORMATION. THIS SHEET MAY NOT BE TRANSFERED FROM THE CUSTODY OF THE COMPETENT DIVISION OF R&D DEPARTMENT EXCEPT AS AUTHORIZED BY COMPAL ELECTRONICS, INC. NEITHER THIS SHEET NOR THE INFORMATION IT CONTAINS MAY BE USED BY OR DISCLOSED TO ANY THIRD PARTY WITHOUT PRIOR WRITTEN CONSENT OF COMPAL ELECTRONICS, INC.

Compal Electronics, Inc.

Title: SB450 USB/ACPI/AC97/GPIO

Size: Custom | Document Number: HTW2E(LA-3201P) | Rev: 1.0

Date: Friday, April 28, 2006 | Sheet 16 of 46

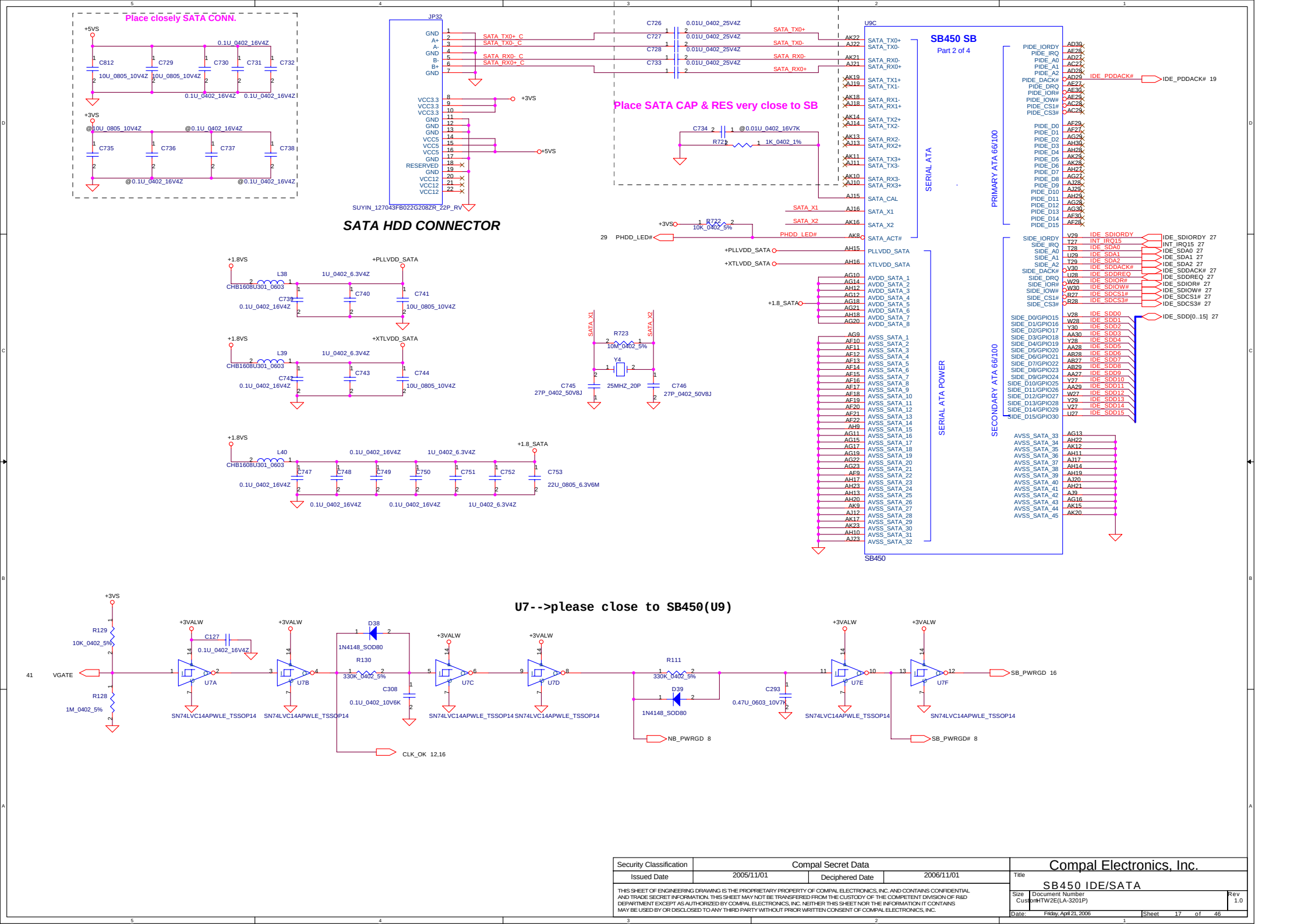

Security Classification	Compal Secret Data		
Issued Date	2005/11/01	Deciphered Date	2006/11/01

THIS SHEET OF ENGINEERING DRAWING IS THE PROPRIETARY PROPERTY OF COMPAL ELECTRONICS, INC. AND CONTAINS CONFIDENTIAL AND TRADE SECRET INFORMATION. THIS SHEET MAY NOT BE TRANSFERED FROM THE CUSTODY OF THE COMPETENT DIVISION OF R&D DEPARTMENT EXCEPT AS AUTHORIZED BY COMPAL ELECTRONICS, INC. NEITHER THIS SHEET NOR THE INFORMATION IT CONTAINS MAY BE USED BY OR DISCLOSED TO ANY THIRD PARTY WITHOUT PRIOR WRITTEN CONSENT OF COMPAL ELECTRONICS, INC.

Compal Electronics, Inc.

Title: SB450 IDE/SATA

Size	Document Number	Rev
Custom	HTW2E(LA-3201P)	1.0

Date: Friday, April 21, 2006 | Sheet 17 of 46

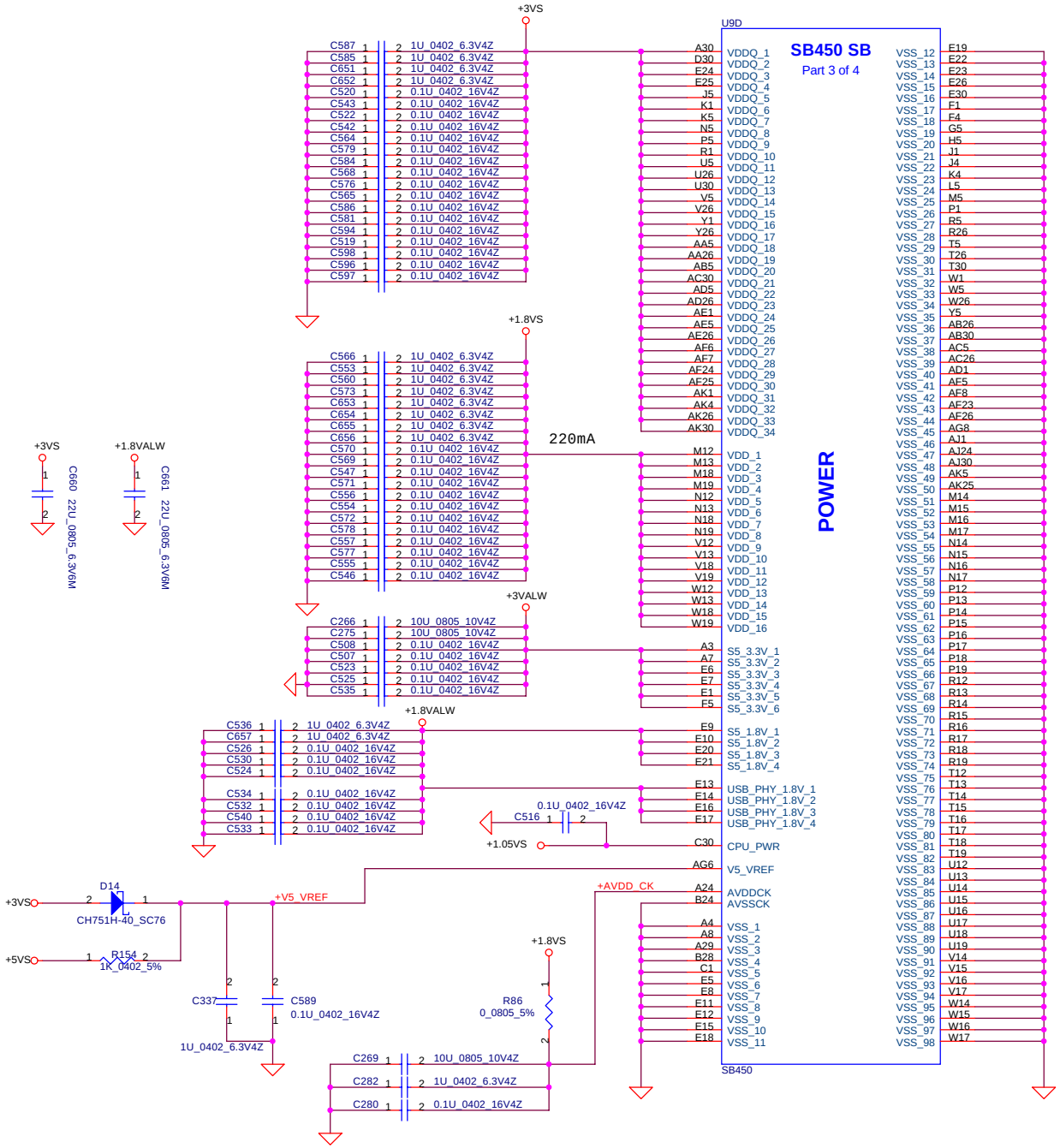

Security Classification	Compal Secret Data		
Issued Date	2005/11/01	Deciphered Date	2006/11/01

THIS SHEET OF ENGINEERING DRAWING IS THE PROPRIETARY PROPERTY OF COMPAL ELECTRONICS, INC. AND CONTAINS CONFIDENTIAL AND TRADE SECRET INFORMATION. THIS SHEET MAY NOT BE TRANSFERED FROM THE CUSTODY OF THE COMPETENT DIVISION OF R&D DEPARTMENT EXCEPT AS AUTHORIZED BY COMPAL ELECTRONICS, INC. NEITHER THIS SHEET NOR THE INFORMATION IT CONTAINS MAY BE USED BY OR DISCLOSED TO ANY THIRD PARTY WITHOUT PRIOR WRITTEN CONSENT OF COMPAL ELECTRONICS, INC.

Compal Electronics, Inc.

Title: SB450/POWER/GND

Size: B | Document Number: HTW2E(LA-3201P) | Rev: 1.0

Date: Friday, April 21, 2006 | Sheet 18 of 46

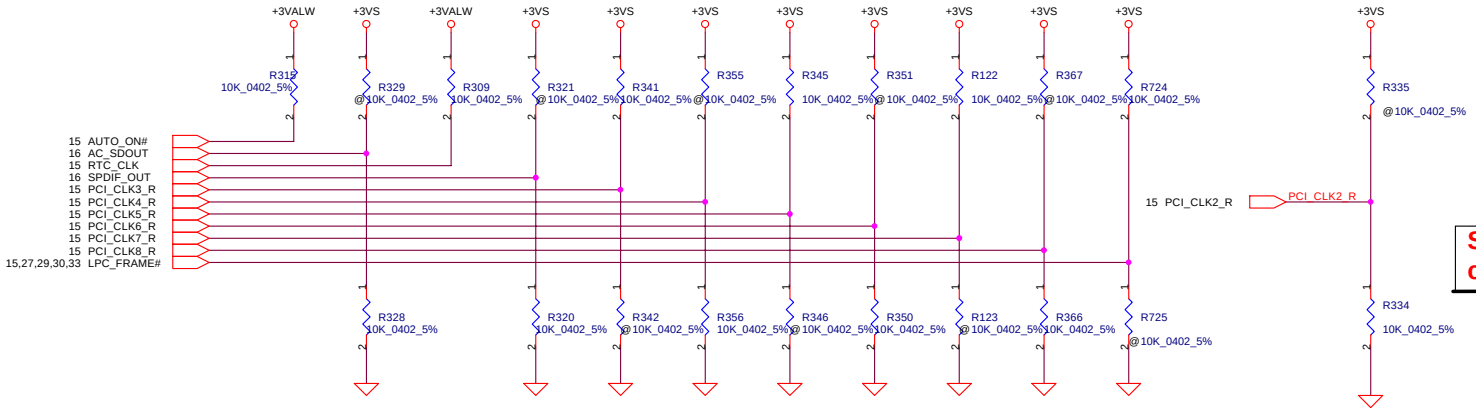

Selects type of 48MHz clock pad

ACPWRON

REQUIRED STRAPS

	AUTO_ON#	AC97_SDOUT	RTC_CLK	SPDIF_OUT	CLK_PCI3	CLK_PCI_LAN	CLK_PCI_LPC	PCI_CLK6	PCI_CLK7 PCI_CLK8	PCI_CLK2_R	LFRAME#
PULL HIGH	MANUAL PWR ON DEFAULT	USE DEBUG STRAPS	INTERNAL RTC DEFAULT	SIO 24MHz	USB PHY PWRDOWN DISABLE	Internal PLL	PCIE CM_SET low DEFAULT	CPU I/F = K8	ROM TYPE H,H = PCI ROM H,L = LPC ROM I L,H = LPC ROM II L,L = FWH ROM	Crytsal Pad	THERMTIP# ENABLE
PULL LOW	AUTO PWR ON	IGNORE DEBUG STRAPS DEFAULT	EXTERNAL RTC (NOT SUPPORTED W/ IT8712)	SIO 48MHZ DEFAULT	USB PHY PWRDOWN ENABLE DEFAULT	External Clock DEFAULT	PCIE CM_SET HIGH	CPU I/F = P4 DEFAULT		Clock input buffer DEFAULT	THERMTIP# DISENABLE

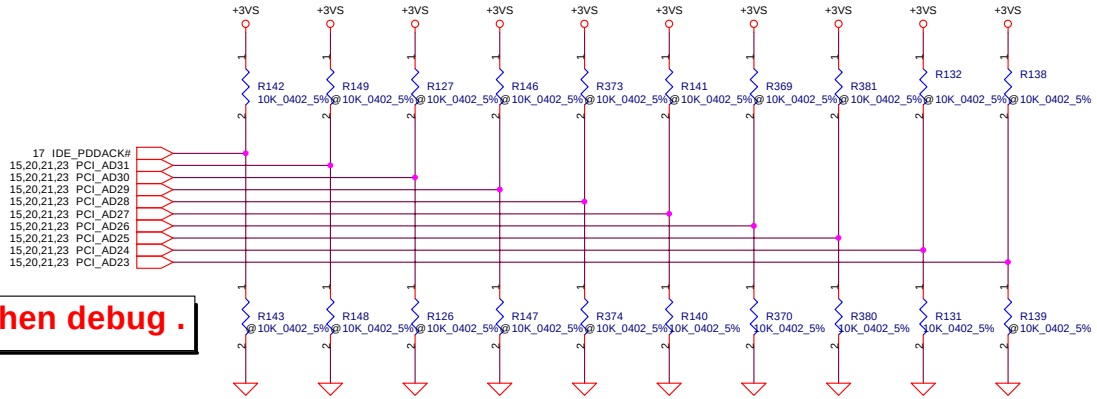

Pop R634 when debug .

DEBUG STRAPS

	IDE_PDDACK#	PCI_AD31	PCI_AD30	PCI_AD29	PCI_AD28	PCI_AD27	PCI_AD26	PCI_AD25	PCI_AD24	PCI_AD23
PULL HIGH	USE LONG RESET DEFAULT	Reserved	Reserved	Reserved	Reserved	BYPASS PCI PLL	BYPASS ACPI BCLK	BYPASS IDE PLL	USE EEPROM PCIE STRAPS	Reserved
PULL LOW	USE SHORT RESET					USE PCI PLL DEFAULT	USE ACPI BCLK DEFAULT	USE IDE PLL DEFAULT	USE DEFAULT PCIE STRAPS DEFAULT	

Security Classification	Compal Secret Data		
Issued Date	2005/11/01	Deciphered Date	2006/11/01

THIS SHEET OF ENGINEERING DRAWING IS THE PROPRIETARY PROPERTY OF COMPAL ELECTRONICS, INC. AND CONTAINS CONFIDENTIAL AND TRADE SECRET INFORMATION. THIS SHEET MAY NOT BE TRANSFERED FROM THE CUSTODY OF THE COMPETENT DIVISION OF R&D DEPARTMENT EXCEPT AS AUTHORIZED BY COMPAL ELECTRONICS, INC. NEITHER THIS SHEET NOR THE INFORMATION IT CONTAINS MAY BE USED BY OR DISCLOSED TO ANY THIRD PARTY WITHOUT PRIOR WRITTEN CONSENT OF COMPAL ELECTRONICS, INC.

Compal Electronics, Inc.

Title: HARDWARE TRAP

Size: Custom | Document Number: HTW2E(LA-3201P) | Rev: 1.0

Date: Friday, April 21, 2006 | Sheet 19 of 46

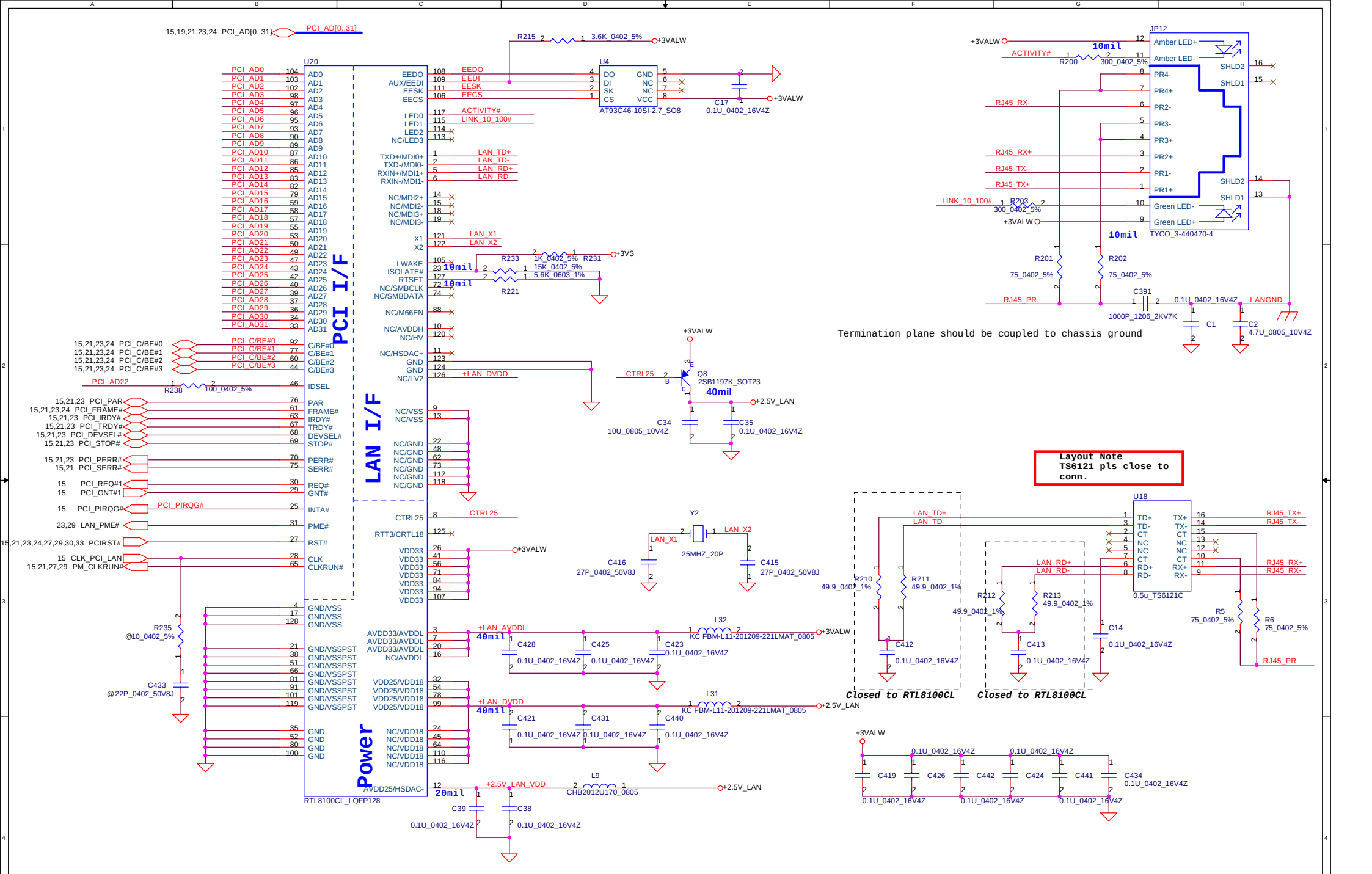

Security Classification	Compal Secret Data		
Issued Date	2005/11/01	Deciphered Date	2006/11/01

THIS SHEET OF ENGINEERING DRAWING IS THE PROPRIETARY PROPERTY OF COMPAL ELECTRONICS, INC. AND CONTAINS CONFIDENTIAL AND TRADE SECRET INFORMATION. THIS SHEET MAY NOT BE TRANSFERED FROM THE CUSTODY OF THE COMPETENT DIVISION OF R&D DEPARTMENT EXCEPT AS AUTHORIZED BY COMPAL ELECTRONICS, INC. NEITHER THIS SHEET NOR THE INFORMATION IT CONTAINS MAY BE USED BY OR DISCLOSED TO ANY THIRD PARTY WITHOUT PRIOR WRITTEN CONSENT OF COMPAL ELECTRONICS, INC.

Compal Electronics, Inc.

Title: RTL8100CL

Size: B | Document Number: HTW2E(LA-3201P) | Rev: 1.0

Date: Friday, April 21, 2006 | Sheet 20 of 46

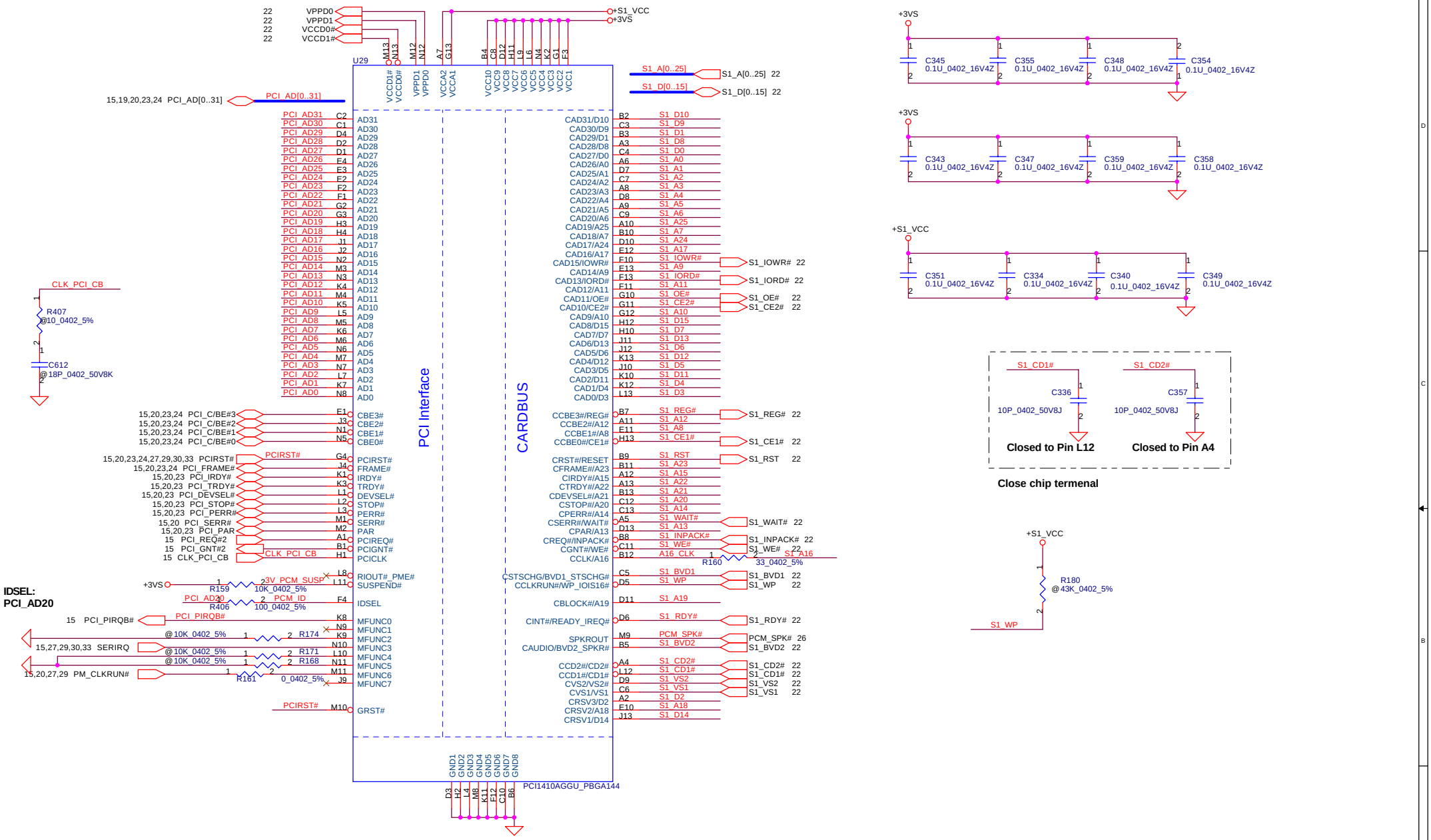

Security Classification	Compal Secret Data		
Issued Date	2005/11/01	Deciphered Date	2006/11/01

THIS SHEET OF ENGINEERING DRAWING IS THE PROPRIETARY PROPERTY OF COMPAL ELECTRONICS, INC. AND CONTAINS CONFIDENTIAL AND TRADE SECRET INFORMATION. THIS SHEET MAY NOT BE TRANSFERED FROM THE CUSTODY OF THE COMPETENT DIVISION OF R&D DEPARTMENT EXCEPT AS AUTHORIZED BY COMPAL ELECTRONICS, INC. NEITHER THIS SHEET NOR THE INFORMATION IT CONTAINS MAY BE USED BY OR DISCLOSED TO ANY THIRD PARTY WITHOUT PRIOR WRITTEN CONSENT OF COMPAL ELECTRONICS, INC.

Compal Electronics, Inc.

Title: ENE-CB1410

Size: B | Document Number: HTW2E(LA-3201P) | Rev: 1.0

Date: Friday, April 21, 2006 | Sheet 21 of 46

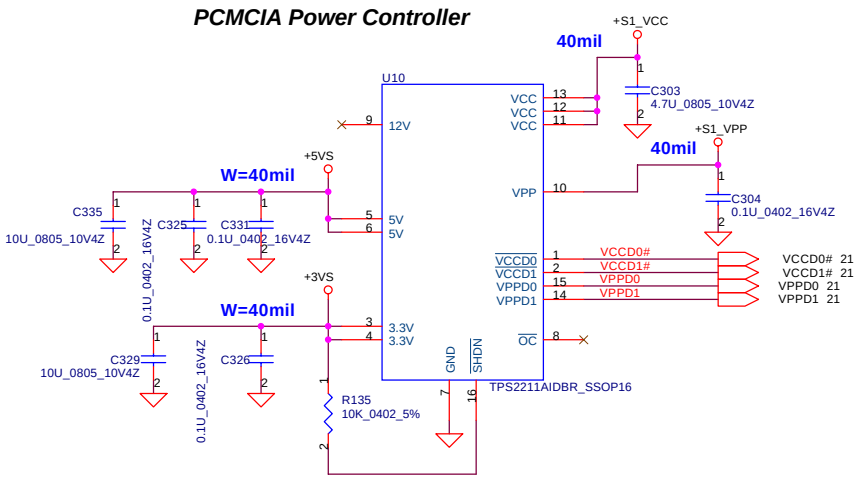

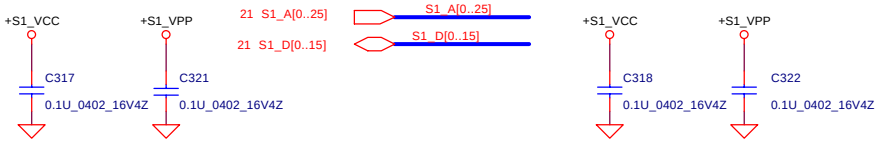

CardBus Socket

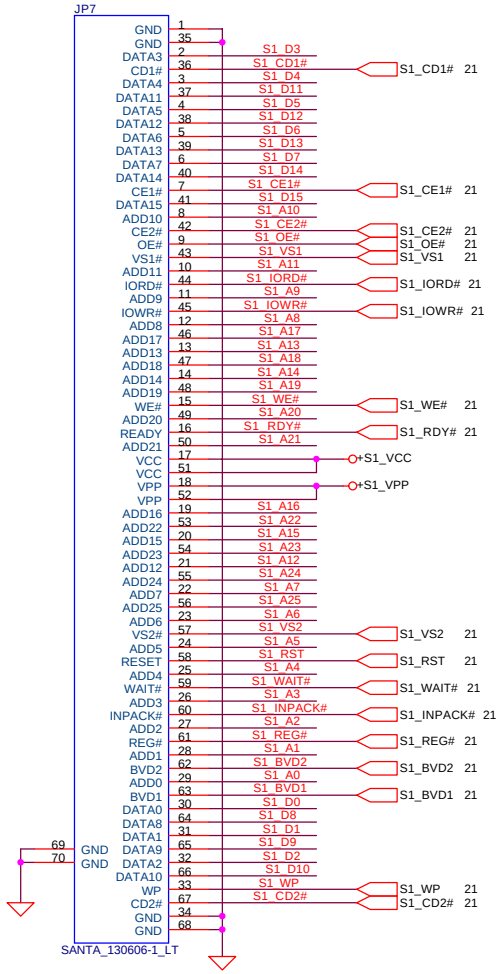

CardBus Socket

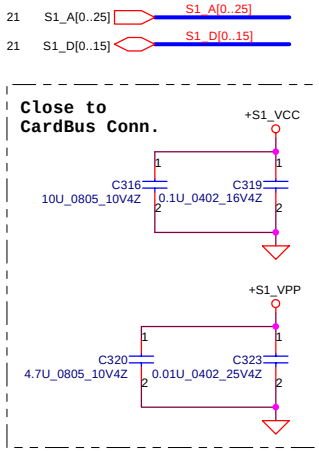

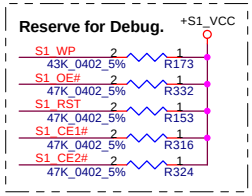

Security Classification	Compal Secret Data		
Issued Date	2005/11/01	Deciphered Date	2006/11/01

THIS SHEET OF ENGINEERING DRAWING IS THE PROPRIETARY PROPERTY OF COMPAL ELECTRONICS, INC. AND CONTAINS CONFIDENTIAL AND TRADE SECRET INFORMATION. THIS SHEET MAY NOT BE TRANSFERED FROM THE CUSTODY OF THE COMPETENT DIVISION OF R&D DEPARTMENT EXCEPT AS AUTHORIZED BY COMPAL ELECTRONICS, INC. NEITHER THIS SHEET NOR THE INFORMATION IT CONTAINS MAY BE USED BY OR DISCLOSED TO ANY THIRD PARTY WITHOUT PRIOR WRITTEN CONSENT OF COMPAL ELECTRONICS, INC.

Compal Electronics, Inc.

Title: CARD BUS SOCKET

Size: B | Document Number: HTW2E(LA-3201P) | Rev: 1.0

Date: Friday, April 21, 2006 | Sheet 22 of 46

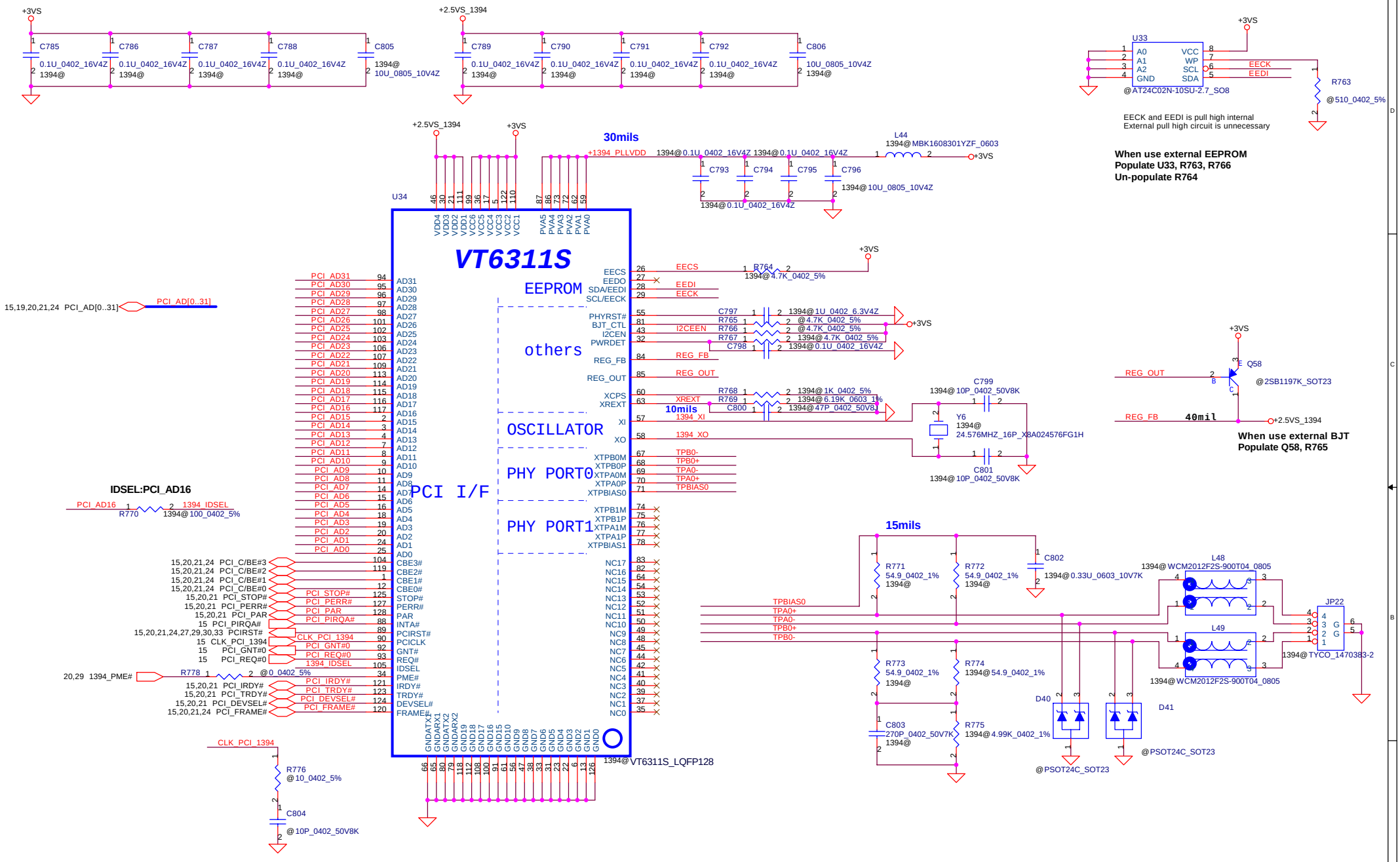

Security Classification	Compal Secret Data		
Issued Date	2005/11/01	Deciphered Date	2006/11/01

THIS SHEET OF ENGINEERING DRAWING IS THE PROPRIETARY PROPERTY OF COMPAL ELECTRONICS, INC. AND CONTAINS CONFIDENTIAL AND TRADE SECRET INFORMATION. THIS SHEET MAY NOT BE TRANSFERED FROM THE CUSTODY OF THE COMPETENT DIVISION OF R&D DEPARTMENT EXCEPT AS AUTHORIZED BY COMPAL ELECTRONICS, INC. NEITHER THIS SHEET NOR THE INFORMATION IT CONTAINS MAY BE USED BY OR DISCLOSED TO ANY THIRD PARTY WITHOUT PRIOR WRITTEN CONSENT OF COMPAL ELECTRONICS, INC.

Compal Electronics, Inc.

Title: IEEE1394 VIA VT6311S

Size: B | Document Number: HTW2E(LA-3201P) | Rev: 1.0

Date: Friday, April 21, 2006 | Sheet 23 of 46

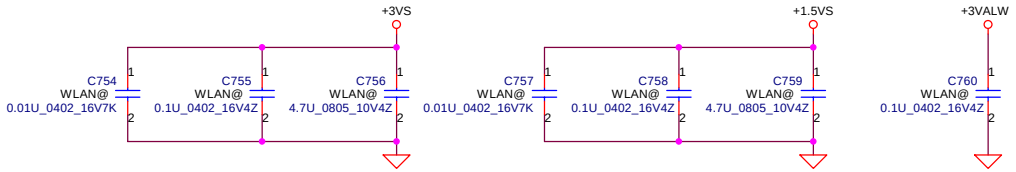

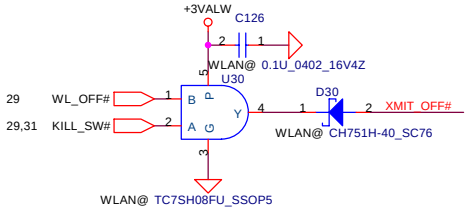

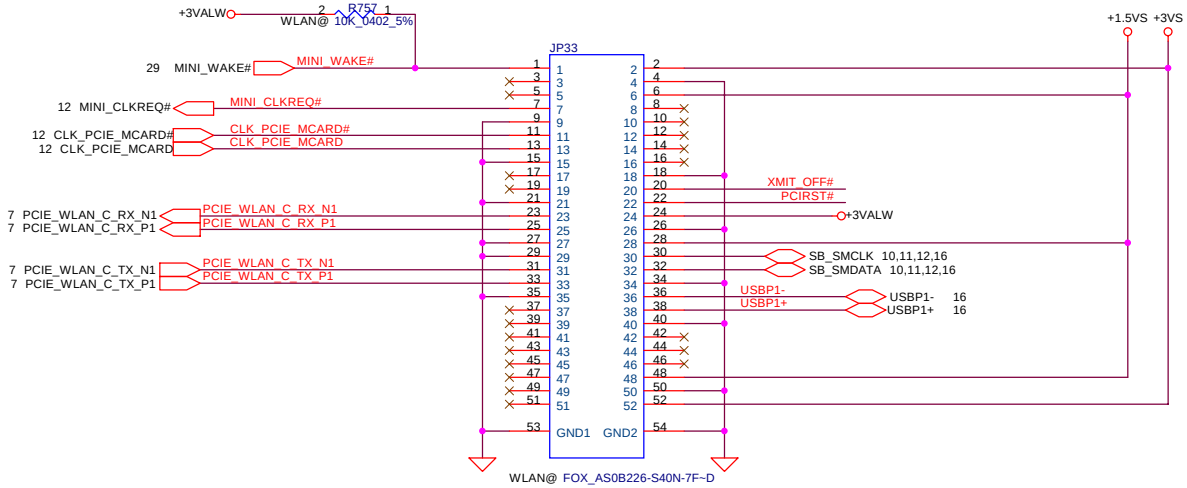

Mini-Express Card

Port 80 Debug Card Connector

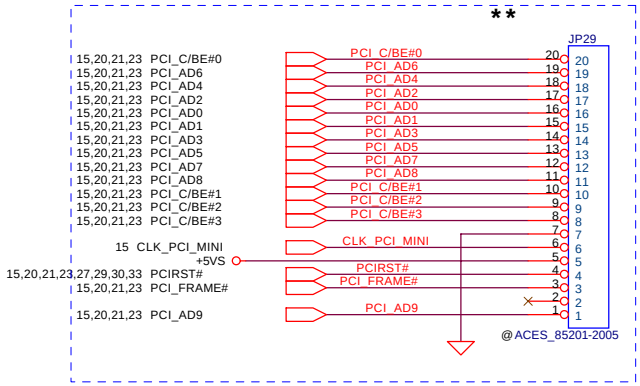

Place under MiniPCI Socket

Security Classification	Compal Secret Data		
Issued Date	2005/11/01	Deciphered Date	2006/11/01

THIS SHEET OF ENGINEERING DRAWING IS THE PROPRIETARY PROPERTY OF COMPAL ELECTRONICS, INC. AND CONTAINS CONFIDENTIAL AND TRADE SECRET INFORMATION. THIS SHEET MAY NOT BE TRANSFERED FROM THE CUSTODY OF THE COMPETENT DIVISION OF R&D DEPARTMENT EXCEPT AS AUTHORIZED BY COMPAL ELECTRONICS, INC. NEITHER THIS SHEET NOR THE INFORMATION IT CONTAINS MAY BE USED BY OR DISCLOSED TO ANY THIRD PARTY WITHOUT PRIOR WRITTEN CONSENT OF COMPAL ELECTRONICS, INC.

Compal Electronics, Inc.

Title: MINI PCI SLOT

Size: B | Document Number: HTW2E(LA-3201P) | Rev: 1.0

Date: Friday, April 21, 2006 | Sheet 24 of 46

HD Audio Codec

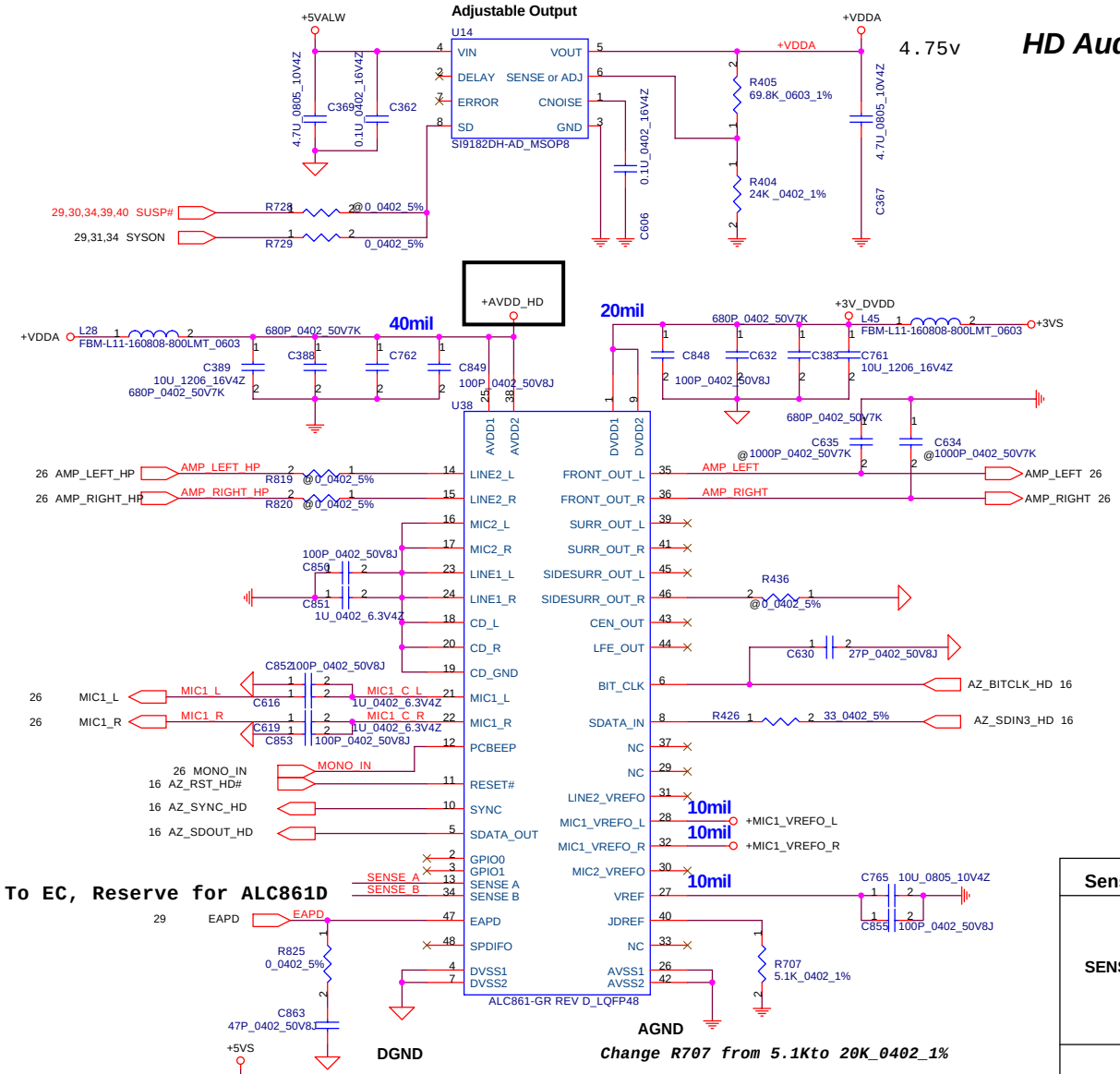

To EC, Reserve for ALC861D

Change R707 from 5.1Kto 20K_0402_1%

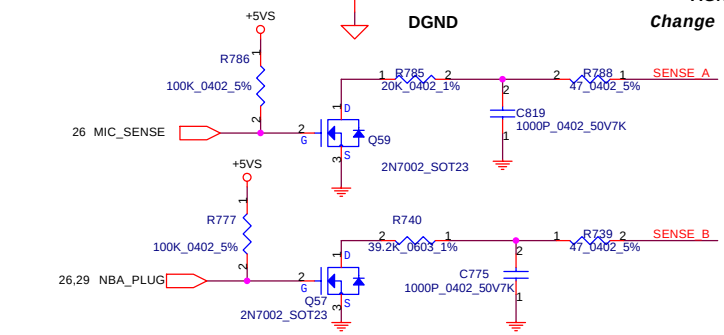

Change R788 to 0_0402_5%
Delete C819
for ALC861 ver. D

Change R739 to 0_0402_5%
Delete C775
for ALC861 ver. D

Headphone AMP

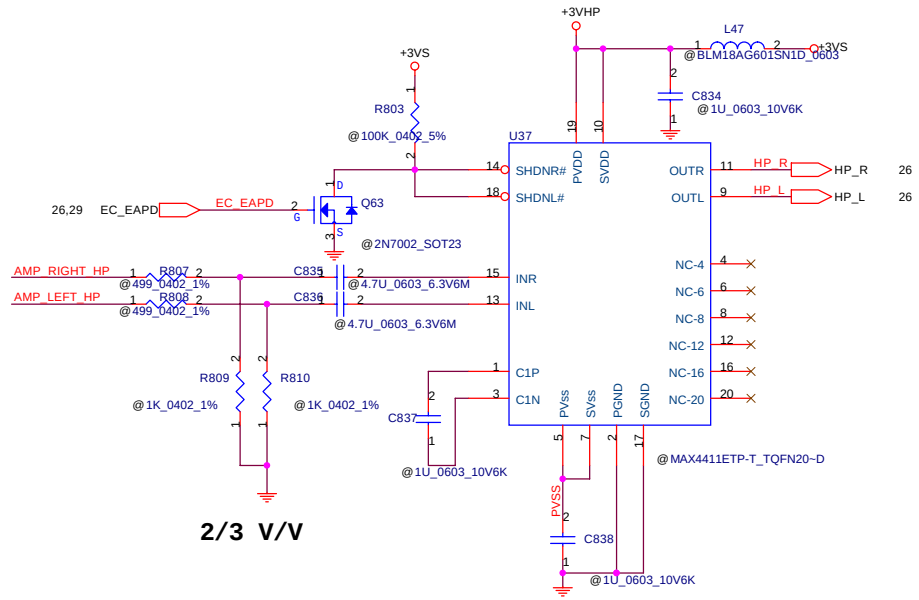

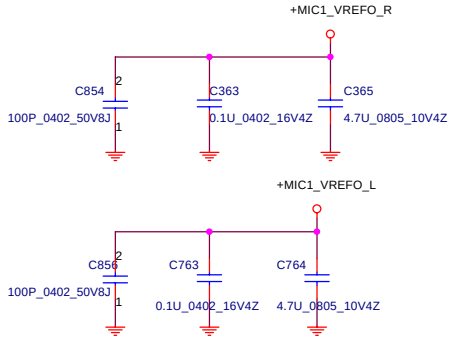

Sense Pin	Impedance	Codec Signals
SENSE A	39.2K	PORT-A (PIN 39, 41)
	20K	PORT-B (PIN 21, 22)
	10K	PORT-C (PIN 23, 24)
	5.1K	PORT-D (PIN 35, 36)
SENSE B	39.2K	PORT-E (PIN 14, 15)
	20K	PORT-F (PIN 16, 17)
	10K	PORT-G (PIN 43, 44)
	5.1K	PORT-H (PIN 45, 46)

Security Classification	Compal Secret Data		
Issued Date	2005/11/01	Deciphered Date	2006/11/01

THIS SHEET OF ENGINEERING DRAWING IS THE PROPRIETARY PROPERTY OF COMPAL ELECTRONICS, INC. AND CONTAINS CONFIDENTIAL AND TRADE SECRET INFORMATION. THIS SHEET MAY NOT BE TRANSFERED FROM THE CUSTODY OF THE COMPETENT DIVISION OF R&D DEPARTMENT EXCEPT AS AUTHORIZED BY COMPAL ELECTRONICS, INC. NEITHER THIS SHEET NOR THE INFORMATION IT CONTAINS MAY BE USED BY OR DISCLOSED TO ANY THIRD PARTY WITHOUT PRIOR WRITTEN CONSENT OF COMPAL ELECTRONICS, INC.

Compal Electronics, Inc.

Title: AC97 CODEC ALC250D

Size: B | Document Number: HTW2E(LA-3201P) | Rev: 1.0

Date: Friday, April 21, 2006 | Sheet 25 of 46

Gain Setting		
	DB	VOL AMP
SPK	10	0.66-3.7
HP	0	1.25-3.9

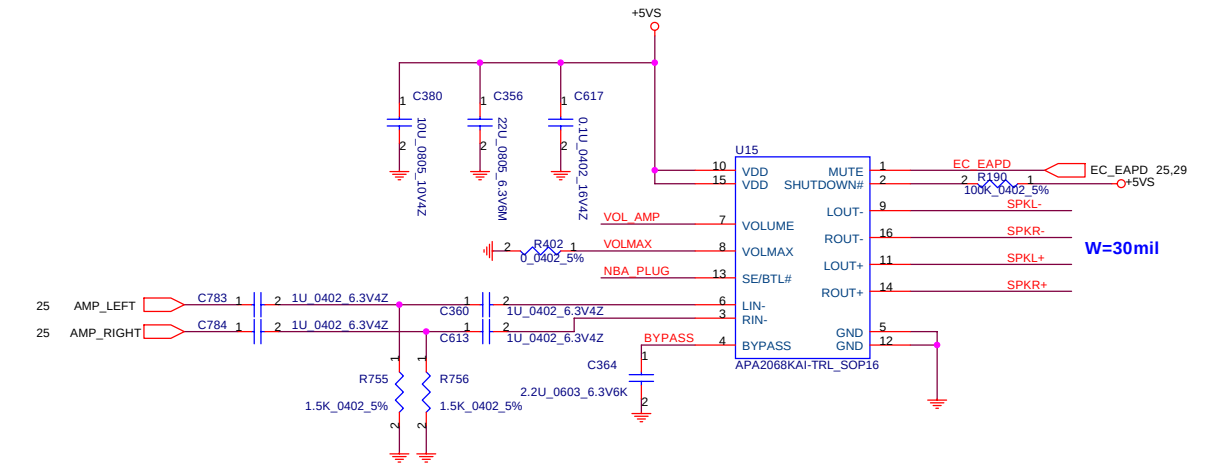

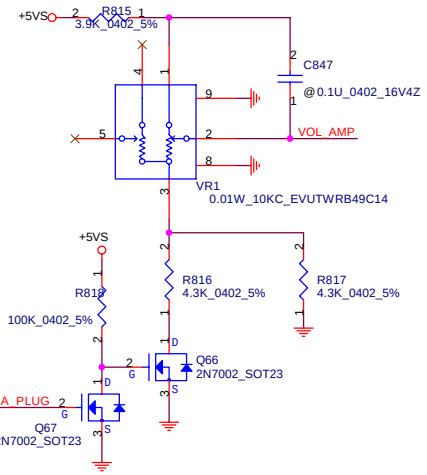

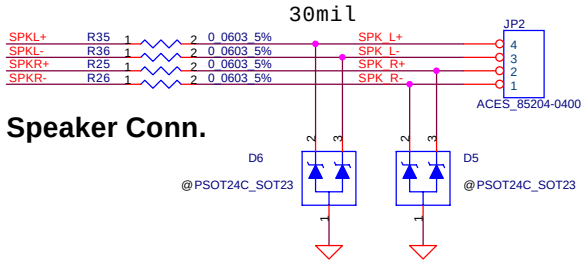

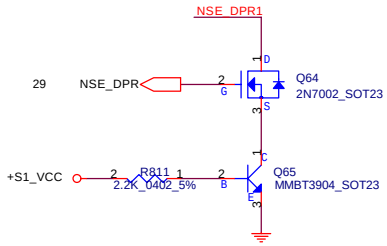

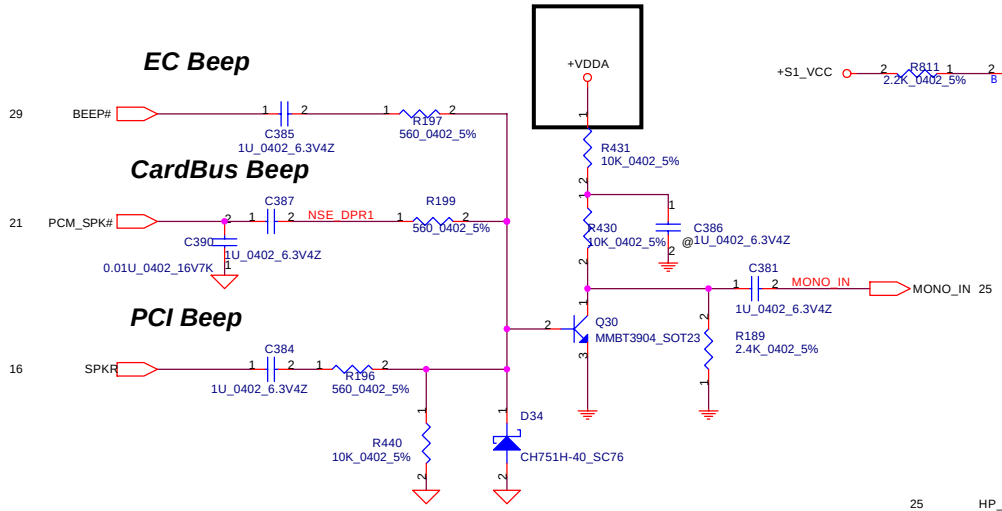

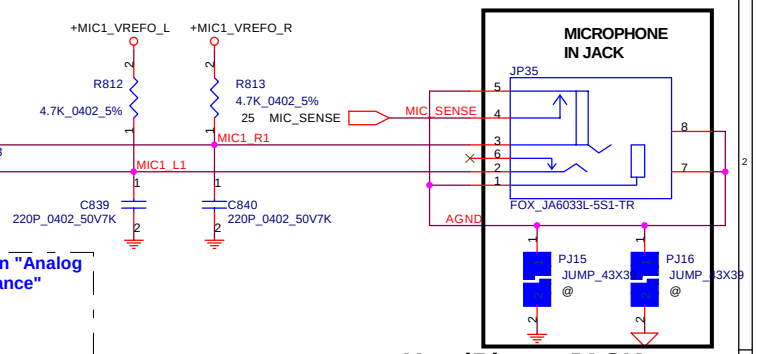

Microsoft Audio Hardware Design, Section "Analog Audio Classification Using Device Impedance" recommand Audio Device Impedance:

Headset : 32 ~100Ohm (C > 248UF)
Paassive Speakers: 4 ~ 16Ohm (C >1989UF)
Active Speakers: 3K ~ 15K Ohm (C >2.65UF)

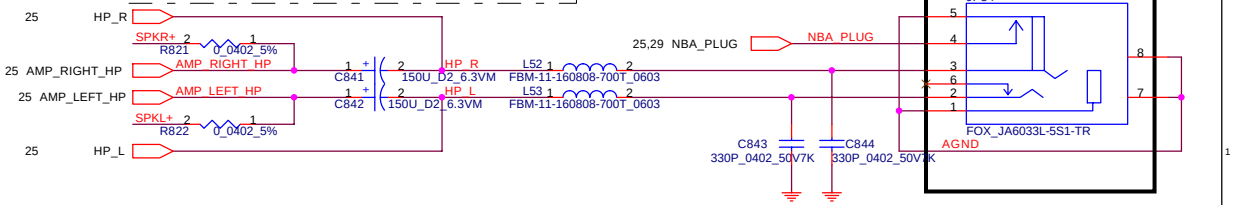

Security Classification	Compal Secret Data		
Issued Date	2005/11/01	Deciphered Date	2006/11/01

THIS SHEET OF ENGINEERING DRAWING IS THE PROPRIETARY PROPERTY OF COMPAL ELECTRONICS, INC. AND CONTAINS CONFIDENTIAL AND TRADE SECRET INFORMATION. THIS SHEET MAY NOT BE TRANSFERED FROM THE CUSTODY OF THE COMPETENT DIVISION OF R&D DEPARTMENT EXCEPT AS AUTHORIZED BY COMPAL ELECTRONICS, INC. NEITHER THIS SHEET NOR THE INFORMATION IT CONTAINS MAY BE USED BY OR DISCLOSED TO ANY THIRD PARTY WITHOUT PRIOR WRITTEN CONSENT OF COMPAL ELECTRONICS, INC.

Compal Electronics, Inc.

Title: AMP&Audio Jack

Size: B | Document Number: HTW2E(LA-3201P) | Rev: 1.0

Date: Thursday, April 27, 2006 | Sheet 26 of 46

TPM1.2 on board

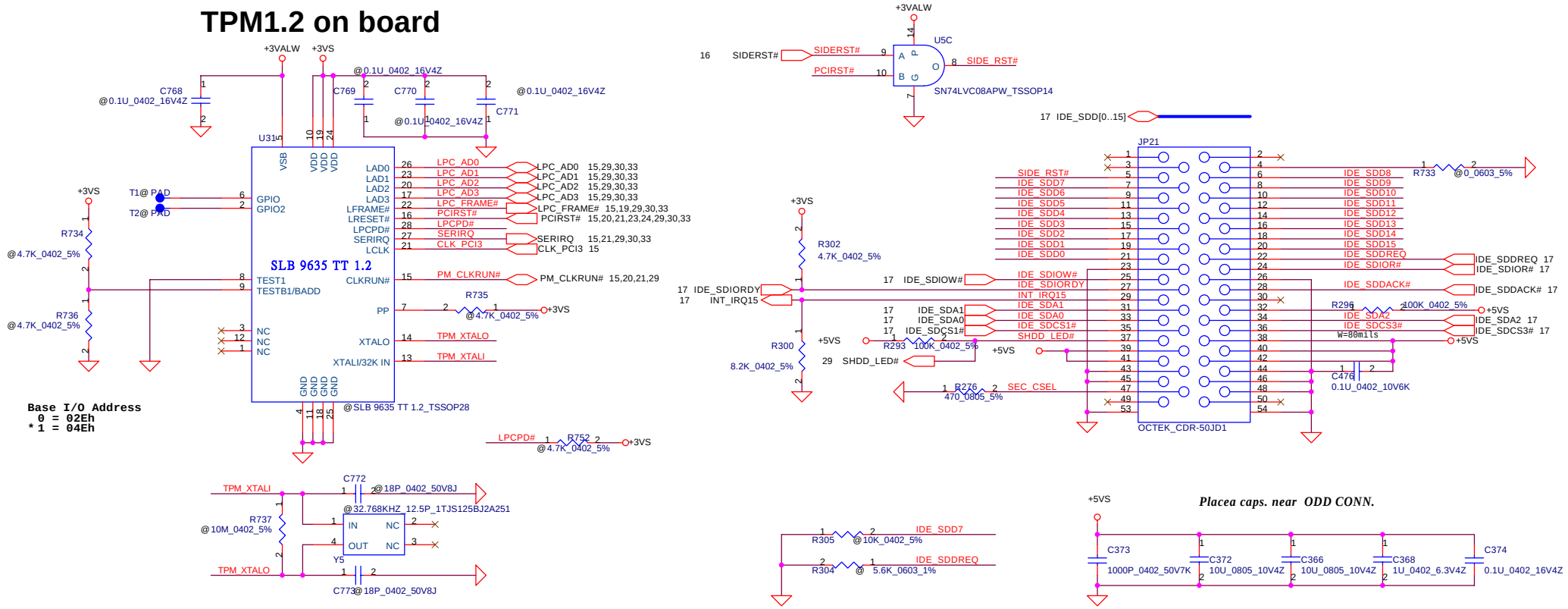

Security Classification	Compal Secret Data		
Issued Date	2005/11/01	Deciphered Date	2006/11/01

THIS SHEET OF ENGINEERING DRAWING IS THE PROPRIETARY PROPERTY OF COMPAL ELECTRONICS, INC. AND CONTAINS CONFIDENTIAL AND TRADE SECRET INFORMATION. THIS SHEET MAY NOT BE TRANSFERED FROM THE CUSTODY OF THE COMPETENT DIVISION OF R&D DEPARTMENT EXCEPT AS AUTHORIZED BY COMPAL ELECTRONICS, INC. NEITHER THIS SHEET NOR THE INFORMATION IT CONTAINS MAY BE USED BY OR DISCLOSED TO ANY THIRD PARTY WITHOUT PRIOR WRITTEN CONSENT OF COMPAL ELECTRONICS, INC.

Compal Electronics, Inc.

Title: TPM/ ODD CONNECTORS

Size: B | Document Number: HTW2E(LA-3201P) | Rev: 1.0

Date: Friday, April 21, 2006 | Sheet 27 of 46

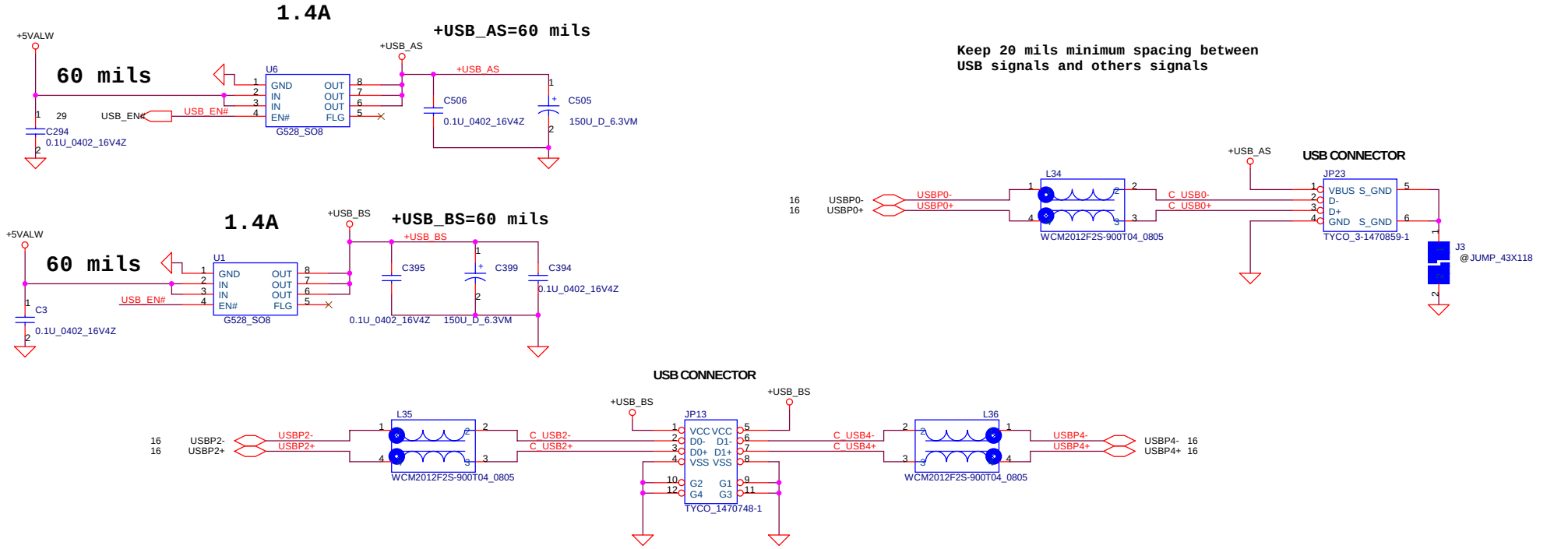

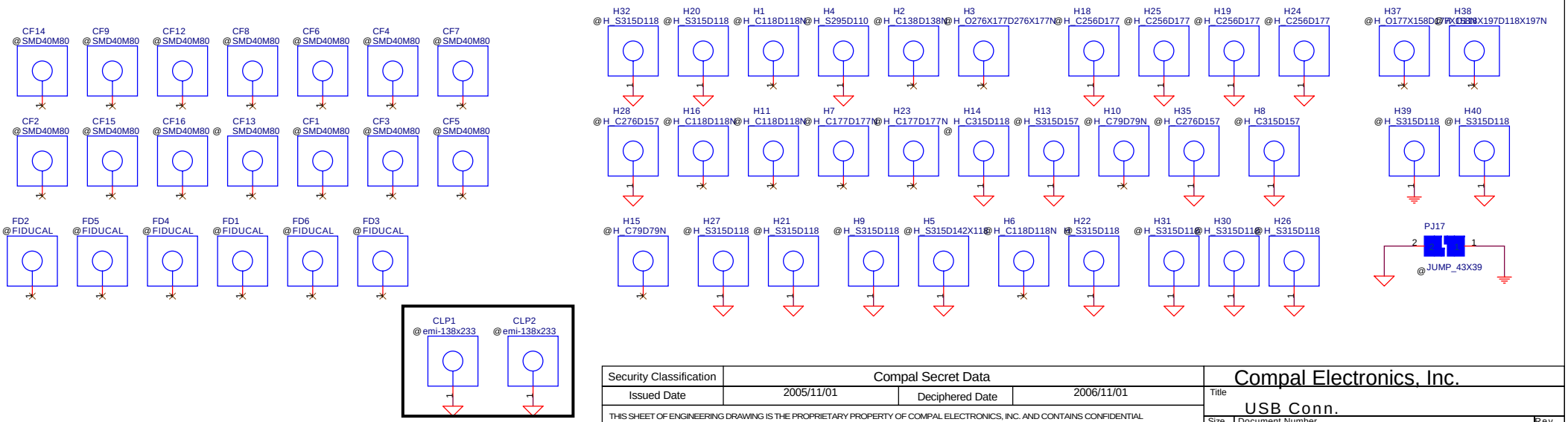

Security Classification	Compal Secret Data		
Issued Date	2005/11/01	Deciphered Date	2006/11/01

THIS SHEET OF ENGINEERING DRAWING IS THE PROPRIETARY PROPERTY OF COMPAL ELECTRONICS, INC. AND CONTAINS CONFIDENTIAL AND TRADE SECRET INFORMATION. THIS SHEET MAY NOT BE TRANSFERED FROM THE CUSTODY OF THE COMPETENT DIVISION OF R&D DEPARTMENT EXCEPT AS AUTHORIZED BY COMPAL ELECTRONICS, INC. NEITHER THIS SHEET NOR THE INFORMATION IT CONTAINS MAY BE USED BY OR DISCLOSED TO ANY THIRD PARTY WITHOUT PRIOR WRITTEN CONSENT OF COMPAL ELECTRONICS, INC.

Compal Electronics, Inc.

Title: USB Conn.

Size	Document Number	Rev
B	HTW2E(LA-3201P)	1.0

Date: Friday, April 21, 2006 Sheet 28 of 46

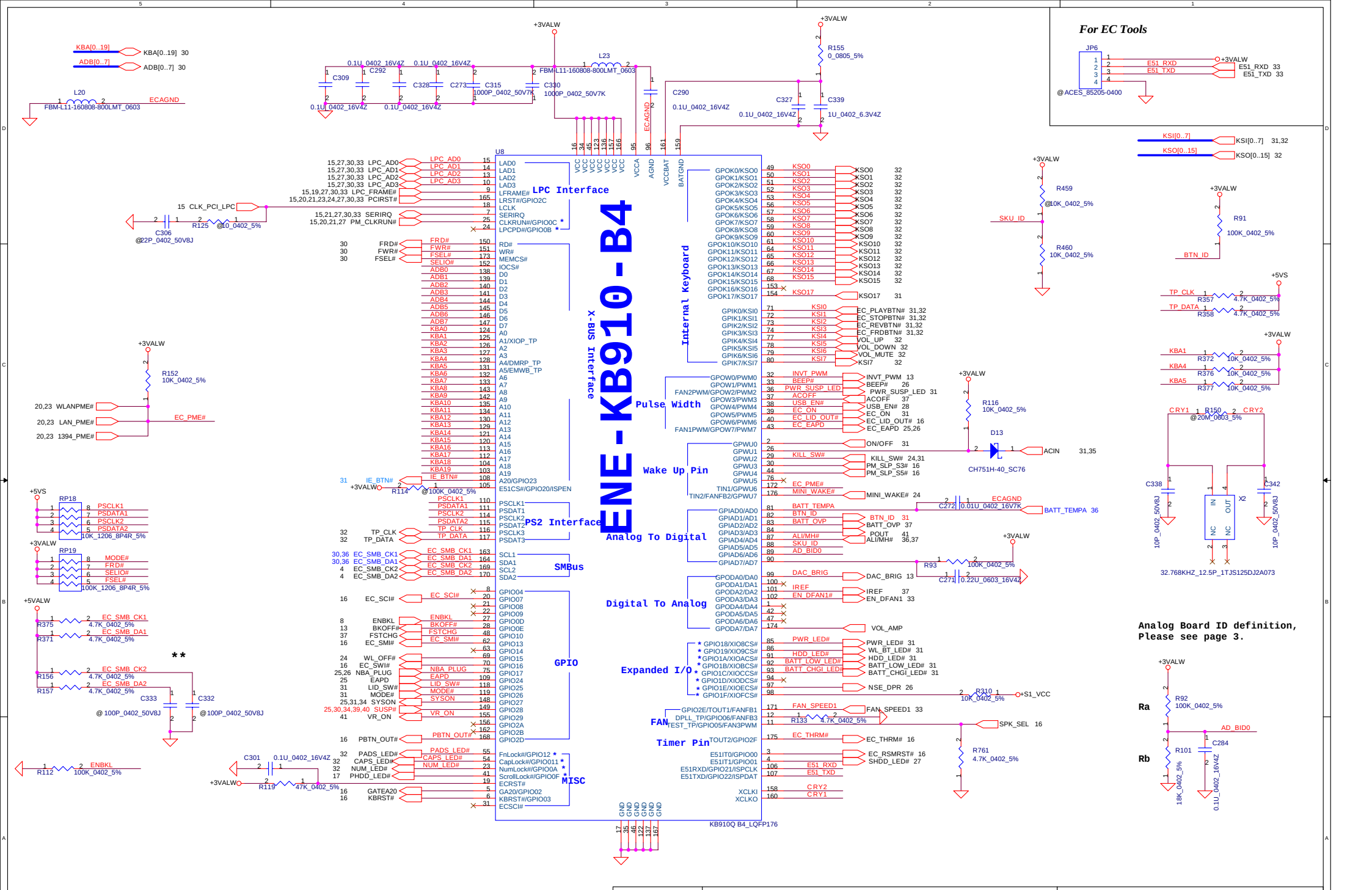

Security Classification	Compal Secret Data		
Issued Date	2005/11/01	Deciphered Date	2006/11/01

THIS SHEET OF ENGINEERING DRAWING IS THE PROPRIETARY PROPERTY OF COMPAL ELECTRONICS, INC. AND CONTAINS CONFIDENTIAL AND TRADE SECRET INFORMATION. THIS SHEET MAY NOT BE TRANSFERED FROM THE CUSTODY OF THE COMPETENT DIVISION OF R&D DEPARTMENT EXCEPT AS AUTHORIZED BY COMPAL ELECTRONICS, INC. NEITHER THIS SHEET NOR THE INFORMATION IT CONTAINS MAY BE USED BY OR DISCLOSED TO ANY THIRD PARTY WITHOUT PRIOR WRITTEN CONSENT OF COMPAL ELECTRONICS, INC.

Title: ENE-KB910

Size: Custom | Document Number: HTW2E(LA-3201P) | Rev: 1.0

Date: Friday, April 21, 2006 | Sheet 29 of 46

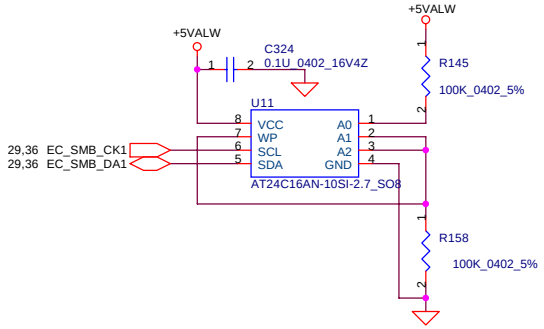

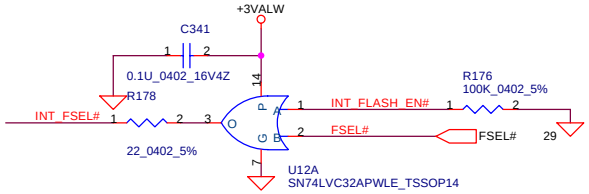

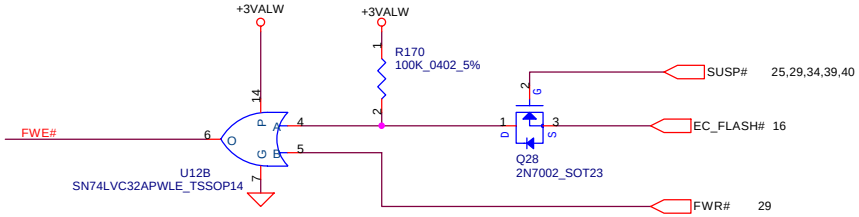

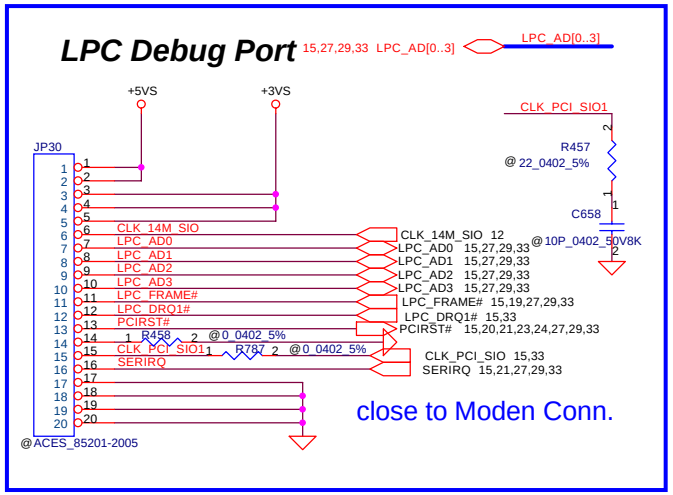

29 KBA[0..19] KBA[0..19]

29 ADB[0..7] ADB[0..7]

1MB Flash ROM

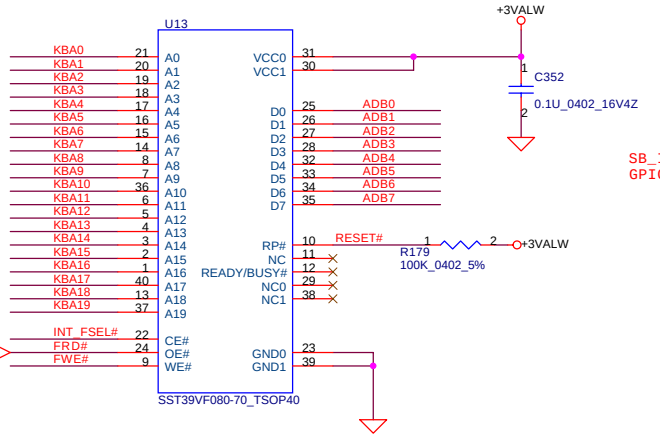

SB_INT_FLASH_SEL tie to ATI SB GPIO1 and pull down

1MB ROM Socket

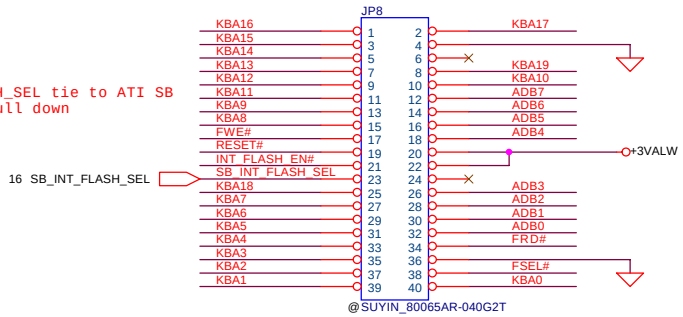

Security Classification	Compal Secret Data		
Issued Date	2005/11/01	Deciphered Date	2006/11/01

THIS SHEET OF ENGINEERING DRAWING IS THE PROPRIETARY PROPERTY OF COMPAL ELECTRONICS, INC. AND CONTAINS CONFIDENTIAL AND TRADE SECRET INFORMATION. THIS SHEET MAY NOT BE TRANSFERED FROM THE CUSTODY OF THE COMPETENT DIVISION OF R&D DEPARTMENT EXCEPT AS AUTHORIZED BY COMPAL ELECTRONICS, INC. NEITHER THIS SHEET NOR THE INFORMATION IT CONTAINS MAY BE USED BY OR DISCLOSED TO ANY THIRD PARTY WITHOUT PRIOR WRITTEN CONSENT OF COMPAL ELECTRONICS, INC.

Compal Electronics, Inc.

Title: BIOS& I/O PORT

Size: B | Document Number: HTW2E(LA-3201P) | Rev: 1.0

Date: Friday, April 21, 2006 | Sheet 30 of 46

Switch Board Conn.

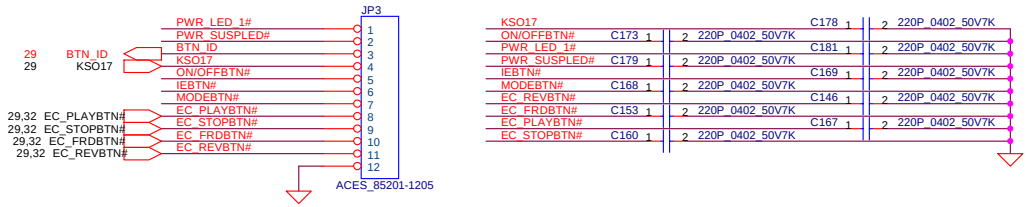

LID Switch

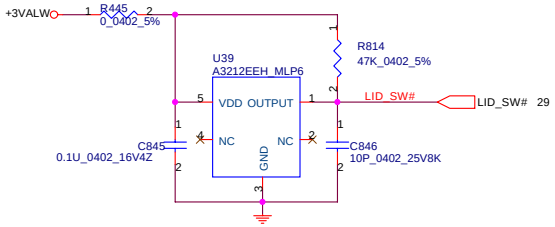

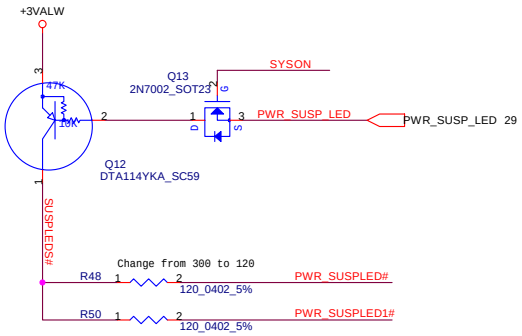

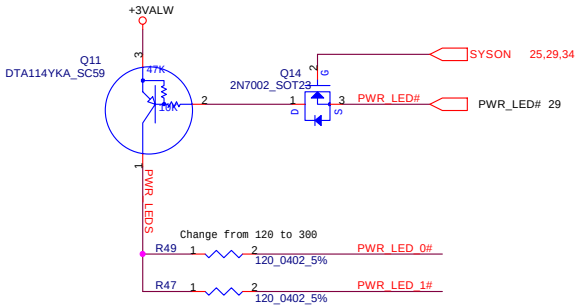

Power Button

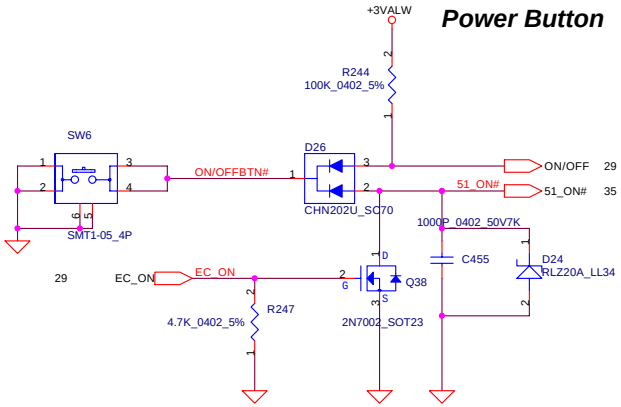

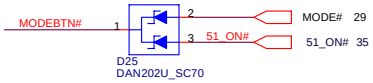

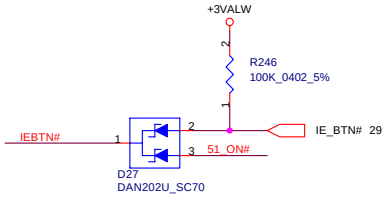

WL&BT LED

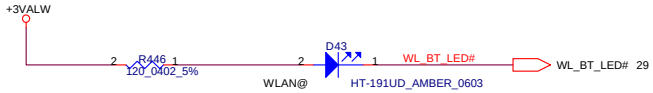

POWER/ON LED

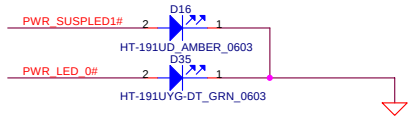

AC IN LED

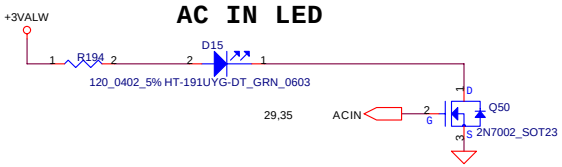

Kill SWITCH

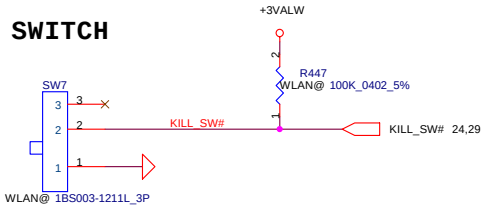

HDD LED

BATTERY CHG

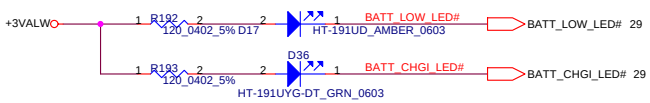

Security Classification	Compal Secret Data		
Issued Date	2005/11/01	Deciphered Date	2006/11/01

THIS SHEET OF ENGINEERING DRAWING IS THE PROPRIETARY PROPERTY OF COMPAL ELECTRONICS, INC. AND CONTAINS CONFIDENTIAL AND TRADE SECRET INFORMATION. THIS SHEET MAY NOT BE TRANSFERED FROM THE CUSTODY OF THE COMPETENT DIVISION OF R&D DEPARTMENT EXCEPT AS AUTHORIZED BY COMPAL ELECTRONICS, INC. NEITHER THIS SHEET NOR THE INFORMATION IT CONTAINS MAY BE USED BY OR DISCLOSED TO ANY THIRD PARTY WITHOUT PRIOR WRITTEN CONSENT OF COMPAL ELECTRONICS, INC.

Compal Electronics, Inc.

Title: Kill SW/ Sub Conn./LEDS

Size: Custom | Document Number: HTW2E(LA-3201P) | Rev: 1.0

Date: Friday, April 21, 2006 | Sheet 31 of 46

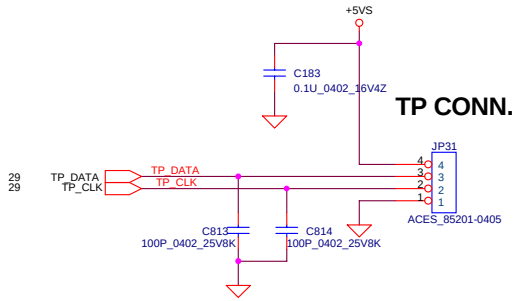

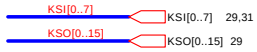

INT_KBD CONN.

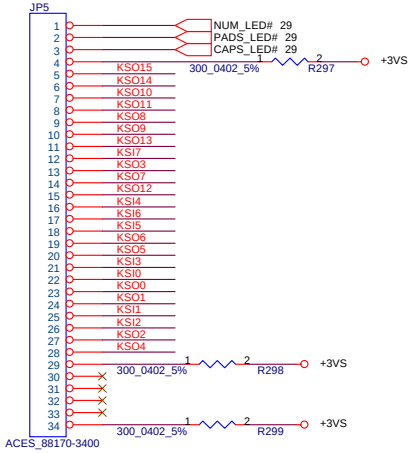

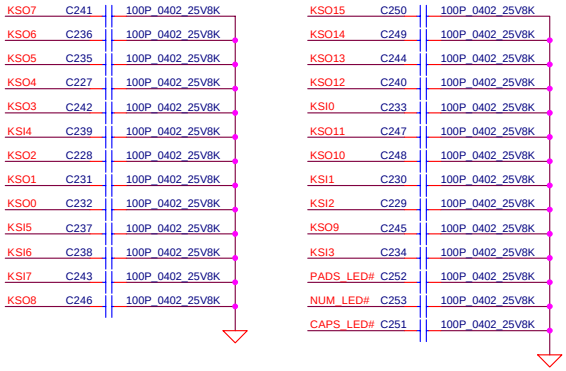

Security Classification	Compal Secret Data		
Issued Date	2005/11/01	Deciphered Date	2006/11/01

THIS SHEET OF ENGINEERING DRAWING IS THE PROPRIETARY PROPERTY OF COMPAL ELECTRONICS, INC. AND CONTAINS CONFIDENTIAL AND TRADE SECRET INFORMATION. THIS SHEET MAY NOT BE TRANSFERRED FROM THE CUSTODY OF THE COMPETENT DIVISION OF R&D DEPARTMENT EXCEPT AS AUTHORIZED BY COMPAL ELECTRONICS, INC. NEITHER THIS SHEET NOR THE INFORMATION IT CONTAINS MAY BE USED BY OR DISCLOSED TO ANY THIRD PARTY WITHOUT PRIOR WRITTEN CONSENT OF COMPAL ELECTRONICS, INC.

Compal Electronics, Inc.

Title: KB/Touch Pad& hibernation

Size: Custom | Document Number: HTW2E(LA-3201P) | Rev: 1.0

Date: Friday, April 21, 2006 | Sheet 32 of 46

FAN Conn

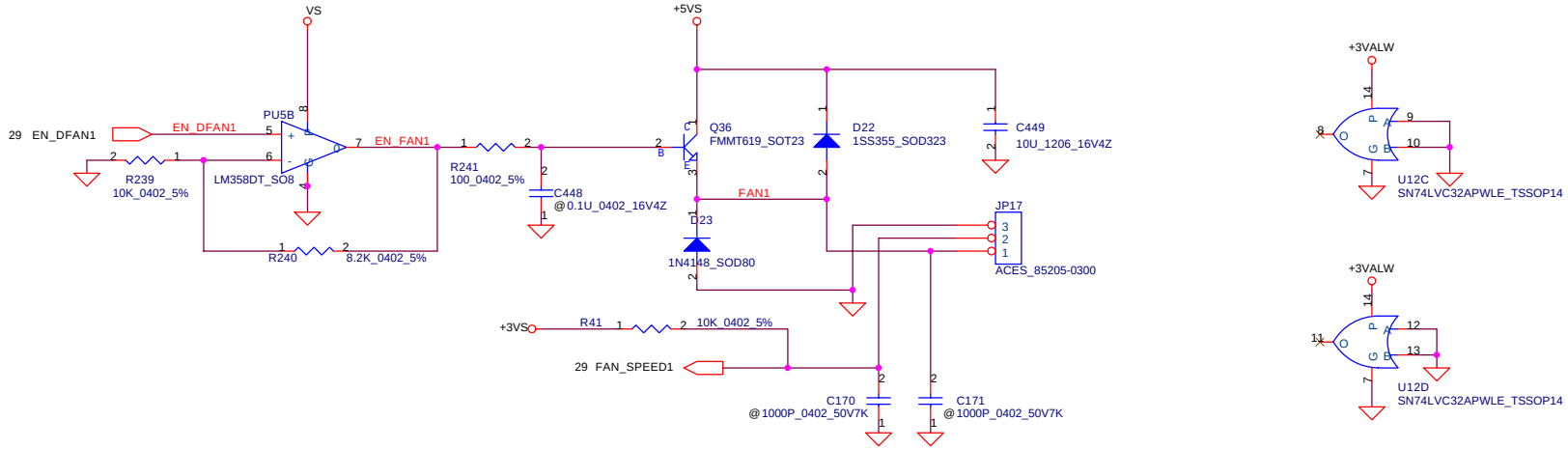

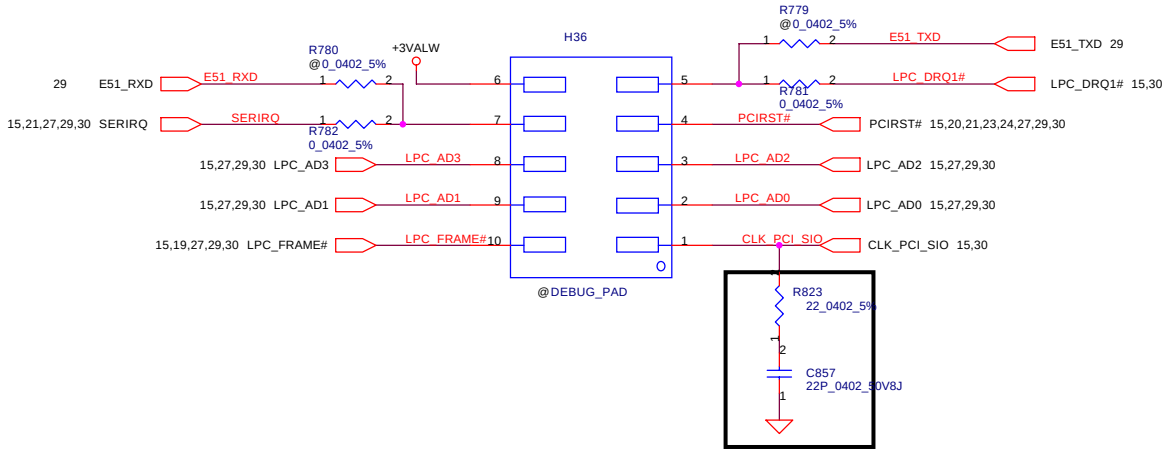

LPC Debug card

BOM

Security Classification	Compal Secret Data		
Issued Date	2005/03/01	Deciphered Date	2006/03/01

THIS SHEET OF ENGINEERING DRAWING IS THE PROPRIETARY PROPERTY OF COMPAL ELECTRONICS, INC. AND CONTAINS CONFIDENTIAL AND TRADE SECRET INFORMATION. THIS SHEET MAY NOT BE TRANSFERED FROM THE CUSTODY OF THE COMPETENT DIVISION OF R&D DEPARTMENT EXCEPT AS AUTHORIZED BY COMPAL ELECTRONICS, INC. NEITHER THIS SHEET NOR THE INFORMATION IT CONTAINS MAY BE USED BY OR DISCLOSED TO ANY THIRD PARTY WITHOUT PRIOR WRITTEN CONSENT OF COMPAL ELECTRONICS, INC.

Compal Electronics, Inc.

Title: FAN & MDC

Size: B | Document Number: HTW2E(LA-3201P) | Rev: 1.0

Date: Thursday, April 27, 2006 | Sheet 33 of 46

+1.8V TO +1.8VS

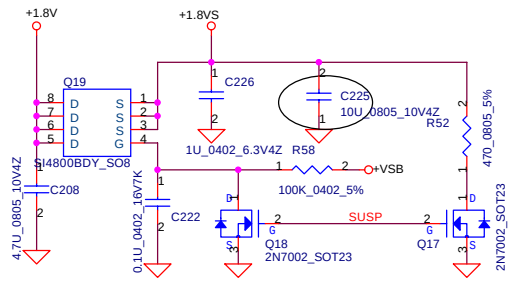

+5VALW TO +5VS

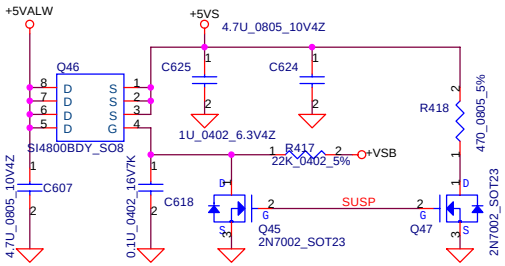

+1.8VALW TO +1.8V

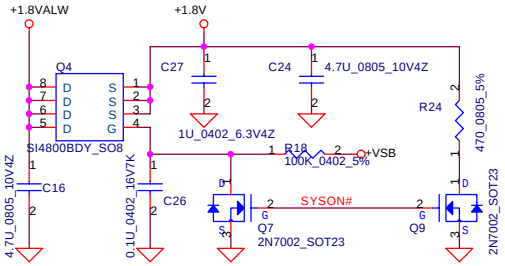

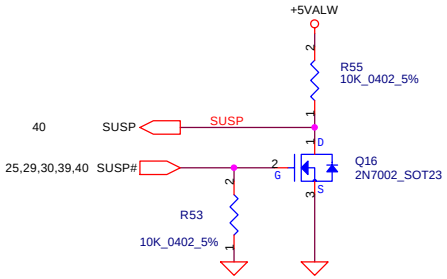

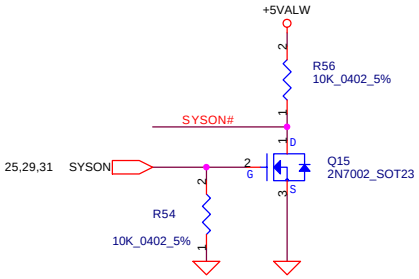

+3VALW TO +3VS

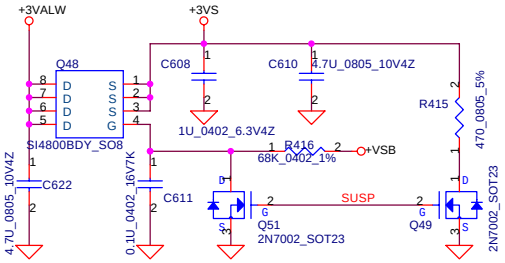

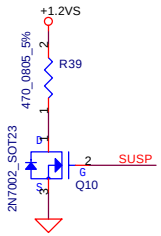

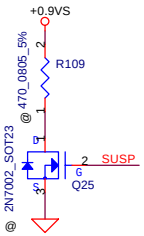

Security Classification	Compal Secret Data		
Issued Date	2005/11/01	Deciphered Date	2006/11/01

THIS SHEET OF ENGINEERING DRAWING IS THE PROPRIETARY PROPERTY OF COMPAL ELECTRONICS, INC. AND CONTAINS CONFIDENTIAL AND TRADE SECRET INFORMATION. THIS SHEET MAY NOT BE TRANSFERED FROM THE CUSTODY OF THE COMPETENT DIVISION OF R&D DEPARTMENT EXCEPT AS AUTHORIZED BY COMPAL ELECTRONICS, INC. NEITHER THIS SHEET NOR THE INFORMATION IT CONTAINS MAY BE USED BY OR DISCLOSED TO ANY THIRD PARTY WITHOUT PRIOR WRITTEN CONSENT OF COMPAL ELECTRONICS, INC.

Compal Electronics, Inc.

Title: DC-DC INTERFACE

Size: B | Document Number: HTW2E(LA-3201P) | Rev: 1.0

Date: Wednesday, April 26, 2006 | Sheet 34 of 46

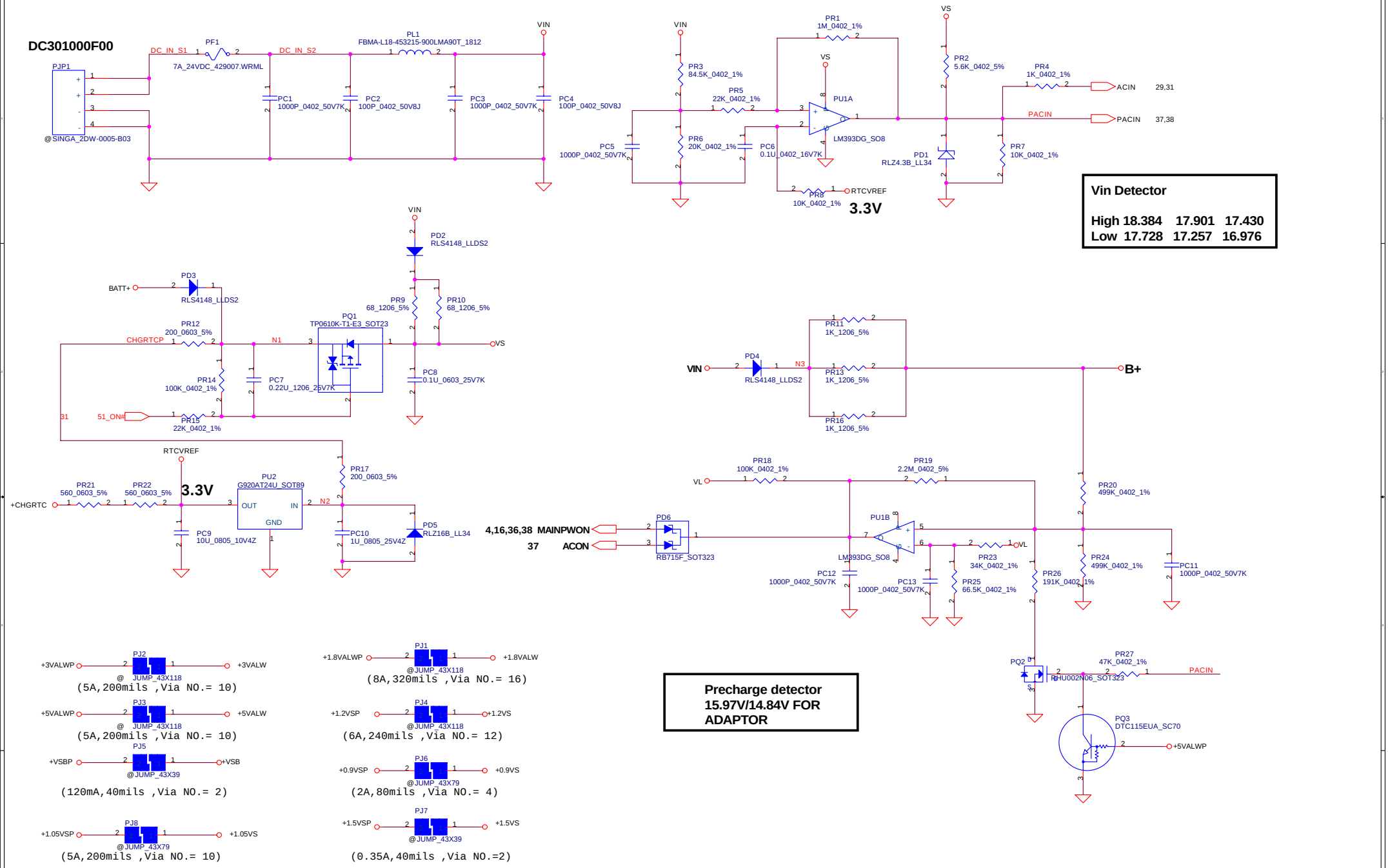

Security Classification	Compal Secret Data		
Issued Date	2005/03/01	Deciphered Date	2006/03/01

THIS SHEET OF ENGINEERING DRAWING IS THE PROPRIETARY PROPERTY OF COMPAL ELECTRONICS, INC. AND CONTAINS CONFIDENTIAL AND TRADE SECRET INFORMATION. THIS SHEET MAY NOT BE TRANSFERED FROM THE CUSTODY OF THE COMPETENT DIVISION OF R&D DEPARTMENT EXCEPT AS AUTHORIZED BY COMPAL ELECTRONICS, INC. NEITHER THIS SHEET NOR THE INFORMATION IT CONTAINS MAY BE USED BY OR DISCLOSED TO ANY THIRD PARTY WITHOUT PRIOR WRITTEN CONSENT OF COMPAL ELECTRONICS, INC.

Compal Electronics, Inc.

Title: DCIN & DETECTOR

Size | Document Number | Rev 1.0

Date: Friday, April 21, 2006 | Sheet 35 of 46

PH1 under CPU botten side :
CPU thermal protection at 84 degree C
Recovery at 45 degree C

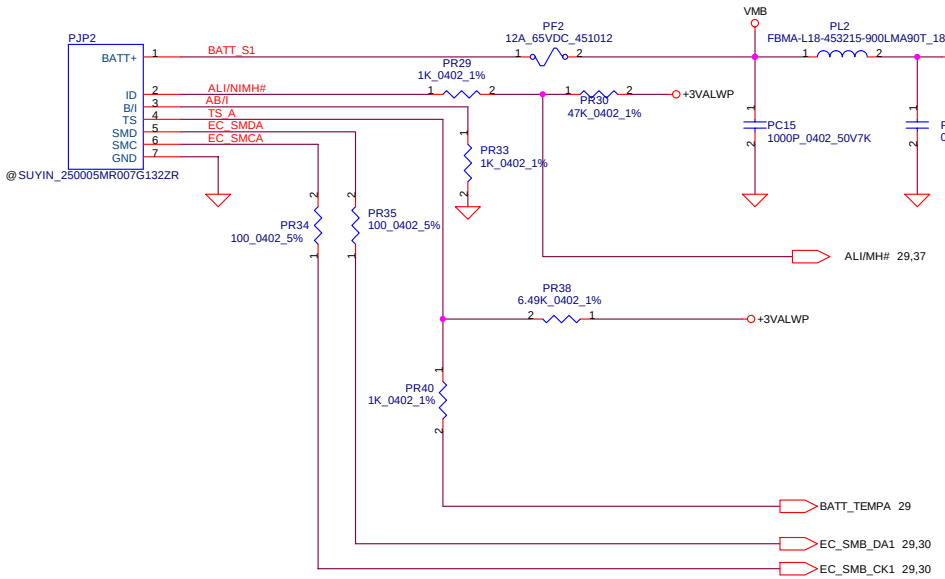

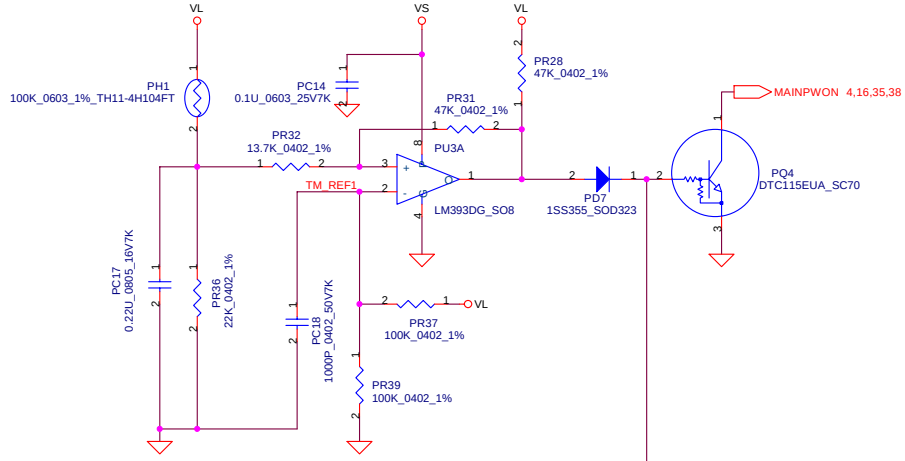

PH2 near main Battery CONN :
BAT. thermal protection at 79 degree C
Recovery at 45 degree C

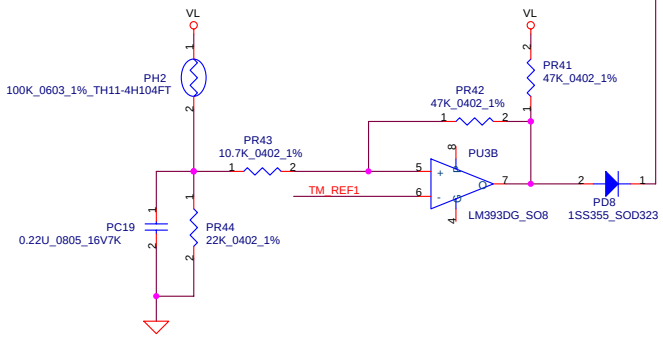

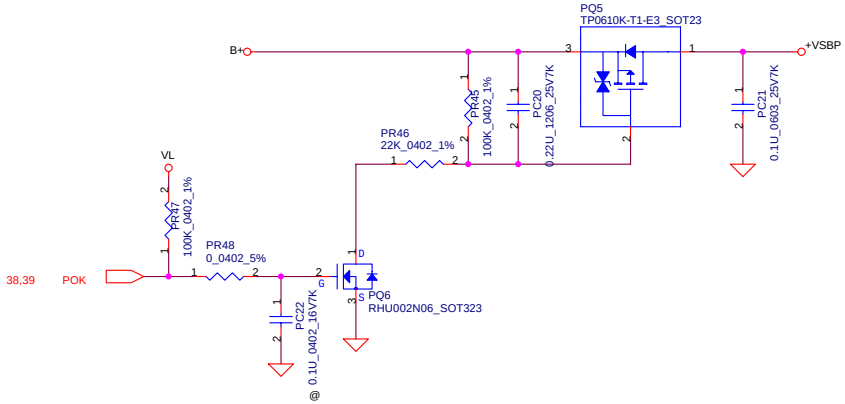

Security Classification	Compal Secret Data		
Issued Date	2005/03/01	Deciphered Date	2006/03/01

THIS SHEET OF ENGINEERING DRAWING IS THE PROPRIETARY PROPERTY OF COMPAL ELECTRONICS, INC. AND CONTAINS CONFIDENTIAL AND TRADE SECRET INFORMATION. THIS SHEET MAY NOT BE TRANSFERED FROM THE CUSTODY OF THE COMPETENT DIVISION OF R&D DEPARTMENT EXCEPT AS AUTHORIZED BY COMPAL ELECTRONICS, INC. NEITHER THIS SHEET NOR THE INFORMATION IT CONTAINS MAY BE USED BY OR DISCLOSED TO ANY THIRD PARTY WITHOUT PRIOR WRITTEN CONSENT OF COMPAL ELECTRONICS, INC.

Compal Electronics, Inc.

Title: BATTERY CONN / OTP

Size | Document Number | Rev 1.0

Date: Friday, April 21, 2006 | Sheet 36 of 46

Charger

Iadp=0~3.125A

Fosc=14100/Rt=14100/47=300KHz

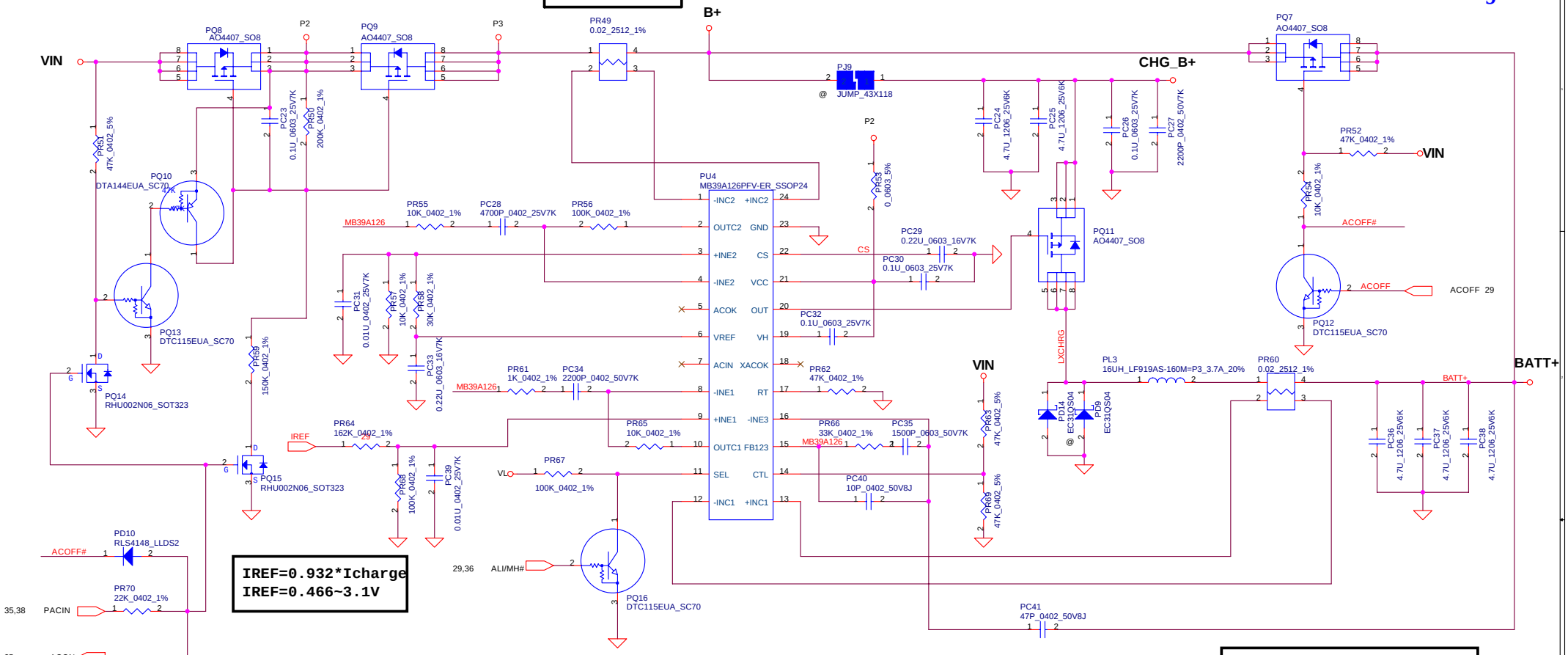

IREF=0.932*Icharge
IREF=0.466~3.1V

Charge voltage
3S CC-CV MODE : 12.6V (SEL=L , ALI/MH#=3.3V)
4S CC-CV MODE : 16.8V (SEL=H , ALI/MH#=0V)

CC=3A , IREF=3.144V
(100K/(100K+162K))*3.144V=1.2V
1.2/(20*0.02)=3A

CP Point=3.125A
5V*(10K/(30k+10k))=1.25V
1.25V/(20*0.02)=3.125A

LI-3S :13.5V----BATT-OVP=1.5V
LI-4S :18V----BATT-OVP=2V
BATT-OVP=0.111*BATT+

Security Classification	Compal Secret Data		
Issued Date	2005/03/01	Deciphered Date	2006/03/01

THIS SHEET OF ENGINEERING DRAWING IS THE PROPRIETARY PROPERTY OF COMPAL ELECTRONICS, INC. AND CONTAINS CONFIDENTIAL AND TRADE SECRET INFORMATION. THIS SHEET MAY NOT BE TRANSFERED FROM THE CUSTODY OF THE COMPETENT DIVISION OF R&D DEPARTMENT EXCEPT AS AUTHORIZED BY COMPAL ELECTRONICS, INC. NEITHER THIS SHEET NOR THE INFORMATION IT CONTAINS MAY BE USED BY OR DISCLOSED TO ANY THIRD PARTY WITHOUT PRIOR WRITTEN CONSENT OF COMPAL ELECTRONICS, INC.

Compal Electronics, Inc.

Title: CHARGER

Size | Document Number | Rev 1.0

Date: Friday, April 21, 2006 | Sheet 37 of 46

+3.3VALWP/+5VALWP

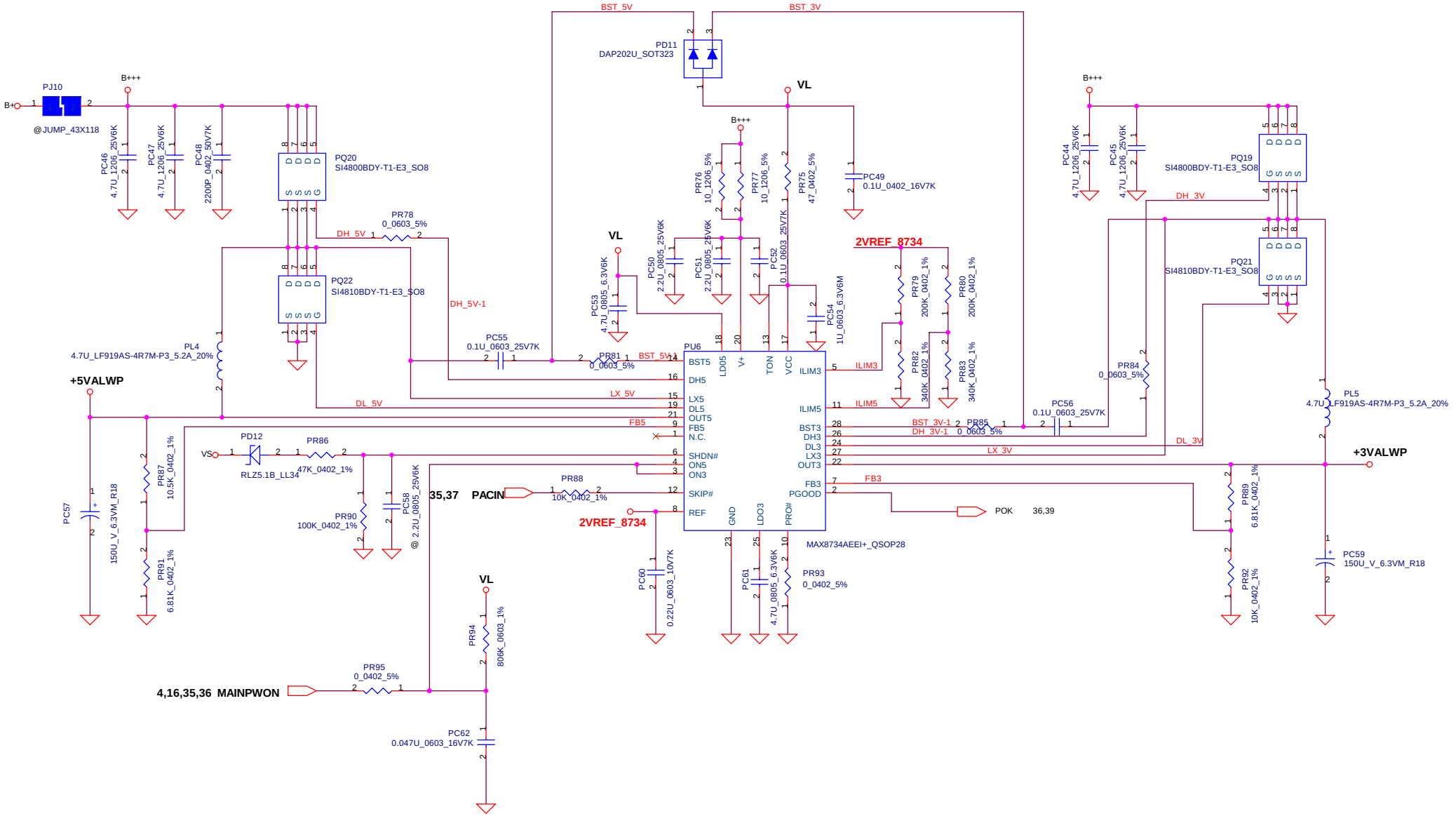

Security Classification	Compal Secret Data		
Issued Date	2005/06/23	Deciphered Date	2006/10/22

THIS SHEET OF ENGINEERING DRAWING IS THE PROPRIETARY PROPERTY OF COMPAL ELECTRONICS, INC. AND CONTAINS CONFIDENTIAL AND TRADE SECRET INFORMATION. THIS SHEET MAY NOT BE TRANSFERED FROM THE CUSTODY OF THE COMPETENT DIVISION OF R&D DEPARTMENT EXCEPT AS AUTHORIZED BY COMPAL ELECTRONICS, INC. NEITHER THIS SHEET NOR THE INFORMATION IT CONTAINS MAY BE USED BY OR DISCLOSED TO ANY THIRD PARTY WITHOUT PRIOR WRITTEN CONSENT OF COMPAL ELECTRONICS, INC.

Compal Electronics, Inc.

Title: +5V/+3V

Size: Custom | Document Number: HAWAA(LA3141) | Rev: 1.0

Date: Friday, April 21, 2006 | Sheet 38 of 46

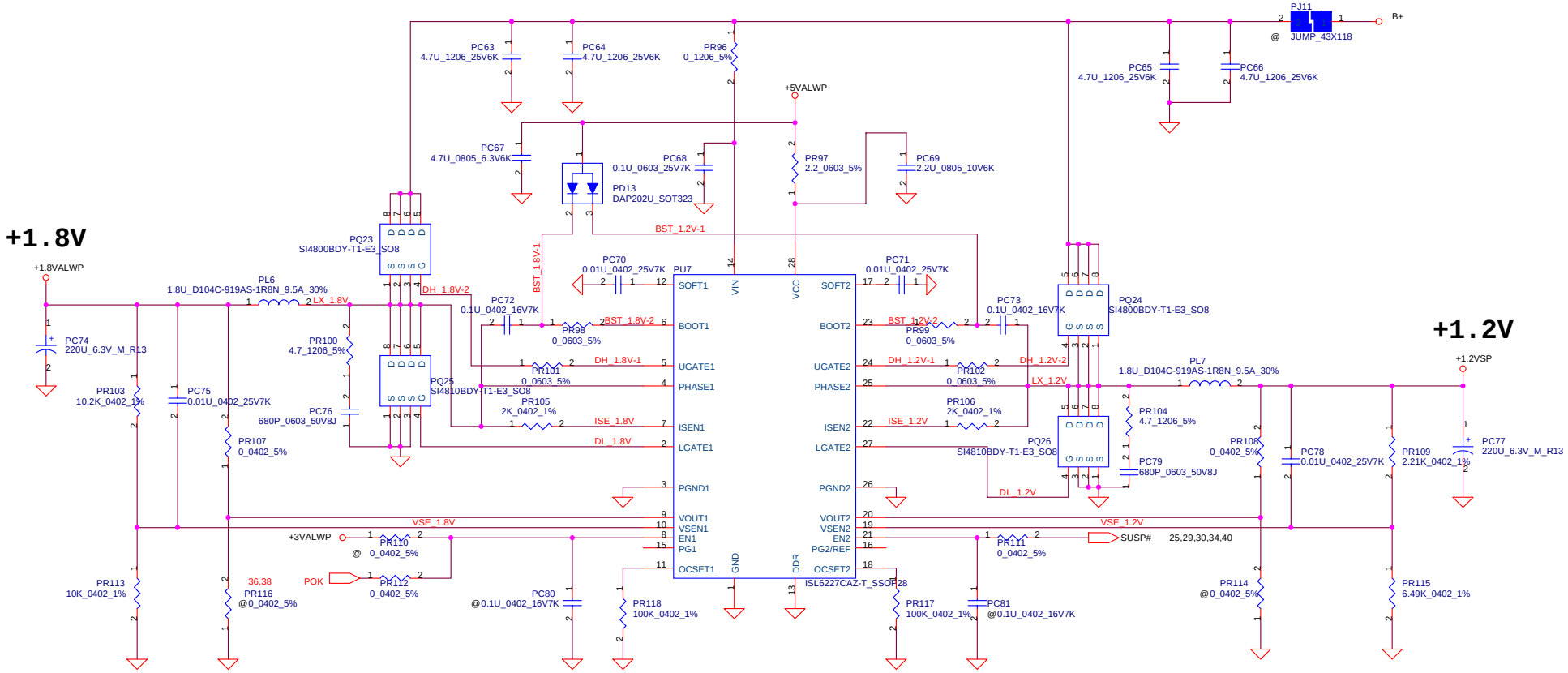

Security Classification	Compal Secret Data		
Issued Date	2005/03/01	Deciphered Date	2006/03/01

THIS SHEET OF ENGINEERING DRAWING IS THE PROPRIETARY PROPERTY OF COMPAL ELECTRONICS, INC. AND CONTAINS CONFIDENTIAL AND TRADE SECRET INFORMATION. THIS SHEET MAY NOT BE TRANSFERED FROM THE CUSTODY OF THE COMPETENT DIVISION OF R&D DEPARTMENT EXCEPT AS AUTHORIZED BY COMPAL ELECTRONICS, INC. NEITHER THIS SHEET NOR THE INFORMATION IT CONTAINS MAY BE USED BY OR DISCLOSED TO ANY THIRD PARTY WITHOUT PRIOR WRITTEN CONSENT OF COMPAL ELECTRONICS, INC.

Compal Electronics, Inc.

Title: 1.8V / 1.2V

Size | Document Number | Rev 1.0

Date: Friday, April 21, 2006 | Sheet 39 of 46

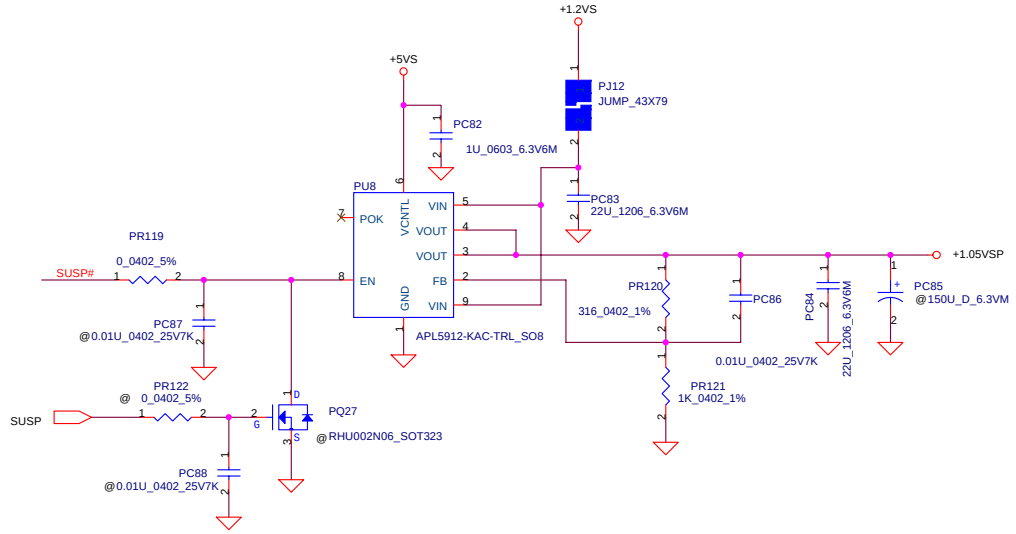

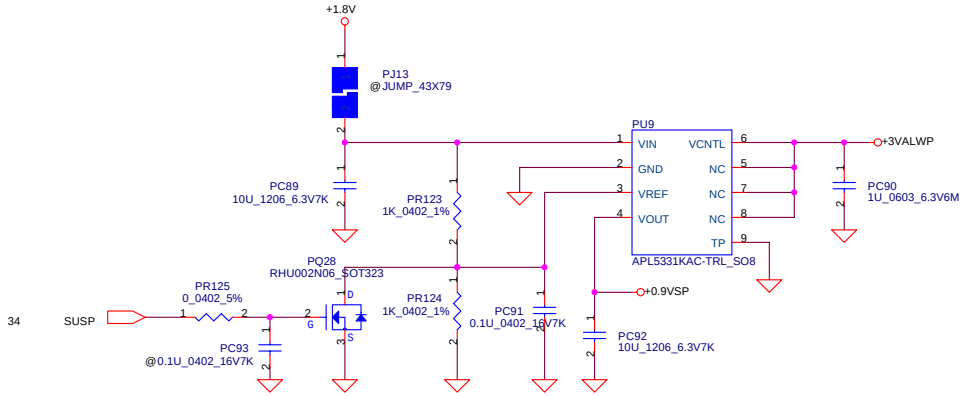

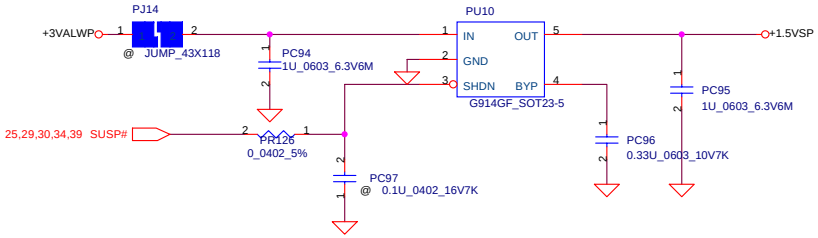

Security Classification	Compal Secret Data		
Issued Date	2005/03/01	Deciphered Date	2006/03/01

THIS SHEET OF ENGINEERING DRAWING IS THE PROPRIETARY PROPERTY OF COMPAL ELECTRONICS, INC. AND CONTAINS CONFIDENTIAL AND TRADE SECRET INFORMATION. THIS SHEET MAY NOT BE TRANSFERED FROM THE CUSTODY OF THE COMPETENT DIVISION OF R&D DEPARTMENT EXCEPT AS AUTHORIZED BY COMPAL ELECTRONICS, INC. NEITHER THIS SHEET NOR THE INFORMATION IT CONTAINS MAY BE USED BY OR DISCLOSED TO ANY THIRD PARTY WITHOUT PRIOR WRITTEN CONSENT OF COMPAL ELECTRONICS, INC.

Compal Electronics, Inc.

Title: 1.05V / 0.9V / 1.5V

Size | Document Number | Rev 1.0

Date: Friday, April 21, 2006 | Sheet 40 of 46

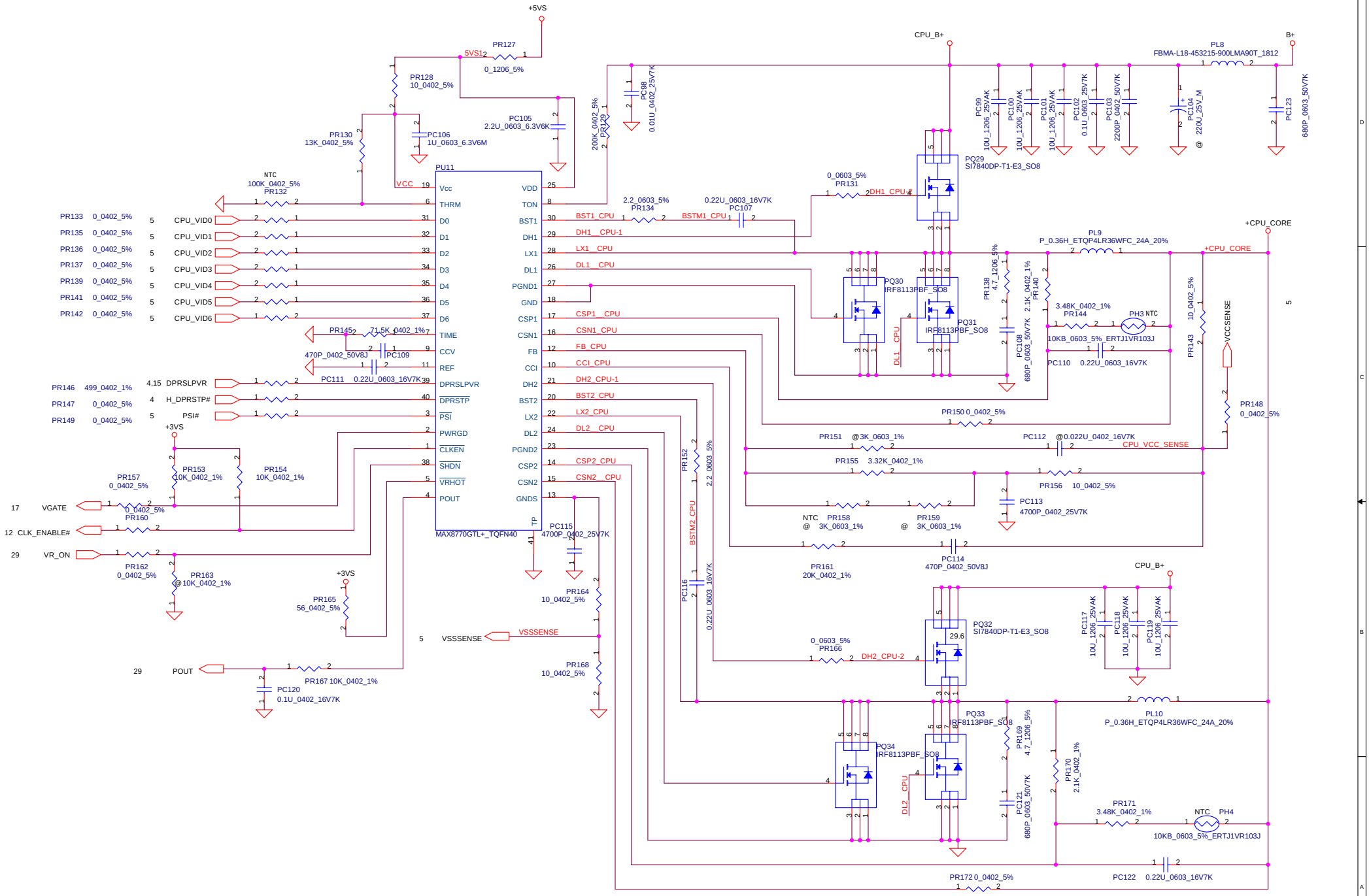

Security Classification	Compal Secret Data		
Issued Date	2005/06/20	Deciphered Date	2006/06/20

THIS SHEET OF ENGINEERING DRAWING IS THE PROPRIETARY PROPERTY OF COMPAL ELECTRONICS, INC. AND CONTAINS CONFIDENTIAL AND TRADE SECRET INFORMATION. THIS SHEET MAY NOT BE TRANSFERED FROM THE CUSTODY OF THE COMPETENT DIVISION OF R&D DEPARTMENT EXCEPT AS AUTHORIZED BY COMPAL ELECTRONICS, INC. NEITHER THIS SHEET NOR THE INFORMATION IT CONTAINS MAY BE USED BY OR DISCLOSED TO ANY THIRD PARTY WITHOUT PRIOR WRITTEN CONSENT OF COMPAL ELECTRONICS, INC.

Compal Electronics, Inc.

Title: **+CPU_CORE**

Size	Document Number	Rev
Custom		1.0

Date: Friday, April 21, 2006 | Sheet 41 of 46

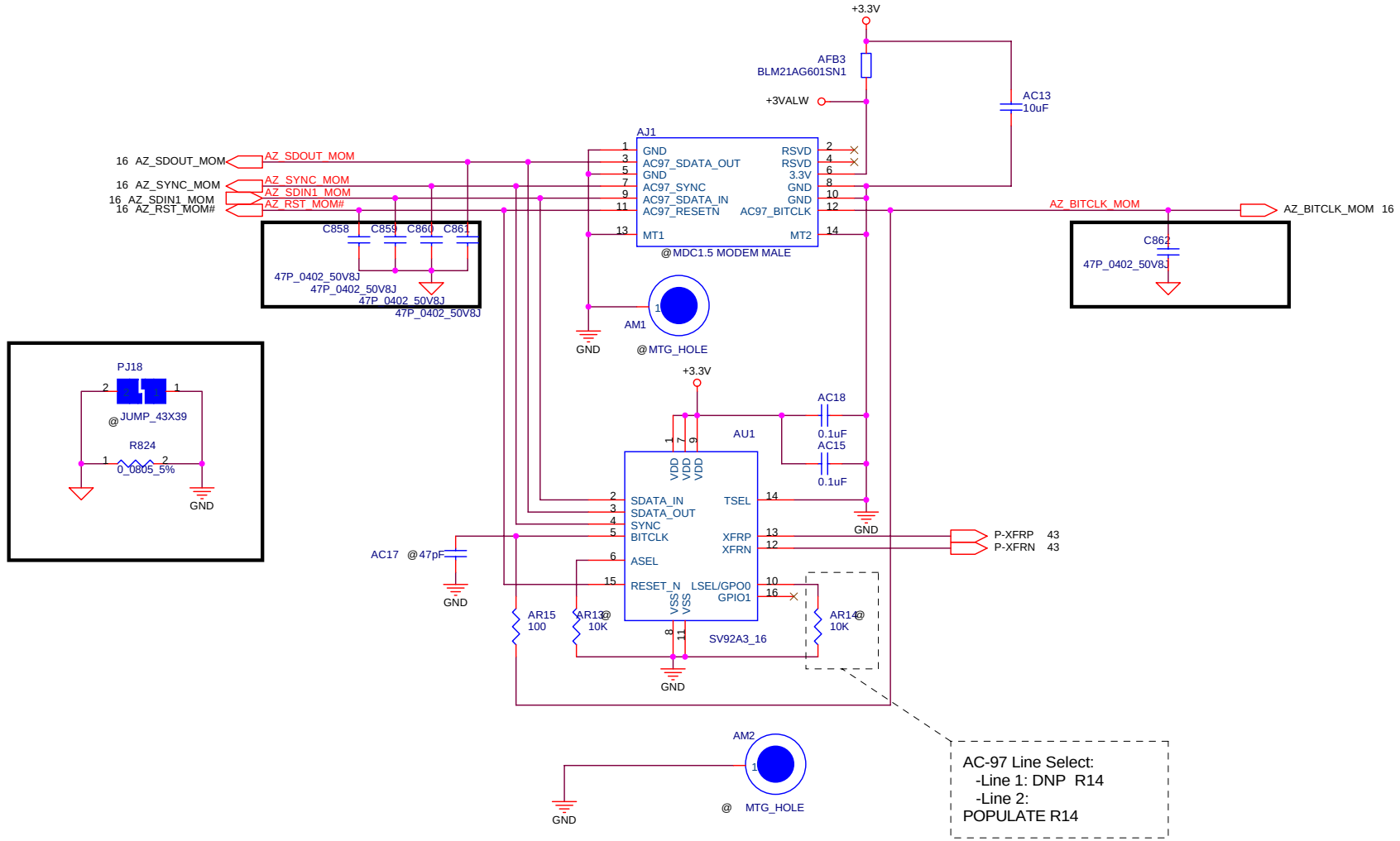

Compal Electronics, Inc.
123

Design Engineer: C. Russo

Title
DELPHI SV92A3 MDC 1.5 Reference Design

Size	Document Number	Rev
B	**HTW2E(LA-3201P)**	1.0

Date: Friday, April 28, 2006 Sheet 42 of 46

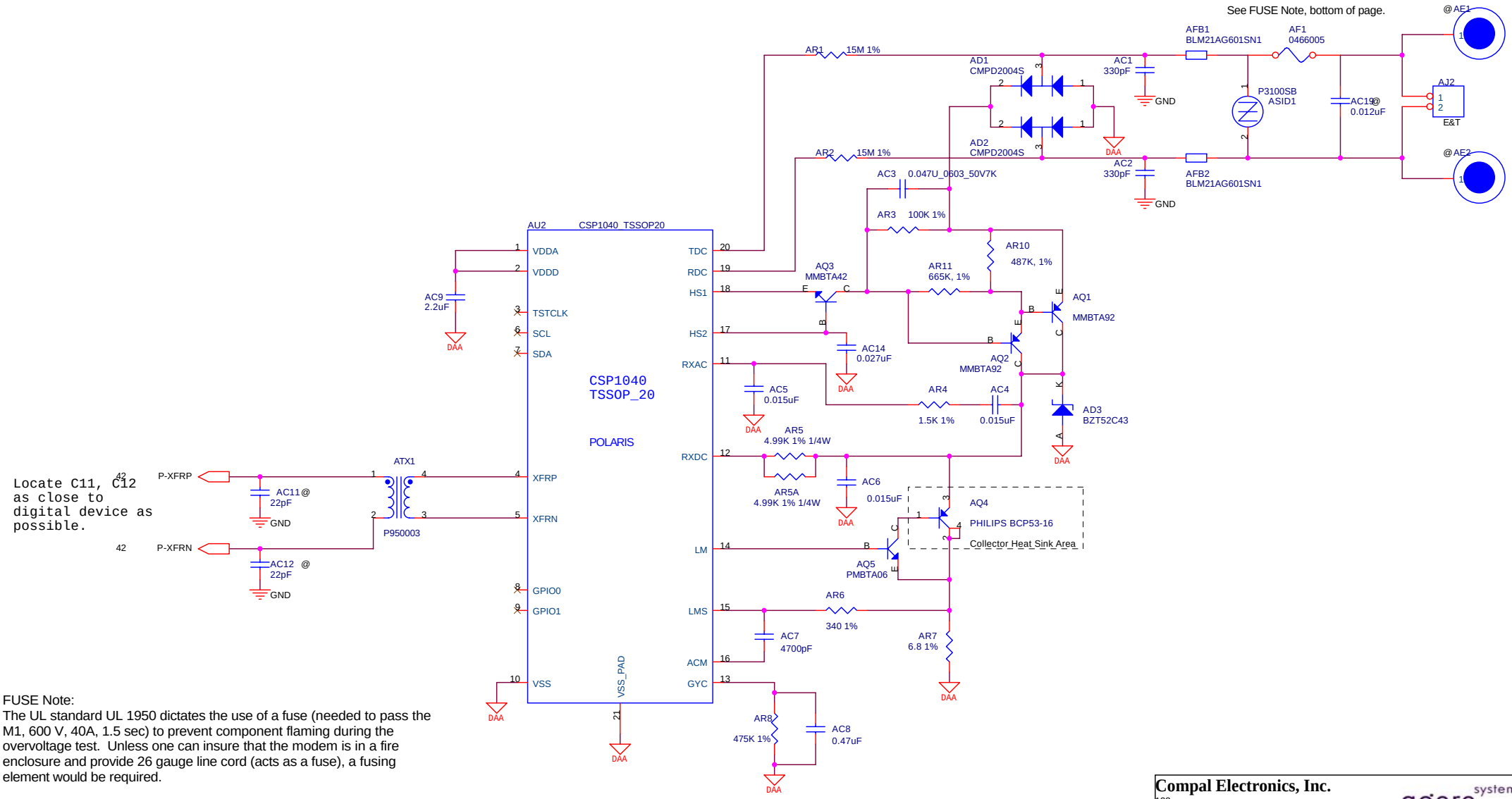

FUSE Note:
The UL standard UL 1950 dictates the use of a fuse (needed to pass the M1, 600 V, 40A, 1.5 sec) to prevent component flaming during the overvoltage test. Unless one can insure that the modem is in a fire enclosure and provide 26 gauge line cord (acts as a fuse), a fusing element would be required.

Alternatively, if a TNV-1 flame resistant material is used, either as a wrap or cover over the DAA portion of the modem, this could satisfy both overvoltage protection and the separation requirement also contained in UL 1950. This latter requirement provides isolation such that unearthed parts of the DAA cannot be touched by a test finger or test probe.

Compal Electronics, Inc.
123
agere systems

Design Engineer: R. Trevino

Title
DELPHI SV92A3 MDC 1.5 Reference Design

Size	Document Number	Rev
B	**HTW2E(LA-3201P)**	1.0

Date: Friday, April 28, 2006 Sheet 43 of 46

HW4 Product Improvement Record (P.I.R.)

Phase: A to B		Date: 2006/01/04			Writer: Timo Teng		
Page#	Action Plan (add; del; change)	Location or Net_List	Before value (Attached file)	After value (Attached file)	Detail Discretion and Root Cause	Rev.	DL/DM Check
12	Modify	R266 R252			For avoid 14M CLK reflection	0.2	
13	Add	C808..C811		220P_0402	For EMI request	0.2	
13	Change	R57 R59	75_0603_1%	75_0402_1%	BOM item reducing	0.2	
14	Change	R1 R2 R3	75_0603_1%	75_0402_1%	BOM item reducing	0.2	
15	Modify	PCICLK Circuit		Mount U32 and relation circuits	For EMI request	0.2	
17	Add	C812		10U_0805	For BOM reducing	0.2	
24	Delete	R754	0_0402_5%		Mount Diode	0.2	
26	Add	R777		100K_0402_5%	Add pull high resistor on NBA_PLUG	0.2	
29	Change		0_0402_5%	8.2K_0402_5%	Change Board ID from 0 to 1	0.2	
30	Delete	R177	0_0402_5%		No using	0.2	
9	Change	C29	22U_1206	22U_0805	BOM Reducing	0.2	
10	Change	C176 C177	22U_1206	22U_0805	BOM Reducing	0.2	
26	Change	C356	22U_1206	22U_0805	BOM Reducing	0.2	
30	Add	C813 C814		220P_0402	For EMI request	0.2	
25	Change	C632 C383	0.1u_0402	680P_0402	For EMI request	0.2	
33	Add	Debug Card Circuit			For Debug	0.2	
16	Modify	GPIO8, 40, 46 pull down		10K_0402	For ATI suggestion.	0.2	
25	Add	R788 R785 Q59 R786 C819			For microphone sense of HD codec	0.2	
26	Add	Gain setting circuit			For adjusting the gain of amplifier by EC	0.2	
31	Add	C820~C830		100P_0402	For EMI debug	0.2	
26	Add	R797 to R801 Q60 Q61			For Gain adjusting	0.2	
Phase: B to C		**Date: 2006/02/28**			**Writer: Timo Teng**		
12	Add	C813		@33P_0402	For ATI PA recommendation	0.3	
12	Add	Q62 U36 R802 C832 C833 D42		2N7002, 7400, 200K 0.1U, 330P, CH751	For ATI PA recommendation	0.3	
26	Change	R800	3.3K_0603	3.3K_0402	Change the size of resistor	0.3	
29	Change	R101	8.2K_0402	18K_0402_5%	Change Board ID for 02 to 03	0.3	
20	Delete	Q31 Q1	DTA114YKA		Meet the reltek reference circuit	0.3	
24	Add	R446 R447 D443 SW7			Add Kill switch circuit and W/L LED circuit from sub board.	0.3	
25	Add	U37 relation circuit		MAX4411 and relation circuits	Meet the VISTA standard design	0.3	
26	Add	U15 JP34 JP35 SW8 relation circuits	TPA0232	APA2068 HP and Mic Jack VR relation circuits	Move the audio board circuit to M/B	0.3	

Security Classification	Compal Secret Data			Compal Electronics, Inc.
Issued Date	2005/11/01	Deciphered Date	2006/11/01	Title: PIR
				Size: Document Number: Rev 1.0
				Date: Friday, April 21, 2006 Sheet 44 of 46

THIS SHEET OF ENGINEERING DRAWING IS THE PROPRIETARY PROPERTY OF COMPAL ELECTRONICS, INC. AND CONTAINS CONFIDENTIAL AND TRADE SECRET INFORMATION. THIS SHEET MAY NOT BE TRANSFERED FROM THE CUSTODY OF THE COMPETENT DIVISION OF R&D DEPARTMENT EXCEPT AS AUTHORIZED BY COMPAL ELECTRONICS, INC. NEITHER THIS SHEET NOR THE INFORMATION IT CONTAINS MAY BE USED BY OR DISCLOSED TO ANY THIRD PARTY WITHOUT PRIOR WRITTEN CONSENT OF COMPAL ELECTRONICS, INC.

HW4 Product Improvement Record (P.I.R.)

Phase: C to PreMP			Date: 2006/04/18		Writer: Timo Teng		
Page#	Action Plan (add; del; change)	Location or Net_List	Before value (Attached file)	After value (Attached file)	Detail Discretion and Root Cause	Rev.	DL/DM Check
26	ADD	PJ15 PJ16		JUMP	FOR EMI REQUEST	1.0	
33	ADD	R823 C857		0 ohm and 22p	FOR EMI REQUEST	1.0	
28	ADD	CLP1 CLP2		CLIP	FOR EMI REQUEST	1.0	
42	ADD	R824, C858~C862		0 ohm and 47P	FOR EMI REQUEST	1.0	
28	ADD	PJ17		JUMP	FOR EMI REQUEST	1.0	
42	ADD	PJ18		JUMP	FOR EMI REQUEST	1.0	
25	ADD	R825, C863		0 ohm and 22p	FOR EMI REQUEST	1.0	
6	Modify	C713, C715	@330U	330U	FOR ESD Solution	1.0	
16	Modify	R714, R717	33_0402	47_0402	FOR EMI REQUEST		

THIS SHEET OF ENGINEERING DRAWING IS THE PROPRIETARY PROPERTY OF COMPAL ELECTRONICS, INC. AND CONTAINS CONFIDENTIAL AND TRADE SECRET INFORMATION. THIS SHEET MAY NOT BE TRANSFERED FROM THE CUSTODY OF THE COMPETENT DIVISION OF R&D DEPARTMENT EXCEPT AS AUTHORIZED BY COMPAL ELECTRONICS, INC. NEITHER THIS SHEET NOR THE INFORMATION IT CONTAINS MAY BE USED BY OR DISCLOSED TO ANY THIRD PARTY WITHOUT PRIOR WRITTEN CONSENT OF COMPAL ELECTRONICS, INC.

POWER PIR LIST

page	Reason for change	Modify list
39	Increase 1.8VALWP to 1.82V for HW requirement	Change PR103 from 10K_0402_1% to 10.2K_0402_1%
41	Add 680P at B+ near CPU core for EMI requirement	Add PC123(680P_0603_50V) at B+ near CPU CORE
38	Adjust 3V/5V OCP to 8A	Change PR79,PR80 to 200K_0402_1%, PR82,PR83 to 340K_0402_1%, PL4,PL5 to 4.7uH
41	Adjust CPU CORE loadline	Change PR155 to 3.32K_0402_1%, PR156,PR164=10_0402_5%, PC115=4700P_0402_25V,PR148=0_0402_5%, Unpop PR151,PC112

Security Classification	Compal Secret Data		
Issued Date	2005/11/01	Deciphered Date	2006/11/01

THIS SHEET OF ENGINEERING DRAWING IS THE PROPRIETARY PROPERTY OF COMPAL ELECTRONICS, INC. AND CONTAINS CONFIDENTIAL AND TRADE SECRET INFORMATION. THIS SHEET MAY NOT BE TRANSFERED FROM THE CUSTODY OF THE COMPETENT DIVISION OF R&D DEPARTMENT EXCEPT AS AUTHORIZED BY COMPAL ELECTRONICS, INC. NEITHER THIS SHEET NOR THE INFORMATION IT CONTAINS MAY BE USED BY OR DISCLOSED TO ANY THIRD PARTY WITHOUT PRIOR WRITTEN CONSENT OF COMPAL ELECTRONICS, INC.

Compal Electronics, Inc.

Title: POWER PIR

Size | Document Number | Rev 1.0

Date: Friday, April 21, 2006 | Sheet 46 of 46

www.s-manuals.com