MODEL NAME : *PAR00*

PCB NO : *LA-6601P (DAA00002000)*

BOM P/N : *TBD*

Compal Confidential

Voyager

Schematic Document

Rev: 1.0(A00)

2010-11-30

@ : Nopop Component

DELL CONFIDENTIAL/PROPRIETARY

PROPRIETARY NOTE: THIS SHEET OF ENGINEERING DRAWING AND SPECIFICATIONS CONTAINS CONFIDENTIAL TRADE SECRET AND OTHER PROPRIETARY INFORMATION OF DELL INC. ("DELL") THIS DOCUMENT MAY NOT BE TRANSFERRED OR COPIED WITHOUT THE EXPRESS WRITTEN AUTHORIZATION OF DELL. IN ADDITION, NEITHER THIS SHEET NOR THE INFORMATION IT CONTAINS WAY BE USED BY OR DISCLOSED TO ANY THIRD PARTY WITHOUT DELL'S EXPRESS WRITTEN CONSENT.

Compal Electronics, Inc.			
Title: Cover Sheet			
Size	Document Number: LA-6601P		Rev: 1.0
Date: Tuesday, November 30, 2010	Sheet 1 of 63		

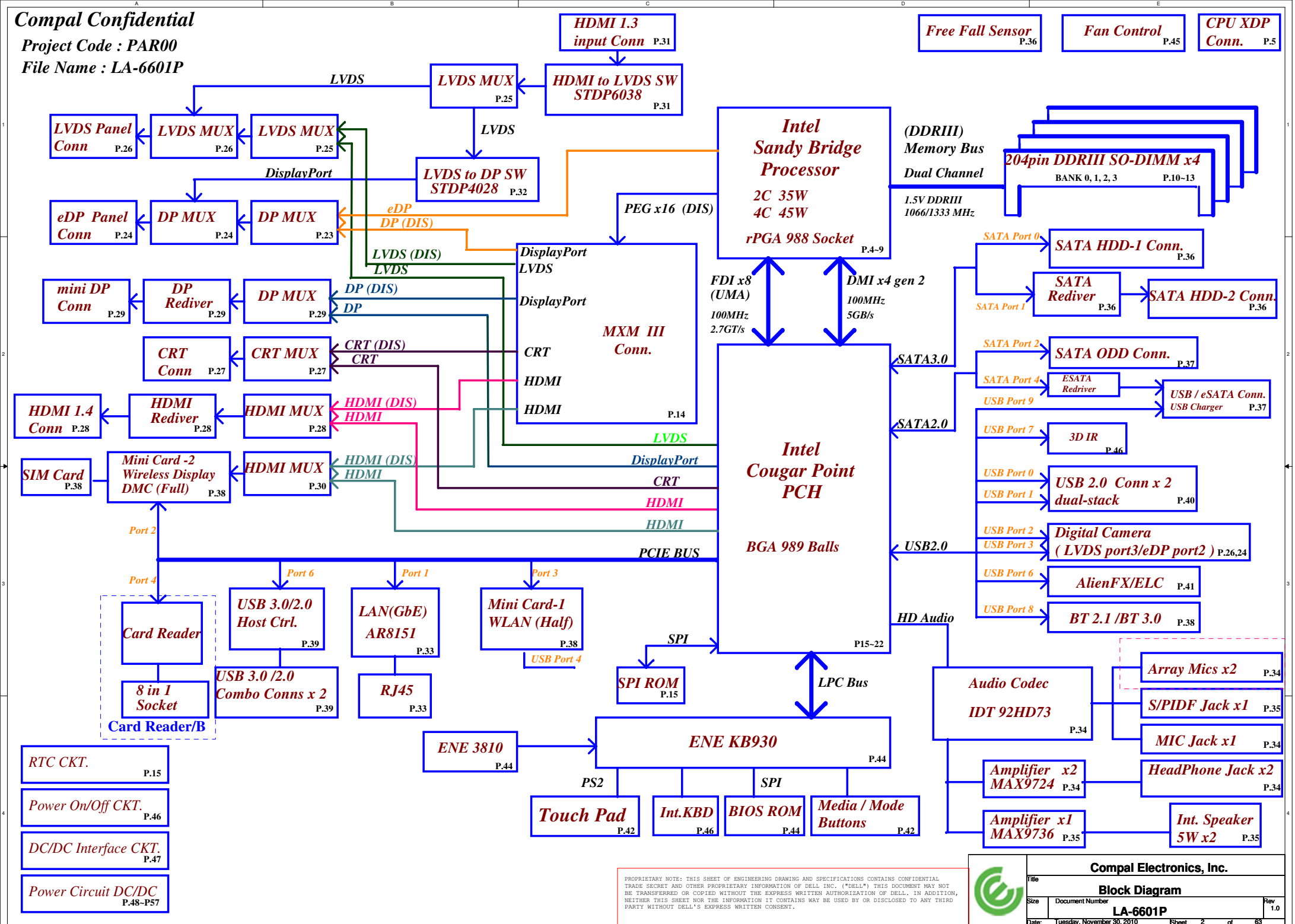
Compal Confidential
Project Code : PAR00
File Name : LA-6601P
HDMI 1.3 input Conn P.31
Free Fall Sensor P.36
Fan Control P.45
CPU XDP Conn. P.5
LVDS
LVDS MUX P.25
HDMI to LVDS SW STDP6038 P.31
LVDS Panel Conn P.26
LVDS MUX P.26
LVDS MUX P.25
LVDS
LVDS to DP SW STDP4028 P.32
DisplayPort
eDP Panel Conn P.24
DP MUX P.24
DP MUX P.23
eDP
DP (DIS)
LVDS (DIS)
LVDS
Intel Sandy Bridge Processor
2C 35W
4C 45W
rPGA 988 Socket P.4~9
(DDRIII) Memory Bus
Dual Channel
1.5V DDRIII 1066/1333 MHz
204pin DDRIII SO-DIMM x4
BANK 0, 1, 2, 3 P.10~13
PEG x16 (DIS)
DisplayPort
LVDS
DisplayPort
MXM III Conn.
CRT
HDMI
HDMI
P.14
mini DP Conn P.29
DP Rediver P.29
DP MUX P.29
DP (DIS)
DP
CRT Conn P.27
CRT MUX P.27
CRT (DIS)
CRT
HDMI 1.4 Conn P.28
HDMI Rediver P.28
HDMI MUX P.28
HDMI (DIS)
HDMI
FDI x8 (UMA)
100MHz
2.7GT/s
DMI x4 gen 2
100MHz
5GB/s
SATA Port 0
SATA HDD-1 Conn. P.36
SATA Port 1
SATA Rediver P.36
SATA HDD-2 Conn. P.36
SATA3.0
SATA Port 2
SATA ODD Conn. P.37
SATA Port 4
ESATA Redriver
USB / eSATA Conn. USB Charger P.37
USB Port 9
SATA2.0
USB Port 7
3D IR P.46
LVDS
DisplayPort
CRT
HDMI
HDMI
Intel Cougar Point PCH
BGA 989 Balls
P15~22
USB Port 0
USB Port 1
USB 2.0 Conn x 2 dual-stack P.40
USB Port 2
USB Port 3
Digital Camera (LVDS port3/eDP port2) P.26,24
USB2.0
USB Port 6
AlienFX/ELC P.41
USB Port 8
BT 2.1 /BT 3.0 P.38
HD Audio
SIM Card P.38
Mini Card -2 Wireless Display DMC (Full) P.38
HDMI MUX P.30
HDMI (DIS)
HDMI
Port 2
PCIE BUS
Port 4
Port 6
Port 1
Port 3
Card Reader
8 in 1 Socket
Card Reader/B
USB 3.0/2.0 Host Ctrl. P.39
USB 3.0 /2.0 Combo Conns x 2 P.39
LAN(GbE) AR8151 P.33
RJ45 P.33
Mini Card-1 WLAN (Half) P.38
USB Port 4
SPI
SPI ROM P.15
LPC Bus
Audio Codec
IDT 92HD73 P.34
Array Mics x2 P.34
S/PIDF Jack x1 P.35
MIC Jack x1 P.34
ENE 3810 P.44
ENE KB930 P.44
PS2
SPI
Touch Pad P.42
Int.KBD P.46
BIOS ROM P.44
Media / Mode Buttons P.42
Amplifier x2 MAX9724 P.34
HeadPhone Jack x2 P.34
Amplifier x1 MAX9736 P.35
Int. Speaker 5W x2 P.35
RTC CKT. P.15
Power On/Off CKT. P.46
DC/DC Interface CKT. P.47
Power Circuit DC/DC P.48~P57
PROPRIETARY NOTE: THIS SHEET OF ENGINEERING DRAWING AND SPECIFICATIONS CONTAINS CONFIDENTIAL TRADE SECRET AND OTHER PROPRIETARY INFORMATION OF DELL INC. ("DELL") THIS DOCUMENT MAY NOT BE TRANSFERRED OR COPIED WITHOUT THE EXPRESS WRITTEN AUTHORIZATION OF DELL. IN ADDITION, NEITHER THIS SHEET NOR THE INFORMATION IT CONTAINS WAY BE USED BY OR DISCLOSED TO ANY THIRD PARTY WITHOUT DELL'S EXPRESS WRITTEN CONSENT.
Compal Electronics, Inc.
Title
Block Diagram
Size
Document Number
LA-6601P
Rev 1.0
Date: Tuesday, November 30, 2010
Sheet 2 of 63

Board ID Table for AD channel

Vcc	3.3V +/- 5%
Ra	100K +/- 5%

Board ID	Rb	V_{AD_BID} min	V_{AD_BID} typ	V_{AD_BID} max	EC AD3
0	0	0 V	0 V	0.155 V	0x00-0x0C
1	8.2K +/- 5%	0.168 V	0.250 V	0.362 V	0x0D-0x1C
2	18K +/- 5%	0.375 V	0.503 V	0.621 V	0x1D-0x30
3	33K +/- 5%	0.634 V	0.819 V	0.945 V	0x31-0x49
4	56K +/- 5%	0.958 V	1.185 V	1.359 V	0x4A-0x69
5	100K +/- 5%	1.372 V	1.650 V	1.838 V	0x6A-0x8E
6	200K +/- 5%	1.851 V	2.200 V	2.420 V	0x8F-0xBB
7	NC	2.433 V	3.300 V	3.300 V	0xBC-0xFF

BOARD ID Table

Board ID	PCB Revision
0	0.1
1	0.2
2	0.3
3	0.4
4	1.0
5	
6	
7	

	USB PORT#	DESTINATION
USB	0	JUSB1
	1	JUSB2
	2	eDP CAMERA
	3	LVDS CAMERA
	4	JMINI1 (WLAN)
	5	JMINI2 (DMC)
	6	AlienFX/ELC
	7	IR SENSOR
	8	Bluetooth
	9	JESATA
	10	None
	11	None
	12	None
	13	None

SMBUS Control Table

	SOURCE	MIINI1	BATT	MINI2	EXPRESS CARD	SODIMM	MXM
EC_SMB_CK1 EC_SMB_DA1	KB930	X	V	X	X	X	V
EC_SMB_CK2 EC_SMB_DA2	KB930	X	X	X	X	X	X
PCH_SMBCLK PCH_SMBDATA	PCH	V	X	V	V	X	X
MEM_SMBCLK MEM_SMBDATA	PCH	X	X	X	X	V	X

CLKOUT	DESTINATION
PCI0	PCH_LOOPBACK
PCI1	EC
PCI2	None
PCI3	None
PCI4	None

	DIFFERENTIAL	DESTINATION	FLEX CLOCKS	DESTINATION
CLK	CLKOUT_PCIE0	None	CLKOUTFLEX0	None
	CLKOUT_PCIE1	10/100/1G LAN	CLKOUTFLEX1	CLK_14M
	CLKOUT_PCIE2	MINI CARD-2 DMC	CLKOUTFLEX2	None
	CLKOUT_PCIE3	MINI CARD-1 WLAN	CLKOUTFLEX3	None
	CLKOUT_PCIE4	CARD READER		
	CLKOUT_PCIE5	None		
	CLKOUT_PCIE6	USB 3.0		
	CLKOUT_PCIE7	None		
	CLKOUT_PEG_A	MXM		

SATA	DESTINATION
SATA0	HDD1
SATA1	HDD2
SATA2	ODD
SATA3	NA
SATA4	ESATA
SATA5	None

PCI EXPRESS	DESTINATION
Lane 1	10/100/1G LAN
Lane 2	MINI CARD-2 DMC
Lane 3	MINI CARD-1 WLAN
Lane 4	CARD READER
Lane 5	None
Lane 6	USB 3.0
Lane 7	None
Lane 8	None

Symbol Note :

: means Digital Ground

: means Analog Ground

DELL CONFIDENTIAL/PROPRIETARY

PROPRIETARY NOTE: THIS SHEET OF ENGINEERING DRAWING AND SPECIFICATIONS CONTAINS CONFIDENTIAL TRADE SECRET AND OTHER PROPRIETARY INFORMATION OF DELL INC. ("DELL") THIS DOCUMENT MAY NOT BE TRANSFERRED OR COPIED WITHOUT THE EXPRESS WRITTEN AUTHORIZATION OF DELL. IN ADDITION, NEITHER THIS SHEET NOR THE INFORMATION IT CONTAINS WAY BE USED BY OR DISCLOSED TO ANY THIRD PARTY WITHOUT DELL'S EXPRESS WRITTEN CONSENT.

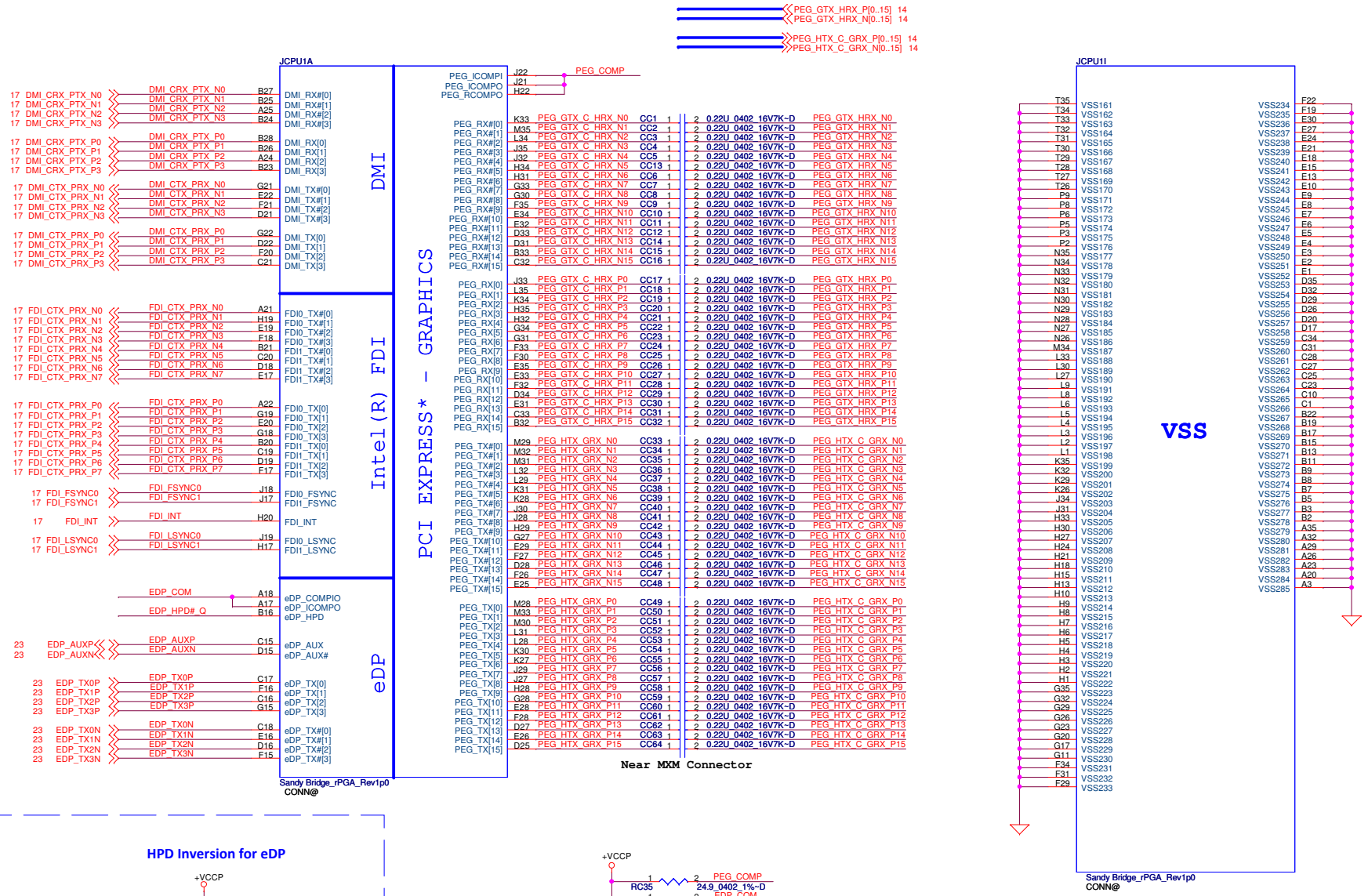

HPD Inversion for eDP

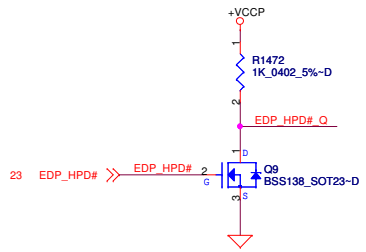

Note: Place pull up resistor within 2 inches of CPU

PEG_ICOMPI and RCOMPO signals should be shorted and routed with - max length = 500 mils - typical impedance = 43 mohms
PEG_ICOMPO signals should be routed with - max length = 500 mils - typical impedance = 14.5 mohms

DELL CONFIDENTIAL/PROPRIETARY

PROPRIETARY NOTE: THIS SHEET OF ENGINEERING DRAWINGS AND SPECIFICATIONS CONTAINS CONFIDENTIAL, TRADE SECRET, AND OTHER PROPRIETARY INFORMATION OF DELL. ("DELL"). THIS DOCUMENT MAY NOT BE TRANSFERRED OR COPIED WITHOUT THE EXPRESS WRITTEN AUTHORIZATION OF DELL. IN ADDITION, NEITHER THIS SHEET NOR THE INFORMATION IT CONTAINS MAY BE USED BY OR DISCLOSED TO ANY THIRD PARTY WITHOUT DELL'S EXPRESS WRITTEN CONSENT.

Compal Electronics, Inc.

Title: PROCESSOR(1/6) DMI,FDI,PEG

Size | Document Number: LA-6601P | Rev 1.0

Date: Tuesday, November 30, 2010 | Sheet 4 of 63

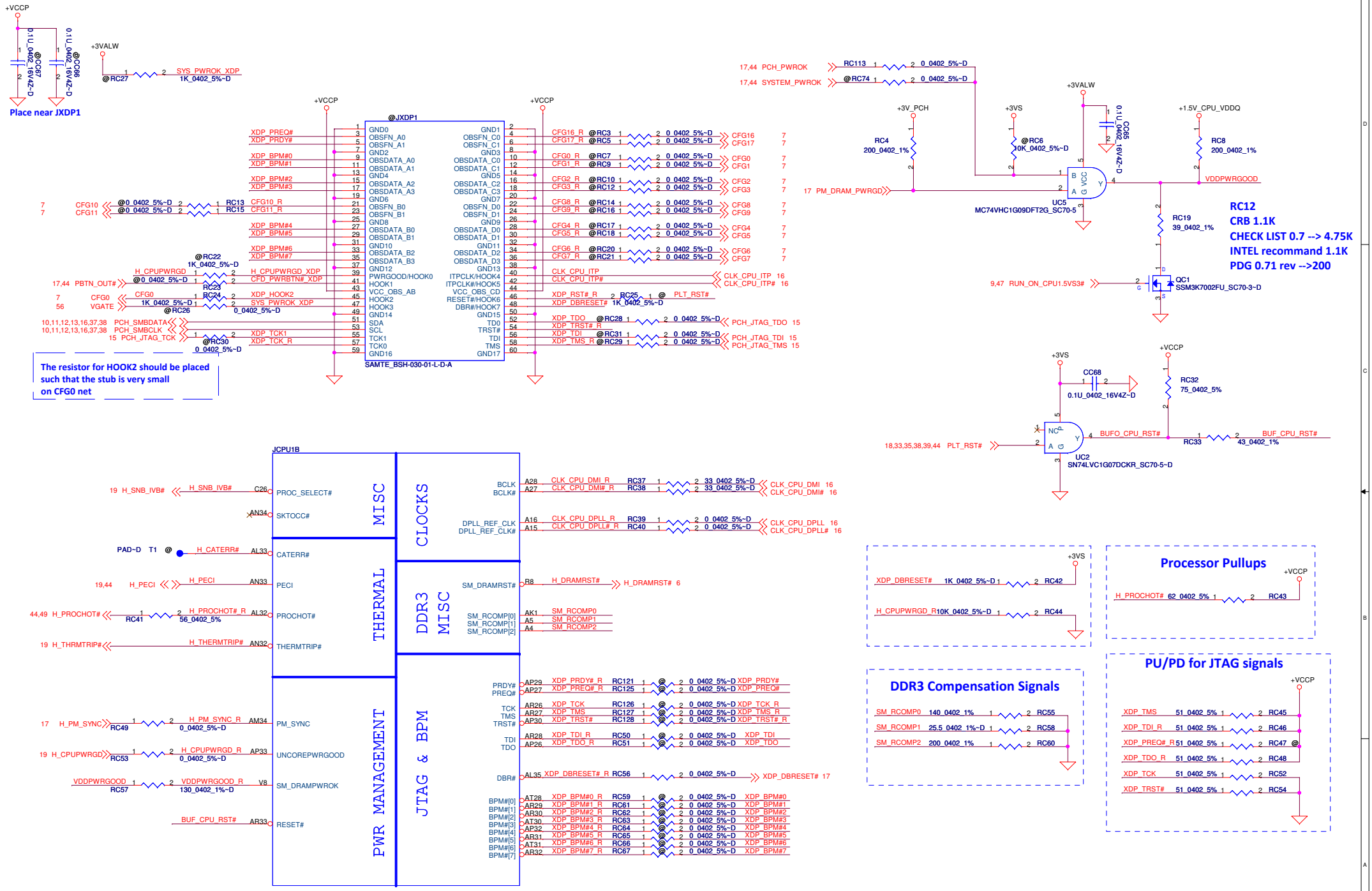

DELL CONFIDENTIAL/PROPRIETARY

PROPRIETARY NOTE: THIS SHEET OF ENGINEERING DRAWINGS AND SPECIFICATIONS CONTAINS CONFIDENTIAL, TRADE SECRET, AND OTHER PROPRIETARY INFORMATION OF DELL. ("DELL"). THIS DOCUMENT MAY NOT BE TRANSFERRED OR COPIED WITHOUT THE EXPRESS WRITTEN AUTHORIZATION OF DELL. IN ADDITION, NEITHER THIS SHEET NOR THE INFORMATION IT CONTAINS MAY BE USED BY OR DISCLOSED TO ANY THIRD PARTY WITHOUT DELL'S EXPRESS WRITTEN CONSENT.

Compal Electronics, Inc.	
Title	PROCESSOR(2/6) PM,XDP,CLK
Size	Document Number: LA-6601P
Rev	1.0
Date: Tuesday, November 30, 2010	Sheet 5 of 63

Need to confired
when Intel spec release.

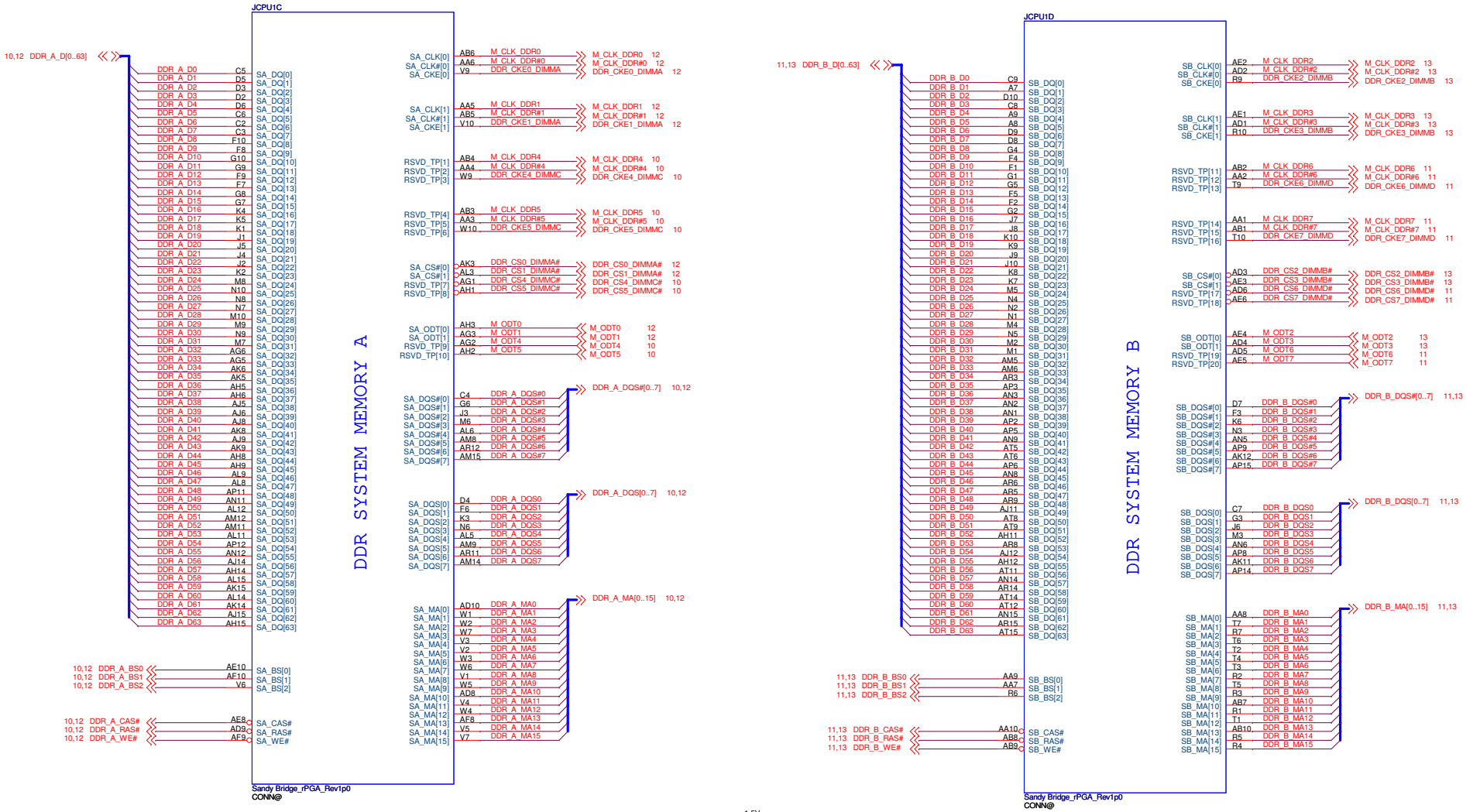

PROPRIETARY NOTE: THIS SHEET OF ENGINEERING DRAWINGS AND SPECIFICATIONS CONTAINS CONFIDENTIAL, TRADE SECRET, AND OTHER PROPRIETARY INFORMATION OF DELL. ("DELL"). THIS DOCUMENT MAY NOT BE TRANSFERRED OR COPIED WITHOUT THE EXPRESS WRITTEN AUTHORIZATION OF DELL. IN ADDITION, NEITHER THIS SHEET NOR THE INFORMATION IT CONTAINS MAY BE USED BY OR DISCLOSED TO ANY THIRD PARTY WITHOUT DELL'S EXPRESS WRITTEN CONSENT.

DELL CONFIDENTIAL/PROPRIETARY

Compal Electronics, Inc.

Title: PROCESSOR(3/6) DDRIII

Size | Document Number: LA-6601P | Rev: 1.0

Date: Tuesday, November 30, 2010 | Sheet 6 of 63

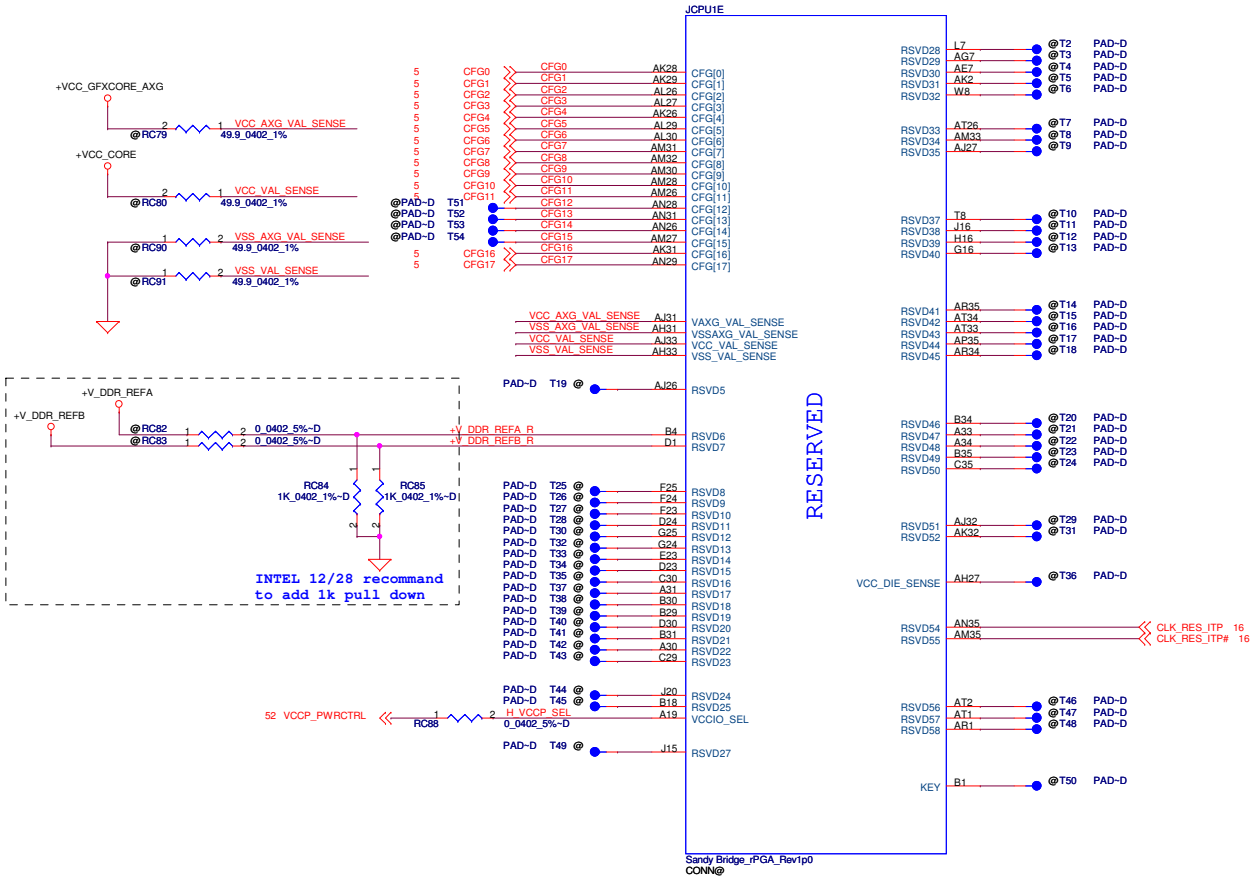

CFG Straps for Processor

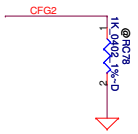

PEG Static Lane Reversal - CFG2 is for the 16x	
CFG2	1:(Default) Normal Operation; Lane # definition matches socket pin map definition 0:Lane Reversed

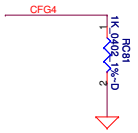

Display Port Presence Strap	
CFG4	1 : Disabled; No Physical Display Port attached to Embedded Display Port 0 : Enabled; An external Display Port device is connected to the Embedded Display Port

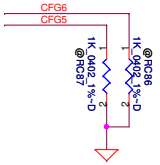

PCIE Port Bifurcation Straps	
CFG[6:5]	11: (Default) x16 - Device 1 functions 1 and 2 disabled 10: x8, x8 - Device 1 function 1 enabled ; function 2 disabled 01: Reserved - (Device 1 function 1 disabled ; function 2 enabled) 00: x8,x4,x4 - Device 1 functions 1 and 2 enabled

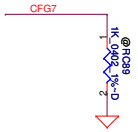

PEG DEFER TRAINING	
CFG7	1: (Default) PEG Train immediately following xxRESETB de assertion 0: PEG Wait for BIOS for training

PROPRIETARY NOTE: THIS SHEET OF ENGINEERING DRAWINGS AND SPECIFICATIONS CONTAINS CONFIDENTIAL, TRADE SECRET, AND OTHER PROPRIETARY INFORMATION OF DELL. ("DELL"). THIS DOCUMENT MAY NOT BE TRANSFERRED OR COPIED WITHOUT THE EXPRESS WRITTEN AUTHORIZATION OF DELL. IN ADDITION, NEITHER THIS SHEET NOR THE INFORMATION IT CONTAINS MAY BE USED BY OR DISCLOSED TO ANY THIRD PARTY WITHOUT DELL'S EXPRESS WRITTEN CONSENT.

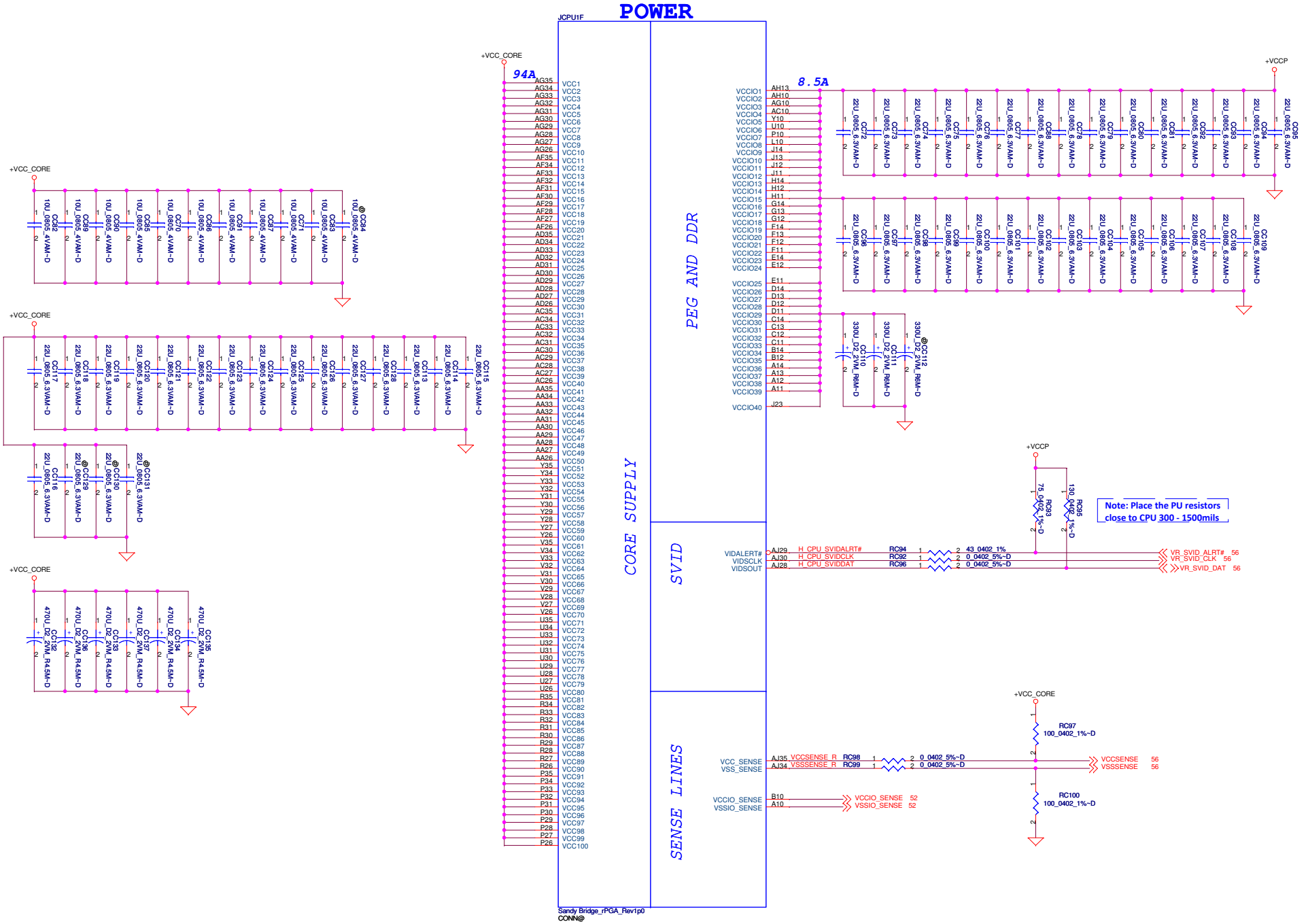

DELL CONFIDENTIAL/PROPRIETARY

PROPRIETARY NOTE: THIS SHEET OF ENGINEERING DRAWINGS AND SPECIFICATIONS CONTAINS CONFIDENTIAL, TRADE SECRET, AND OTHER PROPRIETARY INFORMATION OF DELL. ("DELL"). THIS DOCUMENT MAY NOT BE TRANSFERRED OR COPIED WITHOUT THE EXPRESS WRITTEN AUTHORIZATION OF DELL. IN ADDITION, NEITHER THIS SHEET NOR THE INFORMATION IT CONTAINS MAY BE USED BY OR DISCLOSED TO ANY THIRD PARTY WITHOUT DELL'S EXPRESS WRITTEN CONSENT.

Compal Electronics, Inc.

Title: PROCESSOR(5/6) PWR,BYPASS

Size | Document Number: LA-6601P | Rev 1.0

Date: Tuesday, November 30, 2010 | Sheet 8 of 63

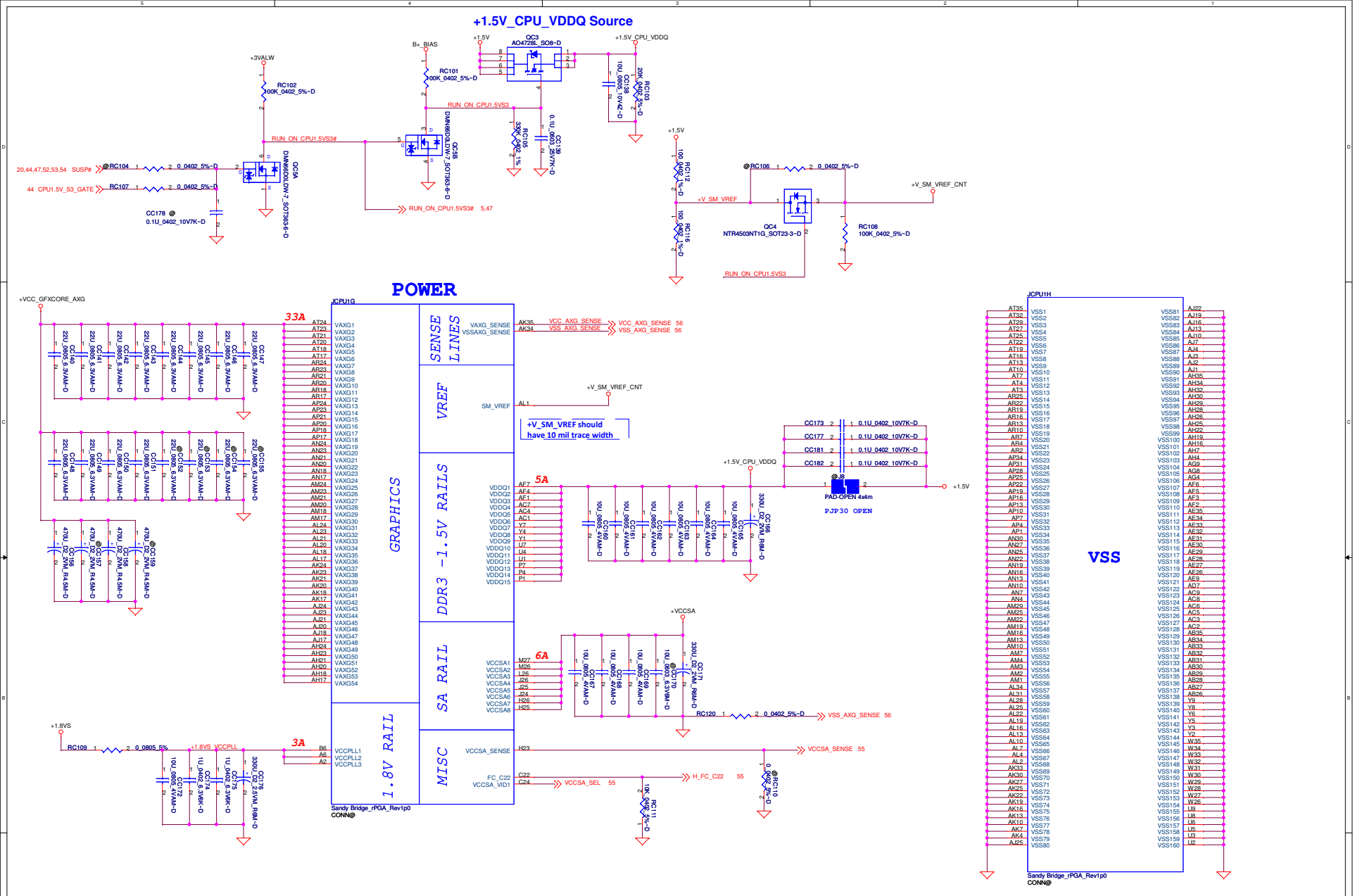

PROPRIETARY NOTE: THIS SHEET OF ENGINEERING DRAWINGS AND SPECIFICATIONS CONTAINS CONFIDENTIAL, TRADE SECRET, AND OTHER PROPRIETARY INFORMATION OF DELL. ("DELL"). THIS DOCUMENT MAY NOT BE TRANSFERRED OR COPIED WITHOUT THE EXPRESS WRITTEN AUTHORIZATION OF DELL. IN ADDITION, NEITHER THIS SHEET NOR THE INFORMATION IT CONTAINS MAY BE USED BY OR DISCLOSED TO ANY THIRD PARTY WITHOUT DELL'S EXPRESS WRITTEN CONSENT.

DELL CONFIDENTIAL/PROPRIETARY

Compal Electronics, Inc.

Title: PROCESSOR(6/6) PWR,VSS

Size: | Document Number: LA-6601P | Rev: 1.0

Date: Tuesday, November 30, 2010 | Sheet 9 of 63

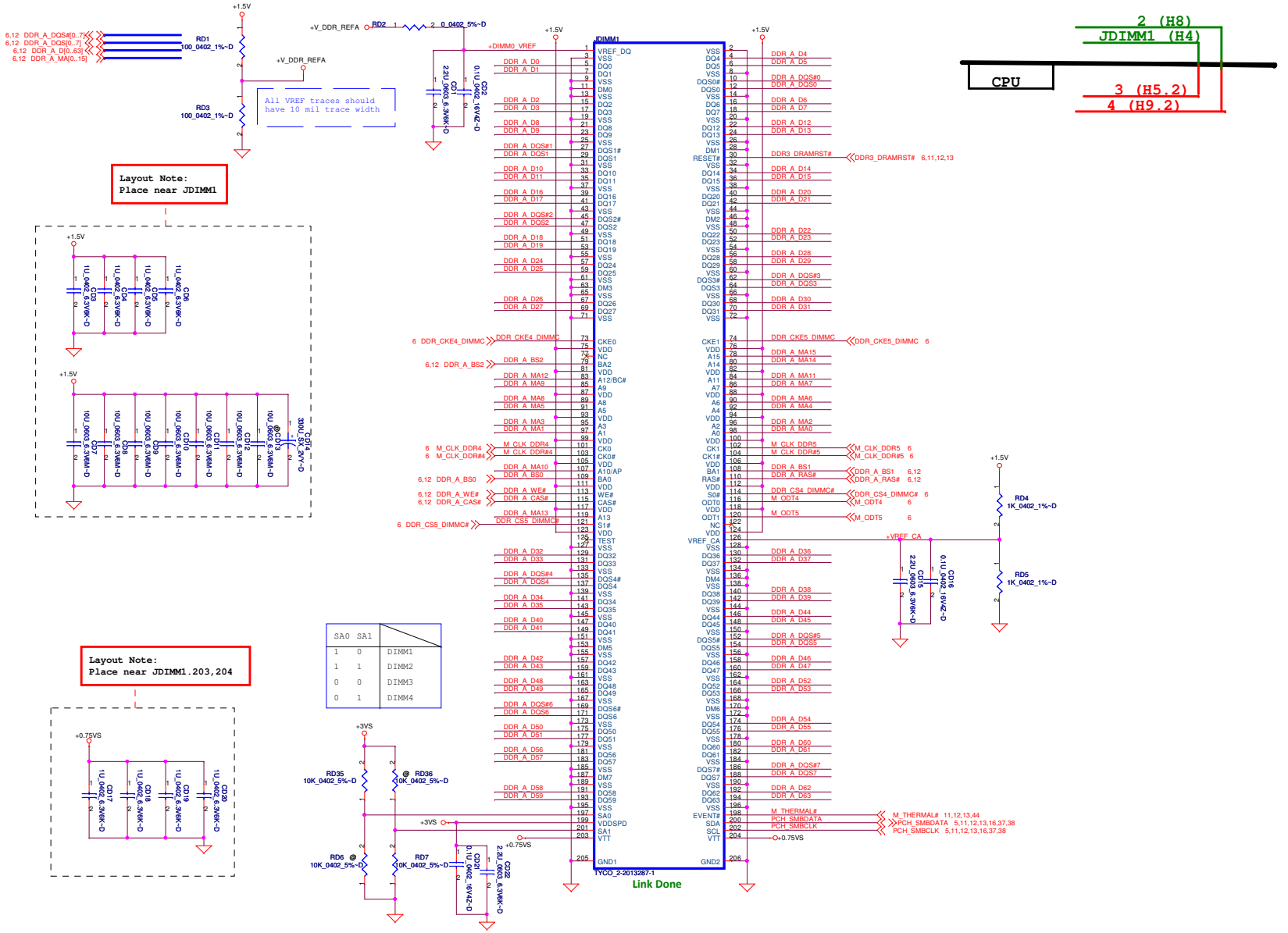

DELL CONFIDENTIAL/PROPRIETARY

PROPRIETARY NOTE: THIS SHEET OF ENGINEERING DRAWINGS AND SPECIFICATIONS CONTAINS CONFIDENTIAL, TRADE SECRET, AND OTHER PROPRIETARY INFORMATION OF DELL. ("DELL"). THIS DOCUMENT MAY NOT BE TRANSFERRED OR COPIED WITHOUT THE EXPRESS WRITTEN AUTHORIZATION OF DELL. IN ADDITION, NEITHER THIS SHEET NOR THE INFORMATION IT CONTAINS MAY BE USED BY OR DISCLOSED TO ANY THIRD PARTY WITHOUT DELL'S EXPRESS WRITTEN CONSENT.

Compal Electronics, Inc.

Title: DDRIII DIMMA

Size: | Document Number: LA-6601P | Rev: 1.0

Date: Tuesday, November 30, 2010 | Sheet 10 of 63

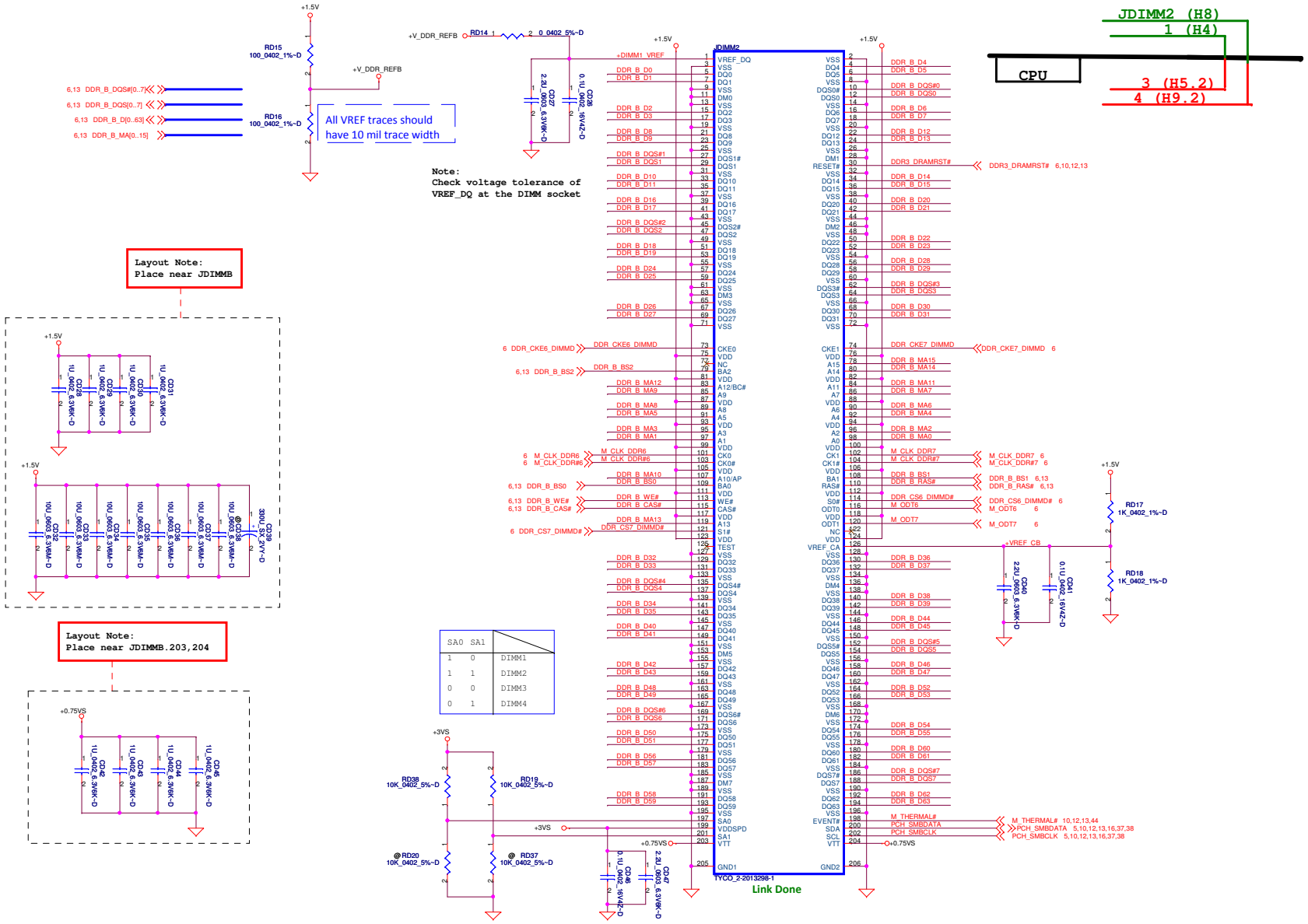

DELL CONFIDENTIAL/PROPRIETARY

PROPRIETARY NOTE: THIS SHEET OF ENGINEERING DRAWINGS AND SPECIFICATIONS CONTAINS CONFIDENTIAL, TRADE SECRET, AND OTHER PROPRIETARY INFORMATION OF DELL. ("DELL"). THIS DOCUMENT MAY NOT BE TRANSFERRED OR COPIED WITHOUT THE EXPRESS WRITTEN AUTHORIZATION OF DELL. IN ADDITION, NEITHER THIS SHEET NOR THE INFORMATION IT CONTAINS MAY BE USED BY OR DISCLOSED TO ANY THIRD PARTY WITHOUT DELL'S EXPRESS WRITTEN CONSENT.

Compal Electronics, Inc.

Title: DDRIII DIMMB

Size: | Document Number: LA-6601P | Rev: 1.0

Date: Tuesday, November 30, 2010 | Sheet 11 of 63

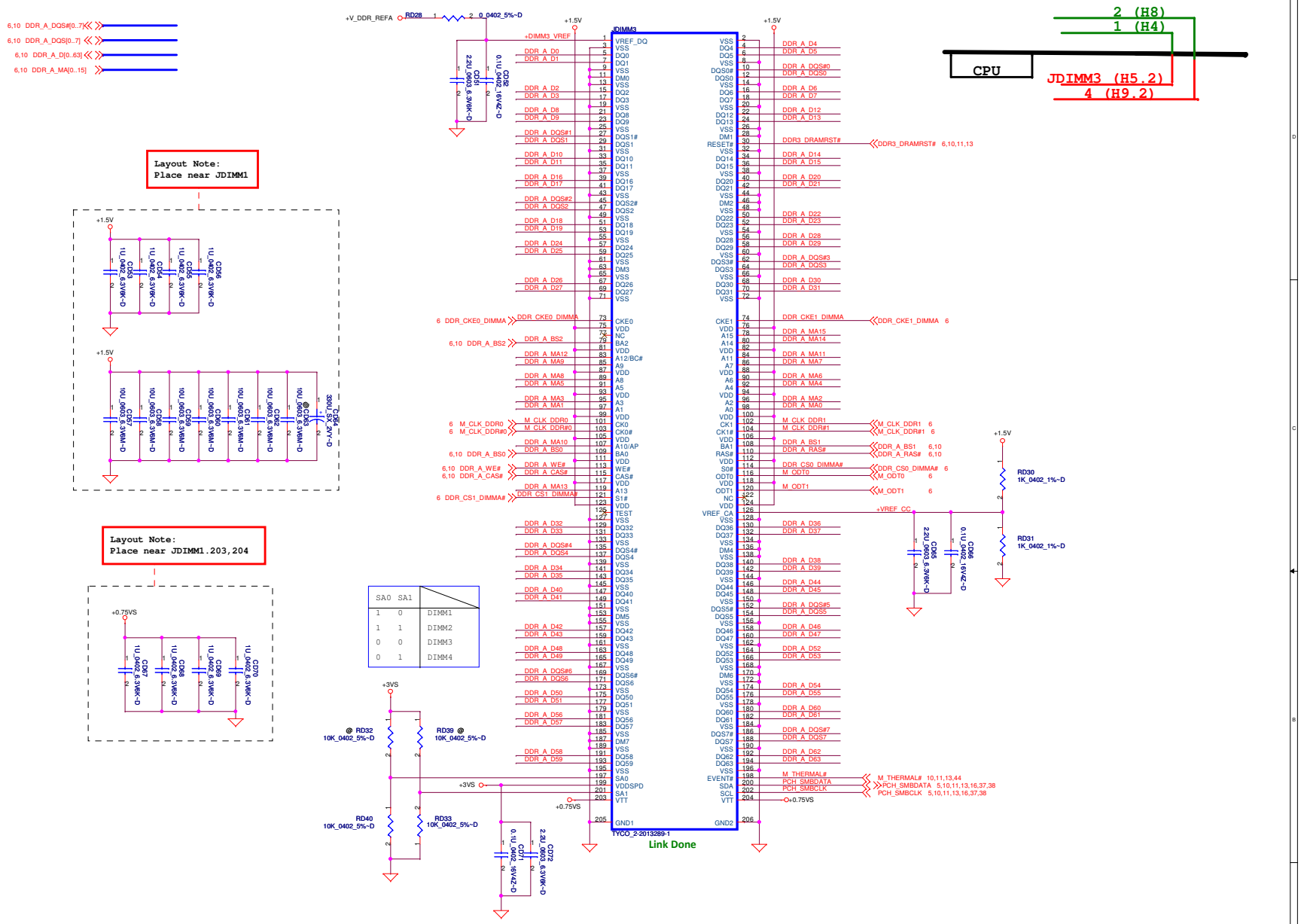

DELL CONFIDENTIAL/PROPRIETARY

PROPRIETARY NOTE: THIS SHEET OF ENGINEERING DRAWINGS AND SPECIFICATIONS CONTAINS CONFIDENTIAL, TRADE SECRET, AND OTHER PROPRIETARY INFORMATION OF DELL. ("DELL"). THIS DOCUMENT MAY NOT BE TRANSFERRED OR COPIED WITHOUT THE EXPRESS WRITTEN AUTHORIZATION OF DELL. IN ADDITION, NEITHER THIS SHEET NOR THE INFORMATION IT CONTAINS MAY BE USED BY OR DISCLOSED TO ANY THIRD PARTY WITHOUT DELL'S EXPRESS WRITTEN CONSENT.

Compal Electronics, Inc.

Title: DDRIII DIMMC

Size: | Document Number: LA-6601P | Rev: 1.0

Date: Tuesday, November 30, 2010 | Sheet 12 of 63

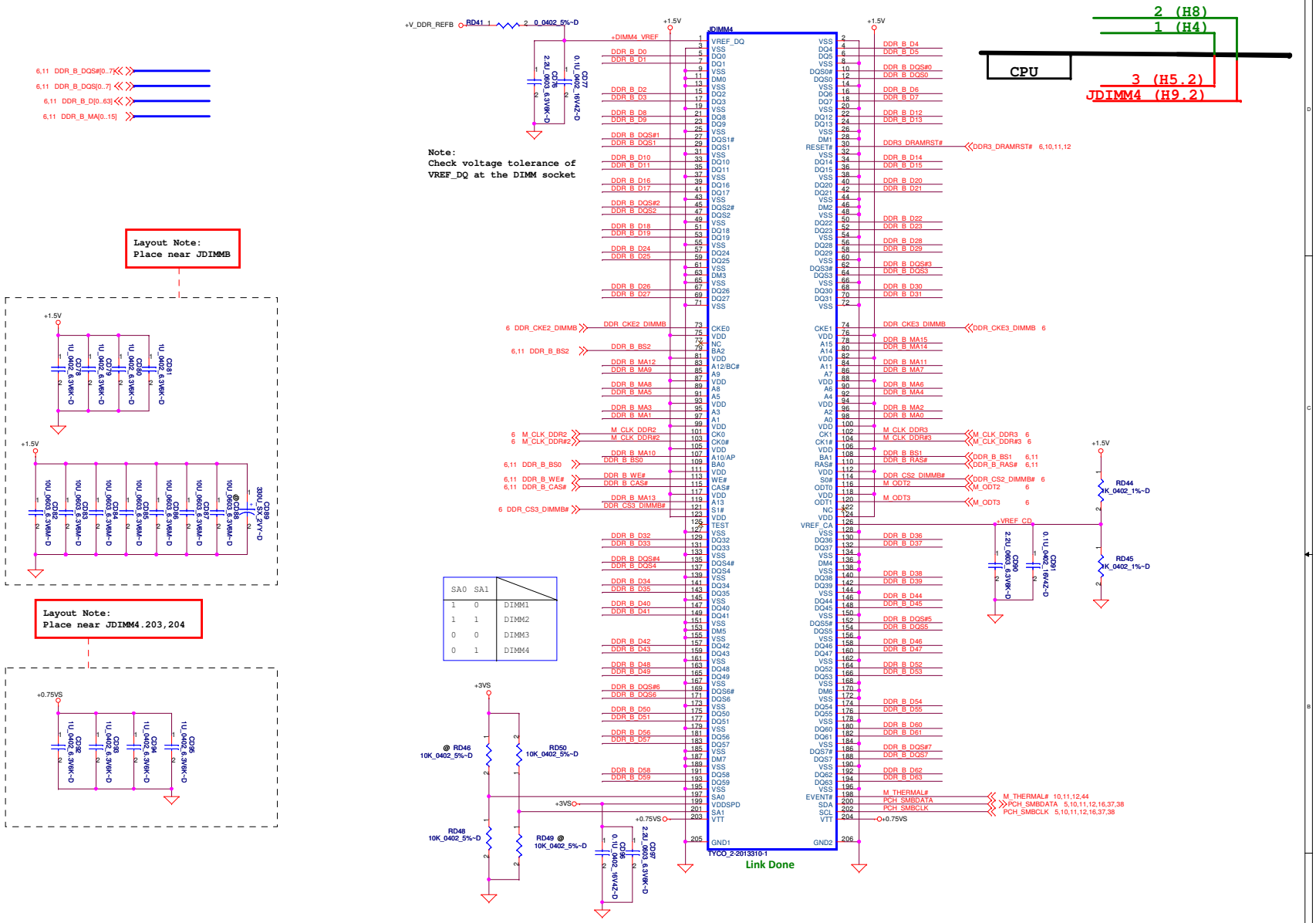

DELL CONFIDENTIAL/PROPRIETARY

PROPRIETARY NOTE: THIS SHEET OF ENGINEERING DRAWINGS AND SPECIFICATIONS CONTAINS CONFIDENTIAL, TRADE SECRET, AND OTHER PROPRIETARY INFORMATION OF DELL. ("DELL"). THIS DOCUMENT MAY NOT BE TRANSFERRED OR COPIED WITHOUT THE EXPRESS WRITTEN AUTHORIZATION OF DELL. IN ADDITION, NEITHER THIS SHEET NOR THE INFORMATION IT CONTAINS MAY BE USED BY OR DISCLOSED TO ANY THIRD PARTY WITHOUT DELL'S EXPRESS WRITTEN CONSENT.

Compal Electronics, Inc.

Title: DDRIII DIMMD

Size: | Document Number: LA-6601P | Rev: 1.0

Date: Tuesday, November 30, 2010 | Sheet 13 of 63

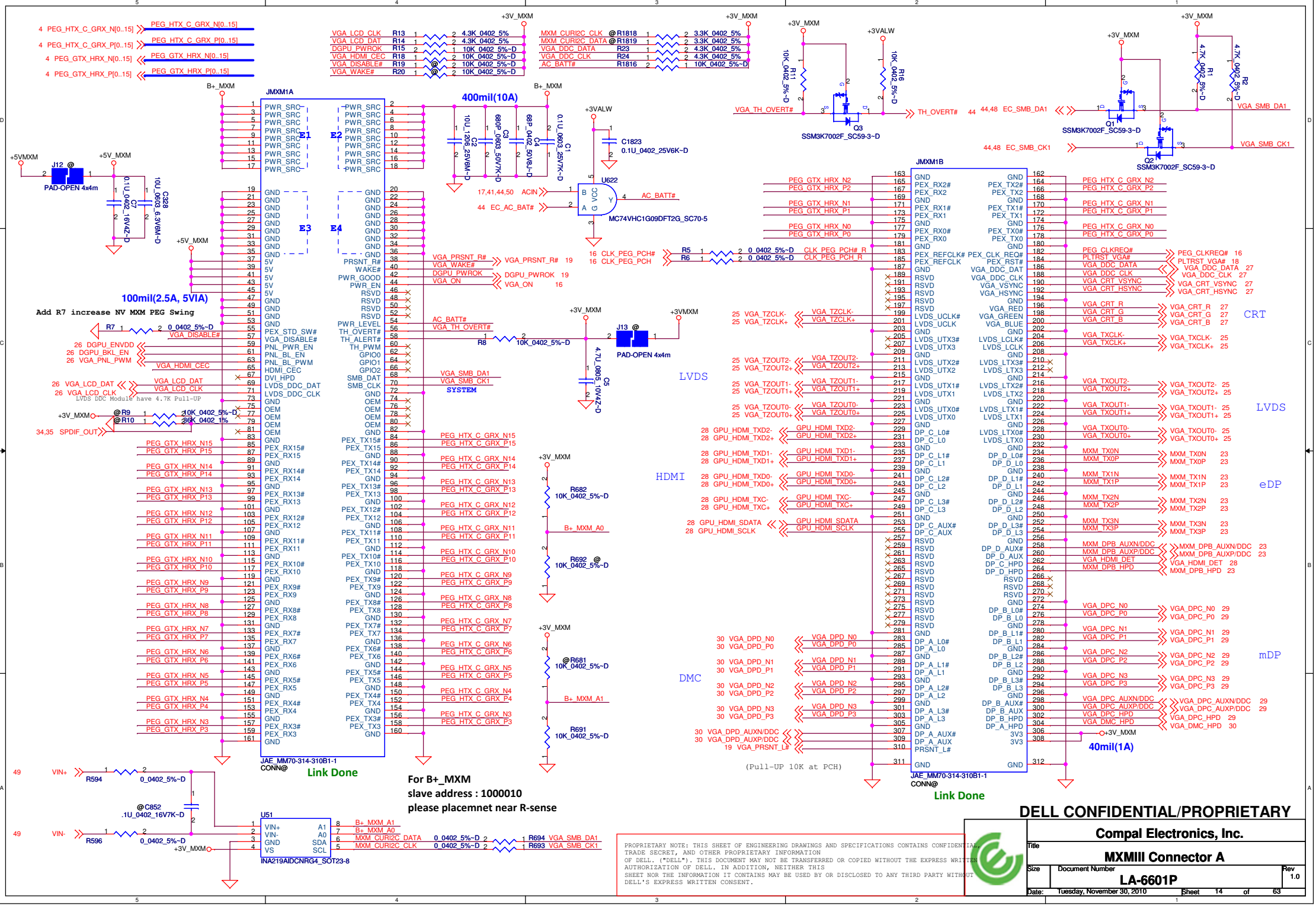
JMXM1A
JMXM1B
JAE_MM70-314-310B1-1
CONN@
Link Done
400mil(10A)
100mil(2.5A, 5VIA)
40mil(1A)
Add R7 increase NV MXM PEG Swing
LVDS DDC Module have 4.7K Pull-UP
For B+_MXM
slave address : 1000010
please placemnet near R-sense
U51
INA219AIDCNRG4_SOT23-8
U622
MC74VHC1G09DFT2G_SC70-5
J12 @
PAD-OPEN 4x4m
J13 @
PAD-OPEN 4x4m
Q1
Q2
Q3
SSM3K7002F_SC59-3~D
CRT
LVDS
eDP
mDP
HDMI
DMC
(Pull-UP 10K at PCH)
DELL CONFIDENTIAL/PROPRIETARY
Compal Electronics, Inc.
Title
MXMIII Connector A
Size
Document Number
LA-6601P
Rev
1.0
Date: Tuesday, November 30, 2010
Sheet 14 of 63

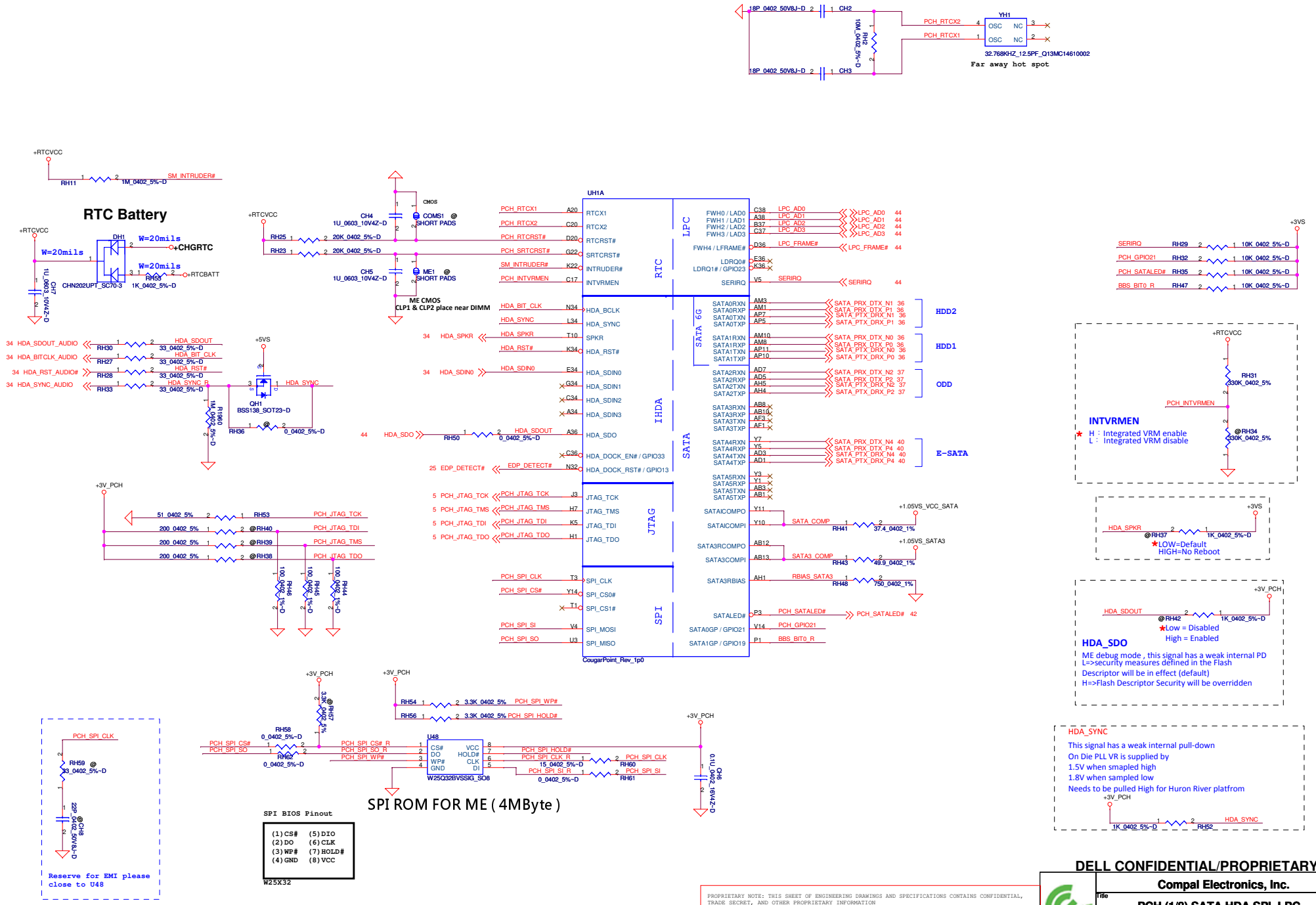

DELL CONFIDENTIAL/PROPRIETARY

PROPRIETARY NOTE: THIS SHEET OF ENGINEERING DRAWINGS AND SPECIFICATIONS CONTAINS CONFIDENTIAL, TRADE SECRET, AND OTHER PROPRIETARY INFORMATION OF DELL. ("DELL"). THIS DOCUMENT MAY NOT BE TRANSFERRED OR COPIED WITHOUT THE EXPRESS WRITTEN AUTHORIZATION OF DELL. IN ADDITION, NEITHER THIS SHEET NOR THE INFORMATION IT CONTAINS MAY BE USED BY OR DISCLOSED TO ANY THIRD PARTY WITHOUT DELL'S EXPRESS WRITTEN CONSENT.

Compal Electronics, Inc.

Title	PCH (1/8) SATA,HDA,SPI, LPC
Size	
Document Number	LA-6601P
Rev	1.0
Date:	Tuesday, November 30, 2010
Sheet	15 of 63

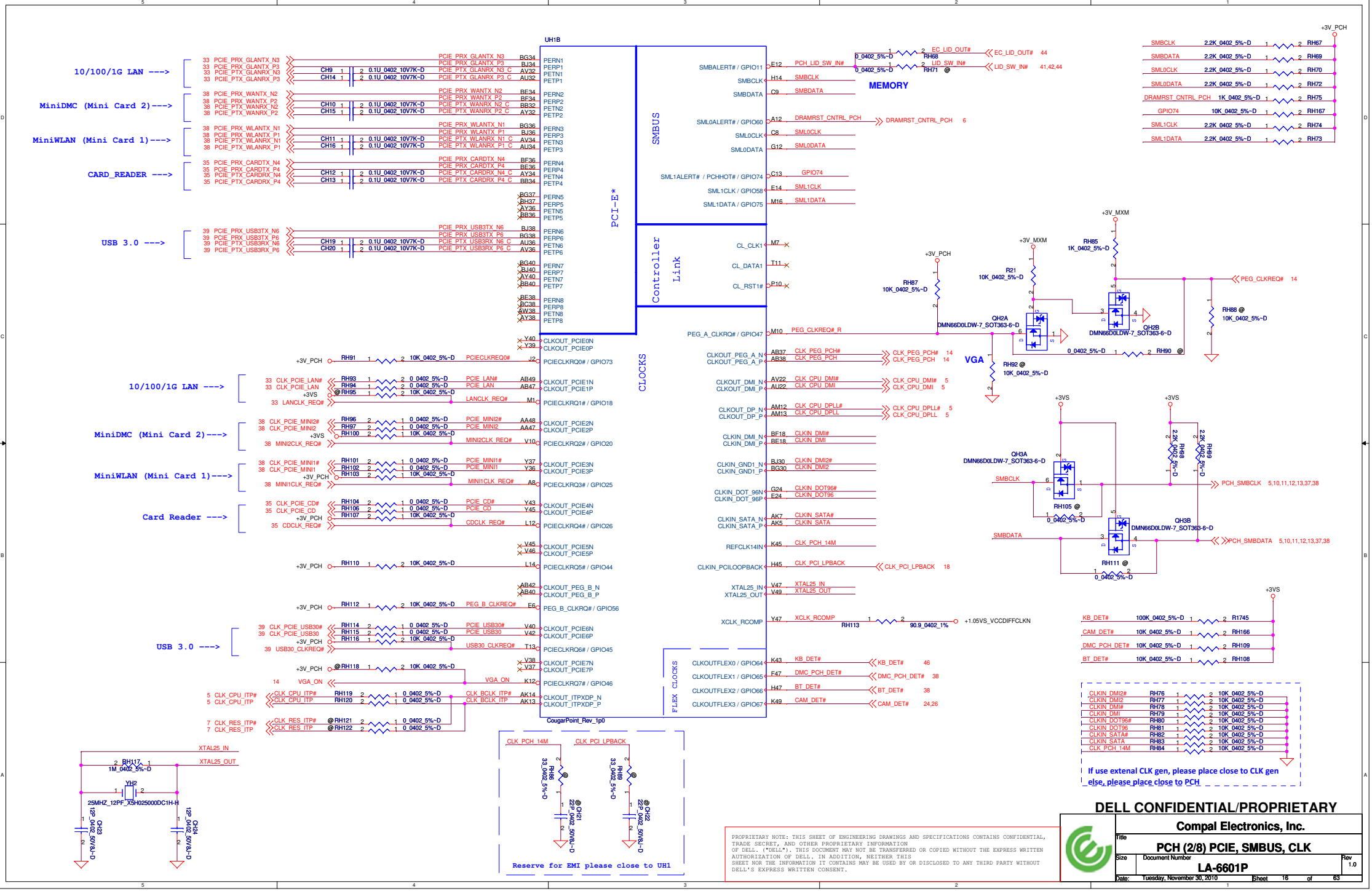

PROPRIETARY NOTE: THIS SHEET OF ENGINEERING DRAWINGS AND SPECIFICATIONS CONTAINS CONFIDENTIAL, TRADE SECRET, AND OTHER PROPRIETARY INFORMATION OF DELL. ("DELL"). THIS DOCUMENT MAY NOT BE TRANSFERRED OR COPIED WITHOUT THE EXPRESS WRITTEN AUTHORIZATION OF DELL. IN ADDITION, NEITHER THIS SHEET NOR THE INFORMATION IT CONTAINS MAY BE USED BY OR DISCLOSED TO ANY THIRD PARTY WITHOUT DELL'S EXPRESS WRITTEN CONSENT.

DELL CONFIDENTIAL/PROPRIETARY

Compal Electronics, Inc.

Title: PCH (2/8) PCIE, SMBUS, CLK

Size: | Document Number: LA-6601P | Rev: 1.0

Date: Tuesday, November 30, 2010 | Sheet 16 of 63

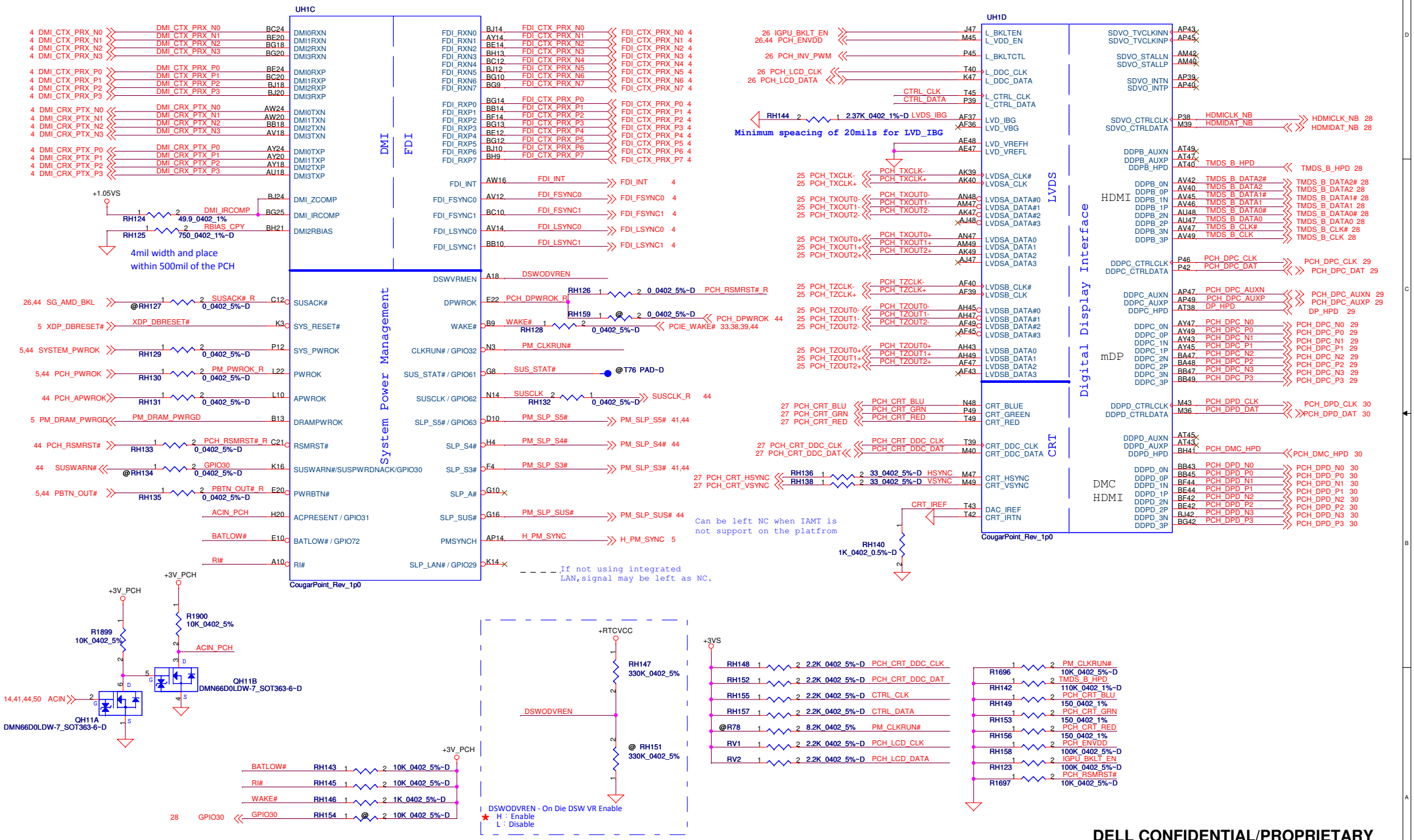

DELL CONFIDENTIAL/PROPRIETARY

PROPRIETARY NOTE: THIS SHEET OF ENGINEERING DRAWINGS AND SPECIFICATIONS CONTAINS CONFIDENTIAL, TRADE SECRET, AND OTHER PROPRIETARY INFORMATION OF DELL. ("DELL"). THIS DOCUMENT MAY NOT BE TRANSFERRED OR COPIED WITHOUT THE EXPRESS WRITTEN AUTHORIZATION OF DELL. IN ADDITION, NEITHER THIS SHEET NOR THE INFORMATION IT CONTAINS MAY BE USED BY OR DISCLOSED TO ANY THIRD PARTY WITHOUT DELL'S EXPRESS WRITTEN CONSENT.

Compal Electronics, Inc.

Title: PCH (3/8) DMI,FDI,PM,GFX,DP

Size | Document Number: LA-6601P | Rev 1.0

Date: Tuesday, November 30, 2010 | Sheet 17 of 63

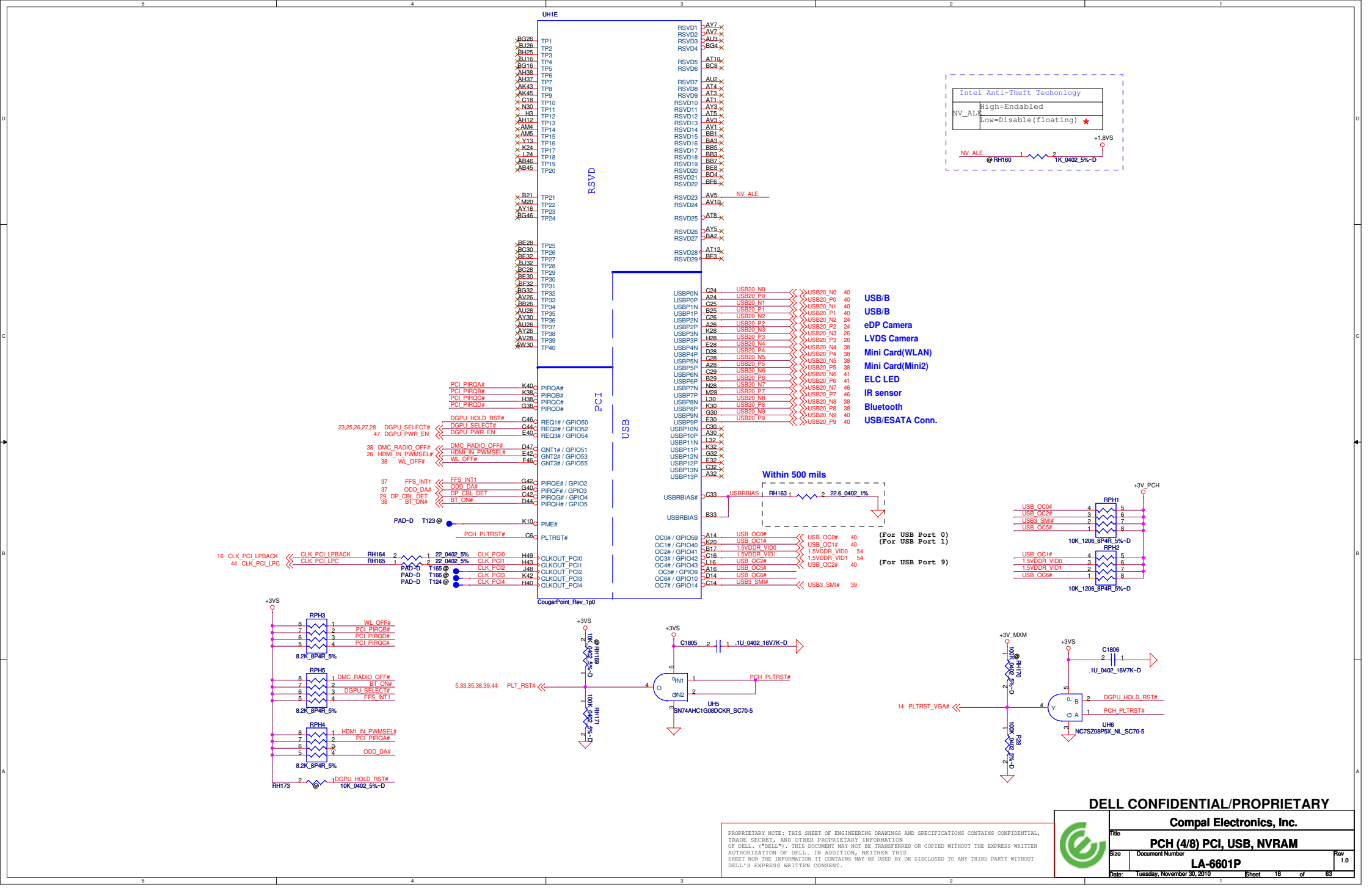

DELL CONFIDENTIAL/PROPRIETARY

PROPRIETARY NOTE: THIS SHEET OF ENGINEERING DRAWINGS AND SPECIFICATIONS CONTAINS CONFIDENTIAL, TRADE SECRET, AND OTHER PROPRIETARY INFORMATION OF DELL. ("DELL"). THIS DOCUMENT MAY NOT BE TRANSFERRED OR COPIED WITHOUT THE EXPRESS WRITTEN AUTHORIZATION OF DELL. IN ADDITION, NEITHER THIS SHEET NOR THE INFORMATION IT CONTAINS MAY BE USED BY OR DISCLOSED TO ANY THIRD PARTY WITHOUT DELL'S EXPRESS WRITTEN CONSENT.

Compal Electronics, Inc.	
Title	PCH (4/8) PCI, USB, NVRAM
Size / Document Number	LA-6601P
Rev	1.0
Date: Tuesday, November 30, 2010	Sheet 18 of 63

Layout note:
Trace wide 10mil & length 30mil
All NCTF pins should have thick
traces at 45°from the pad.

PROPRIETARY NOTE: THIS SHEET OF ENGINEERING DRAWINGS AND SPECIFICATIONS CONTAINS CONFIDENTIAL, TRADE SECRET, AND OTHER PROPRIETARY INFORMATION OF DELL. ("DELL"). THIS DOCUMENT MAY NOT BE TRANSFERRED OR COPIED WITHOUT THE EXPRESS WRITTEN AUTHORIZATION OF DELL. IN ADDITION, NEITHER THIS SHEET NOR THE INFORMATION IT CONTAINS MAY BE USED BY OR DISCLOSED TO ANY THIRD PARTY WITHOUT DELL'S EXPRESS WRITTEN CONSENT.

DELL CONFIDENTIAL/PROPRIETARY

Compal Electronics, Inc.	
Title	PCH (5/8) GPIO, CPU, MISC
Size / Document Number	LA-6601P
Rev	1.0
Date: Tuesday, November 30, 2010	Sheet 19 of 63

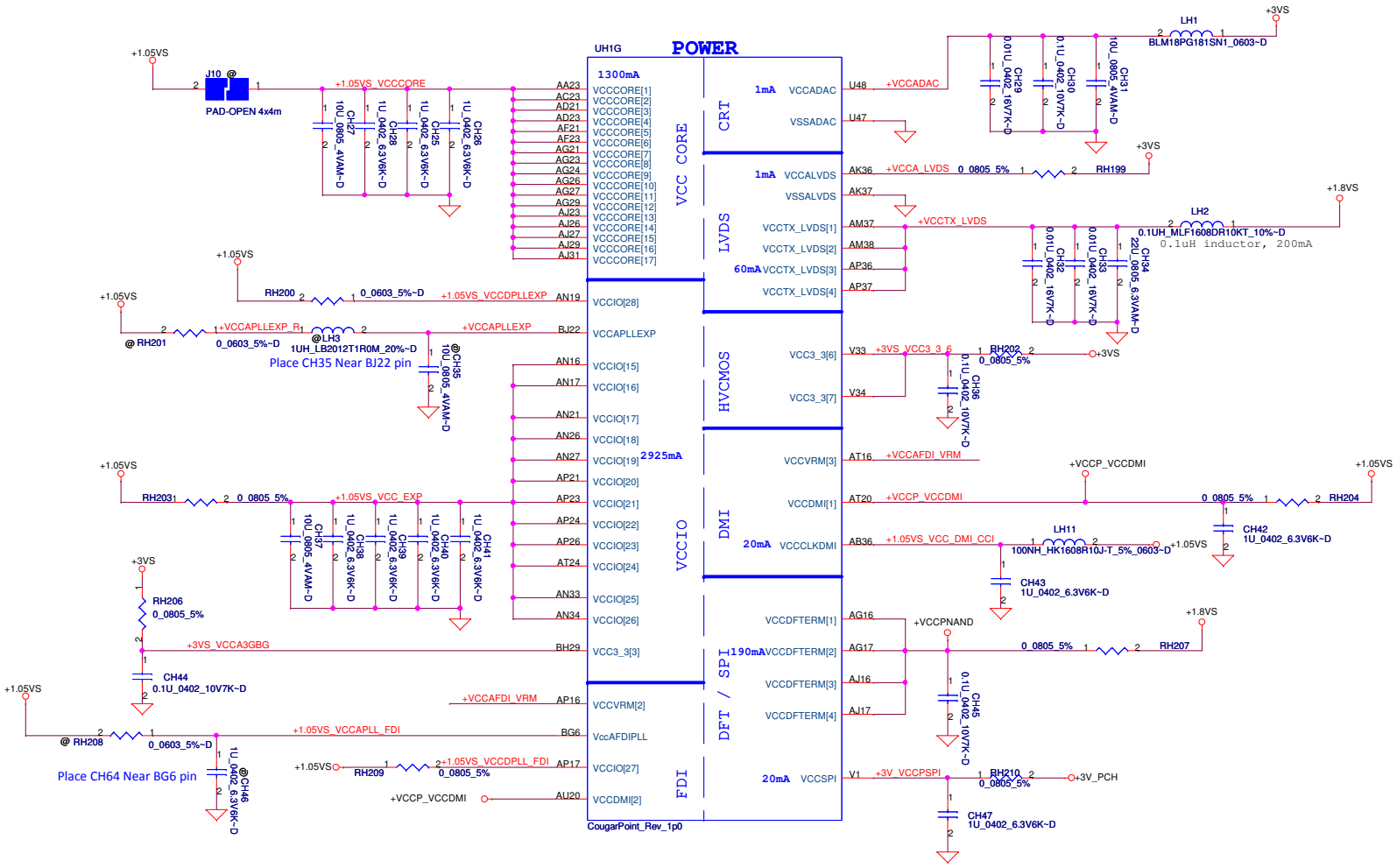

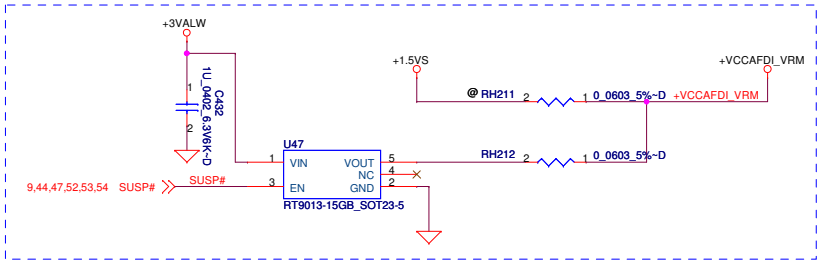

PCH Power Rail Table

Voltage Rail	Voltage	S0 Iccmax Current (A)
V_PROC_IO	1.05	0.001
V5REF	5	0.001
V5REF_Sus	5	0.001
Vcc3_3	3.3	0.266
VccADAC	3.3	0.001
VccADPLLA	1.05	0.08
VccADPLLB	1.05	0.08
VccCore	1.05	1.3
VccDMI	1.05	0.042
VccIO	1.05	2.925
VccASW	1.05	1.01
VccSPI	3.3	0.02
VccDSW	3.3	0.003
VccpNAND	1.8	0.19
VccRTC	3.3	6 uA
VccSus3_3	3.3	0.119
VccSusHDA	3.3 / 1.5	0.01
VccVRM	1.8 / 1.5	0.16
VccCLKDMI	1.05	0.02
VccSSC	1.05	0.095
VccDIFFCLKN	1.05	0.055
VccALVDS	3.3	0.001
VccTX_LVDS	1.8	0.06

PROPRIETARY NOTE: THIS SHEET OF ENGINEERING DRAWINGS AND SPECIFICATIONS CONTAINS CONFIDENTIAL, TRADE SECRET, AND OTHER PROPRIETARY INFORMATION OF DELL. ("DELL"). THIS DOCUMENT MAY NOT BE TRANSFERRED OR COPIED WITHOUT THE EXPRESS WRITTEN AUTHORIZATION OF DELL. IN ADDITION, NEITHER THIS SHEET NOR THE INFORMATION IT CONTAINS MAY BE USED BY OR DISCLOSED TO ANY THIRD PARTY WITHOUT DELL'S EXPRESS WRITTEN CONSENT.

DELL CONFIDENTIAL/PROPRIETARY

Compal Electronics, Inc.

Title: PCH (6/8) PWR

Size | Document Number: LA-6601P | Rev: 1.0

Date: Tuesday, November 30, 2010 | Sheet 20 of 63

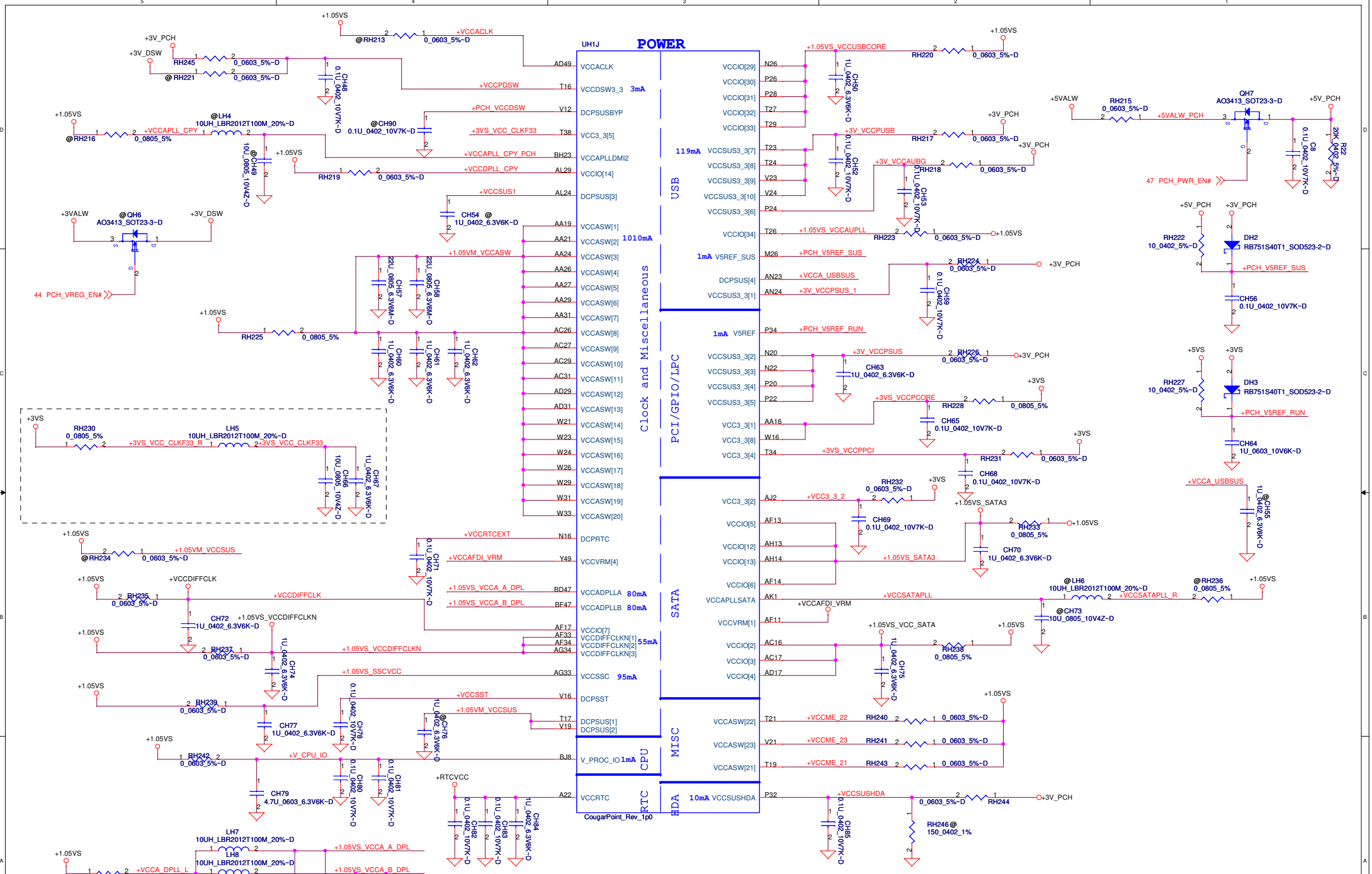

PROPRIETARY NOTE: THIS SHEET OF ENGINEERING DRAWINGS AND SPECIFICATIONS CONTAINS CONFIDENTIAL, TRADE SECRET, AND OTHER PROPRIETARY INFORMATION OF DELL. ("DELL"). THIS DOCUMENT MAY NOT BE TRANSFERRED OR COPIED WITHOUT THE EXPRESS WRITTEN AUTHORIZATION OF DELL. IN ADDITION, NEITHER THIS SHEET NOR THE INFORMATION IT CONTAINS MAY BE USED BY OR DISCLOSED TO ANY THIRD PARTY WITHOUT DELL'S EXPRESS WRITTEN CONSENT.

DELL CONFIDENTIAL/PROPRIETARY

Compal Electronics, Inc.

Title: PCH (7/8) PWR

Size | Document Number: LA-6601P | Rev: 1.0

Date: Tuesday, November 30, 2010 | Sheet 21 of 63

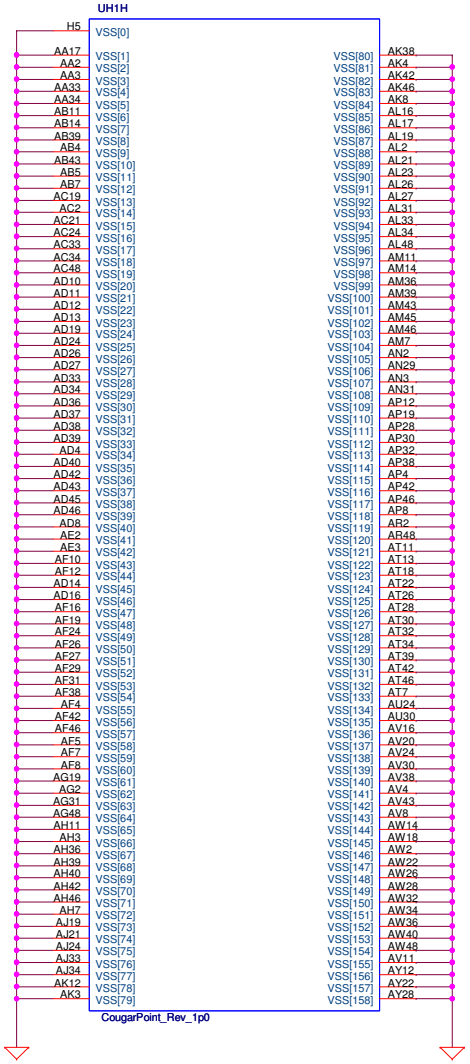

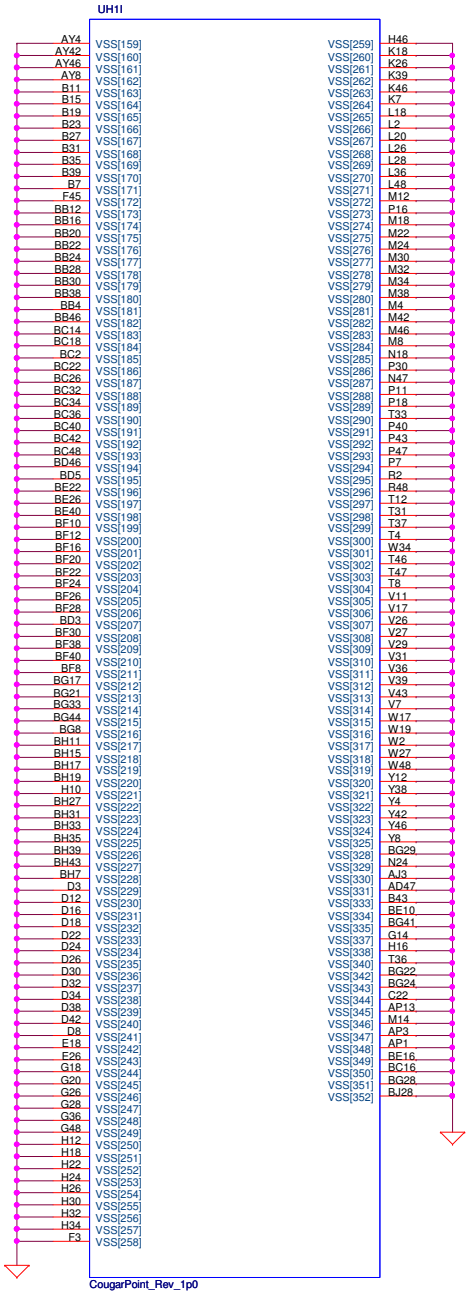

DELL CONFIDENTIAL/PROPRIETARY

PROPRIETARY NOTE: THIS SHEET OF ENGINEERING DRAWINGS AND SPECIFICATIONS CONTAINS CONFIDENTIAL, TRADE SECRET, AND OTHER PROPRIETARY INFORMATION OF DELL. ("DELL"). THIS DOCUMENT MAY NOT BE TRANSFERRED OR COPIED WITHOUT THE EXPRESS WRITTEN AUTHORIZATION OF DELL. IN ADDITION, NEITHER THIS SHEET NOR THE INFORMATION IT CONTAINS MAY BE USED BY OR DISCLOSED TO ANY THIRD PARTY WITHOUT DELL'S EXPRESS WRITTEN CONSENT.

Compal Electronics, Inc.

Title: **PCH (8/8) VSS**

Size | Document Number: **LA-6601P** | Rev: 1.0

Date: Tuesday, November 30, 2010 | Sheet 22 of 63

CPU & MXM SW for EDP

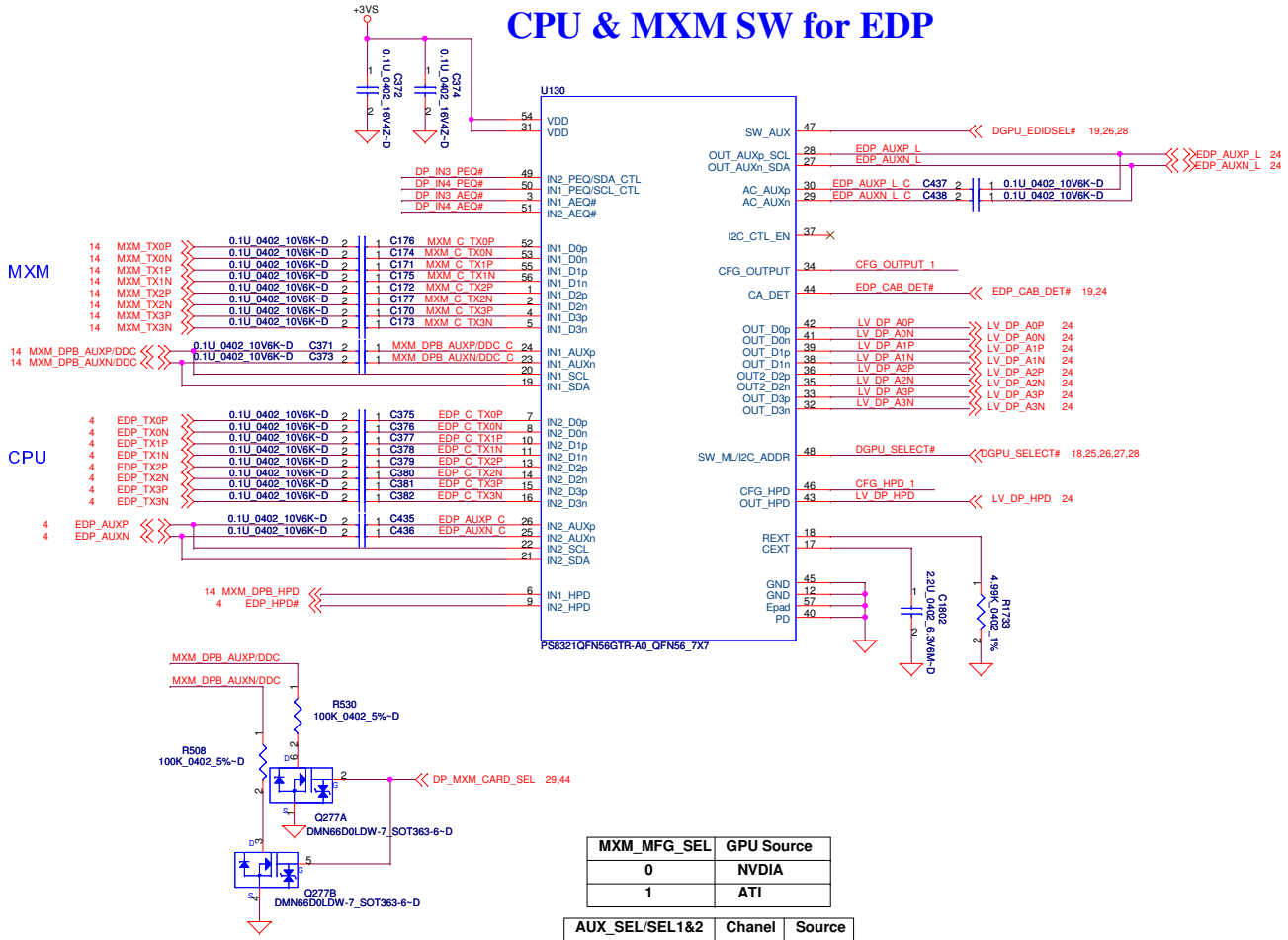

MXM_MFG_SEL	GPU Source
0	NVDIA
1	ATI

AUX_SEL/SEL1&2	Chanel	Source
0	A	CPU
1	B	MXM

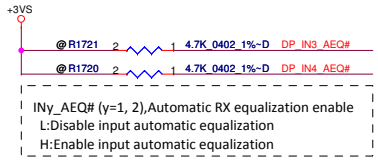

INy_AEQ# (y=1, 2),Automatic RX equalization enable
L:Disable input automatic equalization
H:Enable input automatic equalization

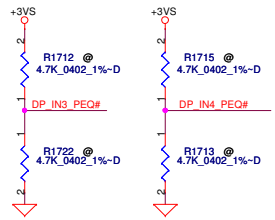

INy_PEQ(y = 1, 2),Programmable input equalization level setting
L:Low EQ setting (LEQ), default
H:High EQ setting (HEQ)
M:No EQ

CFG_OUTPUT: output configuration
L:Output is tracking DPCD register setting (auto interception)
H:Output swing level fixed at 600mV and no pre-emphasis
M:Output swing level is fixed at 400mV and no pre-emphasis

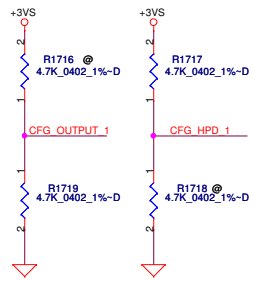

CFG_HPD,HPD switching configuration
L:HPD is switched by SW_ML
H:HPD is switched by SW_AUX
M:HPD is switched with overlap

DELL CONFIDENTIAL/PROPRIETARY

PROPRIETARY NOTE: THIS SHEET OF ENGINEERING DRAWINGS AND SPECIFICATIONS CONTAINS CONFIDENTIAL, TRADE SECRET, AND OTHER PROPRIETARY INFORMATION OF DELL. ("DELL"). THIS DOCUMENT MAY NOT BE TRANSFERRED OR COPIED WITHOUT THE EXPRESS WRITTEN AUTHORIZATION OF DELL. IN ADDITION, NEITHER THIS SHEET NOR THE INFORMATION IT CONTAINS MAY BE USED BY OR DISCLOSED TO ANY THIRD PARTY WITHOUT DELL'S EXPRESS WRITTEN CONSENT.

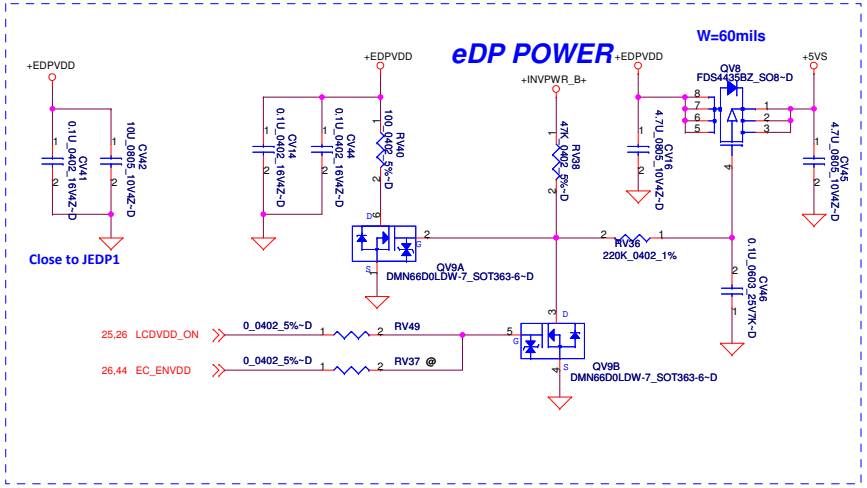

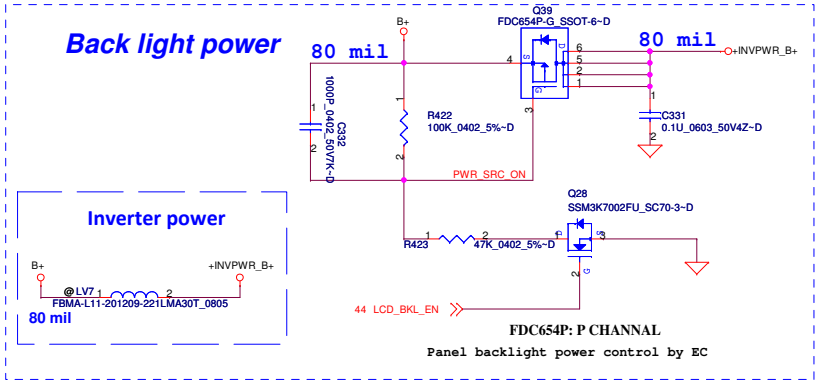

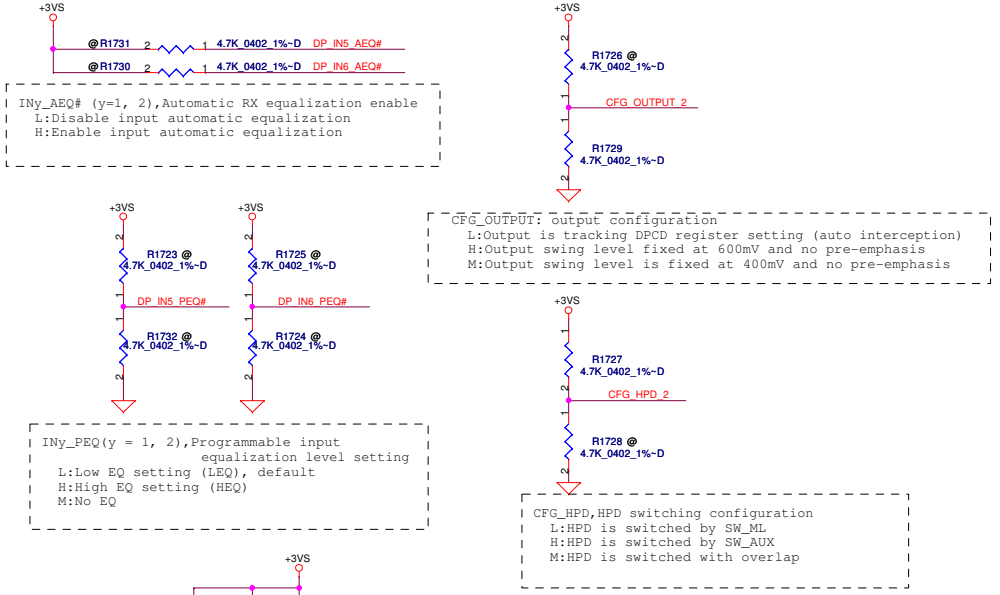

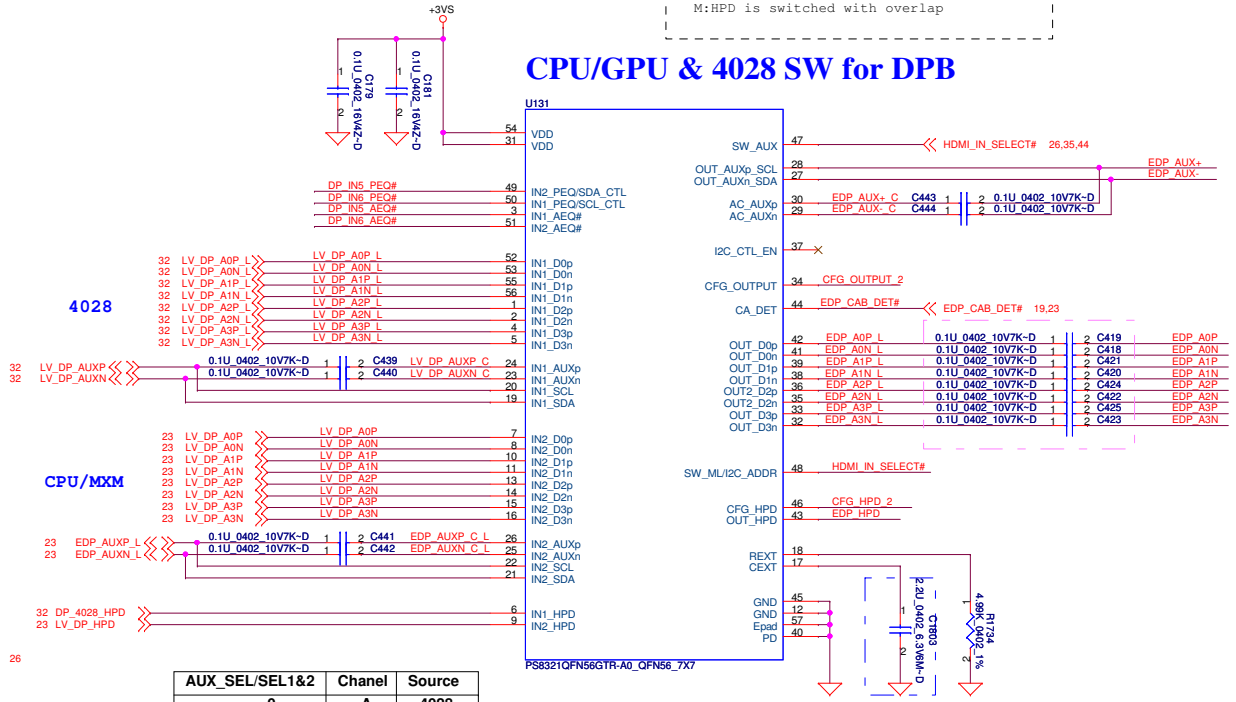

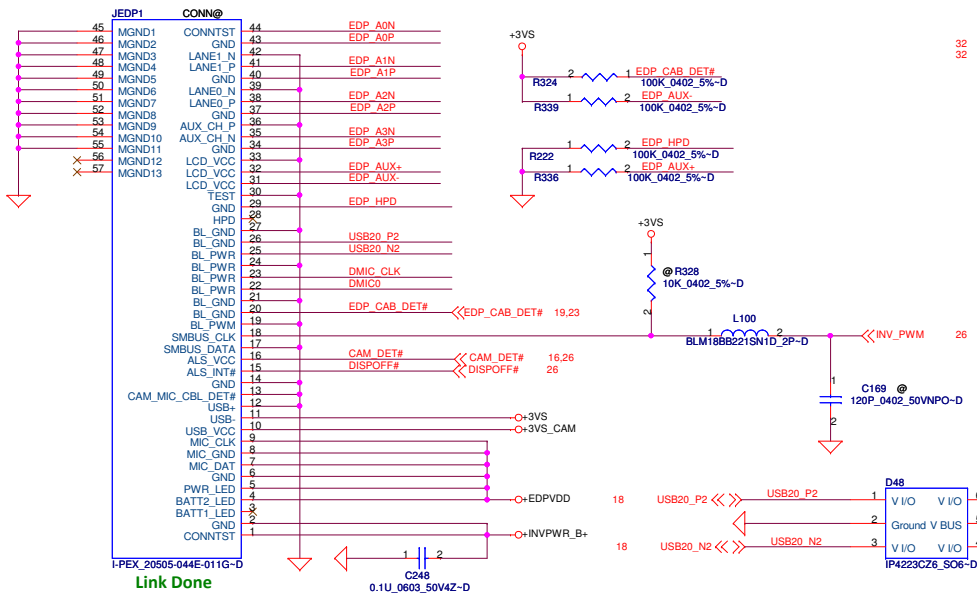

AUX_SEL/SEL1&2	Chanel	Source
0	A	4028
1	B	CPU/MXM

DELL CONFIDENTIAL/PROPRIETARY

Compal Electronics, Inc.

Title: eDP SW- 4028 & eDP CONN

Size | Document Number: LA-6601P | Rev: 1.0

Date: Tuesday, November 30, 2010 | Sheet 24 of 63

SEL	Y
L	GPU
H	PCH

STDP6038 SW STDP4028 PCH/GPU AUX for LVDS

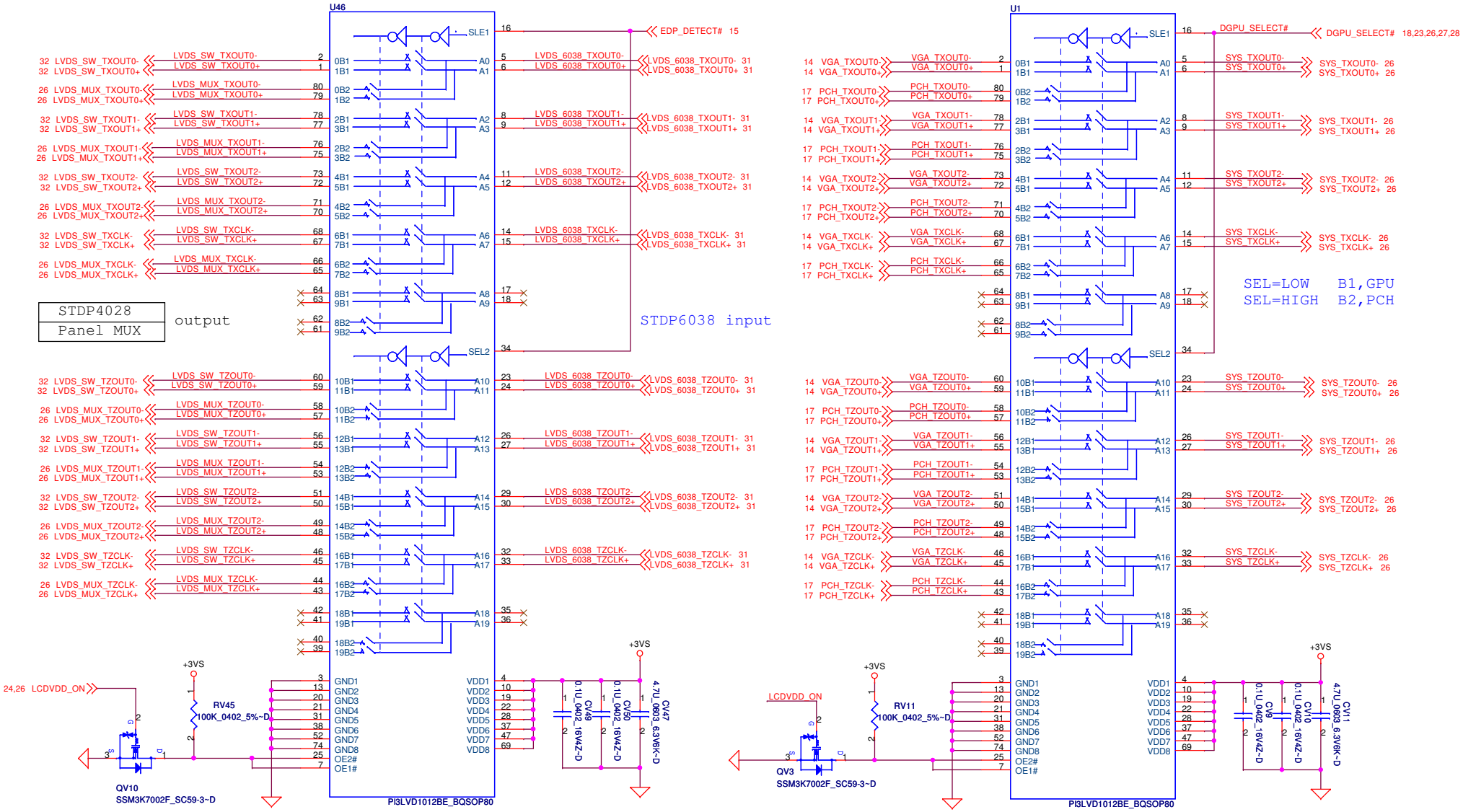

SEL	Y
L	STDP4028
H	Panel MUX

PROPRIETARY NOTE: THIS SHEET OF ENGINEERING DRAWINGS AND SPECIFICATIONS CONTAINS CONFIDENTIAL, TRADE SECRET, AND OTHER PROPRIETARY INFORMATION OF DELL. ("DELL"). THIS DOCUMENT MAY NOT BE TRANSFERRED OR COPIED WITHOUT THE EXPRESS WRITTEN AUTHORIZATION OF DELL. IN ADDITION, NEITHER THIS SHEET NOR THE INFORMATION IT CONTAINS MAY BE USED BY OR DISCLOSED TO ANY THIRD PARTY WITHOUT DELL'S EXPRESS WRITTEN CONSENT.

DELL CONFIDENTIAL/PROPRIETARY

Compal Electronics, Inc.

Title: LVDS SW- 1 to 2 & GPU/PCH

Size: | Document Number: LA-6601P | Rev: 1.0

Date: Tuesday, November 30, 2010 | Sheet 25 of 63

LCD Backlight Selector

PCH/GPU MUX & 6038 MUX SW for LVDS

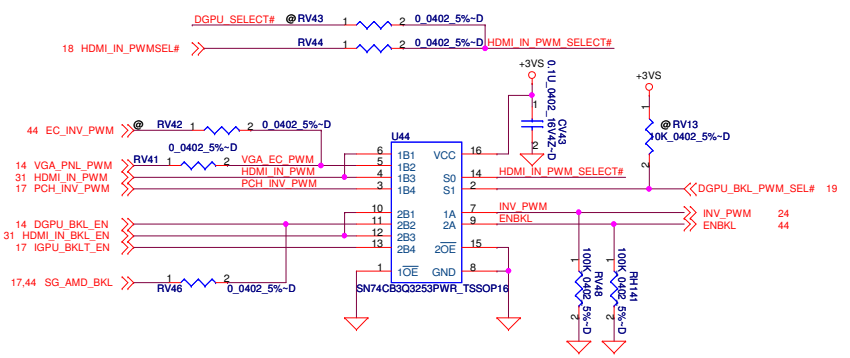

S1	S0	Output	Y
0	0	B1=B3	HDMI IN (D)
0	1	B2	DSC
1	0	B1=B3	HDMI IN (I)
1	1	B4	UMA

LCD DDC Selector

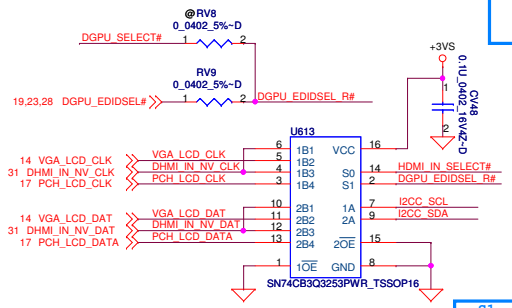

S1	S0	Output	Y
0	0	B1=B3	HDMI IN (D)
0	1	B2	DSC
1	0	B1=B3	HDMI IN (I)
1	1	B4	UMA

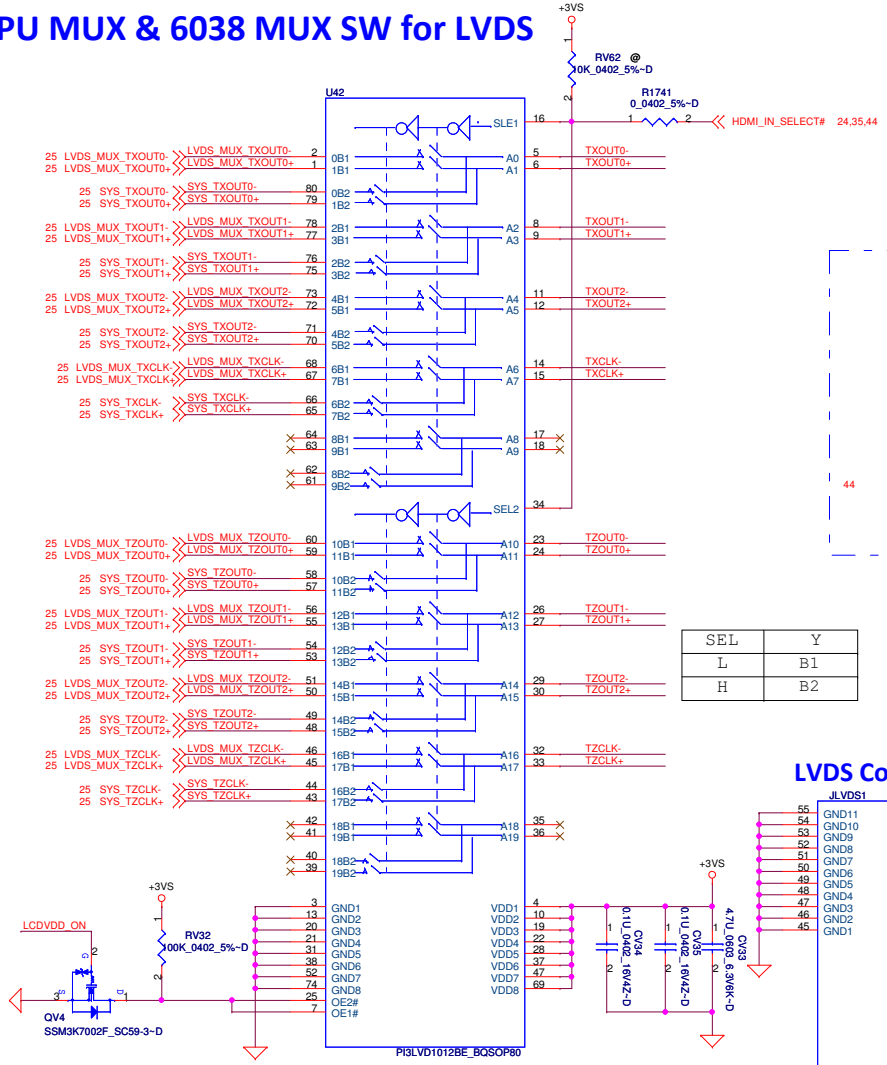

SEL	Y
L	B1
H	B2

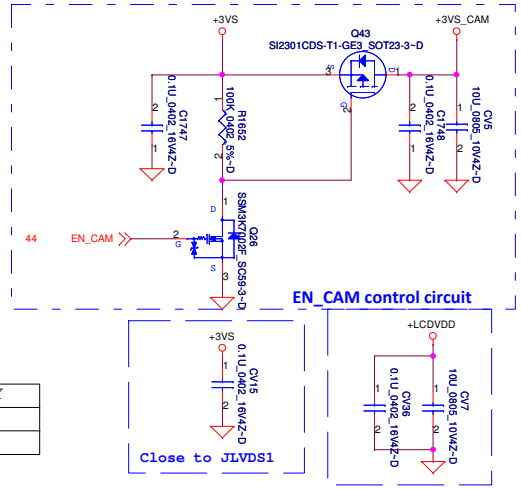

LVDS Conn.

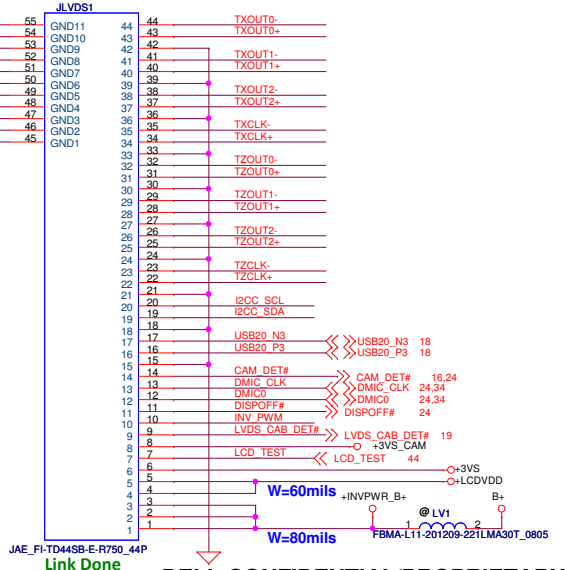

LCD POWER

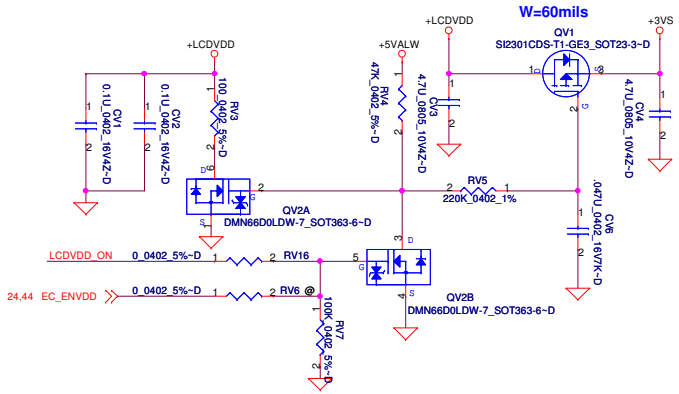

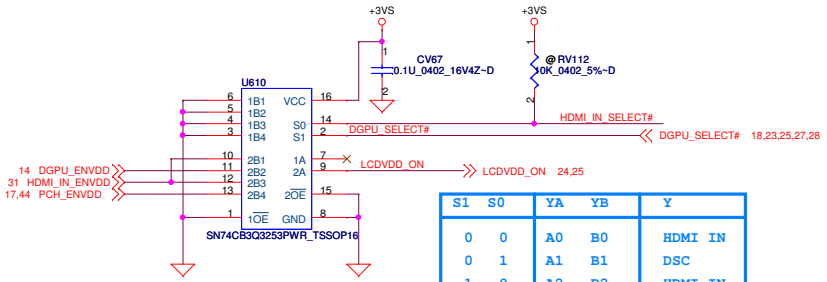

S1	S0	YA	YB	Y
0	0	A0	B0	HDMI IN
0	1	A1	B1	DSC
1	0	A2	B2	HDMI IN
1	1	A3	B3	UMA

PROPRIETARY NOTE: THIS SHEET OF ENGINEERING DRAWINGS AND SPECIFICATIONS CONTAINS CONFIDENTIAL, TRADE SECRET, AND OTHER PROPRIETARY INFORMATION OF DELL. ("DELL"). THIS DOCUMENT MAY NOT BE TRANSFERRED OR COPIED WITHOUT THE EXPRESS WRITTEN AUTHORIZATION OF DELL. IN ADDITION, NEITHER THIS SHEET NOR THE INFORMATION IT CONTAINS MAY BE USED BY OR DISCLOSED TO ANY THIRD PARTY WITHOUT DELL'S EXPRESS WRITTEN CONSENT.

DELL CONFIDENTIAL/PROPRIETARY

Compal Electronics, Inc.

Title: LVDS SW- 6038/SYSTEM & CONN

Size | Document Number: LA-6601P | Rev: 1.0

Date: Tuesday, November 30, 2010 | Sheet 26 of 63

VGA SW for PCH / GPU

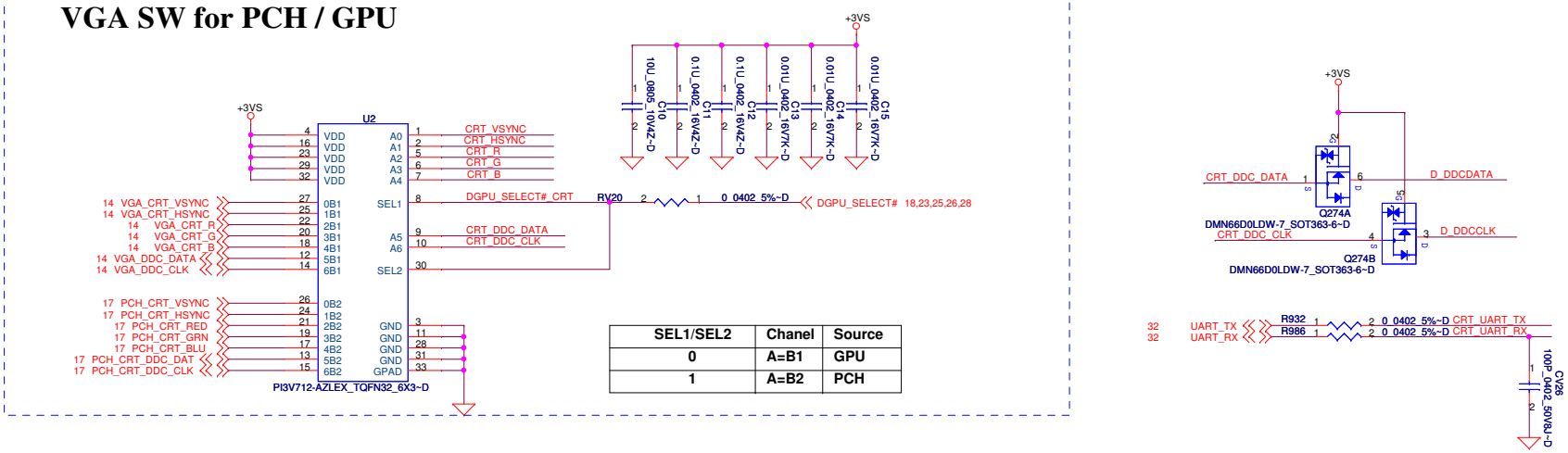

SEL1/SEL2	Chanel	Source
0	A=B1	GPU
1	A=B2	PCH

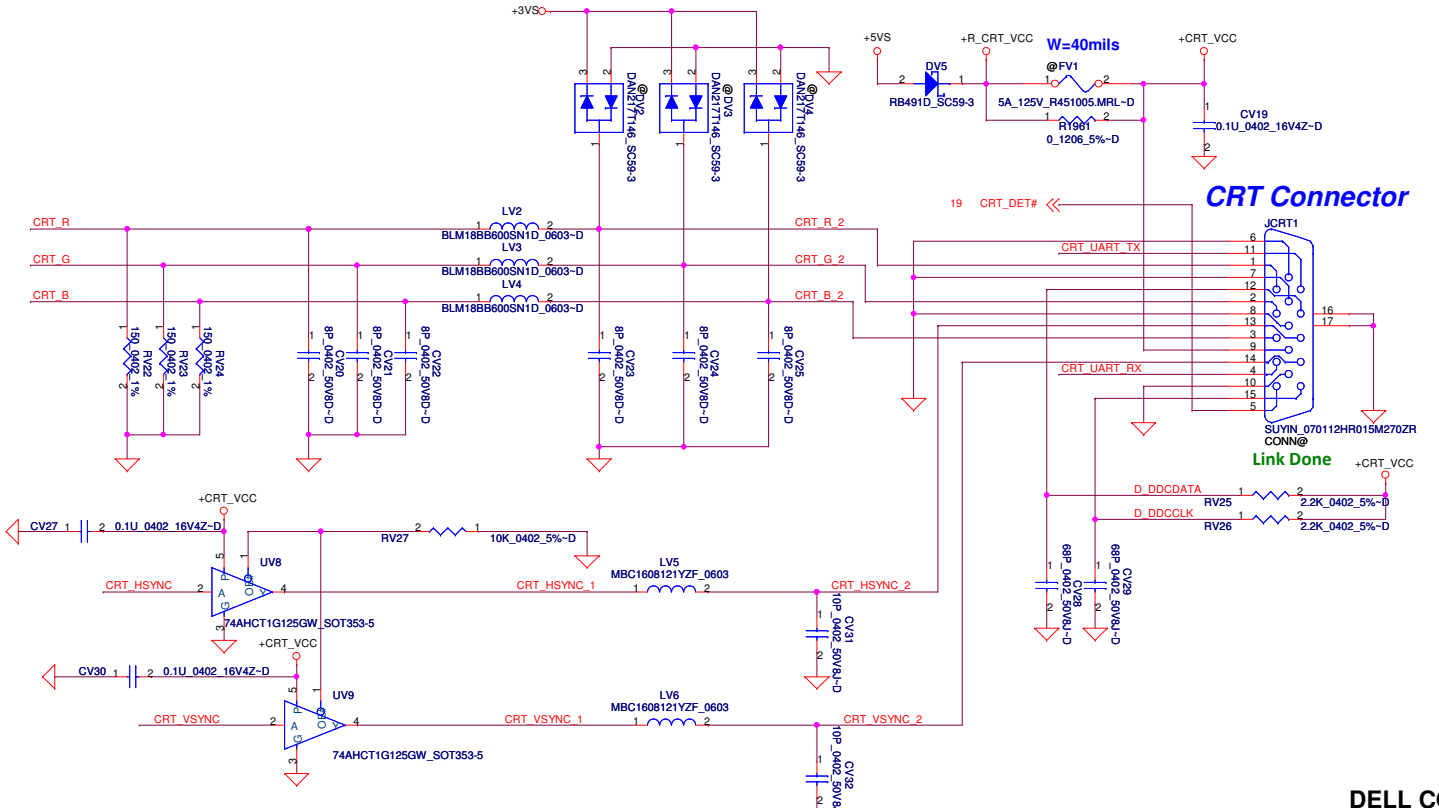

PROPRIETARY NOTE: THIS SHEET OF ENGINEERING DRAWINGS AND SPECIFICATIONS CONTAINS CONFIDENTIAL, TRADE SECRET, AND OTHER PROPRIETARY INFORMATION OF DELL. ("DELL"). THIS DOCUMENT MAY NOT BE TRANSFERRED OR COPIED WITHOUT THE EXPRESS WRITTEN AUTHORIZATION OF DELL. IN ADDITION, NEITHER THIS SHEET NOR THE INFORMATION IT CONTAINS MAY BE USED BY OR DISCLOSED TO ANY THIRD PARTY WITHOUT DELL'S EXPRESS WRITTEN CONSENT.

DELL CONFIDENTIAL/PROPRIETARY

Compal Electronics, Inc.

Title: CRT SW

Size | Document Number: LA-6601P | Rev: 1.0

Date: Tuesday, November 30, 2010 | Sheet 27 of 63

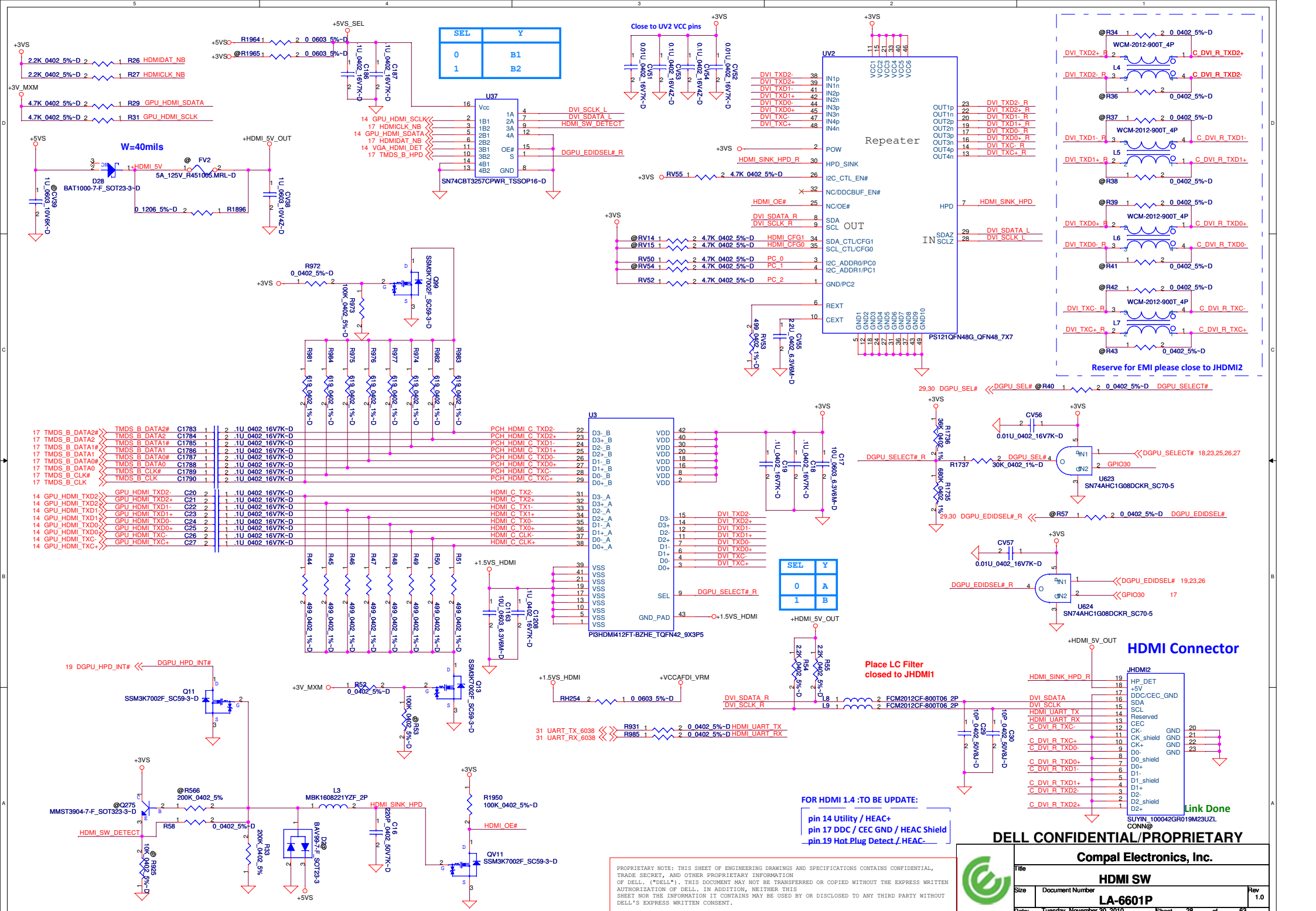
HDMI Connector
Repeater
PS121QFN48G_QFN48_7X7
SN74CBT3257CPWR_TSSOP16~D
PI3HDMI412FT-BZHE_TQFN42_9X3P5
SN74AHC1G08DCKR_SC70-5
Place LC Filter closed to JHDMI1
Close to UV2 VCC pins
Reserve for EMI please close to JHDMI2
W=40mils
FOR HDMI 1.4 :TO BE UPDATE:
pin 14 Utility / HEAC+
pin 17 DDC / CEC GND / HEAC Shield
pin 19 Hot Plug Detect / HEAC-
Link Done
DELL CONFIDENTIAL/PROPRIETARY
Compal Electronics, Inc.
HDMI SW
LA-6601P
Tuesday, November 30, 2010
28 of 63

DP Redriver

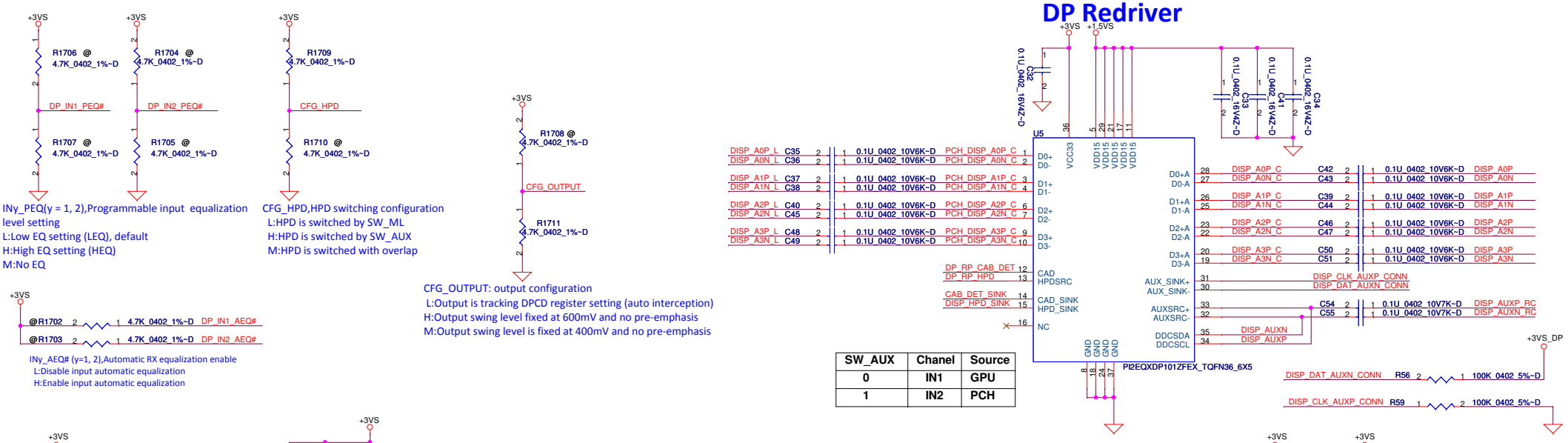

SW_AUX	Chanel	Source
0	IN1	GPU
1	IN2	PCH

PCH/GPU AUX&LANE SW for DPB

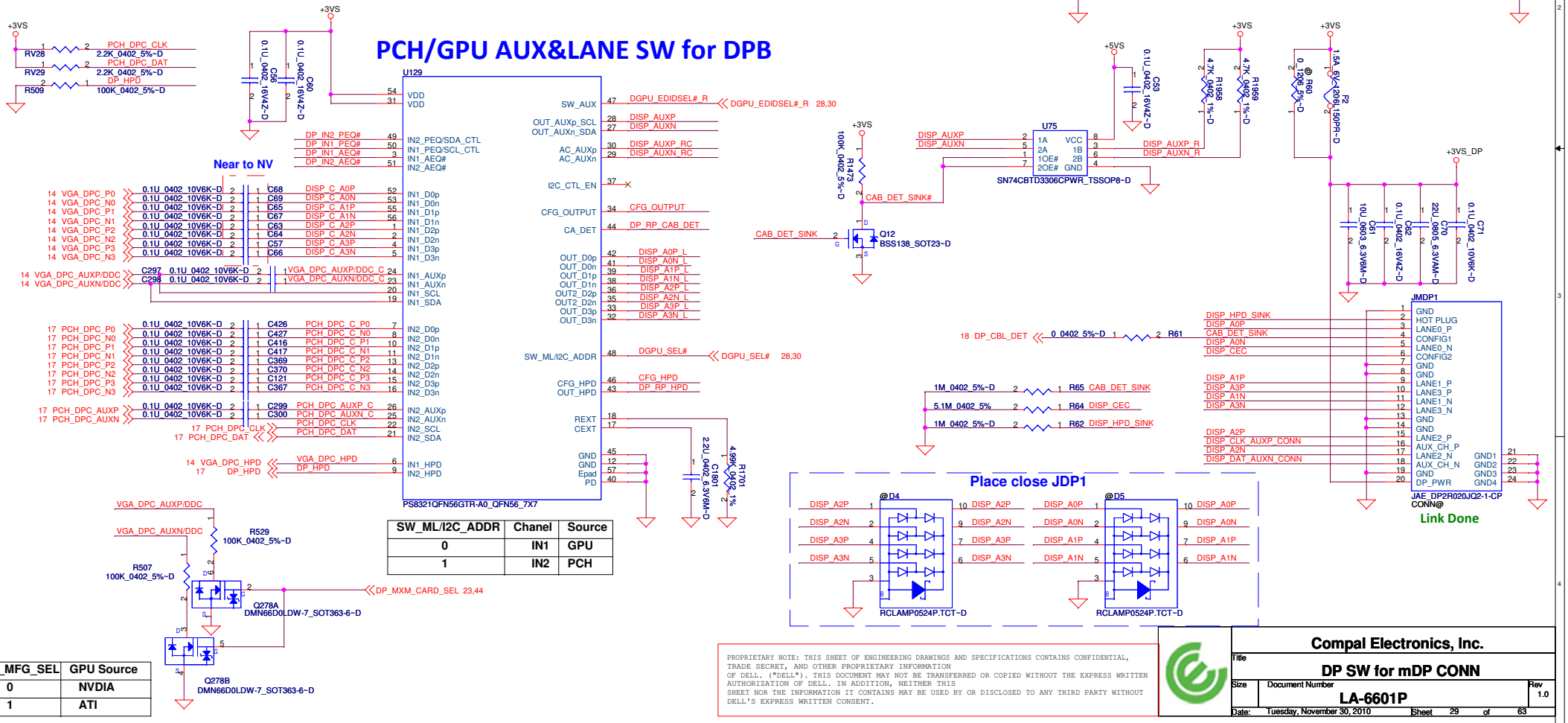

SW_ML/I2C_ADDR	Chanel	Source
0	IN1	GPU
1	IN2	PCH

MXM_MFG_SEL	GPU Source
0	NVDIA
1	ATI

PROPRIETARY NOTE: THIS SHEET OF ENGINEERING DRAWINGS AND SPECIFICATIONS CONTAINS CONFIDENTIAL, TRADE SECRET, AND OTHER PROPRIETARY INFORMATION OF DELL. ("DELL"). THIS DOCUMENT MAY NOT BE TRANSFERRED OR COPIED WITHOUT THE EXPRESS WRITTEN AUTHORIZATION OF DELL. IN ADDITION, NEITHER THIS SHEET NOR THE INFORMATION IT CONTAINS MAY BE USED BY OR DISCLOSED TO ANY THIRD PARTY WITHOUT DELL'S EXPRESS WRITTEN CONSENT.

Compal Electronics, Inc.
Title: DP SW for mDP CONN
Size: Document Number: LA-6601P
Rev: 1.0
Date: Tuesday, November 30, 2010
Sheet 29 of 63

PCH/GPU AUX&LANE SW for DPB

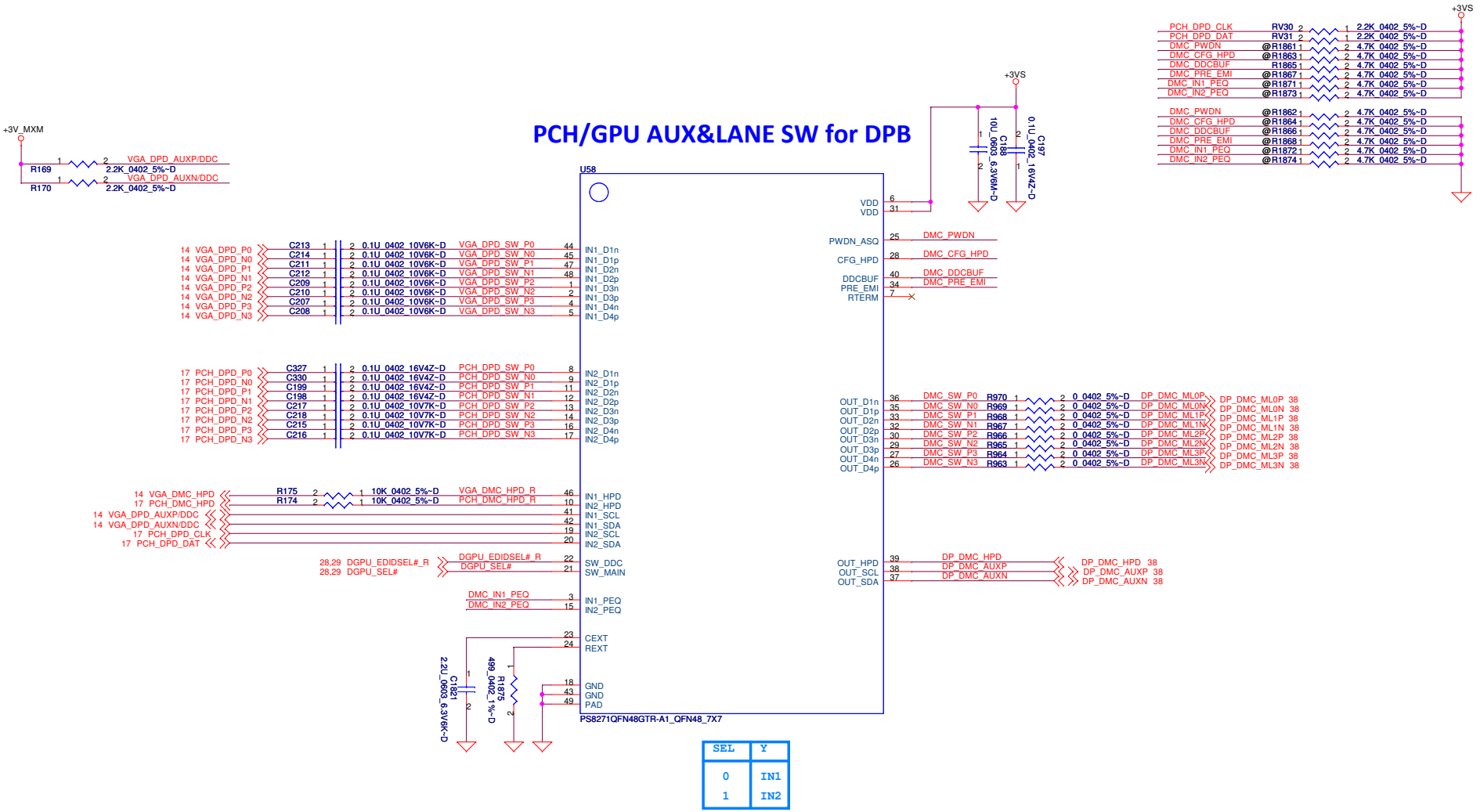

SEL	Y
0	IN1
1	IN2

PROPRIETARY NOTE: THIS SHEET OF ENGINEERING DRAWINGS AND SPECIFICATIONS CONTAINS CONFIDENTIAL, TRADE SECRET, AND OTHER PROPRIETARY INFORMATION OF DELL. ("DELL"). THIS DOCUMENT MAY NOT BE TRANSFERRED OR COPIED WITHOUT THE EXPRESS WRITTEN AUTHORIZATION OF DELL. IN ADDITION, NEITHER THIS SHEET NOR THE INFORMATION IT CONTAINS MAY BE USED BY OR DISCLOSED TO ANY THIRD PARTY WITHOUT DELL'S EXPRESS WRITTEN CONSENT.

DELL CONFIDENTIAL/PROPRIETARY

Compal Electronics, Inc.

Title: HDMI SW for DMC

Size | Document Number: LA-6601P | Rev 1.0

Date: Tuesday, November 30, 2010 | Sheet 30 of 63

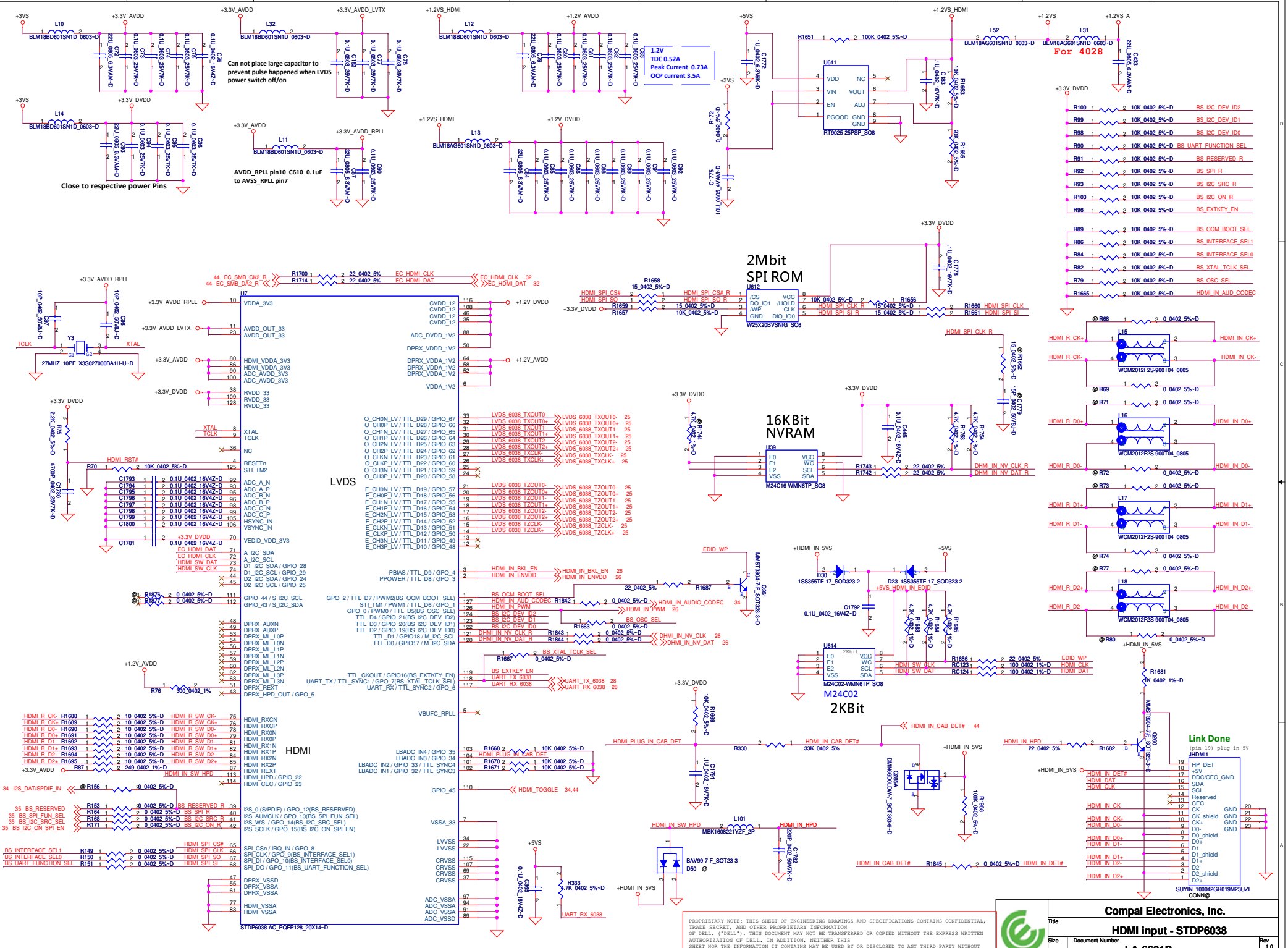
Can not place large capacitor to prevent pulse happened when LVDS power switch off/on
1.2V
TDC 0.52A
Peak Current 0.73A
OCP current 3.5A
For 4028
Close to respective power Pins
AVDD_RPLL pin10 C610 0.1uF to AVSS_RPLL pin7
2Mbit SPI ROM
16KBit NVRAM
M24C02 2KBit
LVDS
HDMI
Link Done
STDP6038-AC_PQFP128_20X14-D
Compal Electronics, Inc.
HDMI input - STDP6038
LA-6601P
Tuesday, November 30, 2010
Sheet 31 of 63

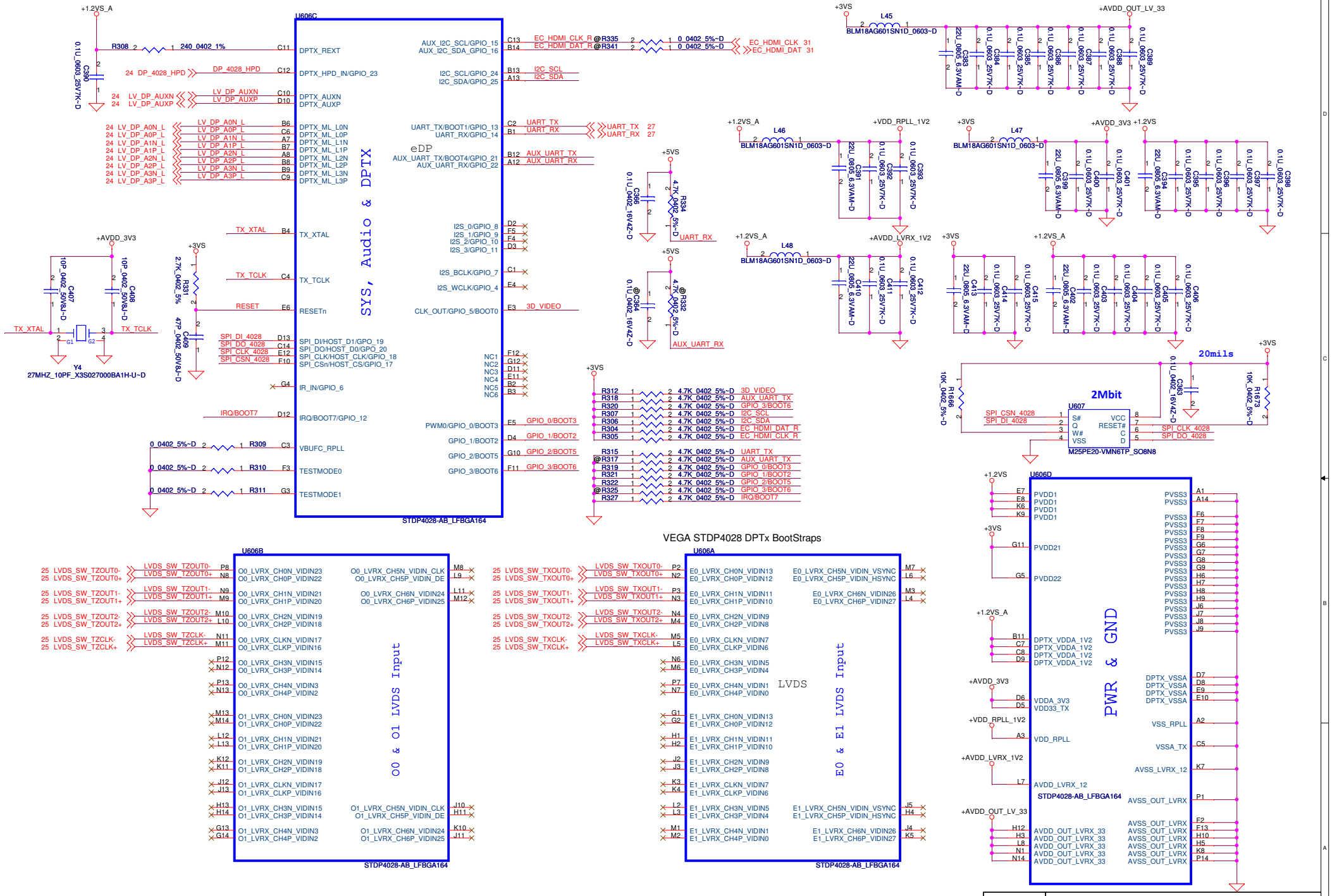

PROPRIETARY NOTE: THIS SHEET OF ENGINEERING DRAWINGS AND SPECIFICATIONS CONTAINS CONFIDENTIAL, TRADE SECRET, AND OTHER PROPRIETARY INFORMATION OF DELL. ("DELL"). THIS DOCUMENT MAY NOT BE TRANSFERRED OR COPIED WITHOUT THE EXPRESS WRITTEN AUTHORIZATION OF DELL. IN ADDITION, NEITHER THIS SHEET NOR THE INFORMATION IT CONTAINS MAY BE USED BY OR DISCLOSED TO ANY THIRD PARTY WITHOUT DELL'S EXPRESS WRITTEN CONSENT.

Compal Electronics, Inc.

Title: LVDS transfer eDP-STDP4028

Size | Document Number: LA-6601P | Rev: 1.0

Date: Tuesday, November 30, 2010 | Sheet 32 of 63

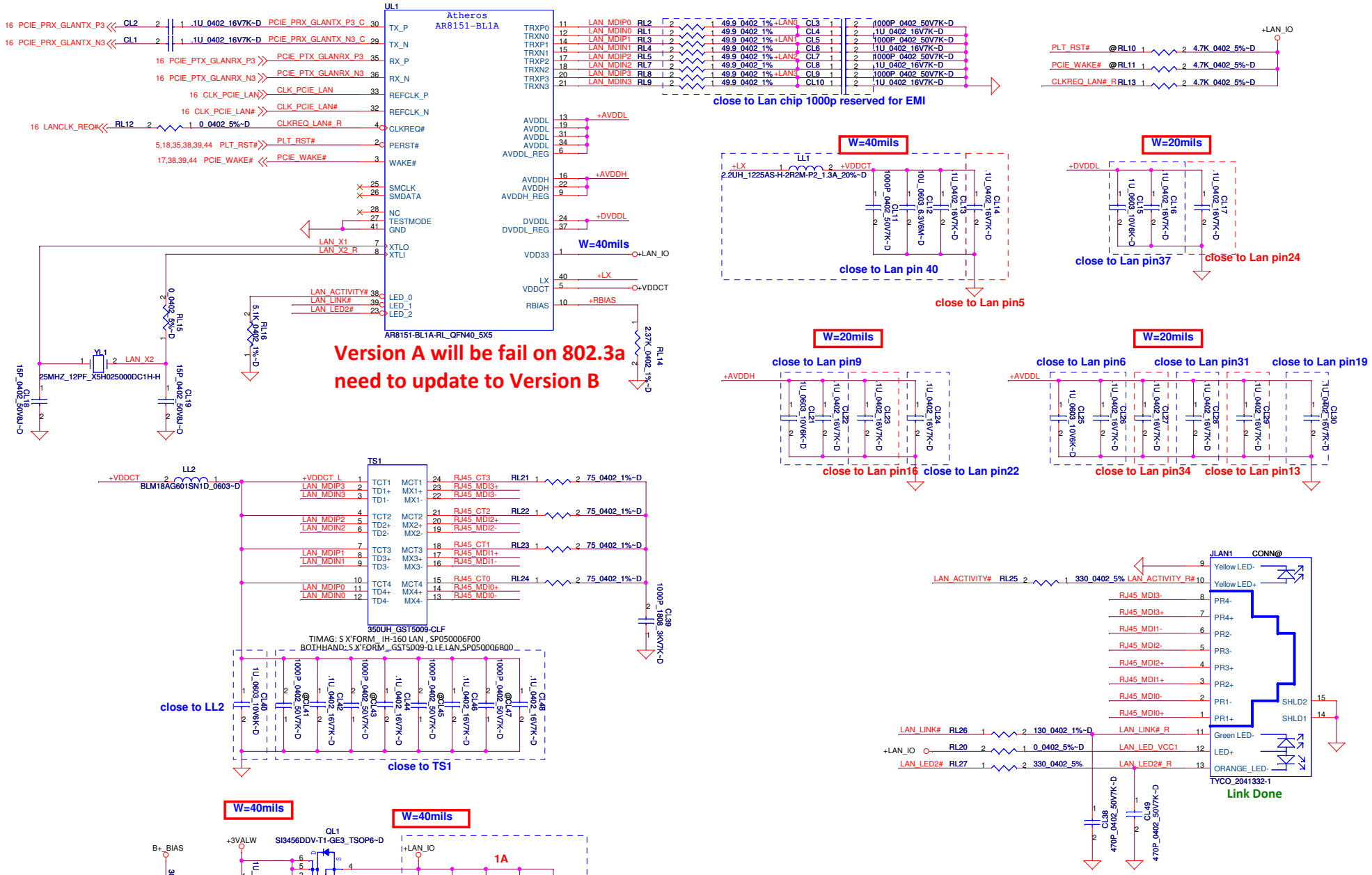

PROPRIETARY NOTE: THIS SHEET OF ENGINEERING DRAWINGS AND SPECIFICATIONS CONTAINS CONFIDENTIAL, TRADE SECRET, AND OTHER PROPRIETARY INFORMATION OF DELL. ("DELL"). THIS DOCUMENT MAY NOT BE TRANSFERRED OR COPIED WITHOUT THE EXPRESS WRITTEN AUTHORIZATION OF DELL. IN ADDITION, NEITHER THIS SHEET NOR THE INFORMATION IT CONTAINS MAY BE USED BY OR DISCLOSED TO ANY THIRD PARTY WITHOUT DELL'S EXPRESS WRITTEN CONSENT.

DELL CONFIDENTIAL/PROPRIETARY

Compal Electronics, Inc.	
Title: GLAN AR8151 AL1A	
Size	Document Number: LA-6601P	Rev 1.0
Date: Tuesday, November 30, 2010	Sheet 33 of 63

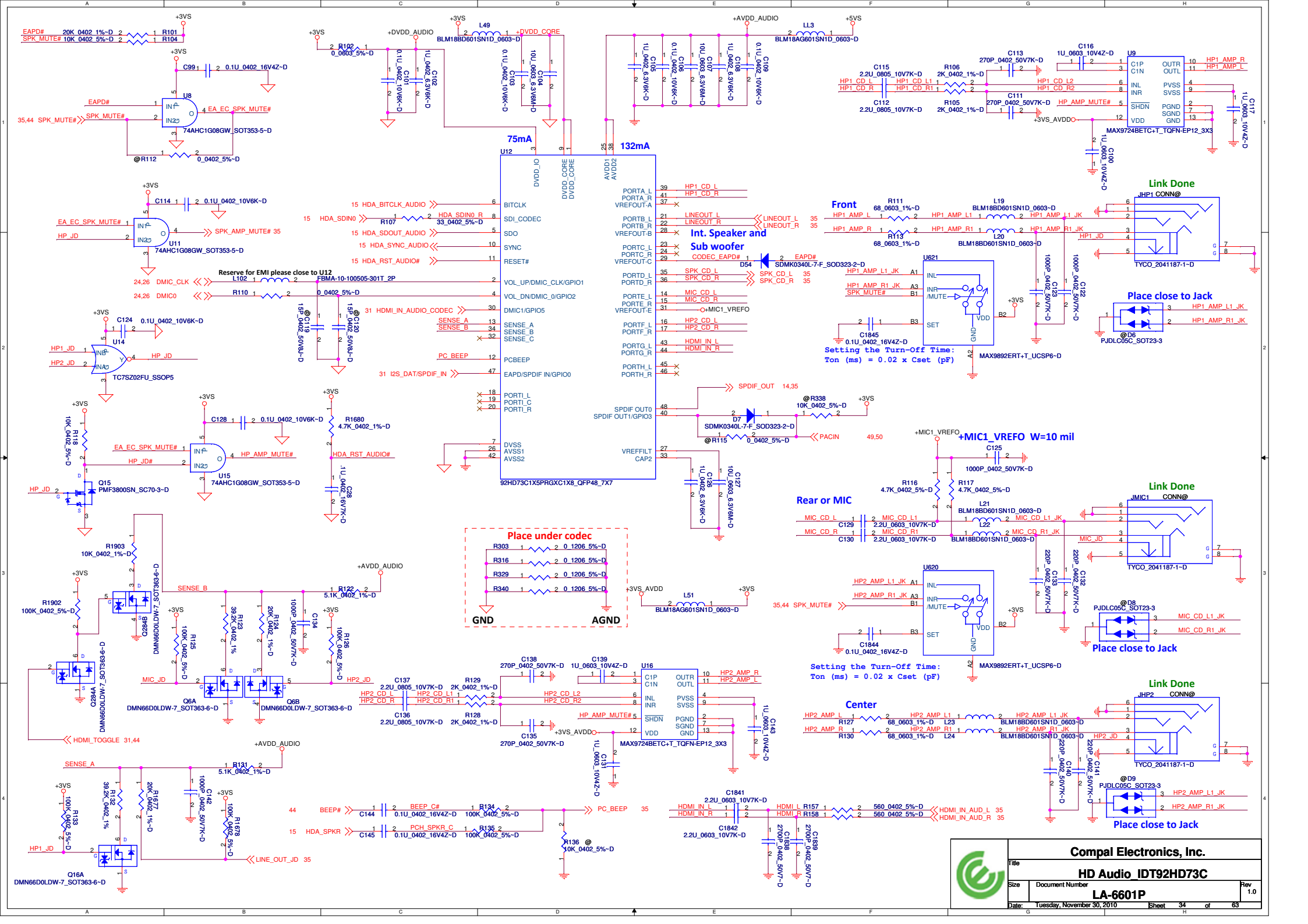
75mA
132mA
U12
92HD73C1X5PRGXC1X8_QFP48_7X7
Int. Speaker and Sub woofer
Front
Rear or MIC
Center
Link Done
Place close to Jack
Place under codec
GND
AGND
+MIC1_VREFO W=10 mil
Setting the Turn-Off Time:
Ton (ms) = 0.02 x Cset (pF)
MAX9724BETC+T_TQFN-EP12_3X3
MAX9892ERT+T_UCSP6~D
Reserve for EMI please close to U12
Compal Electronics, Inc.
HD Audio_IDT92HD73C
LA-6601P
Rev 1.0
Tuesday, November 30, 2010
Sheet 34 of 63

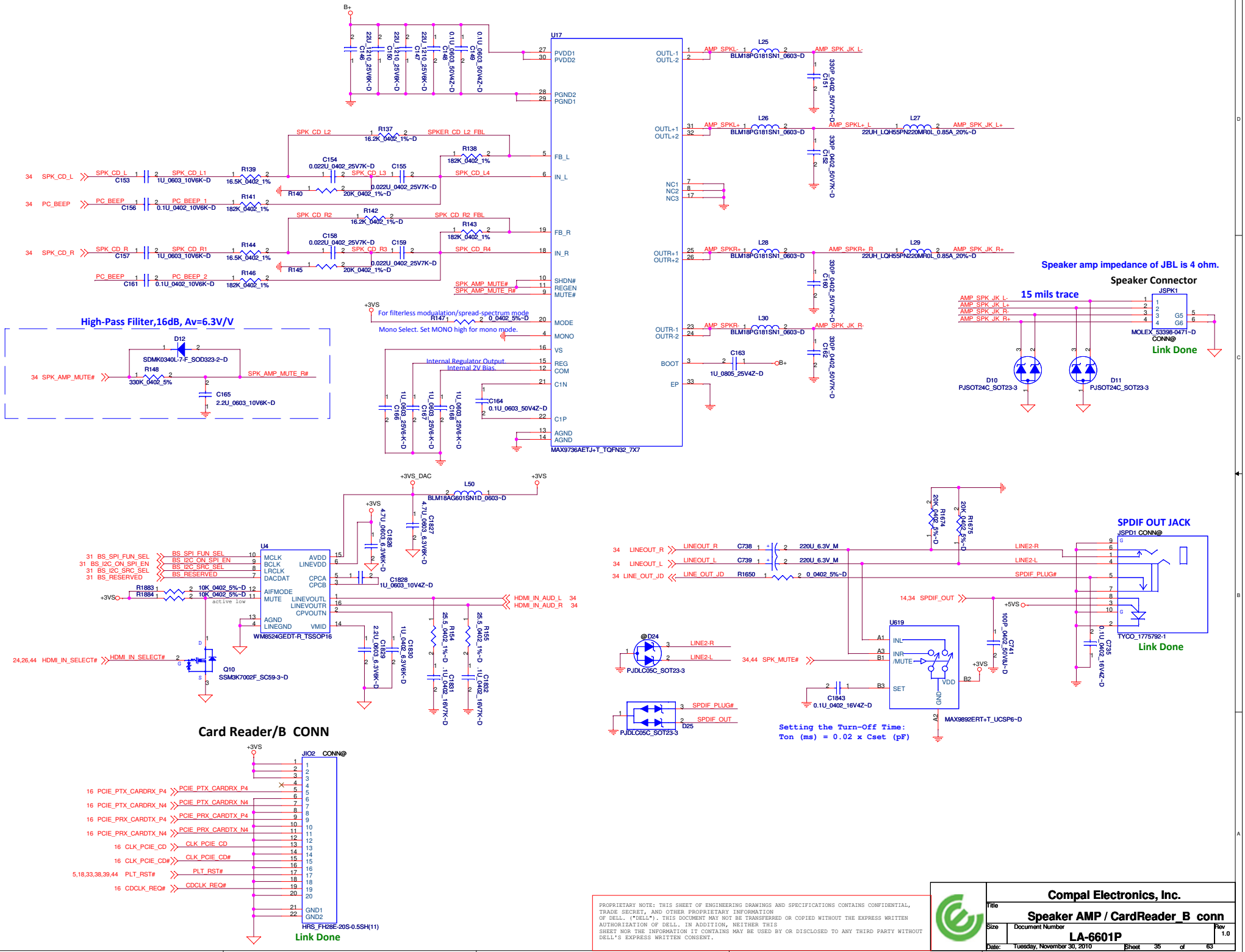

PROPRIETARY NOTE: THIS SHEET OF ENGINEERING DRAWINGS AND SPECIFICATIONS CONTAINS CONFIDENTIAL, TRADE SECRET, AND OTHER PROPRIETARY INFORMATION OF DELL. ("DELL"). THIS DOCUMENT MAY NOT BE TRANSFERRED OR COPIED WITHOUT THE EXPRESS WRITTEN AUTHORIZATION OF DELL. IN ADDITION, NEITHER THIS SHEET NOR THE INFORMATION IT CONTAINS MAY BE USED BY OR DISCLOSED TO ANY THIRD PARTY WITHOUT DELL'S EXPRESS WRITTEN CONSENT.

Compal Electronics, Inc.	
Title	Speaker AMP / CardReader_B conn
Size	Document Number: LA-6601P
Rev	1.0
Date: Tuesday, November 30, 2010	Sheet 35 of 63

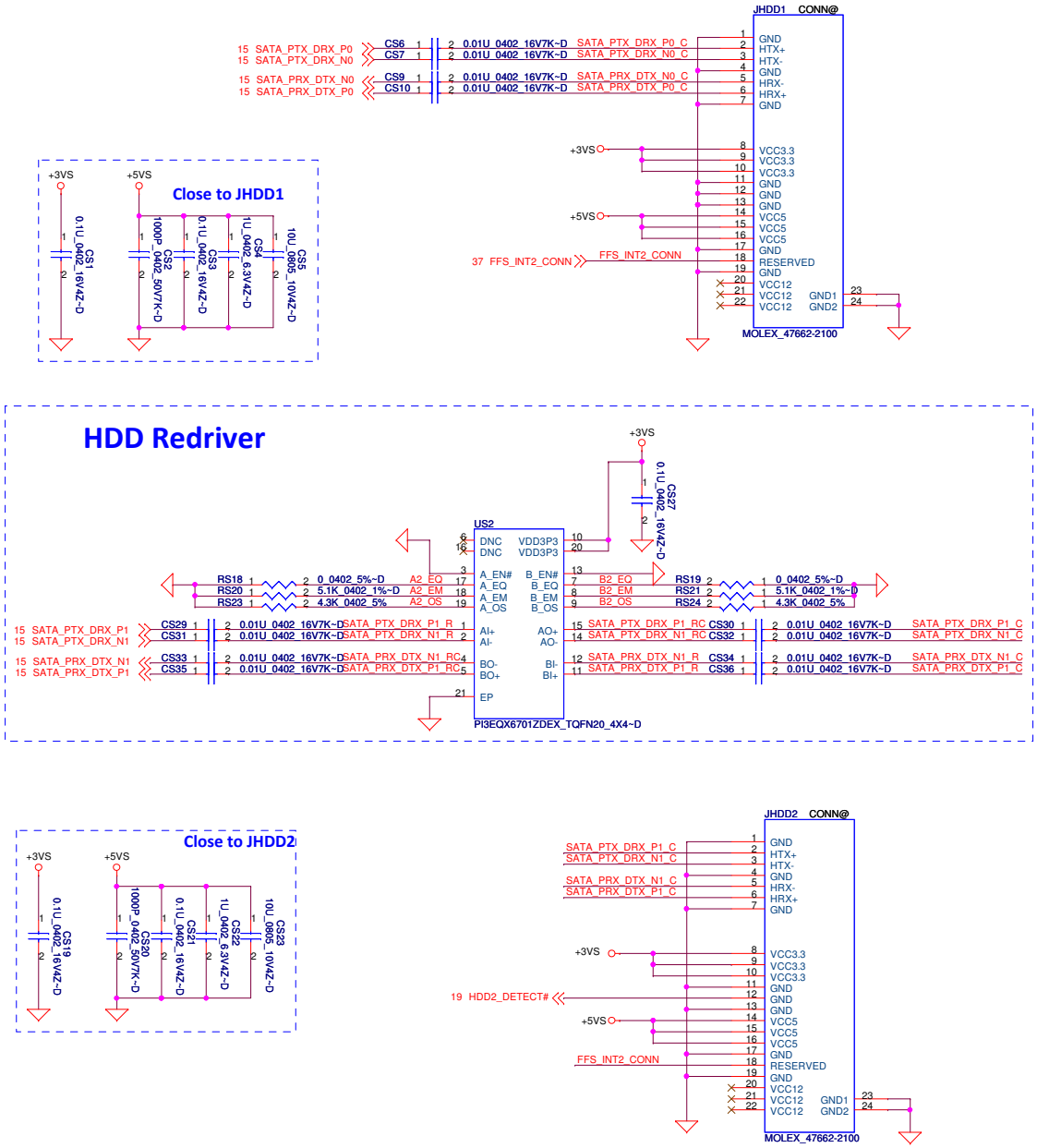

DELL CONFIDENTIAL/PROPRIETARY

PROPRIETARY NOTE: THIS SHEET OF ENGINEERING DRAWINGS AND SPECIFICATIONS CONTAINS CONFIDENTIAL, TRADE SECRET, AND OTHER PROPRIETARY INFORMATION OF DELL. ("DELL"). THIS DOCUMENT MAY NOT BE TRANSFERRED OR COPIED WITHOUT THE EXPRESS WRITTEN AUTHORIZATION OF DELL. IN ADDITION, NEITHER THIS SHEET NOR THE INFORMATION IT CONTAINS MAY BE USED BY OR DISCLOSED TO ANY THIRD PARTY WITHOUT DELL'S EXPRESS WRITTEN CONSENT.

Compal Electronics, Inc.

Title: SATA HDD1 & HDD2

Size | Document Number: LA-6601P | Rev: 1.0

Date: Tuesday, November 30, 2010 | Sheet 36 of 63

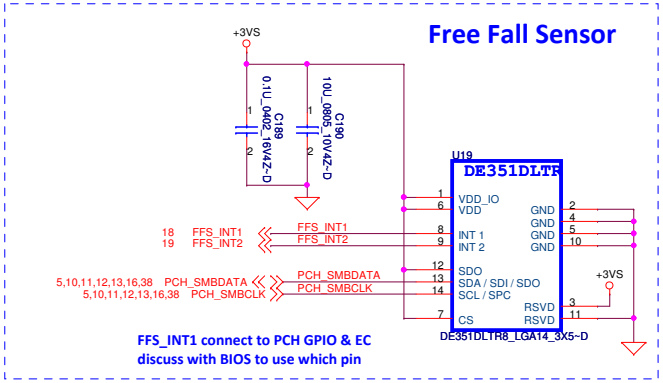

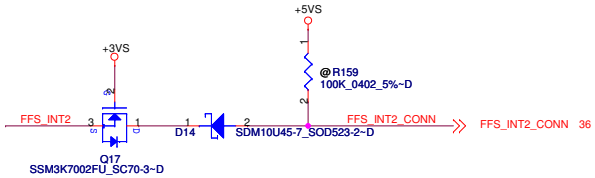

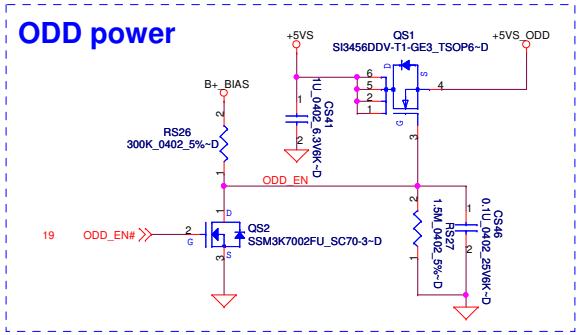

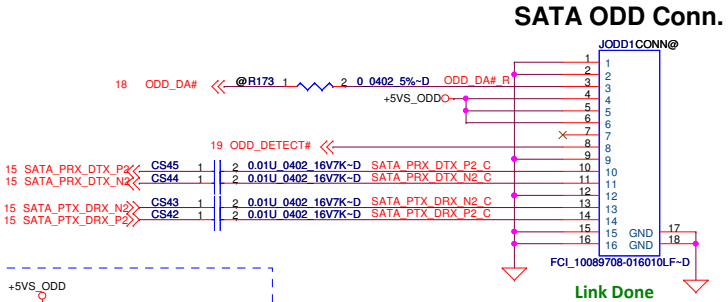

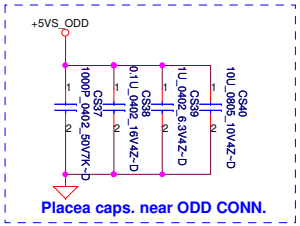

PROPRIETARY NOTE: THIS SHEET OF ENGINEERING DRAWINGS AND SPECIFICATIONS CONTAINS CONFIDENTIAL, TRADE SECRET, AND OTHER PROPRIETARY INFORMATION OF DELL. ("DELL"). THIS DOCUMENT MAY NOT BE TRANSFERRED OR COPIED WITHOUT THE EXPRESS WRITTEN AUTHORIZATION OF DELL. IN ADDITION, NEITHER THIS SHEET NOR THE INFORMATION IT CONTAINS MAY BE USED BY OR DISCLOSED TO ANY THIRD PARTY WITHOUT DELL'S EXPRESS WRITTEN CONSENT.

DELL CONFIDENTIAL/PROPRIETARY

Compal Electronics, Inc.

Title: SATA HDD3 & ODD & FFS

Size | Document Number: LA-6601P | Rev 1.0

Date: Tuesday, November 30, 2010 | Sheet 37 of 63

WLAN

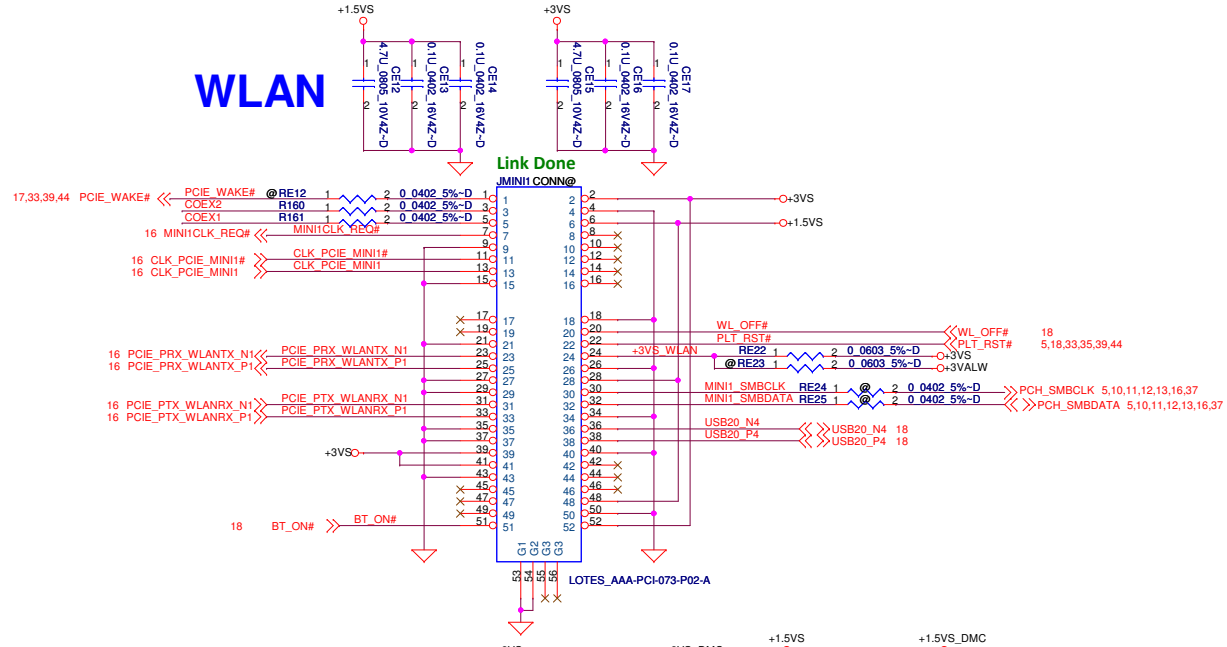

Bluetooth

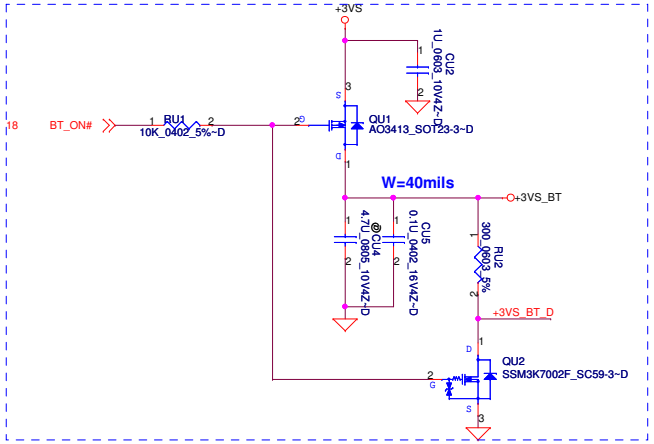

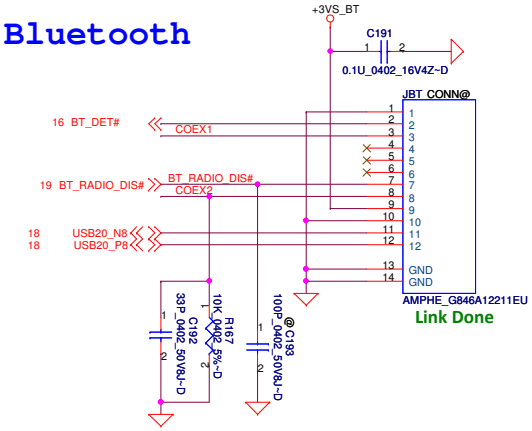

Display Mini Card (DMC)

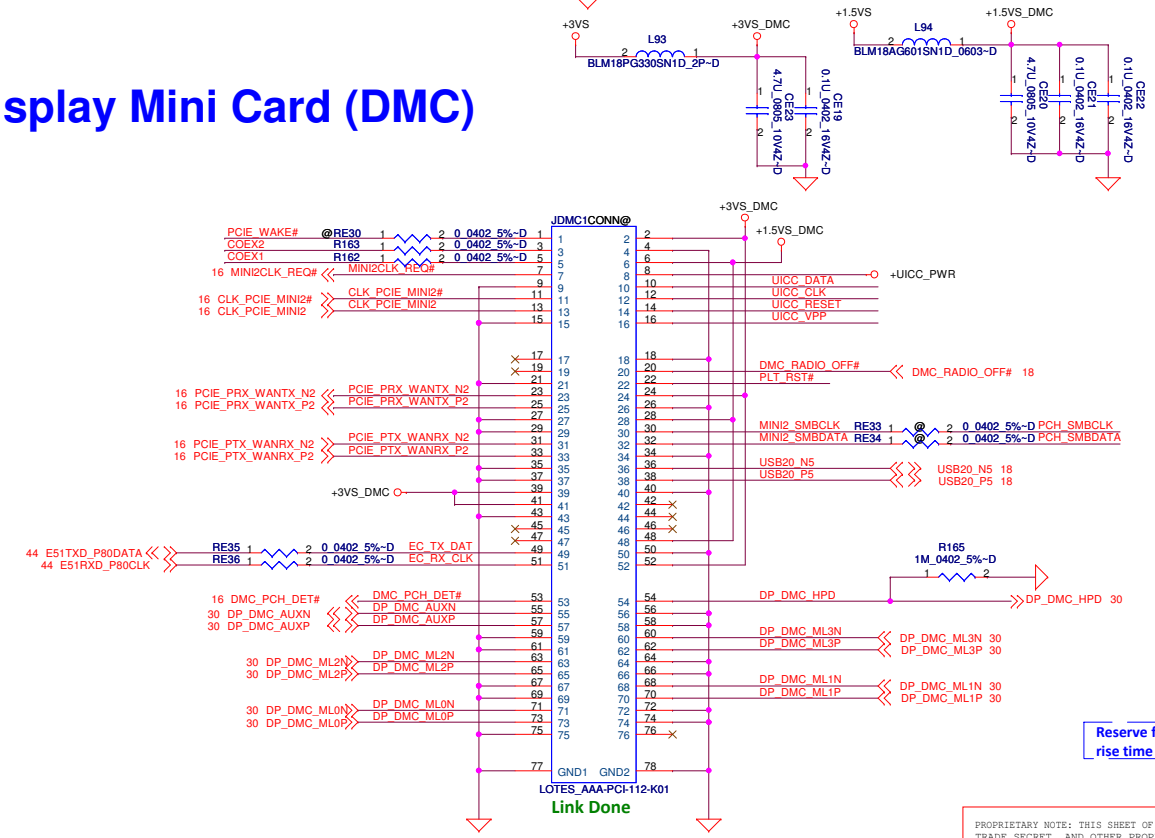

For ESD Cap close to JSIM1

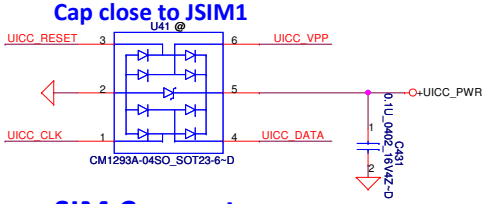

SIM Connector

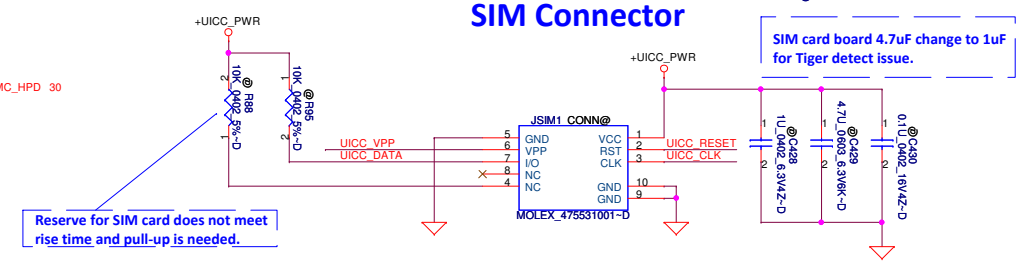

PROPRIETARY NOTE: THIS SHEET OF ENGINEERING DRAWINGS AND SPECIFICATIONS CONTAINS CONFIDENTIAL, TRADE SECRET, AND OTHER PROPRIETARY INFORMATION OF DELL. ("DELL"). THIS DOCUMENT MAY NOT BE TRANSFERRED OR COPIED WITHOUT THE EXPRESS WRITTEN AUTHORIZATION OF DELL. IN ADDITION, NEITHER THIS SHEET NOR THE INFORMATION IT CONTAINS MAY BE USED BY OR DISCLOSED TO ANY THIRD PARTY WITHOUT DELL'S EXPRESS WRITTEN CONSENT.

Compal Electronics, Inc.		
Title: Mini Card WLAN / DMC / BT		
Size	Document Number: LA-6601P	Rev 1.0
Date: Tuesday, November 30, 2010	Sheet 38 of 63	

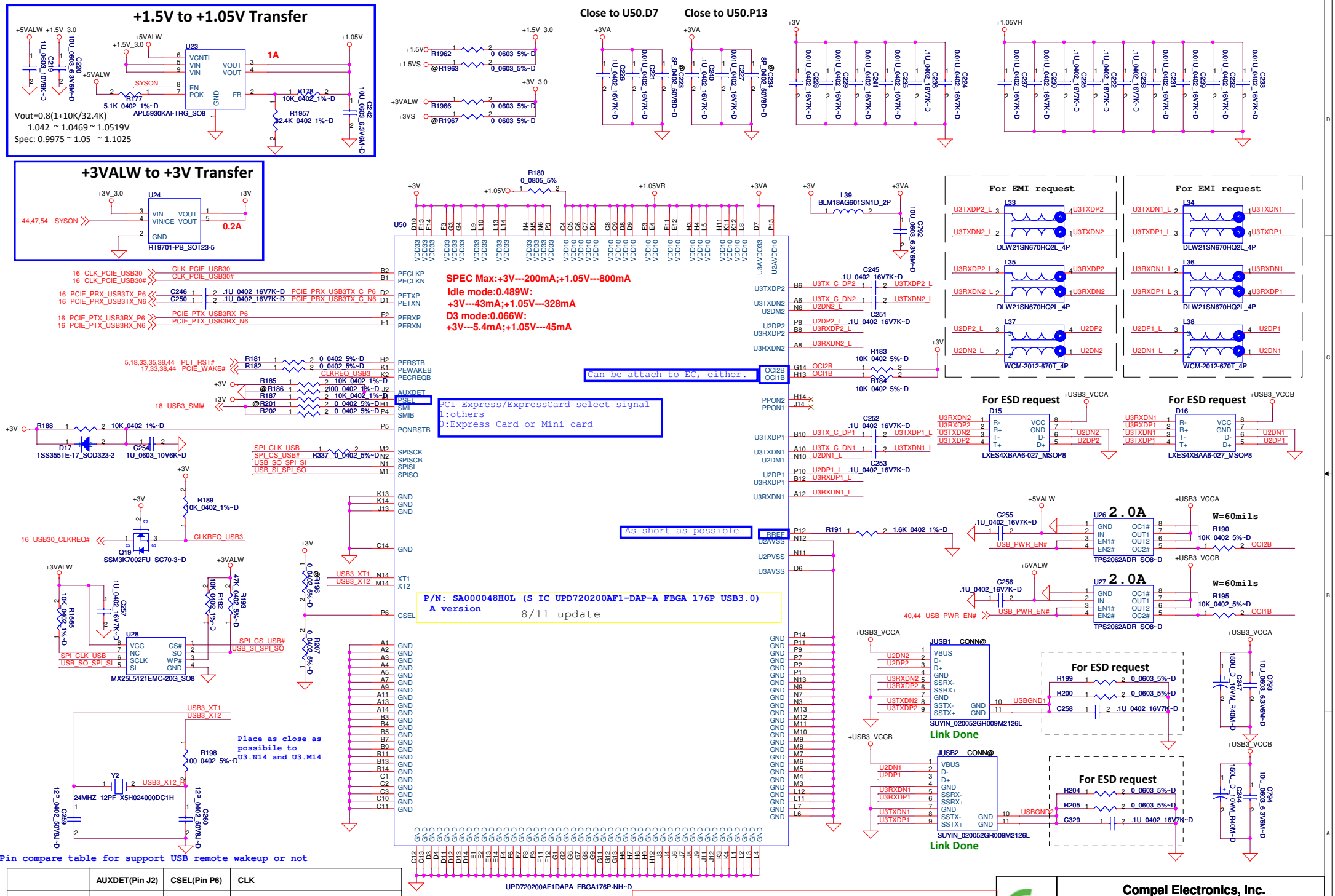

Pin compare table for support USB remote wakeup or not

	AUXDET(Pin J2)	CSEL(Pin P6)	CLK
Support USB remote wakeup	pull high 10k to VDD33	Tied to GND	Must use 24MHz crystal: mount Y1,R19,C40,C41
Not support USB remote wakeup	Tied to GND	pull high to VDD33	Can use either 48MHz or 24MHz When use 48MHz clock: mount R22,R25

PROPRIETARY NOTE: THIS SHEET OF ENGINEERING DRAWINGS AND SPECIFICATIONS CONTAINS CONFIDENTIAL, TRADE SECRET, AND OTHER PROPRIETARY INFORMATION OF DELL. ("DELL"). THIS DOCUMENT MAY NOT BE TRANSFERRED OR COPIED WITHOUT THE EXPRESS WRITTEN AUTHORIZATION OF DELL. IN ADDITION, NEITHER THIS SHEET NOR THE INFORMATION IT CONTAINS MAY BE USED BY OR DISCLOSED TO ANY THIRD PARTY WITHOUT DELL'S EXPRESS WRITTEN CONSENT.

Compal Electronics, Inc.
Title: USB3.0 PD720200
Size: Document Number: LA-6601P Rev 1.0
Date: Tuesday, November 30, 2010 Sheet 39 of 63

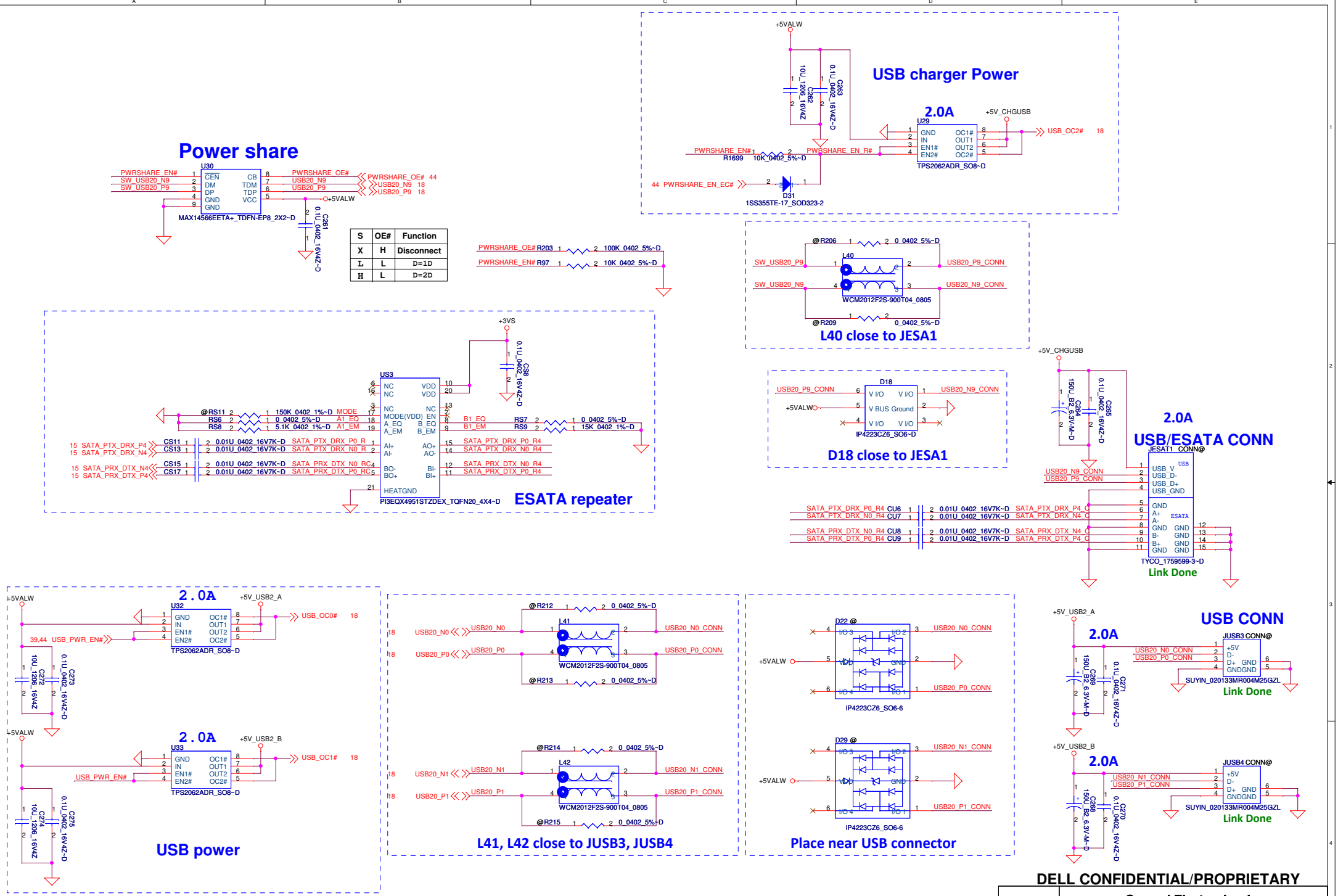

DELL CONFIDENTIAL/PROPRIETARY

PROPRIETARY NOTE: THIS SHEET OF ENGINEERING DRAWINGS AND SPECIFICATIONS CONTAINS CONFIDENTIAL, TRADE SECRET, AND OTHER PROPRIETARY INFORMATION OF DELL. ("DELL"). THIS DOCUMENT MAY NOT BE TRANSFERRED OR COPIED WITHOUT THE EXPRESS WRITTEN AUTHORIZATION OF DELL. IN ADDITION, NEITHER THIS SHEET NOR THE INFORMATION IT CONTAINS MAY BE USED BY OR DISCLOSED TO ANY THIRD PARTY WITHOUT DELL'S EXPRESS WRITTEN CONSENT.

Compal Electronics, Inc.	
Title	USB/ESATA TS3USB221RSER
Size	Document Number: LA-6601P
Rev	1.0
Date: Tuesday, November 30, 2010	Sheet 40 of 63

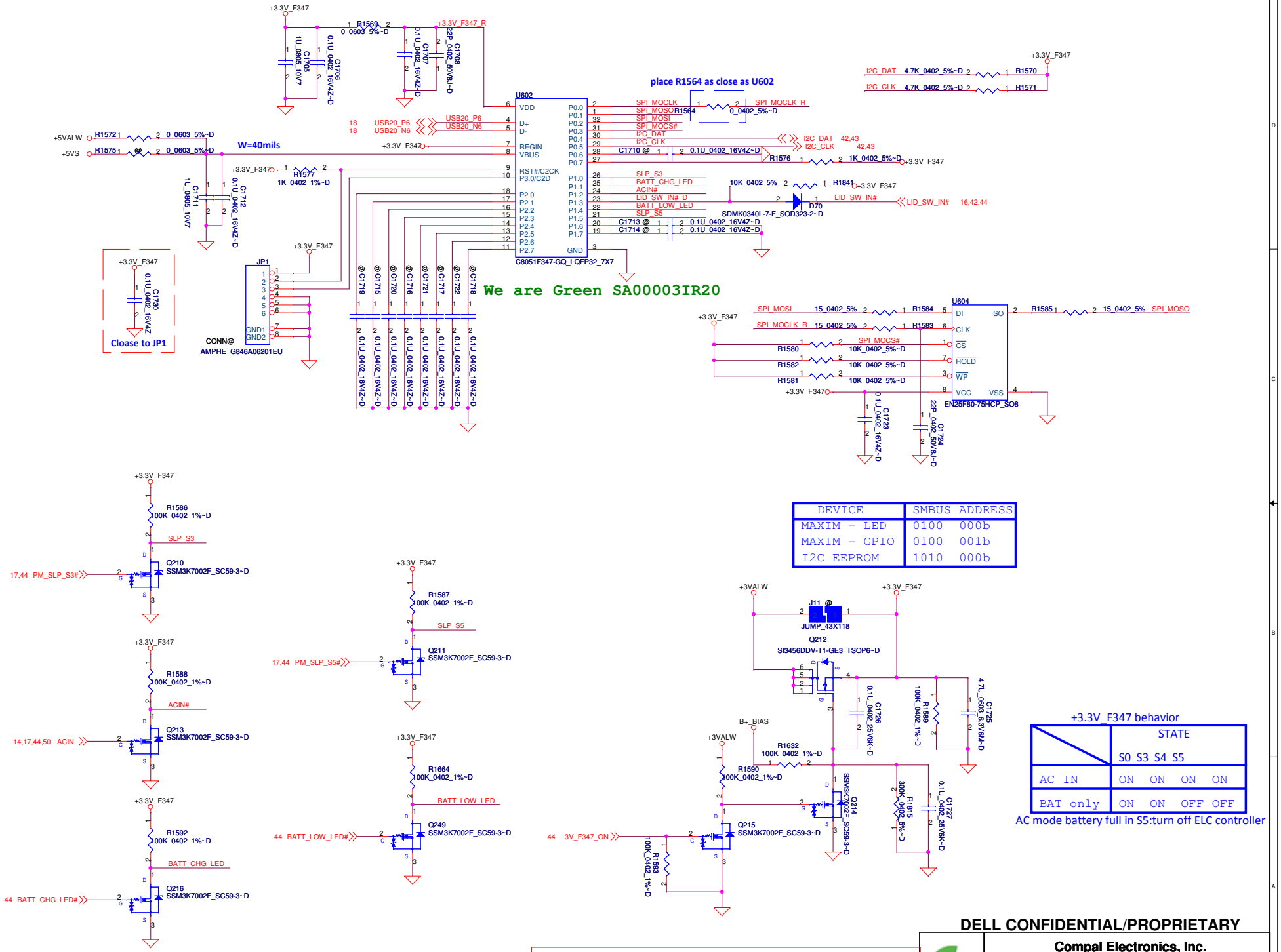

DEVICE	SMBUS ADDRESS	
MAXIM - LED	0100	000b
MAXIM - GPIO	0100	001b
I2C EEPROM	1010	000b

+3.3V_F347 behavior

	STATE			
	S0	S3	S4	S5
AC IN	ON	ON	ON	ON
BAT only	ON	ON	OFF	OFF

AC mode battery full in S5:turn off ELC controller

PROPRIETARY NOTE: THIS SHEET OF ENGINEERING DRAWINGS AND SPECIFICATIONS CONTAINS CONFIDENTIAL, TRADE SECRET, AND OTHER PROPRIETARY INFORMATION OF DELL. ("DELL"). THIS DOCUMENT MAY NOT BE TRANSFERRED OR COPIED WITHOUT THE EXPRESS WRITTEN AUTHORIZATION OF DELL. IN ADDITION, NEITHER THIS SHEET NOR THE INFORMATION IT CONTAINS MAY BE USED BY OR DISCLOSED TO ANY THIRD PARTY WITHOUT DELL'S EXPRESS WRITTEN CONSENT.

DELL CONFIDENTIAL/PROPRIETARY

Compal Electronics, Inc.

Title: ELC (1)

Size: | Document Number: LA-6601P | Rev: 1.0

Date: Tuesday, November 30, 2010 | Sheet 41 of 63

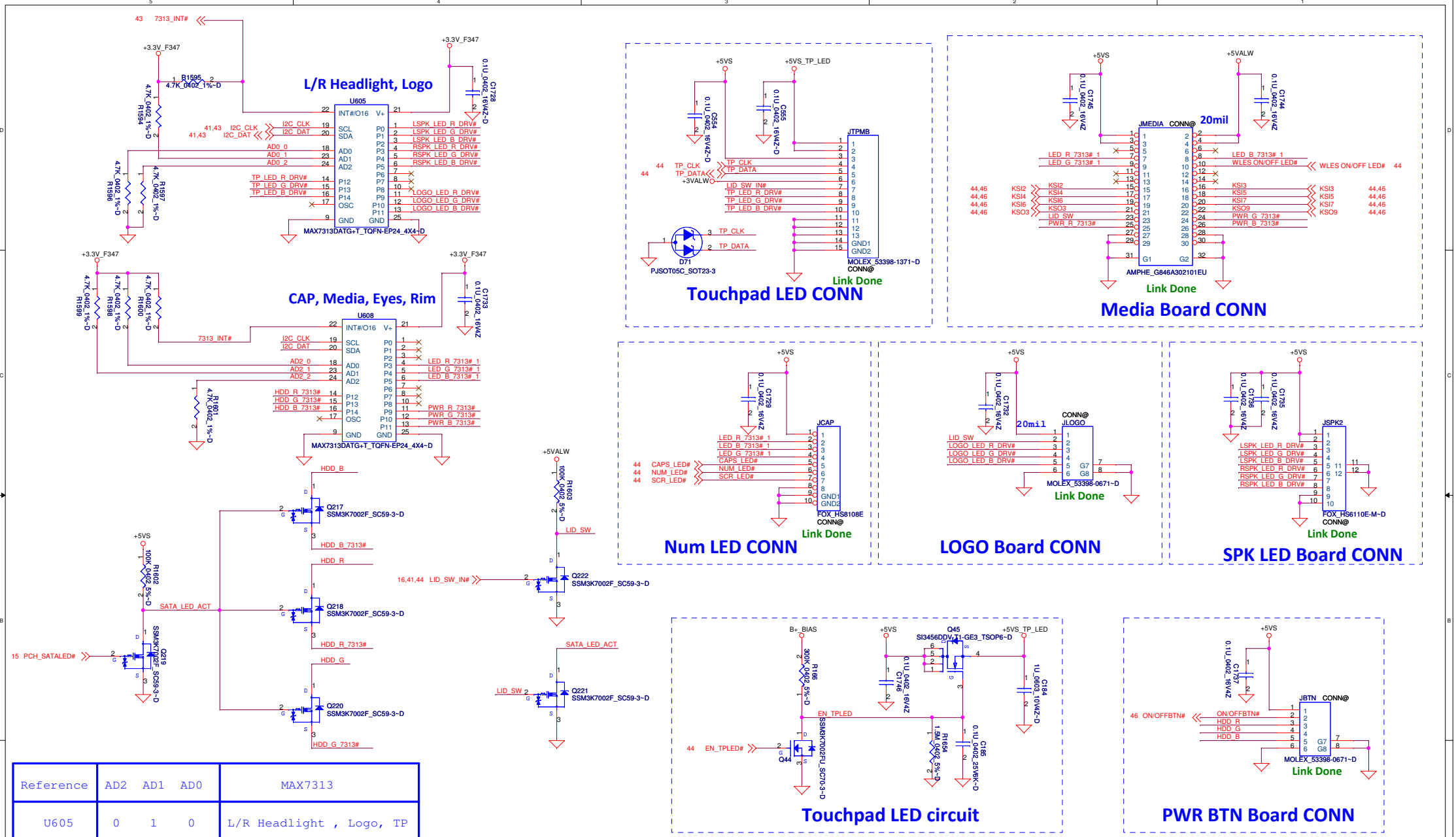

Reference	AD2	AD1	AD0	MAX7313
U605	0	1	0	L/R Headlight , Logo, TP
U608	0	1	1	Num, CAP , SCR EJECT, REV, PLAY/PAUSE FFWD, Vol_DWN, Vol_UP Wireless ON/OFF AWCC Button Alien Adrenaline Power Button Eyes Power Button Rim

DELL CONFIDENTIAL/PROPRIETARY

PROPRIETARY NOTE: THIS SHEET OF ENGINEERING DRAWINGS AND SPECIFICATIONS CONTAINS CONFIDENTIAL, TRADE SECRET, AND OTHER PROPRIETARY INFORMATION OF DELL. ("DELL"). THIS DOCUMENT MAY NOT BE TRANSFERRED OR COPIED WITHOUT THE EXPRESS WRITTEN AUTHORIZATION OF DELL. IN ADDITION, NEITHER THIS SHEET NOR THE INFORMATION IT CONTAINS MAY BE USED BY OR DISCLOSED TO ANY THIRD PARTY WITHOUT DELL'S EXPRESS WRITTEN CONSENT.

Compal Electronics, Inc.
Title: ELC (2)
Size: Document Number: LA-6601P
Rev: 1.0
Date: Tuesday, November 30, 2010
Sheet 42 of 63

K/B Backlight

AD2	AD1	AD0
0	0	1

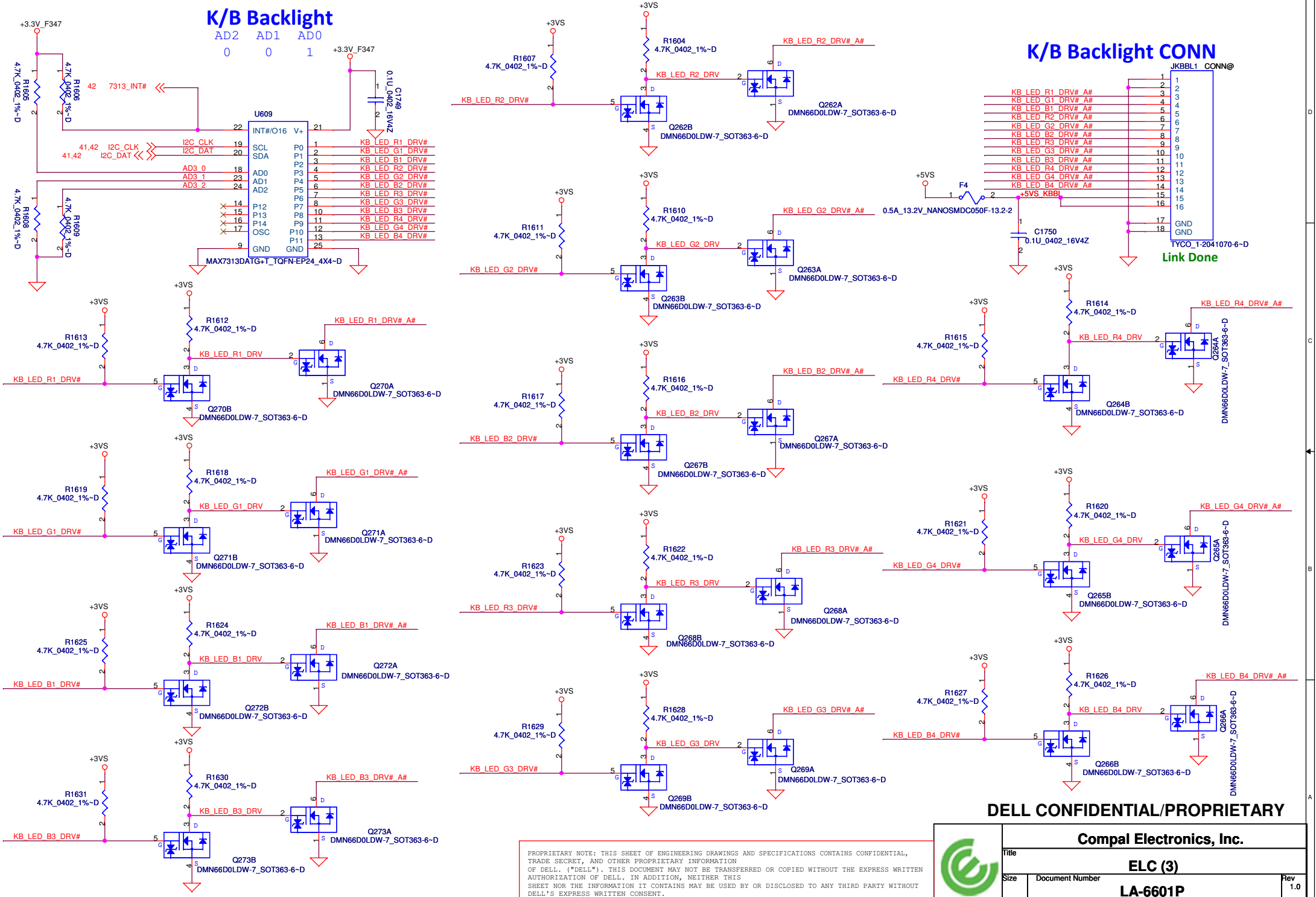

DELL CONFIDENTIAL/PROPRIETARY

PROPRIETARY NOTE: THIS SHEET OF ENGINEERING DRAWINGS AND SPECIFICATIONS CONTAINS CONFIDENTIAL, TRADE SECRET, AND OTHER PROPRIETARY INFORMATION OF DELL. ("DELL"). THIS DOCUMENT MAY NOT BE TRANSFERRED OR COPIED WITHOUT THE EXPRESS WRITTEN AUTHORIZATION OF DELL. IN ADDITION, NEITHER THIS SHEET NOR THE INFORMATION IT CONTAINS MAY BE USED BY OR DISCLOSED TO ANY THIRD PARTY WITHOUT DELL'S EXPRESS WRITTEN CONSENT.

Compal Electronics, Inc.			
Title: ELC (3)			
Size	Document Number: LA-6601P		Rev 1.0
Date: Tuesday, November 30, 2010	Sheet 43 of 63		

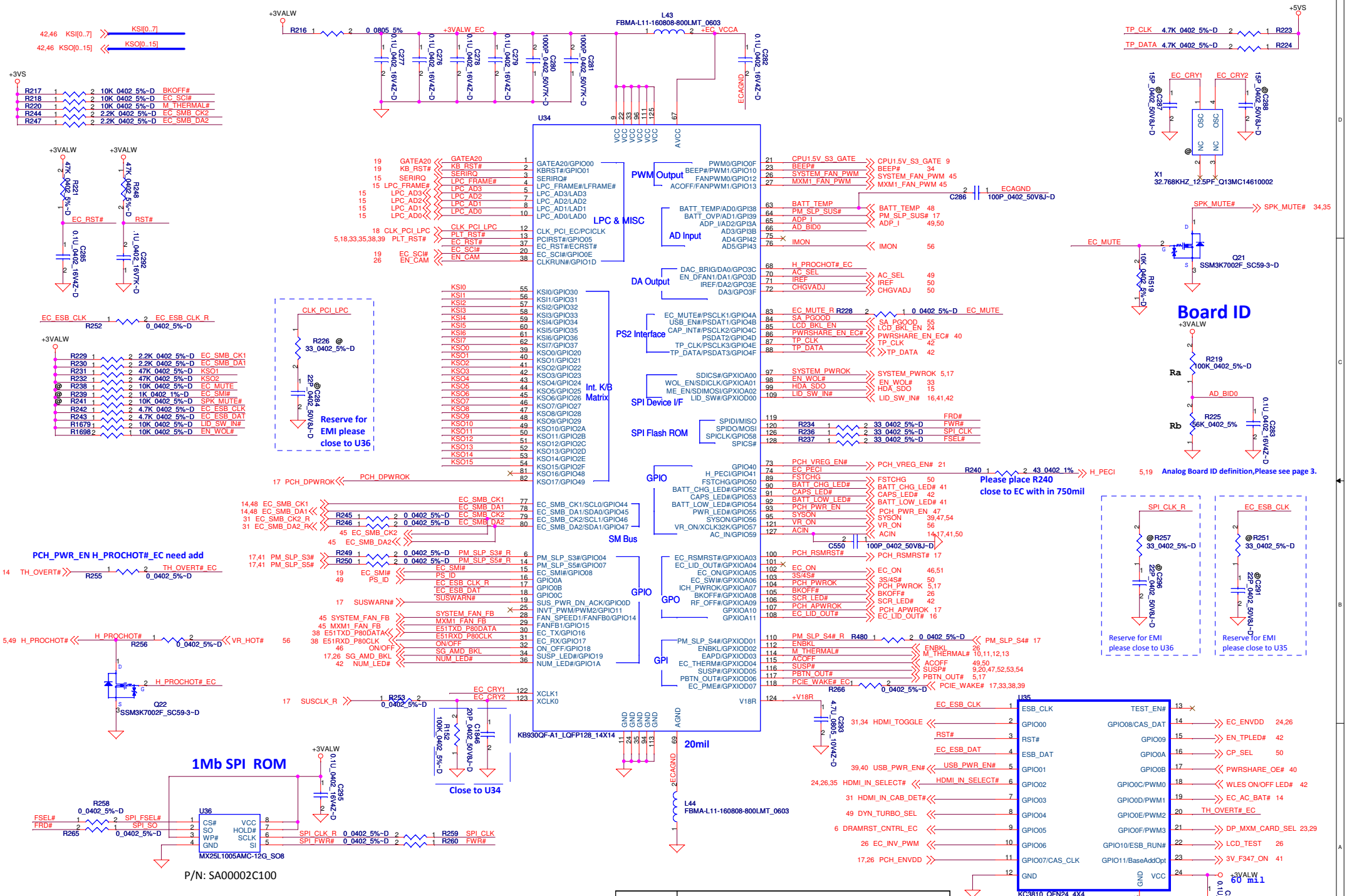
U34
KB930QF-A1_LQFP128_14X14
PWM Output
LPC & MISC
AD Input
DA Output
PS2 Interface
Int. K/B Matrix
SPI Device I/F
SPI Flash ROM
GPIO
SM Bus
GPO
GPI
20mil
Board ID
Analog Board ID definition,Please see page 3.
Please place R240 close to EC in 750mil
Reserve for EMI please close to U36
Reserve for EMI please close to U35
Reserve for EMI please close to U34
Reserve for EMI please close to U36
PCH_PWR_EN H_PROCHOT#_EC need add
1Mb SPI ROM
U36
MX25L1005AMC-12G_SO8
P/N: SA00002C100
U35
KC3810_QFN24_4X4
60 mil
Compal Electronics, Inc.
EC ENE-KB930
LA-6601P
Rev 1.0
Tuesday, November 30, 2010
Sheet 44 of 63

System FAN Controller

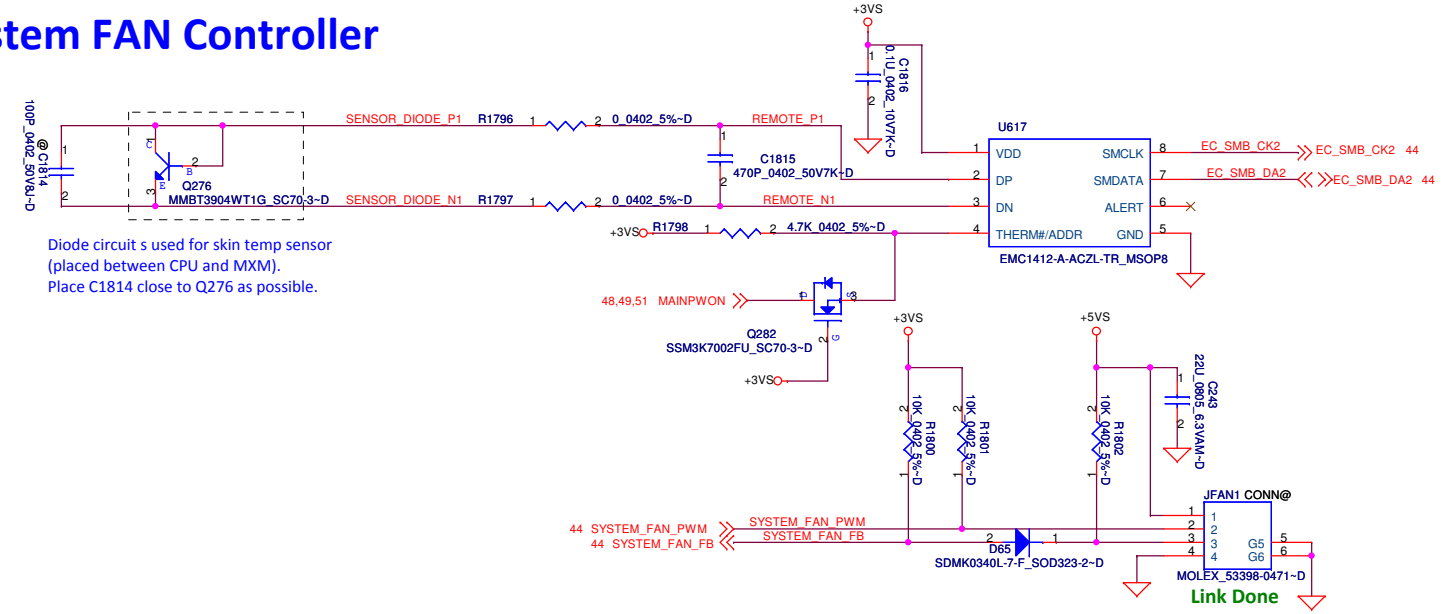

Diode circuit s used for skin temp sensor
(placed between CPU and MXM).
Place C1814 close to Q276 as possible.

MXM1 FAN Controller

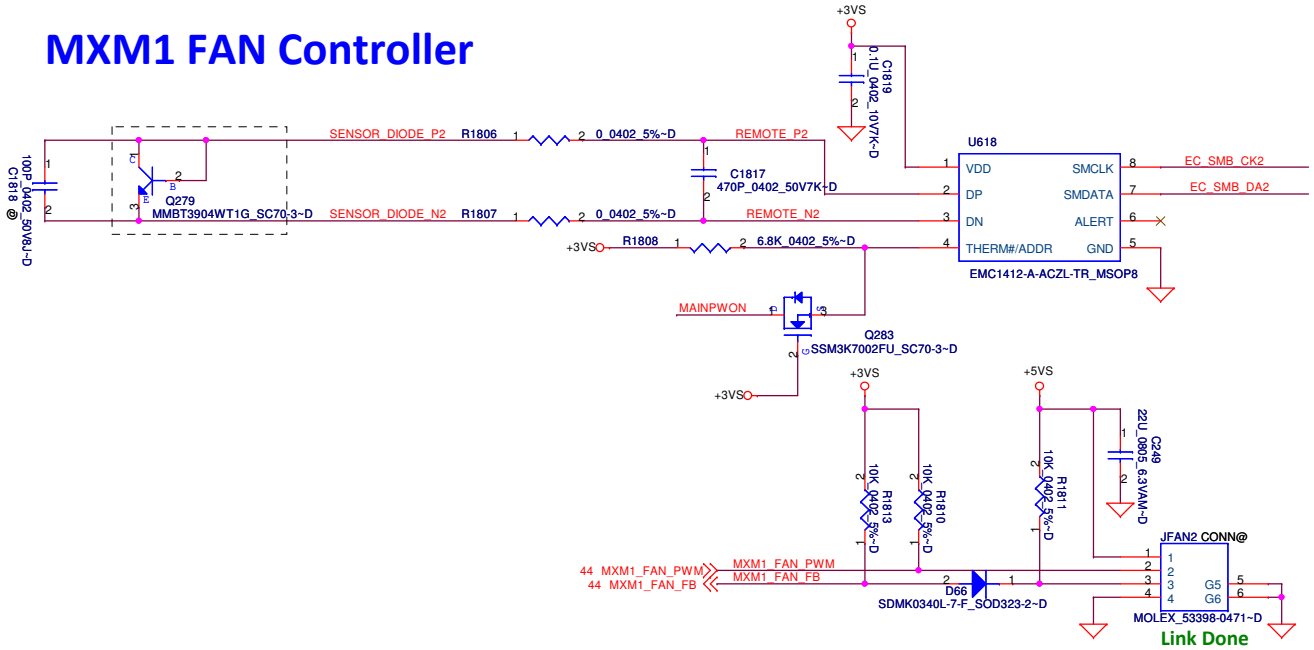

DELL CONFIDENTIAL/PROPRIETARY

PROPRIETARY NOTE: THIS SHEET OF ENGINEERING DRAWINGS AND SPECIFICATIONS CONTAINS CONFIDENTIAL, TRADE SECRET, AND OTHER PROPRIETARY INFORMATION OF DELL. ("DELL"). THIS DOCUMENT MAY NOT BE TRANSFERRED OR COPIED WITHOUT THE EXPRESS WRITTEN AUTHORIZATION OF DELL. IN ADDITION, NEITHER THIS SHEET NOR THE INFORMATION IT CONTAINS MAY BE USED BY OR DISCLOSED TO ANY THIRD PARTY WITHOUT DELL'S EXPRESS WRITTEN CONSENT.

Compal Electronics, Inc.	
Title	Thermal Sensor & FAN
Size	Document Number: LA-6601P
Rev	1.0
Date: Tuesday, November 30, 2010	Sheet 45 of 63

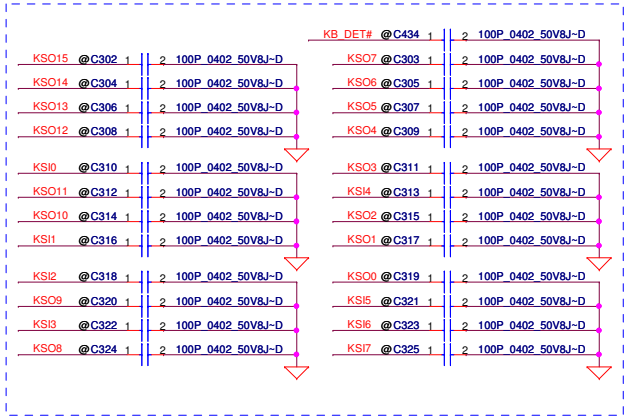

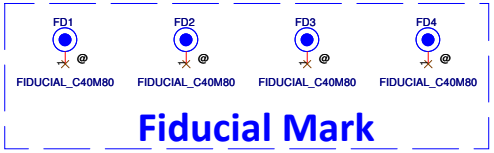

Fiducial Mark

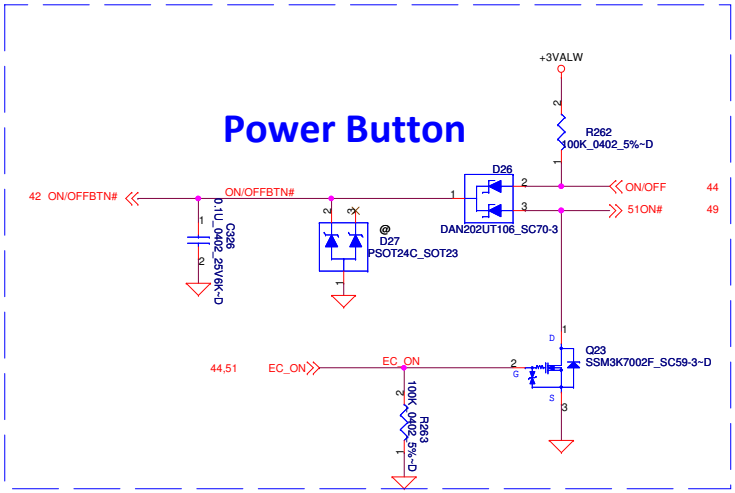

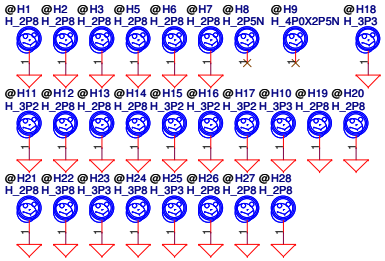

INT_KBD Conn.

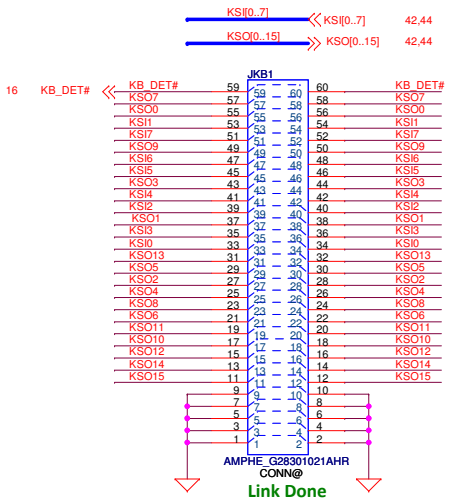

IR SENSOR connector

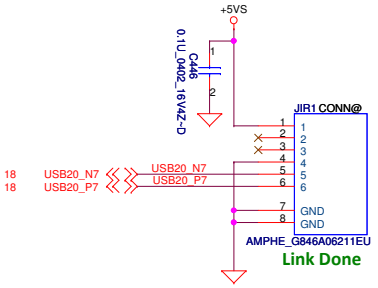

PROPRIETARY NOTE: THIS SHEET OF ENGINEERING DRAWINGS AND SPECIFICATIONS CONTAINS CONFIDENTIAL, TRADE SECRET, AND OTHER PROPRIETARY INFORMATION OF DELL. ("DELL"). THIS DOCUMENT MAY NOT BE TRANSFERRED OR COPIED WITHOUT THE EXPRESS WRITTEN AUTHORIZATION OF DELL. IN ADDITION, NEITHER THIS SHEET NOR THE INFORMATION IT CONTAINS MAY BE USED BY OR DISCLOSED TO ANY THIRD PARTY WITHOUT DELL'S EXPRESS WRITTEN CONSENT.

DELL CONFIDENTIAL/PROPRIETARY

Compal Electronics, Inc.

Title: KB & Power Button & IR

Size | Document Number: LA-6601P | Rev 1.0

Date: Tuesday, November 30, 2010 | Sheet 46 of 63

DC to DC

+5VALW to +5VS

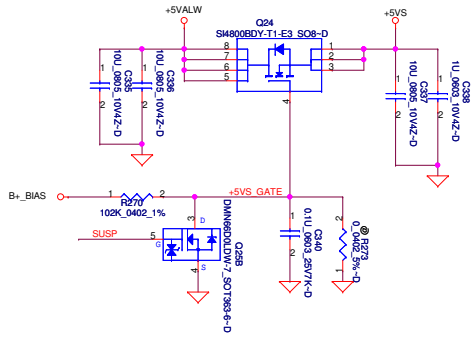

+3VALW to +3V_PCH

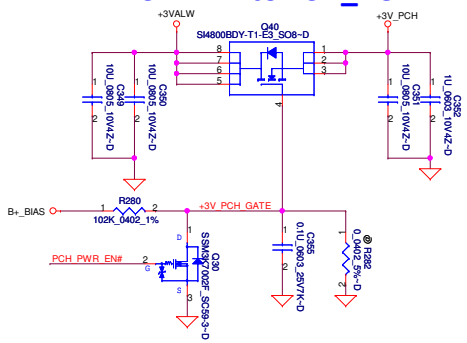

+3VALW to +3VMXM Transfer

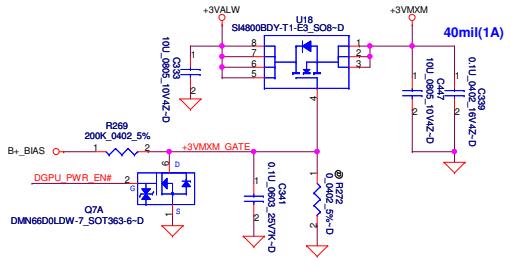

+3VALW to +3VS

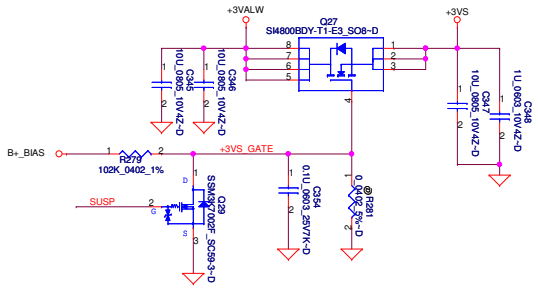

+1.5V To +1.5VS

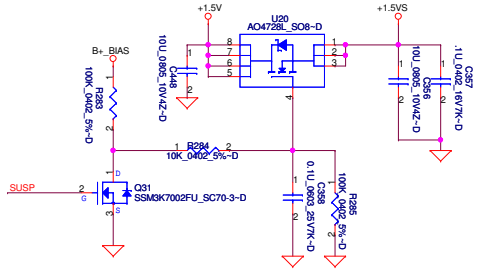

+5VALW to +5VMXM

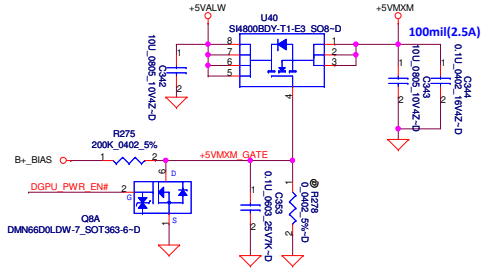

Discharge Circuit

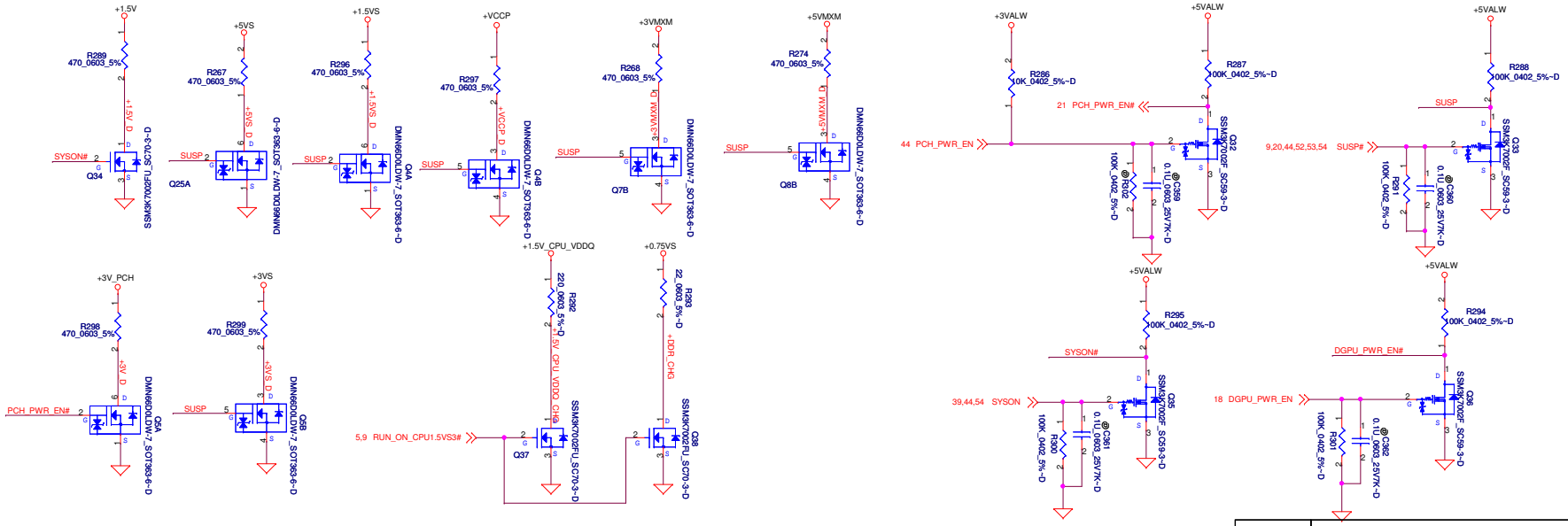

PROPRIETARY NOTE: THIS SHEET OF ENGINEERING DRAWINGS AND SPECIFICATIONS CONTAINS CONFIDENTIAL, TRADE SECRET, AND OTHER PROPRIETARY INFORMATION OF DELL. ("DELL"). THIS DOCUMENT MAY NOT BE TRANSFERRED OR COPIED WITHOUT THE EXPRESS WRITTEN AUTHORIZATION OF DELL. IN ADDITION, NEITHER THIS SHEET NOR THE INFORMATION IT CONTAINS MAY BE USED BY OR DISCLOSED TO ANY THIRD PARTY WITHOUT DELL'S EXPRESS WRITTEN CONSENT.

Compal Electronics, Inc.			
Title: DC/DC Interface			
Size	Document Number: LA-6601P		Rev: 1.0
Date: Tuesday, November 30, 2010	Sheet 47 of 63		

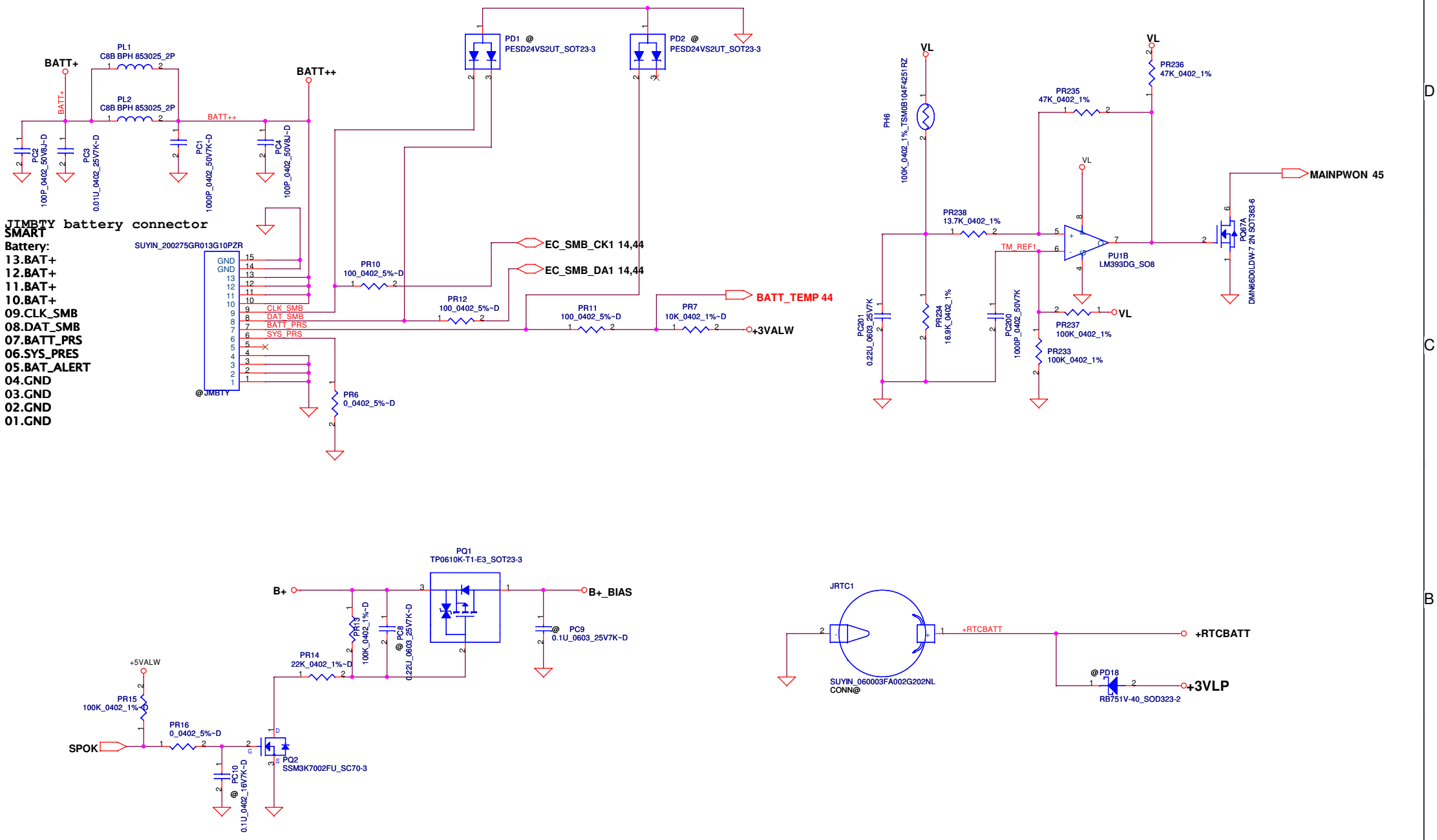

PROPRIETARY NOTE: THIS SHEET OF ENGINEERING DRAWING AND SPECIFICATIONS CONTAINS CONFIDENTIAL TRADE SECRET AND OTHER PROPRIETARY INFORMATION OF DELL INC. ("DELL") THIS DOCUMENT MAY NOT BE TRANSFERRED OR COPIED WITHOUT THE EXPRESS WRITTEN AUTHORIZATION OF DELL. IN ADDITION, NEITHER THIS SHEET NOR THE INFORMATION IT CONTAINS WAY BE USED BY OR DISCLOSED TO ANY THIRD PARTY WITHOUT DELL'S EXPRESS WRITTEN CONSENT.

Compal Electronics, Inc.	
Title	BATTERY CONN/OTP
Size	Document Number: LA-6601P
Rev	0.3
Date: Tuesday, November 30, 2010	Sheet 48 of 63

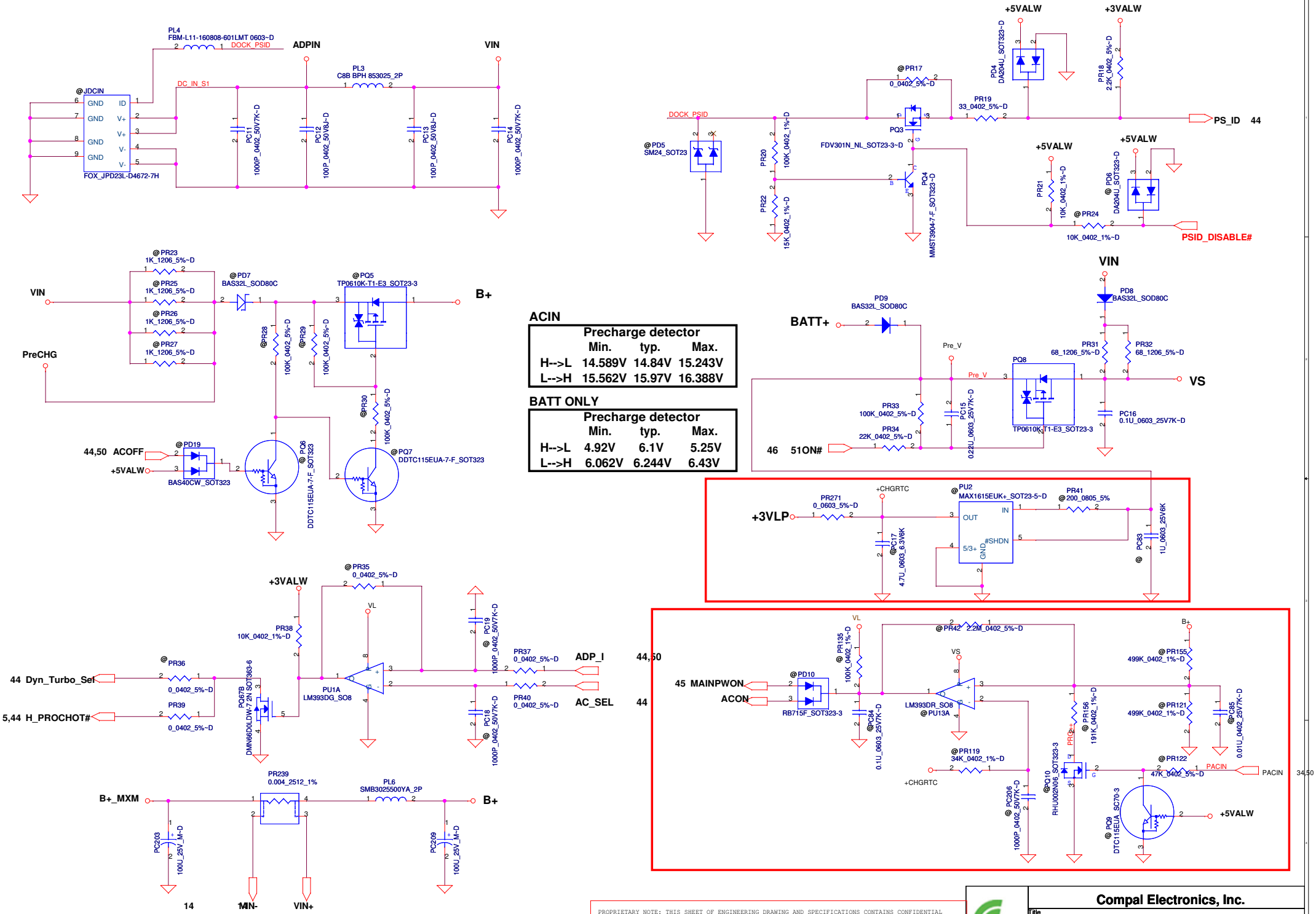

PROPRIETARY NOTE: THIS SHEET OF ENGINEERING DRAWING AND SPECIFICATIONS CONTAINS CONFIDENTIAL TRADE SECRET AND OTHER PROPRIETARY INFORMATION OF DELL INC. ("DELL") THIS DOCUMENT MAY NOT BE TRANSFERRED OR COPIED WITHOUT THE EXPRESS WRITTEN AUTHORIZATION OF DELL. IN ADDITION, NEITHER THIS SHEET NOR THE INFORMATION IT CONTAINS WAY BE USED BY OR DISCLOSED TO ANY THIRD PARTY WITHOUT DELL'S EXPRESS WRITTEN CONSENT.

Compal Electronics, Inc.	
Title	DCIN & DETECTOR
Size	Document Number: LA-6601P
Rev	0.3
Date: Tuesday, November 30, 2010	Sheet 49 of 63

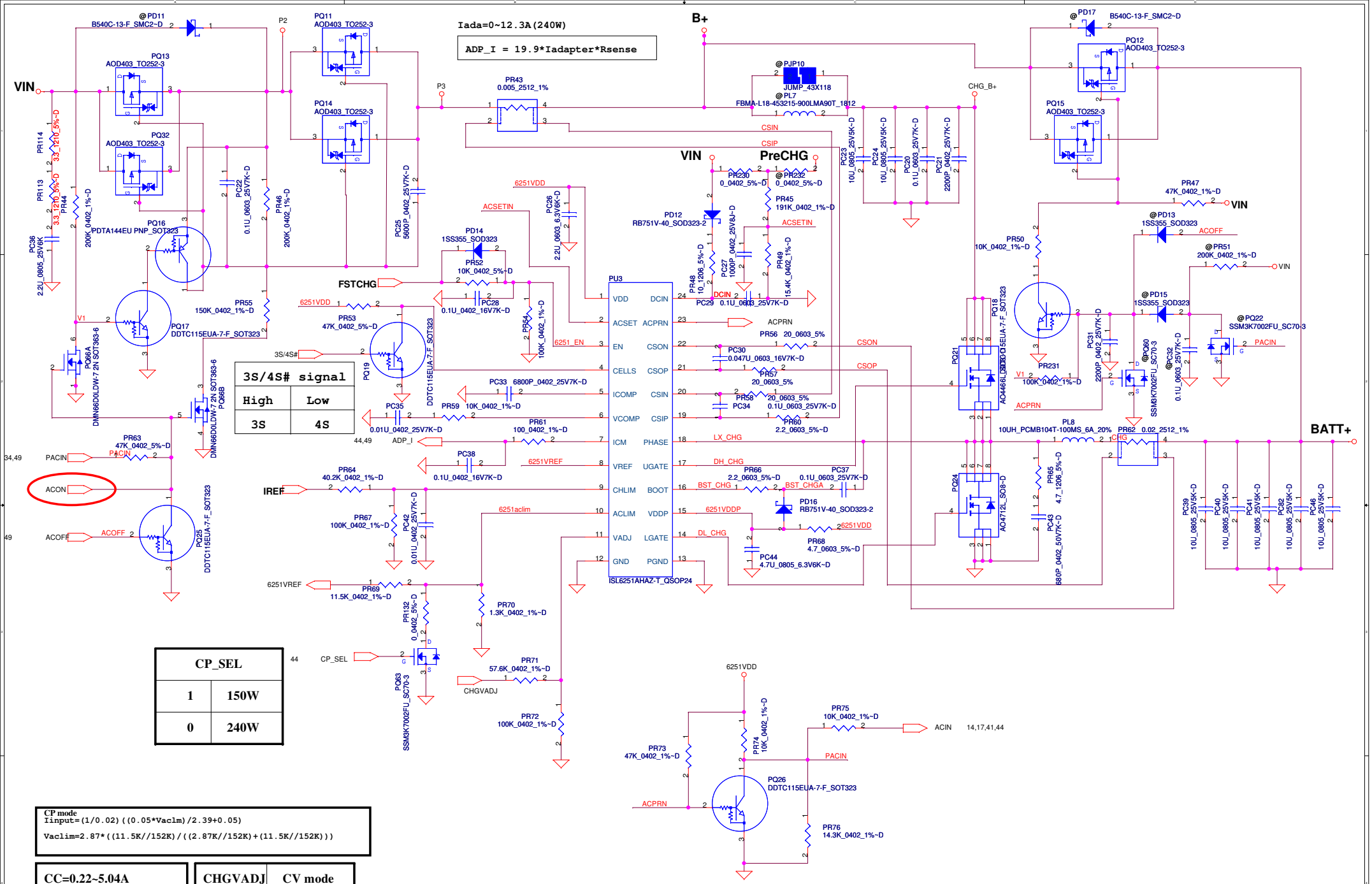

PROPRIETARY NOTE: THIS SHEET OF ENGINEERING DRAWING AND SPECIFICATIONS CONTAINS CONFIDENTIAL TRADE SECRET AND OTHER PROPRIETARY INFORMATION OF DELL INC. ("DELL") THIS DOCUMENT MAY NOT BE TRANSFERRED OR COPIED WITHOUT THE EXPRESS WRITTEN AUTHORIZATION OF DELL. IN ADDITION, NEITHER THIS SHEET NOR THE INFORMATION IT CONTAINS WAY BE USED BY OR DISCLOSED TO ANY THIRD PARTY WITHOUT DELL'S EXPRESS WRITTEN CONSENT.

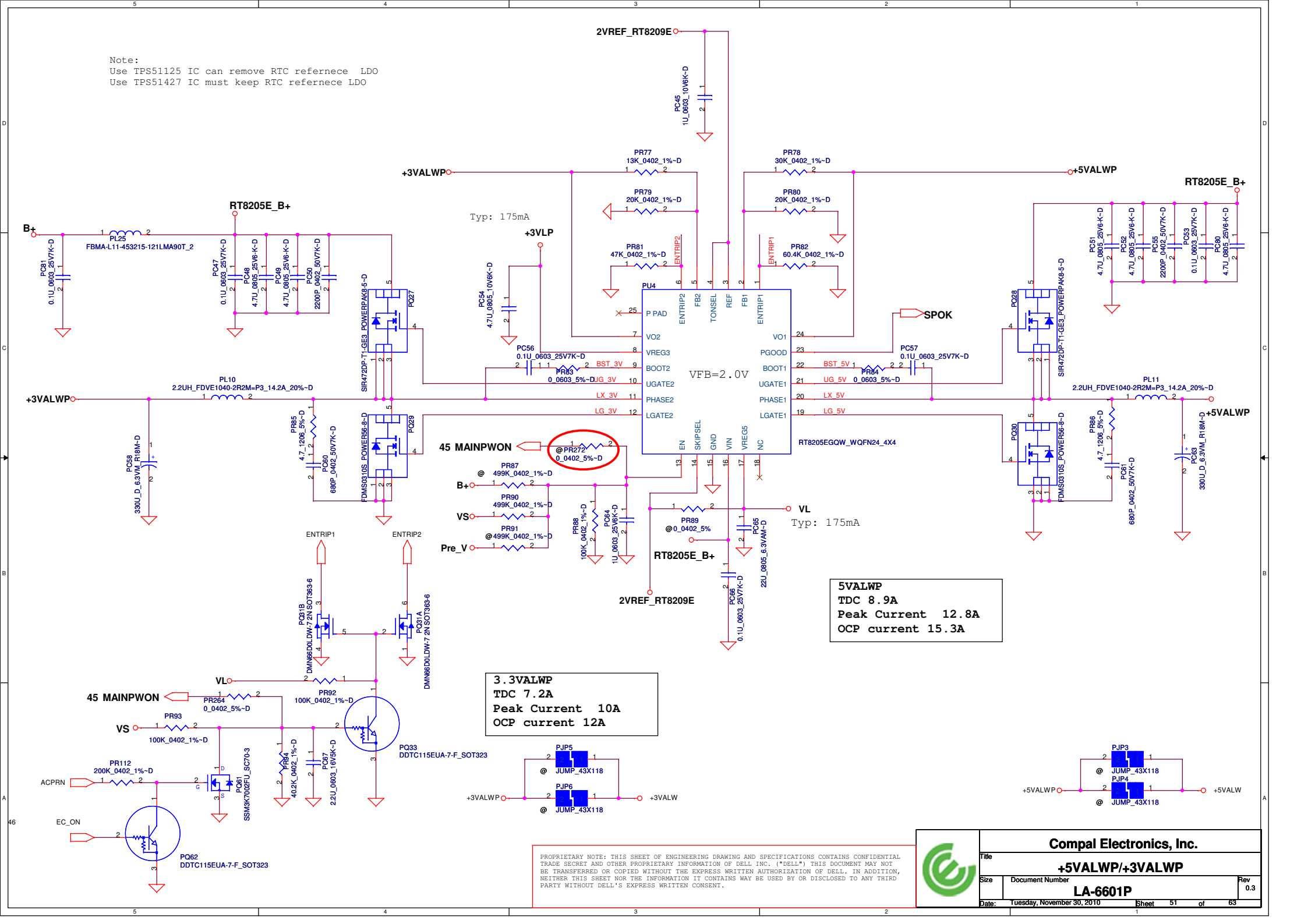
Note:
Use TPS51125 IC can remove RTC refernece LDO
Use TPS51427 IC must keep RTC refernece LDO
2VREF_RT8209E
PC45 1U_0603_10V6K~D
+3VALWP
PR77 13K_0402_1%~D
PR78 30K_0402_1%~D
+5VALWP
RT8205E_B+
PR79 20K_0402_1%~D
PR80 20K_0402_1%~D
Typ: 175mA
+3VLP
PR81 47K_0402_1%~D
PR82 60.4K_0402_1%~D
B+
PL25 FBMA-L11-453215-121LMA90T_2
PC81 0.1U_0603_25V7K~D
PC47 0.1U_0603_25V7K~D
PC48 4.7U_0805_25V6-K~D
PC49 4.7U_0805_25V6-K~D
PC50 2200P_0402_50V7K~D
PC54 4.7U_0805_10V6K~D
PU4
P PAD
VO2
VREG3
BOOT2
UGATE2
PHASE2
LGATE2
EN
SKIPSEL
GND
VIN
VREG5
NC
VO1
PGOOD
BOOT1
UGATE1
PHASE1
LGATE1
ENTRIP2
FB2
TONSEL
REF
FB1
ENTRIP1
RT8205EGQW_WQFN24_4X4
VFB=2.0V
SPOK
PC56 0.1U_0603_25V7K~D
PR83 0_0603_5%~D
BST_3V
UG_3V
LX_3V
LG_3V
PC57 0.1U_0603_25V7K~D
PR84 0_0603_5%~D
BST_5V
UG_5V
LX_5V
LG_5V
PC51 4.7U_0805_25V6-K~D
PC52 4.7U_0805_25V6-K~D
PC55 2200P_0402_50V7K~D
PC53 0.1U_0603_25V7K~D
PC80 4.7U_0805_25V6-K~D
PQ27 SIR472DP-T1-GE3_POWERPAK8-5-D
PQ28 SIR472DP-T1-GE3_POWERPAK8-5-D
PQ29 FDMS0310S_POWERS6-8-D
PQ30 FDMS0310S_POWERS6-8-D
PL10 2.2UH_FDVE1040-2R2M=P3_14.2A_20%~D
PL11 2.2UH_FDVE1040-2R2M=P3_14.2A_20%~D
PR85 4.7_1206_5%~D
PC60 680P_0402_50V7K~D
PC58 330U_D_6.3VM_R18M~D
PR86 4.7_1206_5%~D
PC61 680P_0402_50V7K~D
PC63 330U_D_6.3VM_R18M~D
45 MAINPWON
@PR272 0_0402_5%~D
PR87 @ 499K_0402_1%~D
PR90 499K_0402_1%~D
PR91 @499K_0402_1%~D
PR88 100K_0402_1%~D
PC64 1U_0603_25V6K~D
PR89 @0_0402_5%
PC65 22U_0805_6.3VAM~D
PC66 0.1U_0603_25V7K~D
VL
Typ: 175mA
ENTRIP1
ENTRIP2
PQ31B DMN66D0LDW-7 2N SOT363-6
PQ31A DMN66D0LDW-7 2N SOT363-6
5VALWP
TDC 8.9A
Peak Current 12.8A
OCP current 15.3A
3.3VALWP
TDC 7.2A
Peak Current 10A
OCP current 12A
PR264 0_0402_5%~D
PR92 100K_0402_1%~D
PR93 100K_0402_1%~D
PQ33 DDTC115EUA-7-F_SOT323
PR112 200K_0402_1%~D
ACPRN
PQ61 SSM3K7002FU_SC70-3
PR84 40.2K_0402_1%~D
PC67 2.2U_0603_16V5K~D
EC_ON
PQ62 DDTC115EUA-7-F_SOT323
PJP5 @ JUMP_43X118
PJP6 @ JUMP_43X118
+3VALW
PJP3 @ JUMP_43X118
PJP4 @ JUMP_43X118
+5VALW
PROPRIETARY NOTE: THIS SHEET OF ENGINEERING DRAWING AND SPECIFICATIONS CONTAINS CONFIDENTIAL TRADE SECRET AND OTHER PROPRIETARY INFORMATION OF DELL INC. ("DELL") THIS DOCUMENT MAY NOT BE TRANSFERRED OR COPIED WITHOUT THE EXPRESS WRITTEN AUTHORIZATION OF DELL. IN ADDITION, NEITHER THIS SHEET NOR THE INFORMATION IT CONTAINS WAY BE USED BY OR DISCLOSED TO ANY THIRD PARTY WITHOUT DELL'S EXPRESS WRITTEN CONSENT.
Compal Electronics, Inc.
Title
+5VALWP/+3VALWP
Size
Document Number
LA-6601P
Rev 0.3
Date: Tuesday, November 30, 2010
Sheet 51 of 63

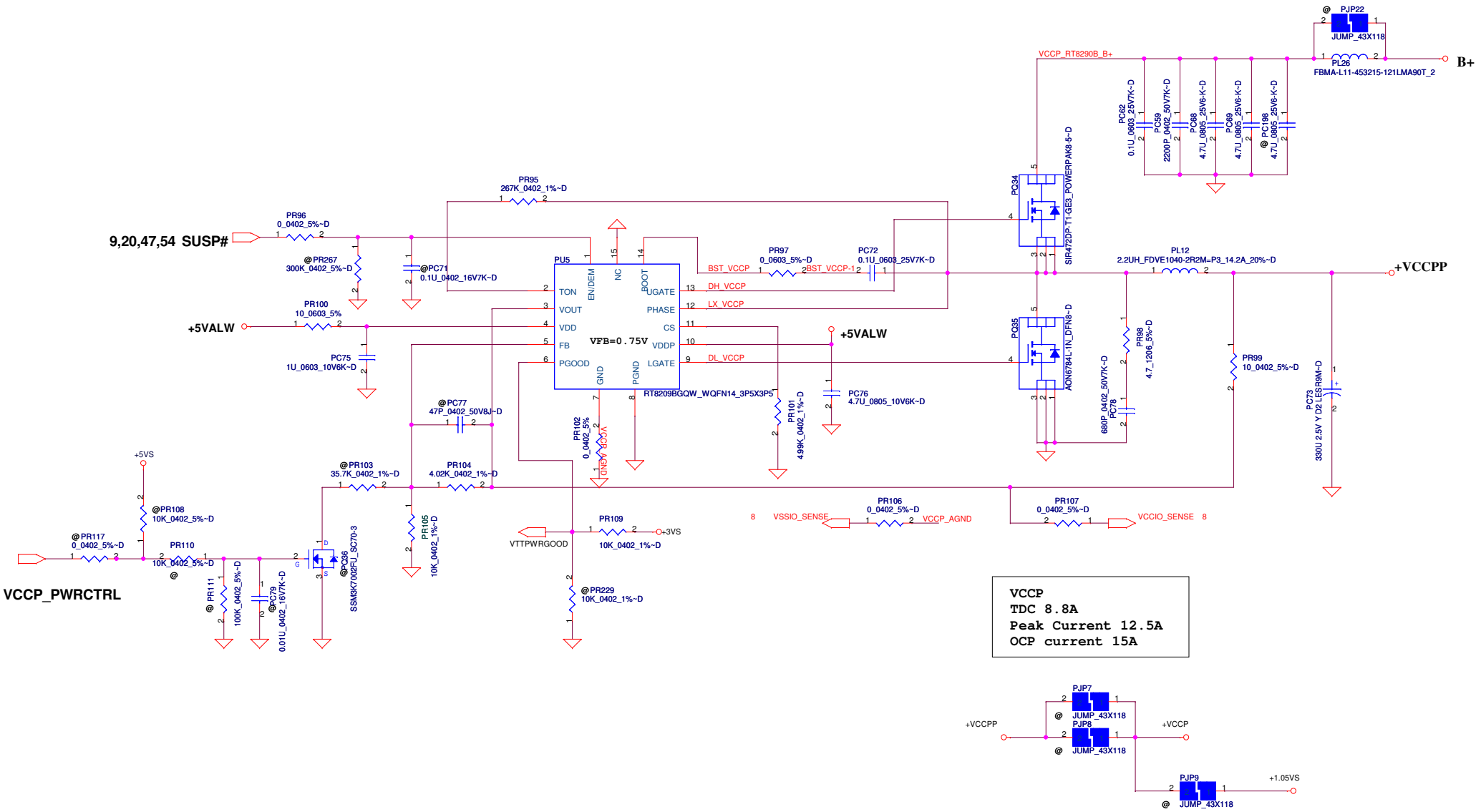

PROPRIETARY NOTE: THIS SHEET OF ENGINEERING DRAWING AND SPECIFICATIONS CONTAINS CONFIDENTIAL TRADE SECRET AND OTHER PROPRIETARY INFORMATION OF DELL INC. ("DELL") THIS DOCUMENT MAY NOT BE TRANSFERRED OR COPIED WITHOUT THE EXPRESS WRITTEN AUTHORIZATION OF DELL. IN ADDITION, NEITHER THIS SHEET NOR THE INFORMATION IT CONTAINS WAY BE USED BY OR DISCLOSED TO ANY THIRD PARTY WITHOUT DELL'S EXPRESS WRITTEN CONSENT.

Compal Electronics, Inc.

Title: +VCCPP

Size: | Document Number: LA-6601P | Rev: 0.3

Date: Tuesday, November 30, 2010 | Sheet 52 of 63

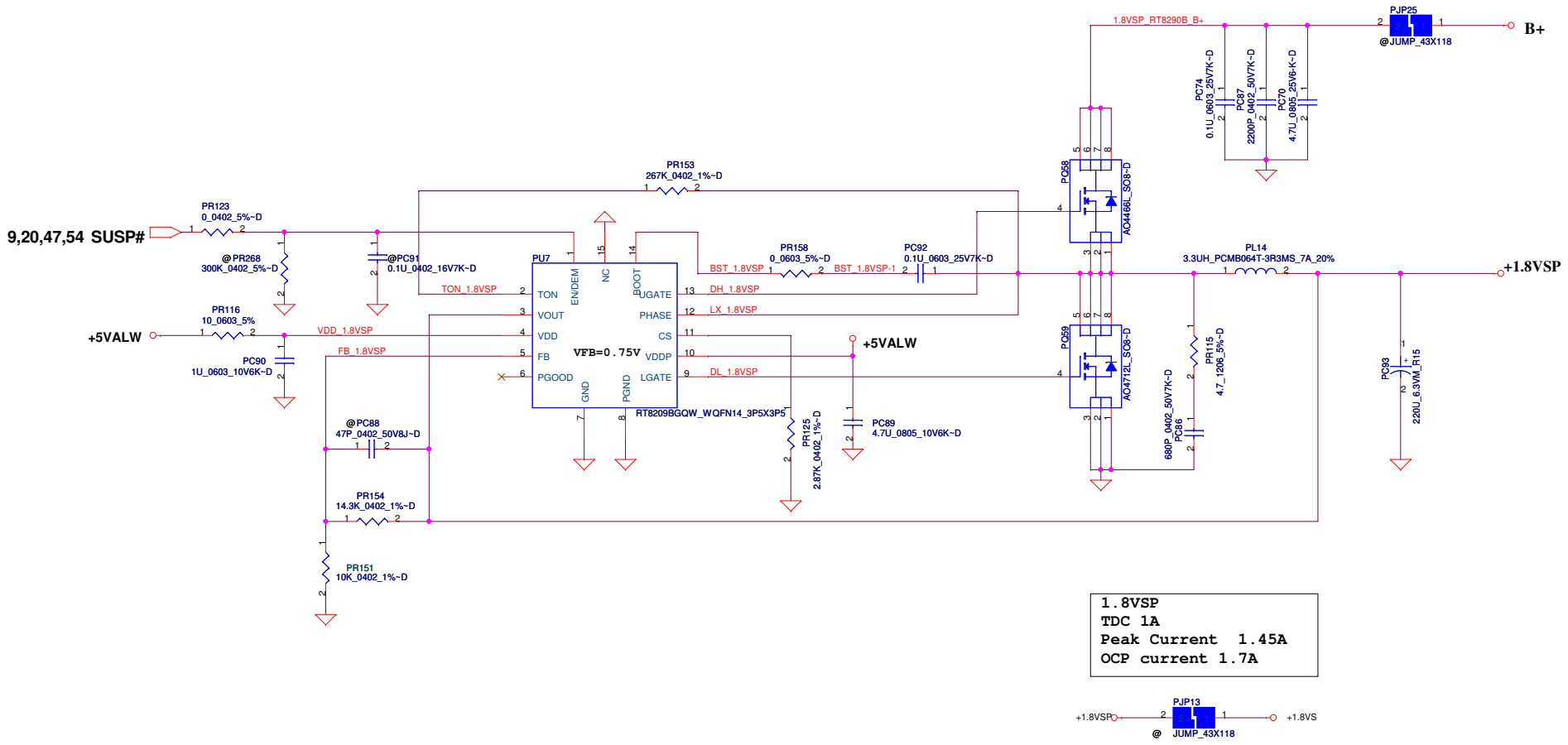

PROPRIETARY NOTE: THIS SHEET OF ENGINEERING DRAWING AND SPECIFICATIONS CONTAINS CONFIDENTIAL TRADE SECRET AND OTHER PROPRIETARY INFORMATION OF DELL INC. ("DELL") THIS DOCUMENT MAY NOT BE TRANSFERRED OR COPIED WITHOUT THE EXPRESS WRITTEN AUTHORIZATION OF DELL. IN ADDITION, NEITHER THIS SHEET NOR THE INFORMATION IT CONTAINS WAY BE USED BY OR DISCLOSED TO ANY THIRD PARTY WITHOUT DELL'S EXPRESS WRITTEN CONSENT.

Compal Electronics, Inc.	
Title	+1.8VSP
Size	Document Number: LA-6601P
Rev	0.3
Date: Tuesday, November 30, 2010	Sheet 53 of 63

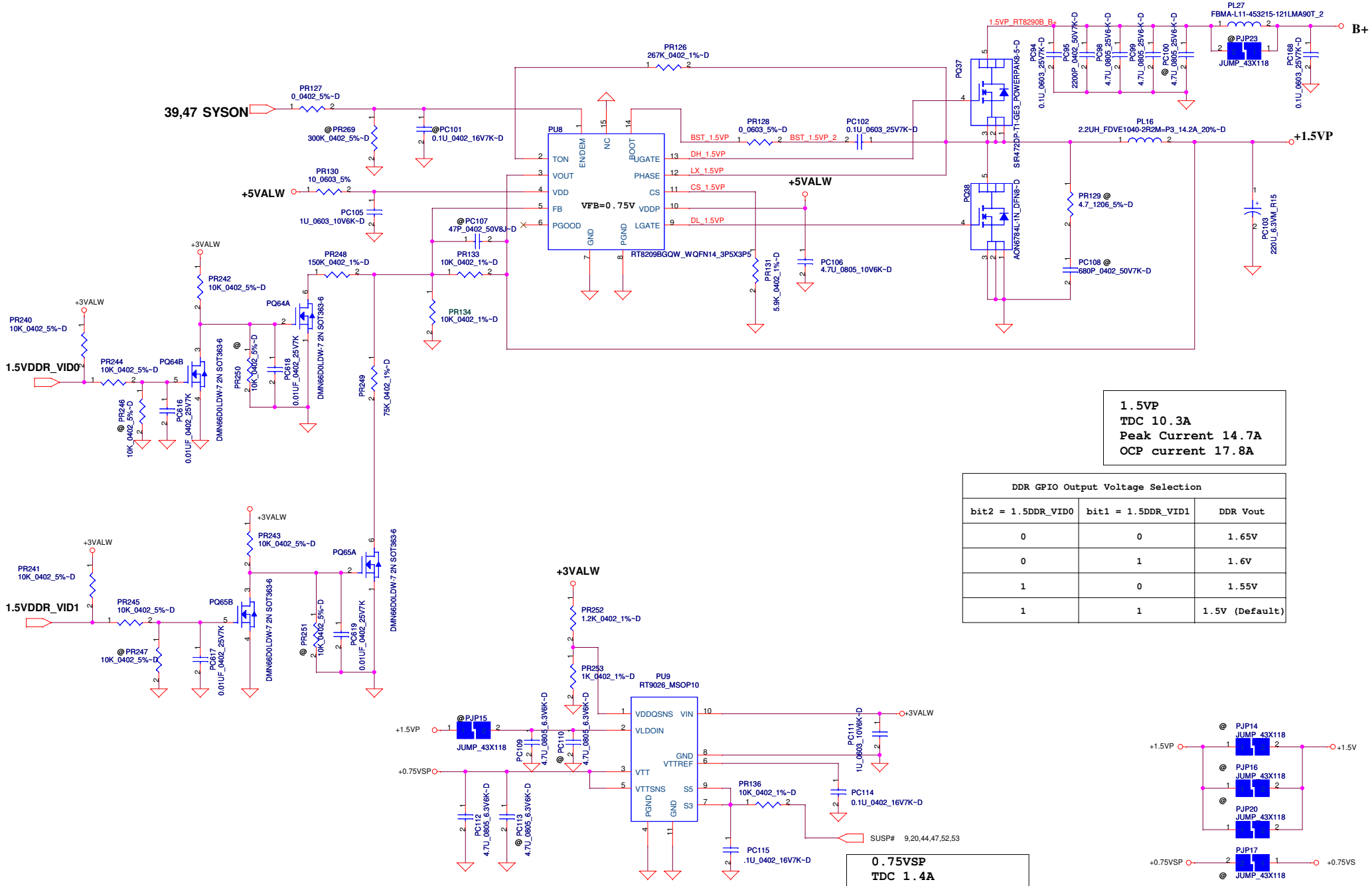

1.5VP
TDC 10.3A
Peak Current 14.7A
OCP current 17.8A

DDR GPIO Output Voltage Selection		
bit2 = 1.5DDR_VID0	bit1 = 1.5DDR_VID1	DDR Vout
0	0	1.65V
0	1	1.6V
1	0	1.55V
1	1	1.5V (Default)

0.75VSP
TDC 1.4A
Peak Current 2A
OCP current 3A

PROPRIETARY NOTE: THIS SHEET OF ENGINEERING DRAWING AND SPECIFICATIONS CONTAINS CONFIDENTIAL TRADE SECRET AND OTHER PROPRIETARY INFORMATION OF DELL INC. ("DELL") THIS DOCUMENT MAY NOT BE TRANSFERRED OR COPIED WITHOUT THE EXPRESS WRITTEN AUTHORIZATION OF DELL. IN ADDITION, NEITHER THIS SHEET NOR THE INFORMATION IT CONTAINS WAY BE USED BY OR DISCLOSED TO ANY THIRD PARTY WITHOUT DELL'S EXPRESS WRITTEN CONSENT.

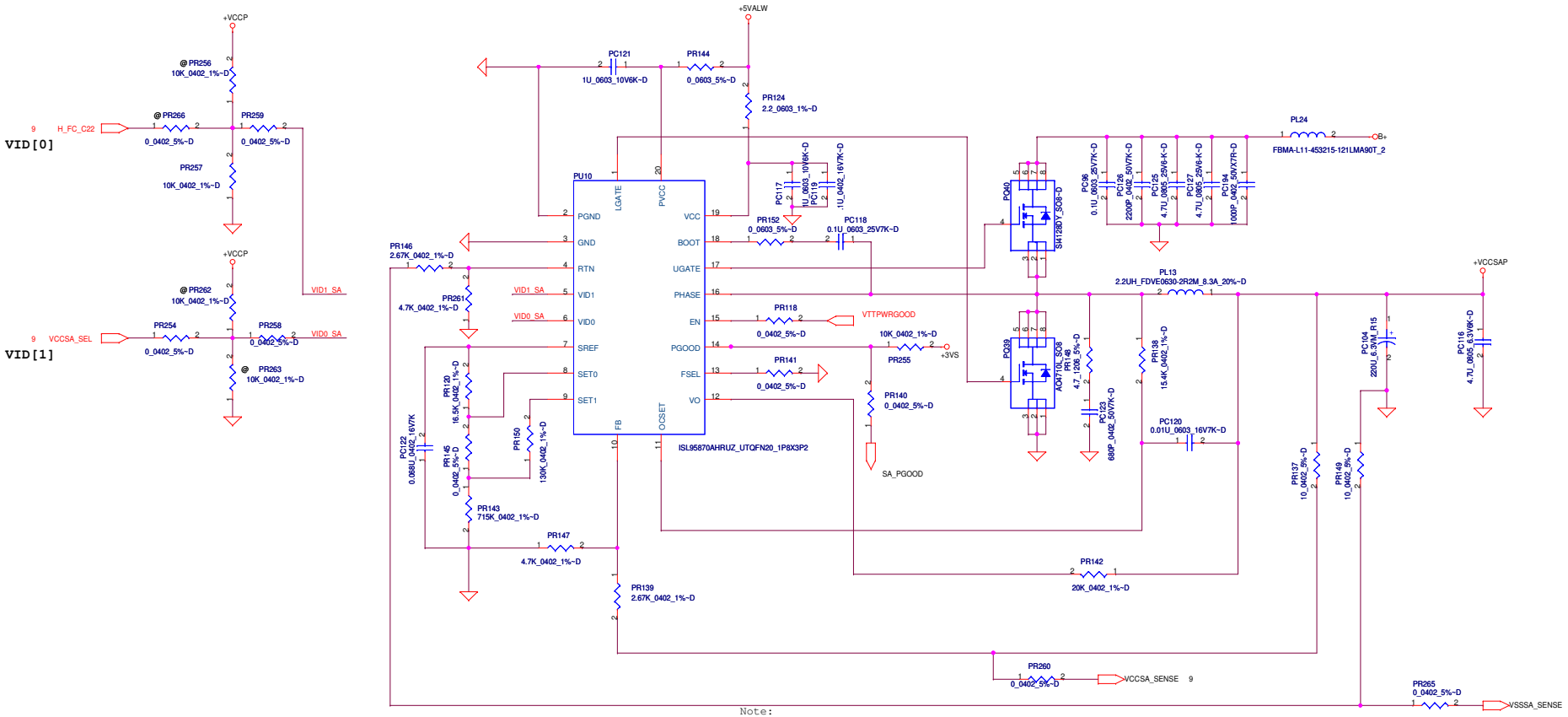

Note:
RTN pin need reference output GND

VID[0]	VID[1]	VCCSA Vout	Required	
0	0	0.9V	Yes	Yes
0	1	0.8V	Yes	Yes

+VCCSAP
TDC 4.2A
Peak Current 6A
OCP current 7.2A

PROPRIETARY NOTE: THIS SHEET OF ENGINEERING DRAWING AND SPECIFICATIONS CONTAINS CONFIDENTIAL TRADE SECRET AND OTHER PROPRIETARY INFORMATION OF DELL INC. ("DELL") THIS DOCUMENT MAY NOT BE TRANSFERRED OR COPIED WITHOUT THE EXPRESS WRITTEN AUTHORIZATION OF DELL. IN ADDITION, NEITHER THIS SHEET NOR THE INFORMATION IT CONTAINS WAY BE USED BY OR DISCLOSED TO ANY THIRD PARTY WITHOUT DELL'S EXPRESS WRITTEN CONSENT.

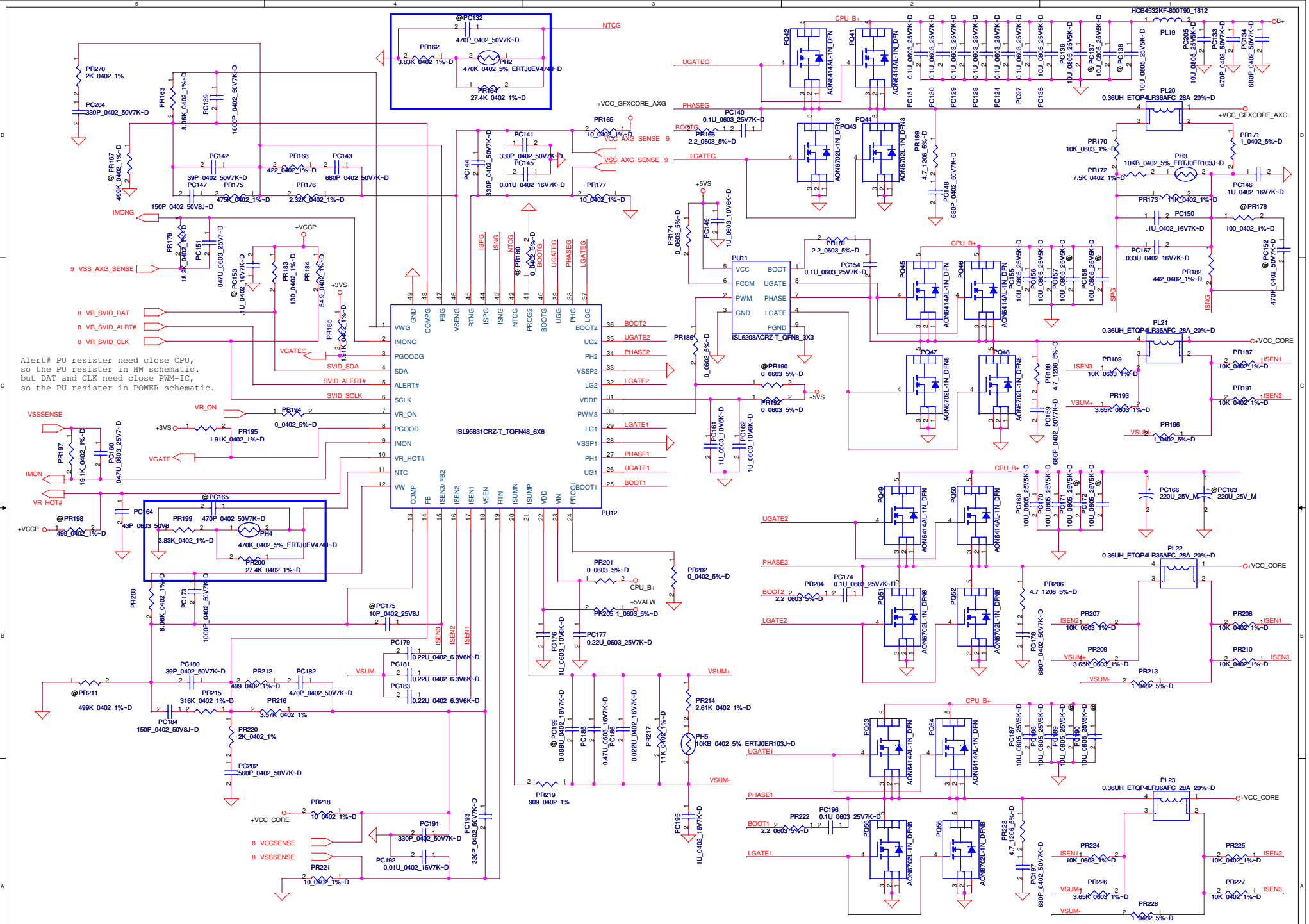

PROPRIETARY NOTE: THIS SHEET OF ENGINEERING DRAWING AND SPECIFICATIONS CONTAINS CONFIDENTIAL TRADE SECRET AND OTHER PROPRIETARY INFORMATION OF DELL INC. ("DELL") THIS DOCUMENT MAY NOT BE TRANSFERRED OR COPIED WITHOUT THE EXPRESS WRITTEN AUTHORIZATION OF DELL. IN ADDITION, NEITHER THIS SHEET NOR THE INFORMATION IT CONTAINS WAY BE USED BY OR DISCLOSED TO ANY THIRD PARTY WITHOUT DELL'S EXPRESS WRITTEN CONSENT.

Compal Electronics, Inc.

Title: **PWR-CPU_CORE**

Size | Document Number: **LA-6601P** | Rev: 0.3

Date: Tuesday, November 30, 2010 | Sheet 56 of 63

Version Change List (P. I. R. List) Page 1

Item	Page#	Title	Date	Request Owner	Issue Description	Solution Description	Rev.
1	56	CPU_CORE	10'06/17	Compal_Alvin	Improve thermal compensation.	Change PR164 from 0ohm to 27.4Kohm.	X00
2	51-57	all DC-DC schematic	10'06/17	Compal_Alvin	Improve dc to dc power efficiency.	Delete all snuber for all dc-dc. Delete PR85, PR86, PR98, PR115, PR129, PR148, PR169, PR188, PR206, PR223. Delete PC60, PC61, PC78, PC86, PC108, PC123, PC148, PC159, PC178, PC197.	X00
3	50	Charger	10'07/22	Compal_Alvin	Voltage rating enhancement.	Change PR49 form 14.3K to 15K.	X01
4	50	Charger	10'07/22	Compal_Alvin	Output capacitor rating enhancement.	Add PC46 10uF 0805 to output.	X01
5	51	+5VALWP/+3VALWP	10'07/22	Compal_Alvin	Enhance Input capacitor rating and switch waveform.	Add PC80 4.7uF 0805 to input and change low side to FDMS0310S.	X01
6	56	CPU_CORE	10'07/22	Compal_Alvin	Improve EMC solution.	Add PC97, PC124, PC128, PC129, PC130, PC131 0.1uF 0603.	X01
7	51	+5VALWP/+3VALWP	10'07/22	Compal_Alvin	Improve EMC solution.	Add PC80 0.1uF 0603.	X01
8	54	+1.5VP/0.75VSP	10'07/22	Compal_Alvin	Improve EMC solution.	Add PC168 0.1uF 0603.	X01
9	55	VCCSAP	10'07/22	Compal_Alvin	Improve EMC solution.	Add PL24 120ohm bead, and PC194 1000pF 0402.	X01
10	53	+1.8VSP	10'07/22	Compal_Alvin	Improve low side switching waveform.	Change PQ59 from AO4466 to AO4712L	X01
11	49	DCIN/DECTOR	10'08/03	Compal_Alvin	Add dynmatic trubo function to control trubo.	Add dynamatic trubo function.	X01
12	52	+VCCPP	10'08/10	Compal_Alvin	For met Intel SPEC.	Change VCCPP output CAP to 470uF.	X01
13	56	CPU_CORE	10'08/10	Compal_Alvin	Adjust the CPU loadline and transient to met Intel SPEC.	PC167 and PC186. PR216, PR219, PR202, PR180, PR176, PR179, PR182, PR167, PR186.	X01
14	56	CPU_CORE	10'09/28	Compal_Alvin	Improve CPUCore PWRGOOD signal.	Change VDD power rail from 5VS to 5VALW and add PR220 and PC202.	X02
15	55	VCCSAP	10'09/28	Compal_Alvin	Improve VCCSA PWRGOOD signal.	Change VCC power rail from 5VS to 5VALW.	X02
16	49/50	DCIN/DECTOR BATTERY CONN/OTP	10'09/28	Compal_Alvin	Saving S4/S5 power consumption.	Change PU1 Pin8 from Pre_V to VL.	X02
17	51/52/54	+5VALWP/+3VALWP +VCCPP +1.5VP/0.75VSP	10'10/12	Compal_Alvin	For EMI solution.	Add PL25, PL26, PL27 P/N:SM01000DJ00 (S SUPPRE_ FBMA-L11-453215-121LMA90T 1812) Add 10uF PC205 and change PC23, PC24 to 10uF. Pop PC133 and PC134.	X02

PROPRIETARY NOTE: THIS SHEET OF ENGINEERING DRAWING AND SPECIFICATIONS CONTAINS CONFIDENTIAL TRADE SECRET AND OTHER PROPRIETARY INFORMATION OF DELL INC. ("DELL") THIS DOCUMENT MAY NOT BE TRANSFERRED OR COPIED WITHOUT THE EXPRESS WRITTEN AUTHORIZATION OF DELL. IN ADDITION, NEITHER THIS SHEET NOR THE INFORMATION IT CONTAINS WAY BE USED BY OR DISCLOSED TO ANY THIRD PARTY WITHOUT DELL'S EXPRESS WRITTEN CONSENT.

Version Change List (P. I. R. List) Page 1

Item	Page #	Title	Date	Request Owner	Issue Description	Solution Description	Rev.
18	51-56	all DC-DC schematic	10'10/13	Compal_Alvin	EMI solution.	Add all snuber for all dc-dc. Add PR85, PR86, PR98, PR115, PR129, PR148, PR169, PR188, PR206, PR223. Add PC60, PC61, PC78, PC86, PC108, PC123, PC148, PC159, PC178, PC197.	X02
19	50	Charger	10'11/02	Compal_Alvin	Precharger schematic bom change for old solution	Delete PD13, PD15, PR51, PQ22, PC32. Add PQ60, PR231.	X02

PROPRIETARY NOTE: THIS SHEET OF ENGINEERING DRAWING AND SPECIFICATIONS CONTAINS CONFIDENTIAL TRADE SECRET AND OTHER PROPRIETARY INFORMATION OF DELL INC. ("DELL") THIS DOCUMENT MAY NOT BE TRANSFERRED OR COPIED WITHOUT THE EXPRESS WRITTEN AUTHORIZATION OF DELL. IN ADDITION, NEITHER THIS SHEET NOR THE INFORMATION IT CONTAINS WAY BE USED BY OR DISCLOSED TO ANY THIRD PARTY WITHOUT DELL'S EXPRESS WRITTEN CONSENT.

Version Change List (P. I. R. List) Page 1

Item	Page#	Title	Date	Request Owner	Issue Description	Solution Description	Rev.
1	29	DP SW for mDP CONN	10'07/22	Compal_Yungmao	Mini DP no function	Modified JMDP1 pin define	X00
2	39	USB 3.0 PD720200	10'08/10	Compal_Yungmao	USB3.0 transfer speed is too low	L33 swap pin3 with pin4, net U3TXDN2_L, U3TXDN2 L34 swap pin3 with pin4, net U3TXDP1_L, U3TXDP1 L35 swap pin3 with pin4, net U3RXDN2_L, U3RXDN2 L36 swap pin3 with pin4, net U3RXDP1_L, U3RXDP1	X00
3	31	HDMI input - STDP6038	10'07/22	Compal_Yungmao	HDMI-IN no function	Change U7 pin111, 112 to U7 pin72,pin71	X00
4	34-35	HD Audio_IDT92HD73C	10'08/3	Compal_Yungmao	S/PDIF jack no function	net LINE_OUT_JD connect to R1677 pin2 delete R721, R722, C740	X00
5	38	Mini Card -WLAN / DMC / BT	10'08/11	Compal_Yungmao	Install Bluetooth module might be cause system can't bootable	remove net name BT_ACTIVE	X00
6	33	GLAN AR8151 AL1A	10'08/9	Compal_Yungmao	LOM can't work in 1000Mbps speed and no LED is on	swap JLAN1 pin11 with pin13, net LAN_LINK#, LAN_LED2#	X00
7	34	HD Audio_IDT92HD73C	10'08/10	Compal_Yungmao	Audio left and right channel reverse	swap U9, U16 pin6 with pin8	X00
8	40	USB/ESATA TS3USB221RSER	10'08/3	Compal_Yungmao	USB charging Device can't be charging in S4/S5 with" AC and Battery " mode	change D18 from +5VS to +5VALW	X00
9	14	MXMIII Connector A	10'07/22	Compal_Yungmao	-9% of 3.3V (3.003) will cause no display when system power on	add R1817, R1816, Q281	X00
10	5	PROCESSOR(2/6) PM,XDP,CLK	10'07/15	Compal_Yungmao	for EMI/EDS requirement	add RC121,RC125,RC126,RC127,RC128	X00
11	10~13	DDRIII DIMMA ~ DDRIII DIMMD	10'07/15	Compal_Yungmao	for DDR3 module can select serial address	add RD35,RD36,RD37,RD38,RD39,RD47,RD49	X00
12	14	MXMIII Connector A	10'08/4	Compal_Yungmao	for MXM3.0 module power saving	add R1818, R1819 pull high	X00
13	25	LVDS SW- 1 to 2 & GPU/PCH	10'07/13	Compal_Yungmao	STDP6038 chipset vendor require to add for debug used	add R313, R314	X00
14	04	PROCESSOR(6/6)	10'09/20	Compal_Ray	derating fail	QC4 change to SB00000090L	X02
15	14	MXMIII Connector	10'09/20	Compal_Ray	battery can't charge	R1818, R1819 depop, change connection EC_SMB_DA1 to VGA_SMB_DA1	X02
16	17	PCH (3/8)	10'09/20	Compal_Ray	can't boot when plug bluetooth module.	pop RH95	X02
17	26	LVDS SW & CONN	10'09/20	Compal_Ray	Web CAM can't work.	Change CAM power to 3VS	X02

PROPRIETARY NOTE: THIS SHEET OF ENGINEERING DRAWING AND SPECIFICATIONS CONTAINS CONFIDENTIAL TRADE SECRET AND OTHER PROPRIETARY INFORMATION OF DELL INC. ("DELL") THIS DOCUMENT MAY NOT BE TRANSFERRED OR COPIED WITHOUT THE EXPRESS WRITTEN AUTHORIZATION OF DELL. IN ADDITION, NEITHER THIS SHEET NOR THE INFORMATION IT CONTAINS WAY BE USED BY OR DISCLOSED TO ANY THIRD PARTY WITHOUT DELL'S EXPRESS WRITTEN CONSENT.

Version Change List (P. I. R. List) Page 2

Item	Page#	Title	Date	Request Owner	Issue Description	Solution Description	Rev.
17	28	HDMI SW	10'09/20	Compal_Ray	Follow A18 +HDMI_5V_OUT circuit	remove QV5,CV40,RV35,QV6,RV34,Add R1896	X02
18	28	HDMI SW	10'09/20	Compal_Ray	HDMI can't work	Change UV2 HPD connection	X02
19	30	HDMI SW for DMC	10'09/20	Compal_Ray	DP can't work	pop R1865 add R1958,R1959, remove C52,C53	X02
20	40	USB/ESATA	10'09/20	Compal_Ray	eSATA can't work	remove RS12	X02
21	40	USB/ESATA	10'09/20	Compal_Ray	update for eSATA power share function	PWRSHARE_EN# GPIO assign to EC pin 86 Add R97 for PWRSHARE_EN# pull down add R1699,D31	X02
22	15	PCH (1/8)	10'09/20	Compal_Ray	ME position redifned for HDD.	Swap HDD1(Port 1) ,HDD2(Port 0)	X02
23	39	USB3.0 PD720200	10'09/27	Compal_Ray	USB3.0 can't work	depop R201, pop R202 0 ohm	X02
24	17	PCH (3/8)	10'09/27	Compal_Ray	AV17 doesn't support deep sleep mode	pop RH126, add RH159 and depop it depop RH139 ,RH134	X02
~~25~~	~~15~~	~~PCH (1/8)~~	~~10'09/27~~	~~Compal_Ray~~	~~Add HDA BUS ON/OFF control circuit,~~	~~add CH17,UH9,RH30,RH50,QH10,RH267~~	~~X02~~
26	15	PCH (1/8)	10'09/27	Compal_Ray	follow Design guide	Add RH47 for BBS_BIT0_R	X02
27	17	PCH (3/8)	10'09/27	Compal_Ray	follow Design guide	Add R1687 for PCH_RSMRST# pull down	X02
28	17	PCH (3/8)	10'09/27	Compal_Ray	Change ACIN connection	Remove RH150 ,RH137,Add R1900,R1899,QH11	X02
29	35	Speaker AMP	10'09/27	Compal_Ray	To solve po noise when HDMI IN toggling	add Q10	X02
30	04	PROCESSOR(6/6)	10'09/27	Compal_Ray	derating fail	QC4 change to SB00000090L	X02
31	34	HD Audio	10'09/27	Compal_Ray	Add HDMI IN audio sense circuit.	add Q284 R1902,R1903	X02
32	34	HD Audio	10'09/27	Compal_Ray	to solve backdrive issue on +3VS	add D54	X02
33	15	PCH (1/8)	10'09/27	Compal_Ray	follow DG1.5 recommand	Add R1960	X02

PROPRIETARY NOTE: THIS SHEET OF ENGINEERING DRAWING AND SPECIFICATIONS CONTAINS CONFIDENTIAL TRADE SECRET AND OTHER PROPRIETARY INFORMATION OF DELL INC. ("DELL") THIS DOCUMENT MAY NOT BE TRANSFERRED OR COPIED WITHOUT THE EXPRESS WRITTEN AUTHORIZATION OF DELL. IN ADDITION, NEITHER THIS SHEET NOR THE INFORMATION IT CONTAINS WAY BE USED BY OR DISCLOSED TO ANY THIRD PARTY WITHOUT DELL'S EXPRESS WRITTEN CONSENT.

Version Change List (P. I. R. List) Page 2

Item	Page#	Title	Date	Request Owner	Issue Description	Solution Description	Rev.
34	16	PCH (4/8)	10'09/27	Compal_Ray	PLTREST_VGA issue	Add R28 D13 and change RH170 to 0 ohm	X02
35	28	HDMI SW	10'10/01	Compal_Ray	Addd R58 for HMI_SW_DETECT bypass direct due to it's desn't need level shift to 5V	Add R58	X02
36	35	Speaker AMP	10'10/01	Compal_Ray	add mute siwtch to solve po noise issue	Add U619 ,C1843	X02
37	33	GLAN AR8151 AL1A	10'10/01	Compal_Ray	Change CL39 to 3KV spec for Hi-port test	change CL39 to 1000P_1808_3KV7K~D	X02
38	15	PCH	10'10/07	Compal_Ray	Rename location	Change CLIP1 to COMS1 and CLIP2 to ME1	X02
39	39	USB 3.0	10'10/07	Compal_Ray	Add power option	Add R1964,R1965,R1966,R1967 for U37 power option	X02
40	31	HDMI	10'10/07	Compal_Ray	For double pull high	Remove R81,R83	X02
41	15	PCH	10'10/07	Compal_Ray	Change RTC circuit	Change RTC circuit and change DH1 to CHN202UPT,Reomve RH250	X02
42	33	GLAN AR8151 AL1A	10'10/07	Compal_Ray	Crystal EA result	Change CL18,CL19 to 15pF by crystal EA result	X02
43	9,10,11	CPU	10'10/07	Compal_Ray	Remove XDP 0 ohm resistor	CPU XDP depop, Remove:RC68~RC71, Change to depop RC59,RC61~RC67,RC121,RC121,RC125~RC128,RC50,RC51 Add T51~T54	X02
44	16	PCH	10'10/07	Compal_Ray	Crystal EA result	Change YH2 to X5H025000DC1H-H, CH23,CH24 to 12pF by crystal EA result	X02
45	5	CPU	10'10/07	Compal_Ray	Follow Design guide 1.5	Add RC113 to reserve PCH_PWROK for VDDPWRGOOD	X02
46	31	ST6038	10'10/07	Compal_Ray	Derating issue	Change L13 to BLM18AG601SN1D for derating issue	X02
47	9	CPU	10'10/07	Compal_Ray	S3 issue	Reserve CC178 for CPU1.5V_S3_GATE timing delay	X02
48	31	ST6038	10'10/07	Compal_Ray	By vendor review	Follow vendor to depop R1744	X02
49	32	ST4028	10'10/07	Compal_Ray	By vendor review	Change U607 to M25PE20	X02
50	31	ST6038	10'10/08	Compal_Ray	Timing issue	Add R172 for LDO timing enable timing delay	X02

PROPRIETARY NOTE: THIS SHEET OF ENGINEERING DRAWING AND SPECIFICATIONS CONTAINS CONFIDENTIAL TRADE SECRET AND OTHER PROPRIETARY INFORMATION OF DELL INC. ("DELL") THIS DOCUMENT MAY NOT BE TRANSFERRED OR COPIED WITHOUT THE EXPRESS WRITTEN AUTHORIZATION OF DELL. IN ADDITION, NEITHER THIS SHEET NOR THE INFORMATION IT CONTAINS WAY BE USED BY OR DISCLOSED TO ANY THIRD PARTY WITHOUT DELL'S EXPRESS WRITTEN CONSENT.

Version Change List (P. I. R. List) Page 2

Item	Page#	Title	Date	Request Owner	Issue Description	Solution Description	Rev.
51	16	Codec	2010/10/8	Compal_Ray	Mute issue	Add U620,C1844,U621,C1845 for mute	X02
52	28	MXM	2010/10/8	Compal_Ray	Follow A18	Change AC_BATT# to EC_AC_BAT# , and remove R1817,D72, add U622,C1823	X02
53	35	USB3.0	2010/10/8	Compal_Ray	EMI issue	Change L33~L38 to DLW21SN670HQ2L	X02
54	26	LVDS SW	2010/10/8	Compal_Ray	Remove resistor for double pull high	Remove R323 ,R326	X02
55	35	Audio	2010/10/12	Compal_Ray	By Maxim review result	Change C154,C158 to .022uF and R140,R145 to 20K	X02
56	15	PCH	2010/10/12	Compal_Ray	Reserve o ohm for HDA_SDOUT	Add RH51	X02
57	44	ENE	2010/10/12	Compal_Ray	Change GPIO	Change GPIO46 to VGA_ON and depop RH118	X02
58	24,44	ENE	2010/10/12	Compal_Ray	Change GPIO, and add backlight control circuit	Change VGA_ON to LCD_BKL_EN, and add backlight control circuit, add Q39,C332,R422,R423,Q28,C331	X02
59	29	DP	2010/10/12	Compal_Ray	DP dual mode can't display	Remove C301,C308	X02
60	35	Audio	2010/10/12	Compal_Ray	To reach 16dB	Change R137,R142 to 16.2K	X02
61	15	PCH	2010/10/22	Compal_Ray	Pop RH50 for ME lock issue	Pop RH50	A00
62	37	ODD	2010/10/22	Compal_Ray	Re define ODD pin	For ODD power require, add one more power pin	A00
63	37	ODD	2010/10/22	Compal_Ray	Remove zero power ODD switch.	Remove SW1 and add R173 0 ohm for ODD_DA#	A00
64	46	power switch	2010/10/22	Compal_Ray	Remove reserve power switch	Remove SW4,SW5	A00
65	24,44	LCD	2010/10/22	Compal_Ray	Correct net name	Rename LCD_BKL_EN# to LCD_BKL_EN	A00
66	44	BID	2010/10/22	Compal_Ray	Change BID	Change BID, R225 to 56K	A00
67	34	BID	2010/10/22	Compal_Ray	HDMI in audio issue.	change HDMI_IN_SELECT# to HDMI_TOGGLE	A00

PROPRIETARY NOTE: THIS SHEET OF ENGINEERING DRAWING AND SPECIFICATIONS CONTAINS CONFIDENTIAL TRADE SECRET AND OTHER PROPRIETARY INFORMATION OF DELL INC. ("DELL") THIS DOCUMENT MAY NOT BE TRANSFERRED OR COPIED WITHOUT THE EXPRESS WRITTEN AUTHORIZATION OF DELL. IN ADDITION, NEITHER THIS SHEET NOR THE INFORMATION IT CONTAINS WAY BE USED BY OR DISCLOSED TO ANY THIRD PARTY WITHOUT DELL'S EXPRESS WRITTEN CONSENT.

Version Change List (P. I. R. List) Page 2

Item	Page#	Title	Date	Request Owner	Issue Description	Solution Description	Rev.
68	26	AMD	2010/10/22	Compal_Ray	AMD MXM card Brightness Contrl Hot/Key issue	add RV46 and connect to SG_AMD_BKL.	A00
69	17,28, 29,30	NV	2010/10/22	Compal_Ray	Meet NV Optimus V1.2	Change AC_BATT# to EC_AC_BAT# , and remove R1817,D72, add U622,C1823	A00
70	27	CRT	2010/10/22	Compal_Ray	CRT switch high EOS failure rate	Change C13~C15 to 0.01uF.	A00
71	31	HDMI	2010/10/22	Compal_Ray	HDMI in cable detect issue	Add R1968,Q285,R1845	A00
72	44	ENE	2010/10/22	Compal_Ray	Crystal remove for ENE	Add C1846 for not use crystal for ENE	A00
73	24	EDP	2010/10/29	Compal_Ray	Remove RV39	Remove RV39 for LCDVDD_ON double pull down	A00
74	36	HDD	2010/10/30	Compal_Ray	Left HDD pin to NC	Left JHDD2 Pin 20,21,22 to NC	A00

PROPRIETARY NOTE: THIS SHEET OF ENGINEERING DRAWING AND SPECIFICATIONS CONTAINS CONFIDENTIAL TRADE SECRET AND OTHER PROPRIETARY INFORMATION OF DELL INC. ("DELL") THIS DOCUMENT MAY NOT BE TRANSFERRED OR COPIED WITHOUT THE EXPRESS WRITTEN AUTHORIZATION OF DELL. IN ADDITION, NEITHER THIS SHEET NOR THE INFORMATION IT CONTAINS WAY BE USED BY OR DISCLOSED TO ANY THIRD PARTY WITHOUT DELL'S EXPRESS WRITTEN CONSENT.