http://hobi-elektronika.net

COMPAL CONFIDENTIAL

MODEL NAME : *PAL70*

PCB NO : *LA-6611P (DAA00001W10)*

BOM P/N : *43XXXXXXLXX*

GPIO MAP Version 1010

E3 MACALLAN 13" UMA
BGA Sandy Bridge +
FCBGA PCH Cougar Point-M
2010-01-21
REV : 1.0(A00)

Items	R1 P/N	R3 P/N
CPU 2.5G	SA00004EL2L	SA00004EL3L
CPU 2.6G	SA00004EM2L	SA00004EM3L
CPU 2.7G	SA00004F02L	SA00004F03L
CPU 2.1G	SA00004KP1L	SA00004KP2L
PCH	SA00004IW2L	SA00004IW3L
LAN	SA00003SI4L	SA00003SI5L
USH	SA00003AO1L	SA00003AO2L

@ : Nopop Component

MB Type	BOM P/N	TPM		TCM		With SPI	With TAA
		1@	3@	2@	4@	5@	6@
2.5G CPU TPM EN/ TCM DIS/W TAA	43193431L06	*	*				*
2.5G CPU TPM EN/ TCM DIS/W/SPI	43193431L03	*	*			*	
2.5G CPU TPM DIS/ TCM EN				*	*		*
2.5G CPU TPM DIS/ TCM EN/W/SPI				*	*	*	
2.5G CPU TPM DIS/ TCM DIS			*	*			*
2.5G CPU TPM DIS/ TCM DSI /W/ SPI	43193431L15		*	*		*	
2.6G CPU TPM EN/ TCM DIS/W TAA	43193431L07	*	*				*
2.6G CPU TPM EN/ TCM DIS/W/SPI	43193431L04	*	*			*	
2.6G CPU TPM DIS/ TCM EN				*	*		*
2.6G CPU TPM DIS/ TCM EN/W/SPI				*	*	*	
2.6G CPU TPM DIS/ TCM DIS			*	*			*
2.6G CPU TPM DIS/ TCM DSI /W/ SPI	43193431L16		*	*		*	
2.7G CPU TPM EN/ TCM DIS/W TAA	43193431L08	*	*				*
2.7G CPU TPM EN/ TCM DIS/W/SPI	43193431L05	*	*			*	
2.7G CPU TPM DIS/ TCM EN				*	*		*
2.7G CPU TPM DIS/ TCM EN/W/SPI				*	*	*	
2.7G CPU TPM DIS/ TCM DIS			*	*			*
2.7G CPU TPM DIS/ TCM DSI /W/ SPI	43193431L17		*	*		*	

MB PCB

Part Number	Description
DAA00001W00	PCB PAL70 LA6611

PROPRIETARY NOTE: THIS SHEET OF ENGINEERING DRAWING AND SPECIFICATIONS CONTAINS CONFIDENTIAL TRADE SECRET AND OTHER PROPRIETARY INFORMATION OF DELL INC. ("DELL") THIS DOCUMENT MAY NOT BE TRANSFERRED OR COPIED WITHOUT THE EXPRESS WRITTEN AUTHORIZATION OF DELL. IN ADDITION, NEITHER THIS SHEET NOR THE INFORMATION IT CONTAINS WAY BE USED BY OR DISCLOSED TO ANY THIRD PARTY WITHOUT DELL'S EXPRESS WRITTEN CONSENT.

DELL CONFIDENTIAL/PROPRIETARY

Compal Electronics, Inc.

Title: Cover Sheet

Size | Document Number: LA-6611P | Rev 1.0

Date: Wednesday, January 26, 2011 | Sheet 1 of 64

http://hobi-elektronika.net

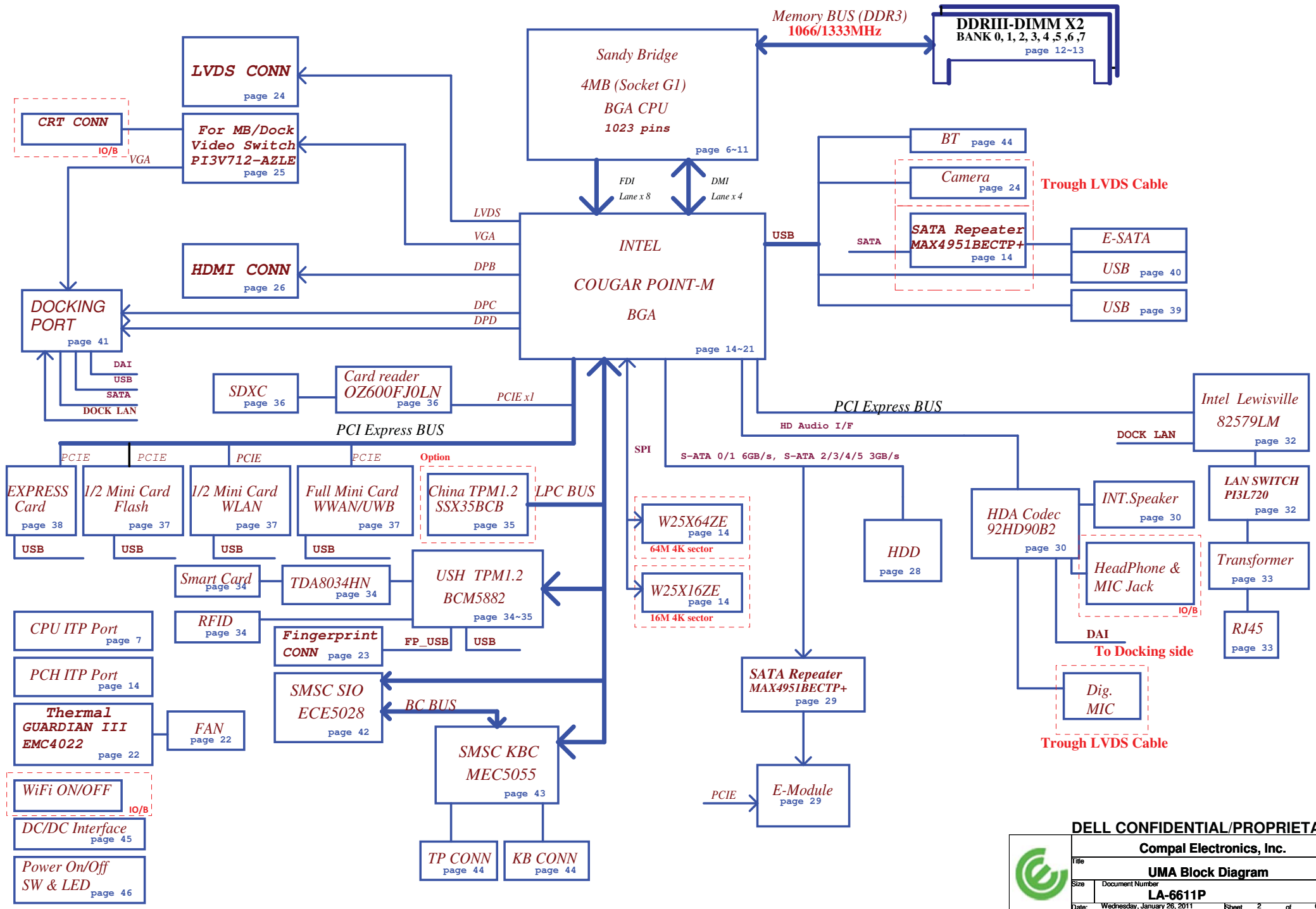

DELL CONFIDENTIAL/PROPRIETARY

Compal Electronics, Inc.

Title	UMA Block Diagram	
Size	Document Number LA-6611P	Rev 0.3
Date: Wednesday, January 26, 2011	Sheet 2 of 64	

http://hobi-elektronika.net

POWER STATES

State \ Signal	SLP S3#	SLP S4#	SLP S5#	S4 STATE#	SLP M#	ALWAYS PLANE	M PLANE	SUS PLANE	RUN PLANE	CLOCKS
S0 (Full ON) / M0	HIGH	HIGH	HIGH	HIGH	HIGH	ON	ON	ON	ON	ON
S3 (Suspend to RAM) / M1	LOW	HIGH	HIGH	HIGH	HIGH	ON	ON	ON	OFF	OFF
S4 (Suspend to DISK) / M1	LOW	LOW	HIGH	LOW	HIGH	ON	ON	OFF	OFF	OFF
S5 (SOFT OFF) / M1	LOW	LOW	LOW	LOW	HIGH	ON	ON	OFF	OFF	OFF
S3 (Suspend to RAM) / M-OFF	LOW	HIGH	HIGH	HIGH	LOW	ON	OFF	ON	OFF	OFF
S4 (Suspend to DISK) / M-OFF	LOW	LOW	HIGH	LOW	LOW	ON	OFF	OFF	OFF	OFF
S5 (SOFT OFF) / M-OFF	LOW	LOW	LOW	LOW	LOW	ON	OFF	OFF	OFF	OFF

PM TABLE

State \ power plane	+15V_ALW +5V_ALW +3.3V_ALW_PCH +3.3V_RTC_LDO	+3.3V_SUS +1.5V_MEM	+5V_RUN +3.3V_RUN +1.8V_RUN +1.5V_RUN +0.75V_DDR_VTT +VCC_CORE +1.05V_RUN_VTT +1.05V_RUN	+3.3V_M +1.05V_M	+3.3V_M +1.05V_M (M-OFF)
S0	ON	ON	ON	ON	ON
S3	ON	ON	OFF	ON	OFF
S5 S4/AC	ON	OFF	OFF	ON	OFF
S5 S4/AC don't exist	OFF	OFF	OFF	OFF	OFF

SATA	DESTINATION
SATA 0	HDD
SATA 1	ODD/ E3 Module Bay
SATA 2	NA
SATA 3	NA
SATA 4	ESATA
SATA 5	Dock

Stack up

Layer	Thickness (Material SPEC.) Unit : mil	Thickness (Actuality) Unit : mil
SolderMask	min 0.4	0.50
Add Plating	1.30	1.05
Top/L1(signal)	0.5oz(0.68)	0.65
Prepreg	1080LRC	2.65
	0.5oz	0.65
Core	3mil	3.09
L3(IN1)	0.5oz	0.65
Prepreg	1080LRC+1080	5.1
L4(IN2)	1oz	1.35
Core	3mil	3.09
L5(GND2)	1oz	1.35
Prepreg	1080HRC	2.90
L6(IN3)	0.5oz	0.65
Core	6mil	6
L7(IN4)	0.5oz	0.65
Prepreg	1080HRC	2.90
L8(VCC)	1oz	1.35
Core	3mil	3.09
L9(IN5)	1oz	1.35
Prepreg	1080LRC+1080	5.1
L10(IN6)	0.5oz	0.65
Core	3mil	3.09
L11(GND3)	0.5oz	0.65
Prepreg	1080LRC	2.65
Bottom/L12(signal)	0.5oz(0.68)	0.65
Add Plating	1.30	1.05
SolderMask	min 0.4	0.50
Overall Thickness	1.36mm+/-10%	53.36

	USB PORT#	DESTINATION
PCH	0	JUSB1 (Ext Right Side)
	1	none
	2	Right Side (ESATA)
	3	none
	4	WLAN/WIMAX
	5	WWAN/UWB
	6	Flash
	7	USH->BIO
	8	DOCKING
	9	DOCKING
	10	Express card
	11	Bluetooth
	12	Camera
	13	none

USH	0	BIO
	1	NA

PCI EXPRESS	DESTINATION
Lane 1	MINI CARD-1 WWAN
Lane 2	MINI CARD-2 WLAN
Lane 3	Express card
Lane 4	E3 Module Bay (USB3)
Lane 5	1/2vMINI CARD-3 PCIE
Lane 6	MMI
Lane 7	10/100/1G LOM
Lane 8	None

PROPRIETARY NOTE: THIS SHEET OF ENGINEERING DRAWING AND SPECIFICATIONS CONTAINS CONFIDENTIAL TRADE SECRET AND OTHER PROPRIETARY INFORMATION OF DELL INC. ("DELL") THIS DOCUMENT MAY NOT BE TRANSFERRED OR COPIED WITHOUT THE EXPRESS WRITTEN AUTHORIZATION OF DELL. IN ADDITION, NEITHER THIS SHEET NOR THE INFORMATION IT CONTAINS WAY BE USED BY OR DISCLOSED TO ANY THIRD PARTY WITHOUT DELL'S EXPRESS WRITTEN CONSENT.

http://hobi-elektronika.net

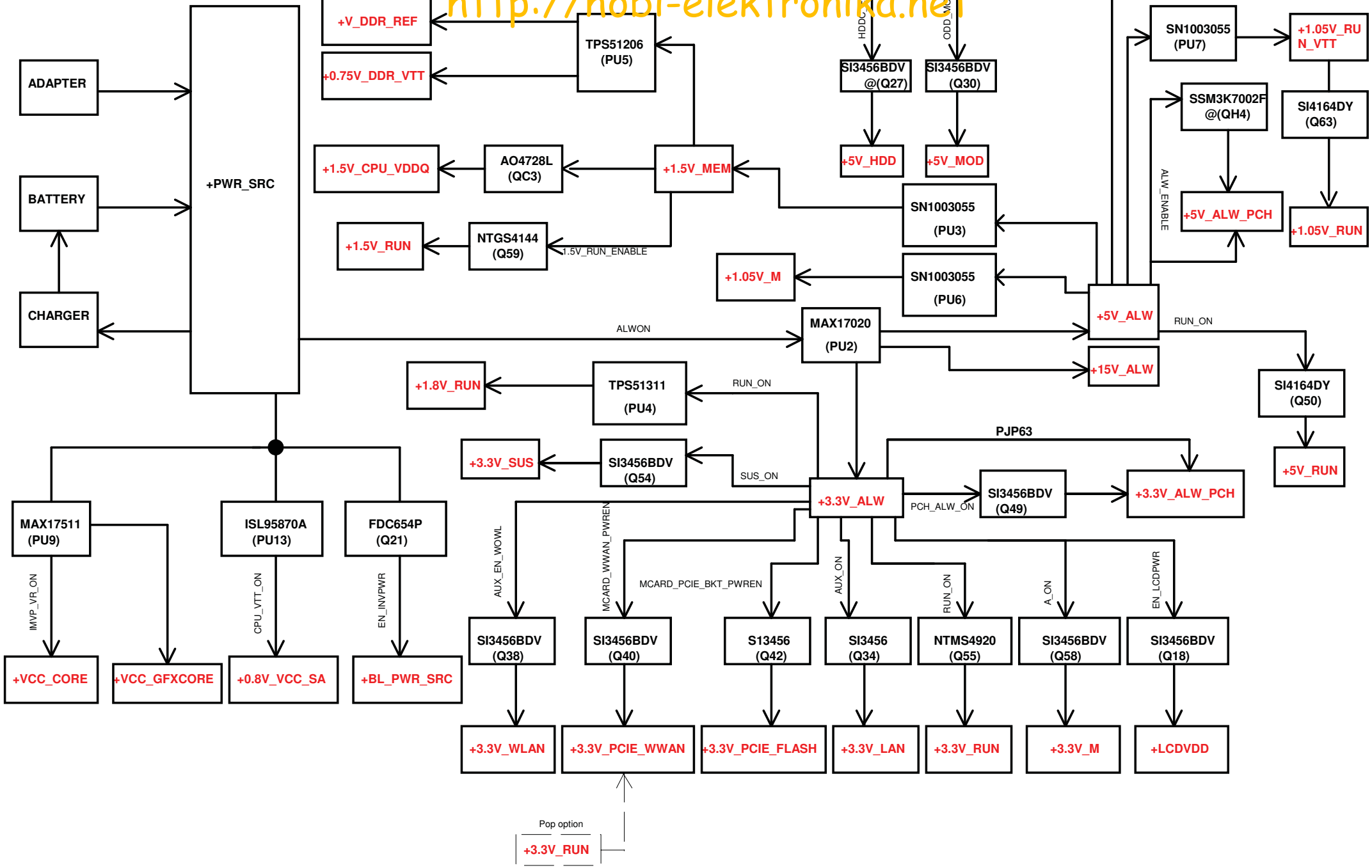

DELL CONFIDENTIAL/PROPRIETARY

PROPRIETARY NOTE: THIS SHEET OF ENGINEERING DRAWING AND SPECIFICATIONS CONTAINS CONFIDENTIAL TRADE SECRET AND OTHER PROPRIETARY INFORMATION OF DELL INC. ("DELL") THIS DOCUMENT MAY NOT BE TRANSFERRED OR COPIED WITHOUT THE EXPRESS WRITTEN AUTHORIZATION OF DELL. IN ADDITION, NEITHER THIS SHEET NOR THE INFORMATION IT CONTAINS WAY BE USED BY OR DISCLOSED TO ANY THIRD PARTY WITHOUT DELL'S EXPRESS WRITTEN CONSENT.

Compal Electronics, Inc.	
Title	Power Rail
Size	Document Number: LA-6611P
Rev	0.3
Date: Wednesday, January 26, 2011	Sheet 4 of 64

http://hobi-elektronika.net

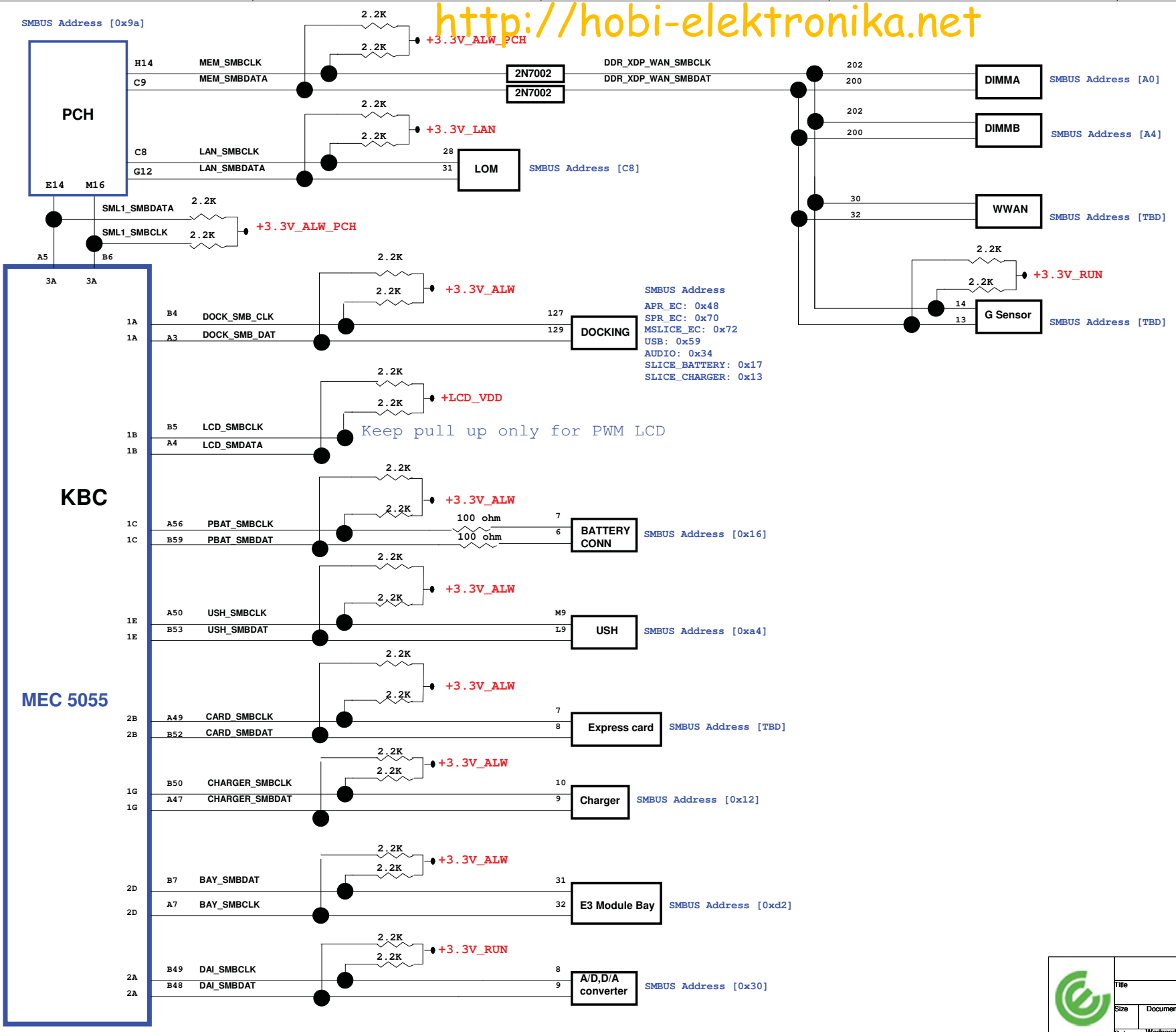

Compal Electronics, Inc.	
Title	SMBUS TOPOLOGY
Size / Document Number	LA-6611P
Rev	0.3
Date: Wednesday, January 26, 2011	Sheet 5 of 64

http://hobi-elektronika.net

(1)PEG_RCOMPO (G4) use 4mil connect to PEG_ICOMPI, then use 4mil connect to RC2
(2)PEG_ICOMPO use 12mil connect to RC2

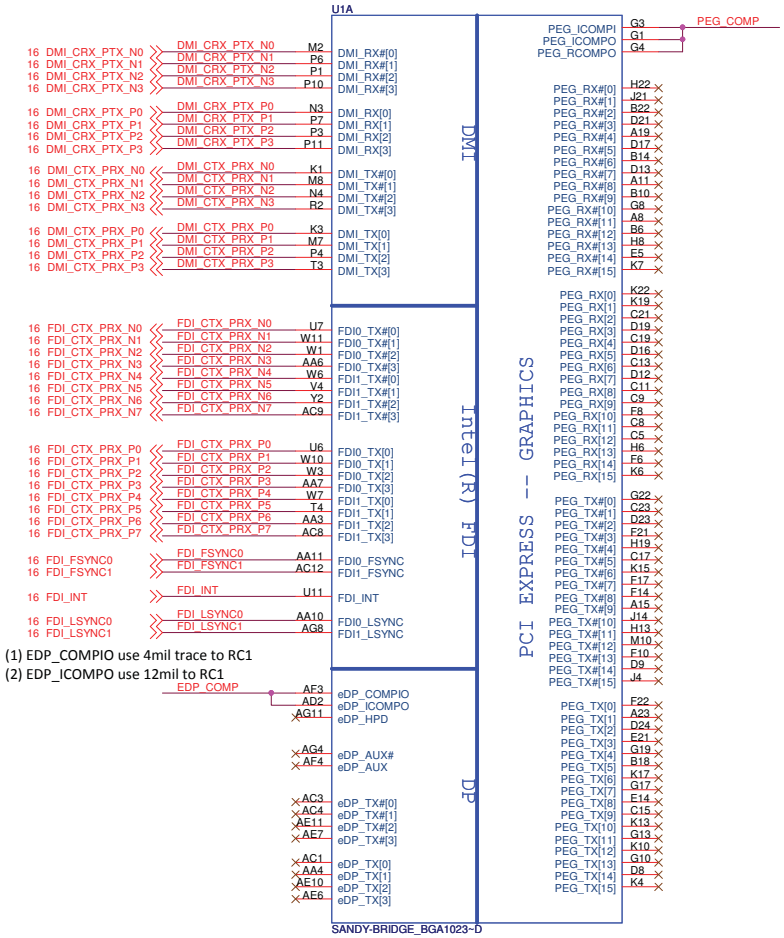

(1) EDP_COMPIO use 4mil trace to RC1
(2) EDP_ICOMPO use 12mil to RC1

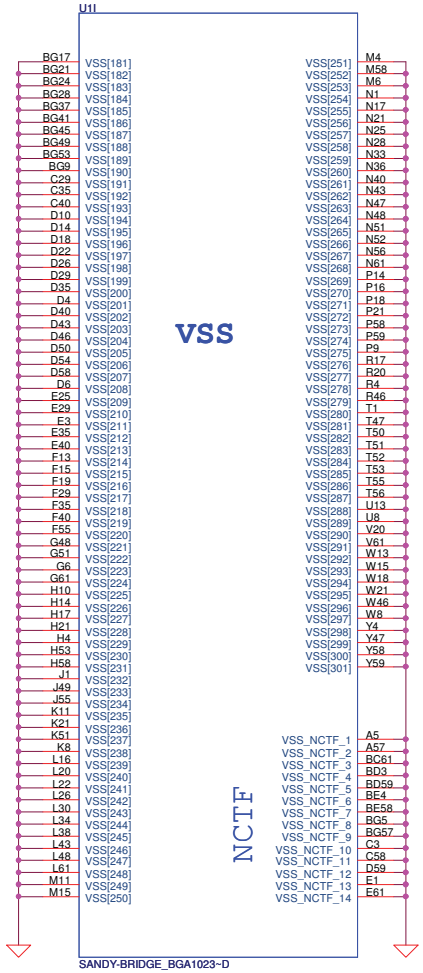

DP Compensation

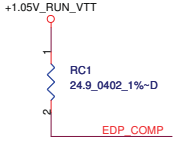

PEG Compensation

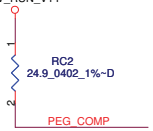

eDP_COMPIO and ICOMPO signals should be shorted near balls and routed with typical impedance <25 mohms

PEG_ICOMPI and RCOMPO signals should be shorted and routed with - max length = 500 mils - typical impedance = 43 mohms
PEG_ICOMPO signals should be routed with - max length = 500 mils - typical impedance = 14.5 mohms

DELL CONFIDENTIAL/PROPRIETARY

PROPRIETARY NOTE: THIS SHEET OF ENGINEERING DRAWING AND SPECIFICATIONS CONTAINS CONFIDENTIAL TRADE SECRET AND OTHER PROPRIETARY INFORMATION OF DELL INC. ("DELL") THIS DOCUMENT MAY NOT BE TRANSFERRED OR COPIED WITHOUT THE EXPRESS WRITTEN AUTHORIZATION OF DELL. IN ADDITION, NEITHER THIS SHEET NOR THE INFORMATION IT CONTAINS WAY BE USED BY OR DISCLOSED TO ANY THIRD PARTY WITHOUT DELL'S EXPRESS WRITTEN CONSENT.

Compal Electronics, Inc.			
Title: Sandy Bridge (1/6)			
Size	Document Number: LA-6611P		Rev 0.3
Date: Wednesday, January 26, 2011	Sheet 6 of 64		

http://hobi-elektronika.net

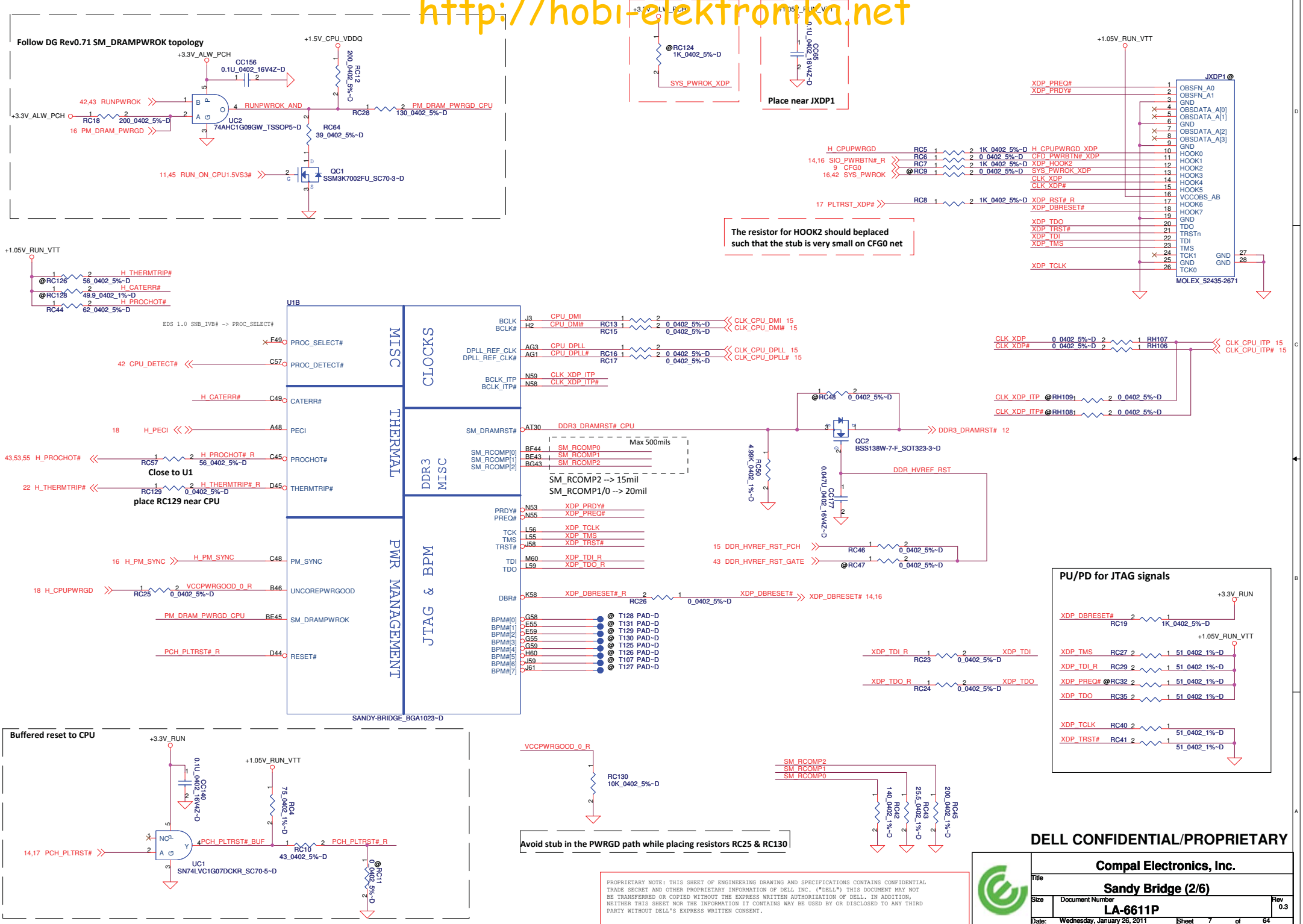

PROPRIETARY NOTE: THIS SHEET OF ENGINEERING DRAWING AND SPECIFICATIONS CONTAINS CONFIDENTIAL TRADE SECRET AND OTHER PROPRIETARY INFORMATION OF DELL INC. ("DELL") THIS DOCUMENT MAY NOT BE TRANSFERRED OR COPIED WITHOUT THE EXPRESS WRITTEN AUTHORIZATION OF DELL. IN ADDITION, NEITHER THIS SHEET NOR THE INFORMATION IT CONTAINS WAY BE USED BY OR DISCLOSED TO ANY THIRD PARTY WITHOUT DELL'S EXPRESS WRITTEN CONSENT.

DELL CONFIDENTIAL/PROPRIETARY

Compal Electronics, Inc.		
Title: Sandy Bridge (2/6)		
Size	Document Number: LA-6611P	Rev 0.3
Date: Wednesday, January 26, 2011	Sheet 7 of 64	

http://hobi-elektronika.net

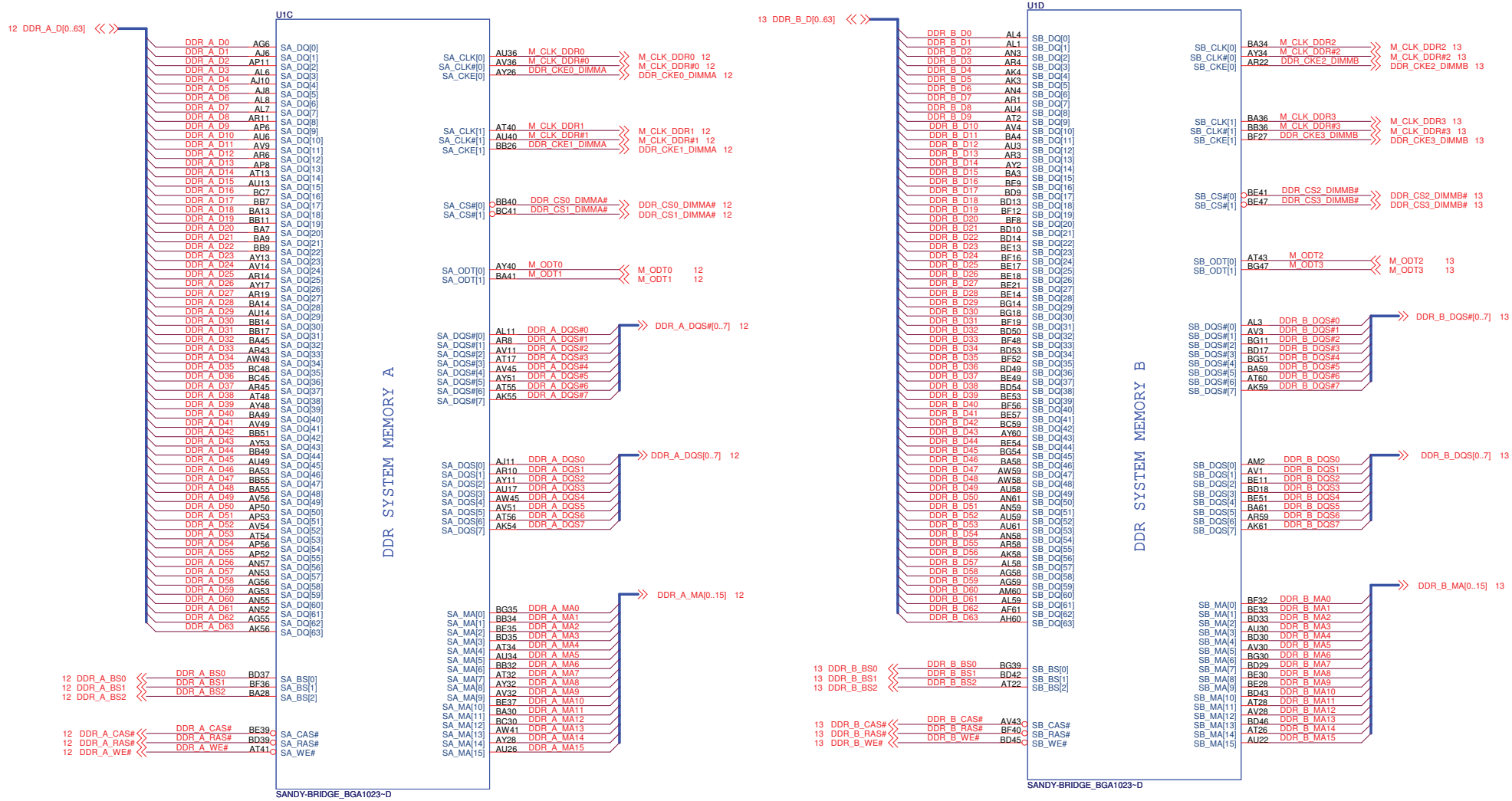

PROPRIETARY NOTE: THIS SHEET OF ENGINEERING DRAWING AND SPECIFICATIONS CONTAINS CONFIDENTIAL TRADE SECRET AND OTHER PROPRIETARY INFORMATION OF DELL INC. ("DELL") THIS DOCUMENT MAY NOT BE TRANSFERRED OR COPIED WITHOUT THE EXPRESS WRITTEN AUTHORIZATION OF DELL. IN ADDITION, NEITHER THIS SHEET NOR THE INFORMATION IT CONTAINS WAY BE USED BY OR DISCLOSED TO ANY THIRD PARTY WITHOUT DELL'S EXPRESS WRITTEN CONSENT.

DELL CONFIDENTIAL/PROPRIETARY

Compal Electronics, Inc.

Title: Sandy Bridge (3/6)

Size | Document Number: LA-6611P | Rev: 0.3

Date: Wednesday, January 26, 2011 | Sheet 8 of 64

http://hobi-elektronika.net

CFG Straps for Processor

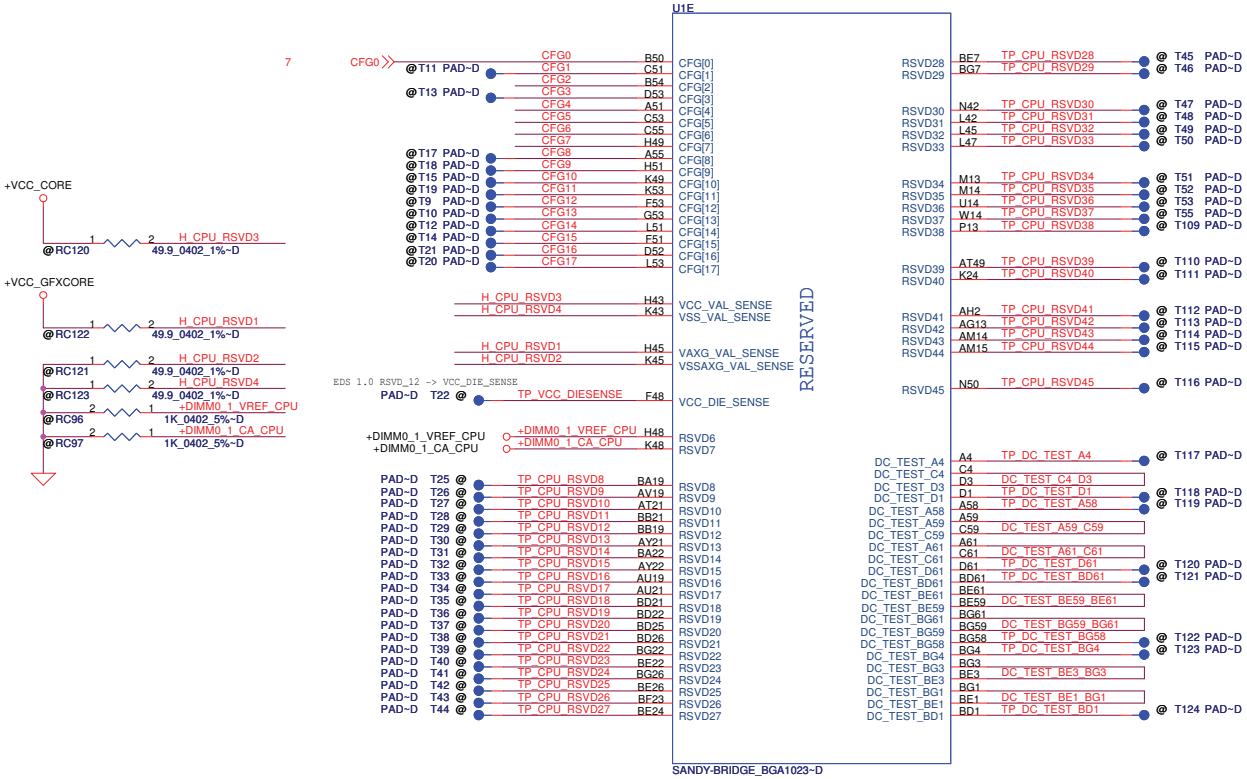

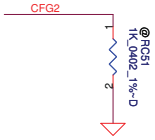

PEG Static Lane Reversal - CFG2 is for the 16x	
CFG2	1:(Default) Normal Operation; Lane # definition matches socket pin map definition 0:Lane Reversed

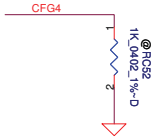

Display Port Presence Strap	
CFG4	1 : Disabled; No Physical Display Port attached to Embedded Display Port 0 : Enabled; An external Display Port device is connected to the Embedded Display Port

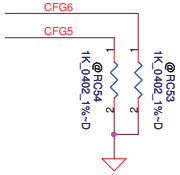

PCIE Port Bifurcation Straps	
CFG[6:5]	11: (Default) x16 - Device 1 functions 1 and 2 disabled 10: x8, x8 - Device 1 function 1 enabled ; function 2 disabled 01: Reserved - (Device 1 function 1 disabled ; function 2 enabled) 00: x8,x4,x4 - Device 1 functions 1 and 2 enabled

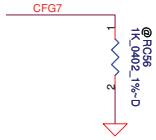

PEG DEFER TRAINING	
CFG7	1: (Default) PEG Train immediately following xxRESETB de assertion 0: PEG Wait for BIOS for training

DELL CONFIDENTIAL/PROPRIETARY

PROPRIETARY NOTE: THIS SHEET OF ENGINEERING DRAWING AND SPECIFICATIONS CONTAINS CONFIDENTIAL TRADE SECRET AND OTHER PROPRIETARY INFORMATION OF DELL INC. ("DELL") THIS DOCUMENT MAY NOT BE TRANSFERRED OR COPIED WITHOUT THE EXPRESS WRITTEN AUTHORIZATION OF DELL. IN ADDITION, NEITHER THIS SHEET NOR THE INFORMATION IT CONTAINS WAY BE USED BY OR DISCLOSED TO ANY THIRD PARTY WITHOUT DELL'S EXPRESS WRITTEN CONSENT.

http://hobi-elektronika.net

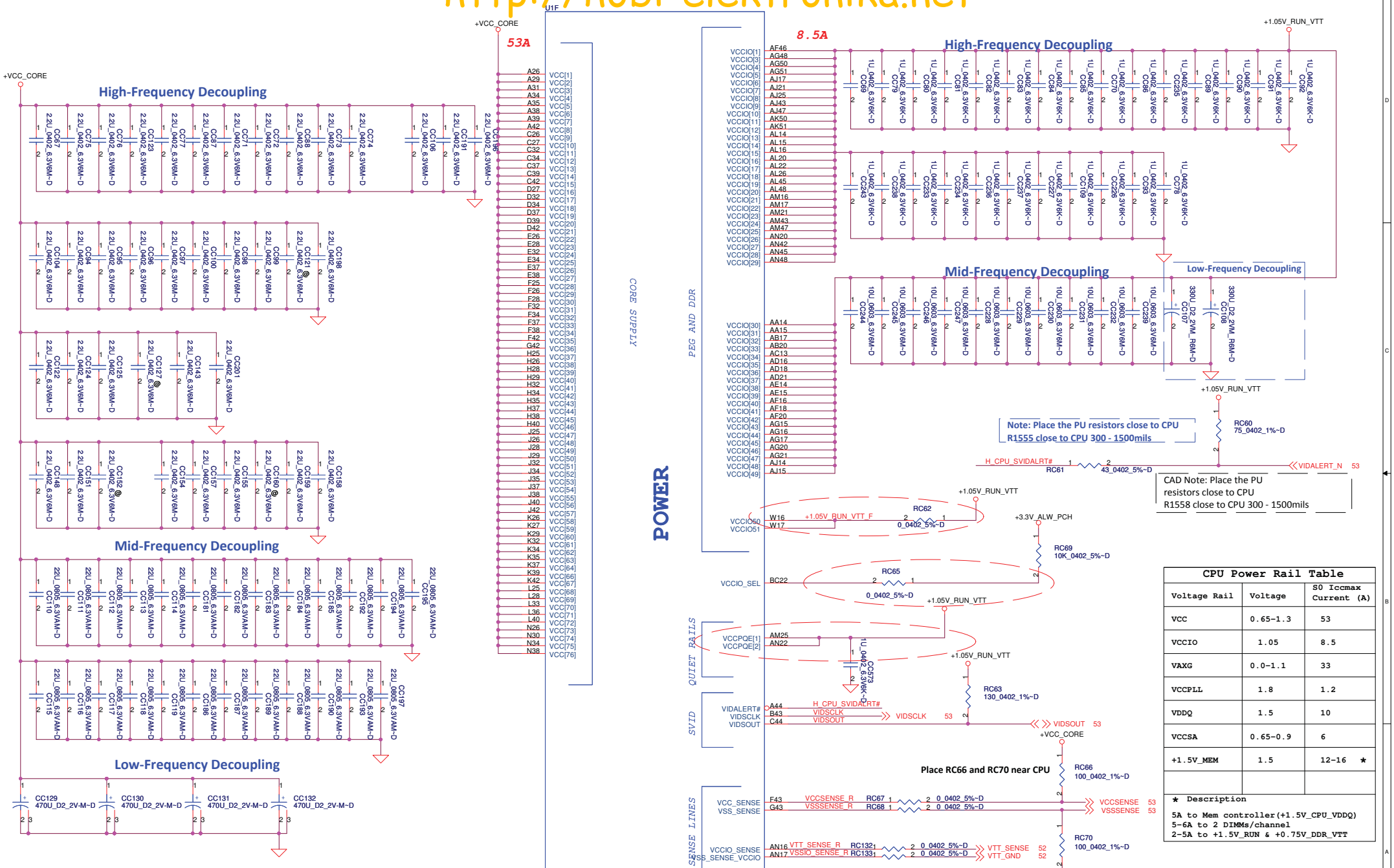

CPU Power Rail Table		
Voltage Rail	Voltage	S0 Iccmax Current (A)
VCC	0.65-1.3	53
VCCIO	1.05	8.5
VAXG	0.0-1.1	33
VCCPLL	1.8	1.2
VDDQ	1.5	10
VCCSA	0.65-0.9	6
+1.5V_MEM	1.5	12-16 ★

★ Description
5A to Mem controller(+1.5V_CPU_VDDQ)
5-6A to 2 DIMMs/channel
2-5A to +1.5V_RUN & +0.75V_DDR_VTT

PROPRIETARY NOTE: THIS SHEET OF ENGINEERING DRAWING AND SPECIFICATIONS CONTAINS CONFIDENTIAL TRADE SECRET AND OTHER PROPRIETARY INFORMATION OF DELL INC. ("DELL") THIS DOCUMENT MAY NOT BE TRANSFERRED OR COPIED WITHOUT THE EXPRESS WRITTEN AUTHORIZATION OF DELL. IN ADDITION, NEITHER THIS SHEET NOR THE INFORMATION IT CONTAINS WAY BE USED BY OR DISCLOSED TO ANY THIRD PARTY WITHOUT DELL'S EXPRESS WRITTEN CONSENT.

DELL CONFIDENTIAL/PROPRIETARY

Compal Electronics, Inc.

Title: Sandy Bridge (5/6)

Size | Document Number: LA-6611P | Rev: 0.3

Date: Wednesday, January 26, 2011 | Sheet 10 of 64

http://hobi-elektronika.net

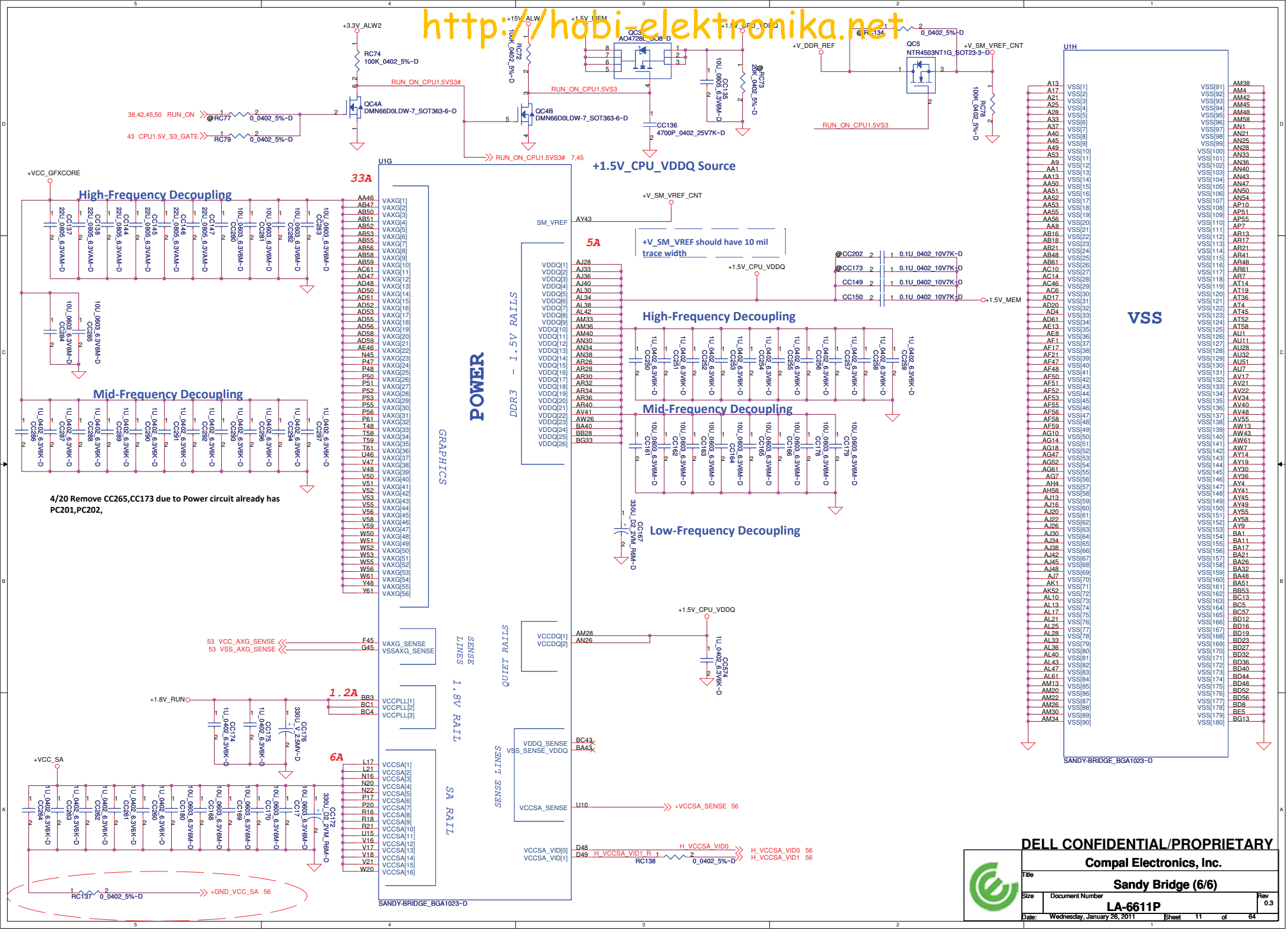

DELL CONFIDENTIAL/PROPRIETARY

Compal Electronics, Inc.

Title: Sandy Bridge (6/6)

Size | Document Number: LA-6611P | Rev: 0.3

Date: Wednesday, January 26, 2011 | Sheet 11 of 64

http://hobi-elektronika.net

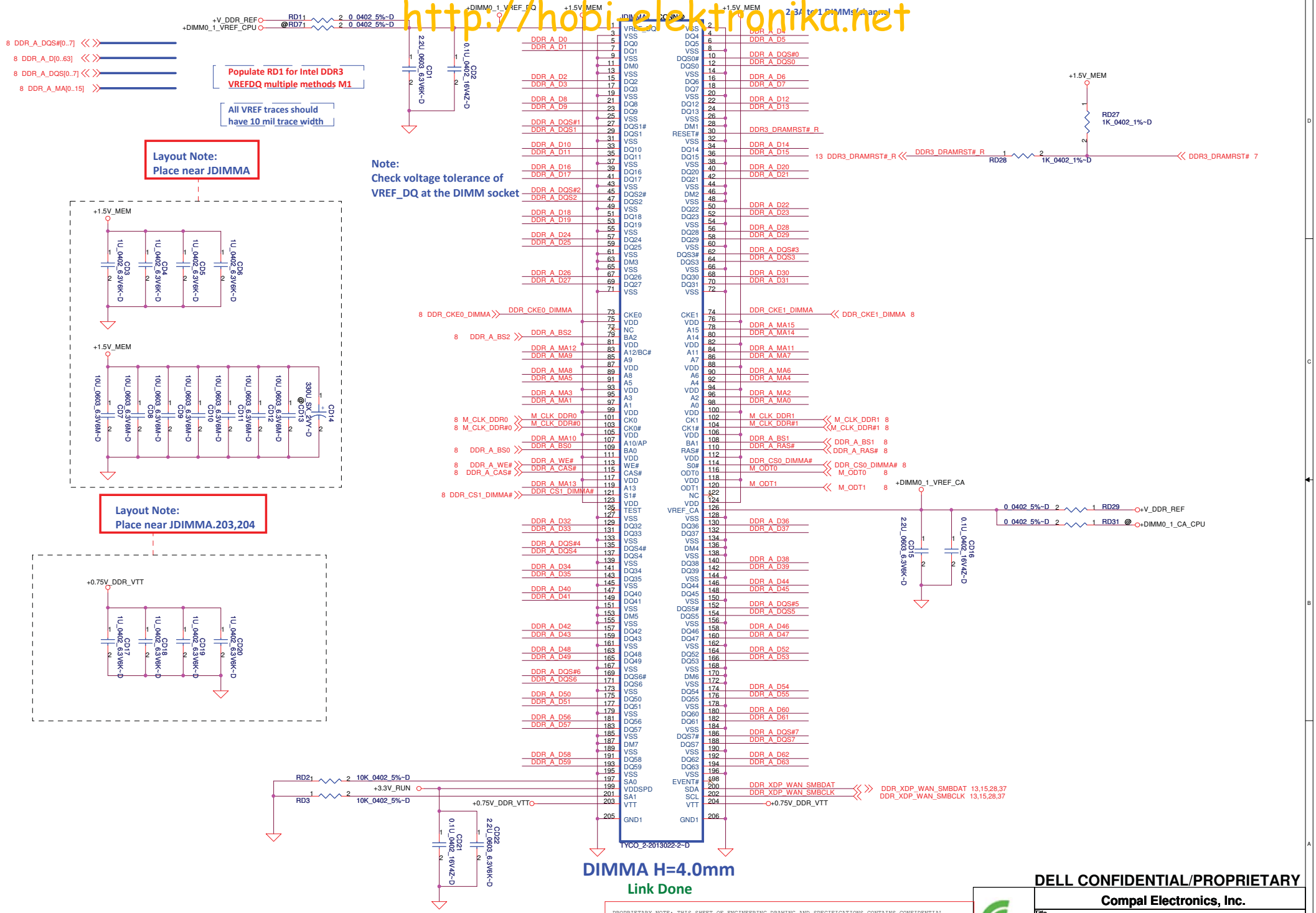

PROPRIETARY NOTE: THIS SHEET OF ENGINEERING DRAWING AND SPECIFICATIONS CONTAINS CONFIDENTIAL TRADE SECRET AND OTHER PROPRIETARY INFORMATION OF DELL INC. ("DELL") THIS DOCUMENT MAY NOT BE TRANSFERRED OR COPIED WITHOUT THE EXPRESS WRITTEN AUTHORIZATION OF DELL. IN ADDITION, NEITHER THIS SHEET NOR THE INFORMATION IT CONTAINS WAY BE USED BY OR DISCLOSED TO ANY THIRD PARTY WITHOUT DELL'S EXPRESS WRITTEN CONSENT.

DELL CONFIDENTIAL/PROPRIETARY

Compal Electronics, Inc.

Title: DDRIII-SODIMM SLOT1

Size | Document Number: LA-6611P | Rev: 0.3

Date: Wednesday, January 26, 2011 | Sheet 12 of 64

http://hobi-elektronika.net

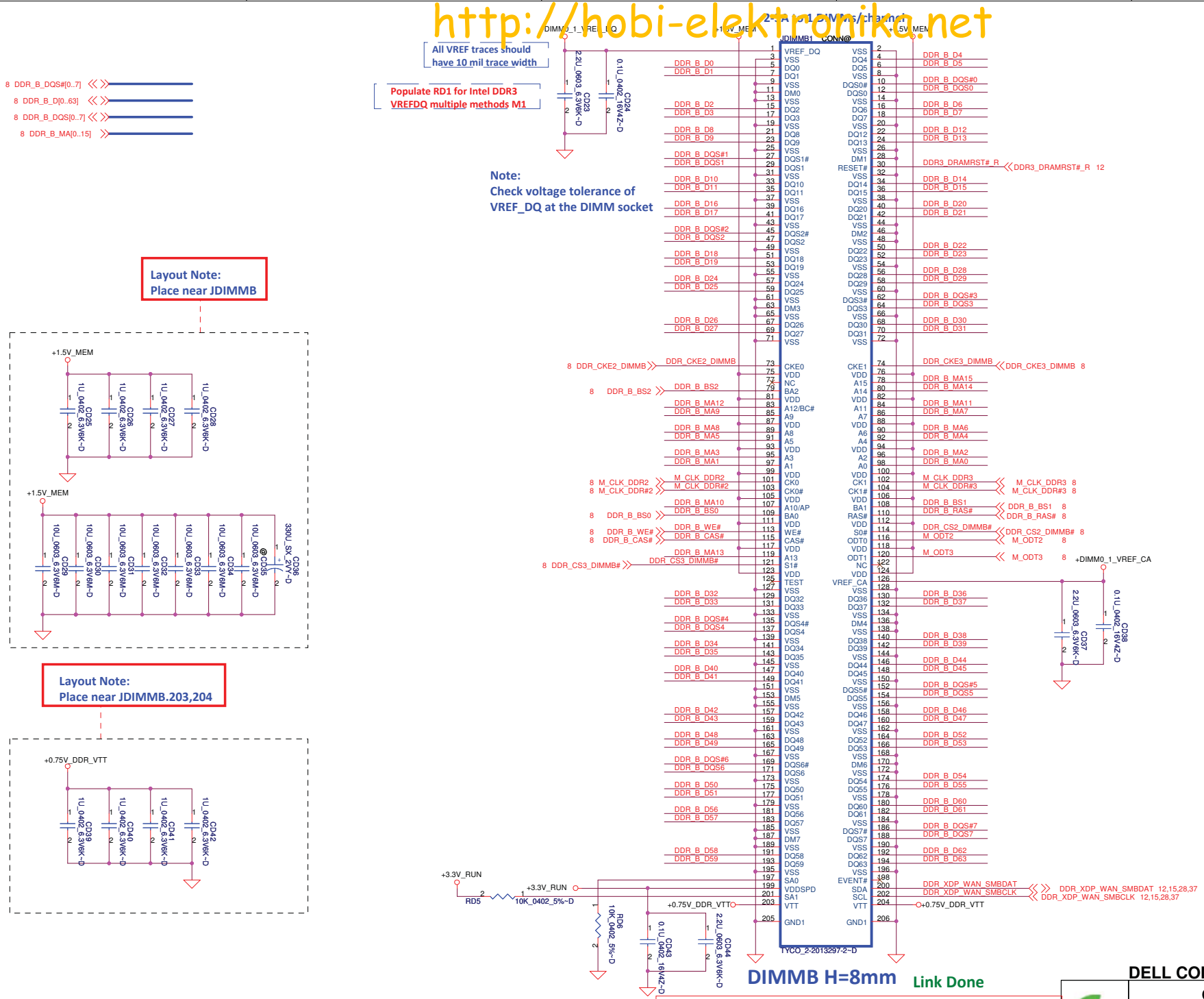

PROPRIETARY NOTE: THIS SHEET OF ENGINEERING DRAWING AND SPECIFICATIONS CONTAINS CONFIDENTIAL TRADE SECRET AND OTHER PROPRIETARY INFORMATION OF DELL INC. ("DELL") THIS DOCUMENT MAY NOT BE TRANSFERRED OR COPIED WITHOUT THE EXPRESS WRITTEN AUTHORIZATION OF DELL. IN ADDITION, NEITHER THIS SHEET NOR THE INFORMATION IT CONTAINS WAY BE USED BY OR DISCLOSED TO ANY THIRD PARTY WITHOUT DELL'S EXPRESS WRITTEN CONSENT.

DELL CONFIDENTIAL/PROPRIETARY

Compal Electronics, Inc.

Title: DDRIII-SODIMM SLOT2

Size: | Document Number: LA-6611P | Rev: 0.3

Date: Wednesday, January 26, 2011 | Sheet 13 of 64

http://hobi-elektronika.net

CMOS_CLR1	CMOS setting
Shunt	Clear CMOS
Open	Keep CMOS

ME_CLR1	TPM setting
Shunt	Clear ME RTC Registers
Open	Keep ME RTC Registers

PCH_AZ_SYNC is sampled at the rising edge of RSMRST# pin. So signal should be PU to the ALWAYS rail.

No Reboot Strap	
SPKR	Low = Default
	High = No Reboot

On Die PLL VR is supplied by 1.5V when sampled high, 1.8 V when sampled low

INTVRMEN- Integrated SUS 1.1V VRM Enable
High - Enable Internal VRs
Low - Enable External VRs

CH6 clsoe to JXDP2

CH1 clsoe to JXDP2

JXDP2@ MOLEX_52435-2671

UH4A BD82CPMS-QMVY-A1_FCBGA989~D

LPC: FWH0 / LAD0, FWH1 / LAD1, FWH2 / LAD2, FWH3 / LAD3, FWH4 / LFRAME#, LDRQ0#, LDRQ1# / GPIO23, SERIRQ

RTC: RTCX1, RTCX2, RTCRST#, SRTCRST#, INTRUDER#, INTVRMEN

HDA: HDA_BCLK, HDA_SYNC, SPKR, HDA_RST#, HDA_SDIN0, HDA_SDIN1, HDA_SDIN2, HDA_SDIN3, HDA_SDO, HDA_DOCK_EN# / GPIO33, HDA_DOCK_RST# / GPIO13

JTAG: JTAG_TCK, JTAG_TMS, JTAG_TDI, JTAG_TDO

SPI: SPI_CLK, SPI_CS0#, SPI_CS1#, SPI_MOSI, SPI_MISO

SATA: SATA 6G, SATA0RXN, SATA0RXP, SATA0TXN, SATA0TXP, SATA1RXN, SATA1RXP, SATA1TXN, SATA1TXP, SATA2RXN, SATA2RXP, SATA2TXN, SATA2TXP, SATA3RXN, SATA3RXP, SATA3TXN, SATA3TXP, SATA4RXN, SATA4RXP, SATA4TXN, SATA4TXP, SATA5RXN, SATA5RXP, SATA5TXN, SATA5TXP, SATAICOMPO, SATAICOMPI, SATA3RCOMPO, SATA3COMPI, SATA3RBIAS, SATALED#, SATA0GP / GPIO21, SATA1GP / GPIO19

HDD: PSATA_PRX_DTX_N0_C 28, PSATA_PRX_DTX_P0_C 28, PSATA_PTX_DRX_N0_C 28, PSATA_PTX_DRX_P0_C 28

ODD/ E Module Bay: SATA_ODD_PRX_DTX_N1_C 29, SATA_ODD_PRX_DTX_P1_C 29, SATA_ODD_PTX_DRX_N1_C 29, SATA_ODD_PTX_DRX_P1_C 29

E-SATA: ESATA_PRX_DTX_N4_C 40, ESATA_PRX_DTX_P4_C 40, ESATA_PTX_DRX_N4_C 40, ESATA_PTX_DRX_P4_C 40

DOCK: SATA_PRX_DKTX_N5_C 41, SATA_PRX_DKTX_P5_C 41, SATA_PTX_DKRX_N5_C 41, SATA_PTX_DKRX_P5_C 41

JP1 CONN@ TYCO_5-1775013-4~D

Link Done

U52 X76ROM@ W25Q64BVSSIG_SO8~D

200 MIL SO8
64Mb Flash ROM

U53 X76ROM@ W25Q16BVSSIG_SO8~D

200 MIL SO8
16Mb Flash ROM

R936 colay R895 for TAA

R944 colay R897 for TAA

R943 colay R900 for TAA

Intel review feed back

BBS_BIT0 - BIOS BOOT STRAP BIT 0

SATA0GP PD simulates the drive status. For proper function of the hot plug, this R1597 must be "No Shunt" when respective drive is removed and "Shunt" after the respective drive is plugged in.

SPI_MOSI
High: Enable Intel Anti-Theft Technology
Left floating: Disable Intel Anti-Theft Technology

DELL CONFIDENTIAL/PROPRIETARY

Compal Electronics, Inc.

Title: PCH (1/8)

Size | Document Number: LA-6611P | Rev 0.3

Date: Wednesday, January 26, 2011 | Sheet 14 of 64

http://hobi-elektronika.net

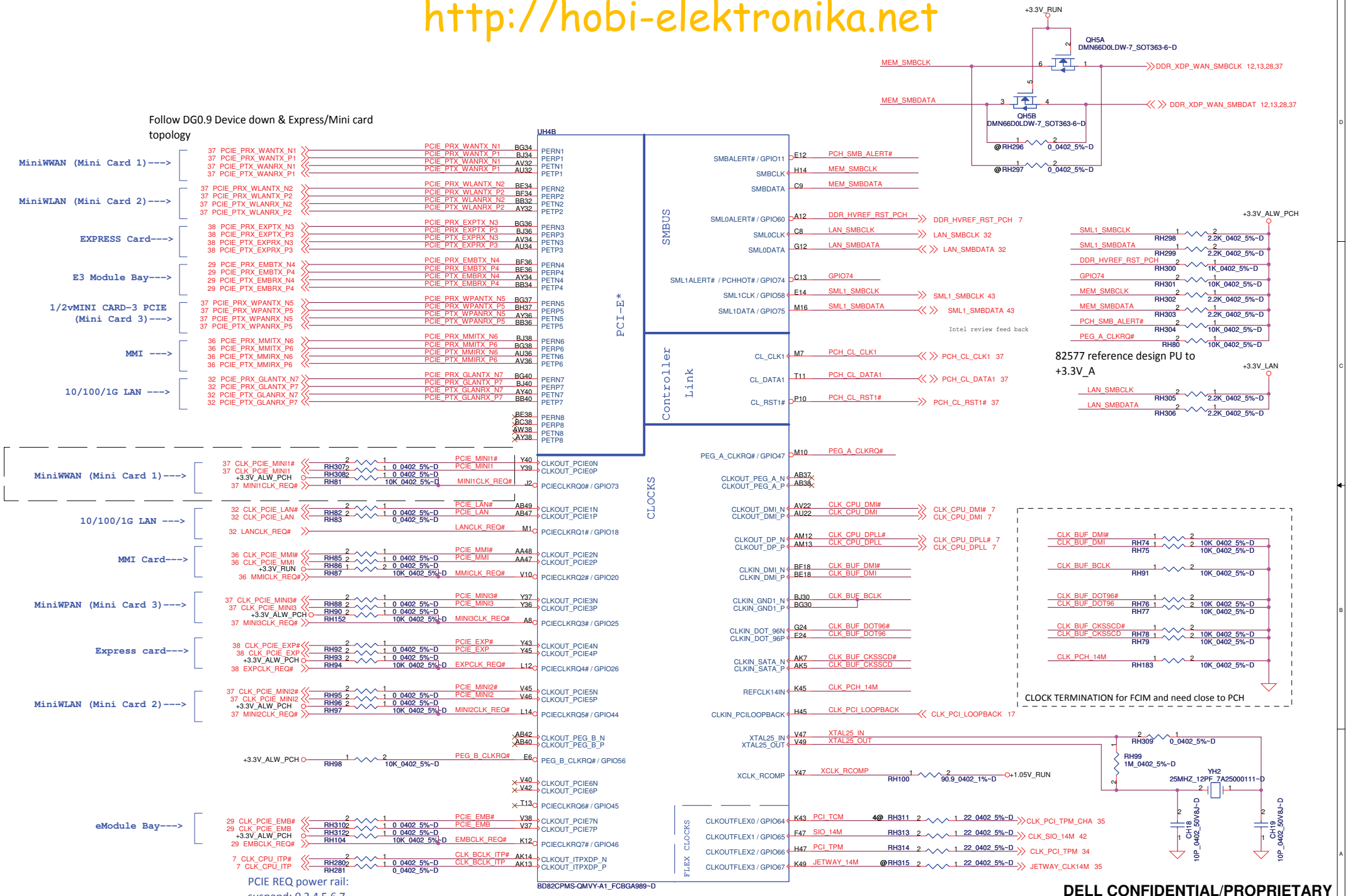

PROPRIETARY NOTE: THIS SHEET OF ENGINEERING DRAWING AND SPECIFICATIONS CONTAINS CONFIDENTIAL TRADE SECRET AND OTHER PROPRIETARY INFORMATION OF DELL INC. ("DELL") THIS DOCUMENT MAY NOT BE TRANSFERRED OR COPIED WITHOUT THE EXPRESS WRITTEN AUTHORIZATION OF DELL. IN ADDITION, NEITHER THIS SHEET NOR THE INFORMATION IT CONTAINS WAY BE USED BY OR DISCLOSED TO ANY THIRD PARTY WITHOUT DELL'S EXPRESS WRITTEN CONSENT.

DELL CONFIDENTIAL/PROPRIETARY

Compal Electronics, Inc.

Title	PCH (2/8)
Size	
Document Number	LA-6611P
Rev	0.3
Date: Wednesday, January 26, 2011	Sheet 15 of 64

http://hobi-elektronika.net

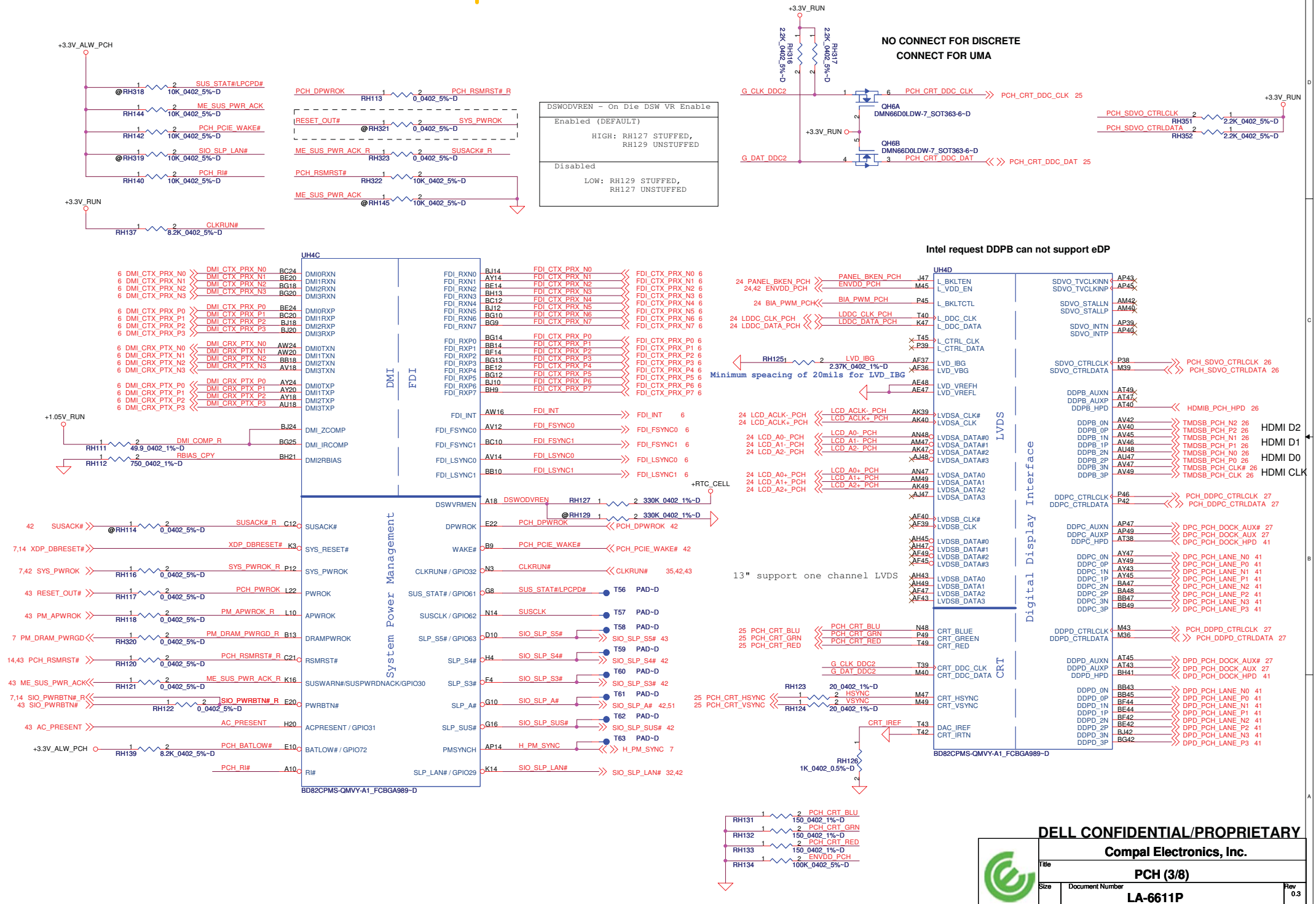

DELL CONFIDENTIAL/PROPRIETARY

Compal Electronics, Inc.

Title: **PCH (3/8)**

Size | Document Number: **LA-6611P** | Rev: 0.3

Date: Wednesday, January 26, 2011 | Sheet 16 of 64

http://hobi-elektronika.net

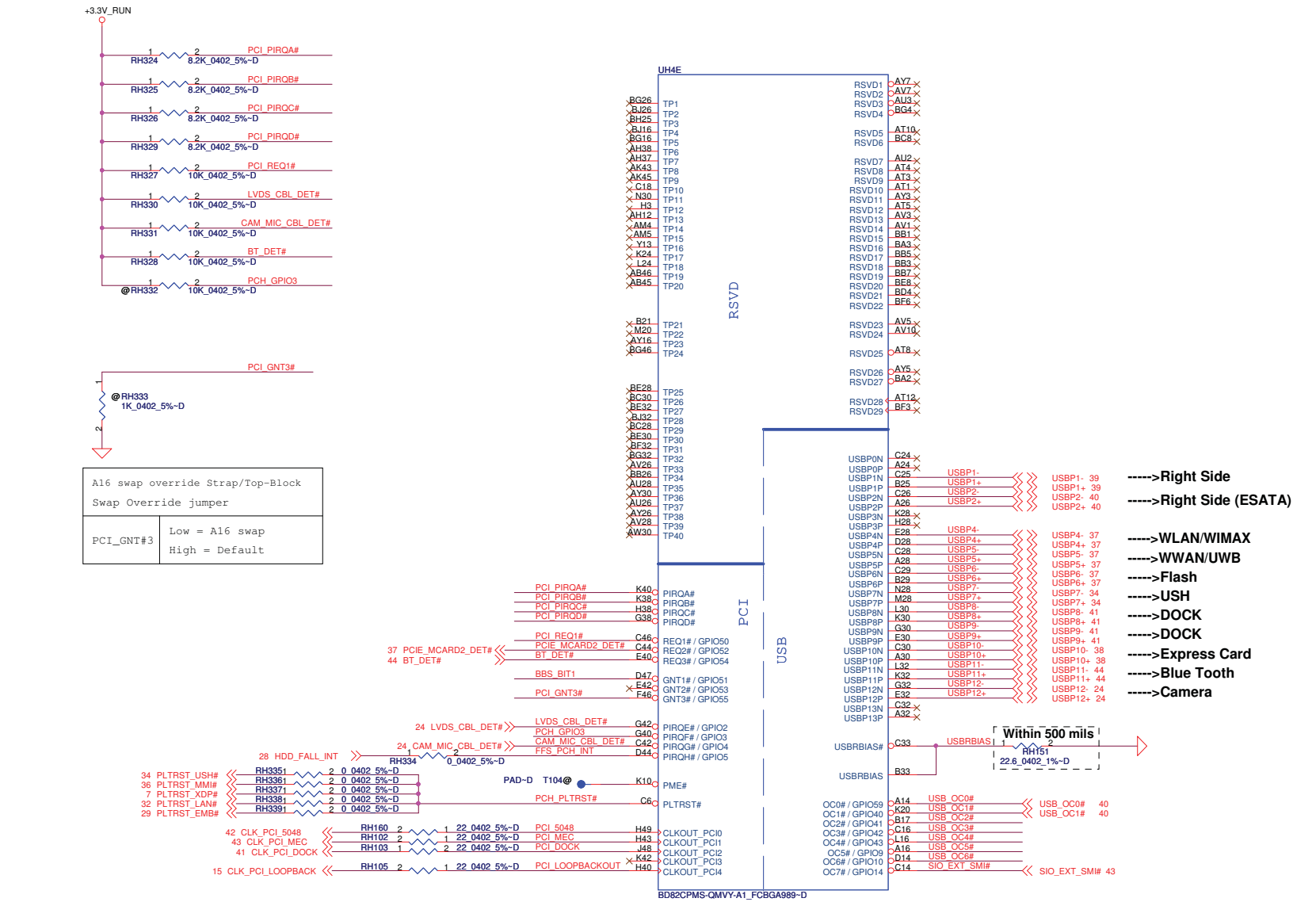

A16 swap override Strap/Top-Block Swap Override jumper	
PCI_GNT#3	Low = A16 swap High = Default

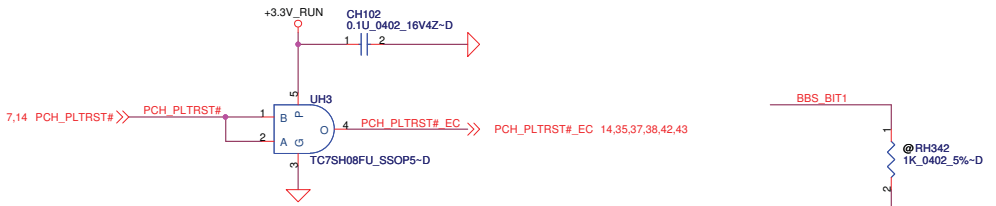

Boot BIOS Strap		
BBS_BIT1	SATA_SLPD (BBS_BIT0)	Boot BIOS Location
0	0	LPC
0	1	Reserved (NAND)
1	0	PCI
1	1	SPI

DELL CONFIDENTIAL/PROPRIETARY

Compal Electronics, Inc.

Title: PCH (4/8)

Size | Document Number: LA-6611P | Rev: 0.3

Date: Wednesday, January 26, 2011 | Sheet 17 of 64

http://hobi-elektronika.net

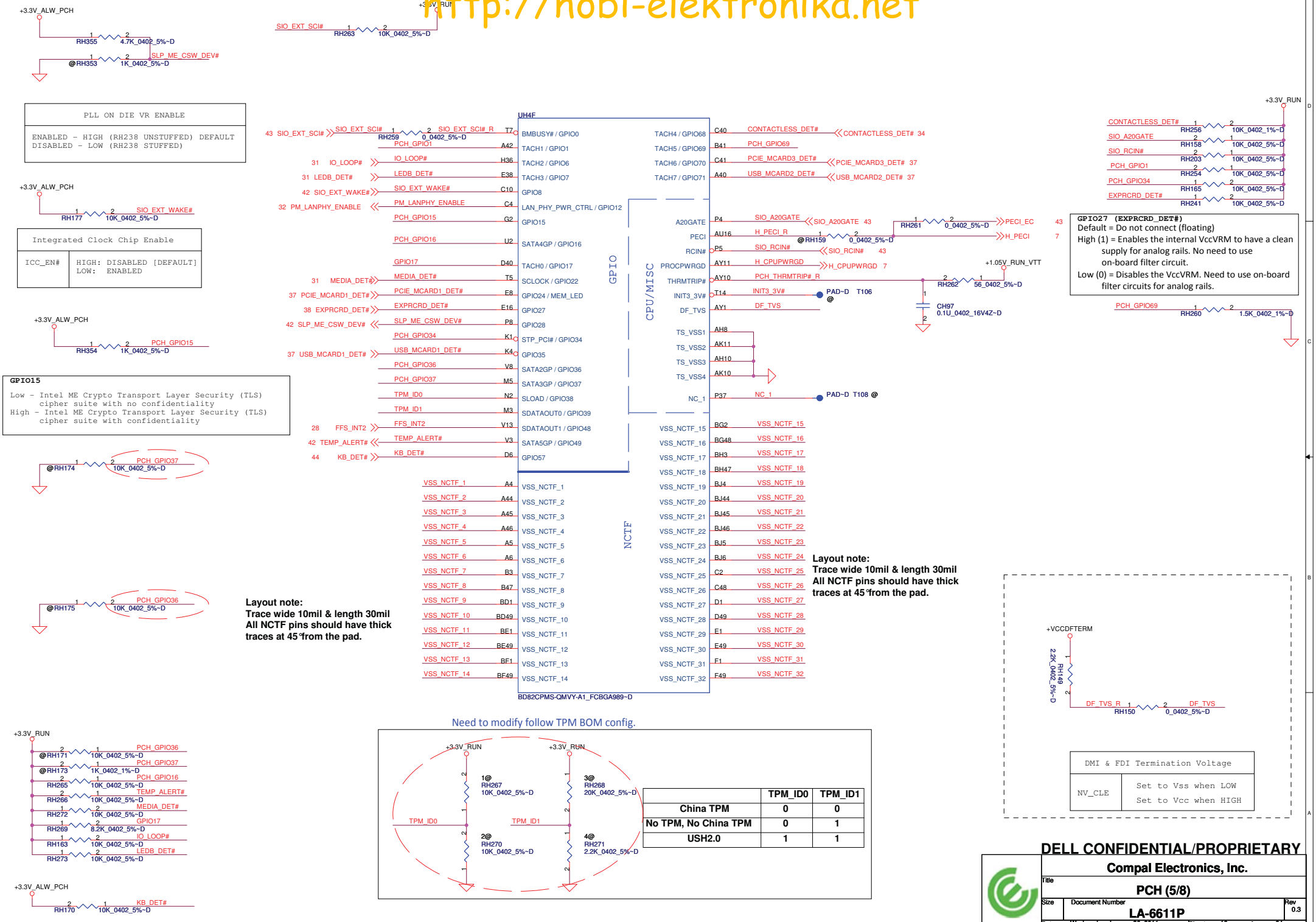

	TPM_ID0	TPM_ID1
China TPM	0	0
No TPM, No China TPM	0	1
USH2.0	1	1

DELL CONFIDENTIAL/PROPRIETARY

Compal Electronics, Inc.

Title: **PCH (5/8)**

Size | Document Number: **LA-6611P** | Rev: 0.3

Date: Wednesday, January 26, 2011 | Sheet 18 of 64

http://hobi-elektronika.net

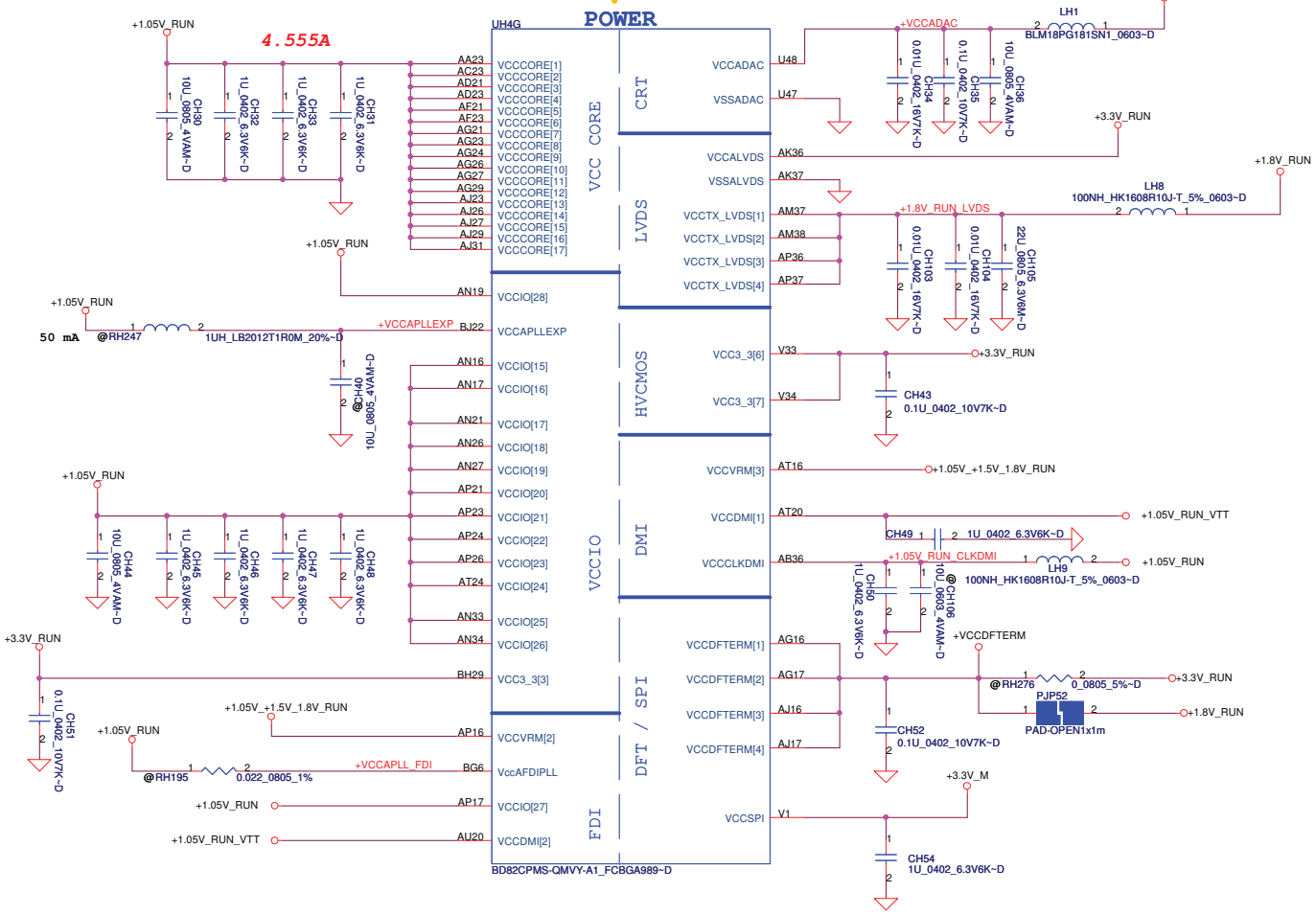

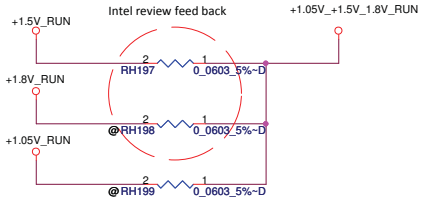

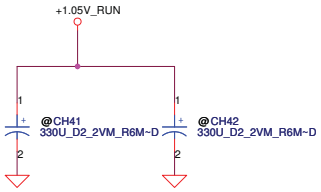

PCH Power Rail Table		
Voltage Rail	Voltage	S0 Iccmax Current (A)
V_PROC_IO	1.05	0.001
V5REF	5	0.001
V5REF_Sus	5	0.001
Vcc3_3	3.3	0.266
VccADAC3	3.3	0.001
VccADPLLA	1.05	0.08
VccADPLLB	1.05	0.08
VccCore	1.05	1.3
VccDMI	1.05	0.042
VccIO	1.05	2.925
VccASW	1.05	1.01
VccSPI	3.3	0.020
VccDSW3_3	3.3	0.003
+VCCDFTERM	1.8	0.19
VccRTC	3.3	2 (mA)
VccSus3_3	3.3	0.119
VccSusHDA	3.3	0.01
VccVRM	1.8 / 1.5	0.16
VccClkDMI	1.05	0.02
VccSSC	1.05	0.095
VccDIFFCLKN	1.05	0.055
VccALVDS	3.3	0.001
VccTX_LVDS	1.8	0.06

PROPRIETARY NOTE: THIS SHEET OF ENGINEERING DRAWING AND SPECIFICATIONS CONTAINS CONFIDENTIAL TRADE SECRET AND OTHER PROPRIETARY INFORMATION OF DELL INC. ("DELL") THIS DOCUMENT MAY NOT BE TRANSFERRED OR COPIED WITHOUT THE EXPRESS WRITTEN AUTHORIZATION OF DELL. IN ADDITION, NEITHER THIS SHEET NOR THE INFORMATION IT CONTAINS WAY BE USED BY OR DISCLOSED TO ANY THIRD PARTY WITHOUT DELL'S EXPRESS WRITTEN CONSENT.

http://hobi-elektronika.net

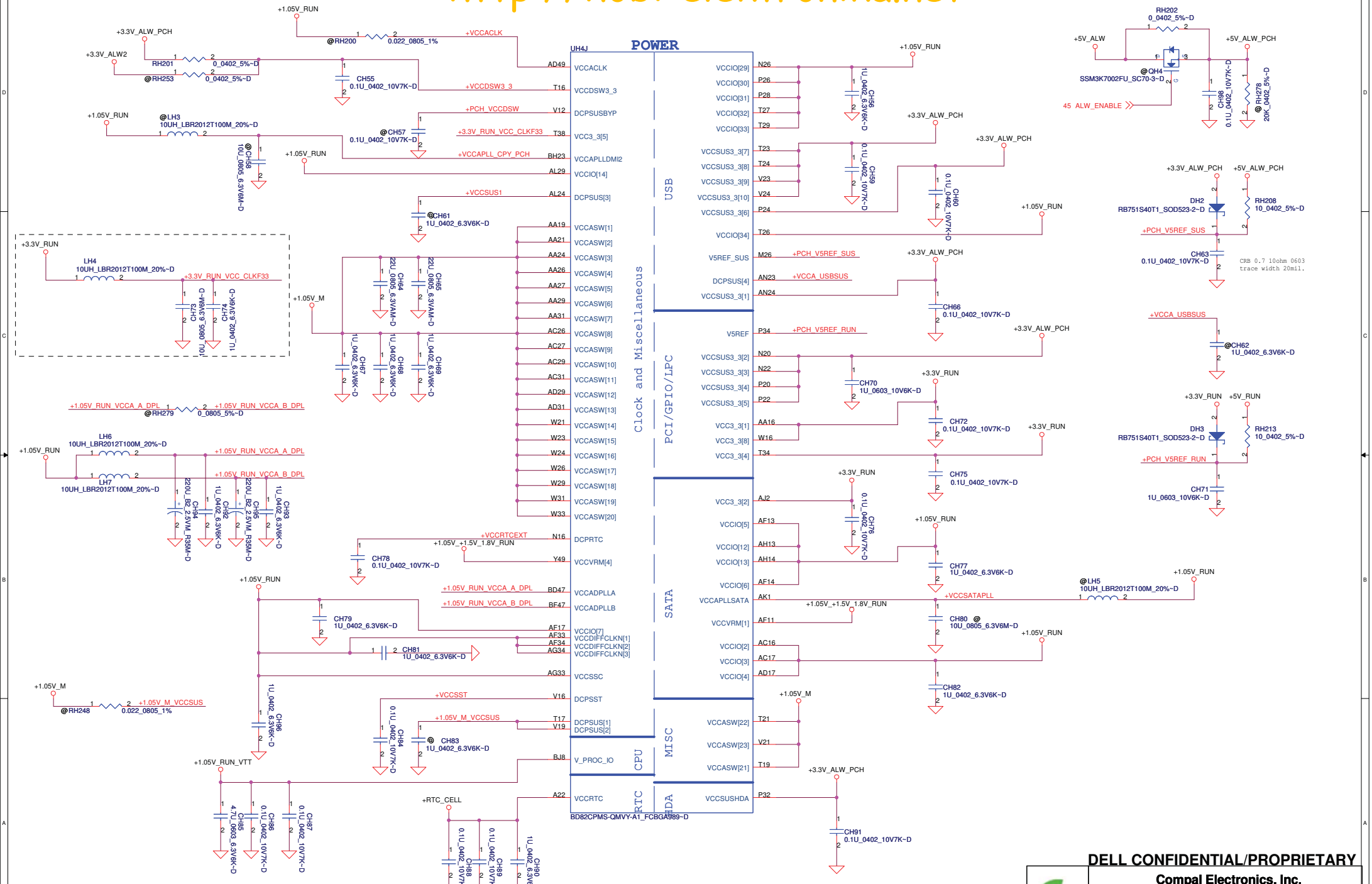

DELL CONFIDENTIAL/PROPRIETARY

Compal Electronics, Inc.

Title	PCH (7/8)	
Size	Document Number: LA-6611P	Rev 0.3
Date: Wednesday, January 26, 2011	Sheet 20 of 64	

http://hobi-elektronika.net

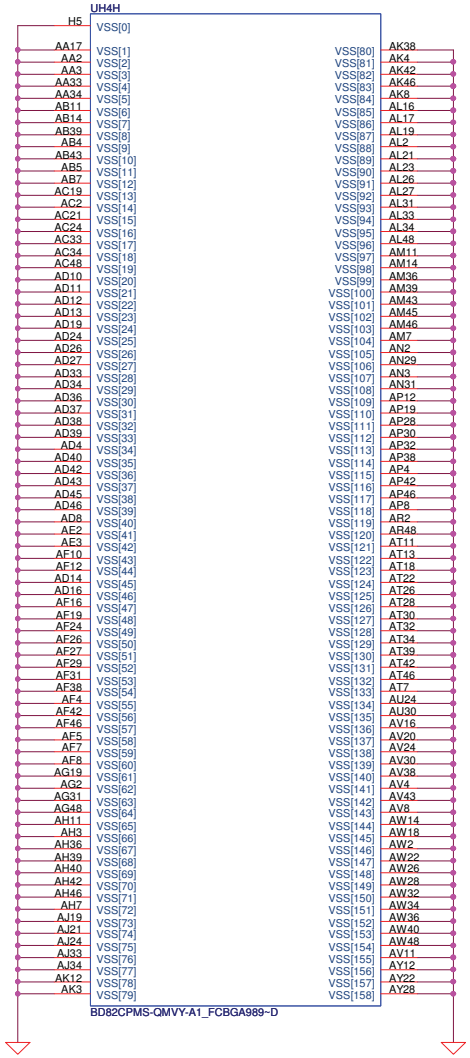

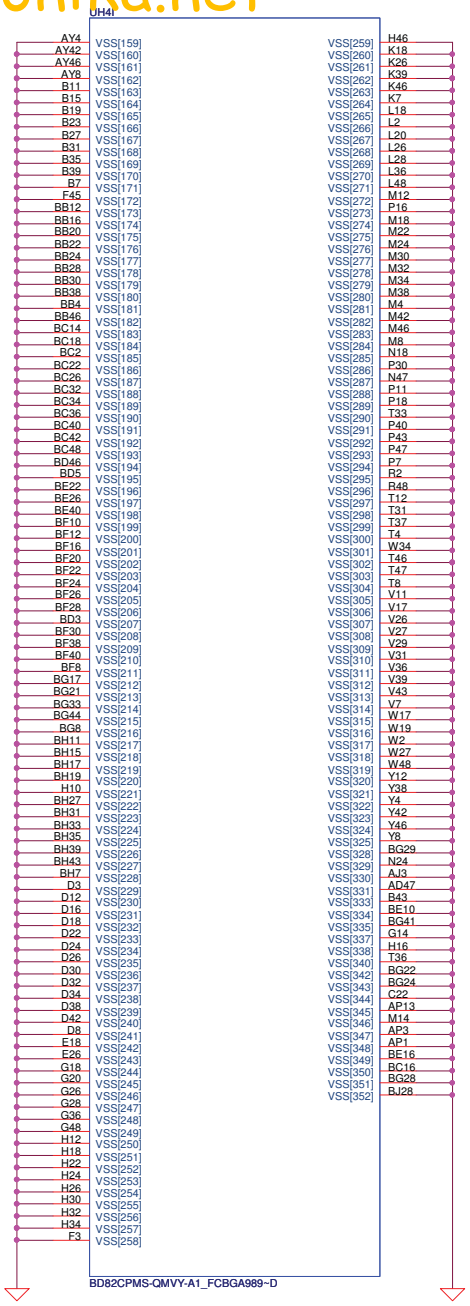

PROPRIETARY NOTE: THIS SHEET OF ENGINEERING DRAWING AND SPECIFICATIONS CONTAINS CONFIDENTIAL TRADE SECRET AND OTHER PROPRIETARY INFORMATION OF DELL INC. ("DELL") THIS DOCUMENT MAY NOT BE TRANSFERRED OR COPIED WITHOUT THE EXPRESS WRITTEN AUTHORIZATION OF DELL. IN ADDITION, NEITHER THIS SHEET NOR THE INFORMATION IT CONTAINS WAY BE USED BY OR DISCLOSED TO ANY THIRD PARTY WITHOUT DELL'S EXPRESS WRITTEN CONSENT.

DELL CONFIDENTIAL/PROPRIETARY

Compal Electronics, Inc.

Title	PCH (8/8)	
Size	Document Number: LA-6611P	Rev 0.3
Date: Wednesday, January 26, 2011	Sheet 21 of 64	

http://hobi-elektronika.net

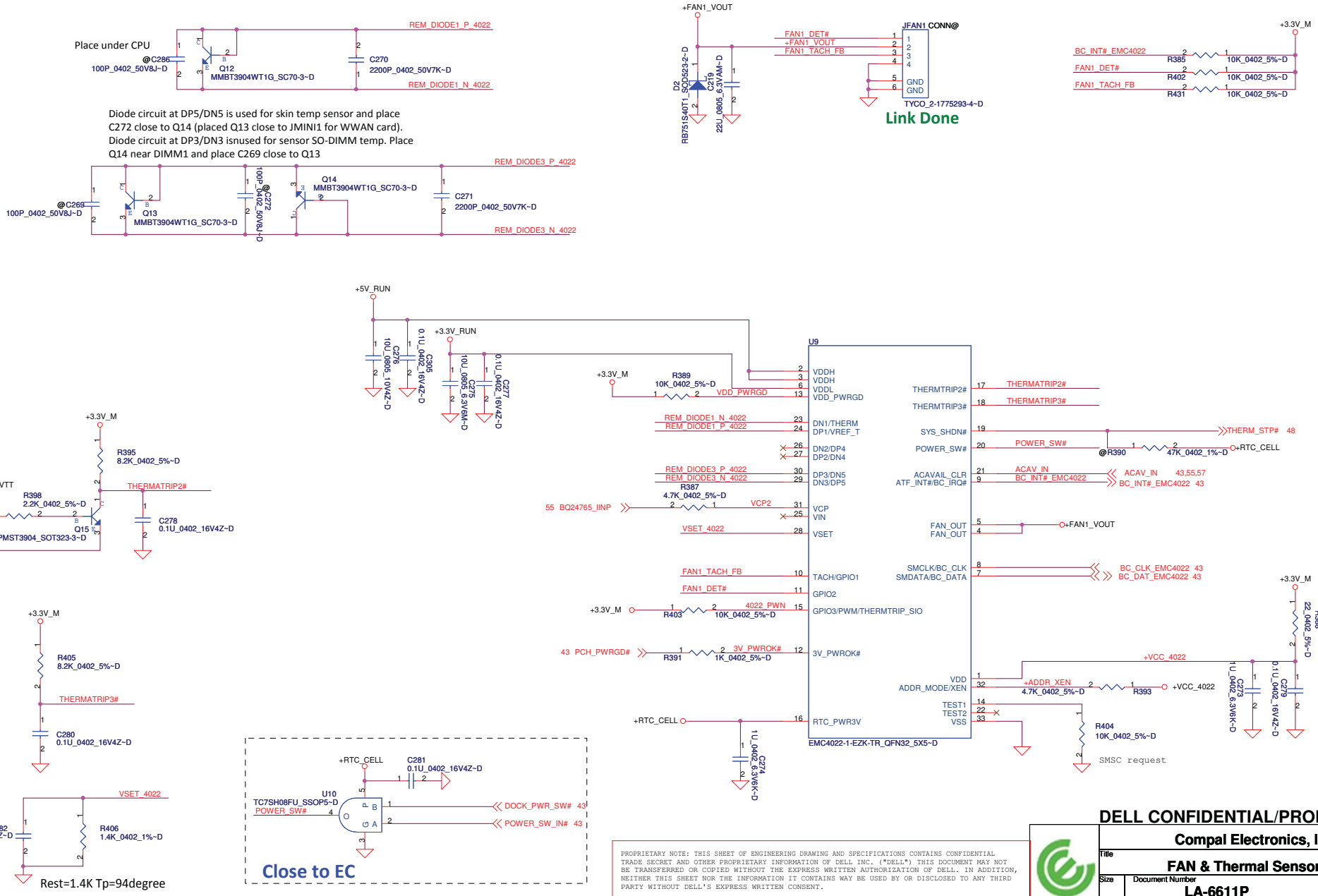

PROPRIETARY NOTE: THIS SHEET OF ENGINEERING DRAWING AND SPECIFICATIONS CONTAINS CONFIDENTIAL TRADE SECRET AND OTHER PROPRIETARY INFORMATION OF DELL INC. ("DELL") THIS DOCUMENT MAY NOT BE TRANSFERRED OR COPIED WITHOUT THE EXPRESS WRITTEN AUTHORIZATION OF DELL. IN ADDITION, NEITHER THIS SHEET NOR THE INFORMATION IT CONTAINS WAY BE USED BY OR DISCLOSED TO ANY THIRD PARTY WITHOUT DELL'S EXPRESS WRITTEN CONSENT.

DELL CONFIDENTIAL/PROPRIETARY

Compal Electronics, Inc.	
Title	FAN & Thermal Sensor
Size / Document Number	LA-6611P
Rev	0.3
Date: Wednesday, January 26, 2011	Sheet 22 of 64

http://hobi-elektronika.net

Fingerprint CONN.

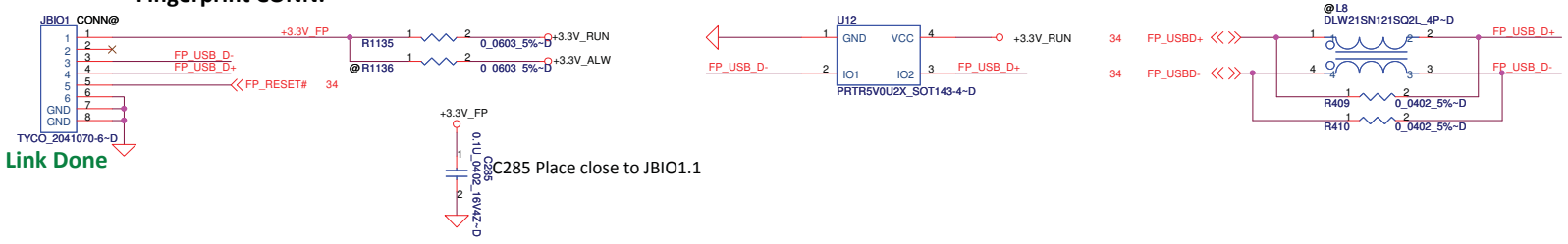

Link Done

C285 Place close to JBIO1.1

PROPRIETARY NOTE: THIS SHEET OF ENGINEERING DRAWING AND SPECIFICATIONS CONTAINS CONFIDENTIAL TRADE SECRET AND OTHER PROPRIETARY INFORMATION OF DELL INC. ("DELL") THIS DOCUMENT MAY NOT BE TRANSFERRED OR COPIED WITHOUT THE EXPRESS WRITTEN AUTHORIZATION OF DELL. IN ADDITION, NEITHER THIS SHEET NOR THE INFORMATION IT CONTAINS WAY BE USED BY OR DISCLOSED TO ANY THIRD PARTY WITHOUT DELL'S EXPRESS WRITTEN CONSENT.

DELL CONFIDENTIAL/PROPRIETARY

Compal Electronics, Inc.		
Title: FP Conn.		
Size	Document Number: LA-6611P	Rev 0.3
Date: Wednesday, January 26, 2011	Sheet 23 of 64	

http://hobi-elektronika.net

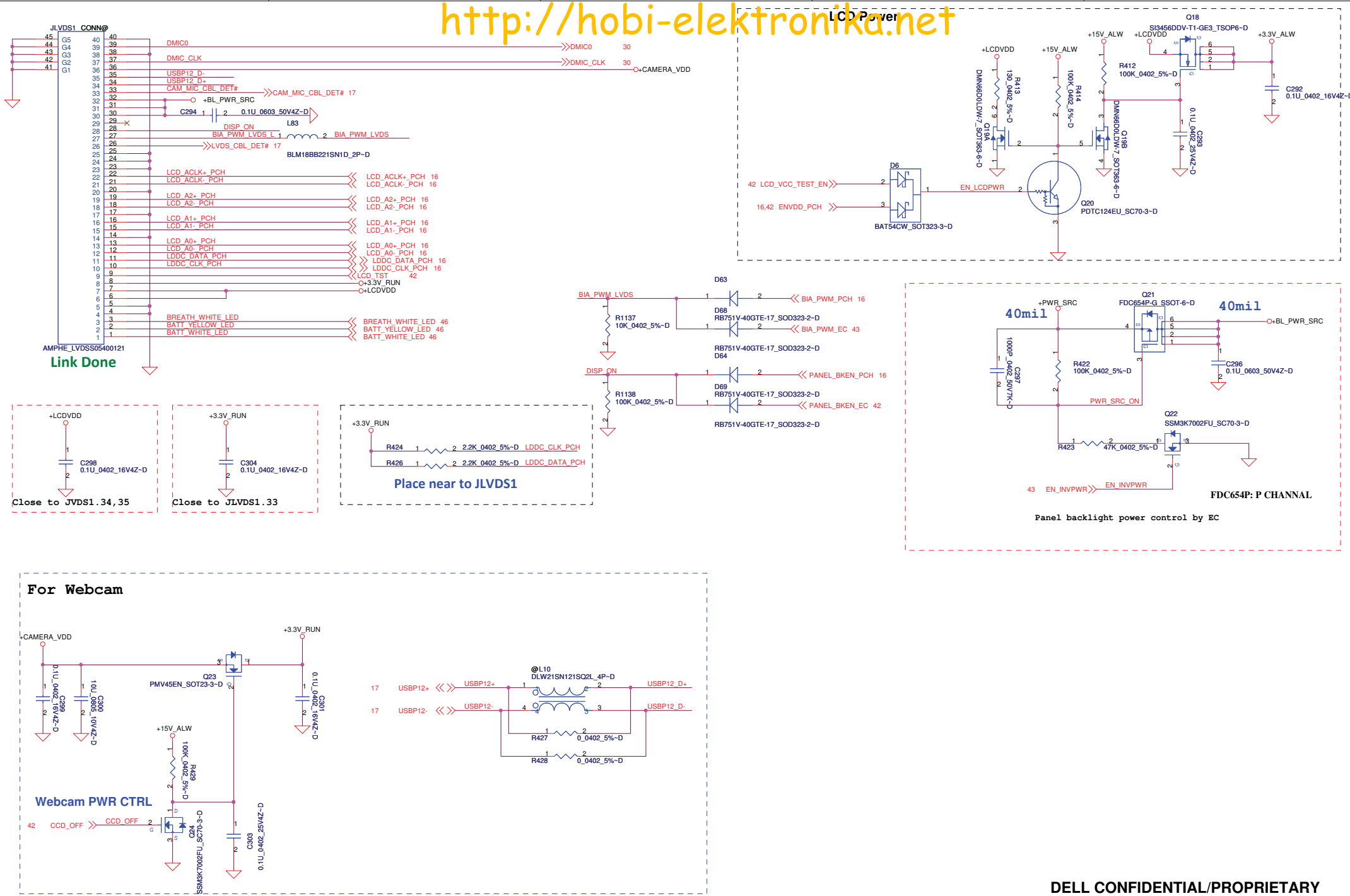

DELL CONFIDENTIAL/PROPRIETARY

PROPRIETARY NOTE: THIS SHEET OF ENGINEERING DRAWING AND SPECIFICATIONS CONTAINS CONFIDENTIAL TRADE SECRET AND OTHER PROPRIETARY INFORMATION OF DELL INC. ("DELL") THIS DOCUMENT MAY NOT BE TRANSFERRED OR COPIED WITHOUT THE EXPRESS WRITTEN AUTHORIZATION OF DELL. IN ADDITION, NEITHER THIS SHEET NOR THE INFORMATION IT CONTAINS WAY BE USED BY OR DISCLOSED TO ANY THIRD PARTY WITHOUT DELL'S EXPRESS WRITTEN CONSENT.

Compal Electronics, Inc.	
Title	LVDS & CAM Conn
Size / Document Number	LA-6611P
Rev	0.3
Date: Wednesday, January 26, 2011	Sheet 24 of 64

http://hobi-elektronika.net

VGA SW for MB/DOCK

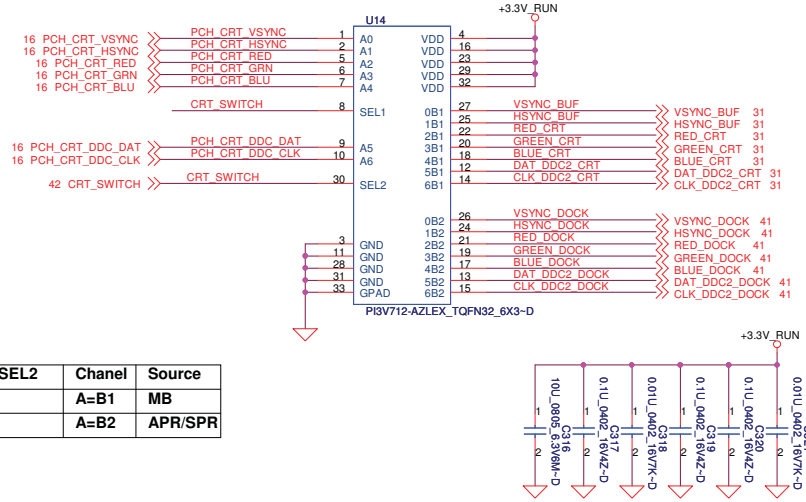

SEL1/SEL2	Chanel	Source
0	A=B1	MB
1	A=B2	APR/SPR

DELL CONFIDENTIAL/PROPRIETARY

Compal Electronics, Inc.

Title: CRT switch

Size | Document Number: LA-6611P | Rev: 0.3

Date: Wednesday, January 26, 2011 | Sheet 25 of 64

http://hobi-elektronika.net

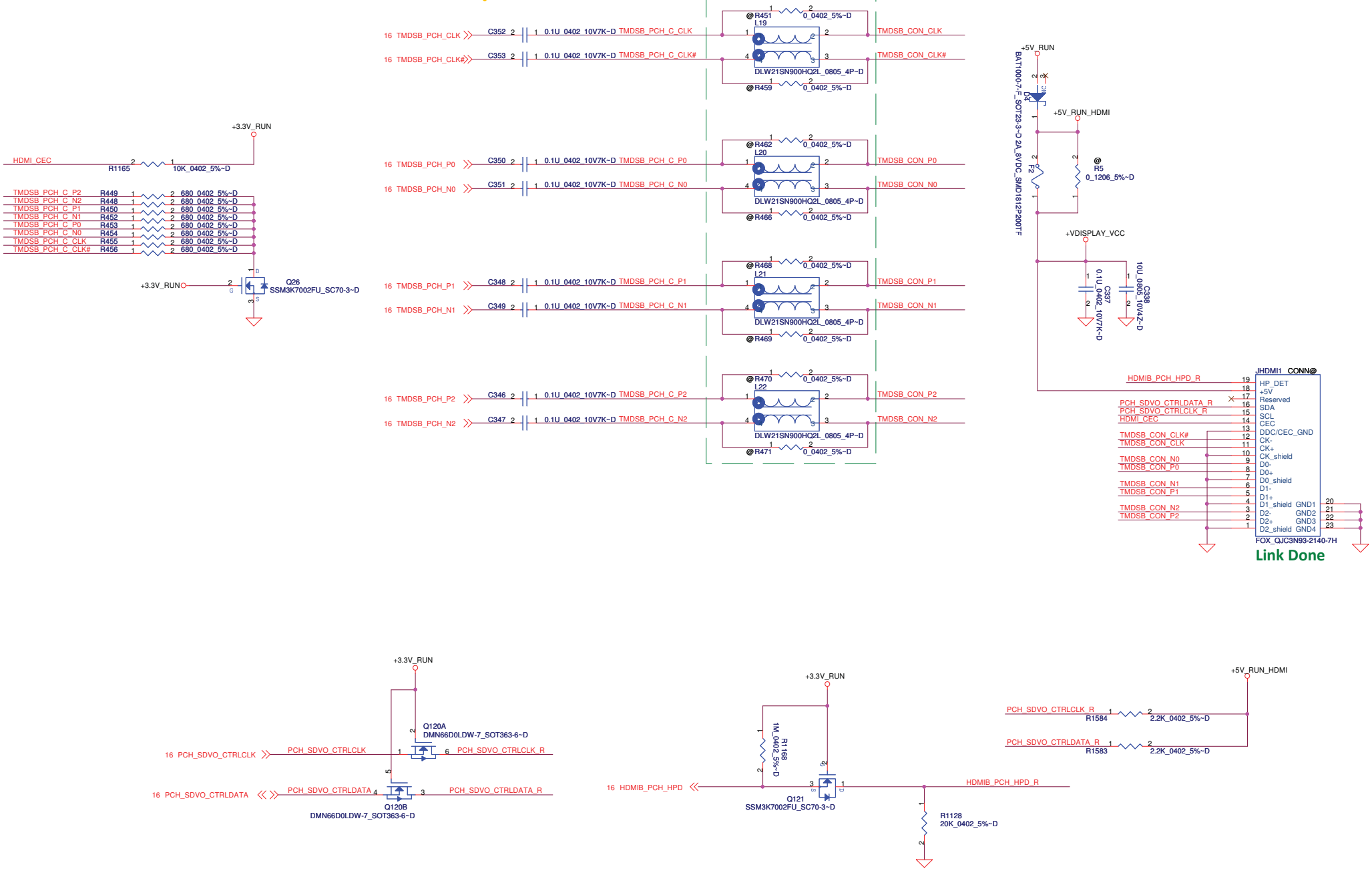

PROPRIETARY NOTE: THIS SHEET OF ENGINEERING DRAWING AND SPECIFICATIONS CONTAINS CONFIDENTIAL TRADE SECRET AND OTHER PROPRIETARY INFORMATION OF DELL INC. ("DELL") THIS DOCUMENT MAY NOT BE TRANSFERRED OR COPIED WITHOUT THE EXPRESS WRITTEN AUTHORIZATION OF DELL. IN ADDITION, NEITHER THIS SHEET NOR THE INFORMATION IT CONTAINS WAY BE USED BY OR DISCLOSED TO ANY THIRD PARTY WITHOUT DELL'S EXPRESS WRITTEN CONSENT.

DELL CONFIDENTIAL/PROPRIETARY

Compal Electronics, Inc.			
Title: HDMI port			
Size	Document Number: LA-6611P		Rev 0.3
Date: Wednesday, January 26, 2011	Sheet 26 of 64		

http://hobi-elektronika.net

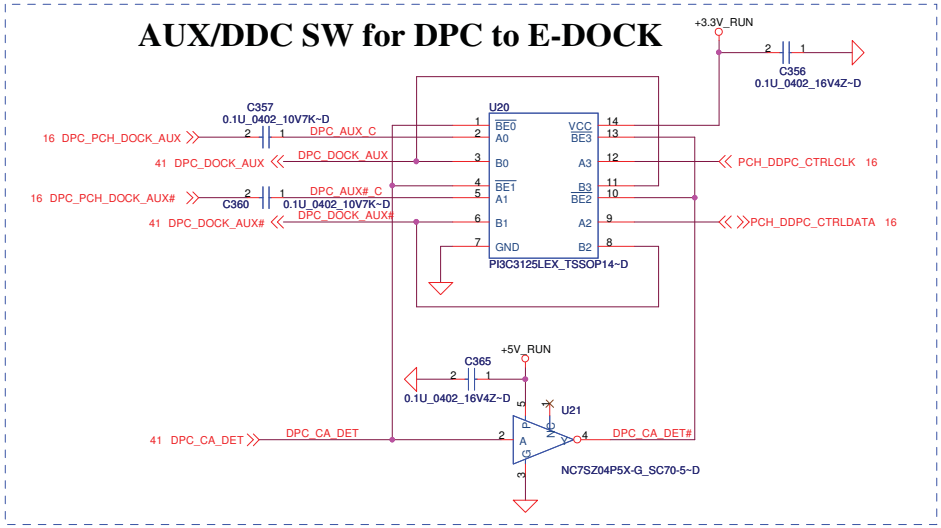

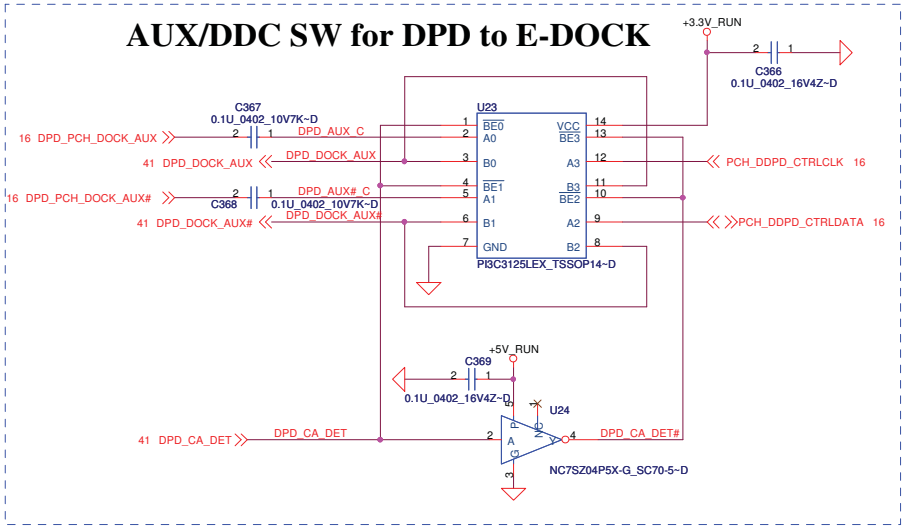

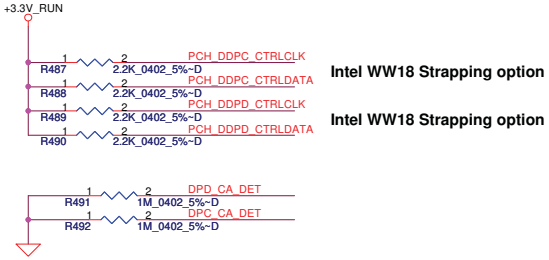

Intel WW18 Strapping option

Intel WW18 Strapping option

DELL CONFIDENTIAL/PROPRIETARY

PROPRIETARY NOTE: THIS SHEET OF ENGINEERING DRAWING AND SPECIFICATIONS CONTAINS CONFIDENTIAL TRADE SECRET AND OTHER PROPRIETARY INFORMATION OF DELL INC. ("DELL") THIS DOCUMENT MAY NOT BE TRANSFERRED OR COPIED WITHOUT THE EXPRESS WRITTEN AUTHORIZATION OF DELL. IN ADDITION, NEITHER THIS SHEET NOR THE INFORMATION IT CONTAINS WAY BE USED BY OR DISCLOSED TO ANY THIRD PARTY WITHOUT DELL'S EXPRESS WRITTEN CONSENT.

Compal Electronics, Inc.		
Title: DP SW		
Size	Document Number: LA-6611P	Rev: 0.3
Date: Wednesday, January 26, 2011	Sheet 27 of 64	

http://hobi-elektronika.net

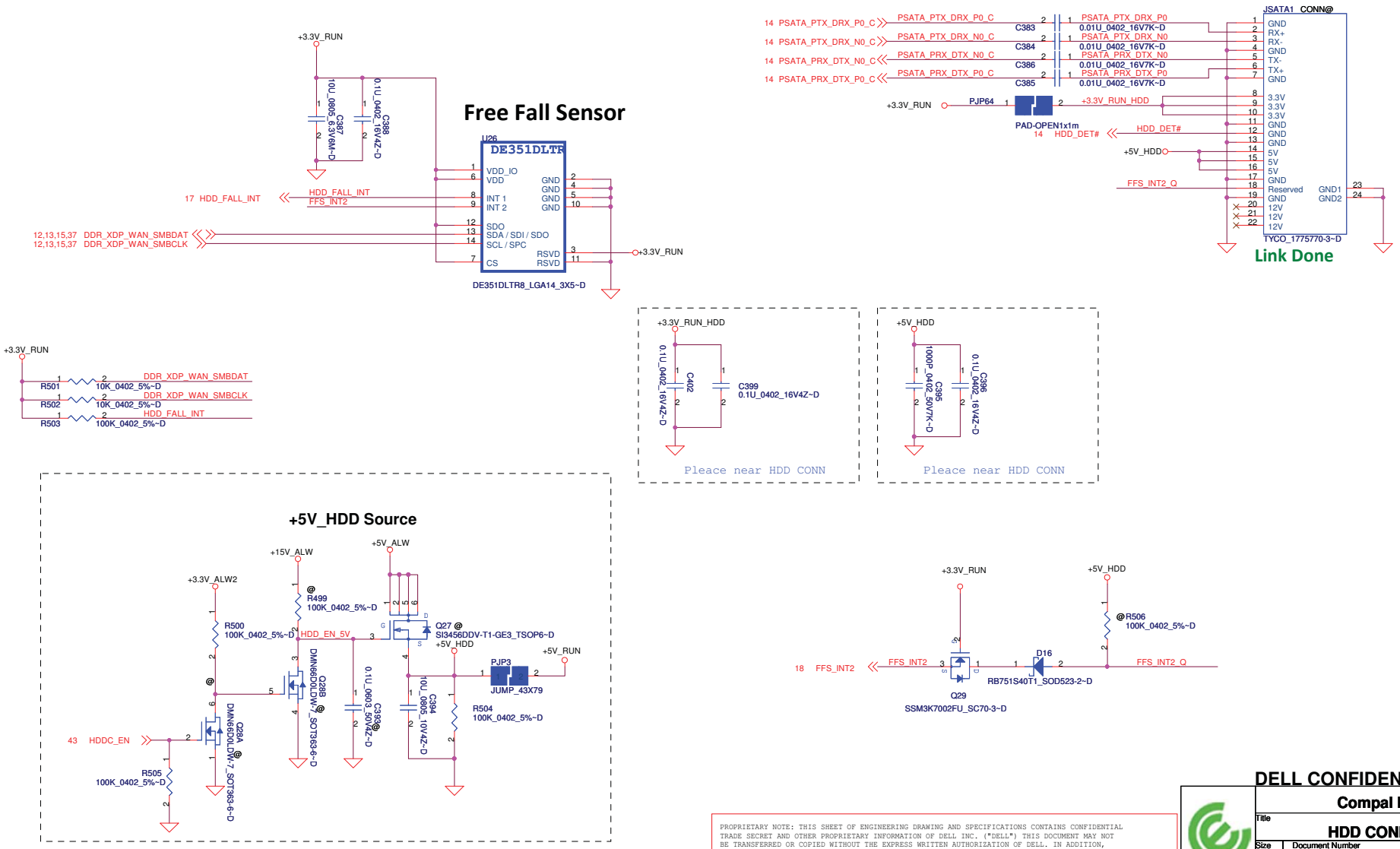

PROPRIETARY NOTE: THIS SHEET OF ENGINEERING DRAWING AND SPECIFICATIONS CONTAINS CONFIDENTIAL TRADE SECRET AND OTHER PROPRIETARY INFORMATION OF DELL INC. ("DELL") THIS DOCUMENT MAY NOT BE TRANSFERRED OR COPIED WITHOUT THE EXPRESS WRITTEN AUTHORIZATION OF DELL. IN ADDITION, NEITHER THIS SHEET NOR THE INFORMATION IT CONTAINS WAY BE USED BY OR DISCLOSED TO ANY THIRD PARTY WITHOUT DELL'S EXPRESS WRITTEN CONSENT.

DELL CONFIDENTIAL/PROPRIETARY

Compal Electronics, Inc.

Title: HDD CONNECTOR

Size | Document Number: LA-6611P | Rev: 0.3

Date: Wednesday, January 26, 2011 | Sheet 28 of 64

http://hobi-elektronika.net

For ODD

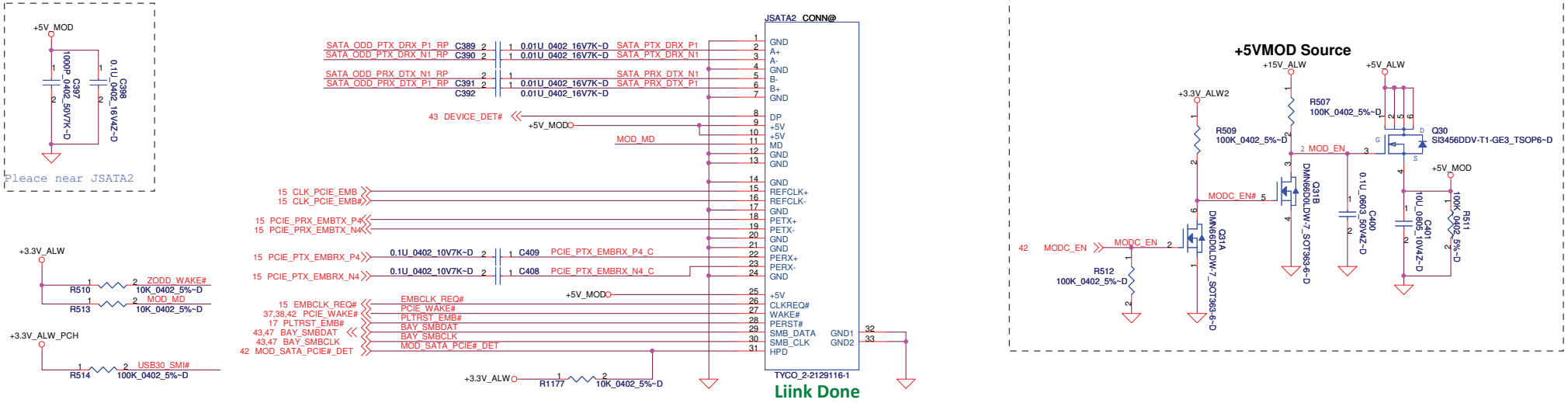

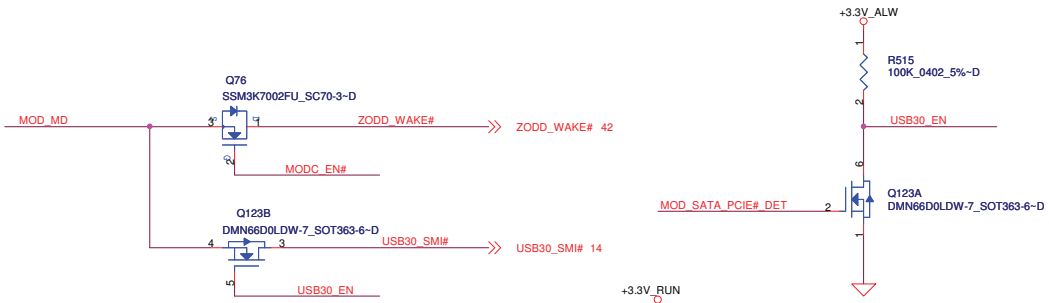

SATA Repeater for ODD

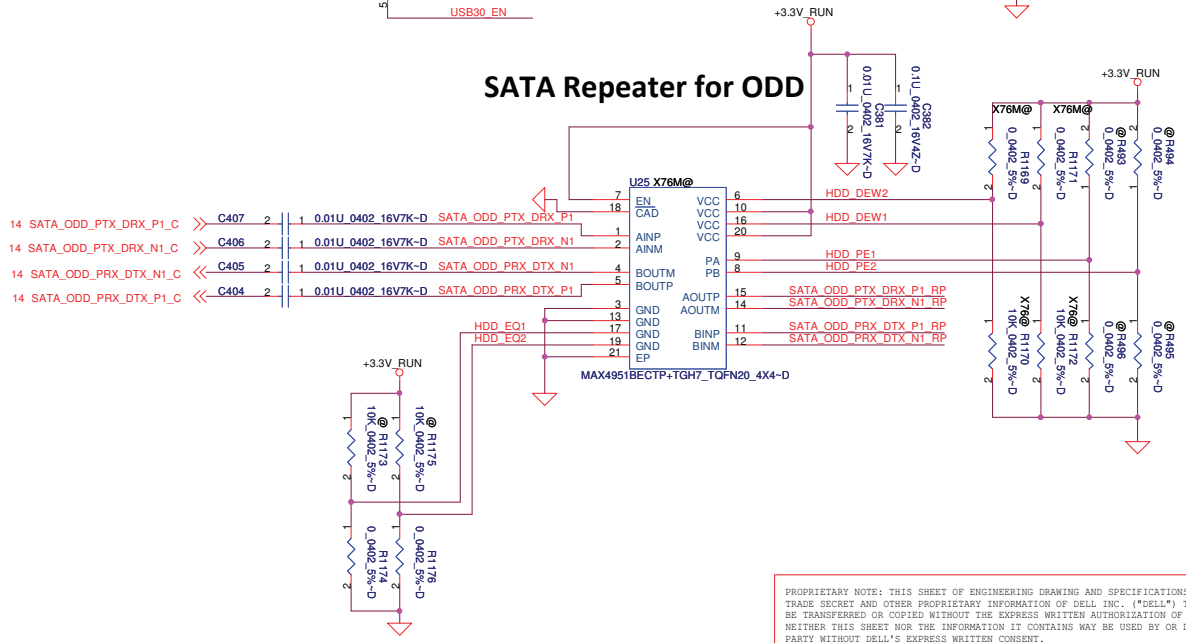

SA00003LH1L SA00003ZX0L

	MAXIM	TI
R1169 R1171	pop	depop
R1170 R1172	depop	pop

PROPRIETARY NOTE: THIS SHEET OF ENGINEERING DRAWING AND SPECIFICATIONS CONTAINS CONFIDENTIAL TRADE SECRET AND OTHER PROPRIETARY INFORMATION OF DELL INC. ("DELL") THIS DOCUMENT MAY NOT BE TRANSFERRED OR COPIED WITHOUT THE EXPRESS WRITTEN AUTHORIZATION OF DELL. IN ADDITION, NEITHER THIS SHEET NOR THE INFORMATION IT CONTAINS WAY BE USED BY OR DISCLOSED TO ANY THIRD PARTY WITHOUT DELL'S EXPRESS WRITTEN CONSENT.

DELL CONFIDENTIAL/PROPRIETARY

Compal Electronics, Inc.

Title: ODD CONNECTOR

Size | Document Number: LA-6611P | Rev: 0.3

Date: Wednesday, January 26, 2011 | Sheet 29 of 64

http://hobi-elektronika.net

Internal Speakers Header

20 mils trace

INT_SPK_L+ — L78 BLM18BD121SN1D_2P~D — INT_SPKL_L+
INT_SPK_L- — L79 BLM18BD121SN1D_2P~D — INT_SPKL_L-
INT_SPK_R+ — L80 BLM18BD121SN1D_2P~D — INT_SPKR_R+
INT_SPK_R- — L81 BLM18BD121SN1D_2P~D — INT_SPKR_R-

C973 680P_0402_50V7K~D, C974 680P_0402_50V7K~D, C975 680P_0402_50V7K~D, C976 680P_0402_50V7K~D

Link Done

Speaker Connector

JSPK1 Conn@ — TYCO_2-1775765-4

DVDD_IO should match with HDA Bus level

Notes
Keep AVDD supply and speaker traces routed on the DGND plane.
Keep away from AGND and other analog signals

+3.3V_RUN

C951 0.1U_0402_16V4Z~D, C952 1U_0603_10V6K~D, C953 0.1U_0402_16V4Z~D, C954 10U_0805_10V6K~D

Place C951~C961 close to Codec

U72 — 92HD90B2X5NLGXZAX8_QFN48_7X7~D

Pin	Signal
DVDD_CORE	
DVDD_IO	
DVDD	
BITCLK	PCH_AZ_CODEC_BITCLK
SDATA_OUT	PCH_AZ_CODEC_SDOUT
SYNC	PCH_AZ_CODEC_SYNC
SDATA_IN	PCH_AZ_CODEC_SDIN0
RESET#	PCH_AZ_CODEC_RST#
I2S_MCLK	I2S_12MHZ
I2S_SCLK	I2S_BCLK
I2S_DOUT	I2S_DO_R
I2S_LRCLK	I2S_LRCLK
I2S_DIN	I2S_DI#
No Connect	
No Connect	
EAPD	AUD_NB_MUTE#
DVSS	
PVSS	
GND	
AVDD1, AVDD2	+VDDA_AVDD
PVDD, PVDD	+VDDA_PVDD
SENSE_A	AUD_SENSE_A
SENSE_B	AUD_SENSE_B
PORTA_L	MIC_IN_L
PORTA_R	MIC_IN_R
VrefOut_A	+VREFOUT
PORTB_L	AUD_HP_OUT_L
PORTB_R	AUD_HP_OUT_R
PORTD_+L	INT_SPK_L+
PORTD_-L	INT_SPK_L-
PORTD_+R	INT_SPK_R+
PORTD_-R	INT_SPK_R-
MONO_OUT	
PC_BEEP	AUD_PC_BEEP
DMIC_CLK/GPIO 1	DMIC_CLK_R
DMIC_0/GPIO 2	
DMIC1/GPIO0/SPDIFOUT1	
SPDIFOUT0//GPIO3/Aux_Out	
CAP+	
CAP-	
VREFFILT	
CAP2	
V-Vreg	
AVSS1, AVSS, AVSS	

Place R1096 close to codec: R1096 33_0402_5%~D
Place R1097 close to codec: R1097 33_0402_5%~D
R1099 10K_0402_5%~D (+3.3V_RUN)

C962 4.7U_0603_10V6K~D — Place C962 close to Codec

Place C963~C966 close to Codec

C963 4.7U_0603_10V6K~D, C964 4.7U_0603_10V6K~D, C965 1U_0603_10V6K~D, C966 10U_0805_10V6K~D

+5V_RUN — R1095 0_0805_5%~D

L77 BLM21PG600SN1D_0805~D

C955 10U_0805_10V6K~D, C956 1U_0603_10V6K~D, C957 0.1U_0402_16V4Z~D, C1172 1U_0603_10V6K~D, C1173 0.1U_0402_16V4Z~D, C958 10U_0805_10V6K~D, C959 0.1U_0402_16V4Z~D, C960 10U_0805_10V6K~D, C961 0.1U_0402_16V4Z~D

C1155 1U_0402_6.3V6K~D

R1143 2.2K_0402_5%~D

C1113 0.1U_0402_16V4Z~D, C1114 0.1U_0402_16V4Z~D

L82 BLM18BB221SN1D_2P~D

R1119 100K_0402_5%~D (SPKR_R → SPKR)
R1120 100K_0402_5%~D (BEEP_R → BEEP)
@R1141 10K_0402_5%~D
@R1142 10K_0402_5%~D

+VREFOUT — C1180 1U_0603_10V6K~D

Close to U72 pin5

PCH_AZ_CODEC_SDOUT — @R1077 47_0402_5%~D — @C978 0.1U_0402_10V7K~D

Close to U72 pin6

PCH_AZ_CODEC_BITCLK — @R1076 10_0402_5%~D — @C977 10P_0402_50V8J~D

Place closely to Pin 13.

AUD_SENSE_A — R1083 2.49K_0402_1%~D (+VDDA_AVDD)
R1086 20K_0402_1%~D — C980 1000P_0402_50V7K~D — R1087 100K_0402_5%~D (+3.3V_RUN)
Q107B DMN66D0LDW-7_SOT363-6~D — AUD_HP_NB_SENSE → AUD_HP_NB_SENSE 31,42

Add for solve pop noise and detect issue

Place closely to Pin 14

AUD_SENSE_B — R1078 2.49K_0402_1%~D (+VDDA_AVDD)
R1079 39.2K_0402_1%~D — R1081 100K_0402_5%~D (+3.3V_RUN) — 42 DOCK_HP_DET — Q106A DMN66D0LDW-7_SOT363-6~D
R1080 20K_0402_1%~D — C979 1000P_0402_50V7K~D — R1082 100K_0402_5%~D (+3.3V_RUN) — Q106B DMN66D0LDW-7_SOT363-6~D — DOCK_MIC_DET 42

Port	Function
A	External MIC
B	HearPhone Out
C	Dock Audio
D	Internal SPK

Tie Analog Ground to Digital ground under codec by a single point

PJP62 — PAD-OPEN1x1m

place at GNDA and DGND plane

C267 0.1U_0402_16V4Z~D, C283 0.1U_0402_16V4Z~D, C284 0.1U_0402_16V4Z~D

MCLK[2:0]	Frequency (MHz)	PLL clock divisor	suggested sample rate	Notes
000	24	NA	96KHz	HD Audio BitClk
001	12	NA	48KHz	HD Audio BitClk/2
010	22.5792	5	88.2KHz	
011	11.2896	10	44.1KHz	

Resistor	SENSE_A	SENSE_B
39.2K	PORT A (HP0)	PORT E
20K	PORT B (HP1)	PORT F
10K	NA	DMIC0
5.11K	SPDIFOUT0	SPDIFOUT1 (DMIC1)
2.49K	Pull-up to AVDD	

U73 — CD74HC366M96_SO16~D

C1103 0.1U_0402_10V7K~D (+3.3V_RUN)

Pin	Signal
VCC	
1A	I2S_BCLK
2A	I2S_LRCLK
3A	I2S_DO
4A	I2S_12MHZ
5A	
6A	I2S_DI#
OE1#	
OE2#	42 EN_I2S_NB_CODEC#
1Y#	DAI_BCLK# 41
2Y#	DAI_LRCK# 41
3Y#	DAI_DO# 41
4Y#	DAI_12MHZ# 41
5Y#	
6Y#	DAI_DI 41
GND	

R1110 1K_0402_5%~D

@D54, @D55, @D56, @D57 DA204U_SOT323-3~D (+3.3V_RUN)
@D58 DA204U_SOT323-3~D (+3.3V_RUN)

DELL CONFIDENTIAL/PROPRIETARY

PROPRIETARY NOTE: THIS SHEET OF ENGINEERING DRAWING AND SPECIFICATIONS CONTAINS CONFIDENTIAL TRADE SECRET AND OTHER PROPRIETARY INFORMATION OF DELL INC. ("DELL") THIS DOCUMENT MAY NOT BE TRANSFERRED OR COPIED WITHOUT THE EXPRESS WRITTEN AUTHORIZATION OF DELL. IN ADDITION, NEITHER THIS SHEET NOR THE INFORMATION IT CONTAINS WAY BE USED BY OR DISCLOSED TO ANY THIRD PARTY WITHOUT DELL'S EXPRESS WRITTEN CONSENT.

Compal Electronics, Inc.
Title: Azalia (HD) Codec
Size: | Document Number: LA-6611P | Rev: 0.3
Date: Wednesday, January 26, 2011 | Sheet 30 of 64

http://hobi-elektronika.net

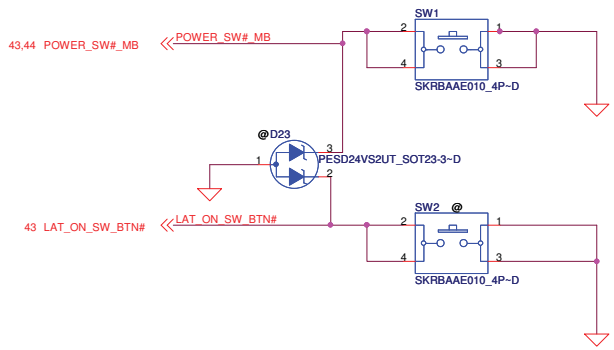

POWER & INSTANT ON SWITCH

I/O board CONN.

LS-6611P

Link Done

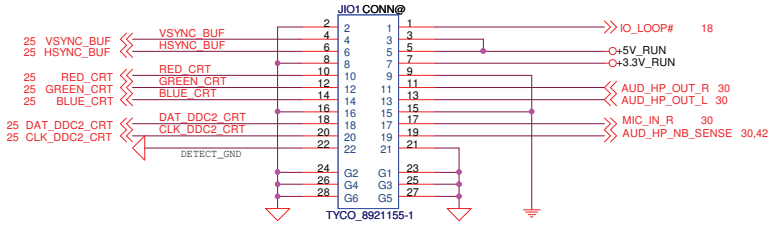

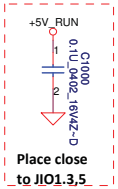

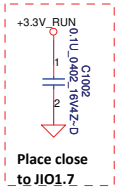

Defult on,
WIRELESS_ON/OFF#:
LOW: ON
HIGH: OFF

Media Board

LS-6613P

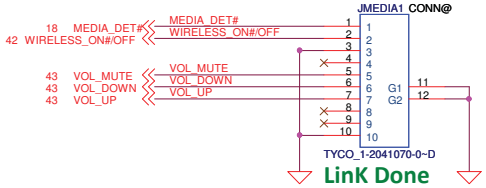

LinK Done

LED Board with Lid

LS-6612P

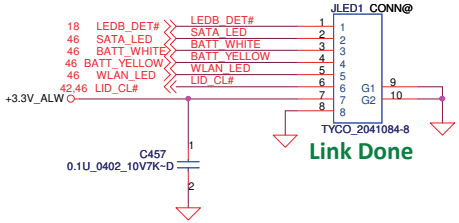

Link Done

PROPRIETARY NOTE: THIS SHEET OF ENGINEERING DRAWING AND SPECIFICATIONS CONTAINS CONFIDENTIAL TRADE SECRET AND OTHER PROPRIETARY INFORMATION OF DELL INC. ("DELL") THIS DOCUMENT MAY NOT BE TRANSFERRED OR COPIED WITHOUT THE EXPRESS WRITTEN AUTHORIZATION OF DELL. IN ADDITION, NEITHER THIS SHEET NOR THE INFORMATION IT CONTAINS WAY BE USED BY OR DISCLOSED TO ANY THIRD PARTY WITHOUT DELL'S EXPRESS WRITTEN CONSENT.

DELL CONFIDENTIAL/PROPRIETARY

Compal Electronics, Inc.

Title	IO/Sniffer/LID	
Size	Document Number: LA-6611P	Rev 0.3
Date: Wednesday, January 26, 2011	Sheet 31 of 64	

http://hobi-elektronika.net

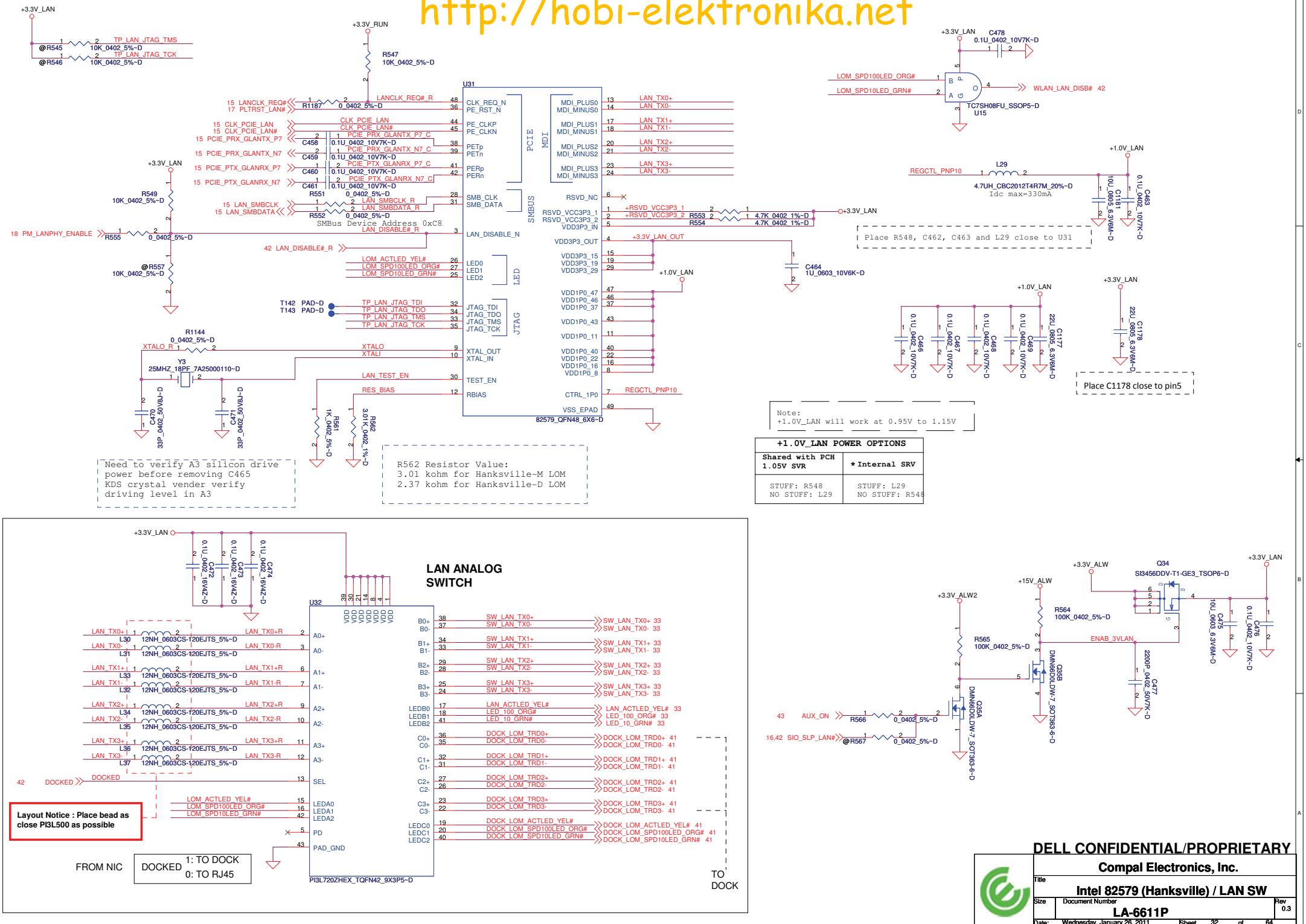

DELL CONFIDENTIAL/PROPRIETARY

Compal Electronics, Inc.

Title: Intel 82579 (Hanksville) / LAN SW

Size | Document Number: LA-6611P | Rev 0.3

Date: Wednesday, January 26, 2011 | Sheet 32 of 64

http://hobi-elektronika.net

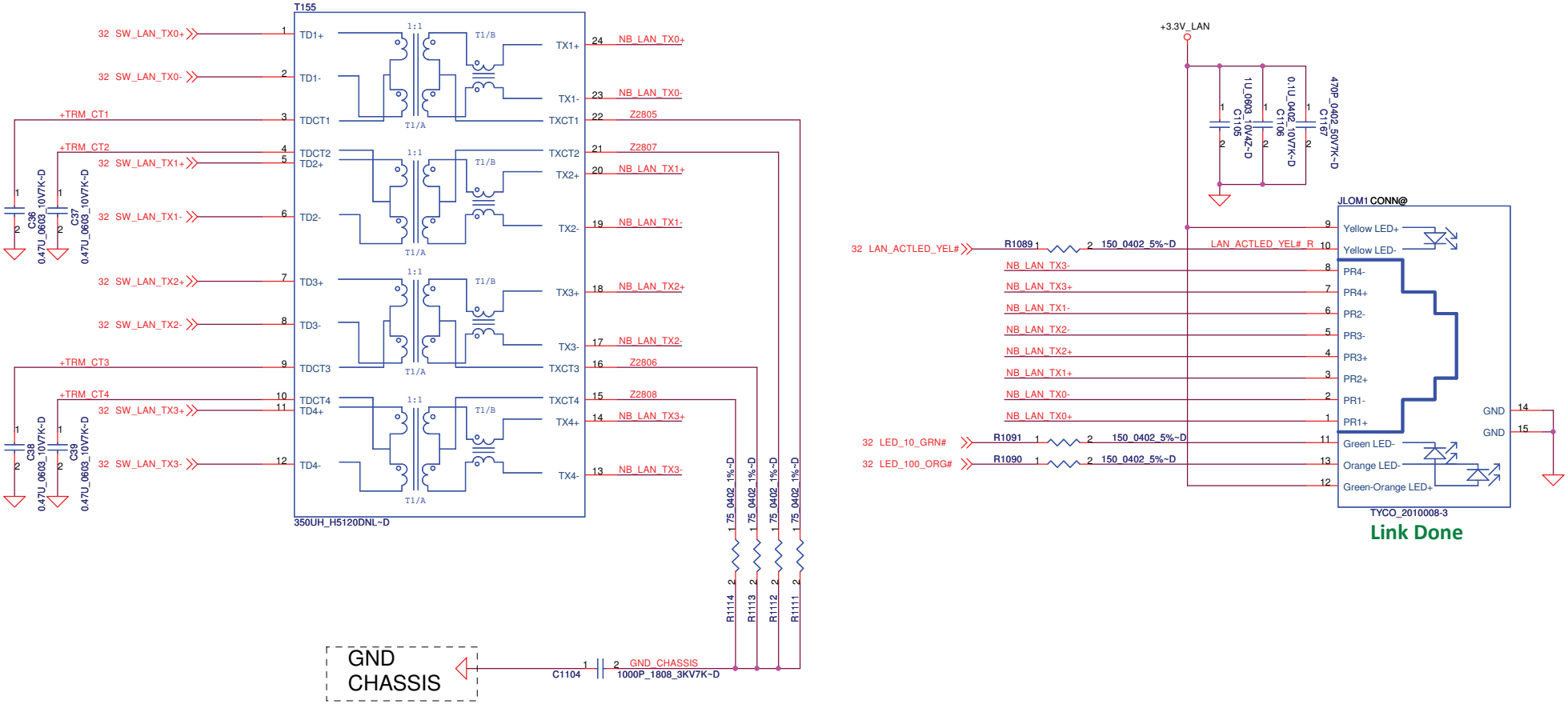

Link Done

DELL CONFIDENTIAL/PROPRIETARY

Compal Electronics, Inc.

Title: RJ45

Size | Document Number: LA-6611P | Rev: 0.3

Date: Wednesday, January 26, 2011 | Sheet 33 of 64

THIS SHEET OF ENGINEERING DRAWING IS THE PROPRIETARY PROPERTY OF COMPAL ELECTRONICS, INC. AND CONTAINS CONFIDENTIAL AND TRADE SECRET INFORMATION. THIS SHEET MAY NOT BE TRANSFERED FROM THE CUSTODY OF THE COMPETENT DIVISION OF R&D DEPARTMENT EXCEPT AS AUTHORIZED BY COMPAL ELECTRONICS, INC. NEITHER THIS SHEET NOR THE INFORMATION IT CONTAINS MAY BE USED BY OR DISCLOSED TO ANY THIRD PARTY WITHOUT PRIOR WRITTEN CONSENT OF COMPAL ELECTRONICS, INC.

http://hobi-elektronika.net

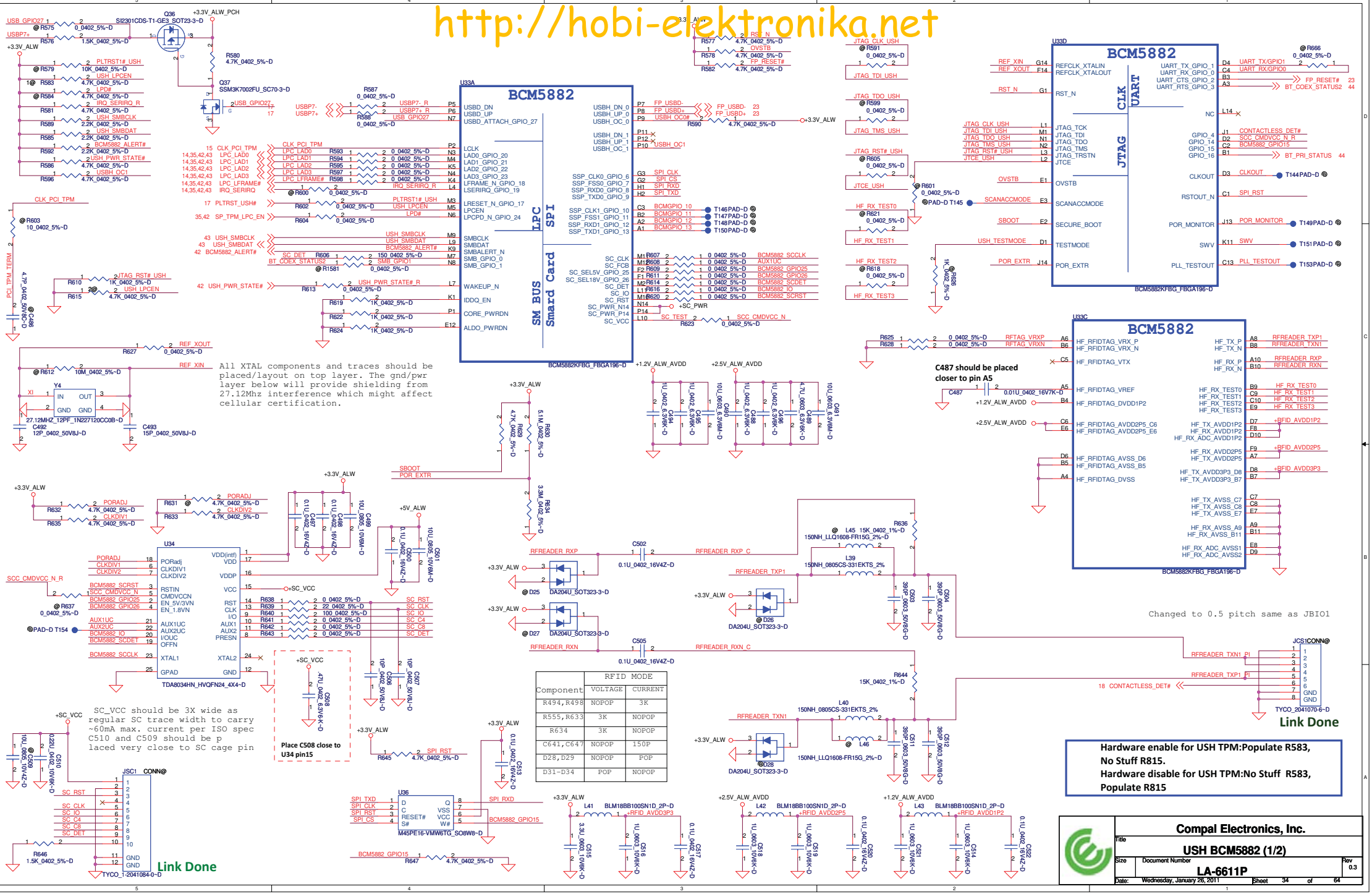

Component	RFID MODE	
	VOLTAGE	CURRENT
R494,R498	NOPOP	3K
R555,R633	3K	NOPOP
R634	3K	NOPOP
C641,C647	NOPOP	150P
D28,D29	NOPOP	POP
D31-D34	POP	NOPOP

http://hobi-elektronika.net

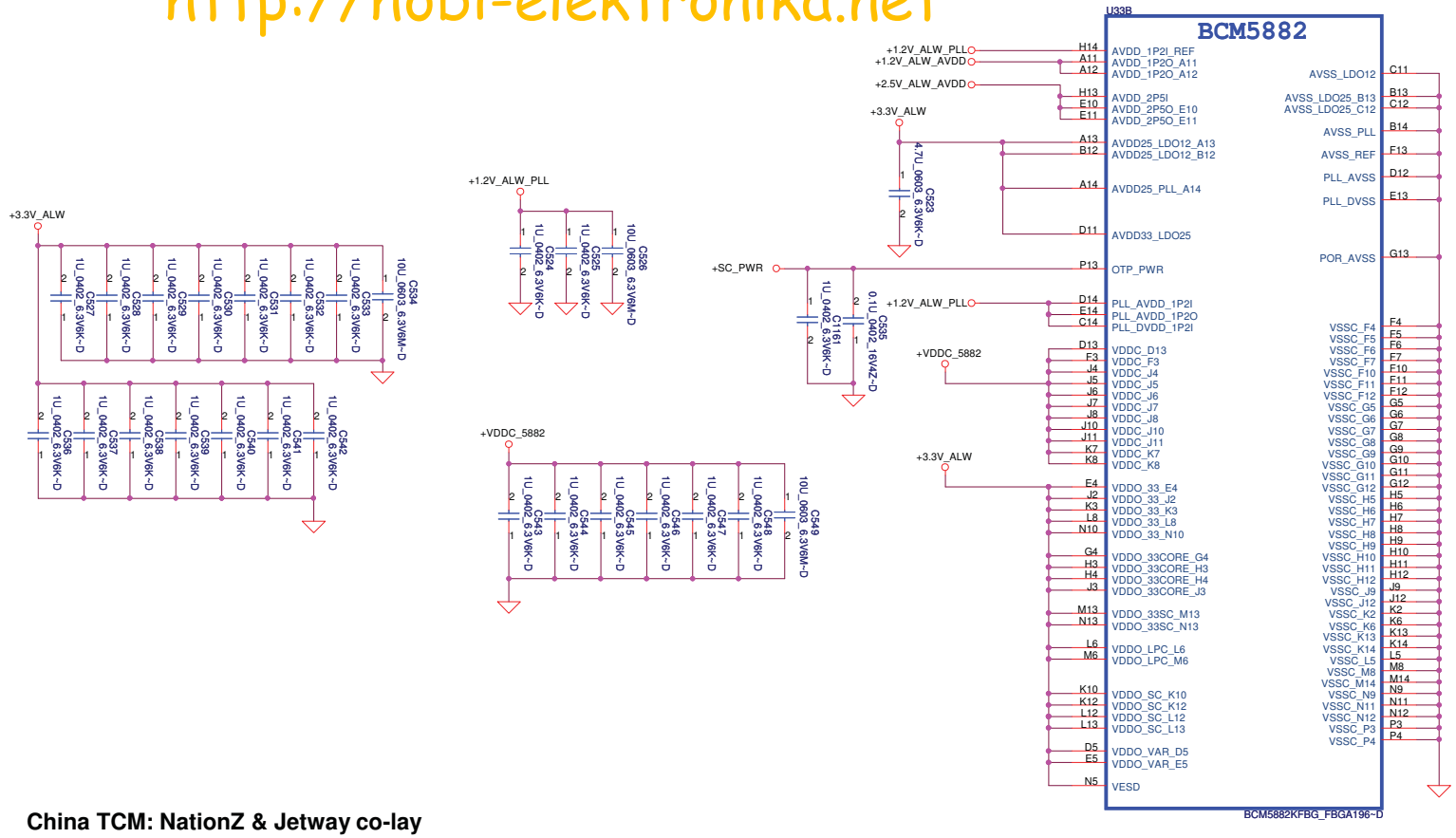

LOW:Power Down Mode
High:Working Mode

China TCM: NationZ & Jetway co-lay

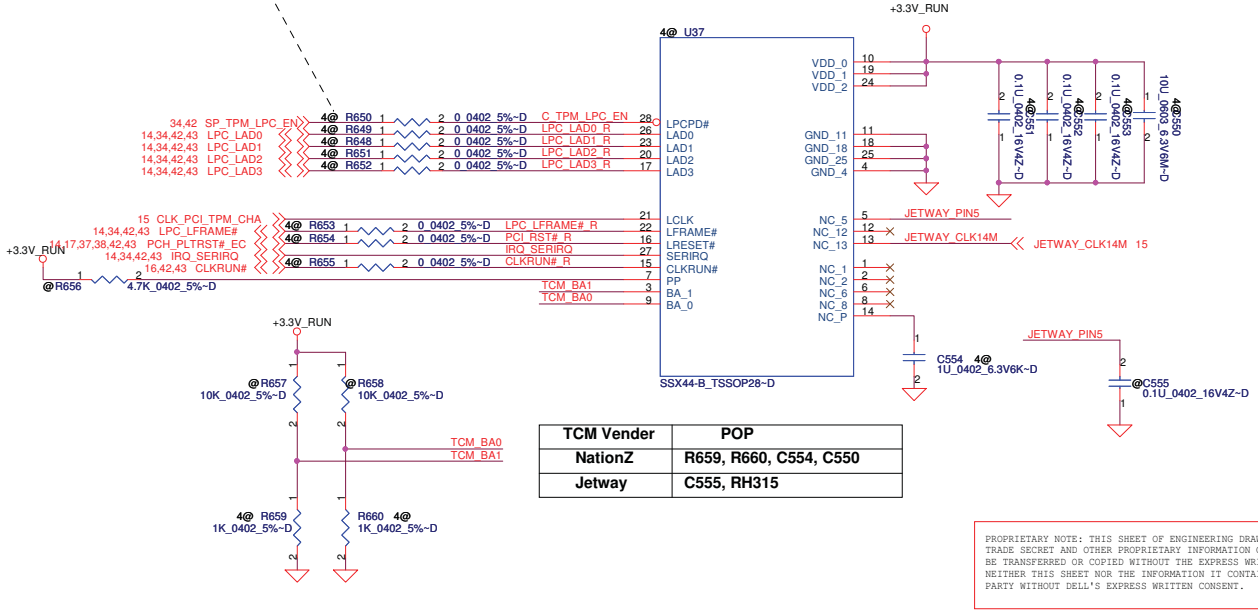

TCM Vender	POP
NationZ	R659, R660, C554, C550
Jetway	C555, RH315

USH BCM5882 and China TCM Z8H172T Option

PART/PIN	Ref Des	TCM Enable	TPM Enable	ALL TPM/TCM Disable
TCM circuit	All 4@	POP	@	@
USH_LPCEN	PU R583	@	POP	@
	PD R615	POP	@	@
SIO 5028 ->SP_TPM_LPC_EN	PU R772	@	@	@
PCH GPIO39 ->TPM_ID1	PU RH268	@	@	POP
	PD RH271	POP	POP	@
PCH GPIO38 ->TPM_ID0	PU RH267	POP	POP	@
	PD RH270	@	@	POP

PROPRIETARY NOTE: THIS SHEET OF ENGINEERING DRAWING AND SPECIFICATIONS CONTAINS CONFIDENTIAL TRADE SECRET AND OTHER PROPRIETARY INFORMATION OF DELL INC. ("DELL") THIS DOCUMENT MAY NOT BE TRANSFERRED OR COPIED WITHOUT THE EXPRESS WRITTEN AUTHORIZATION OF DELL. IN ADDITION, NEITHER THIS SHEET NOR THE INFORMATION IT CONTAINS WAY BE USED BY OR DISCLOSED TO ANY THIRD PARTY WITHOUT DELL'S EXPRESS WRITTEN CONSENT.

DELL CONFIDENTIAL/PROPRIETARY

Compal Electronics, Inc.

Title: USH BCM5882 (2/2)

Size | Document Number: LA-6611P | Rev: 0.3

Date: Wednesday, January 26, 2011 | Sheet 35 of 64

http://hobi-elektronika.net

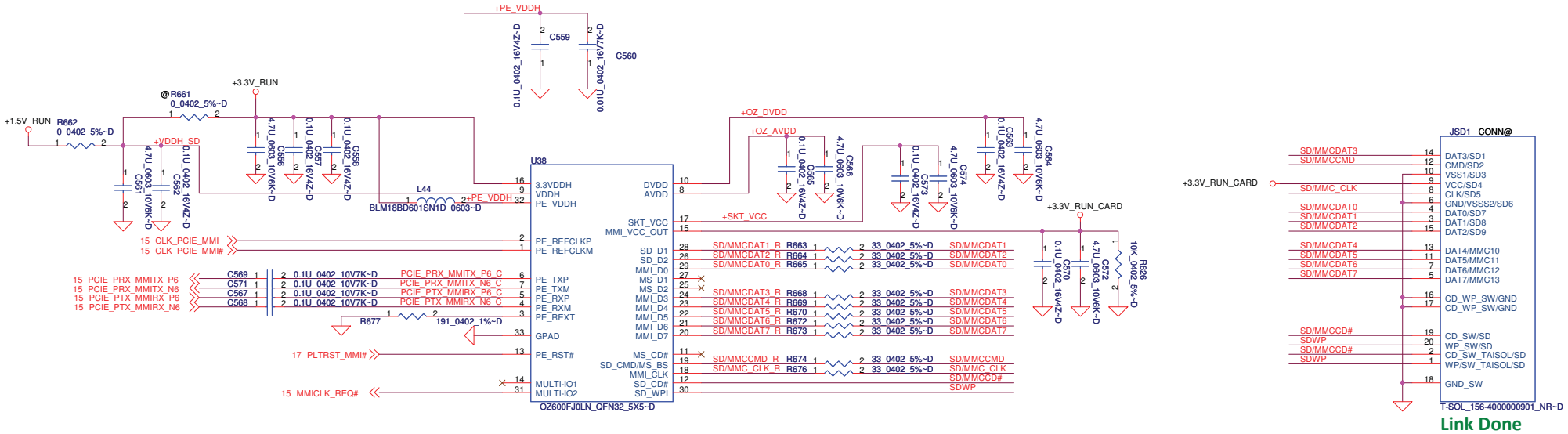

Link Done

PROPRIETARY NOTE: THIS SHEET OF ENGINEERING DRAWING AND SPECIFICATIONS CONTAINS CONFIDENTIAL TRADE SECRET AND OTHER PROPRIETARY INFORMATION OF DELL INC. ("DELL") THIS DOCUMENT MAY NOT BE TRANSFERRED OR COPIED WITHOUT THE EXPRESS WRITTEN AUTHORIZATION OF DELL. IN ADDITION, NEITHER THIS SHEET NOR THE INFORMATION IT CONTAINS WAY BE USED BY OR DISCLOSED TO ANY THIRD PARTY WITHOUT DELL'S EXPRESS WRITTEN CONSENT.

DELL CONFIDENTIAL/PROPRIETARY

Compal Electronics, Inc.

Title	OZ600FJ0	
Size	Document Number: LA-6591P	Rev 0.3
Date: Wednesday, January 26, 2011	Sheet 36 of 64	

http://hobi-elektronika.net

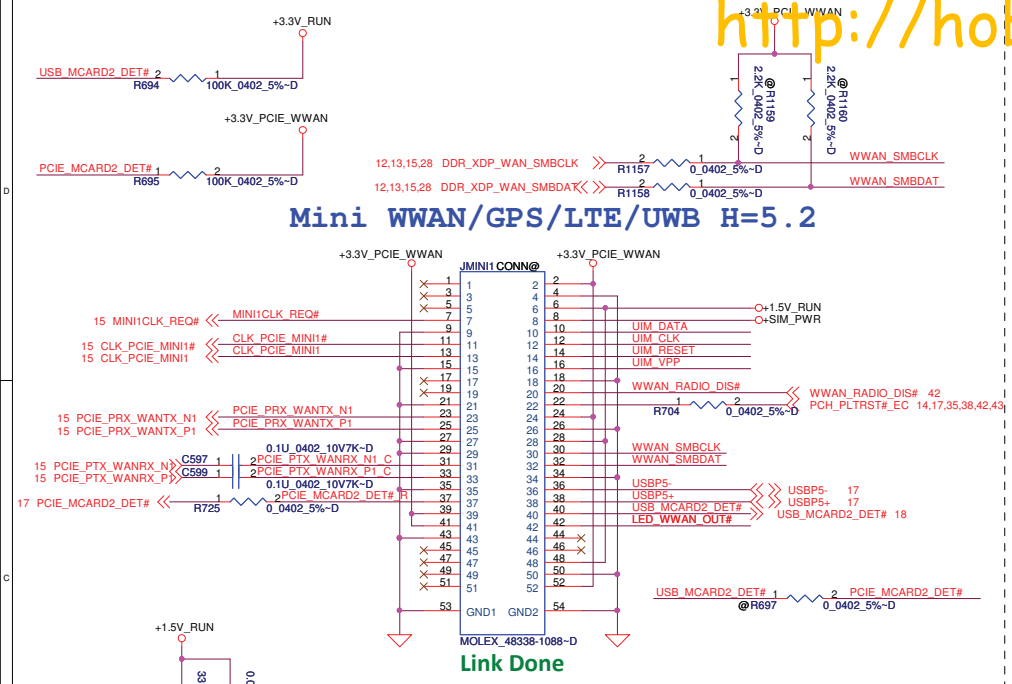

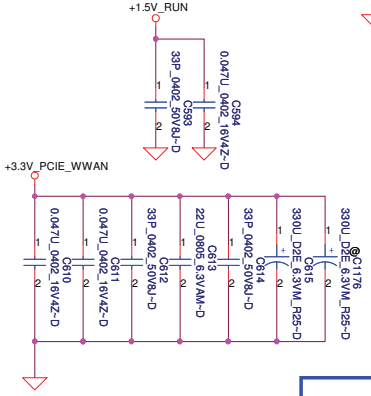

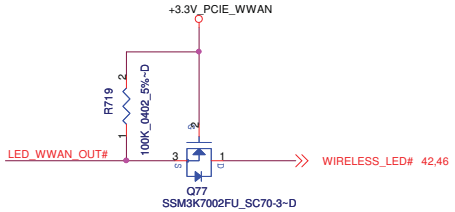

PWR Rail	Voltage Tolerance	Primary Power		Aux Power
		Peak	Normal	Normal
+3.3V	+-9%	1000	750	
+3.3Vaux	+-9%	330	250	250 (Wake enable) 5 (Not wake enable)
+1.5V	+-5%	500	375	NA

SIM Card Push-Push

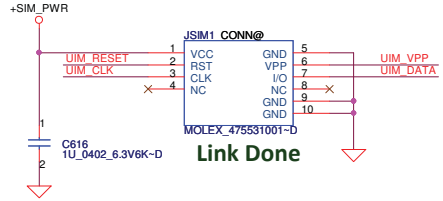

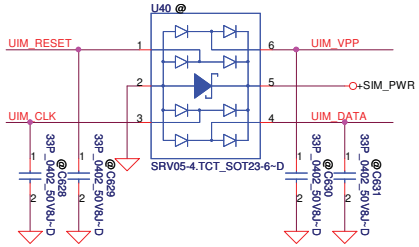

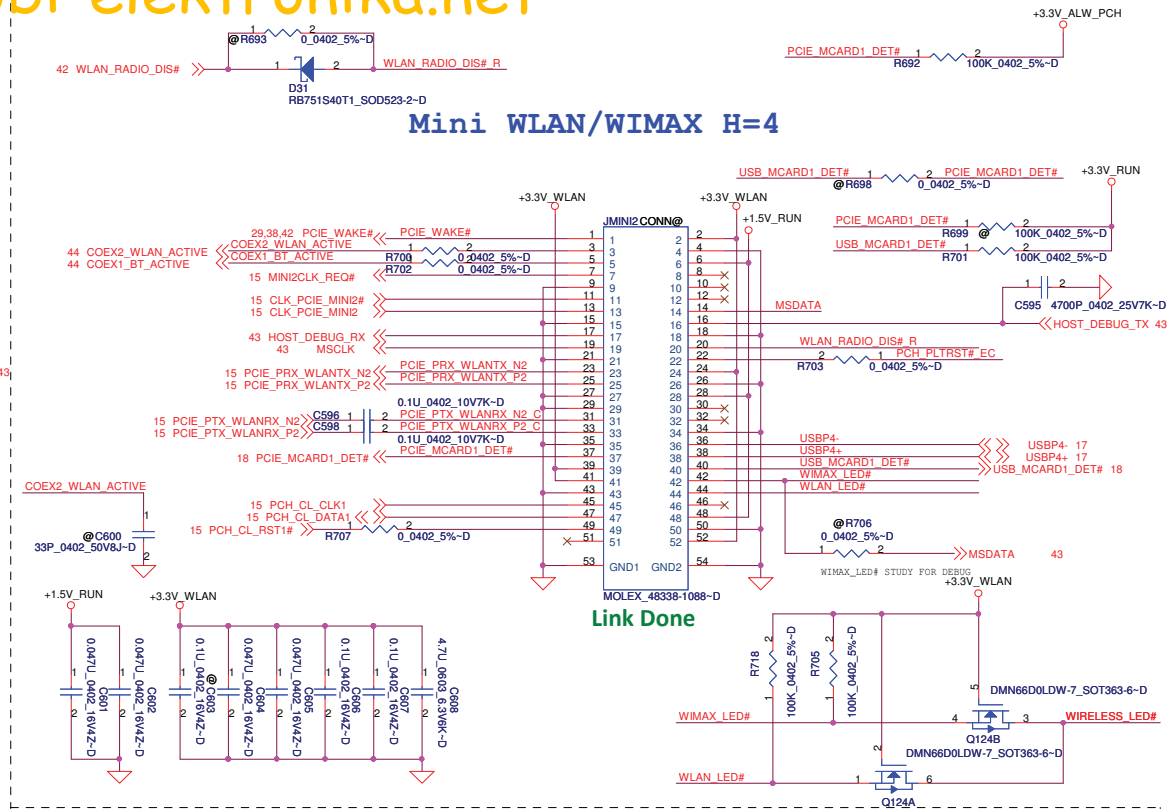

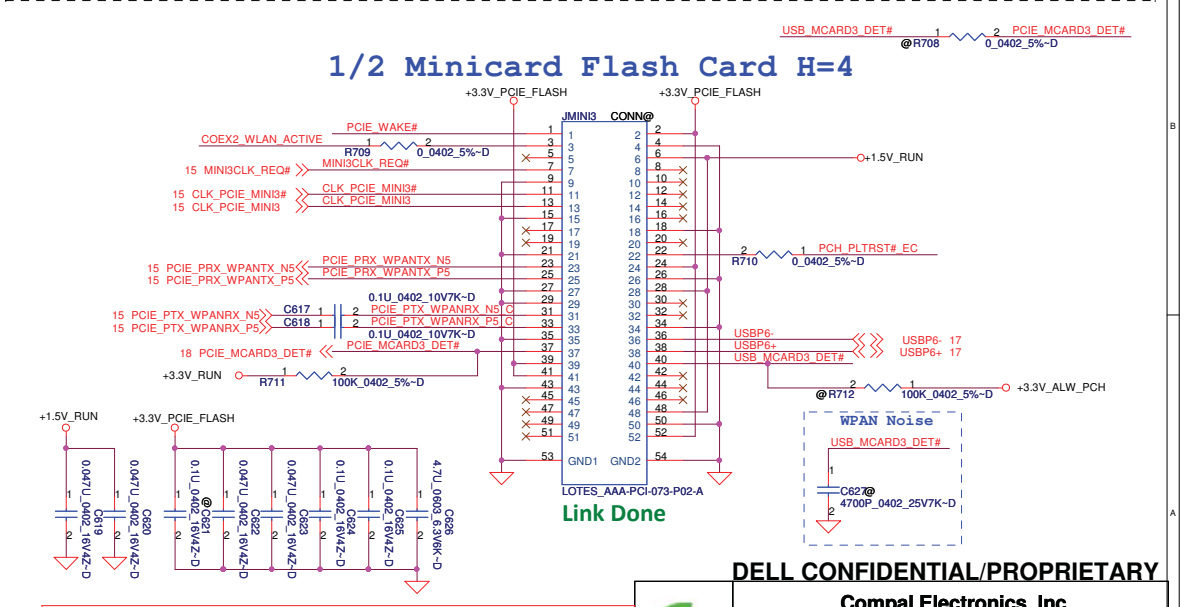

PROPRIETARY NOTE: THIS SHEET OF ENGINEERING DRAWING AND SPECIFICATIONS CONTAINS CONFIDENTIAL TRADE SECRET AND OTHER PROPRIETARY INFORMATION OF DELL INC. ("DELL") THIS DOCUMENT MAY NOT BE TRANSFERRED OR COPIED WITHOUT THE EXPRESS WRITTEN AUTHORIZATION OF DELL. IN ADDITION, NEITHER THIS SHEET NOR THE INFORMATION IT CONTAINS MAY BE USED BY OR DISCLOSED TO ANY THIRD PARTY WITHOUT DELL'S EXPRESS WRITTEN CONSENT.

DELL CONFIDENTIAL/PROPRIETARY

Compal Electronics, Inc.

Title: Mini Card

Size: | Document Number: LA-6611P | Rev: 0.3

Date: Wednesday, January 26, 2011 | Sheet 37 of 64

http://hobi-elektronika.net

Power Control for Mini card2

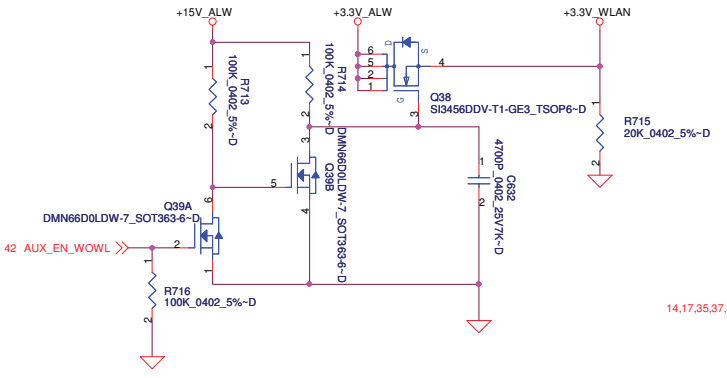

Express Card PWR S/W

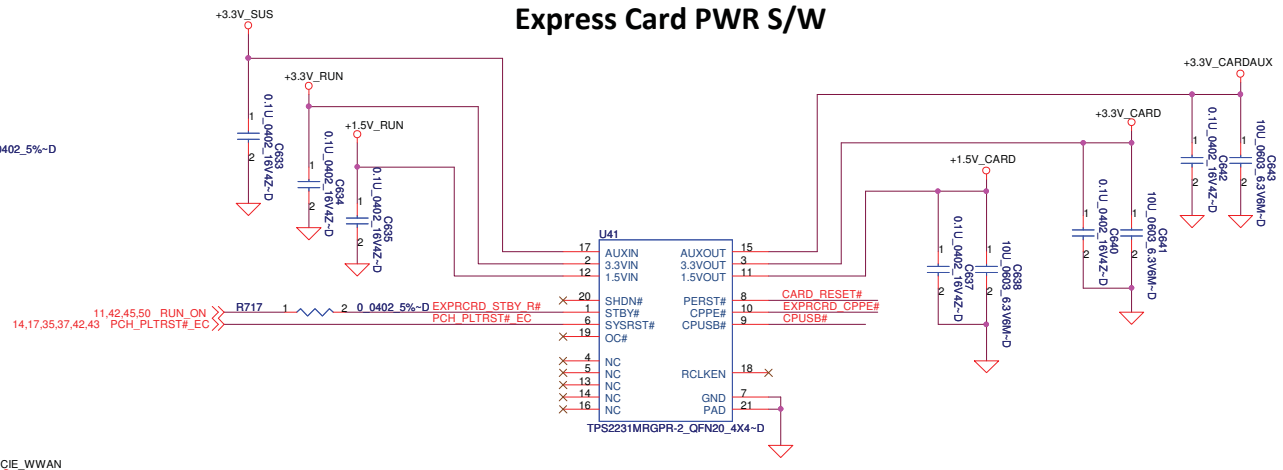

Power Control for Mini card1

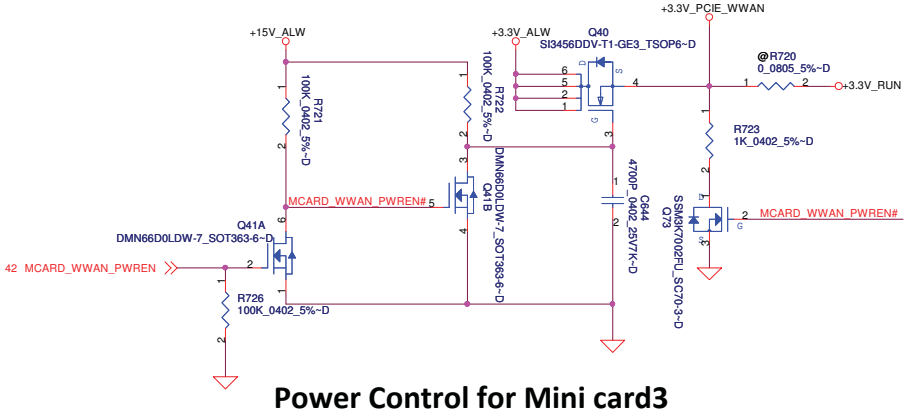

Power Control for Mini card3

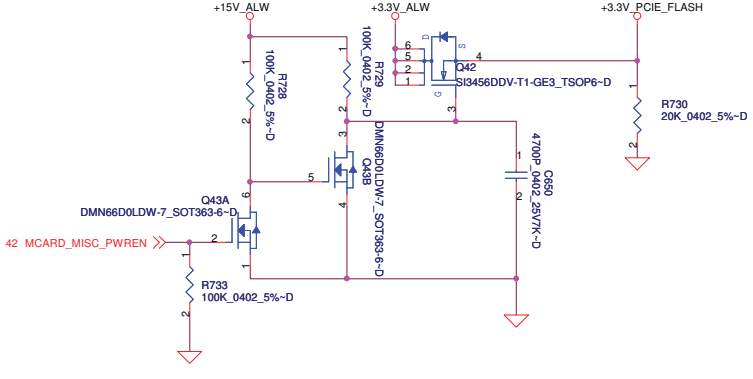

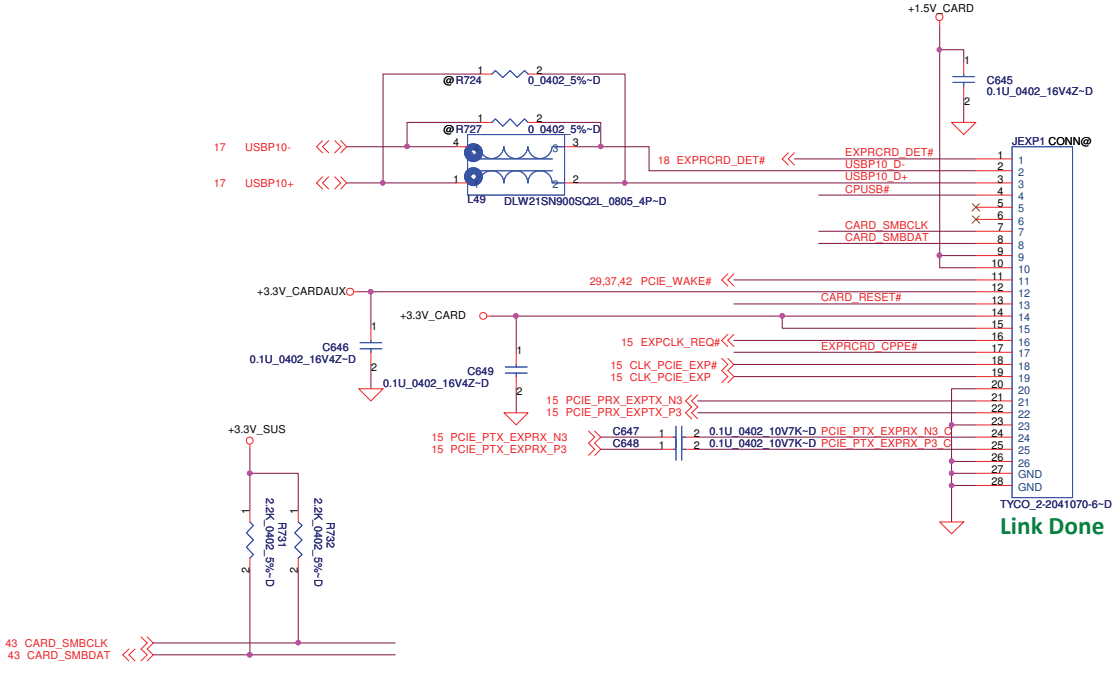

Link Done

PROPRIETARY NOTE: THIS SHEET OF ENGINEERING DRAWING AND SPECIFICATIONS CONTAINS CONFIDENTIAL TRADE SECRET AND OTHER PROPRIETARY INFORMATION OF DELL INC. ("DELL") THIS DOCUMENT MAY NOT BE TRANSFERRED OR COPIED WITHOUT THE EXPRESS WRITTEN AUTHORIZATION OF DELL. IN ADDITION, NEITHER THIS SHEET NOR THE INFORMATION IT CONTAINS WAY BE USED BY OR DISCLOSED TO ANY THIRD PARTY WITHOUT DELL'S EXPRESS WRITTEN CONSENT.

DELL CONFIDENTIAL/PROPRIETARY

Compal Electronics, Inc.

Title: PCIE-SATA SW / PCIE PWR

Size | Document Number: LA-6611P | Rev: 0.3

Date: Wednesday, January 26, 2011 | Sheet 38 of 64

http://hobi-elektronika.net

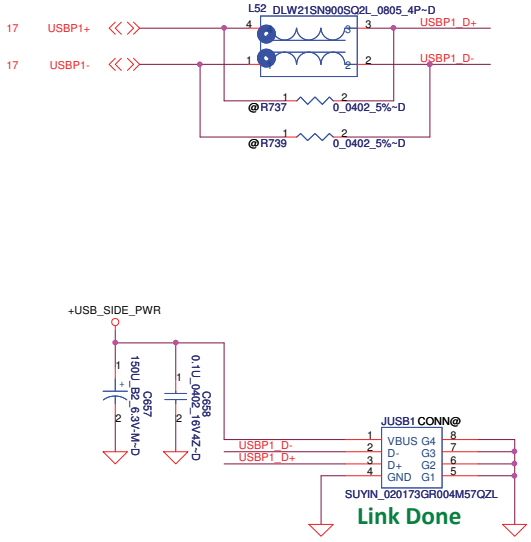

PROPRIETARY NOTE: THIS SHEET OF ENGINEERING DRAWING AND SPECIFICATIONS CONTAINS CONFIDENTIAL TRADE SECRET AND OTHER PROPRIETARY INFORMATION OF DELL INC. ("DELL") THIS DOCUMENT MAY NOT BE TRANSFERRED OR COPIED WITHOUT THE EXPRESS WRITTEN AUTHORIZATION OF DELL. IN ADDITION, NEITHER THIS SHEET NOR THE INFORMATION IT CONTAINS WAY BE USED BY OR DISCLOSED TO ANY THIRD PARTY WITHOUT DELL'S EXPRESS WRITTEN CONSENT.

DELL CONFIDENTIAL/PROPRIETARY

Compal Electronics, Inc.		
Title: USB x1		
Size	Document Number: LA-6611P	Rev: 0.3
Date: Wednesday, January 26, 2011	Sheet 39 of 64	

http://hobi-elektronika.net

ESATA Repeater

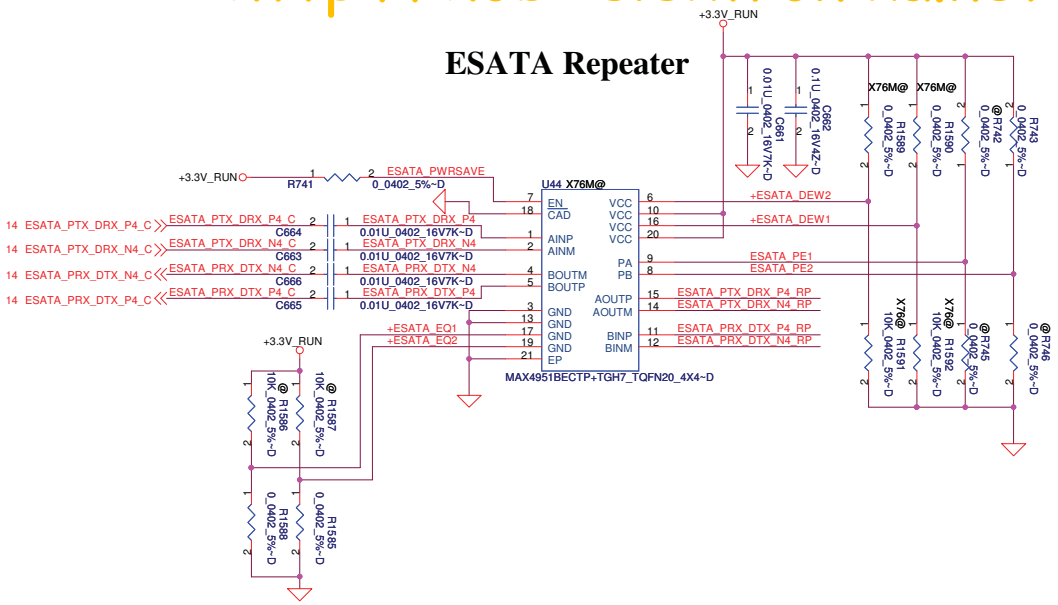

SA00003LH1L SA00003ZX0L

	MAXIM	TI
R1589 R1590	pop	depop
R1591 R1592	depop	pop

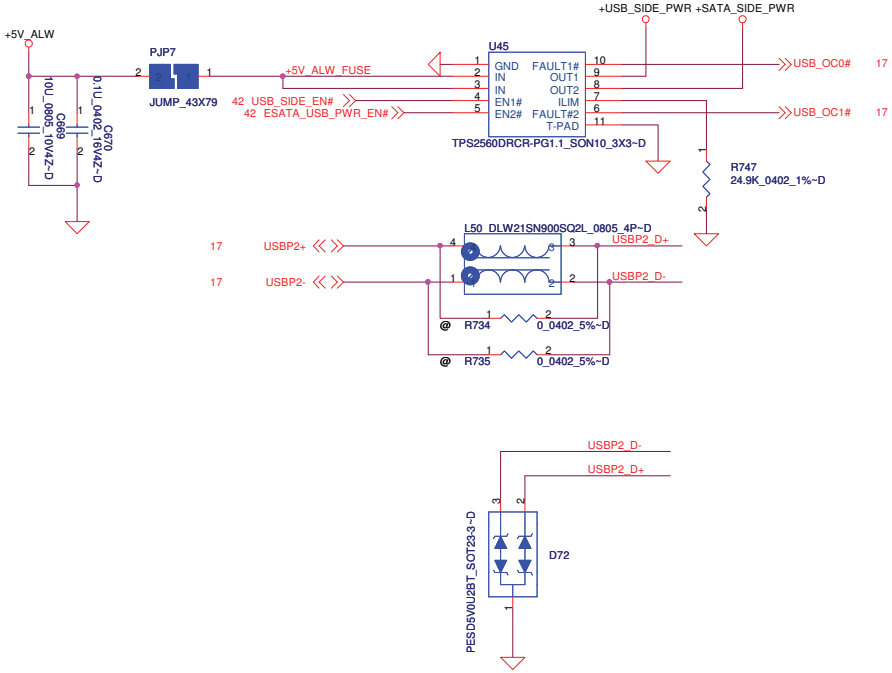

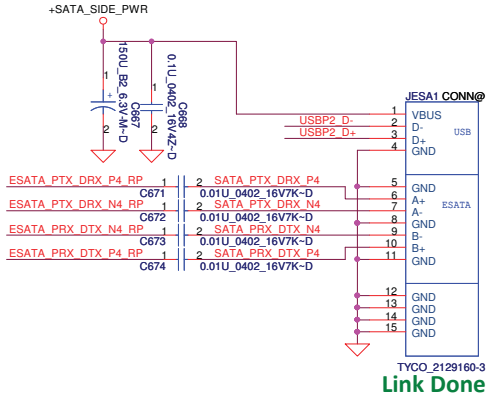

Link Done

PROPRIETARY NOTE: THIS SHEET OF ENGINEERING DRAWING AND SPECIFICATIONS CONTAINS CONFIDENTIAL TRADE SECRET AND OTHER PROPRIETARY INFORMATION OF DELL INC. ("DELL") THIS DOCUMENT MAY NOT BE TRANSFERRED OR COPIED WITHOUT THE EXPRESS WRITTEN AUTHORIZATION OF DELL. IN ADDITION, NEITHER THIS SHEET NOR THE INFORMATION IT CONTAINS WAY BE USED BY OR DISCLOSED TO ANY THIRD PARTY WITHOUT DELL'S EXPRESS WRITTEN CONSENT.

DELL CONFIDENTIAL/PROPRIETARY

Compal Electronics, Inc.

Title: USB/ESATA/IO

Size | Document Number: LA-6611P | Rev: 0.3

Date: Wednesday, January 26, 2011 | Sheet 40 of 64

http://hobi-elektronika.net

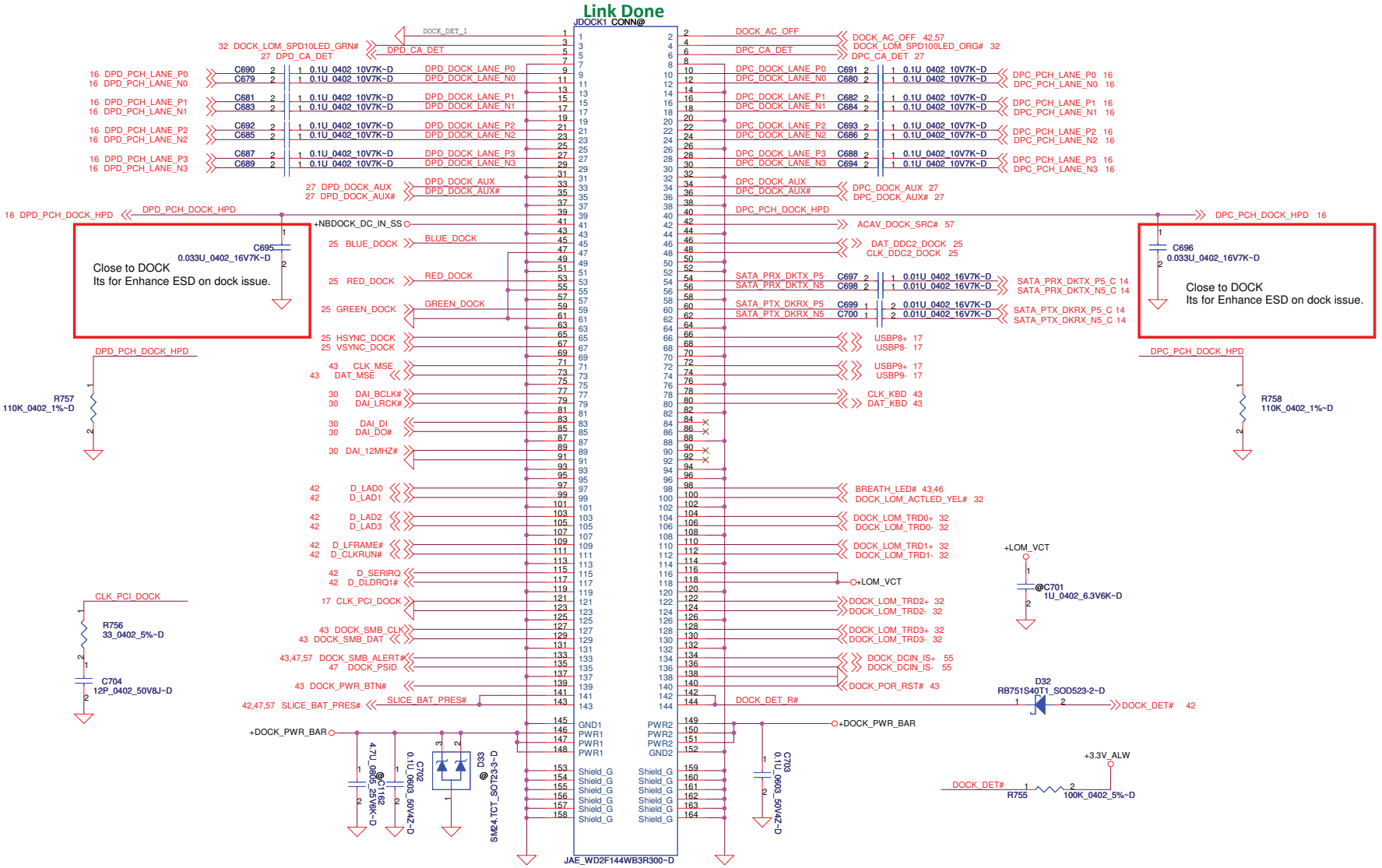

PROPRIETARY NOTE: THIS SHEET OF ENGINEERING DRAWING AND SPECIFICATIONS CONTAINS CONFIDENTIAL TRADE SECRET AND OTHER PROPRIETARY INFORMATION OF DELL INC. ("DELL") THIS DOCUMENT MAY NOT BE TRANSFERRED OR COPIED WITHOUT THE EXPRESS WRITTEN AUTHORIZATION OF DELL. IN ADDITION, NEITHER THIS SHEET NOR THE INFORMATION IT CONTAINS WAY BE USED BY OR DISCLOSED TO ANY THIRD PARTY WITHOUT DELL'S EXPRESS WRITTEN CONSENT.

DELL CONFIDENTIAL/PROPRIETARY

Compal Electronics, Inc.

Title	**DOCKING CONN**	
Size	Document Number **LA-6611P**	Rev 0.3
Date: Wednesday, January 26, 2011	Sheet 41 of 64	

http://hobi-elektronika.net

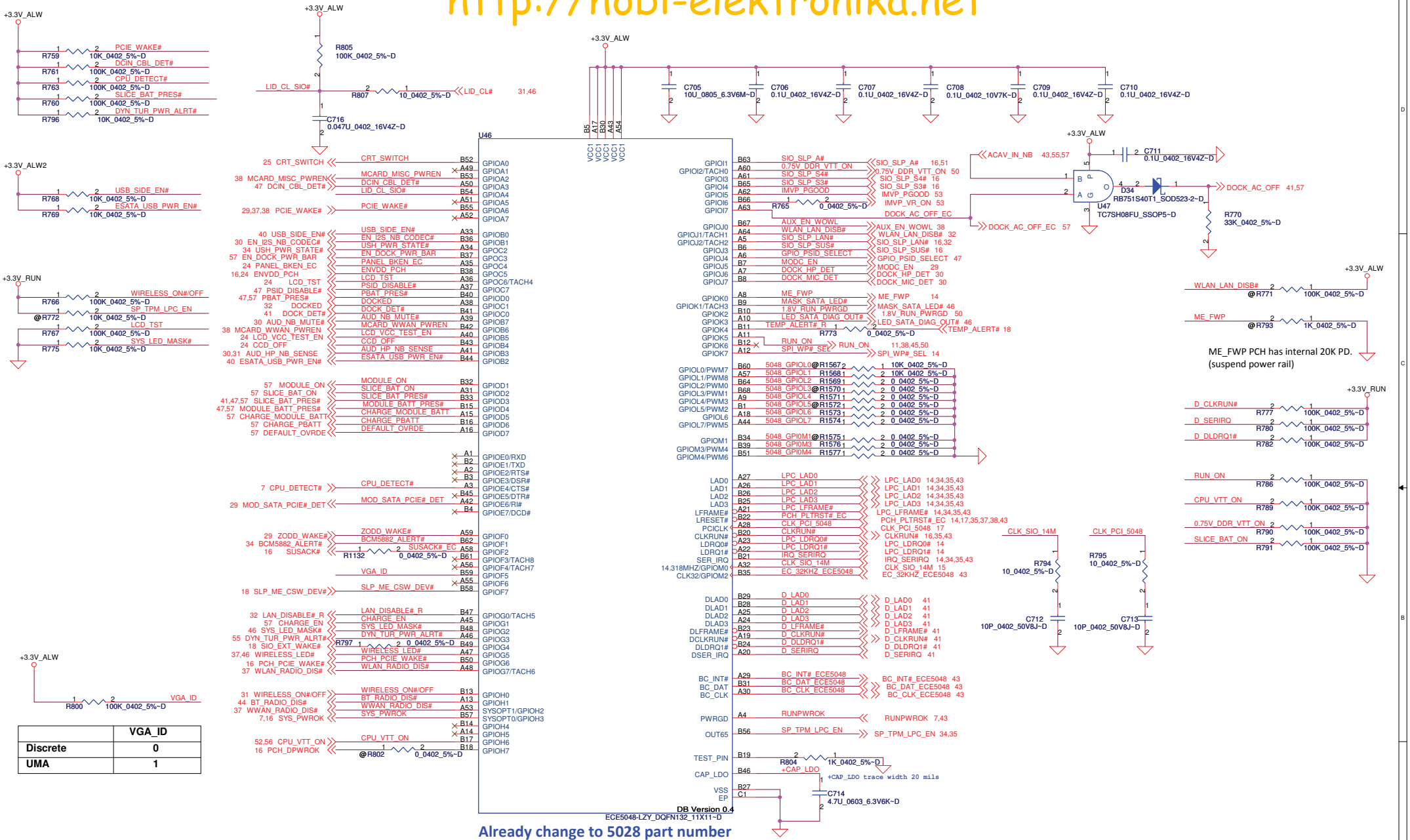

	VGA_ID
Discrete	0
UMA	1

Already change to 5028 part number

PROPRIETARY NOTE: THIS SHEET OF ENGINEERING DRAWING AND SPECIFICATIONS CONTAINS CONFIDENTIAL TRADE SECRET AND OTHER PROPRIETARY INFORMATION OF DELL INC. ("DELL") THIS DOCUMENT MAY NOT BE TRANSFERRED OR COPIED WITHOUT THE EXPRESS WRITTEN AUTHORIZATION OF DELL. IN ADDITION, NEITHER THIS SHEET NOR THE INFORMATION IT CONTAINS MAY BE USED BY OR DISCLOSED TO ANY THIRD PARTY WITHOUT DELL'S EXPRESS WRITTEN CONSENT.

DELL CONFIDENTIAL/PROPRIETARY

Compal Electronics, Inc.

Title: ECE5048

Size: | Document Number: LA-6611P | Rev: 0.3

Date: Wednesday, January 26, 2011 | Sheet 42 of 64

http://hobi-elektronika.net

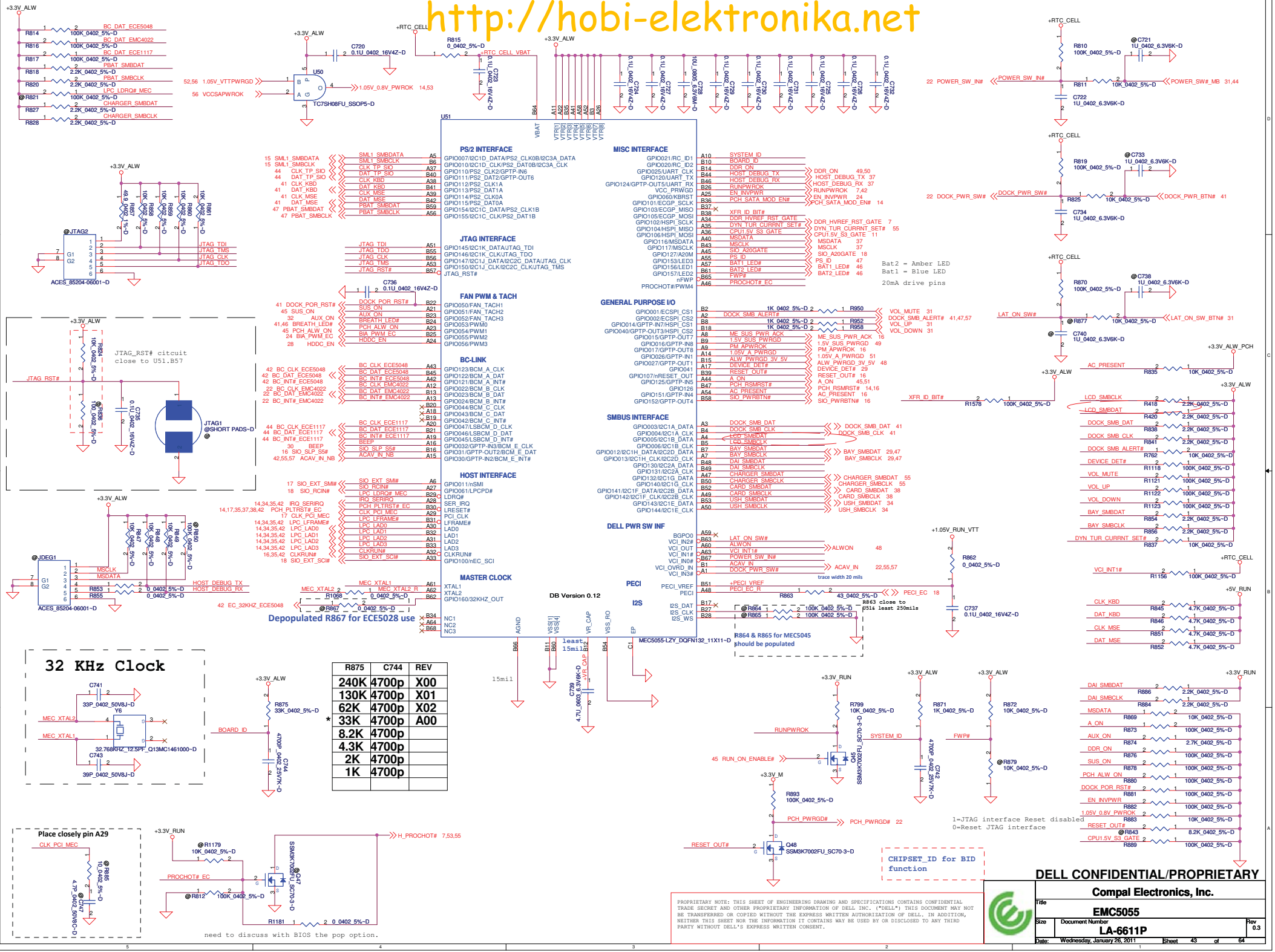

R875	C744	REV
240K	4700p	X00
130K	4700p	X01
62K	4700p	X02
33K	4700p	A00
8.2K	4700p	
4.3K	4700p	
2K	4700p	
1K	4700p	

http://hobi-elektronika.net

Touch Pad

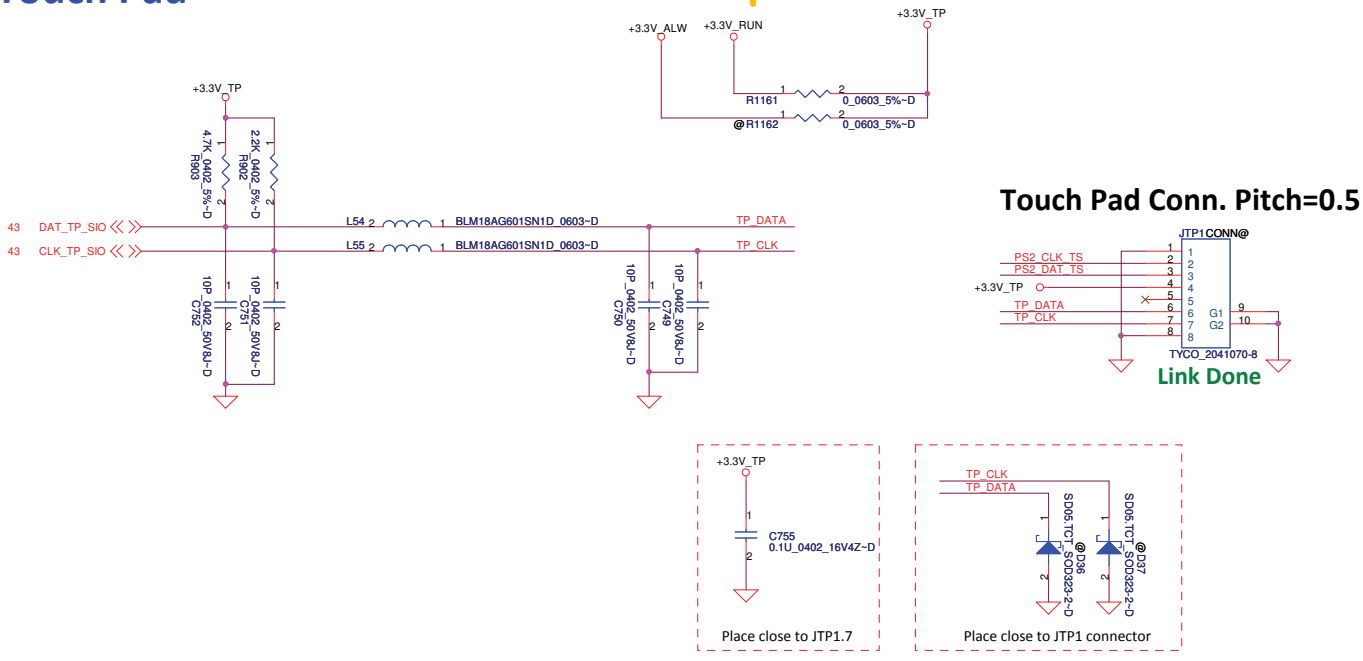

BlueTooth

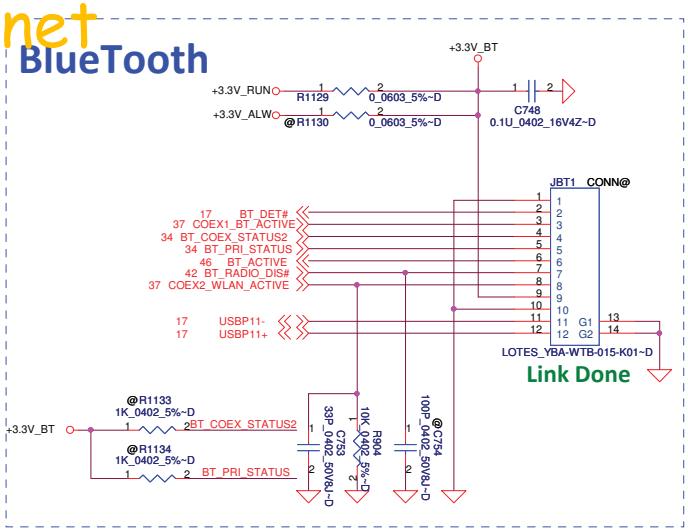

Power Switch for debug

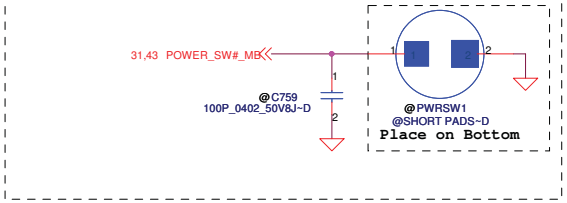

Keyboard

KB Conn. Pitch=1.0mm

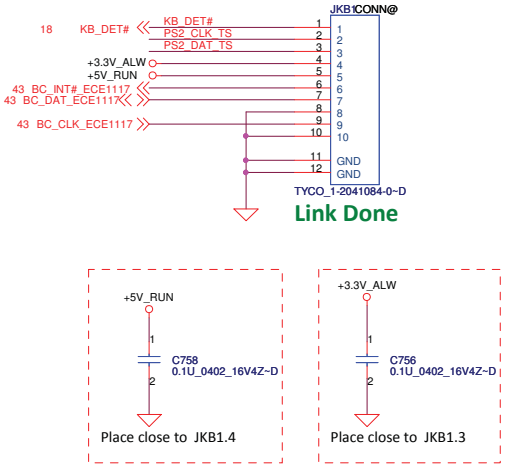

PROPRIETARY NOTE: THIS SHEET OF ENGINEERING DRAWING AND SPECIFICATIONS CONTAINS CONFIDENTIAL TRADE SECRET AND OTHER PROPRIETARY INFORMATION OF DELL INC. ("DELL") THIS DOCUMENT MAY NOT BE TRANSFERRED OR COPIED WITHOUT THE EXPRESS WRITTEN AUTHORIZATION OF DELL. IN ADDITION, NEITHER THIS SHEET NOR THE INFORMATION IT CONTAINS WAY BE USED BY OR DISCLOSED TO ANY THIRD PARTY WITHOUT DELL'S EXPRESS WRITTEN CONSENT.

DELL CONFIDENTIAL/PROPRIETARY

Compal Electronics, Inc.

Title	Int KB/Touch PAD/BT	
Size	Document Number LA-6611P	Rev 0.3
Date: Wednesday, January 26, 2011	Sheet 44 of 64	

http://hobi-elektronika.net

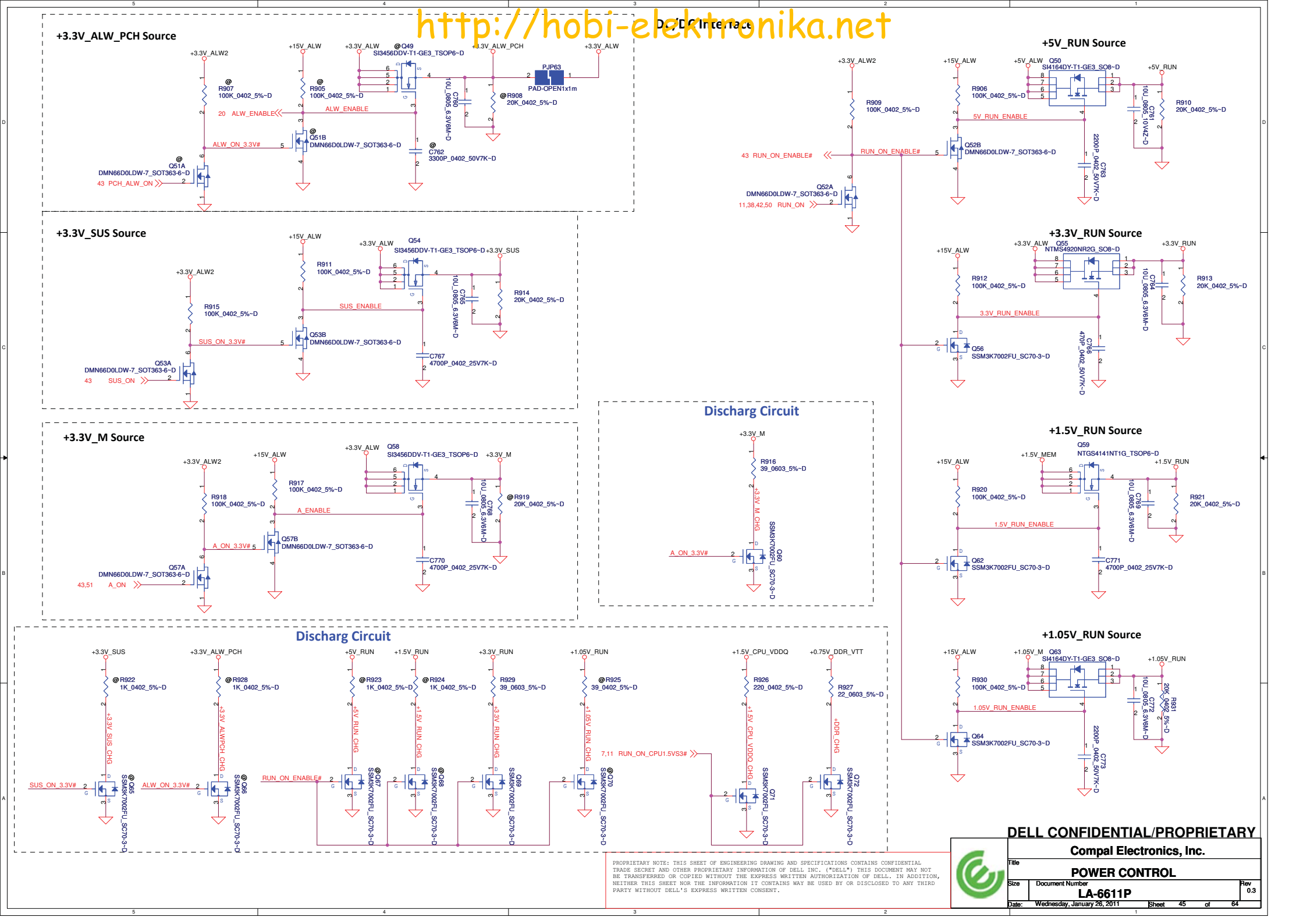

DELL CONFIDENTIAL/PROPRIETARY

Compal Electronics, Inc.

Title: POWER CONTROL

Size: | Document Number: LA-6611P | Rev: 0.3

Date: Wednesday, January 26, 2011 | Sheet 45 of 64

PROPRIETARY NOTE: THIS SHEET OF ENGINEERING DRAWING AND SPECIFICATIONS CONTAINS CONFIDENTIAL TRADE SECRET AND OTHER PROPRIETARY INFORMATION OF DELL INC. ("DELL") THIS DOCUMENT MAY NOT BE TRANSFERRED OR COPIED WITHOUT THE EXPRESS WRITTEN AUTHORIZATION OF DELL. IN ADDITION, NEITHER THIS SHEET NOR THE INFORMATION IT CONTAINS WAY BE USED BY OR DISCLOSED TO ANY THIRD PARTY WITHOUT DELL'S EXPRESS WRITTEN CONSENT.

http://hobi-elektronika.net

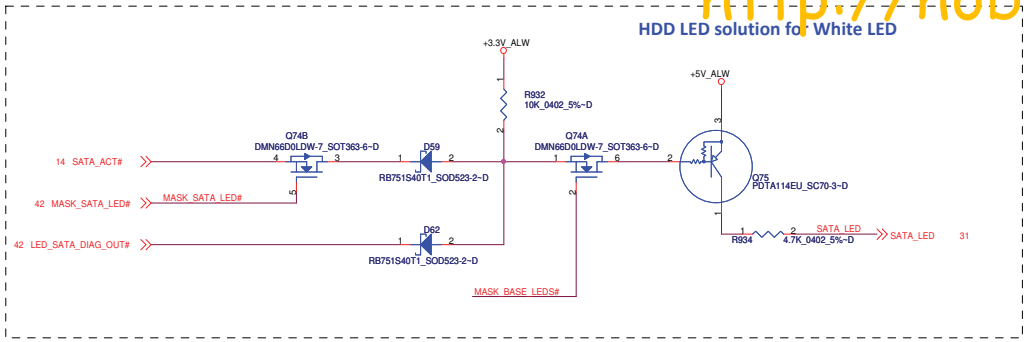

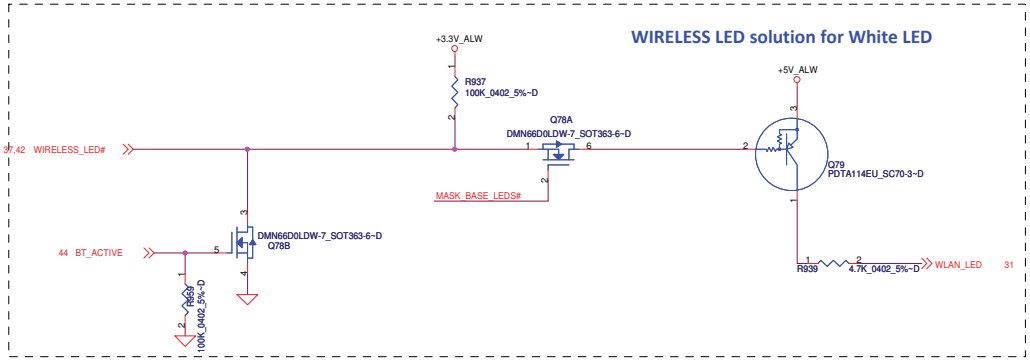

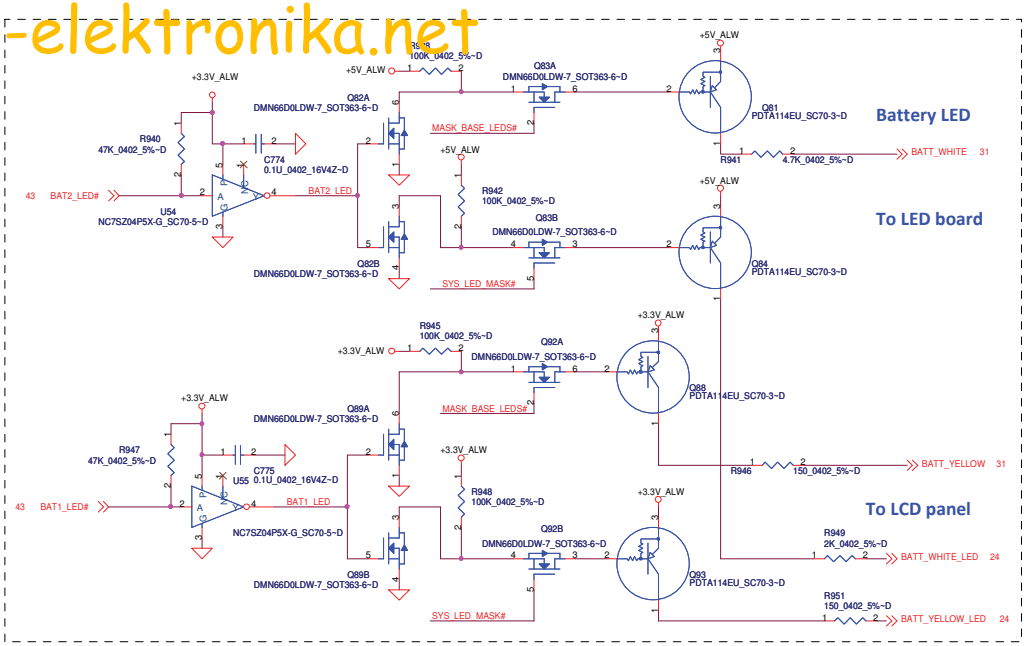

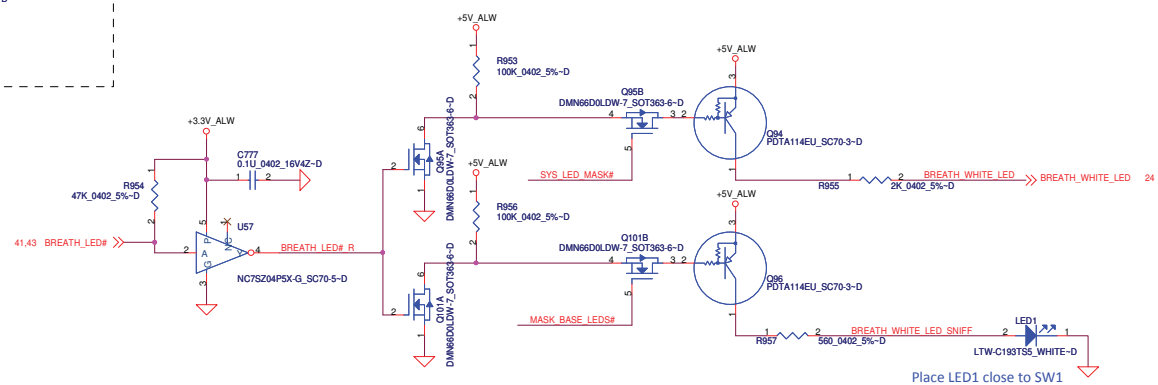

LED Circuit Control Table		
	SYS_LED_MASK#	LID_CL#
Mask All LEDs (Sniffer Function)	0	X
Mask Base MB LEDs (Lid Closed)	1	0
Do not Mask LEDs (Lid Opened)	1	1

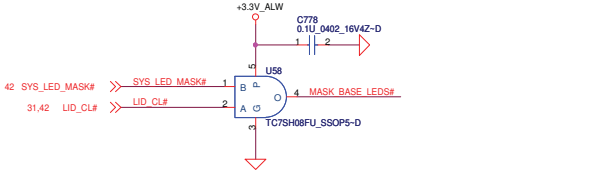

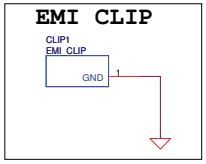

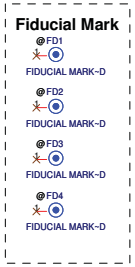

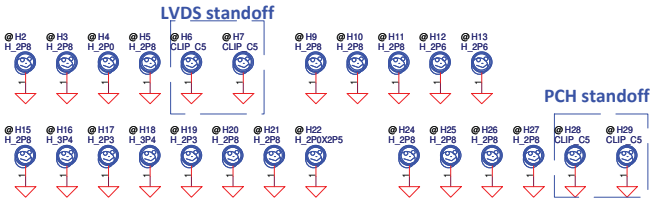

PROPRIETARY NOTE: THIS SHEET OF ENGINEERING DRAWING AND SPECIFICATIONS CONTAINS CONFIDENTIAL TRADE SECRET AND OTHER PROPRIETARY INFORMATION OF DELL INC. ("DELL") THIS DOCUMENT MAY NOT BE TRANSFERRED OR COPIED WITHOUT THE EXPRESS WRITTEN AUTHORIZATION OF DELL. IN ADDITION, NEITHER THIS SHEET NOR THE INFORMATION IT CONTAINS WAY BE USED BY OR DISCLOSED TO ANY THIRD PARTY WITHOUT DELL'S EXPRESS WRITTEN CONSENT.

DELL CONFIDENTIAL/PROPRIETARY
Compal Electronics, Inc.
Title: PAD & ME & LED
Size: Document Number: LA-6611P
Rev: 0.3
Date: Wednesday, January 26, 2011
Sheet 46 of 64

http://hobi-elektronika.net

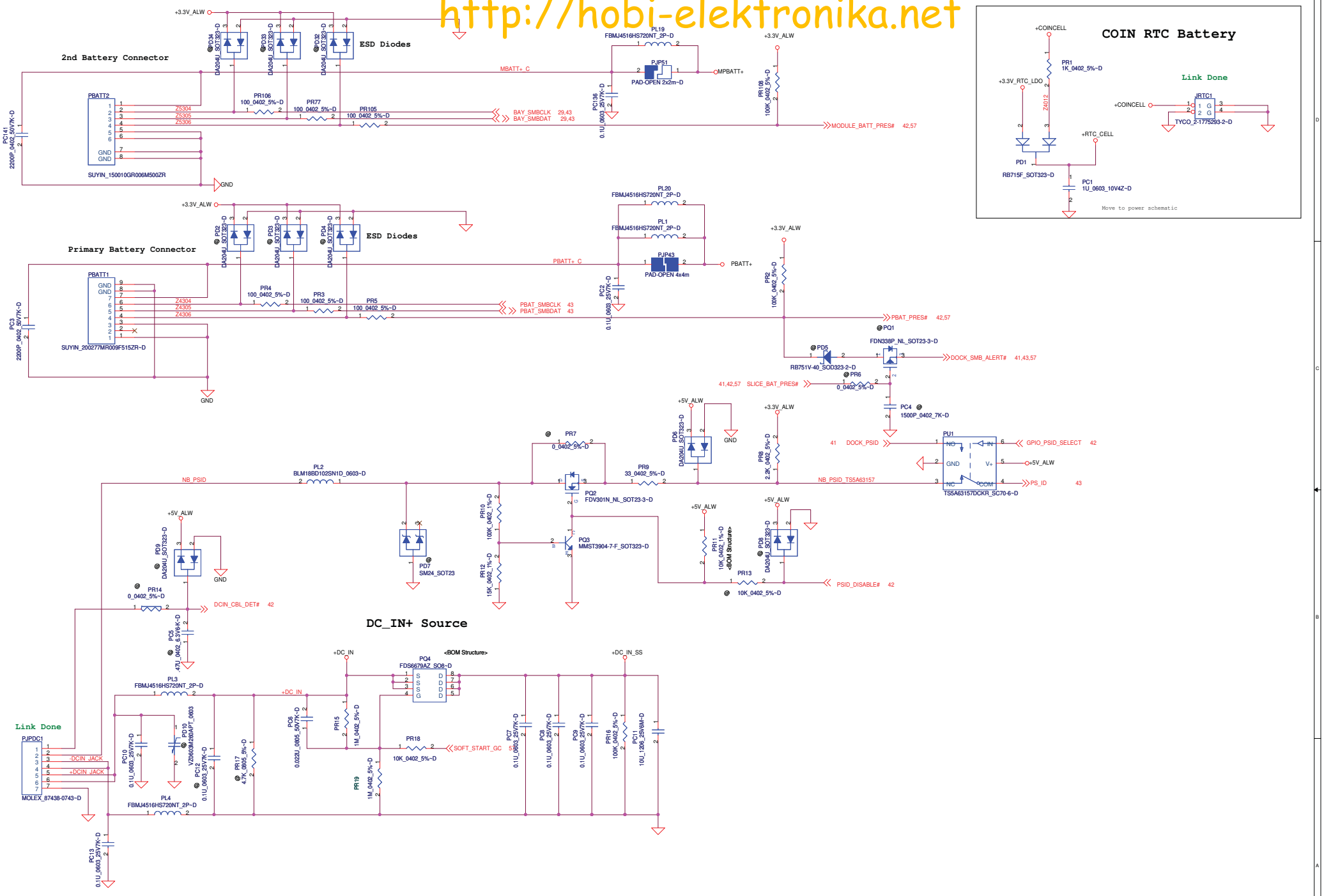

DELL CONFIDENTIAL/PROPRIETARY

THIS SHEET OF ENGINEERING DRAWING IS THE PROPRIETARY PROPERTY OF COMPAL ELECTRONICS, INC. AND CONTAINS CONFIDENTIAL AND TRADE SECRET INFORMATION. THIS SHEET MAY NOT BE TRANSFERED FROM THE CUSTODY OF THE COMPETENT DIVISION OF R&D DEPARTMENT EXCEPT AS AUTHORIZED BY COMPAL ELECTRONICS, INC. NEITHER THIS SHEET NOR THE INFORMATION IT CONTAINS MAY BE USED BY OR DISCLOSED TO ANY THIRD PARTY WITHOUT PRIOR WRITTEN CONSENT OF COMPAL ELECTRONICS, INC.

Compal Electronics, Inc.		
Title: +DCIN		
Size	Document Number: LA-6611P	Rev: 0.1
Date: Wednesday, January 26, 2011	Sheet 47 of 57	

http://hobi-elektronika.net

+3.3V_ALW1/ +5V_ALW1/ +5V_ALW2 / +15V_ALW2/ +3.3V_RTC_LDO

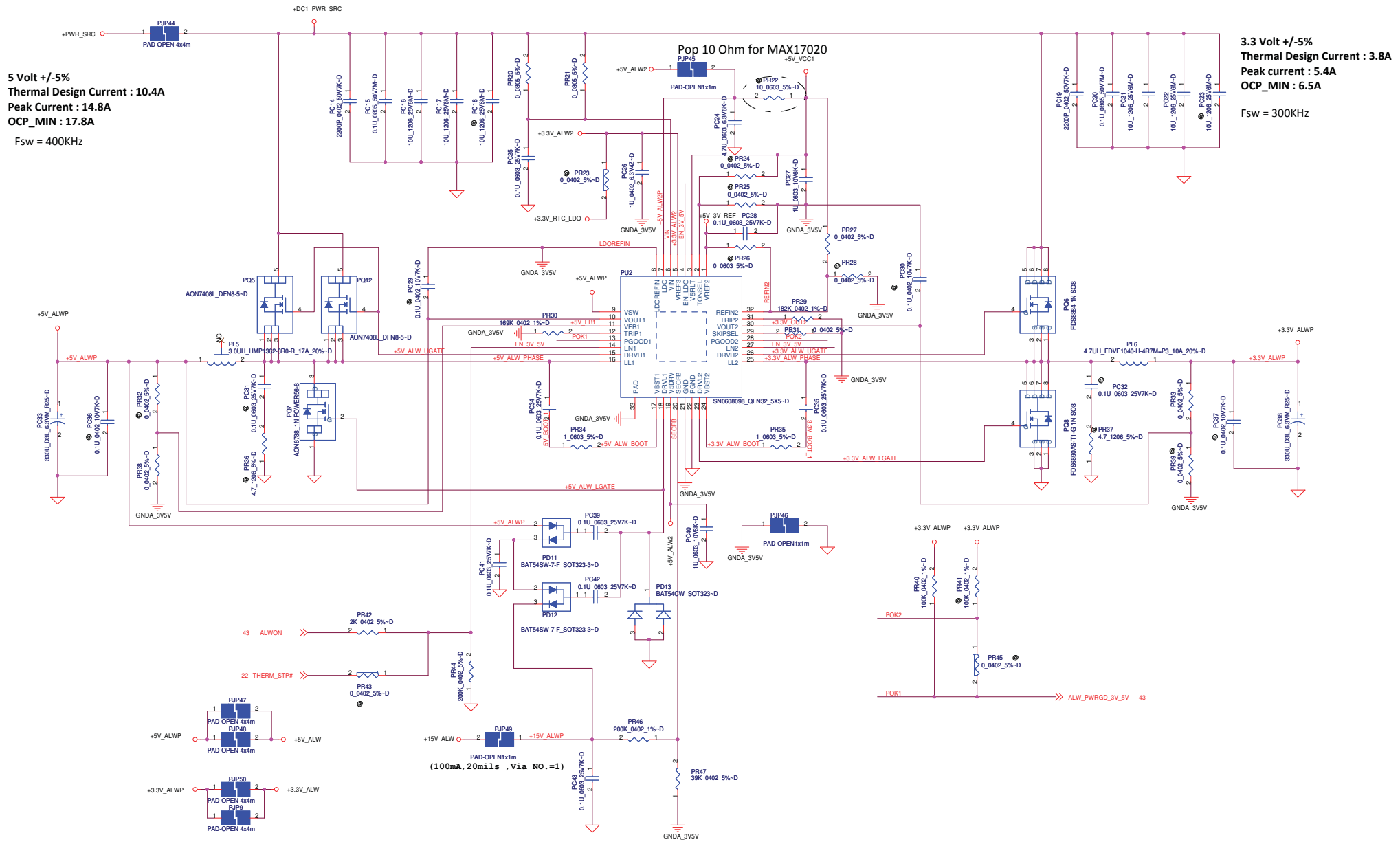

		PU2	PR22
Main	X7629631L90	SN0608098	un-pop
2nd	X7629631L91	MAX8878	10_ohm

DELL CONFIDENTIAL/PROPRIETARY

THIS SHEET OF ENGINEERING DRAWING IS THE PROPRIETARY PROPERTY OF COMPAL ELECTRONICS, INC. AND CONTAINS CONFIDENTIAL AND TRADE SECRET INFORMATION. THIS SHEET MAY NOT BE TRANSFERED FROM THE CUSTODY OF THE COMPETENT DIVISION OF R&D DEPARTMENT EXCEPT AS AUTHORIZED BY COMPAL ELECTRONICS, INC. NEITHER THIS SHEET NOR THE INFORMATION IT CONTAINS

Compal Electronics, Inc.

Title: DC/DC +3V/ +5V

Size | Document Number: LA-6611P | Rev: 0.1

Date: Wednesday, January 26, 2011 | Sheet 48 of 57

http://hobi-elektronika.net

+1.5V_SUS_P(TPS51318)

1.5 Volt +/-5%
Thermal Design Current: 9.8A
Peak current: 13.9
OCP_MIN:16.7A

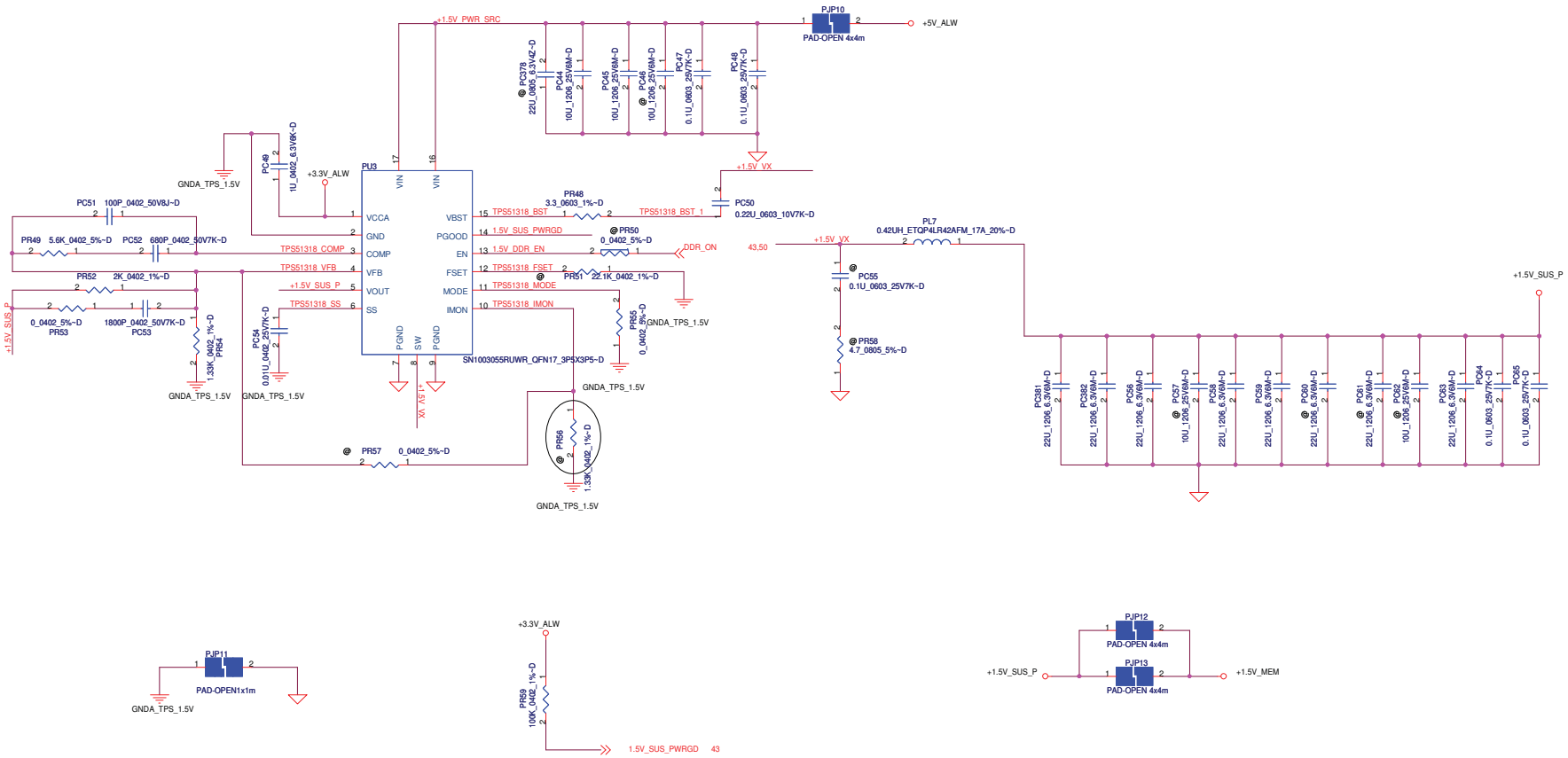

PROPRIETARY NOTE: THIS SHEET OF ENGINEERING DRAWING AND SPECIFICATIONS CONTAINS CONFIDENTIAL TRADE SECRET AND OTHER PROPRIETARY INFORMATION OF DELL INC. ("DELL"). THIS DOCUMENT MAY NOT BE TRANSFERRED OR COPIED WITHOUT THE EXPRESS WRITTEN AUTHORIZATION OF DELL. IN ADDITION, NEITHER THIS SHEET NOR THE INFORMATION IT CONTAINS WAY BE USED BY OR DISCLOSED TO ANY THIRD PARTY WITHOUT DELL'S EXPRESS WRITTEN CONSENT.

THIS SHEET OF ENGINEERING DRAWING IS THE PROPRIETARY PROPERTY OF COMPAL ELECTRONICS, INC. AND CONTAINS CONFIDENTIAL AND TRADE SECRET INFORMATION. THIS SHEET MAY NOT BE TRANSFERED FROM THE CUSTODY OF THE COMPETENT DIVISION OF R&D DEPARTMENT EXCEPT AS AUTHORIZED BY COMPAL ELECTRONICS, INC. NEITHER THIS SHEET NOR THE INFORMATION IT CONTAINS

DELL CONFIDENTIAL/PROPRIETARY

Compal Electronics, Inc.

Title	+1.5V MEM	
Size	Document Number: LA-6611P	Rev 0.1
Date: Wednesday, January 26, 2011	Sheet 49 of 57	

http://hobi-elektronika.net

+1.8V_RUNP

1.8 Volt +/-5%
Thermal Design Current: 0.99 A
Peak current: 1.415 A
OCP_MIN: 1.698 A

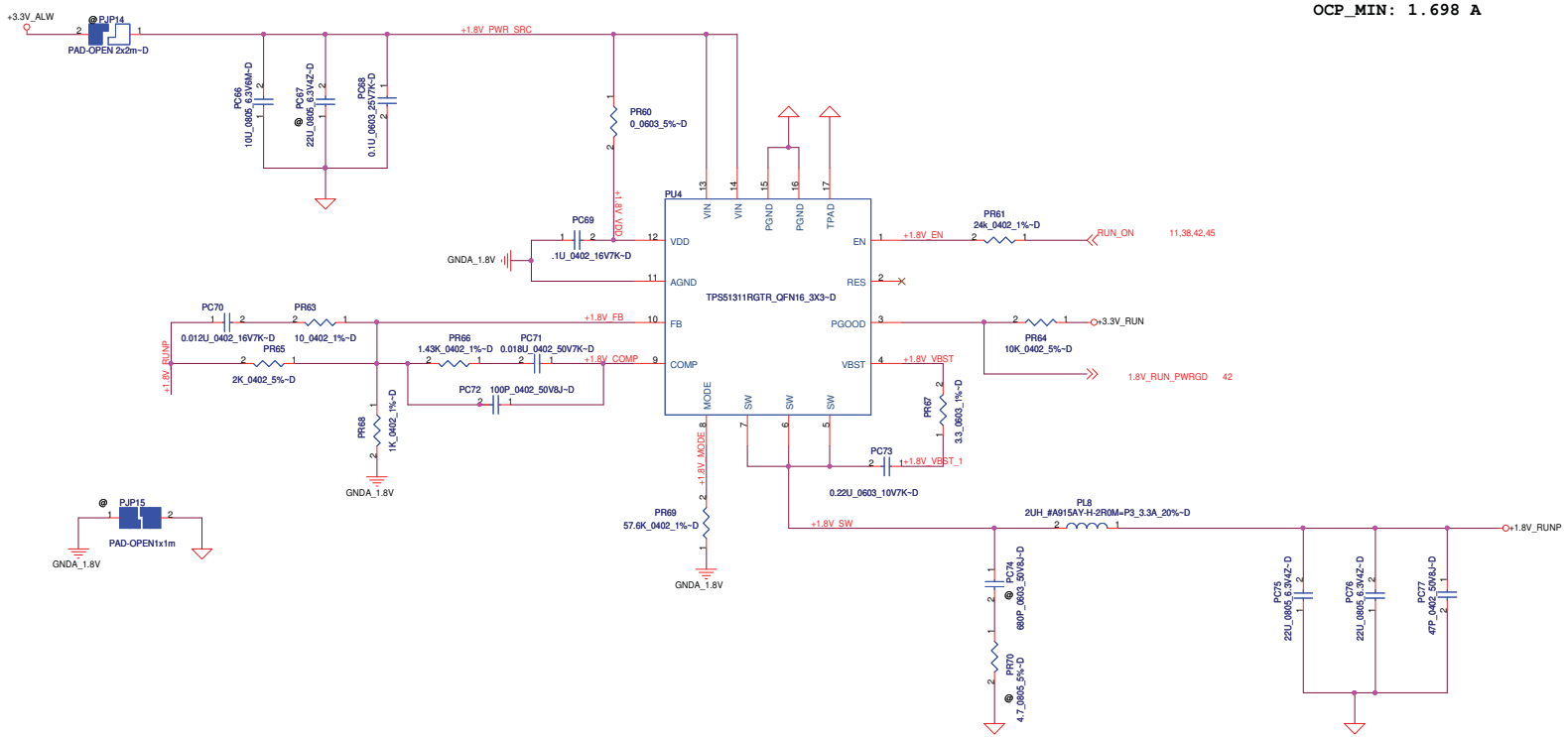

+0.75V_DDR_VTT

DDR3 Termination

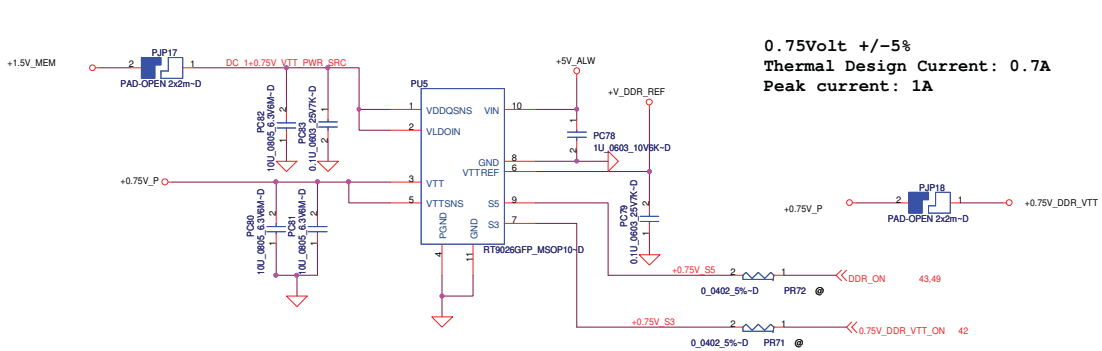

0.75Volt +/-5%
Thermal Design Current: 0.7A
Peak current: 1A

VOUT=1.8V
L=3.3uF
Fsw=290KHz
D=0.092
Input Ripple Current=TDC*(D*(1-D))^0.5=0.884A
Output Ripple Current=1.707A
Output Ripple Voltage=1.707*15m=20.5mV

PROPRIETARY NOTE: THIS SHEET OF ENGINEERING DRAWING AND SPECIFICATIONS CONTAINS CONFIDENTIAL TRADE SECRET AND OTHER PROPRIETARY INFORMATION OF DELL INC. ("DELL") THIS DOCUMENT MAY NOT BE TRANSFERRED OR COPIED WITHOUT THE EXPRESS WRITTEN AUTHORIZATION OF DELL. IN ADDITION, NEITHER THIS SHEET NOR THE INFORMATION IT CONTAINS WAY BE USED BY OR DISCLOSED TO ANY THIRD PARTY WITHOUT DELL'S EXPRESS WRITTEN CONSENT.

http://hobi-elektronika.net

+1.05V_M

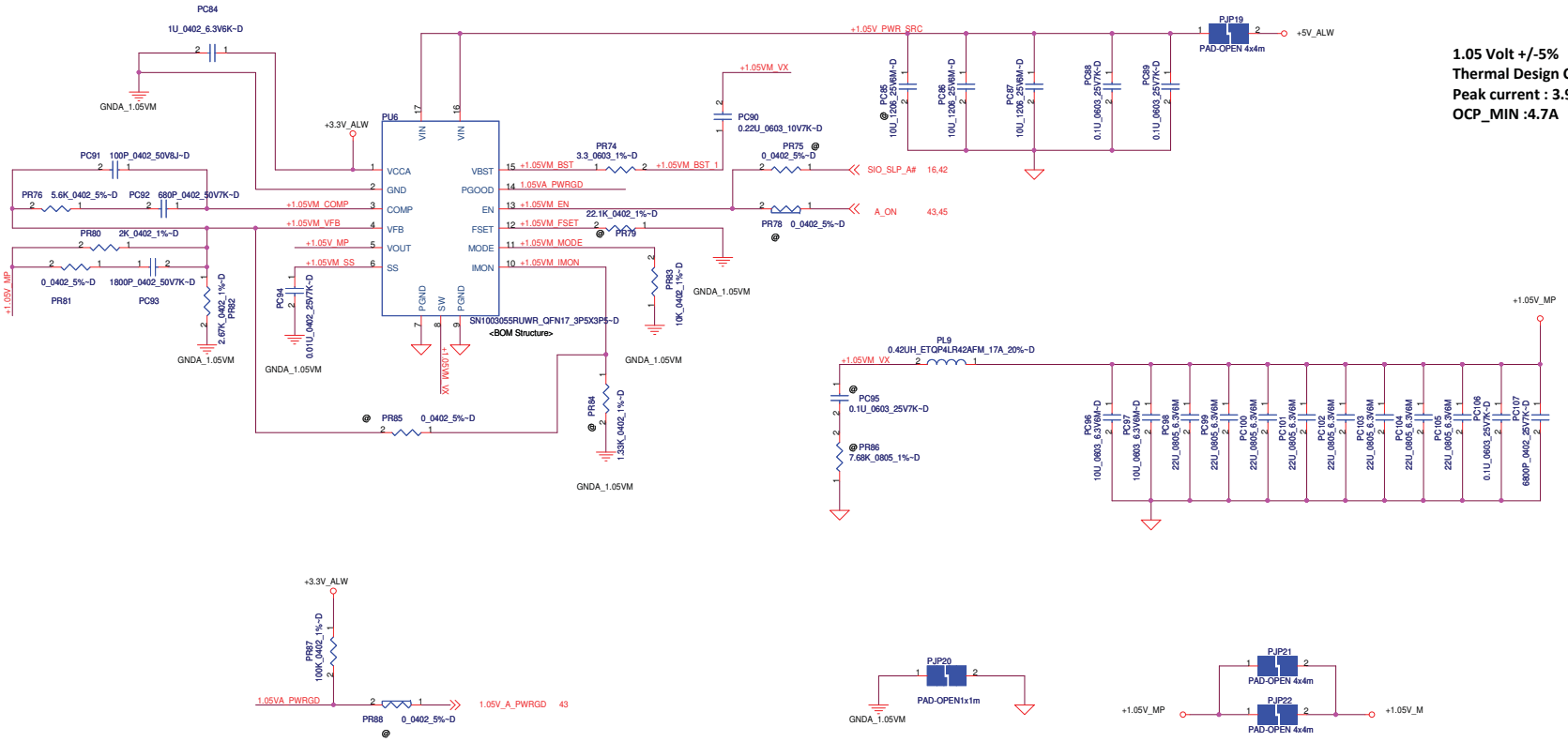

1.05 Volt +/-5%
Thermal Design Current : 2.7A
Peak current : 3.9A
OCP_MIN :4.7A

DELL CONFIDENTIAL/PROPRIETARY

Compal Electronics, Inc.		
Title: +1.05V_M		
Size	Document Number: LA-6611P	Rev: 0.1
Date: Wednesday, January 26, 2011	Sheet 51 of 57	

http://hobi-elektronika.net

+1.05VTT

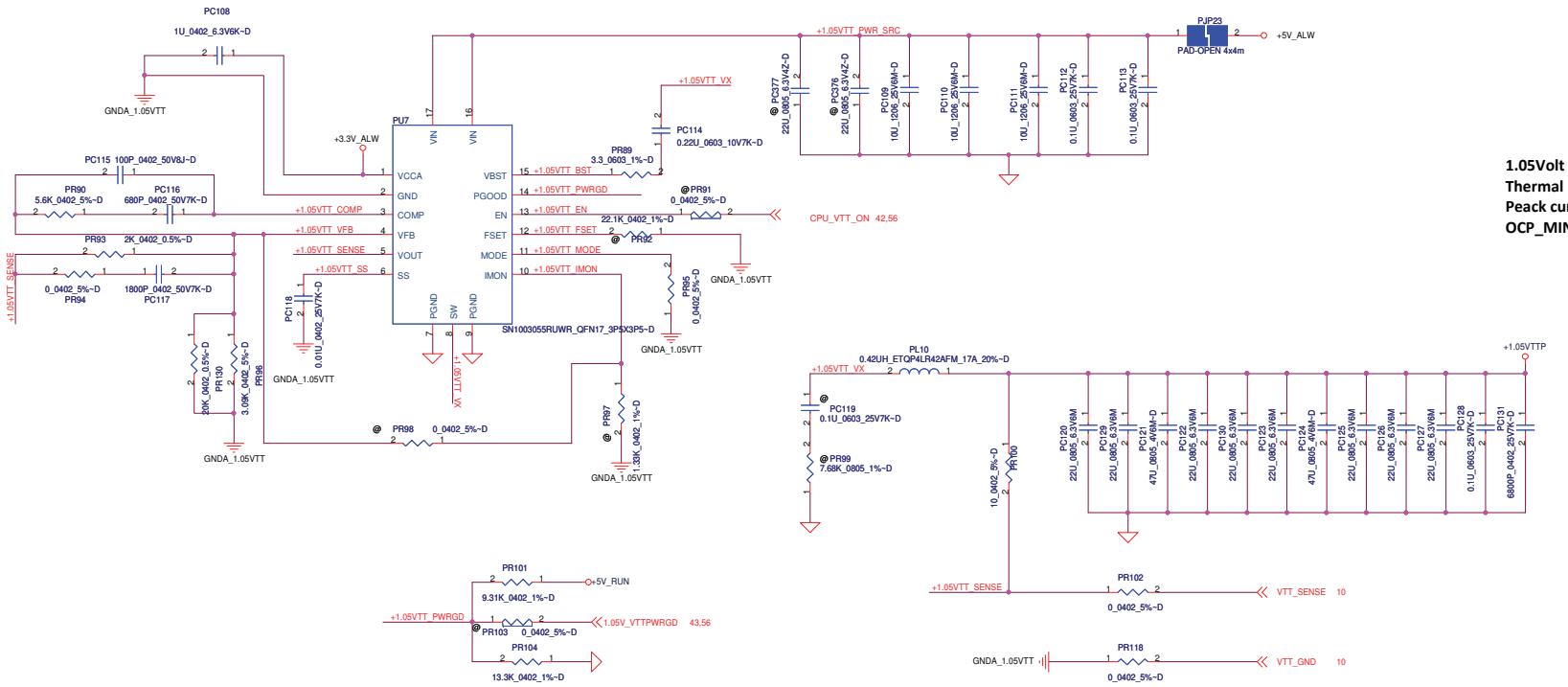

1.05Volt +/-5%
Thermal Design Current : 9.2A
Peack current : 13.1A
OCP_MIN : 15.8A

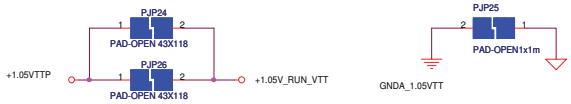

DELL CONFIDENTIAL/PROPRIETARY

THIS SHEET OF ENGINEERING DRAWING IS THE PROPRIETARY PROPERTY OF COMPAL ELECTRONICS, INC. AND CONTAINS CONFIDENTIAL AND TRADE SECRET INFORMATION. THIS SHEET MAY NOT BE TRANSFERED FROM THE CUSTODY OF THE COMPETENT DIVISION OF R&D DEPARTMENT EXCEPT AS AUTHORIZED BY COMPAL ELECTRONICS, INC. NEITHER THIS SHEET NOR THE INFORMATION IT CONTAINS MAY BE USED BY OR DISCLOSED TO ANY THIRD PARTY WITHOUT PRIOR WRITTEN CONSENT OF COMPAL ELECTRONICS, INC.

Compal Electronics, Inc.		
Title: ISL95870A +1.05V RUN VTT		
Size	Document Number: LA-6611P	Rev: 0.1
Date: Wednesday, January 26, 2011	Sheet 52 of 57	

http://hobi-elektronika.net

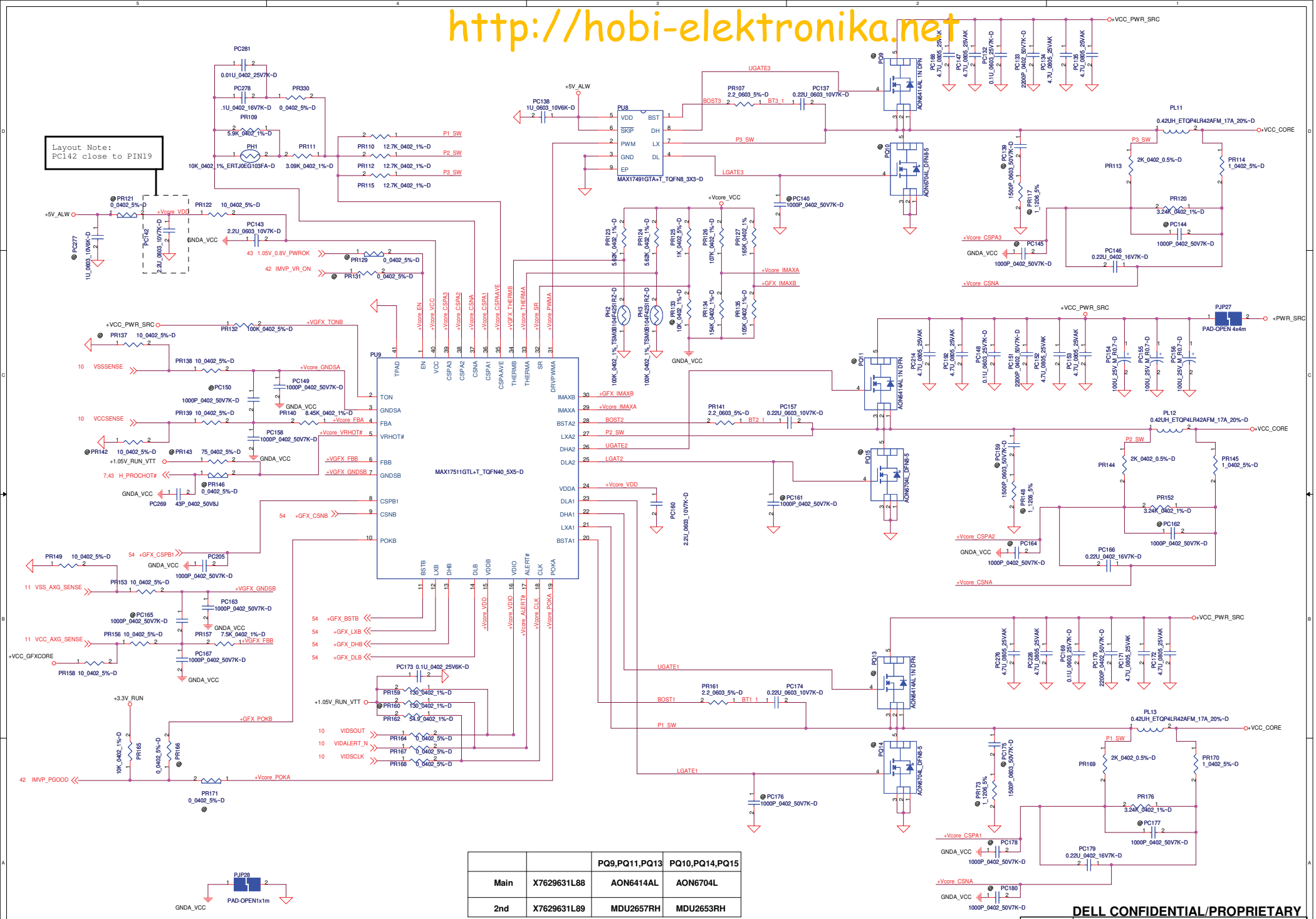

		PQ9,PQ11,PQ13	PQ10,PQ14,PQ15
Main	X7629631L88	AON6414AL	AON6704L
2nd	X7629631L89	MDU2657RH	MDU2653RH

THIS SHEET OF ENGINEERING DRAWING IS THE PROPRIETARY PROPERTY OF COMPAL ELECTRONICS, INC. AND CONTAINS CONFIDENTIAL AND TRADE SECRET INFORMATION. THIS SHEET MAY NOT BE TRANSFERED FROM THE CUSTODY OF THE COMPETENT DIVISION OF R&D DEPARTMENT EXCEPT AS AUTHORIZED BY COMPAL ELECTRONICS, INC. NEITHER THIS SHEET NOR THE INFORMATION IT CONTAINS MAY BE USED BY OR DISCLOSED TO ANY THIRD PARTY WITHOUT PRIOR WRITTEN CONSENT OF COMPAL ELECTRONICS, INC.

DELL CONFIDENTIAL/PROPRIETARY

Compal Electronics, Inc.

Title: **Vcore**

Size | Document Number: **DB-609** | Rev: 0.1

Date: Wednesday, January 26, 2011 | Sheet 53 of 57

http://hobi-elektronika.net

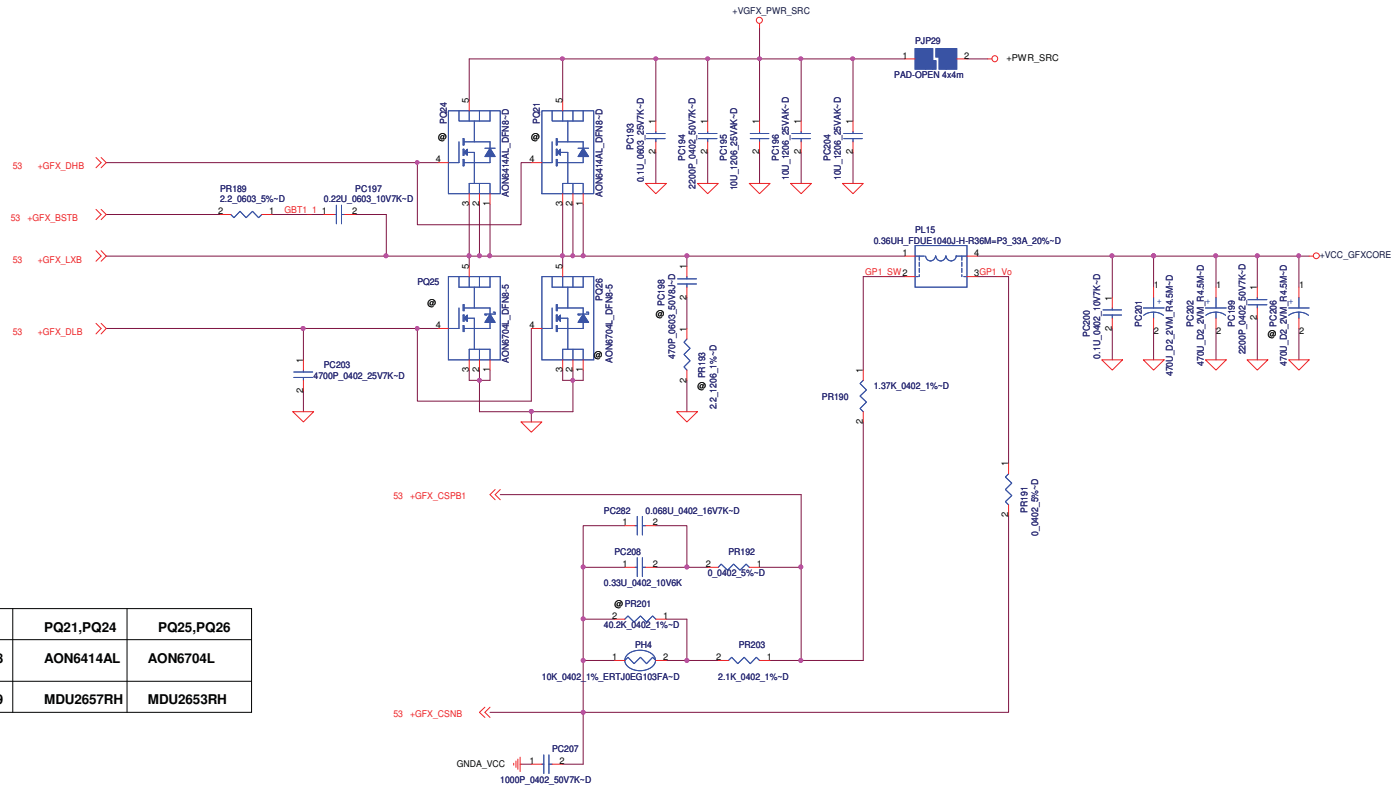

		PQ21,PQ24	PQ25,PQ26
Main	X7629631L88	AON6414AL	AON6704L
2nd	X7629631L89	MDU2657RH	MDU2653RH

DELL CONFIDENTIAL/PROPRIETARY

THIS SHEET OF ENGINEERING DRAWING IS THE PROPRIETARY PROPERTY OF COMPAL ELECTRONICS, INC. AND CONTAINS CONFIDENTIAL

Compal Electronics, Inc.

Title: ISL95870A +1.05V RUN VTT

Size | Document Number: LA-6611P | Rev: 0.1

Date: Wednesday, January 26, 2011 | Sheet 54 of 57

http://hobi-elektronika.net

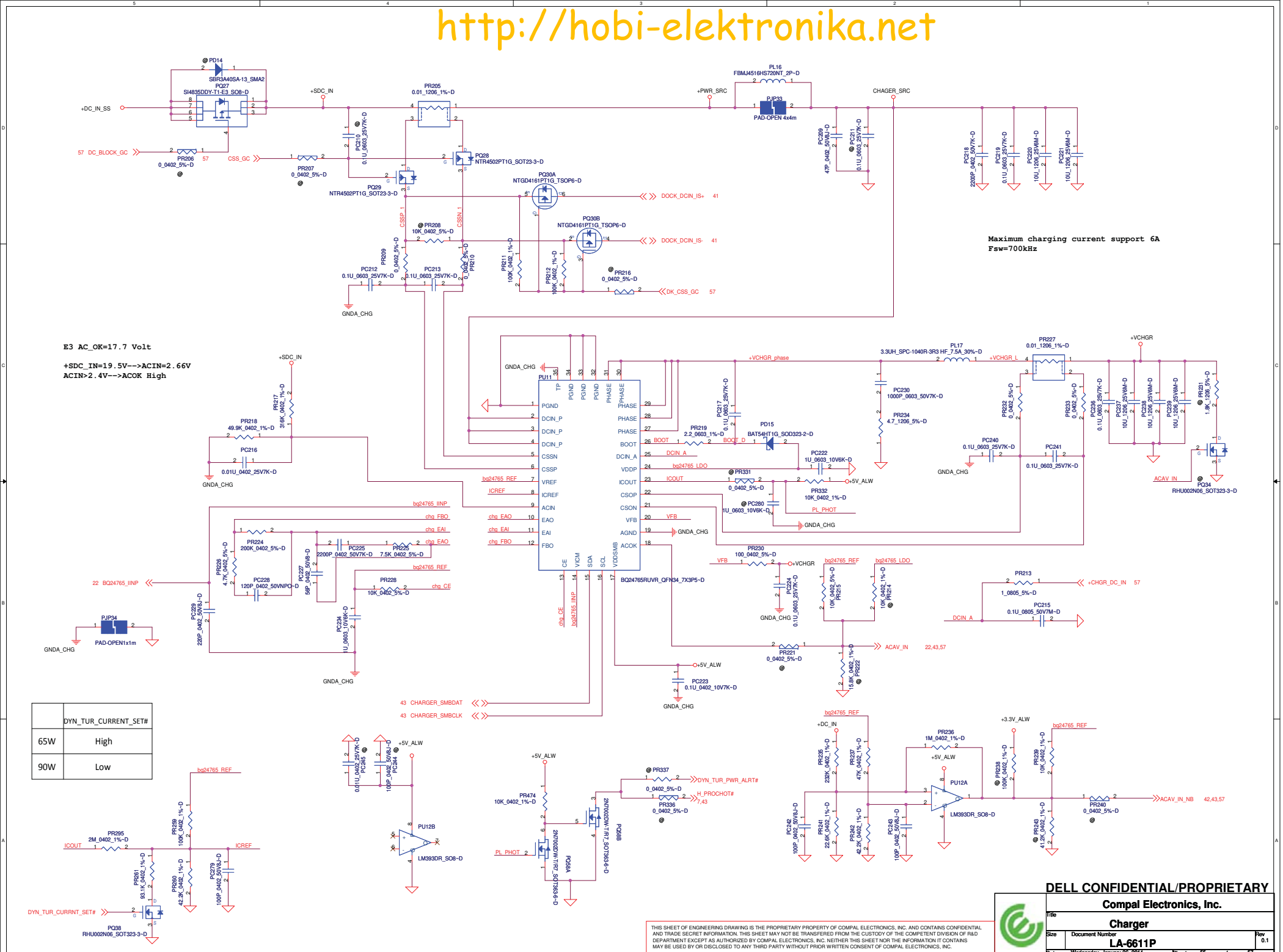

	DYN_TUR_CURRENT_SET#
65W	High
90W	Low

DELL CONFIDENTIAL/PROPRIETARY

Compal Electronics, Inc.

Title: Charger

Size | Document Number: LA-6611P | Rev: 0.1

Date: Wednesday, January 26, 2011 | Sheet 55 of 57

THIS SHEET OF ENGINEERING DRAWING IS THE PROPRIETARY PROPERTY OF COMPAL ELECTRONICS, INC. AND CONTAINS CONFIDENTIAL AND TRADE SECRET INFORMATION. THIS SHEET MAY NOT BE TRANSFERED FROM THE CUSTODY OF THE COMPETENT DIVISION OF R&D DEPARTMENT EXCEPT AS AUTHORIZED BY COMPAL ELECTRONICS, INC. NEITHER THIS SHEET NOR THE INFORMATION IT CONTAINS MAY BE USED BY OR DISCLOSED TO ANY THIRD PARTY WITHOUT PRIOR WRITTEN CONSENT OF COMPAL ELECTRONICS, INC.

http://hobi-elektronika.net

	0.9V	0.85V
VCCSA_VID_1	0	1

output voltage adjustable network

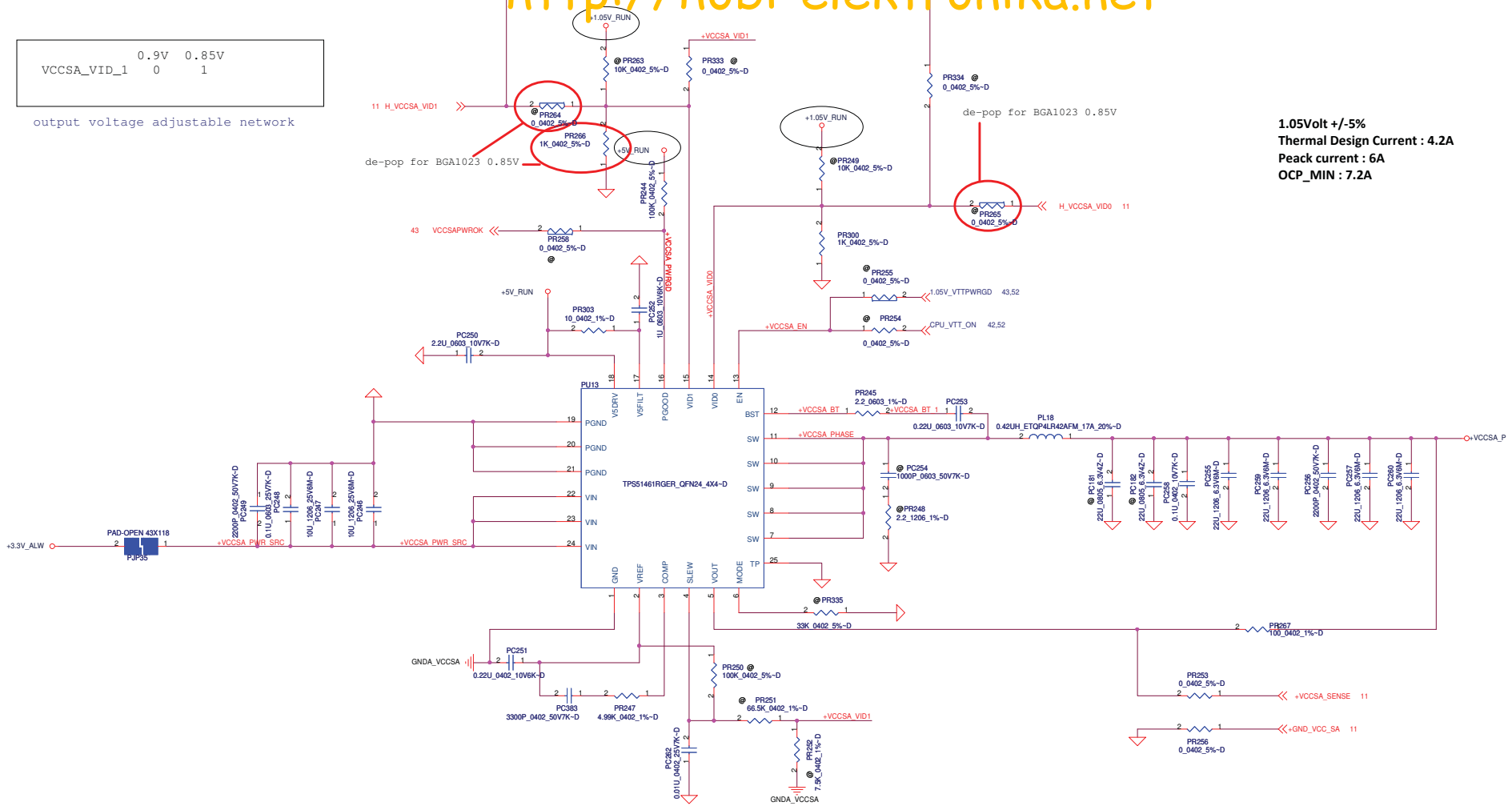

1.05Volt +/-5%
Thermal Design Current : 4.2A
Peack current : 6A
OCP_MIN : 7.2A

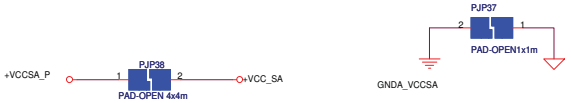

THIS SHEET OF ENGINEERING DRAWING IS THE PROPRIETARY PROPERTY OF COMPAL ELECTRONICS, INC. AND CONTAINS CONFIDENTIAL AND TRADE SECRET INFORMATION. THIS SHEET MAY NOT BE TRANSFERED FROM THE CUSTODY OF THE COMPETENT DIVISION OF R&D DEPARTMENT EXCEPT AS AUTHORIZED BY COMPAL ELECTRONICS, INC. NEITHER THIS SHEET NOR THE INFORMATION IT CONTAINS MAY BE USED BY OR DISCLOSED TO ANY THIRD PARTY WITHOUT PRIOR WRITTEN CONSENT OF COMPAL ELECTRONICS, INC.

DELL CONFIDENTIAL/PROPRIETARY

Compal Electronics, Inc.

Title	ISL95870A 0.8V_VCC_SA	
Size	Document Number: LA-6611P	Rev 0.1
Date: Wednesday, January 26, 2011	Sheet 56 of 57	

http://hobi-elektronika.net

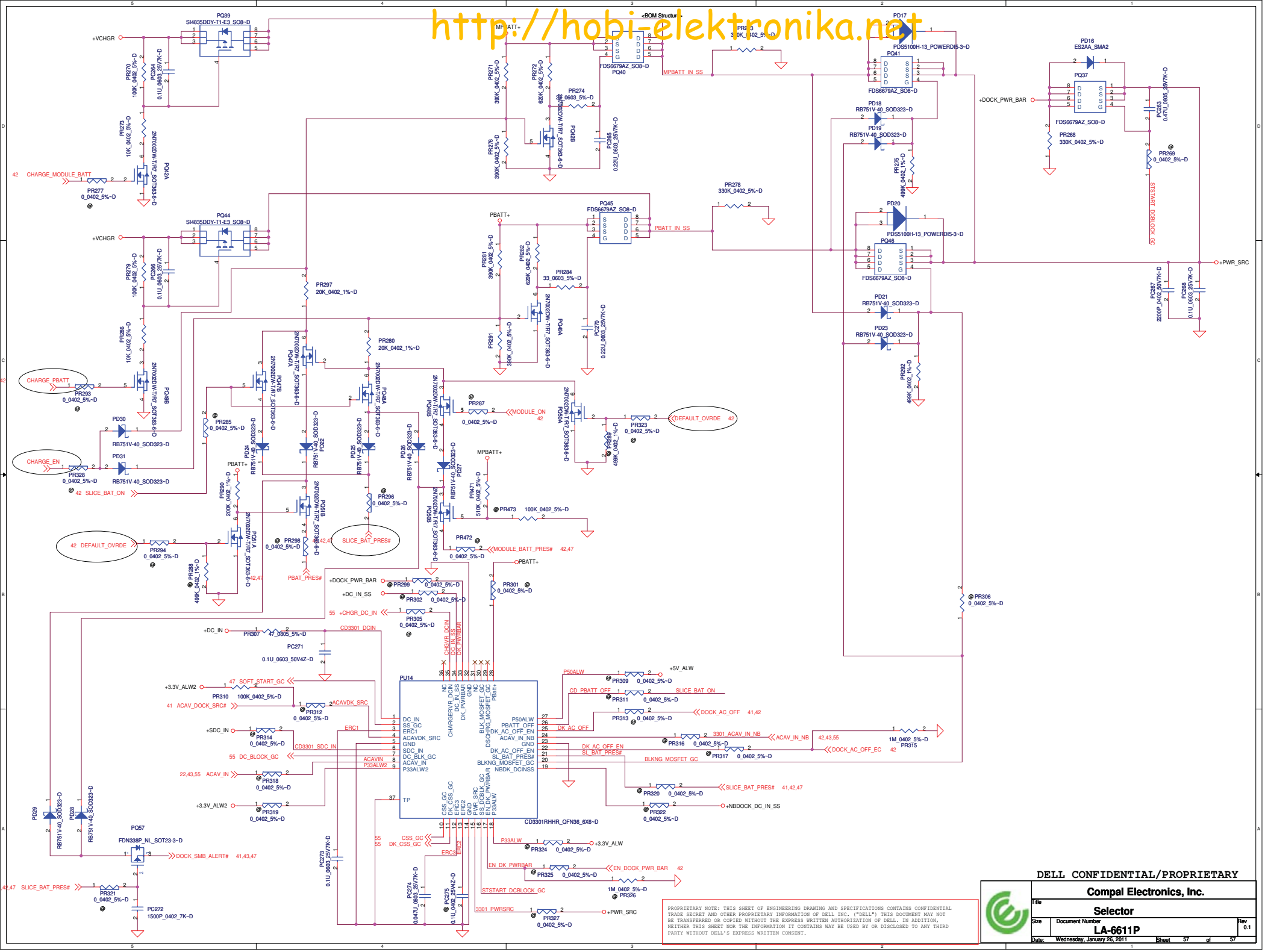

PROPRIETARY NOTE: THIS SHEET OF ENGINEERING DRAWING AND SPECIFICATIONS CONTAINS CONFIDENTIAL TRADE SECRET AND OTHER PROPRIETARY INFORMATION OF DELL INC. ("DELL"). THIS DOCUMENT MAY NOT BE TRANSFERRED OR COPIED WITHOUT THE EXPRESS WRITTEN AUTHORIZATION OF DELL. IN ADDITION, NEITHER THIS SHEET NOR THE INFORMATION IT CONTAINS MAY BE USED BY OR DISCLOSED TO ANY THIRD PARTY WITHOUT DELL'S EXPRESS WRITTEN CONSENT.

DELL CONFIDENTIAL/PROPRIETARY

Compal Electronics, Inc.

Title: Selector

Size: | Document Number: LA-6611P | Rev: 0.1

Date: Wednesday, January 26, 2011 | Sheet 57 of 57

Version Change List (P. I. R. List)

http://hobi-elektronika.net

Item	Page#	Title	Date	Request Owner	Issue Description	Solution Description	Rev.
1	~~14~~	~~HW~~	~~7/13/2010~~	~~COMPAL~~	~~Modify TAA SPI ROM topology~~	~~Add R933 0 ohm & Remove SPI_HOLD#0 and SPI_WP#0 connect to JP1~~	X01
2	11,56	HW	7/22/2010	COMPAL	Modify net name	Change +0.8V_VCC_SA to +VCC_SA	X01
3	22,25,28 32,42,43 45,11,20 37,11,	HW	7/22/2010	COMPAL	Follow PPM recommendation to change material	Change capacitors from 10uF_0805_10V_Y5V to 10uF_0805_6.3V_X5R: C305,C316,C387,C1181, C705,C728,C760,C764, C765,C768,C769,C772,CC135,CH58,CH73,CH80 Change capacitors from 10uF_0805_6.3V to 10uF_0603_6.3V: C475,C638,C641,C643 Change resistors to 0402 size: RC134, RH201,RH253,RH208,RH213 Delete RH192 and add PJP52	X01
4	14	HW	7/22/2010	COMPAL	De-pop PCH XDP	De-pop RH36,RH283,RH21,RH24,CH1,CH6	X01
5	14,29,43	HW	7/22/2010	COMPAL	Modify Module Bay circuit	Change net name ODD_DET# to PCH_SATA_MOD_EN#, r and USB_MCARD3_DET# to remove R1069,R1182,R1188,R425, Add R513,Q76,Q123B, change BAY SM bus PU rail to +3.3V_ALW	X01
6	18	HW	7/22/2010	COMPAL	Follow Intel Design Guide Rev1.0	Change RH149 to 1k and RH150 to 4.7k	X01
7	22	HW	7/22/2010	COMPAL	Change MAX8731_IINP connection	Change to VCP	X01
8	22	HW	7/22/2010	SMSC	Per SMSC request	Add R404 10K pull down of TEST1 pin	X01
9	26	HW	7/22/2010	COMPAL	For Safety request	Add D4 and R5 co-lay with F2,	X01
10	40	HW	7/22/2010	COMPAL	Change ESATA repeater	Add R1585~R1588, and change U44 to MAX4951BECTP	X01
11	30	HW	7/22/2010	COMPAL	Change codec to ZB version	Change Codec part number to SA00003ZZ1L and stuff C962	X01
12	34	HW	7/22/2010	COMPAL	Change RFID capacitors for more popular	Change C502,C505 from 1uF to 0.1uF	X01
13	24,46	HW	7/22/2010	COMPAL	Correct net name for LED signal	Modify signal name BREATH_BLUE_LED to BREATH_WHITE_LED and BREATH_BLUE_LED_SNIFF to BREATH_WHITE_LED_SNIFF	X01
14	42	HW	7/22/2010	COMPAL	Add 0 ohm resistor for SUSACK#	Add R1132 and add net name SUSACK#_EC	X01
15	32	HW	7/22/2010	INTEL	Remove useless resistors	Remove R556, R558, R559, R560 and short it.	X01
16	32,28,29 38,45	HW	7/22/2010	COMPAL	Change part for Halogen free	Change Q18,Q27,Q30,Q34,Q38,Q40,Q42,Q49,Q54,Q58 to HF part	X01
17	10	HW	7/22/2010	COMPAL	CC129~CC134 D2T LESR5M EOL	Change CC129~CC134 to SGA00004X0L	X01
18	37	HW	7/22/2010	COMPAL	Modify Module Bay circuit	De-pop C627,R712	X01
19	7	HW	7/22/2010	COMPAL	For support XDP device	De-pop RC9	X01
20	42	HW	7/22/2010	COMPAL	Base on GPIO map to modify	Change SLICE_BAT_PRES# pull up power rail from +3.3V_ALW2 to +3.3V_ALW	X01

DELL CONFIDENTIAL/PROPRIETARY

PROPRIETARY NOTE: THIS SHEET OF ENGINEERING DRAWING AND SPECIFICATIONS CONTAINS CONFIDENTIAL TRADE SECRET AND OTHER PROPRIETARY INFORMATION OF DELL INC. ("DELL") THIS DOCUMENT MAY NOT BE TRANSFERRED OR COPIED WITHOUT THE EXPRESS WRITTEN AUTHORIZATION OF DELL. IN ADDITION, NEITHER THIS SHEET NOR THE INFORMATION IT CONTAINS WAY BE USED BY OR DISCLOSED TO ANY THIRD PARTY WITHOUT DELL'S EXPRESS WRITTEN CONSENT.

Version Change List (P. I. R. List)

http://hobi-elektronika.net

Item	Page#	Title	Date	Request Owner	Issue Description	Solution Description	Rev.
21	43	HW	7/22/2010	COMPAL	Base on GPIO map to modify	Add R889 for CPU1.5V_S3_GATE pull down	X01
22	15,18	HW	7/22/2010	COMPAL	Base on GPIO map to modify	Remove RH238,RH172 and change connection form SLP_ME_CSW_DEV# from GPIO45 to GPIO28	X01
23	24	HW	7/22/2010	COMPAL	PWM function	Remove R1139,R1140 and add D68,D69, pop R1137	X01
24	37,46	HW	7/22/2010	COMPAL	Modify LED circuit	Remove R1578,R1579,R1580,D42,D60,D61, add Q77,Q124,R705,R718,R719	X01
25	15,32	HW	7/22/2010	COMPAL	EOL concern	Change Y3 and YH2 from 1Y725000CE1A to 7A25000110	X01
26	24,27,46	HW	7/22/2010	COMPAL	Change part for Halogen free part	Change QC5 to NTR4501NT1G, U21,U24,U54,U55,U57 change to NC7SZ04P5X-G, Q21 change to FDC654P-G	X01
27	36	HW	7/22/2010	O2-Mirco	Add discharge circuit for +3.3V_RUN_CARD	Add R826 on +3.3V_RUN_CARD	X01
28	31,42,46	HW	7/22/2010	COMPAL	Remove mute function and LED	Remove R1109,Q119,Q105,Q102,R1059,R1061	X01
29	17,18,43	HW HW	7/22/2010 7/22/2010	COMPAL COMPAL	To solve back drive issue	Remove USB_OC7# signal and RH254, change connection from PCH GPIO1 to GPIO14,and change RH164 pull up power rail from +3.3V_RUN to +3.3V_ALW_PCH	X01
30	18	HW	7/22/2010	COMPAL	Add pull up for PCH GPIO1	Change RH254 to 10K and pull high to +3.3V_RUN	X01
31	29,45	HW	7/22/2010	COMPAL	For cost saving	Add PJP63,RH202, no stuff QH4,Q49,RH278,R908	X01
32	42	HW	7/22/2010	COMPAL	Follow GPIO 0720	Add DYN_TUR_PWR_ALRT# up power rail and change R796 pull from +3.3V_RUN to +3.3V_ALW	X01
33	43	HW	7/22/2010	COMPAL	Follow GPIO 0720	Add DYN_TUR_CURRNT_SET# up power rail and change R837 pull from +3.3V_RUN to +3.3V_ALW	X01
34	28,46	HW	7/22/2010	COMPAL	Part leverage select	Change D16,D59,D62 to SC100000S0L	X01
35	14	HW	7/22/2010	COMPAL	Follow Intel XDP design guide	Change RH43,RH44,RH45 to 200 ohm	X01
36	24,40	HW	7/22/2010	INTEL	Change material for small size	Change C300,C669 from 1206 16V to 0805 10V	X01
37	39,40	HW	7/22/2010	COMPAL	Remove useless capacitors	Remove C1151~C1154	X01
38	37	HW	7/22/2010	COMPAL	Add 0 ohm R on PCIE_MCARD2_DET#	Add R725	X01
39	43	HW	7/22/2010	COMPAL	Follow GPIO MAP 0720	Add R1578 for XFR.	X01
40	42	HW	7/22/2010	COMPAL	Add 0 ohm for TEMP_ALERT#	Add R773	X01
41	44	HW	7/22/2010	COMPAL	Solution +1.5V_RUN voltage drop issue	Change Q59 from SI3456BDV to NTGS4141NT1G	X01
42	46	HW	7/27/2010	COMPAL	Add pull down 100k on BT_ACTIVE	Add R959	

DELL CONFIDENTIAL/PROPRIETARY

PROPRIETARY NOTE: THIS SHEET OF ENGINEERING DRAWING AND SPECIFICATIONS CONTAINS CONFIDENTIAL TRADE SECRET AND OTHER PROPRIETARY INFORMATION OF DELL INC. ("DELL") THIS DOCUMENT MAY NOT BE TRANSFERRED OR COPIED WITHOUT THE EXPRESS WRITTEN AUTHORIZATION OF DELL. IN ADDITION, NEITHER THIS SHEET NOR THE INFORMATION IT CONTAINS WAY BE USED BY OR DISCLOSED TO ANY THIRD PARTY WITHOUT DELL'S EXPRESS WRITTEN CONSENT.

Version Change List (P. I. R. List)

http://hobi-elektronika.net

Item	Page#	Title	Date	Request Owner	Issue Description	Solution Description	Rev.
44	40	HW	7/27/2010	COMPAL	Follow Vender request.	R1589~R1592	X01
45	43	HW	7/27/2010	COMPAL	BID change	Change R875 to 130K	X01
45	22	HW	7/27/2010	COMPAL	Chnage thermal diode connection	Remove C268	X01
46	18,30	HW	7/28/2010	COMPAL	Remove SPEAKER_DET# PAID.	Chnage SPEAKER_DET# to GPIO17, and change speaker connector to SP02000H900	X01
47	14,47	HW	7/28/2010	COMPAL	Remove RTC_DET# PAID.	Remove RH31, add T132	X01
48	22	HW	7/28/2010	COMPAL	Follow connector list	change FAN connector to SP02000TI00	X01
49	33	HW	7/28/2010	COMPAL	Follow connector list	Re-link RJ45 symbol	X01
50	44	HW	7/28/2010	COMPAL	Follow connector list	Chnage keyboard connector to pitch 1	X01
51	34	HW	7/28/2010	COMPAL	Remove Broadcom debug connector	Remove JBRCM1 and add R666 no stuff	X01
52	47	HW	7/28/2010	COMPAL	Change RTC connector	Change to TYCO_2-1775293-2	X01
53	43	HW	08/05/2010	COMPAL	Change signal net name	Change 0.8V_VCCPWROK net name to VCCSAPWROK	X01
54	30	HW	08/13/2010	COMPAL	Fix Speaker EMI issue	Change R1183~R1186 to L78~L81 pop C973~C976,C267,C283 and C284	X01
55	39,40	HW	08/13/2010	COMPAL	Fix USB EMI issue	pop L50,L52,depop R737,R739,R734,R735	X01
56	29	HW	08/13/2010	COMPAL	Change ODD repeater	Chnage ODD repesater to MAX4951B and R1174,R1176,R1169,R1171 to 0 ohm	X01
57	43	HW	08/13/2010	COMPAL	EOL concern	Change Y6 to SJ132P7KW1L same as YH1	X01
58	22	HW	08/13/2010	COMPAL	Change FAN conn type for ME request	change FAN connector to SP02000CB0L	X01
59	14	HW	08/13/2010	COMPAL	Change TAA topology	redefine JP1 TAA pin define	X01
60	10	HW	08/16/2010	COMPAL	Follow PPDG1.2 Vcore 2.2uf 0402 QTY from 55 to 35 pcs	remove CC199,CC103,CC120,CC142,CC141,CC171,CC139,CC134,CC133,CC200 CC101,CC128,CC153,CC102,CC126,CC105 16pcs depop 4 pcs CC152,CC121,CC127 and CC160	X01
61	18	HW	08/16/2010	COMPAL	Follow INTEL DG DF_TVS pull high value	Change RH150 to 0 ohm RH149 to 2.2K ohm	X01
62	14 15 43	HW	08/16/2010	COMPAL	Crystal EA	Change C743=39pF CH2,CH3=15pF CH18,CH19=10pF and YH2 to SJ100008E0L	X01
63	22	HW	08/17/2010	COMPAL	reserve cap for CPU remote diode	Add C286	X01
64	14	HW	08/17/2010	COMPAL	reserve Resistance and Cap for SPI EA	Add CH107,CH108,R935	

DELL CONFIDENTIAL/PROPRIETARY

PROPRIETARY NOTE: THIS SHEET OF ENGINEERING DRAWING AND SPECIFICATIONS CONTAINS CONFIDENTIAL TRADE SECRET AND OTHER PROPRIETARY INFORMATION OF DELL INC. ("DELL") THIS DOCUMENT MAY NOT BE TRANSFERRED OR COPIED WITHOUT THE EXPRESS WRITTEN AUTHORIZATION OF DELL. IN ADDITION, NEITHER THIS SHEET NOR THE INFORMATION IT CONTAINS WAY BE USED BY OR DISCLOSED TO ANY THIRD PARTY WITHOUT DELL'S EXPRESS WRITTEN CONSENT.

Version Change List (P. I. R. List)

http://hobi-elektronika.net

Item	Page#	Title	Date	Request Owner	Issue Description	Solution Description	Rev.
65	34	HW	8/20/2010	COMPAL	BRCM request RFID filter need have 400mA max	Change L39 and L40 to SHI0000CH0L.Reserve L45,L46 colay	X01
66	14	HW	8/23/2010	COMPAL	Improve SPI EA for SPI_CLK	Change R899 and R897 to 56 ohm	X01
67	30	HW	8/23/2010	COMPAL	Follow connector list	Change Speaker CONN to SP021007221	X01
68	42	HW	8/24/2010	COMPAL	RF noise	pop R794 R795 to 10 ohm,C712 C713 to 10p	X01
69	14	HW	8/25/2010	COMPAL	Improve SPI power path	Always pop C745	X01
70	36	HW	8/25/2010	COMPAL	O2 recommend add cap for +PE_VDDH	add C559 0.1uF C560 0.01uF	X01
71	14 18	HW	8/26/2010	COMPAL	Follow INTEL DPDG	reserve RH31,RH355 for GPIO19/GPIO28	X01
72	14	HW	8/27/2010	COMPAL	remove double reserve cap for BIT_CLK	remove CH100	X01
73	16	HW	8/27/2010	COMPAL	reserve ME_SUS_PWR_ACK pull down	reserve RH145	X01
74	26	HW	8/27/2010	COMPAL	Follow INTEL HDMI DG	remove R1164,R458,R1128-->20K add R1593 depop D65	X01
75	11	HW	8/30/2010	COMPAL	Change QC5 VGS to 20V part	Change QC5 to SB00000HK0L	X01
76	37	HW	9/1/2010	COMPAL	Depop SIM card ESD diode	Depop U40	X01
77	24	HW	10/6/2010	COMPAL	Change RB751V to HF part	Change D63,D64,D68,D69 to SCS00004L0L	X02
78	24	HW	10/6/2010	COMPAL	AUO panel can't adjust brightness	Change R1137 from 100k to 10k	X02
79	14,18	HW	10/6/2010	Intel	Follow DG1.5 and schematic check list rev1	Add RH41,depop RC96 and RC97,change RH177 to 10K	X02
80	30,31	HW	10/6/2010	IDT	To solve pop noise and detect issue	Add U6,Q33,Q46,D70,D71,R425,R33,R38,R430,R352,R1088,C967,C307,C308,R161	X02
81	32,42	HW	10/11/2010	COMPAL	LOM Cable Detect function	add U15, C478 change TP_DET# netname to WLAN_LAN_DISB# JTP1 pin1 change to GND	X02
82	42	HW	10/11/2010	COMPAL	Change Board ID to X02	Change R875 to 62K	X02
83	17	HW	10/11/2010	Intel	Follow Intel check list rev1.2	Add @RH332	X02
84	46	HW	10/11/2010	COMPAL	LED brightness test result	Change R957 to 560,R941,R939,R934 to 4.7k,R955,R949 to 2K	X02
85	24, 30	HW	10/19/2010	EMI	EMI issue for PWM and DMIC_CLK	Add L83,change R1582 to L82	X02
86	30	HW	10/19/2010	COMPAL	Change Codec rev to YA	Change U72 to SA00003ZZ2L	X02
87	32	HW	10/19/2010	COMPAL	Change LAN stepping to C0	Change U31 to SA00003SI2L	X02
88	39,40	HW	10/19/2010	ESD	PT ESD test result	Change U91,U92 to D72,D73. Pop D73	X02
89	24	HW	10/19/2010	Compal	PT ESD test result	remove D7,D8,DE1~DE4	X02

DELL CONFIDENTIAL/PROPRIETARY

PROPRIETARY NOTE: THIS SHEET OF ENGINEERING DRAWING AND SPECIFICATIONS CONTAINS CONFIDENTIAL TRADE SECRET AND OTHER PROPRIETARY INFORMATION OF DELL INC. ("DELL") THIS DOCUMENT MAY NOT BE TRANSFERRED OR COPIED WITHOUT THE EXPRESS WRITTEN AUTHORIZATION OF DELL. IN ADDITION, NEITHER THIS SHEET NOR THE INFORMATION IT CONTAINS WAY BE USED BY OR DISCLOSED TO ANY THIRD PARTY WITHOUT DELL'S EXPRESS WRITTEN CONSENT.

Version Change List (P. I. R. List)

http://hobi-elektronika.net

Item	Page#	Title	Date	Request Owner	Issue Description	Solution Description	Rev.
90	32	HW	10/19/2010	COMPAL	IEEE test result	Change L30~L37 to 12nH	X02
91	28	HW	10/19/2010	COMPAL	Support SSD hard drive	Add PJP64,C399,C402	X02
92	31,43	HW	10/19/2010	COMPAL	Non-support Latitude on	depop SW2,C740,R877	X02
93	22	HW	10/19/2010	COMPAL	Change OTP set to 91 degree	Change R406 to 1.15k	X02
94	26	HW	10/20/2010	COMPAL	HDMI SDVO CTRL PU same as 14"	del D65,R1593	X02
95	30,42	HW	10/20/2010	COMPAL	GPIO map change AUD_NB_MUTE to AUD_NB_MUTE#	change AUD_NB_MUTE to AUD_NB_MUTE#	X02
96	14	HW	10/26/2010	COMPAL	Follow Intel CRB FAB2 PCH XDP schematic	Add @RH284	X02
97	41	HW	11/1/2010	COMPAL	EMI dock clk issue	pop R756=33ohm C704=12pf	X02
98	18	HW	11/1/2010	COMPAL	Follow schmaitc check list	depop RH174 RH175	X02
99	14	HW	11/8/2010	COMPAL	For easy control TAA/nonTAA BOM	Add R936 colay R895,R944 colay R897,R943 colay R900	X02
100	15	HW	11/8/2010	COMPAL	DF416400 AMT_Run MEflow Stress test fai	depop RH296 RH297,pop QH5 RH302,RH303	X02
101	25	HW	11/10/2010	COMPAL	Pericom VGA SW high EOS failure rate	Change C321,C318 from 0.1uF to 0.01uF(pin4,pin23)	X02
102	6-11,14-21	HW	11/10/2010	COMPAL	Change CPU PCH PN to QS sample	Change UH4 PN to SA00004IW1L ,U1 PN to SA00004EL1L	X02
103	46	HW	11/10/2010	ME	Change KB screw hole	Change H12 H13 from 2.3 to 2.6	X02
104	22	HW	11/10/2010	COMPAL	Thermal request change OTP set to 94 degree	Change R406 to 1.4k	X02
105	28	HW	11/18/2010	COMPAL	Follow Intel CRB SMBUS PU value	Change R501 R502 from 2.2k to 10k	X02
106	28,45	HW	11/19/2010	COMPAL	For cost saving(+5V_HDD / +3.3V_ALW_PCH)	De-pop R499,R500,C393,Q28,R905,R907,C762,Q51	X02
107	17,39	HW	12/23/2010	COMPAL	SW WHQL request USB debug need USB port1	Change USB port0 to port1	A00
108	43	HW	12/27/2010	COMPAL	Change Board ID to A00	Change R875 to 33k	A00
109	43	HW	12/27/2010	COMPAL	To solve backdrive issue	Pop Q45	A00
200	34-35	HW	12/27/2010	COMPAL	Change USH chip to CID7	Change U33 to SA00003AO2L	A00
201	30-31	HW	1/3/2011	COMPAL	remove MIC external detect	del U6,Q33,Q46,D70,D71,R425,R33,R38,R430,R352,R1088,C967,C307,C308,R161	A00
202	14	HW	1/5/2011	COMPAL	For cost saving	De-pop RH47,RH48,RH49,RH288	A00
203	22	HW	1/18/2011	COMPAL	Same as 14	Change R385 to 10K	A00
204	44	HW	1/21/2011	COMPAL	DF445509:TP will malfunction intermittently.	Change R902 to 2.2K	A00

DELL CONFIDENTIAL/PROPRIETARY

PROPRIETARY NOTE: THIS SHEET OF ENGINEERING DRAWING AND SPECIFICATIONS CONTAINS CONFIDENTIAL TRADE SECRET AND OTHER PROPRIETARY INFORMATION OF DELL INC. ("DELL") THIS DOCUMENT MAY NOT BE TRANSFERRED OR COPIED WITHOUT THE EXPRESS WRITTEN AUTHORIZATION OF DELL. IN ADDITION, NEITHER THIS SHEET NOR THE INFORMATION IT CONTAINS WAY BE USED BY OR DISCLOSED TO ANY THIRD PARTY WITHOUT DELL'S EXPRESS WRITTEN CONSENT.

Version Change List (P. I. R. List)

http://hobi-elektronika.net

Item	Page#	Title	Date	Request Owner	Issue Description	Solution Description	Rev.
1	47	+DCIN	7/15	Compal	System can't recognize battery issue	Change PBATT2 Pin2 connection from Z4304 to Z5304 Change PBATT2 Pin2 connection from Z4305 to Z5305 Change PBATT2 Pin2 connection from Z4306 to Z5306	
2	47	+DCIN	7/15	Compal	System can't recognize battery issue	Change PR77 pin2 connection from BAY_SMBCLK to BAY_SMBDAT	
3	55	Charger	7/15	Compal	System can't recognize battery issue	Change PU11 pin 15 connection from CHARGER_SMBCLK to CHARGER_SMBDAT Change PU11 pin 16 connection from CHARGER_SMBDAT to CHARGER_SMBCLK	
4	47	+DCIN	8/4	Compal	Follow Macallan 14 for new battery cell	Change PL1 from SM01002078L to SM010009C8L and add PL20 Change PL19 from SM01002078L to SM010009C8L	
5	48	3/5V	8/4	Compal	Follow Macallan 14	Change PC24 from 4.7u/6.3V/0805 (SE093475K8L) to 4.7u/6.3V/0603 (SE107475K8L)	
6	47	+DCIN	8/4	Compal	RTC remove detect function (7/29 EE mail)	Delete JRTC1 pin2 RTC_DET# connection	
7	56	+VCC_SA	8/4	Compal	Follow Macallan 14 VCCSA not fix at 0.8V. change net name from +0.8V_VCC_SA to +VCC_SA	Change +0.8V_VCC net name to +VCCSA_P Change 0.8V_VCCPWROK net name to VCCSAPWROK	
8	55	Charger	8/4	Compal	Follow Macallan 14	Depop PD14 SBR3A40SA (SC100003J00)	
9	57	Selector	8/4	Compal	Follow Macallan 14 Leakage issue on PD16	Change PD16 from SBR3A40SA (SC100003J00) to ES2AA (SC100005A0L)	
10	55	Charger	8/4	Compal	Follow Macallan 14 Add adapter protection circuit for turbo mode	Add PU11 pin8 connection ICREF Add PU11 pin23 connection ICOUT Add PR259,PR260,PR261,PR295, PR331,PR332 Add PC279,PC280 Add PQ38	
11	56	VCCSA	8/18	Intel	Intel change BGA1023 VID table VID0 0 VID1 1 voltage from 0.8V to 0.85V	Change VID setting	
12	53,54	Vcore, VGFX	8/18	Maxim	Reserve 0402 cap pad for transient fine tune	Add PC281 and PC282 0402 cap location	
13	53,54	Vcore, VGFX	8/18	Maxim	change setting for Pass2 sample	Change PR330 from 2_ohm to 0_ohm Change PR127 from 150K_ohm to 165K_ohm Change PR135 from 100K_ohm to 105K_ohm Change PR157 from 8.66K_ohm to 10.2K_ohm Change PR190 from 1.43K_ohm to 1.37K_ohm Change PR192 from 2_ohm to 0_ohm de-pop PR201 Change PR110 PR112 PR115 from 12.7K_ohm to 13.3K_ohm	
14	53,54	Vcore, VGFX	8/18	Compal	Change PQ9 PQ10 PQ11 to prevent COS issue	Change PQ9 form CSD86350Q5D to PQ9 AON6414AL + PQ10 AON6704L Change PQ10 form CSD86350Q5D to PQ11 AON6414AL + PQ15 AON6704L Change PQ11 form CSD86350Q5D to PQ3 AON6414AL + PQ14 AON6704L	
15	56	VCCSA	8/23	TI	Change Thermal pad to PGND	Change PU13 pin 25 from GNDA_VCCSA to PGND	
16	56	VCCSA	8/23	TI	For batter output voltage accuracy	Add PC383 from PR247 pin2 to PU13 pin2	
17	55	Charger	8/24	Dell	Add turbo mode adapter protection by H_PROCHOT#	Add PR336 PR337 for pop opton to select H_PROCHOT# or DYN_TUR_PWR_ALRT#	

Version Change List (P. I. R. List)

http://hobi-elektronika.net

Item	Page#	Title	Date	Request Owner	Issue Description	Solution Description	Rev.
18	50	+0.75_DDR_VT/ +1.8V_RUN	8/26	TI	for more phase margin	Change PC71 from 1800pF to 18nF	
19	47	+DCIN	9/1	Dell	reduce leakage current	Change PR2 PR108 from 10K_ohm to 100K_ohm	
20	56	VCCSA	9/1	Intel	Intel update VCCSA voltage change only for UL ULV type. our project is SV type hence keep no change	de-pop PR250 PR251 PR252 PR333 PR334 PR335 pop PR264 PR265 PR266 PR300	
21	51	1.05V_M	10/20	Compal	22u/1206/6.3V COS issue	Change PC98~PC105 from 22u/1206 (SE077226M8L) to 22u/0805 (SE00000110L)	
22	52	1.05V_RUN_VTT	10/20	Compal	22u/1206/6.3V COS issue	Change PC120~PC127 PC129 PC130 from 22u/1206 (SE077226M8L) to 22u/0805 (SE00000110L)	
23	51	1.05V_M	10/20	TI	TI IC OCP setting value change (as PT memo)	Change PR83 from SD03457628L 57.6K_ohm 0402 to SD03410028L 10K_ohm 0402	
24	53	Vcore	11/05	Maxim	Initial voltage accurate	PR110 PR112 PR115 change from 13.3K_ohm to 12.7K_ohm PR109 change from 6.49K_ohm to 5.9K_ohm	
25	53	Vcore	11/05	Maxim	Load line modify Transient compensation	PR140 change from 9.76K_ohm to 8.45K_ohm PC281 pop 10n	
26	53,54	Vcore,VGFX	11/05	Maxim	Load line modify Transient compensation	PR157 change form 10.2K_ohm to 7.5K_ohm PC282 pop 68nF	
27	57	Selector	11/10	Compal	Fine tune main and media battery switching to slice battery transient time (follow 14")	Change PC270 and PC265 from 1uF (SE00000698L) to 0.22uF (SE000005Z8L)	
28	55	Charger	11/10	Compal	Change adapter protection circuit trip point. (Adapter rated current + 0.75A) (follow 14")	Change PR295 from 1.87M (SD00000WN0L) to 649K (SD03464938L) Change PR261 from 73.2K (SD00000B18L) to 95.3k (SD03495328L)	
29	55	Charger	11/10	Compal	Change adapter protection event to HW from SW	Pop PR336 De-pop PR332 PR337	

Title	<Title>	
Size C	Document Number <Doc>	Rev 0.3
Date: Wednesday, January 26, 2011	Sheet 64 of 64	