11-20-2002_22:37

REVISIONS				
REV	ECO	DESCRIPTION	DATE	APPROVED
A00-00	136999	Start Schematics	11/15/02	CJ_WANG

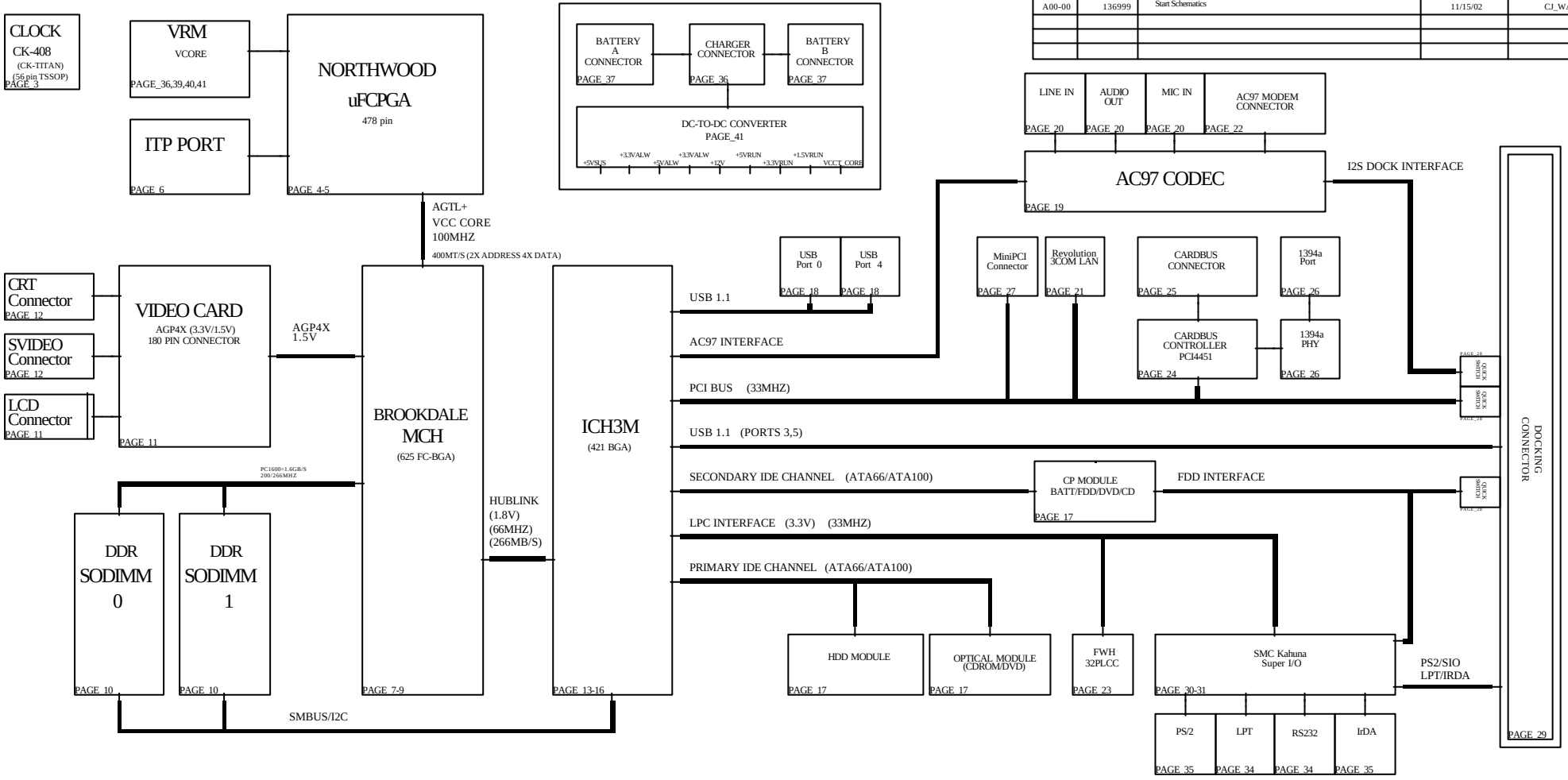

PARTS

ASSY,PWA,MN,NV28,M50 (9Y422)
- PWA,PLN,MN,NV28,M50 (9Y422)
  - ASSEMBLY BARCODE LABEL (XXXXX)
  - ASSEMBLY REVISION LABEL (XXXXX)
  - ASSY DWG,PLN,MN,NV28,M50 (XXXXX)
  - PWB,PLN,MN,CABN (1Y802)
  - SCHEM,PLN,MN,NV28,M50 (C0370)

BOM ADDS APPEAR ON PAGE 42.

- This design requires a font mapping of Fixed to scaleable Arial with a scaling factor of 1.0
- Please remember when copying project files that you must include both the symbols and the schematics

EXPORT RESTRICTION:
THE EXPORT OF THE INFORMATION, SCHEMATICS AND OTHER TECHNICAL DATA CONTAINED IN THIS DOCUMENT IS CONTROLLED BY THE U.S. GOVERNMENT. THE EXPORT, DEEMED EXPORT OR OTHER TRANSFER OF THIS DATA TO CERTAIN COUNTRIES AND INDIVIDUALS IS RESTRICTED. ANY TRANSFER, EXPORT OR REEXPORT, MUST BE IN COMPLIANCE WITH THE U.S. EXPORT ADMINISTRATION REGULATIONS.

M50 A00

PROPRIETARY NOTE

THIS ITEM IS THE PROPERTY OF DELL COMPUTER CORP. AUSTIN, TEXAS AND CONTAINS CONFIDENTIAL AND TRADE SECRET INFORMATION. THIS ITEM MAY NOT BE TRANSFERRED FROM THE CUSTODY OF DELL COMPUTER CORP., EXCEPT AS AUTHORIZED BY DELL COMPUTER CORP., AND THEN ONLY BY WAY OF LOAN FOR LIMITED PURPOSES. IT MUST NOT BE REPRODUCED IN WHOLE OR IN PART AND MUST BE RETURNED TO DELL COMPUTER CORP. UPON REQUEST AND IN ALL EVENTS UPON COMPLETION OF THE PURPOSE OF THE LOAN. NEITHER THIS ITEM NOR THE INFORMATION IT CONTAINS MAY BE USED BY OR DISCLOSED TO PERSONS NOT HAVING A NEED FOR SUCH USE OR DISCLOSURE CONSISTENT WITH THE PURPOSE OF THE LOAN WITHOUT THE PRIOR WRITTEN CONSENT OF DELL COMPUTER CORPORATION.

DRAWN	
DESIGNED	
CHECKED	
APPROVED	
APPROVED	
APPROVED	
APPROVED	
RELEASED	

A CURRENT ISSUE OF THIS DRAWING MUST INCLUDE A COPY OF THE FOLLOWING ECO'S:
ECO DATE
ECO DATE
ECO DATE
ECO DATE
ECO DATE
ECO DATE
ECO DATE
ECO DATE

DELL COMPUTER CORPORATION
AUSTIN,TEXAS

TITLE: SCHEMATIC, M/B LA-1221

DWG NO. 40I195 REV. 4A

DATE: 11/15/02 SHEET 52 OF 102

NEEDS TO BE UPDATED

PAGE INDEX

1. Schematic Block Diagram
2. Index
3. System Clock, SMBUS Selector
4-5. CPU
6. CPU Voltage ID, CPU Temperature Sensor, ITP Debug Connector
7-9. GMCH
10. SODIMM Connectors
11-12. Video Connectors
13-16. ICH
17. CDROM, IDE Connectors
18. USB Hub
19. Audio Codec
20. Audio Connectors, Audio Amplifiers
21. 3COM Revolution (LAN On Motherboard)
22. LAN and Modem Connectors
23. Firmware Hub
24. Cardbus Controller
25. Cardbus Connector
26. IEEE1394 PHY
27. MiniPCI Connector
28. Dock Buffers
29. Dock Connector
30-31. Super I/O Controller (Kahuna)
32. Keyboard/Touchpad Connectors
33. Fan Controllers and Tachometers
34. Parallel and Serial Ports
35. PS2 Connectors, LED Connector, Power Sequencing Logic
36. DC-IN Connector, Charger Board Connector
37. Battery Connectors, NiMH Support
38. Power Plane Enables
39. 1.8V/1.5V Switcher and Sequencer, RTC Power Source
40. VCORE
41. DC to DC Converter
42. Mounting Holes and EMI Clips
43. Schematic Change List
44. Power Rail Diagram
45. SMBUS Diagram
46-50. REFDES Page Index

POWER MODES

Power Mode	Voltage	Page	Source	ON	OFF
RBAT	7.2V	32, 36		Always	
PBATT+	17V-13V	36, 37, CB-3		Always	
SBATT+	17V-13V	36, 37, CB-3		Always	
DOCK_DC_IN	20V	29, 36		Always	
DC_IN	20V	29, 36, CB-2, 3		Always	
SDC_IN	20V	CB-2, 3		Always	
V_CHG	15V-17.5V	CB-2		Note 1	
PWR_SRC	7.2V-20V	8, 11, 29, 36, 38, 39, 40, 41		Always	
RTCSRC	7.2V-20V	36, 39	For source power on all rails, See page 44	Always	
3VSUS	3.3V	4, 6, 10-16, 18, 21-25, 27, 30-31, 35, 38-41		S1-S3	S4-S5
RTC_PWR	5V	36, 38, 39, 41, 42		Always	
5VSUS	5V	8, 11, 16, 18-19, 22, 25, 29, 33-35, 38-42		S1-S3	S4-S5
2.5VSUS	2.5V	8-10, 39		S1-S3	S4-S5
VCC_CORE	0.6V-1.75V	4,5-9, 16, 23, 38,40		S1-S2	S3-S5
12V	12V	3, 11, 25, 29, 33, 36, 38, 41		S1-S2	S3-S5
DOCK_PWR_SRC	13V-20V	29		Docked ALW	
3VRUN	3.3V	3, 4, 6, 11, 13-14, 16-17, 19, 21-23, 26-28, 30-31, 33, 35, 38		S1-S2	S3-S5
VAUX	3.3V	27		Note 2	Note 2
1.8VSUS	1.8V	16, 38-39		S1-S3	S4-S5
1.8VRUN	1.8V	7, 8, 9, 13,16, 38		S1-S2	S3-S5
5VRUN	5V	6, 11-12, 16-17, 20, 27-28, 30, 32-35, 38, 42		S1-S2	S3-S5
5VHDD	5V	17, 38		S1-S2	S3-S5
5VMOD	5V	17, 38		S1-S2	S3-S5
1.5VRUN	1.5V	7, 9, 11, 38-39		S1-S2	S3-S5
STRB-_5V	5V	29, 34, 38		S1-S2	S3-S5
VREFCG	0.7V	11		S1-S2	S3-S5
V_1P25V_DDR_VTT	1.25V	8, 10, 11, 38, 39		S1-S2	S3-S5
CRT_VCC	5V	12		S1-S2	S3-S5
5V_QDOCK	5V	28, 30		S1-S2	S3-S5
5VFDDPP	5V	17, 31, 38		S1-S2	S3-S5
5VSUS_DOCKED	5V	29		Docked S1-S3	Docked S4-S5
USB_PWR_0/4	5V	18		S1-S2	S3-S5
VDDA	4.65V	19, 20		S1-S2	S3-S5
VDDA2	2.2V	19, 20		S1-S2	S3-S5
1.2V_VCCVID	1.2V	4, 40		S1-S3	S4-S5
5VALW	5V	11, 29, 30-32, 35-37, 39, 41		Note 4	Note 4
3.3VRTC	3.3V	16, 31, 36, 39, 41		Always	
3VALW	3.3V	6, 17, 30-32, 35, 36, 39, 41		Note 4	Note 4
VCC_RTC	3.3V	14, 16		Always	
ICH_VBIAS	3.3V	14, 16		S1-S2	S3-S5
3VPHYD	3.3V	26		S1-S2	S3-S5
3VPHYA	3.3V	26		S1-S2	S3-S5
CK_VDD_MAIN	3.3V	3		S1-S2	S3-S5
CK_VDD_CORE	3.3V	3		S1-S2	S3-S5
V_3P3_LAN	3.3V	21, 22		S1-S3	S4-S5
V_3P3_LAN_VDDTX	3.3V	21		S1-S3	S4-S5
V_3P3_LAN_VDDRX	3.3V	21		S1-S3	S4-S5
V_MCH_GTLREF	0.67xVCC_CORE	8		S1-S2	S3-S5
S1_VPP	0V-12V Note A	25		S1-S3	S4-S5
S2_VPP	0V-12V Note A	25		S1-S3	S4-S5
S1_VCC	0V-5V Note A	24, 25		S1-S3	S4-S5
S2_VCC	0V-5V Note A	24, 25		S1-S3	S4-S5
S1_VCCF	0V-5V Note A	24, 25		S1-S3	S4-S5
S2_VCCF	0V-5V Note A	24, 25		S1-S3	S4-S5
HL_REF	0.9V	8, 13		S1-S2	S3-S5
H_VCCA	1.2V	4		S1-S3	S4-S5
H_VCCIOPLL	1.2V	4		S1-S3	S4-S5
H_GTLREF	0.67xVCC_CORE	4		S1-S2	S3-S5
H_VSSA	1.2V	4		S1-S3	S4-S5
V_DDR_MCH_REF	1.25V	8, 10, 39		S1-S3	S4-S5

Note A Voltage delivered to these pins is determined from the type card inserted to the PCMCIA controller.

Note 1 Rail is available anytime AC and BATTERY are both present, and the BIOS is not inhibiting charge

Note 2	NB powered by AC	VAUX	S1-S3	S4 - S5
	NB powered by BATT	VAUX	S1-S2	S3 - S5

Note 3 Rail is available anytime the HEADPHONE jack is occupied

Note 4	NB powered by AC	3VALW	Always	
	NB powered by BATT	3VALW	S1-S3	S4 - S5
	NB powered by AC	5VALW	Always	
	NB powered by BATT	5VALW	S1-S3	S4 - S5

PCI TABLE

DEVICE	IDSEL	IRQ	REQ/GNT	DREQ/DGNT
DOCK	AD24	PIRQC*		REQ0*/GNT0*
3COM	AD16	PIRQC*		REQ4*/GNT4*
VIDEO	IDSEL	PIRQA* PIRQB*		
PCI4451	AD17	PIRQD*	REQB*/GNTB*	REQ1*/GNT1*
M3i	AD18	PIRQA*	REQA*/GNTA*	REQ2*/GNT2*
MINIPCI	AD19	PIRQB* PIRQD*		REQ3*/GNT3*

BOM BUILD OPTIONS

Option	Description
0	Base Build
1	FDD_PP

PROPRIETARY NOTE: THIS ITEM IS THE PROPERTY OF DELL COMPUTER CORP, AUSTIN, TEXAS AND CONTAINS CONFIDENTIAL AND TRADE SECRET INFORMATION. THIS ITEM MAY NOT BE TRANSFERRED FROM THE CUSTODY OF DELL COMPUTER CORP. EXCEPT AS AUTHORIZED BY DELL COMPUTER CORP., AND THEN ONLY BY WAY OF LOAN FOR LIMITED PURPOSES. IT MUST NOT BE REPRODUCED IN WHOLE OR IN PART AND MUST BE RETURNED TO DELL COMPUTER CORP. UPON REQUEST AND IN ALL EVENTS UPON COMPLETION OF THE PURPOSE OF THE LOAN. NEITHER THIS ITEM OR THE INFORMATION IT CONTAINS MAY BE USED BY OR DISCLOSED TO PERSONS NOT HAVING A NEED FOR SUCH USE OR DISCLOSURE CONSISTENT WITH THE PURPOSE OF THE LOAN WITHOUT THE PRIOR WRITTEN CONSENT OF DELL COMPUTER CORPORATION.

DELL COMPUTER CORPORATION AUSTIN,TEXAS

TITLE: SCHEMATIC, M/B LA-1221

DWG NO. 401195 REV. 4A

DATE 11/15/02 SHEET 53 OF 102

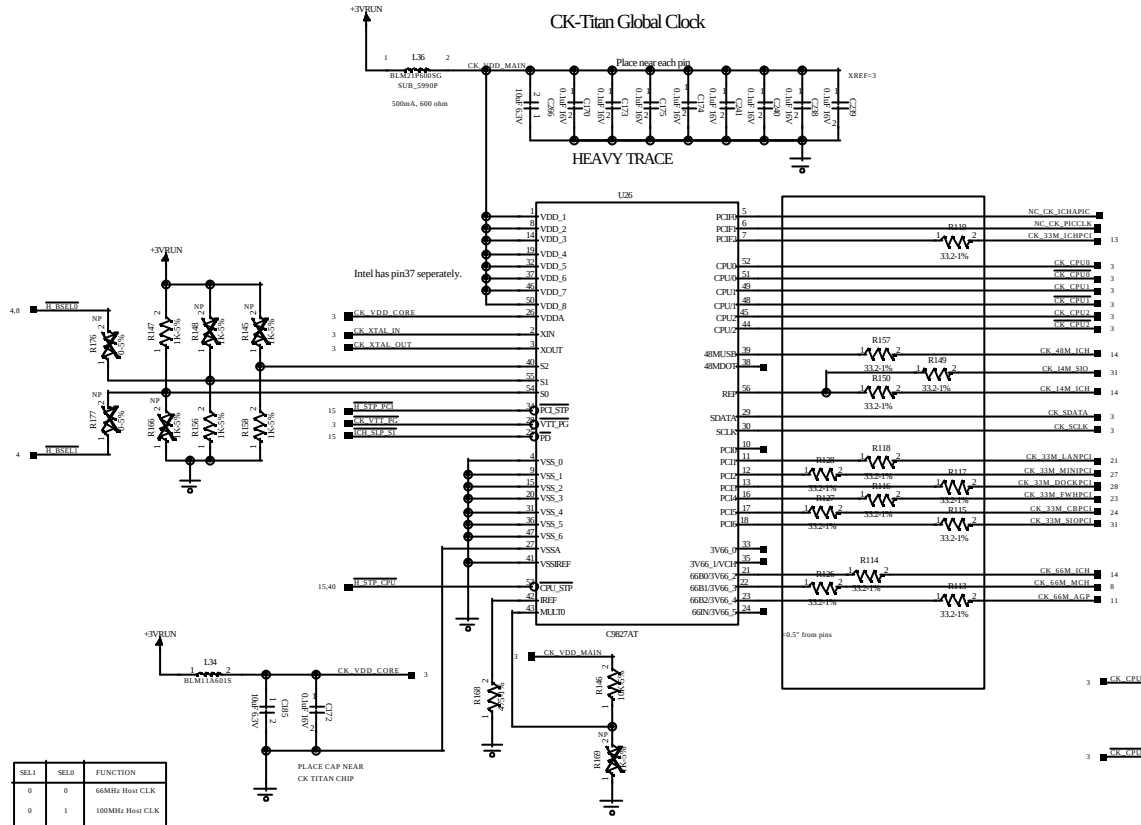

SEL1	SEL0	FUNCTION
0	0	66MHz Host CLK
0	1	100MHz Host CLK
1	0	200MHz Host CLK
1	1	133MHz Host CLK

MULT	IREF	CLOCK SWING
1	475	0.7 Volts
0	221	1.0 Volts

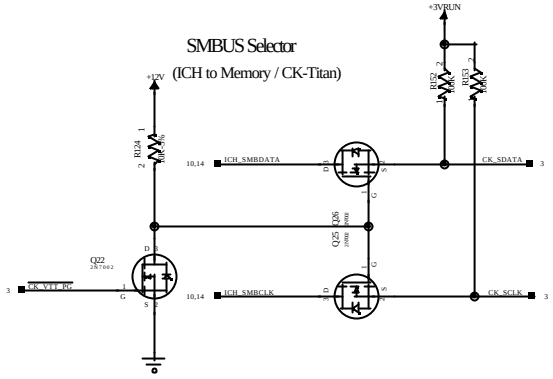

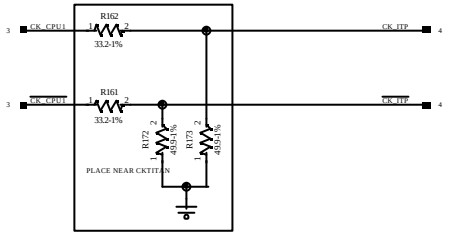

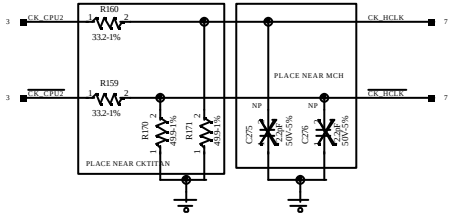

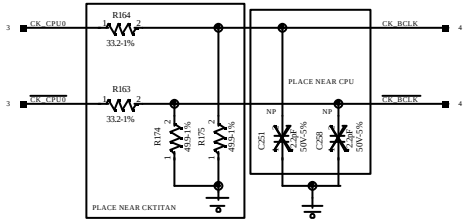

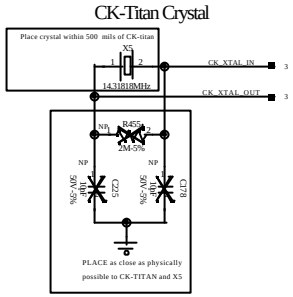

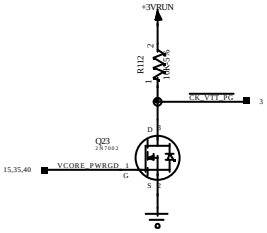

PROPRIETARY NOTE: THIS ITEM IS THE PROPERTY OF DELL COMPUTER CORP, AUSTIN, TEXAS AND CONTAINS CONFIDENTIAL AND TRADE SECRET INFORMATION. THIS ITEM MAY NOT BE TRANSFERRED FROM THE CUSTODY OF DELL COMPUTER CORP. EXCEPT AS AUTHORIZED BY DELL COMPUTER CORP., AND THEN ONLY BY WAY OF LOAN FOR LIMITED PURPOSES. IT MUST NOT BE REPRODUCED IN WHOLE OR IN PART AND MUST BE RETURNED TO DELL COMPUTER CORP. UPON REQUEST AND IN ALL EVENTS UPON COMPLETION OF THE PURPOSE OF THE LOAN. NEITHER THIS ITEM OR THE INFORMATION IT CONTAINS MAY BE USED BY OR DISCLOSED TO PERSONS NOT HAVING A NEED FOR SUCH USE OR DISCLOSURE CONSISTENT WITH THE PURPOSE OF THE LOAN WITHOUT THE PRIOR WRITTEN CONSENT OF DELL COMPUTER CORPORATION.

DELL COMPUTER CORPORATION AUSTIN,TEXAS

TITLE: SCHEMATIC, M/B LA-1221

DWG NO. 401195 REV. 4A

DATE: 11/15/02 SHEET 54 OF 102

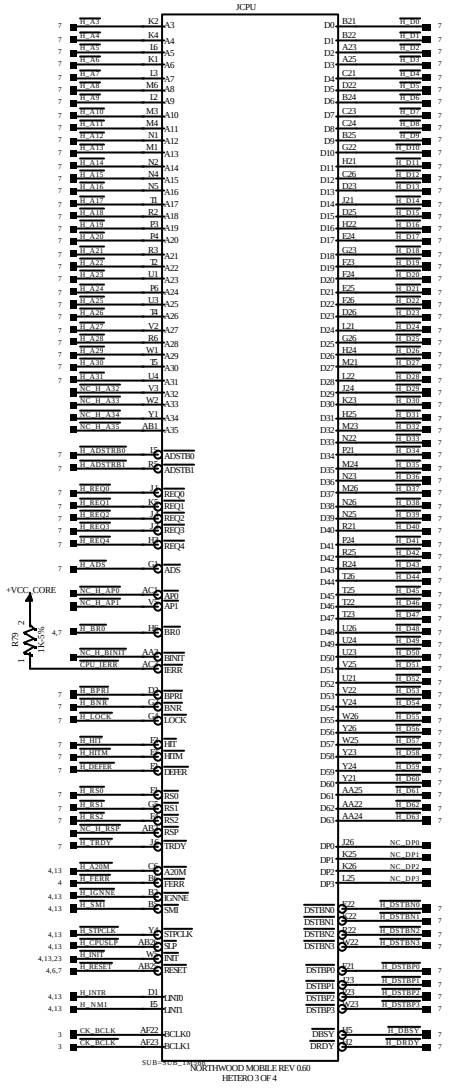

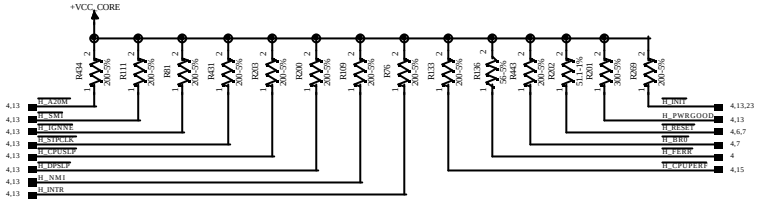

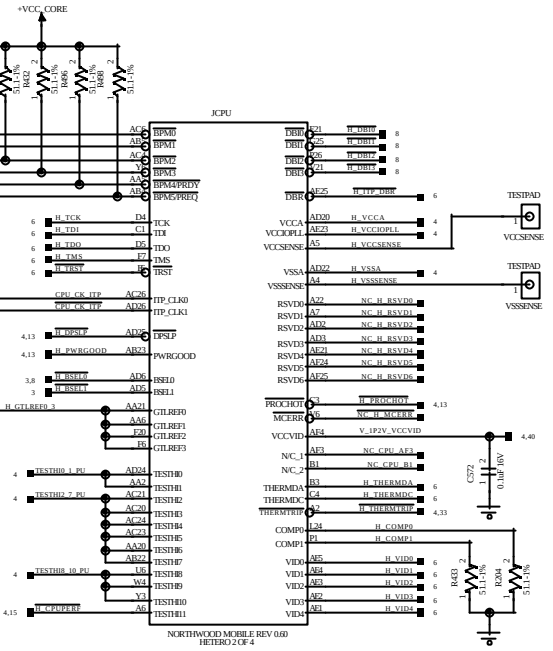

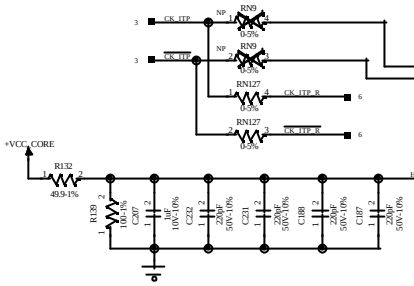

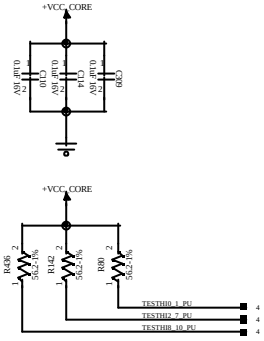

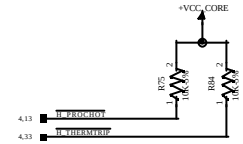

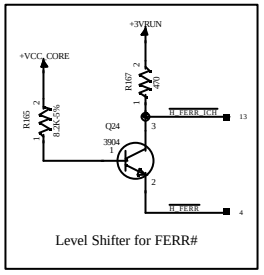

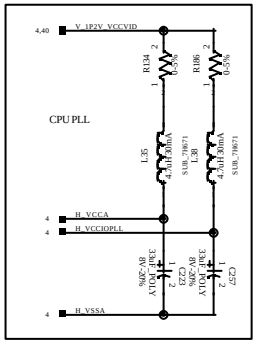

DELL COMPUTER CORPORATION AUSTIN,TEXAS

TITLE: SCHEMATIC, M/B LA-1221

DWG NO. 401195 REV. 4A

DATE: 11/15/02 SHEET 55 OF 102

PROPRIETARY NOTE: THIS ITEM IS THE PROPERTY OF DELL COMPUTER CORP, AUSTIN, TEXAS AND CONTAINS CONFIDENTIAL AND TRADE SECRET INFORMATION. THIS ITEM MAY NOT BE TRANSFERRED FROM THE CUSTODY OF DELL COMPUTER CORP. EXCEPT AS AUTHORIZED BY DELL COMPUTER CORP., AND THEN ONLY BY WAY OF LOAN FOR LIMITED PURPOSES. IT MUST NOT BE REPRODUCED IN WHOLE OR IN PART AND MUST BE RETURNED TO DELL COMPUTER CORP. UPON REQUEST AND IN ALL EVENTS UPON COMPLETION OF THE PURPOSE OF THE LOAN. NEITHER THIS ITEM OR THE INFORMATION IT CONTAINS MAY BE USED BY OR DISCLOSED TO PERSONS NOT HAVING A NEED FOR SUCH USE OR DISCLOSURE CONSISTENT WITH THE PURPOSE OF THE LOAN WITHOUT THE PRIOR WRITTEN CONSENT OF DELL COMPUTER CORPORATION.

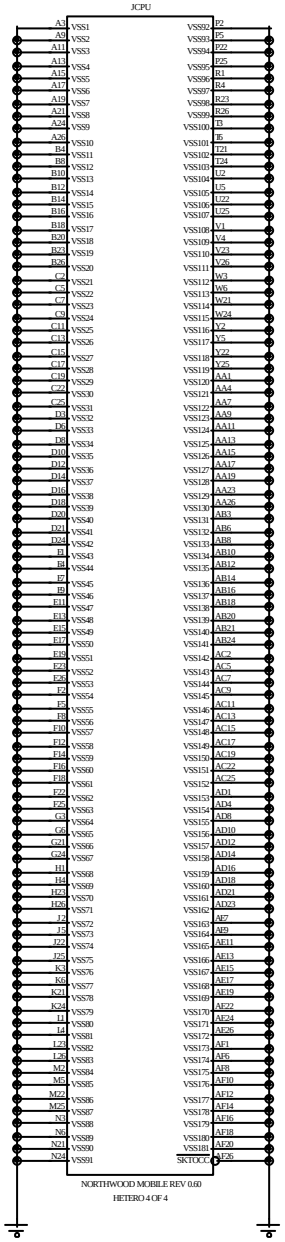

CPU High Frequency Decoupling

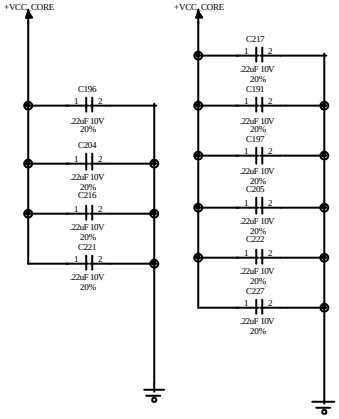

CPU Bulk Decoupling

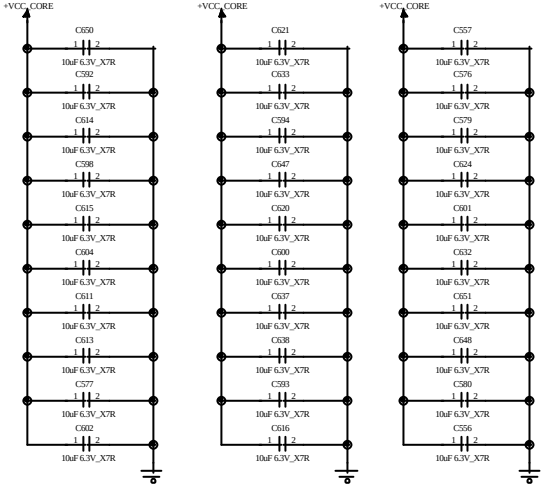

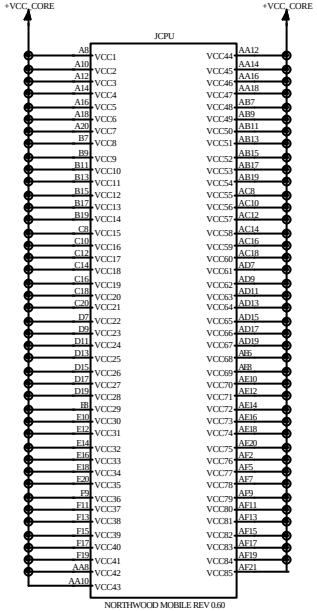

Place caps close to JCPU
ALL CAPS NEED TO BE PLACED
DIRECTLY UNDER JCPU, WHEN
POSSIBLE USE TWO VIAS/PAD

PROPRIETARY NOTE: THIS ITEM IS THE PROPERTY OF DELL COMPUTER CORP, AUSTIN, TEXAS AND CONTAINS CONFIDENTIAL AND TRADE SECRET INFORMATION. THIS ITEM MAY NOT BE TRANSFERRED FROM THE CUSTODY OF DELL COMPUTER CORP. EXCEPT AS AUTHORIZED BY DELL COMPUTER CORP., AND THEN ONLY BY WAY OF LOAN FOR LIMITED PURPOSES. IT MUST NOT BE REPRODUCED IN WHOLE OR IN PART AND MUST BE RETURNED TO DELL COMPUTER CORP. UPON REQUEST AND IN ALL EVENTS UPON COMPLETION OF THE PURPOSE OF THE LOAN. NEITHER THIS ITEM OR THE INFORMATION IT CONTAINS MAY BE USED BY OR DISCLOSED TO PERSONS NOT HAVING A NEED FOR SUCH USE OR DISCLOSURE CONSISTENT WITH THE PURPOSE OF THE LOAN WITHOUT THE PRIOR WRITTEN CONSENT OF DELL COMPUTER CORPORATION.

DELL COMPUTER CORPORATION AUSTIN,TEXAS

TITLE: SCHEMATIC, M/B LA-1221

DWG NO. 401195 REV. 4A

DATE: 11/15/02 SHEET 56 OF 102

CPU Voltage ID Mux

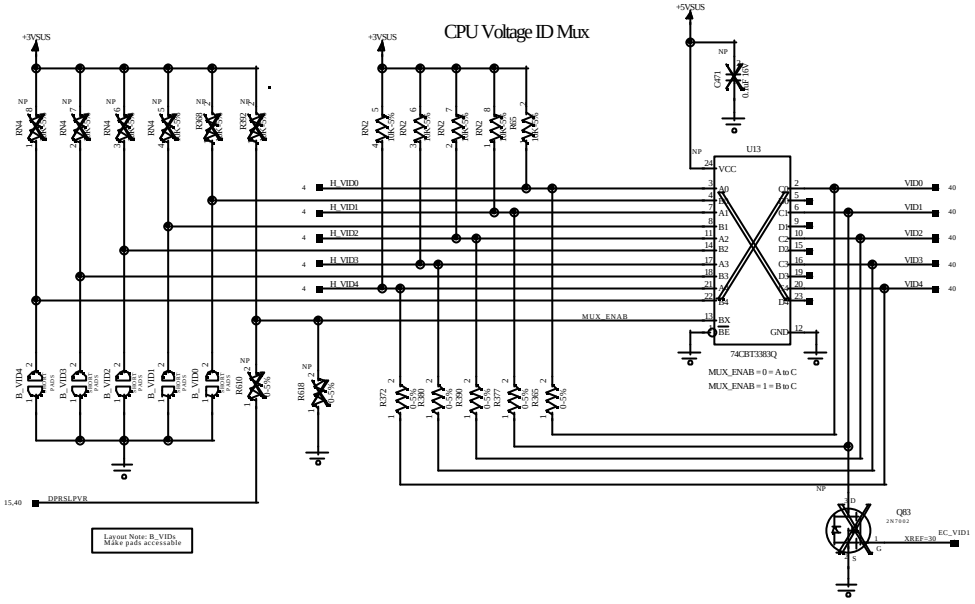

O = pads open
S = pads shorted

B_VID Setting						B_VID Setting					
4	3	2	1	0	VCC_CORE	4	3	2	1	0	VCC_CORE
S	S	S	S	S	1.750V	O	S	S	S	S	0.9750V
S	S	S	S	O	1.700V	O	S	S	S	O	0.950V
S	S	S	O	S	1.650V	O	S	S	O	S	0.925V
S	S	S	O	O	1.600V	O	S	S	O	O	0.900V
S	S	O	S	S	1.550V	O	S	O	S	S	0.875V
S	S	O	S	O	1.500V	O	S	O	S	O	0.850V
S	S	O	O	S	1.450V	O	S	O	O	S	0.825V
S	S	O	O	O	1.400V	O	S	O	O	O	0.800V
S	O	S	S	S	1.350V	O	O	S	S	S	0.775V
S	O	S	S	O	1.300V	O	O	S	S	O	0.750V
S	O	S	O	S	1.250V	O	O	S	O	S	0.725V
S	O	S	O	O	1.200V	O	O	S	O	O	0.700V
S	O	O	S	S	1.150V	O	O	O	S	S	0.675V
S	O	O	S	O	1.100V	O	O	O	S	O	0.650V
S	O	O	O	S	1.050V	O	O	O	O	S	0.625V
S	O	O	O	O	1.000V	O	O	O	O	O	0.600V

Layout Note: B_VIDs
Make pads accessable

CPU Temperature Sensor

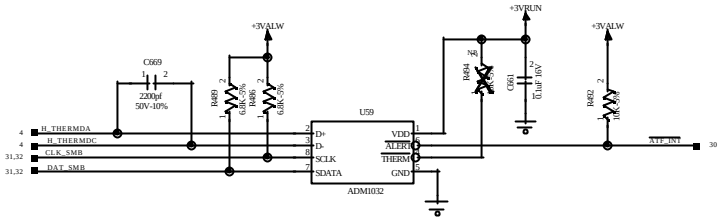

Layout Note: CPU Temperature Sensor
Place this circuit on the
bottom side of the mainboard

ITP Population Matrix

Ref. Des.	ITP Used	ITP Not Used
R264	510 ohms	1.5k
R255	pop	no pop
R257	pop	no pop
R265	no pop	1k pull-down
R258	pop	no pop
R140 (p.7)	pop	no pop
R249	pop	no pop
R248	pop	no pop
R280	no pop	no pop
R281	pop	no pop
R279	pop	no pop
R278	pop	no pop
R283	pop	no pop
R275	pop	no pop
R273	pop	no pop
R256	39 ohms	1k
R251	no pop	pop
R271	pop	no pop
R263	pop	no pop
R272	pop	pop

Circuit Not Complete. Pending input from Intel.

ITP Debug Connector

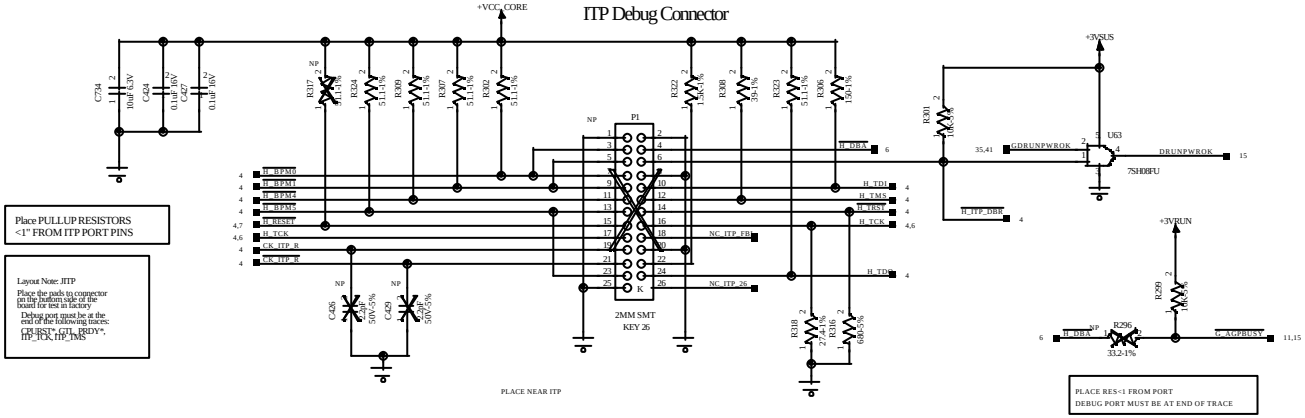

Place PULLUP RESISTORS
<1" FROM ITP PORT PINS

Layout Note: JITP
Place the pads to connector on the bottom side of the board for test in factory
Debug port must be at the end of the following traces:
CPURST, CPU_RSTDY*, ITP_TCK, ITP_TMS

PLACE NEAR ITP

PLACE RES<1 FROM PORT
DEBUG PORT MUST BE AT END OF TRACE

PROPRIETARY NOTE: THIS ITEM IS THE PROPERTY OF DELL COMPUTER CORP, AUSTIN, TEXAS AND CONTAINS CONFIDENTIAL AND TRADE SECRET INFORMATION. THIS ITEM MAY NOT BE TRANSFERRED FROM THE CUSTODY OF DELL COMPUTER CORP. EXCEPT AS AUTHORIZED BY DELL COMPUTER CORP., AND THEN ONLY BY WAY OF LOAN FOR LIMITED PURPOSES. IT MUST NOT BE REPRODUCED IN WHOLE OR IN PART AND MUST BE RETURNED TO DELL COMPUTER CORP. UPON REQUEST AND IN ALL EVENTS UPON COMPLETION OF THE PURPOSE OF THE LOAN. NEITHER THIS ITEM OR THE INFORMATION IT CONTAINS MAY BE USED BY OR DISCLOSED TO PERSONS NOT HAVING A NEED FOR SUCH USE OR DISCLOSURE CONSISTENT WITH THE PURPOSE OF THE LOAN WITHOUT THE PRIOR WRITTEN CONSENT OF DELL COMPUTER CORPORATION.

DELL COMPUTER CORPORATION AUSTIN,TEXAS

TITLE: SCHEMATIC, M/B LA-1221

DWG NO. 401195 REV. 4A

DATE: 11/15/02 SHEET 57 OF 102

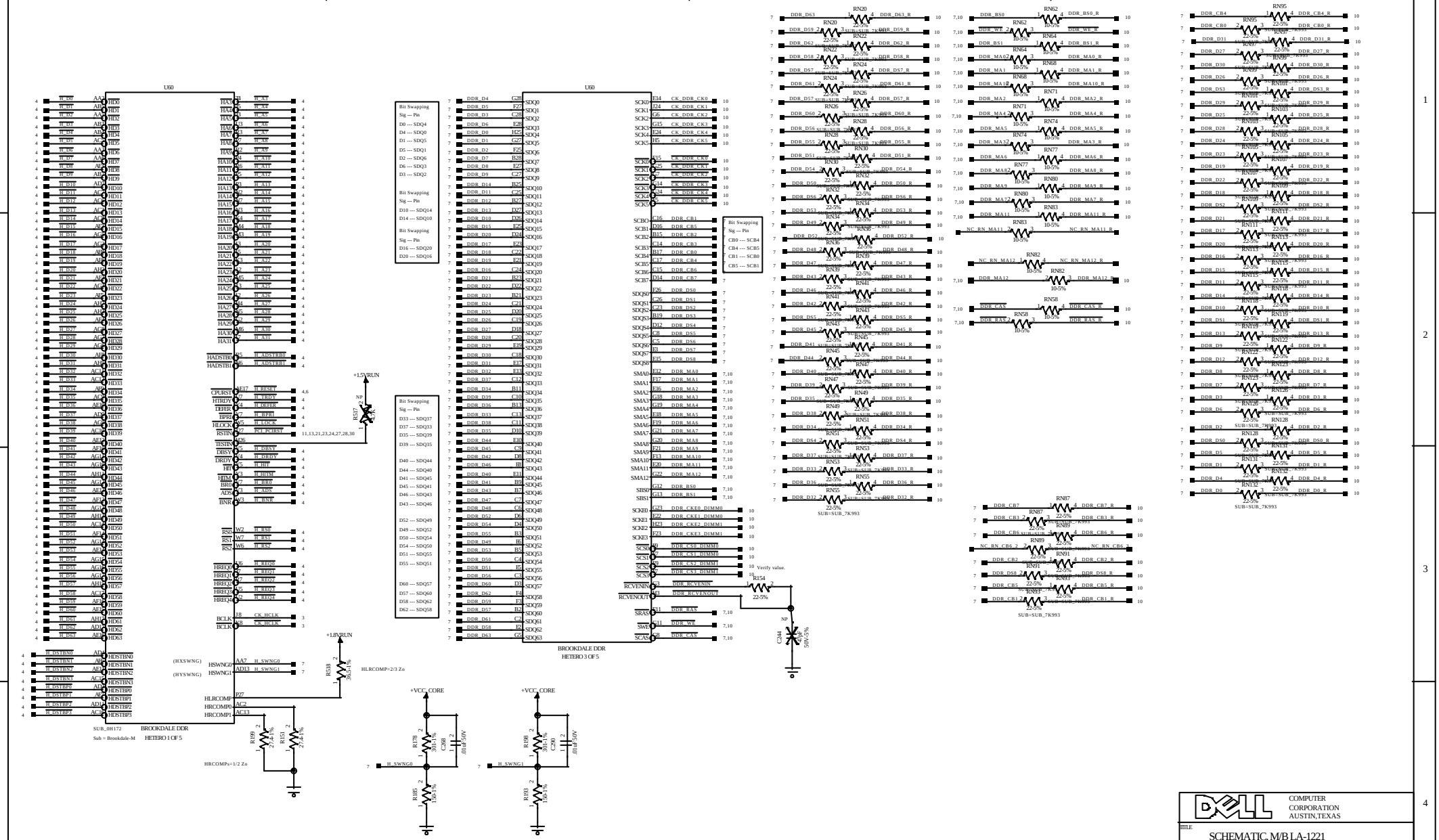

COMPUTER CORPORATION AUSTIN,TEXAS

TITLE: SCHEMATIC, M/B LA-1221

DWG NO. 401195 REV. 4A

DATE: 11/15/02 SHEET 58 OF 102

PROPRIETARY NOTE: THIS ITEM IS THE PROPERTY OF DELL COMPUTER CORP. AUSTIN, TEXAS AND CONTAINS CONFIDENTIAL AND TRADE SECRET INFORMATION. THIS ITEM MAY NOT BE TRANSFERRED FROM THE CUSTODY OF DELL COMPUTER CORP. EXCEPT AS AUTHORIZED BY DELL COMPUTER CORP., AND THEN ONLY BY WAY OF LOAN FOR LIMITED PURPOSES. IT MUST NOT BE REPRODUCED IN WHOLE OR IN PART AND MUST BE RETURNED TO DELL COMPUTER CORP. UPON REQUEST AND IN ALL EVENTS UPON COMPLETION OF THE PURPOSE OF THE LOAN. NEITHER THIS ITEM OR THE INFORMATION IT CONTAINS MAY BE USED BY OR DISCLOSED TO PERSONS NOT HAVING A NEED FOR SUCH USE OR DISCLOSURE CONSISTENT WITH THE PURPOSE OF THE LOAN WITHOUT THE PRIOR WRITTEN CONSENT OF DELL COMPUTER CORPORATION.

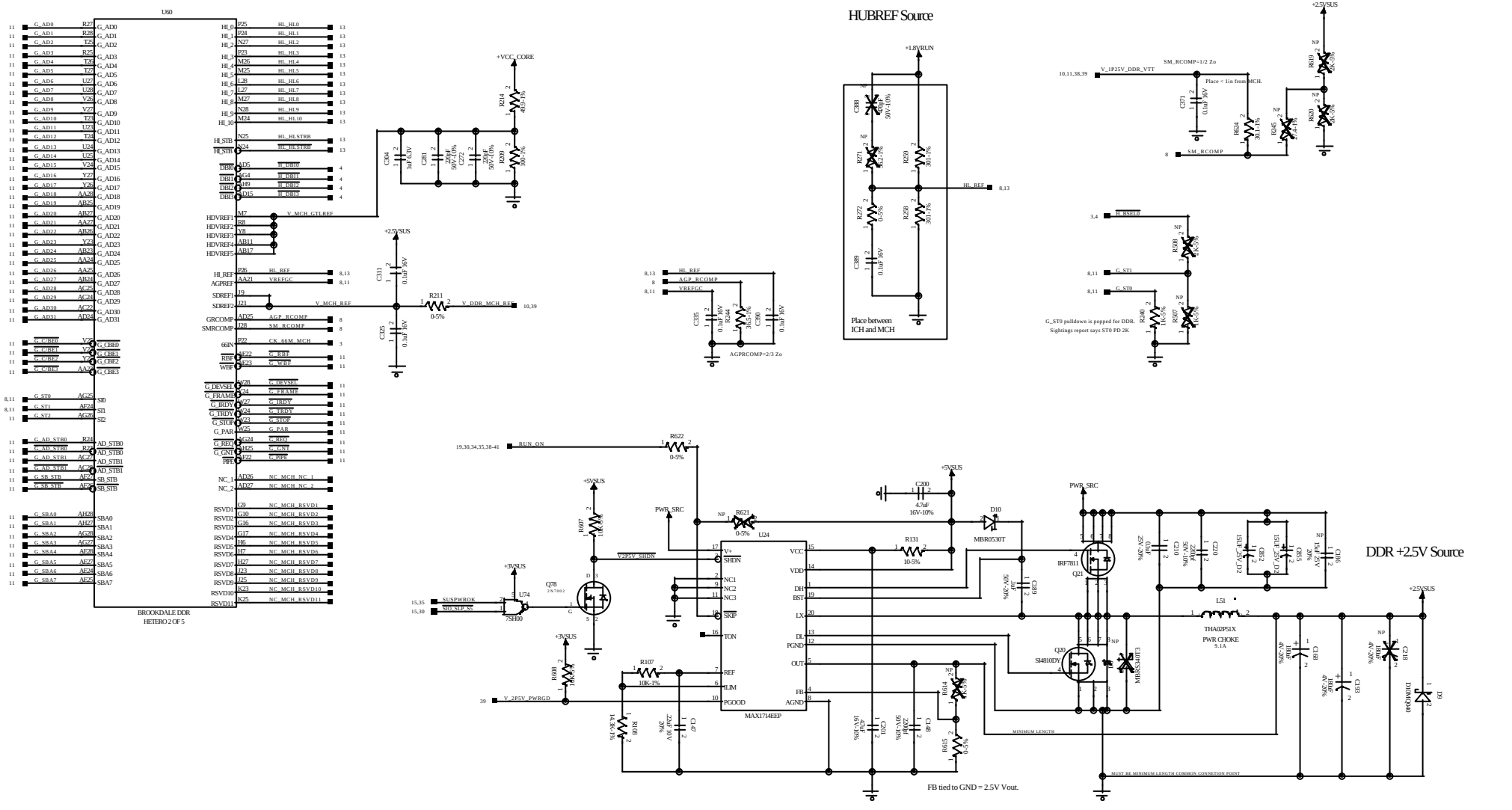

PROPRIETARY NOTE: THIS ITEM IS THE PROPERTY OF DELL COMPUTER CORP. AUSTIN, TEXAS AND CONTAINS CONFIDENTIAL AND TRADE SECRET INFORMATION. THIS ITEM MAY NOT BE TRANSFERRED FROM THE CUSTODY OF DELL COMPUTER CORP. EXCEPT AS AUTHORIZED BY DELL COMPUTER CORP., AND THEN ONLY BY WAY OF LOAN FOR LIMITED PURPOSES. IT MUST NOT BE REPRODUCED IN WHOLE OR IN PART AND MUST BE RETURNED TO DELL COMPUTER CORP. UPON REQUEST AND IN ALL EVENTS UPON COMPLETION OF THE PURPOSE OF THE LOAN. NEITHER THIS ITEM OR THE INFORMATION IT CONTAINS MAY BE USED BY OR DISCLOSED TO PERSONS NOT HAVING A NEED FOR SUCH USE OR DISCLOSURE CONSISTENT WITH THE PURPOSE OF THE LOAN WITHOUT THE PRIOR WRITTEN CONSENT OF DELL COMPUTER CORPORATION.

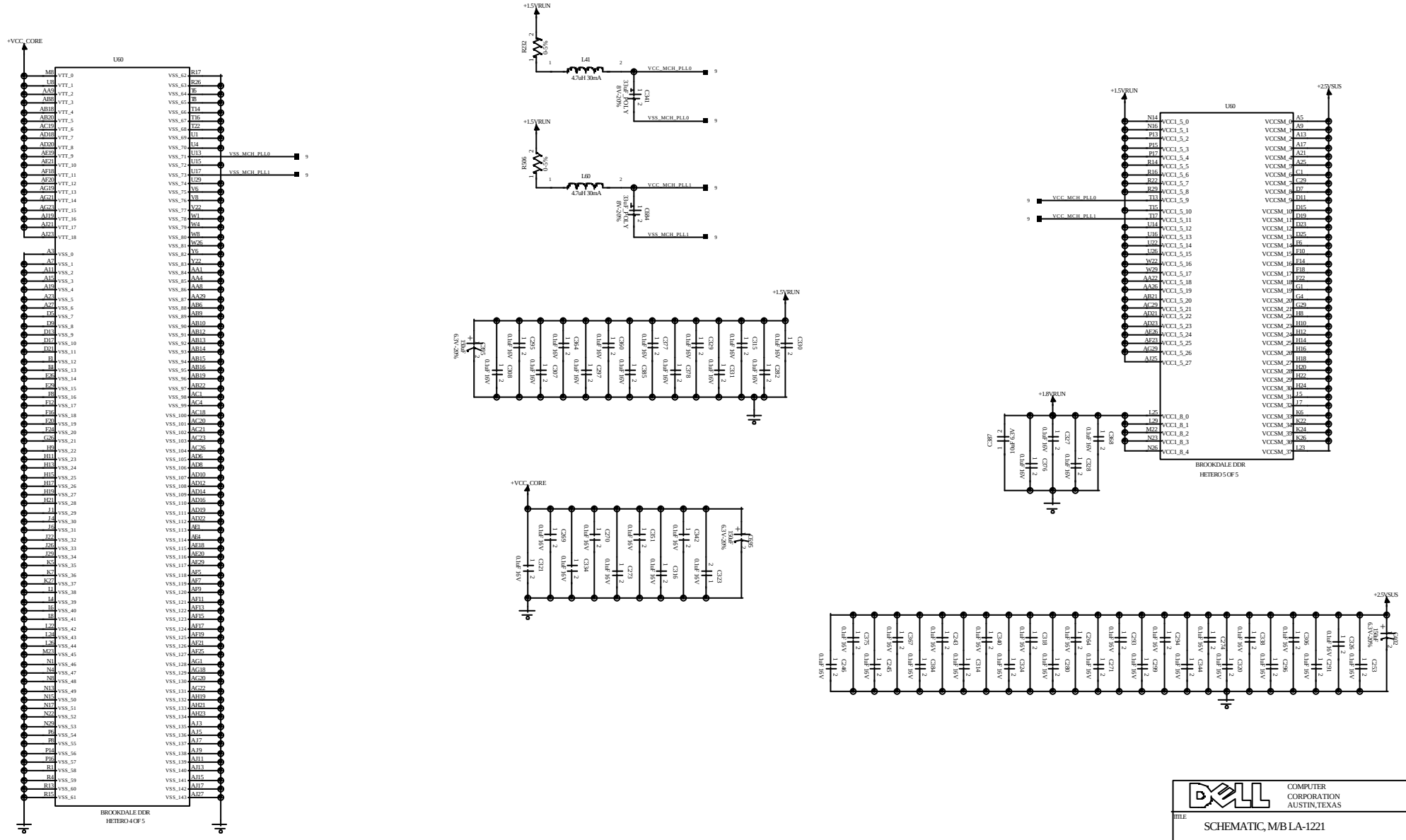

PROPRIETARY NOTE: THIS ITEM IS THE PROPERTY OF DELL COMPUTER CORP, AUSTIN, TEXAS AND CONTAINS CONFIDENTIAL AND TRADE SECRET INFORMATION. THIS ITEM MAY NOT BE TRANSFERRED FROM THE CUSTODY OF DELL COMPUTER CORP. EXCEPT AS AUTHORIZED BY DELL COMPUTER CORP., AND THEN ONLY BY WAY OF LOAN FOR LIMITED PURPOSES. IT MUST NOT BE REPRODUCED IN WHOLE OR IN PART AND MUST BE RETURNED TO DELL COMPUTER CORP. UPON REQUEST AND IN ALL EVENTS UPON COMPLETION OF THE PURPOSE OF THE LOAN. NEITHER THIS ITEM OR THE INFORMATION IT CONTAINS MAY BE USED BY OR DISCLOSED TO PERSONS NOT HAVING A NEED FOR SUCH USE OR DISCLOSURE CONSISTENT WITH THE PURPOSE OF THE LOAN WITHOUT THE PRIOR WRITTEN CONSENT OF DELL COMPUTER CORPORATION.

DELL COMPUTER CORPORATION AUSTIN,TEXAS

TITLE: SCHEMATIC, M/B LA-1221

DWG NO. 401195 REV. 4A

DATE: 11/15/02 SHEET 60 OF 102

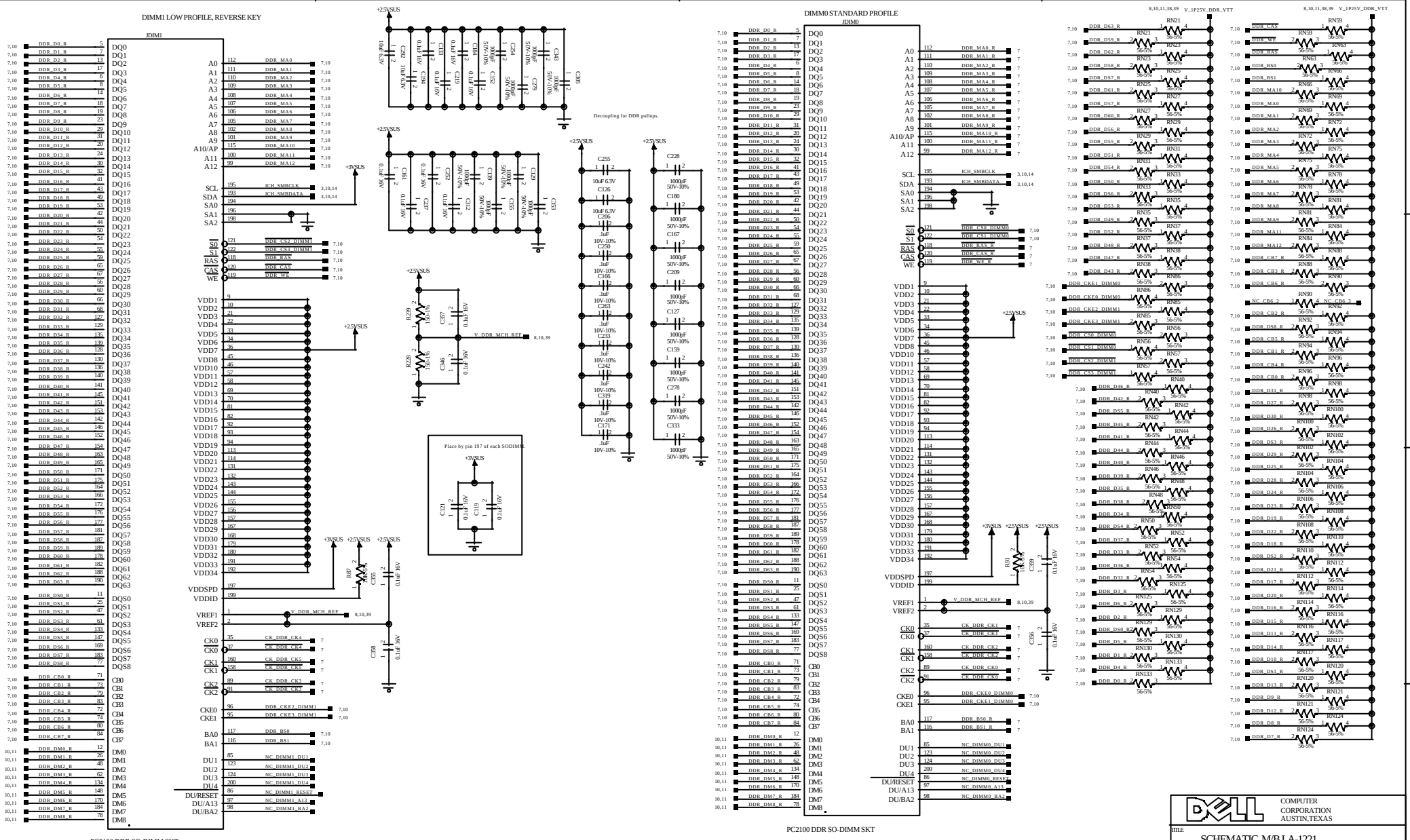
11-20-2002_22:38
DIMM1 LOW PROFILE, REVERSE KEY
JDIM1
PC2100 DDR SO-DIMM SKT
REVERSE KEY
Decoupling for DDR pullups.
Place by pin 197 of each SODIMM.
DIMM0 STANDARD PROFILE
JDIM0
PC2100 DDR SO-DIMM SKT
V_DDR_MCH_REF
V_1P25V_DDR_VTT
+2.5VSUS
+3VSUS
ICH_SMBCLK
ICH_SMBDATA
DDR_CS2_DIMM1
DDR_CS3_DIMM1
DDR_RAS
DDR_CAS
DDR_WE
CK_DDR_CK4
CK_DDR_CK5
CK_DDR_CK3
DDR_CKE2_DIMM1
DDR_CKE3_DIMM1
DDR_BS0
DDR_BS1
NC_DIMM1_DU1
NC_DIMM1_DU2
NC_DIMM1_DU3
NC_DIMM1_DU4
NC_DIMM1_RESET
NC_DIMM1_A13
NC_DIMM1_BA2
DDR_CS0_DIMM0
DDR_CS1_DIMM0
DDR_RAS_R
DDR_CAS_R
DDR_WE_R
DDR_CKE0_DIMM0
DDR_CKE1_DIMM0
CK_DDR_CK1
CK_DDR_CK2
CK_DDR_CK0
NC_DIMM0_DU1
NC_DIMM0_DU2
NC_DIMM0_DU3
NC_DIMM0_DU4
NC_DIMM0_RESET
NC_DIMM0_A13
NC_DIMM0_BA2
DELL
COMPUTER
CORPORATION
AUSTIN,TEXAS
TITLE
SCHEMATIC, M/B LA-1221
DWG NO. 401195
REV. 4A
DATE 11/15/02
SHEET 61 OF 102
PROPRIETARY NOTE: THIS ITEM IS THE PROPERTY OF DELL COMPUTER CORP, AUSTIN, TEXAS AND CONTAINS CONFIDENTIAL AND TRADE SECRET INFORMATION. THIS ITEM MAY NOT BE TRANSFERRED FROM THE CUSTODY OF DELL COMPUTER CORP. EXCEPT AS AUTHORIZED BY DELL COMPUTER CORP., AND THEN ONLY BY WAY OF LOAN FOR LIMITED PURPOSES. IT MUST NOT BE REPRODUCED IN WHOLE OR IN PART AND MUST BE RETURNED TO DELL COMPUTER CORP. UPON REQUEST AND IN ALL EVENTS UPON COMPLETION OF THE PURPOSE OF THE LOAN. NEITHER THIS ITEM OR THE INFORMATION IT CONTAINS MAY BE USED BY OR DISCLOSED TO PERSONS NOT HAVING A NEED FOR SUCH USE OR DISCLOSURE CONSISTENT WITH THE PURPOSE OF THE LOAN WITHOUT THE PRIOR WRITTEN CONSENT OF DELL COMPUTER CORPORATION.

DDR VTT decoupling.

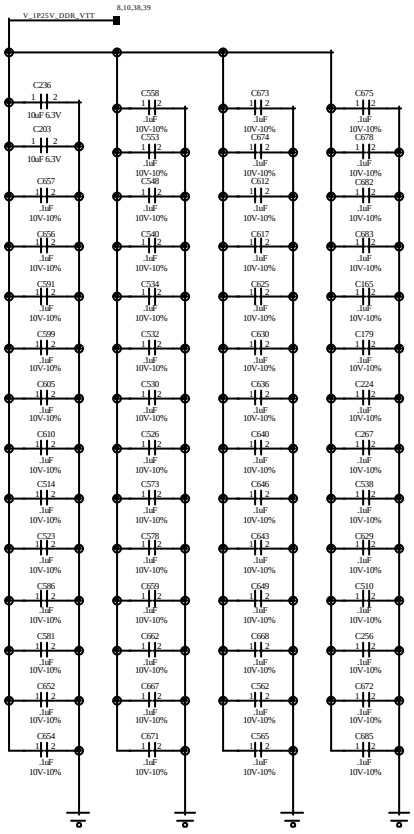

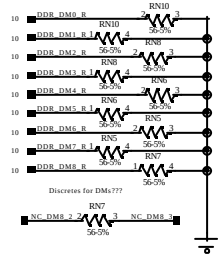

AGP pullups: matches Meteor. Verify pullups in Brookdale.

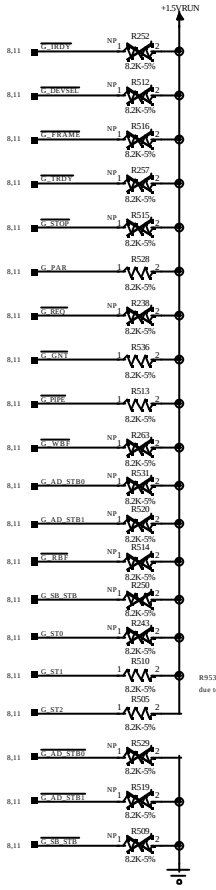

R953 and R898 are popped due to BD-M A0 problem.

VGA Board Connector

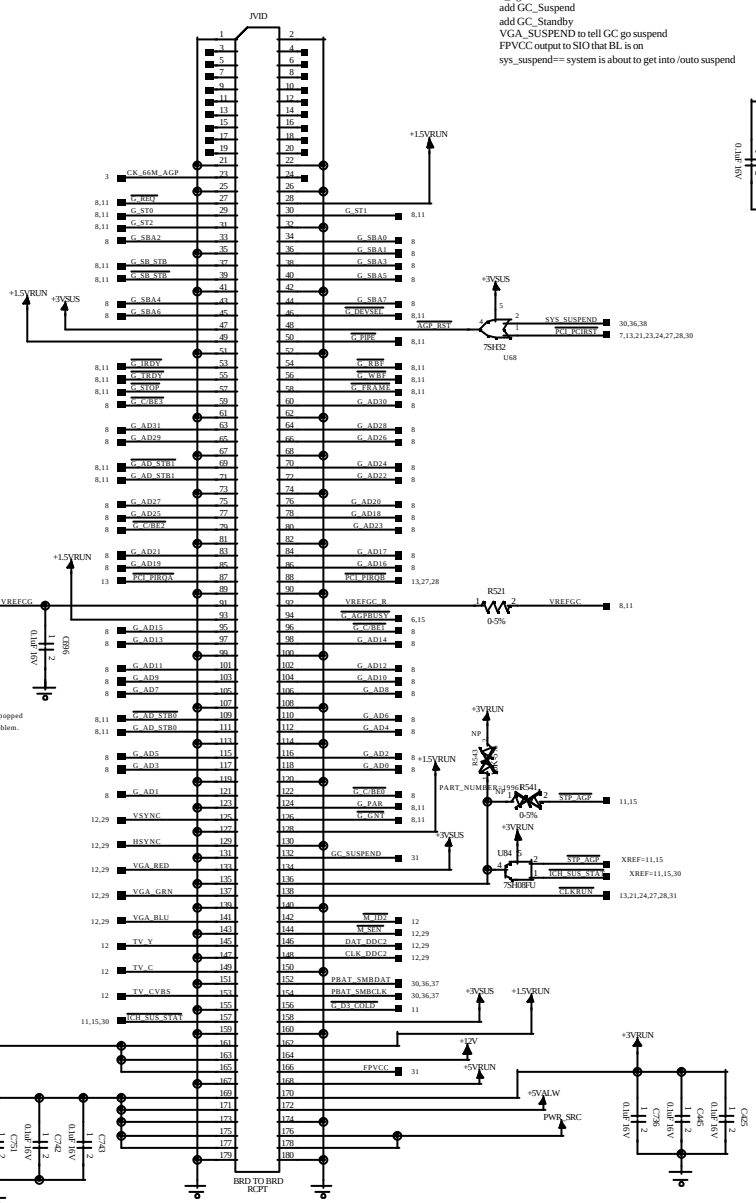

vga-off==vga_suspend
v_vga== comes from 3VSUS and 5vSus
add GC_Suspend
add GC_Standby
VGA_SUSPEND to tell GC go suspend
FPVCC output to SIO that BL is on
sys_suspend== system is about to get into /outo suspend

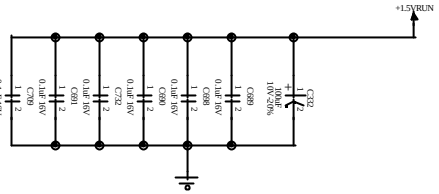

VREFCG Source

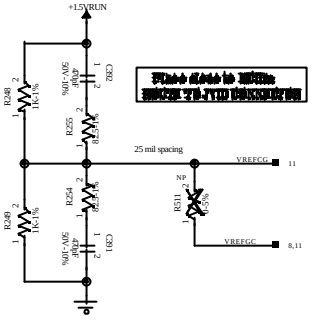

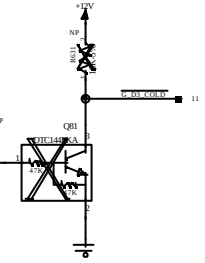

PROPRIETARY NOTE: THIS ITEM IS THE PROPERTY OF DELL COMPUTER CORP, AUSTIN, TEXAS AND CONTAINS CONFIDENTIAL AND TRADE SECRET INFORMATION. THIS ITEM MAY NOT BE TRANSFERRED FROM THE CUSTODY OF DELL COMPUTER CORP. EXCEPT AS AUTHORIZED BY DELL COMPUTER CORP., AND THEN ONLY BY WAY OF LOAN FOR LIMITED PURPOSES. IT MUST NOT BE REPRODUCED IN WHOLE OR IN PART AND MUST BE RETURNED TO DELL COMPUTER CORP. UPON REQUEST AND IN ALL EVENTS UPON COMPLETION OF THE PURPOSE OF THE LOAN. NEITHER THIS ITEM OR THE INFORMATION IT CONTAINS MAY BE USED BY OR DISCLOSED TO PERSONS NOT HAVING A NEED FOR SUCH USE OR DISCLOSURE CONSISTENT WITH THE PURPOSE OF THE LOAN WITHOUT THE PRIOR WRITTEN CONSENT OF DELL COMPUTER CORPORATION.

DELL COMPUTER CORPORATION AUSTIN,TEXAS

TITLE: SCHEMATIC, M/B LA-1221

DWG NO. 401195 REV. 4A

DATE: 11/15/02 SHEET 62 OF 102

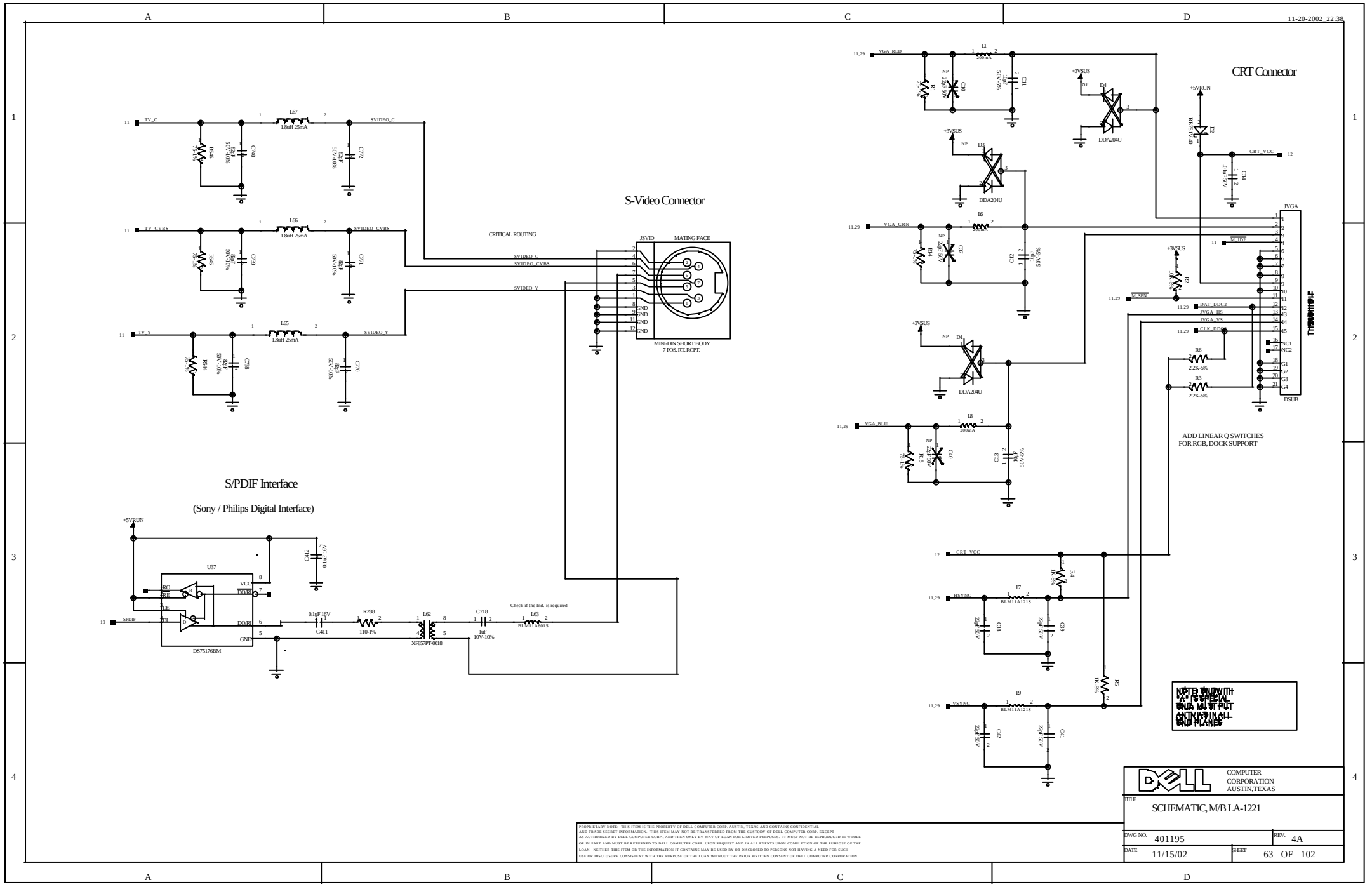

PROPRIETARY NOTE: THIS ITEM IS THE PROPERTY OF DELL COMPUTER CORP, AUSTIN, TEXAS AND CONTAINS CONFIDENTIAL AND TRADE SECRET INFORMATION. THIS ITEM MAY NOT BE TRANSFERRED FROM THE CUSTODY OF DELL COMPUTER CORP. EXCEPT AS AUTHORIZED BY DELL COMPUTER CORP., AND THEN ONLY BY WAY OF LOAN FOR LIMITED PURPOSES. IT MUST NOT BE REPRODUCED IN WHOLE OR IN PART AND MUST BE RETURNED TO DELL COMPUTER CORP. UPON REQUEST AND IN ALL EVENTS UPON COMPLETION OF THE PURPOSE OF THE LOAN. NEITHER THIS ITEM OR THE INFORMATION IT CONTAINS MAY BE USED BY OR DISCLOSED TO PERSONS NOT HAVING A NEED FOR SUCH USE OR DISCLOSURE CONSISTENT WITH THE PURPOSE OF THE LOAN WITHOUT THE PRIOR WRITTEN CONSENT OF DELL COMPUTER CORPORATION.

DELL COMPUTER CORPORATION AUSTIN,TEXAS

TITLE: SCHEMATIC, M/B LA-1221

DWG NO. 401195 REV. 4A

DATE: 11/15/02 SHEET 63 OF 102

ICH3-M (1/4)
PCI/CPU/Hublink Interface

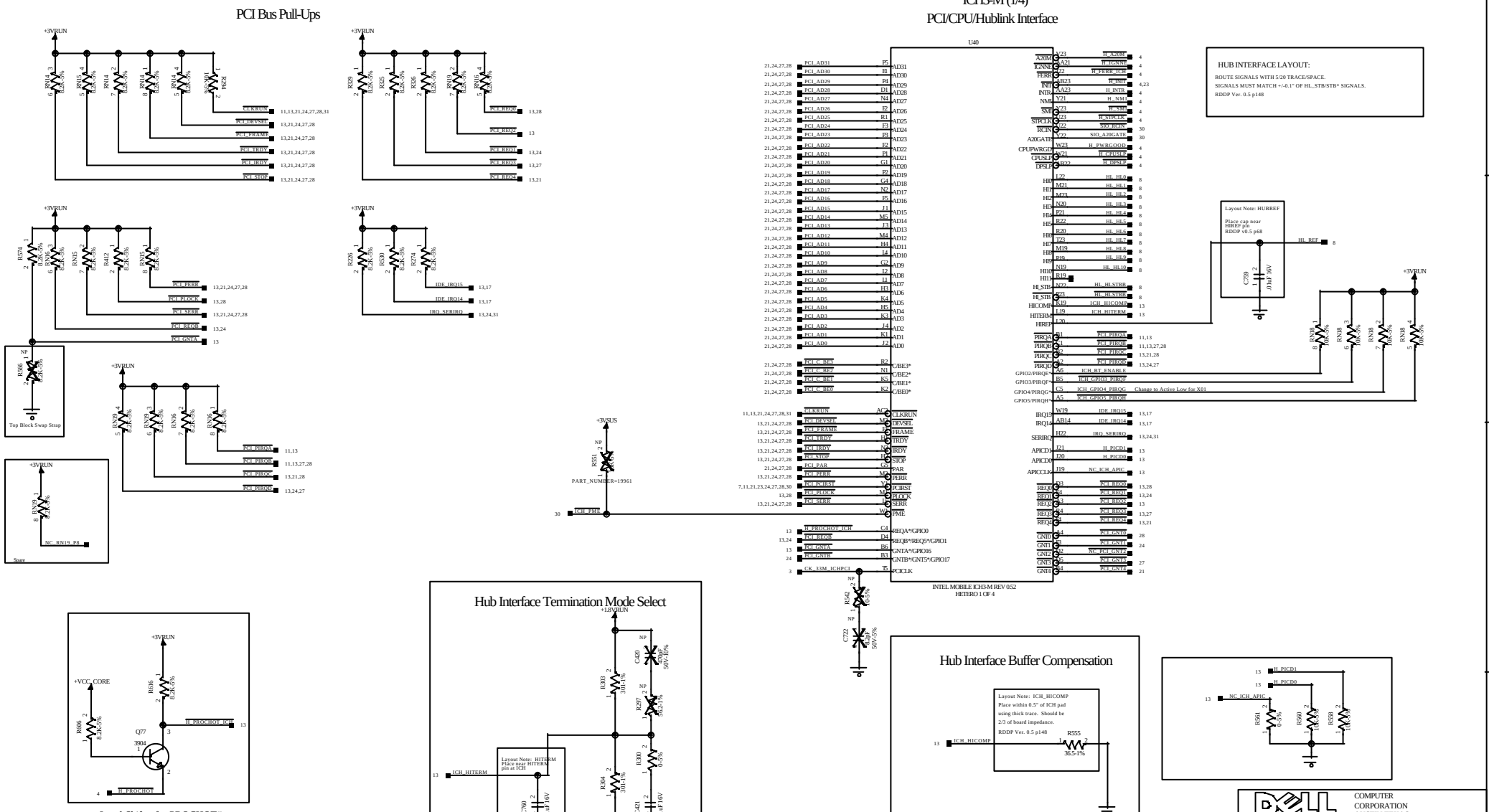

PROPRIETARY NOTE: THIS ITEM IS THE PROPERTY OF DELL COMPUTER CORP, AUSTIN, TEXAS AND CONTAINS CONFIDENTIAL AND TRADE SECRET INFORMATION. THIS ITEM MAY NOT BE TRANSFERRED FROM THE CUSTODY OF DELL COMPUTER CORP. EXCEPT AS AUTHORIZED BY DELL COMPUTER CORP., AND THEN ONLY BY WAY OF LOAN FOR LIMITED PURPOSES. IT MUST NOT BE REPRODUCED IN WHOLE OR IN PART AND MUST BE RETURNED TO DELL COMPUTER CORP. UPON REQUEST AND IN ALL EVENTS UPON COMPLETION OF THE PURPOSE OF THE LOAN. NEITHER THIS ITEM OR THE INFORMATION IT CONTAINS MAY BE USED BY OR DISCLOSED TO PERSONS NOT HAVING A NEED FOR SUCH USE OR DISCLOSURE CONSISTENT WITH THE PURPOSE OF THE LOAN WITHOUT THE PRIOR WRITTEN CONSENT OF DELL COMPUTER CORPORATION.

DELL COMPUTER CORPORATION AUSTIN,TEXAS

TITLE: SCHEMATIC, M/B LA-1221

DWG NO. 401195 REV. 4A

DATE: 11/15/02 SHEET 64 OF 102

ICH3-M (2/4)
USB / ACLink / IDE / LPC Interface

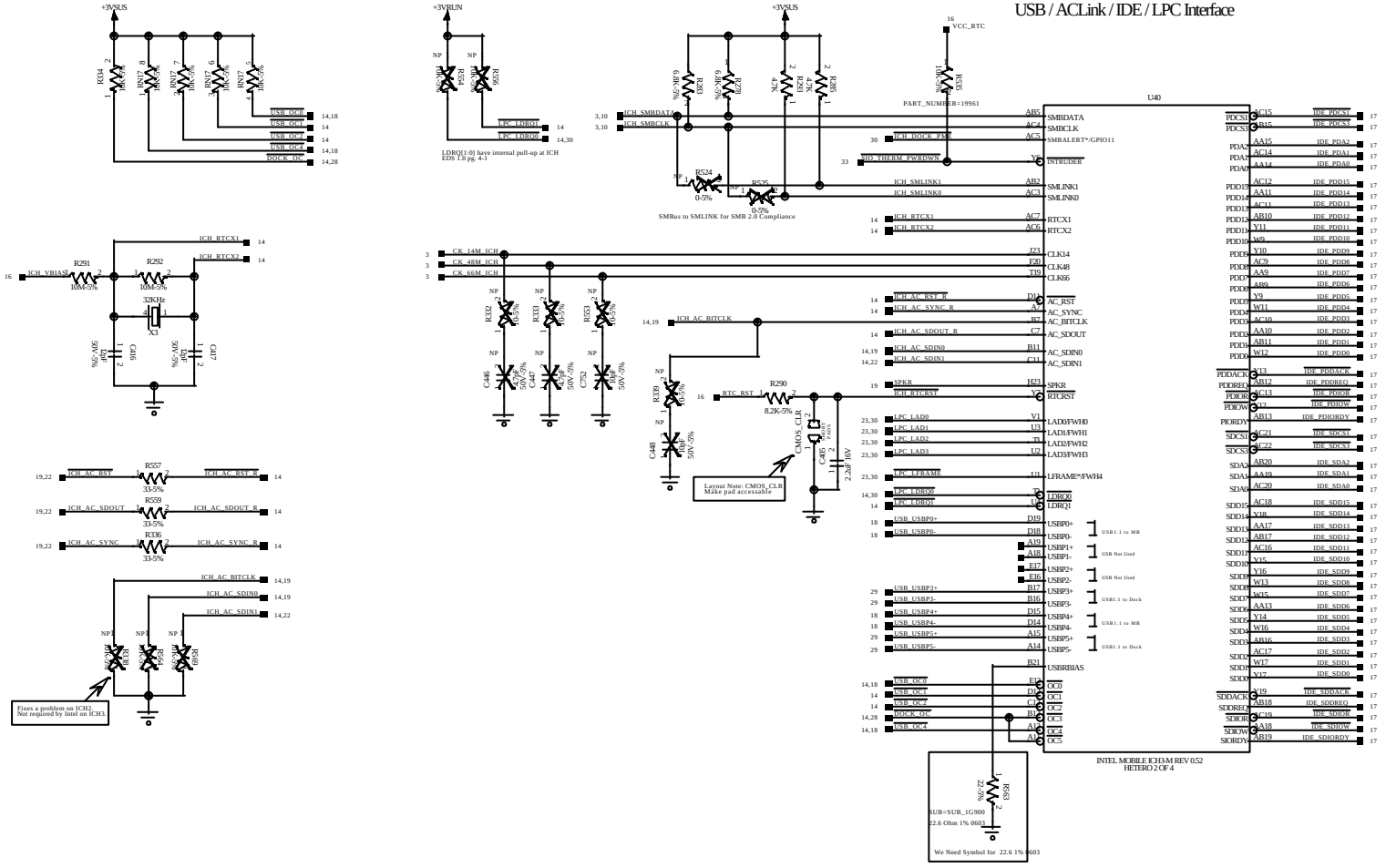

COMPUTER CORPORATION
AUSTIN,TEXAS

TITLE: SCHEMATIC, M/B LA-1221

DWG NO. 401195 REV. 4A

DATE: 11/15/02 SHEET 65 OF 102

PROPRIETARY NOTE: THIS ITEM IS THE PROPERTY OF DELL COMPUTER CORP, AUSTIN, TEXAS AND CONTAINS CONFIDENTIAL AND TRADE SECRET INFORMATION. THIS ITEM MAY NOT BE TRANSFERRED FROM THE CUSTODY OF DELL COMPUTER CORP. EXCEPT AS AUTHORIZED BY DELL COMPUTER CORP., AND THEN ONLY BY WAY OF LOAN FOR LIMITED PURPOSES. IT MUST NOT BE REPRODUCED IN WHOLE OR IN PART AND MUST BE RETURNED TO DELL COMPUTER CORP. UPON REQUEST AND IN ALL EVENTS UPON COMPLETION OF THE PURPOSE OF THE LOAN. NEITHER THIS ITEM OR THE INFORMATION IT CONTAINS MAY BE USED BY OR DISCLOSED TO PERSONS NOT HAVING A NEED FOR SUCH USE OR DISCLOSURE CONSISTENT WITH THE PURPOSE OF THE LOAN WITHOUT THE PRIOR WRITTEN CONSENT OF DELL COMPUTER CORPORATION.

ICH3-M (3/4)
PWR MGMT / LAN / USBLED Interface

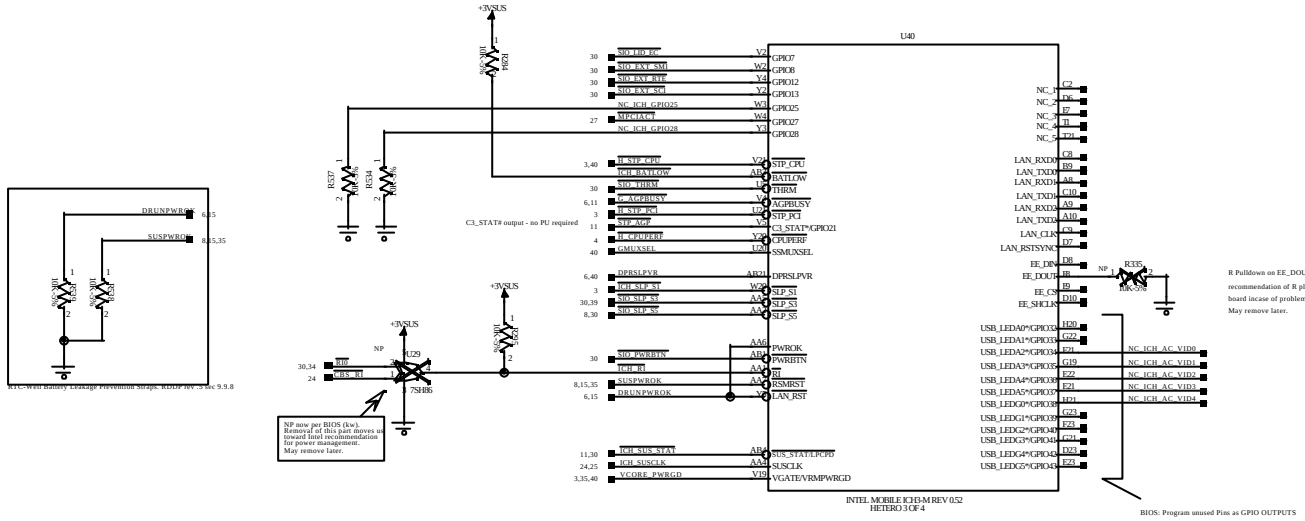

PROPRIETARY NOTE: THIS ITEM IS THE PROPERTY OF DELL COMPUTER CORP. AUSTIN, TEXAS AND CONTAINS CONFIDENTIAL AND TRADE SECRET INFORMATION. THIS ITEM MAY NOT BE TRANSFERRED FROM THE CUSTODY OF DELL COMPUTER CORP. EXCEPT AS AUTHORIZED BY DELL COMPUTER CORP., AND THEN ONLY BY WAY OF LOAN FOR LIMITED PURPOSES. IT MUST NOT BE REPRODUCED IN WHOLE OR IN PART AND MUST BE RETURNED TO DELL COMPUTER CORP. UPON REQUEST AND IN ALL EVENTS UPON COMPLETION OF THE PURPOSE OF THE LOAN. NEITHER THIS ITEM OR THE INFORMATION IT CONTAINS MAY BE USED BY OR DISCLOSED TO PERSONS NOT HAVING A NEED FOR SUCH USE OR DISCLOSURE CONSISTENT WITH THE PURPOSE OF THE LOAN WITHOUT THE PRIOR WRITTEN CONSENT OF DELL COMPUTER CORPORATION.

DELL COMPUTER CORPORATION AUSTIN,TEXAS

TITLE: SCHEMATIC, M/B LA-1221

DWG NO. 401195 REV. 4A

DATE 11/15/02 SHEET 66 OF 102

ICH3-M (4/4)
Power and Ground

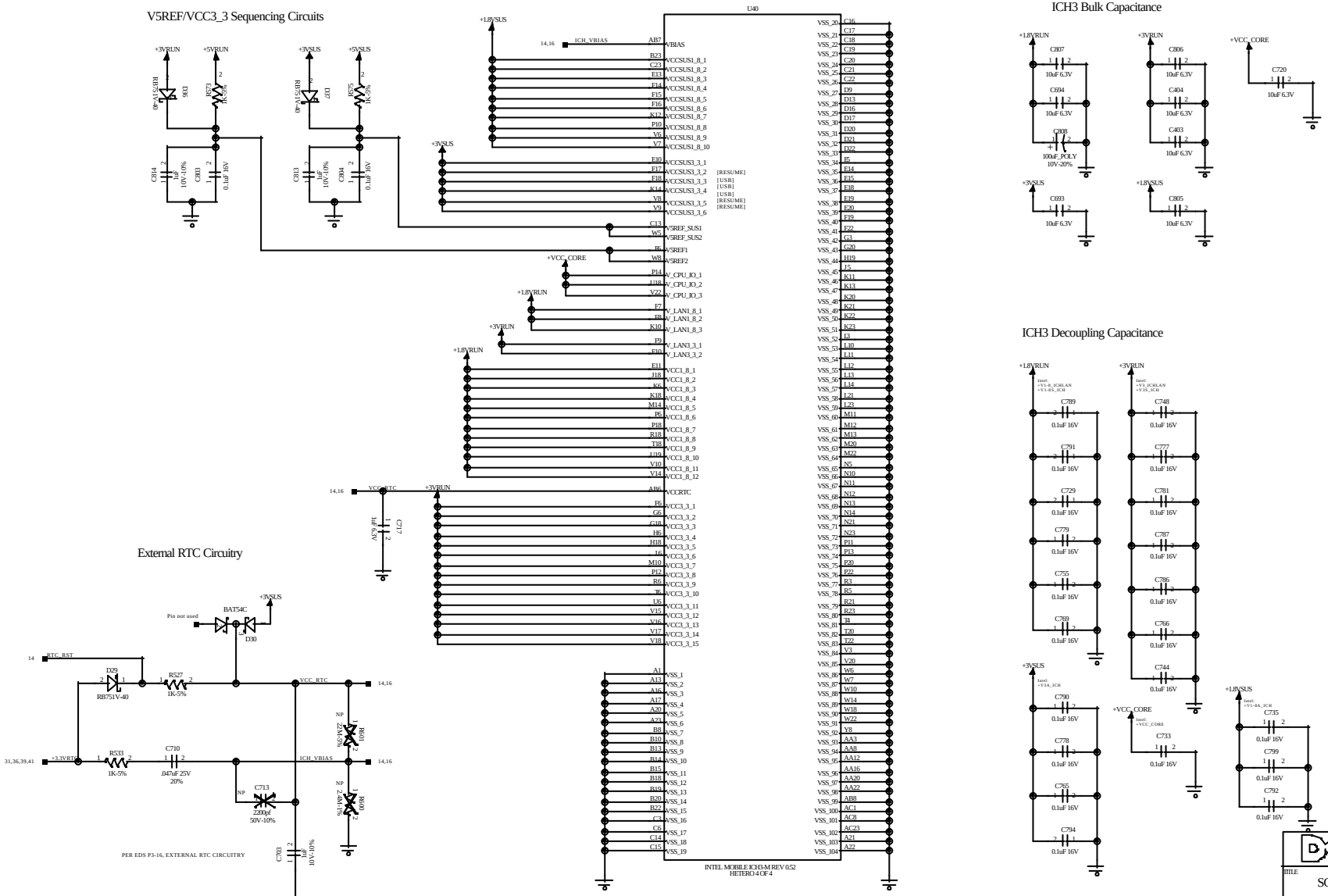

COMPUTER CORPORATION AUSTIN,TEXAS

TITLE: SCHEMATIC, M/B LA-1221

DWG NO. 401195 REV. 4A

DATE: 11/15/02 SHEET 67 OF 102

PROPRIETARY NOTE: THIS ITEM IS THE PROPERTY OF DELL COMPUTER CORP, AUSTIN, TEXAS AND CONTAINS CONFIDENTIAL AND TRADE SECRET INFORMATION. THIS ITEM MAY NOT BE TRANSFERRED FROM THE CUSTODY OF DELL COMPUTER CORP. EXCEPT AS AUTHORIZED BY DELL COMPUTER CORP., AND THEN ONLY BY WAY OF LOAN FOR LIMITED PURPOSES. IT MUST NOT BE REPRODUCED IN WHOLE OR IN PART AND MUST BE RETURNED TO DELL COMPUTER CORP. UPON REQUEST AND IN ALL EVENTS UPON COMPLETION OF THE PURPOSE OF THE LOAN. NEITHER THIS ITEM OR THE INFORMATION IT CONTAINS MAY BE USED BY OR DISCLOSED TO PERSONS NOT HAVING A NEED FOR SUCH USE OR DISCLOSURE CONSISTENT WITH THE PURPOSE OF THE LOAN WITHOUT THE PRIOR WRITTEN CONSENT OF DELL COMPUTER CORPORATION.

Modular Bay Connector

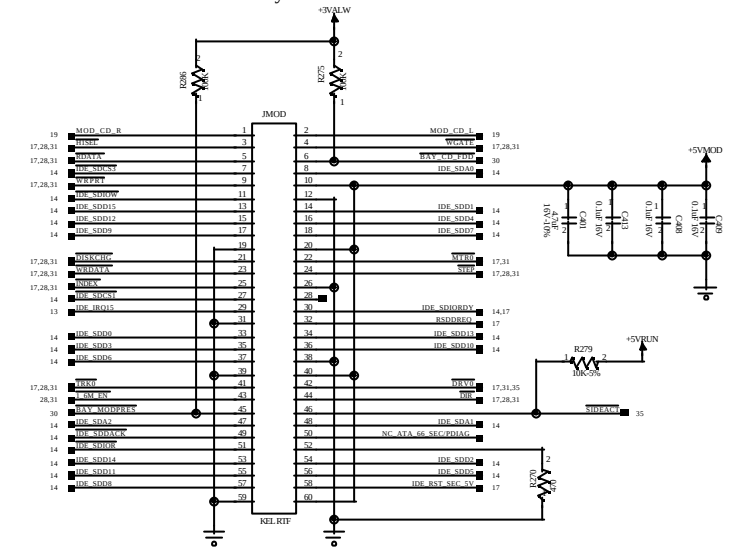

Hard Drive Connector

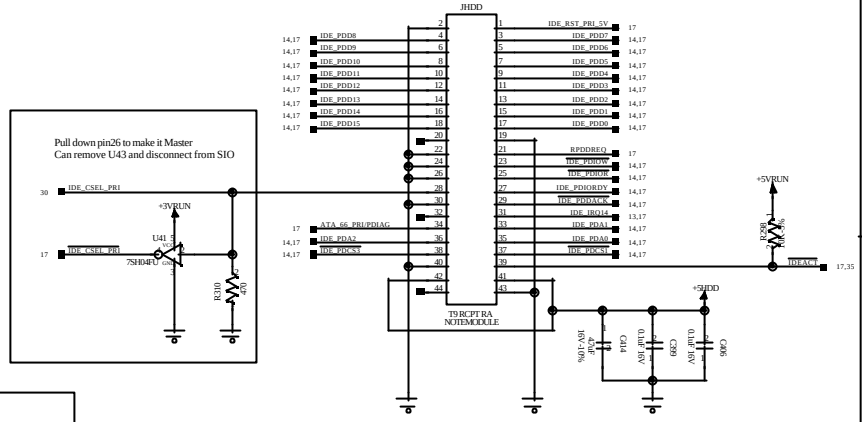

Pull down pin26 to make it Master
Can remove U43 and disconnect from SIO

Level Shifting For IDE Reset Signals

Level shifting is required in order to support Toshiba DVD-ROM drive with VIH=3.5V (Resistor allows in-circuit testability for gates)

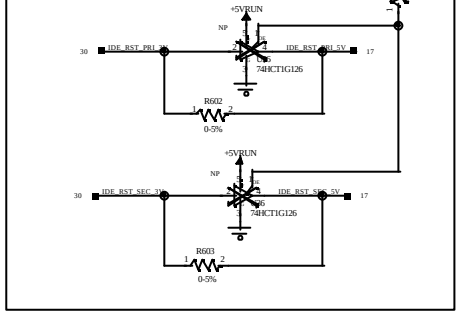

Optical Bay Connector

CD/DVD/etc.

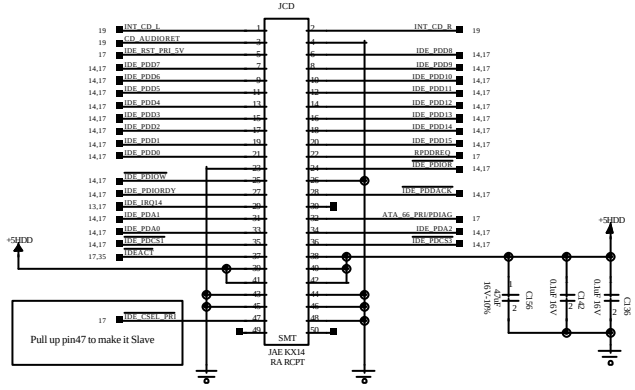

Pull up pin47 to make it Slave

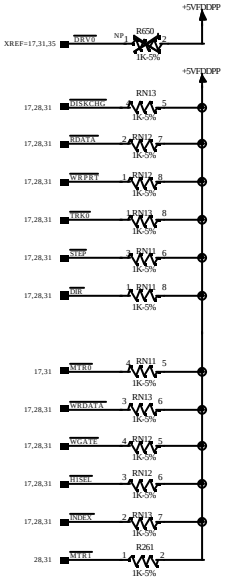

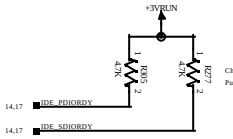

Changed power plane per Intel RDDP Ver 0.5 p.67
Pullup to 3V instead of 5V for ATA100 per Intel

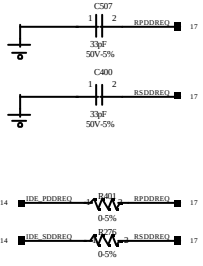

Still needed???
On Intel reference schematic for L2

Series resistance is now embedded in ICH3
Changing to 0 ohm

PROPRIETARY NOTE: THIS ITEM IS THE PROPERTY OF DELL COMPUTER CORP, AUSTIN, TEXAS AND CONTAINS CONFIDENTIAL AND TRADE SECRET INFORMATION. THIS ITEM MAY NOT BE TRANSFERRED FROM THE CUSTODY OF DELL COMPUTER CORP. EXCEPT AS AUTHORIZED BY DELL COMPUTER CORP., AND THEN ONLY BY WAY OF LOAN FOR LIMITED PURPOSES. IT MUST NOT BE REPRODUCED IN WHOLE OR IN PART AND MUST BE RETURNED TO DELL COMPUTER CORP. UPON REQUEST AND IN ALL EVENTS UPON COMPLETION OF THE PURPOSE OF THE LOAN. NEITHER THIS ITEM OR THE INFORMATION IT CONTAINS MAY BE USED BY OR DISCLOSED TO PERSONS NOT HAVING A NEED FOR SUCH USE OR DISCLOSURE CONSISTENT WITH THE PURPOSE OF THE LOAN WITHOUT THE PRIOR WRITTEN CONSENT OF DELL COMPUTER CORPORATION.

DELL COMPUTER CORPORATION AUSTIN,TEXAS

TITLE: SCHEMATIC, M/B LA-1221

DWG NO. 401195 REV. 4A

DATE: 11/15/02 SHEET 68 OF 102

Overcurrent Detection
(Internal USB Ports)

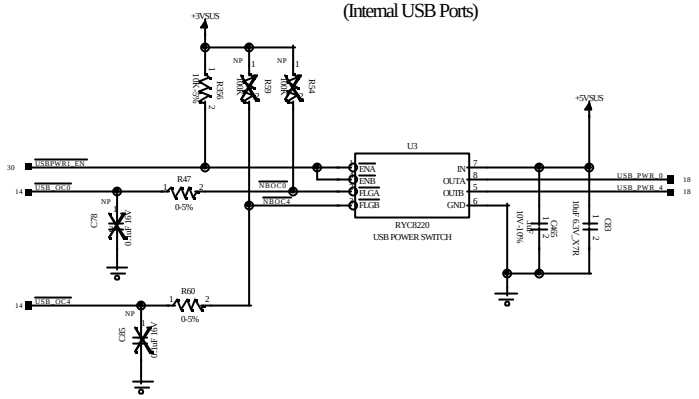

Layout Note: C72
Place a "+" character silkscreen on the board near the non-ground side of this capacitor.

C72 can be populated with either a ceramic (PN 2832P) or tantalum (PN 1033E) type capacitor

Layout Note: USB1.1
Follow RDDP's routing recommendations
INTEL USB GUIDELINE APPLIES

USB1.1 To System

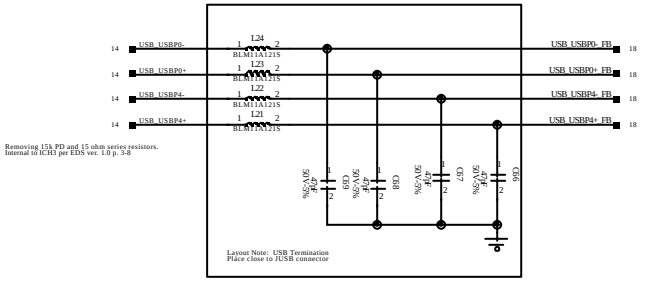

Removing 15k PD and 15 ohm series resistors.
Internal t0 ICH3 per EDS ver. 1.0 p. 3-8

USB1.1 To System
System Board USB Connectors

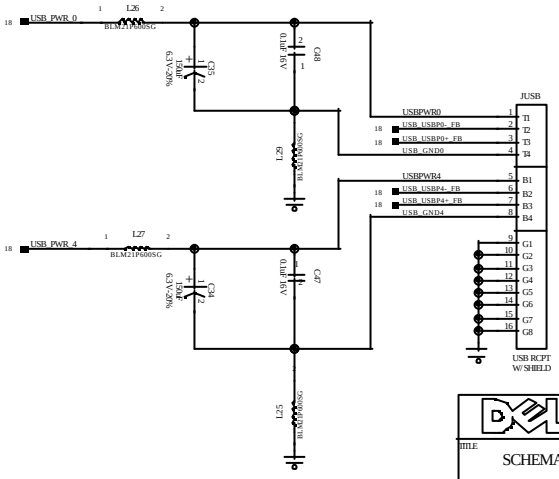

PROPRIETARY NOTE: THIS ITEM IS THE PROPERTY OF DELL COMPUTER CORP, AUSTIN, TEXAS AND CONTAINS CONFIDENTIAL AND TRADE SECRET INFORMATION. THIS ITEM MAY NOT BE TRANSFERRED FROM THE CUSTODY OF DELL COMPUTER CORP. EXCEPT AS AUTHORIZED BY DELL COMPUTER CORP., AND THEN ONLY BY WAY OF LOAN FOR LIMITED PURPOSES. IT MUST NOT BE REPRODUCED IN WHOLE OR IN PART AND MUST BE RETURNED TO DELL COMPUTER CORP. UPON REQUEST AND IN ALL EVENTS UPON COMPLETION OF THE PURPOSE OF THE LOAN. NEITHER THIS ITEM OR THE INFORMATION IT CONTAINS MAY BE USED BY OR DISCLOSED TO PERSONS NOT HAVING A NEED FOR SUCH USE OR DISCLOSURE CONSISTENT WITH THE PURPOSE OF THE LOAN WITHOUT THE PRIOR WRITTEN CONSENT OF DELL COMPUTER CORPORATION.

DELL COMPUTER CORPORATION AUSTIN,TEXAS

TITLE: SCHEMATIC, M/B LA-1221

DWG NO. 401195 REV. 4A

DATE: 11/15/02 SHEET 69 OF 102

$$V_{out} = V_{set}\left(1 + \frac{R2}{R1}\right)$$

$$V_{set} = 1.242V$$

R1=102k, R2=280k, VOUTtyp=4.65V

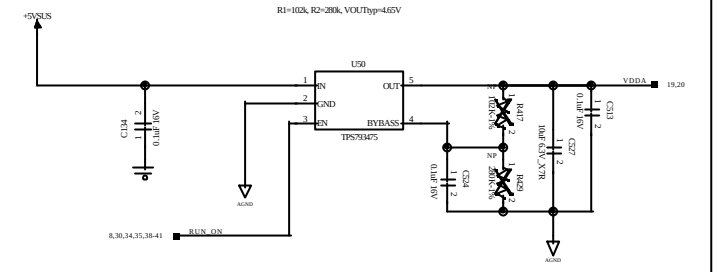

VDDA Generation (via MIC5205)

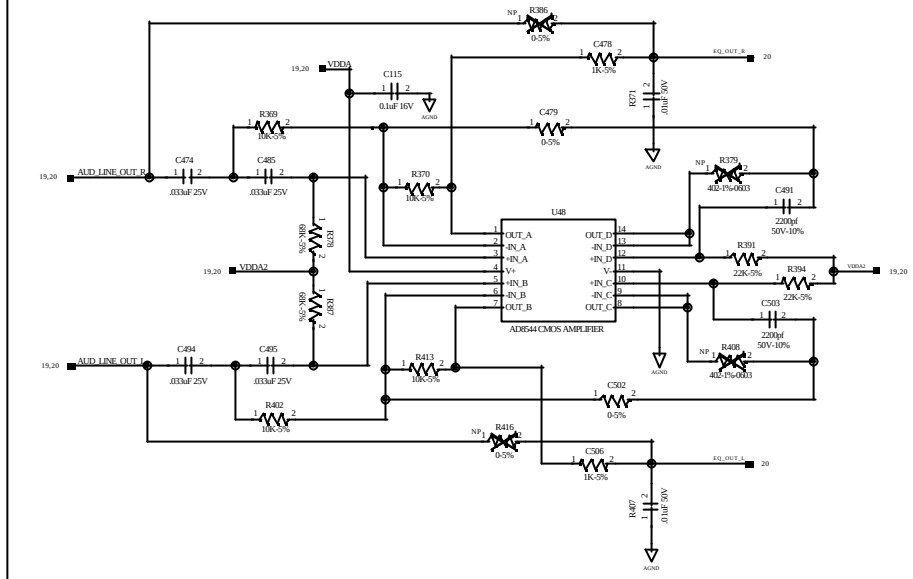

Harmon Kardon recommended EQ circuit

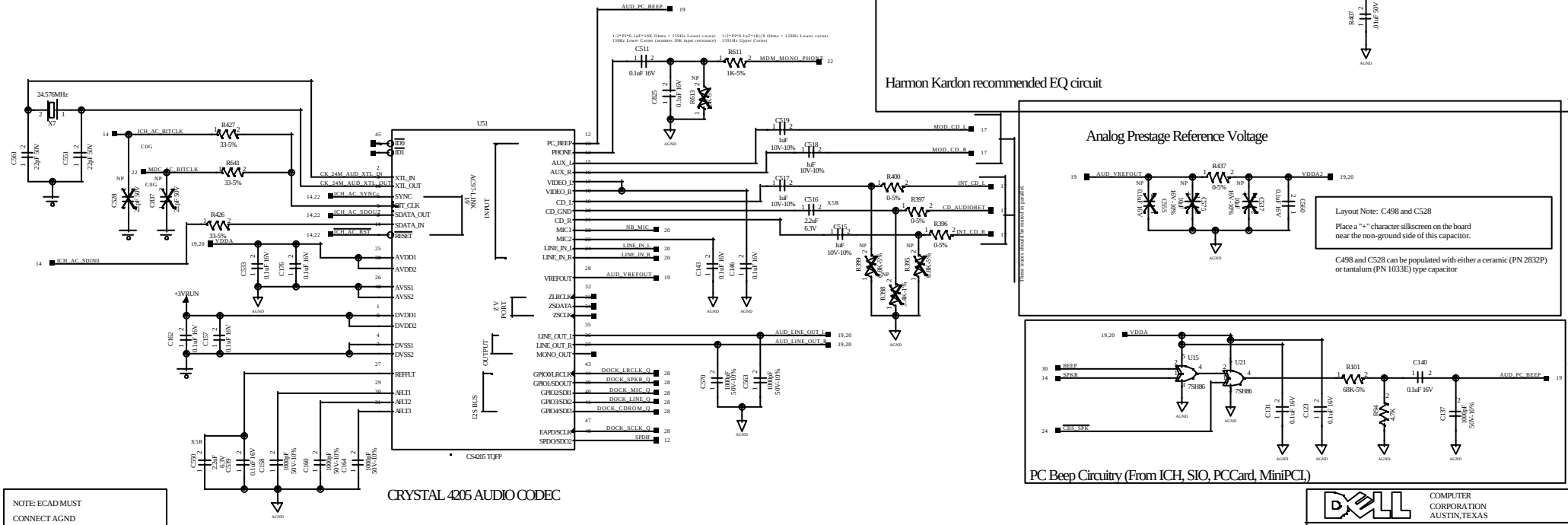

CRYSTAL 4205 AUDIO CODEC

Analog Prestage Reference Voltage

Layout Note: C498 and C528

Place a "+" character silkscreen on the board near the non-ground side of this capacitor.

C498 and C528 can be populated with either a ceramic (PN 2832P) or tantalum (PN 1033E) type capacitor

PC Beep Circuitry (From ICH, SIO, PCCard, MiniPCI,)

NOTE: ECAD MUST
CONNECT AGND
TO GND (VIA DRAWBRIDGE)!!
60 MIL TRACE AT ONE POINT
ONLY UNDER THE CODEC

PROPRIETARY NOTE: THIS ITEM IS THE PROPERTY OF DELL COMPUTER CORP, AUSTIN, TEXAS AND CONTAINS CONFIDENTIAL AND TRADE SECRET INFORMATION. THIS ITEM MAY NOT BE TRANSFERRED FROM THE CUSTODY OF DELL COMPUTER CORP. EXCEPT AS AUTHORIZED BY DELL COMPUTER CORP., AND THEN ONLY BY WAY OF LOAN FOR LIMITED PURPOSES. IT MUST NOT BE REPRODUCED IN WHOLE OR IN PART AND MUST BE RETURNED TO DELL COMPUTER CORP. UPON REQUEST AND IN ALL EVENTS UPON COMPLETION OF THE PURPOSE OF THE LOAN. NEITHER THIS ITEM OR THE INFORMATION IT CONTAINS MAY BE USED BY OR DISCLOSED TO PERSONS NOT HAVING A NEED FOR SUCH USE OR DISCLOSURE CONSISTENT WITH THE PURPOSE OF THE LOAN WITHOUT THE PRIOR WRITTEN CONSENT OF DELL COMPUTER CORPORATION.

DELL COMPUTER CORPORATION AUSTIN,TEXAS

TITLE: SCHEMATIC, M/B LA-1221

DWG NO. 401195 REV. 4A

DATE: 11/15/02 SHEET 70 OF 102

Internal Speaker Amplifier

GAIN1	GAIN	Gain(dB)
0	0	3dB
0	1	10dB
1	0	15dB
1	1	25dB

Layout Note: C497
Place a "+" character silkscreen on the board near the non-ground side of this capacitor.

C497 can be populated with either a ceramic (PN 2832P) or tantalum (PN 1033E) type capacitor

NO VIAS EXCEPT DGND UNDER PART

Headphone/Line Out Amplifier

Layout Note: C529
Place a "+" character silkscreen on the board near the non-ground side of this capacitor.

C529 can be populated with either a ceramic (PN 2832P) or tantalum (PN 1033E) type capacitor

Line output circuitry

Line input circuitry

Microphone Input Circuit

DROP THIS VIA AT THE AUDIO CODEC - AT THE GROUND PIN NEAREST THE MIC INPUT (PIN 26)

PLACE CLOSE TO AUD JACKS on BOTTOM of Board

NOTE: ECAD MUST CONNECT AGND TO GND (VIA DRAWBRIDGE)!! 60 MIL TRACE AT ONE POINT ONLY UNDER THE CODEC

PROPRIETARY NOTE: THIS ITEM IS THE PROPERTY OF DELL COMPUTER CORP, AUSTIN, TEXAS AND CONTAINS CONFIDENTIAL AND TRADE SECRET INFORMATION. THIS ITEM MAY NOT BE TRANSFERRED FROM THE CUSTODY OF DELL COMPUTER CORP. EXCEPT AS AUTHORIZED BY DELL COMPUTER CORP., AND THEN ONLY BY WAY OF LOAN FOR LIMITED PURPOSES. IT MUST NOT BE REPRODUCED IN WHOLE OR IN PART AND MUST BE RETURNED TO DELL COMPUTER CORP. UPON REQUEST AND IN ALL EVENTS UPON COMPLETION OF THE PURPOSE OF THE LOAN. NEITHER THIS ITEM OR THE INFORMATION IT CONTAINS MAY BE USED BY OR DISCLOSED TO PERSONS NOT HAVING A NEED FOR SUCH USE OR DISCLOSURE CONSISTENT WITH THE PURPOSE OF THE LOAN WITHOUT THE PRIOR WRITTEN CONSENT OF DELL COMPUTER CORPORATION.

DELL COMPUTER CORPORATION AUSTIN,TEXAS

TITLE: SCHEMATIC, M/B LA-1221

DWG NO. 401195 REV. 4A

DATE: 11/15/02 SHEET 71 OF 102

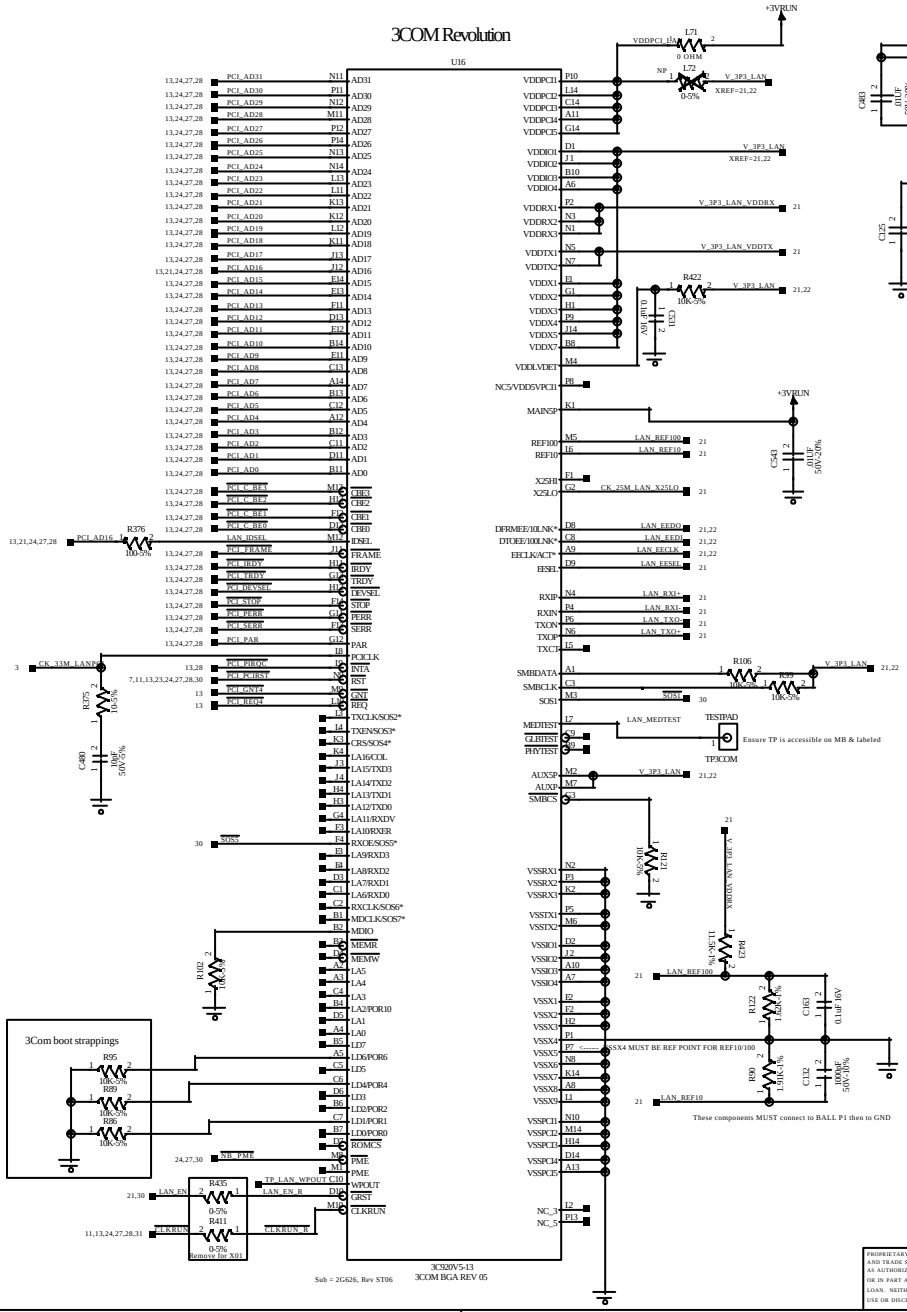

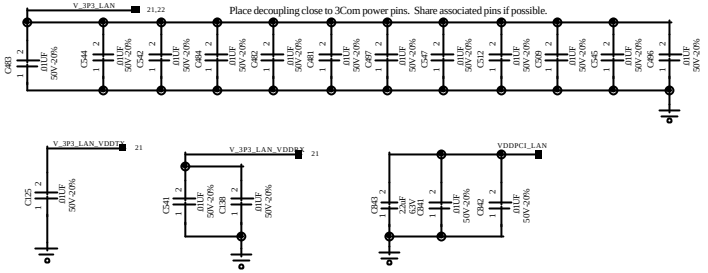

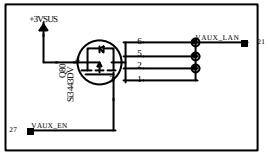

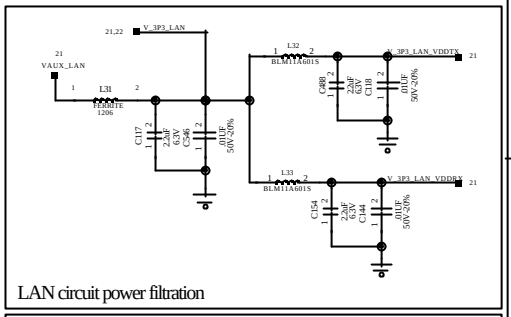

LAN circuit power filtration

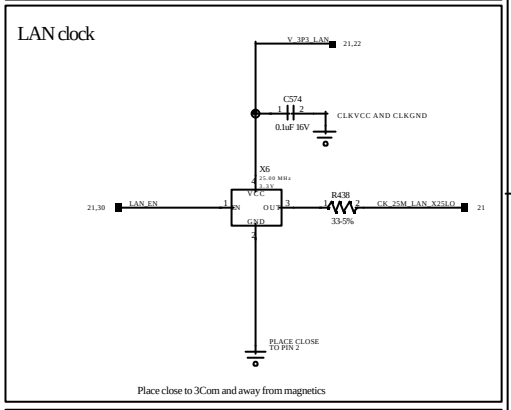

LAN clock

Place close to 3Com and away from magnetics

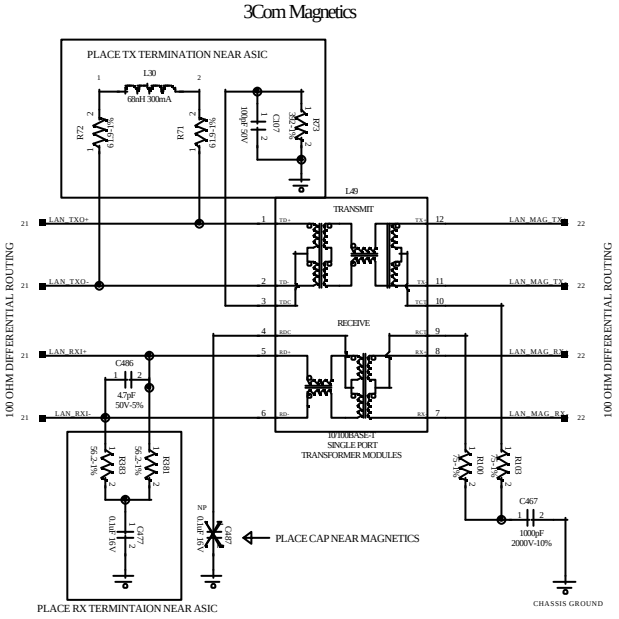

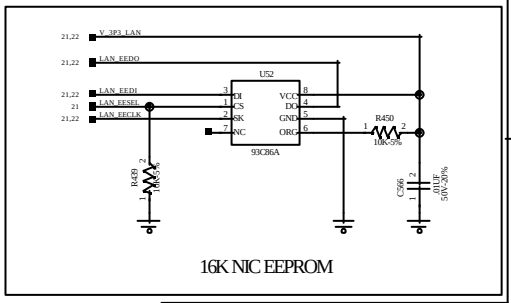

16K NIC EEPROM

DELL	COMPUTER CORPORATION AUSTIN,TEXAS
TITLE	SCHEMATIC, M/B LA-1221
DWG NO.	401195
REV.	4A
DATE	11/15/02
SHEET	72 OF 102

PROPRIETARY NOTE: THIS ITEM IS THE PROPERTY OF DELL COMPUTER CORP, AUSTIN, TEXAS AND CONTAINS CONFIDENTIAL AND TRADE SECRET INFORMATION. THIS ITEM MAY NOT BE TRANSFERRED FROM THE CUSTODY OF DELL COMPUTER CORP. EXCEPT AS AUTHORIZED BY DELL COMPUTER CORP., AND THEN ONLY BY WAY OF LOAN FOR LIMITED PURPOSES. IT MUST NOT BE REPRODUCED IN WHOLE OR IN PART AND MUST BE RETURNED TO DELL COMPUTER CORP. UPON REQUEST AND IN ALL EVENTS UPON COMPLETION OF THE PURPOSE OF THE LOAN. NEITHER THIS ITEM OR THE INFORMATION IT CONTAINS MAY BE USED BY OR DISCLOSED TO PERSONS NOT HAVING A NEED FOR SUCH USE OR DISCLOSURE CONSISTENT WITH THE PURPOSE OF THE LOAN WITHOUT THE PRIOR WRITTEN CONSENT OF DELL COMPUTER CORPORATION.

NIC ESD DIODE ARRAY

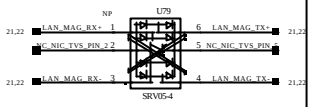

AC97 Bit Clock Buffer

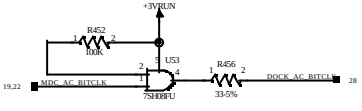

Place buffer near the MDC connector

LAN CONNECTOR (MB TO RJ-45)

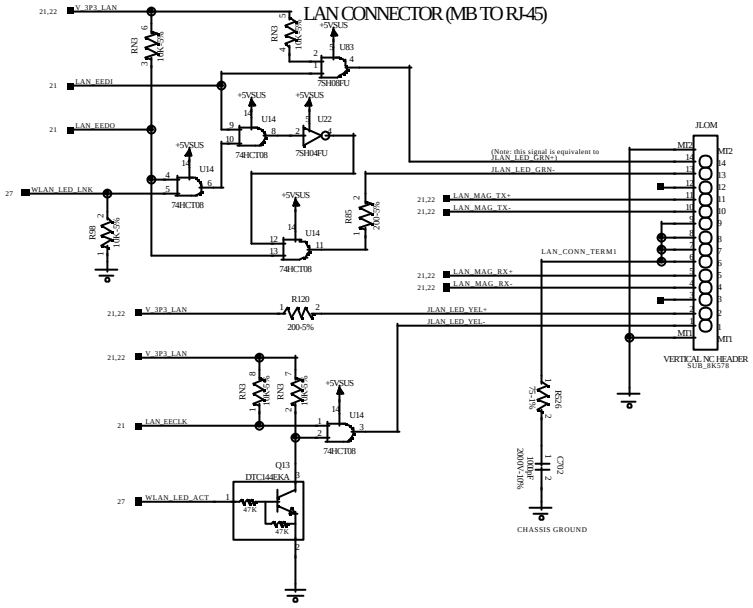

Soft Modem MDC Connector

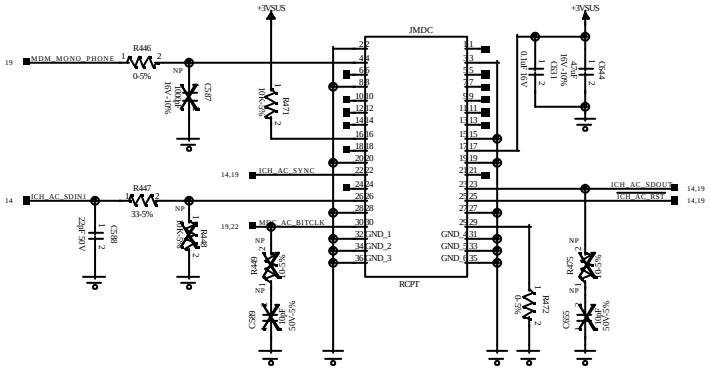

PROPRIETARY NOTE: THIS ITEM IS THE PROPERTY OF DELL COMPUTER CORP, AUSTIN, TEXAS AND CONTAINS CONFIDENTIAL AND TRADE SECRET INFORMATION. THIS ITEM MAY NOT BE TRANSFERRED FROM THE CUSTODY OF DELL COMPUTER CORP. EXCEPT AS AUTHORIZED BY DELL COMPUTER CORP., AND THEN ONLY BY WAY OF LOAN FOR LIMITED PURPOSES. IT MUST NOT BE REPRODUCED IN WHOLE OR IN PART AND MUST BE RETURNED TO DELL COMPUTER CORP. UPON REQUEST AND IN ALL EVENTS UPON COMPLETION OF THE PURPOSE OF THE LOAN. NEITHER THIS ITEM OR THE INFORMATION IT CONTAINS MAY BE USED BY OR DISCLOSED TO PERSONS NOT HAVING A NEED FOR SUCH USE OR DISCLOSURE CONSISTENT WITH THE PURPOSE OF THE LOAN WITHOUT THE PRIOR WRITTEN CONSENT OF DELL COMPUTER CORPORATION.

DELL COMPUTER CORPORATION AUSTIN,TEXAS

TITLE: SCHEMATIC, M/B LA-1221

DWG NO. 401195 REV. 4A

DATE: 11/15/02 SHEET 73 OF 102

Dual Footprint Firmware Hub (FWH) - System BIOS

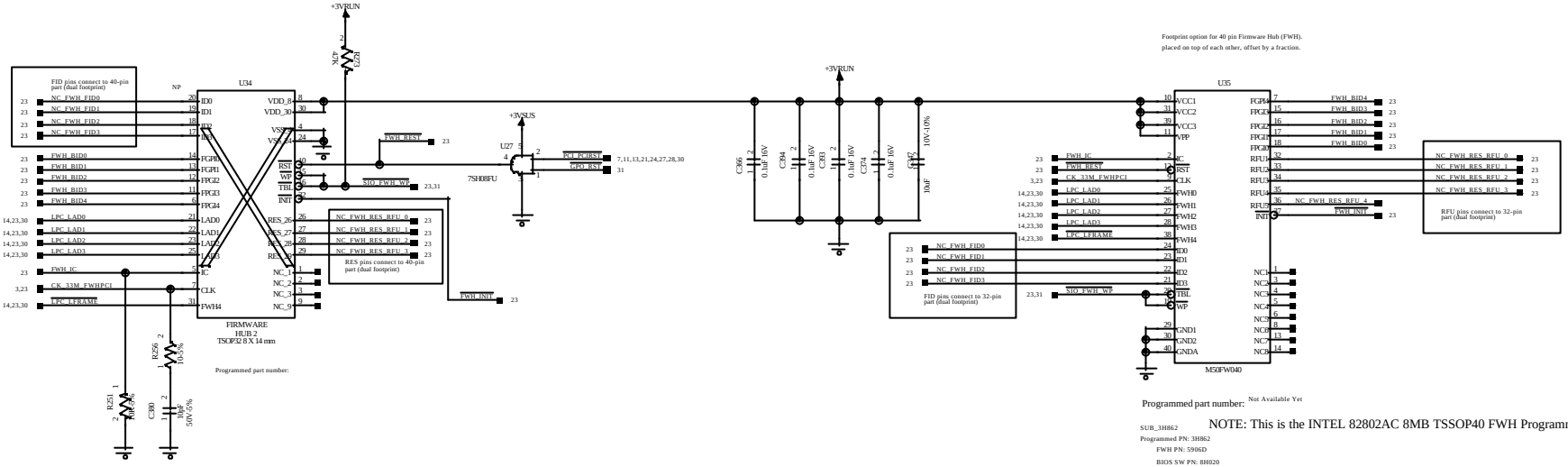

Programmed part number: Not Available Yet

NOTE: This is the INTEL 82802AC 8MB TSSOP40 FWH Programmed PN

SUB_3H862
Programmed PN: 3H862
FWH PN: 5906D
BIOS SW PN: 8H020

4Mb Part
FWH PN: 6C739

Level shifter for INIT#

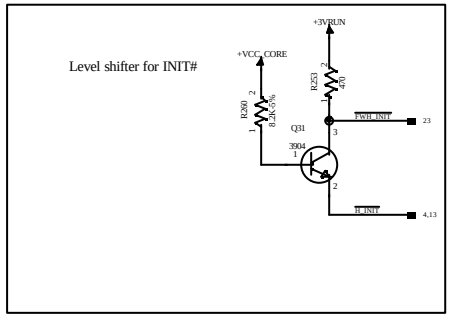

Board Rev Identifier

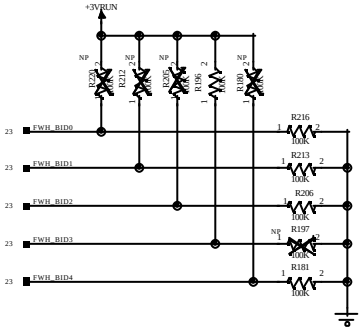

PWB REV.	BID4	BID3	BID2	BID1	BID0
x00-00	0	0	0	0	0
x01-00	0	0	0	0	1
x02-00	0	0	0	1	0
x03-00	0	0	0	1	1
X04-00	0	0	1	0	0
X05-00	0	0	1	0	1

PROPRIETARY NOTE: THIS ITEM IS THE PROPERTY OF DELL COMPUTER CORP, AUSTIN, TEXAS AND CONTAINS CONFIDENTIAL AND TRADE SECRET INFORMATION. THIS ITEM MAY NOT BE TRANSFERRED FROM THE CUSTODY OF DELL COMPUTER CORP. EXCEPT AS AUTHORIZED BY DELL COMPUTER CORP., AND THEN ONLY BY WAY OF LOAN FOR LIMITED PURPOSES. IT MUST NOT BE REPRODUCED IN WHOLE OR IN PART AND MUST BE RETURNED TO DELL COMPUTER CORP. UPON REQUEST AND IN ALL EVENTS UPON COMPLETION OF THE PURPOSE OF THE LOAN. NEITHER THIS ITEM OR THE INFORMATION IT CONTAINS MAY BE USED BY OR DISCLOSED TO PERSONS NOT HAVING A NEED FOR SUCH USE OR DISCLOSURE CONSISTENT WITH THE PURPOSE OF THE LOAN WITHOUT THE PRIOR WRITTEN CONSENT OF DELL COMPUTER CORPORATION.

DELL COMPUTER CORPORATION AUSTIN,TEXAS

TITLE: SCHEMATIC, M/B LA-1221

DWG NO. 401195 REV. 4A

DATE: 11/15/02 SHEET 74 OF 102

CardBus Controller (1/2)

PCI / PHY Interface

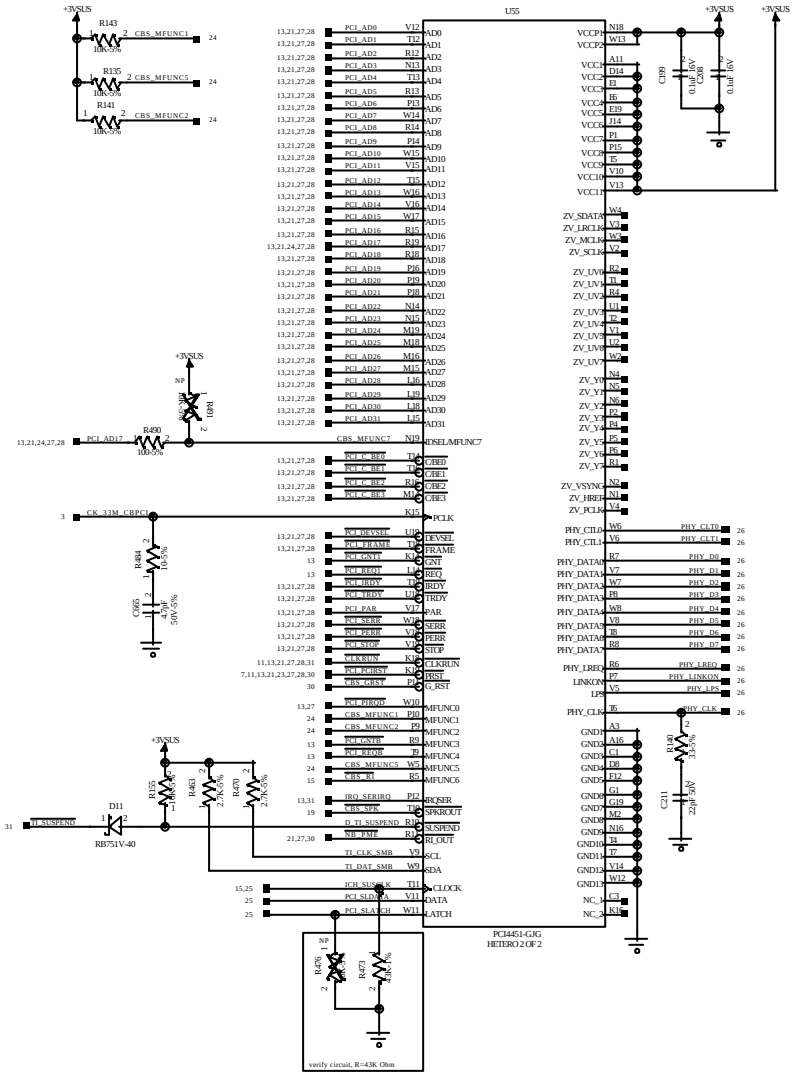

CardBus Controller (2/2)

PC Card Interface

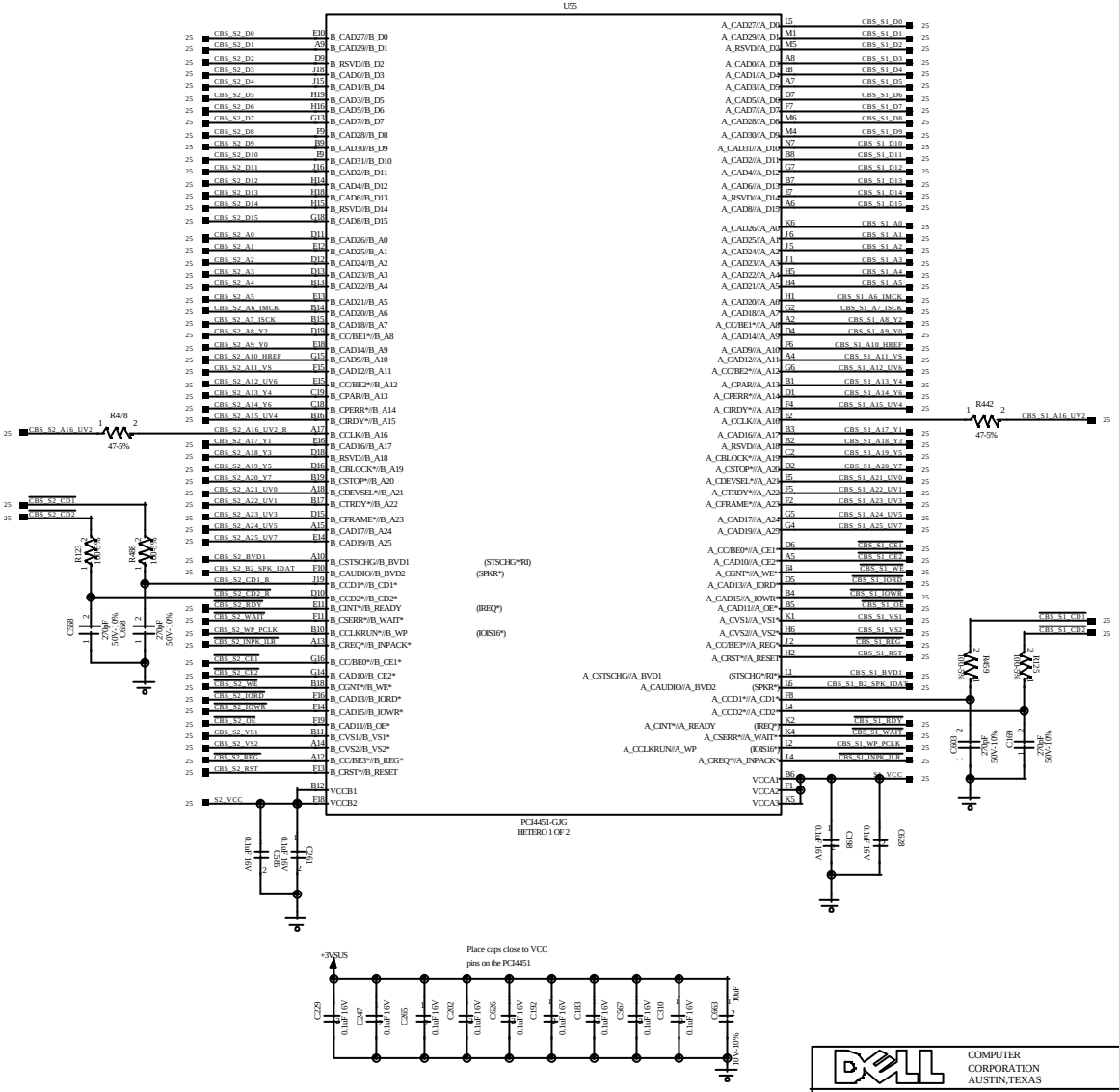

PROPRIETARY NOTE: THIS ITEM IS THE PROPERTY OF DELL COMPUTER CORP, AUSTIN, TEXAS AND CONTAINS CONFIDENTIAL AND TRADE SECRET INFORMATION. THIS ITEM MAY NOT BE TRANSFERRED FROM THE CUSTODY OF DELL COMPUTER CORP. EXCEPT AS AUTHORIZED BY DELL COMPUTER CORP., AND THEN ONLY BY WAY OF LOAN FOR LIMITED PURPOSES. IT MUST NOT BE REPRODUCED IN WHOLE OR IN PART AND MUST BE RETURNED TO DELL COMPUTER CORP. UPON REQUEST AND IN ALL EVENTS UPON COMPLETION OF THE PURPOSE OF THE LOAN. NEITHER THIS ITEM OR THE INFORMATION IT CONTAINS MAY BE USED BY OR DISCLOSED TO PERSONS NOT HAVING A NEED FOR SUCH USE OR DISCLOSURE CONSISTENT WITH THE PURPOSE OF THE LOAN WITHOUT THE PRIOR WRITTEN CONSENT OF DELL COMPUTER CORPORATION.

DELL COMPUTER CORPORATION AUSTIN,TEXAS

TITLE: SCHEMATIC, M/B LA-1221

DWG NO. 401195 REV. 4A

DATE: 11/15/02 SHEET 75 OF 102

PC Card Slot Voltage Selector

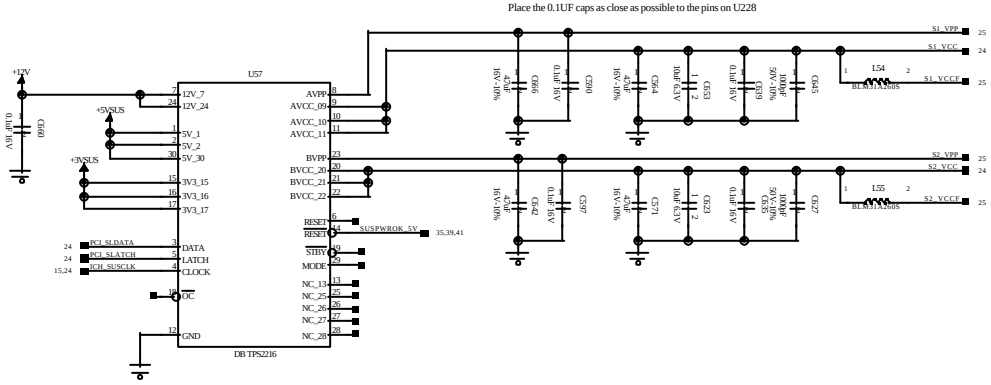

PC Card Connectors

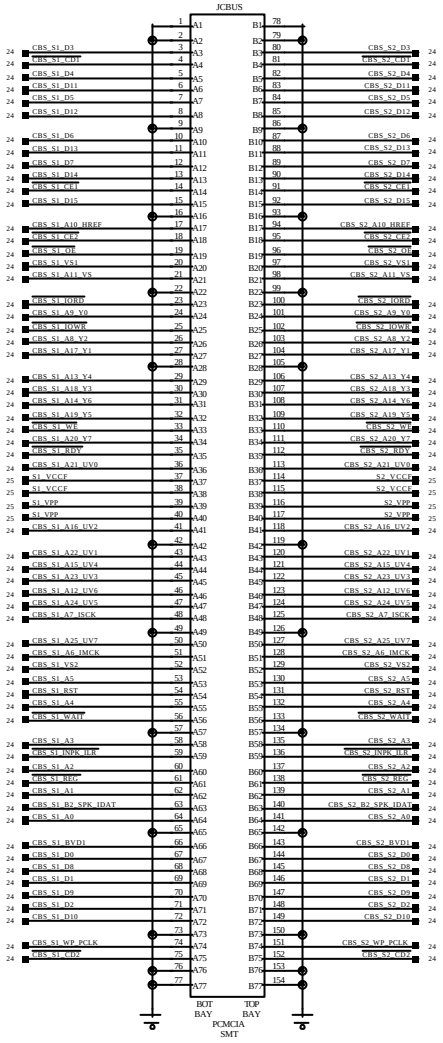

PROPRIETARY NOTE: THIS ITEM IS THE PROPERTY OF DELL COMPUTER CORP, AUSTIN, TEXAS AND CONTAINS CONFIDENTIAL AND TRADE SECRET INFORMATION. THIS ITEM MAY NOT BE TRANSFERRED FROM THE CUSTODY OF DELL COMPUTER CORP. EXCEPT AS AUTHORIZED BY DELL COMPUTER CORP., AND THEN ONLY BY WAY OF LOAN FOR LIMITED PURPOSES. IT MUST NOT BE REPRODUCED IN WHOLE OR IN PART AND MUST BE RETURNED TO DELL COMPUTER CORP. UPON REQUEST AND IN ALL EVENTS UPON COMPLETION OF THE PURPOSE OF THE LOAN. NEITHER THIS ITEM OR THE INFORMATION IT CONTAINS MAY BE USED BY OR DISCLOSED TO PERSONS NOT HAVING A NEED FOR SUCH USE OR DISCLOSURE CONSISTENT WITH THE PURPOSE OF THE LOAN WITHOUT THE PRIOR WRITTEN CONSENT OF DELL COMPUTER CORPORATION.

DELL COMPUTER CORPORATION AUSTIN,TEXAS

TITLE: SCHEMATIC, M/B LA-1221

DWG NO. 401195 REV. 4A

DATE: 11/15/02 SHEET 76 OF 102

IEEE 1394 Phy

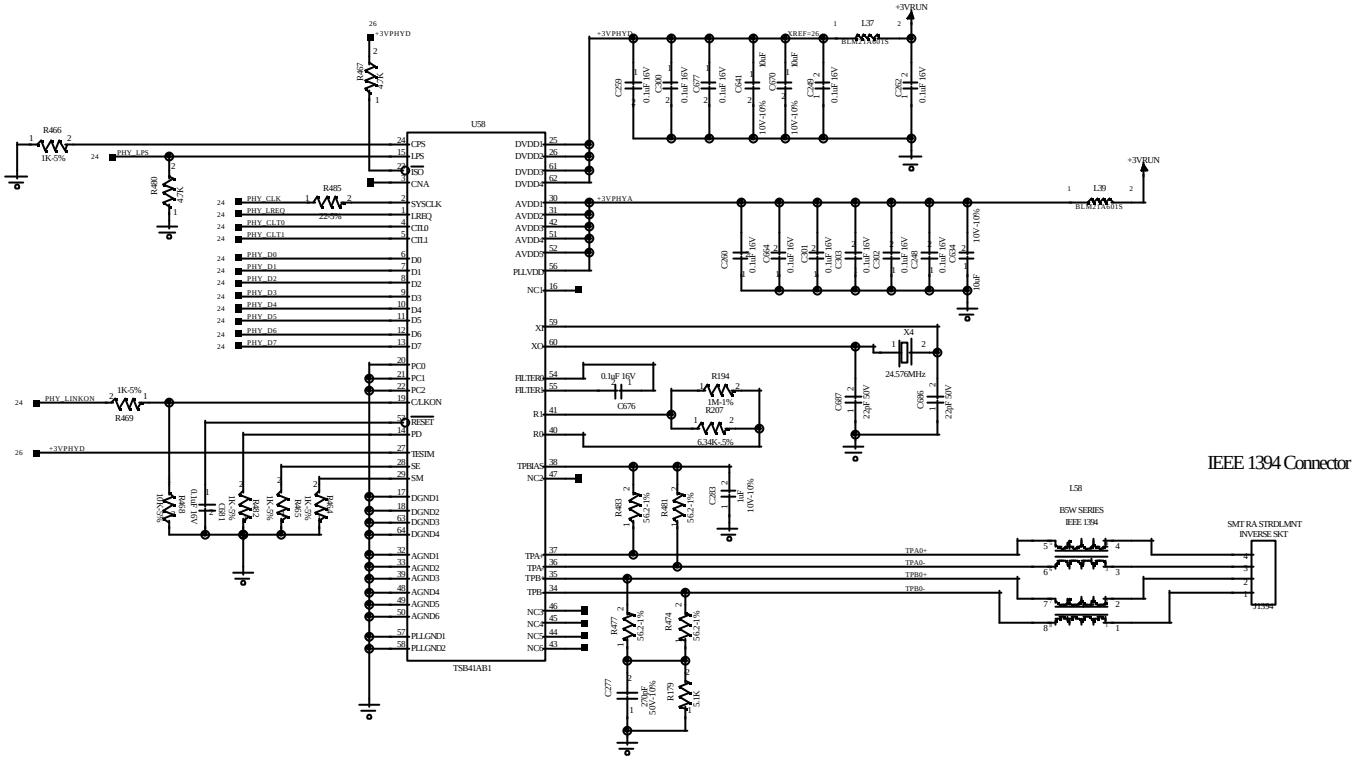

IEEE 1394 Connector

PROPRIETARY NOTE: THIS ITEM IS THE PROPERTY OF DELL COMPUTER CORP, AUSTIN, TEXAS AND CONTAINS CONFIDENTIAL AND TRADE SECRET INFORMATION. THIS ITEM MAY NOT BE TRANSFERRED FROM THE CUSTODY OF DELL COMPUTER CORP. EXCEPT AS AUTHORIZED BY DELL COMPUTER CORP., AND THEN ONLY BY WAY OF LOAN FOR LIMITED PURPOSES. IT MUST NOT BE REPRODUCED IN WHOLE OR IN PART AND MUST BE RETURNED TO DELL COMPUTER CORP. UPON REQUEST AND IN ALL EVENTS UPON COMPLETION OF THE PURPOSE OF THE LOAN. NEITHER THIS ITEM OR THE INFORMATION IT CONTAINS MAY BE USED BY OR DISCLOSED TO PERSONS NOT HAVING A NEED FOR SUCH USE OR DISCLOSURE CONSISTENT WITH THE PURPOSE OF THE LOAN WITHOUT THE PRIOR WRITTEN CONSENT OF DELL COMPUTER CORPORATION.

DELL COMPUTER CORPORATION AUSTIN,TEXAS

TITLE: SCHEMATIC, M/B LA-1221

DWG NO. 401195 REV. 4A

DATE: 11/15/02 SHEET 77 OF 102

Layout Note: C699

Place a "+" character silkscreen on the board near the non-ground side of this capacitor.

C699 can be populated with either a ceramic (PN 2832P) or tantalum (PN 1033E) type capacitor

Mini PCI Connector

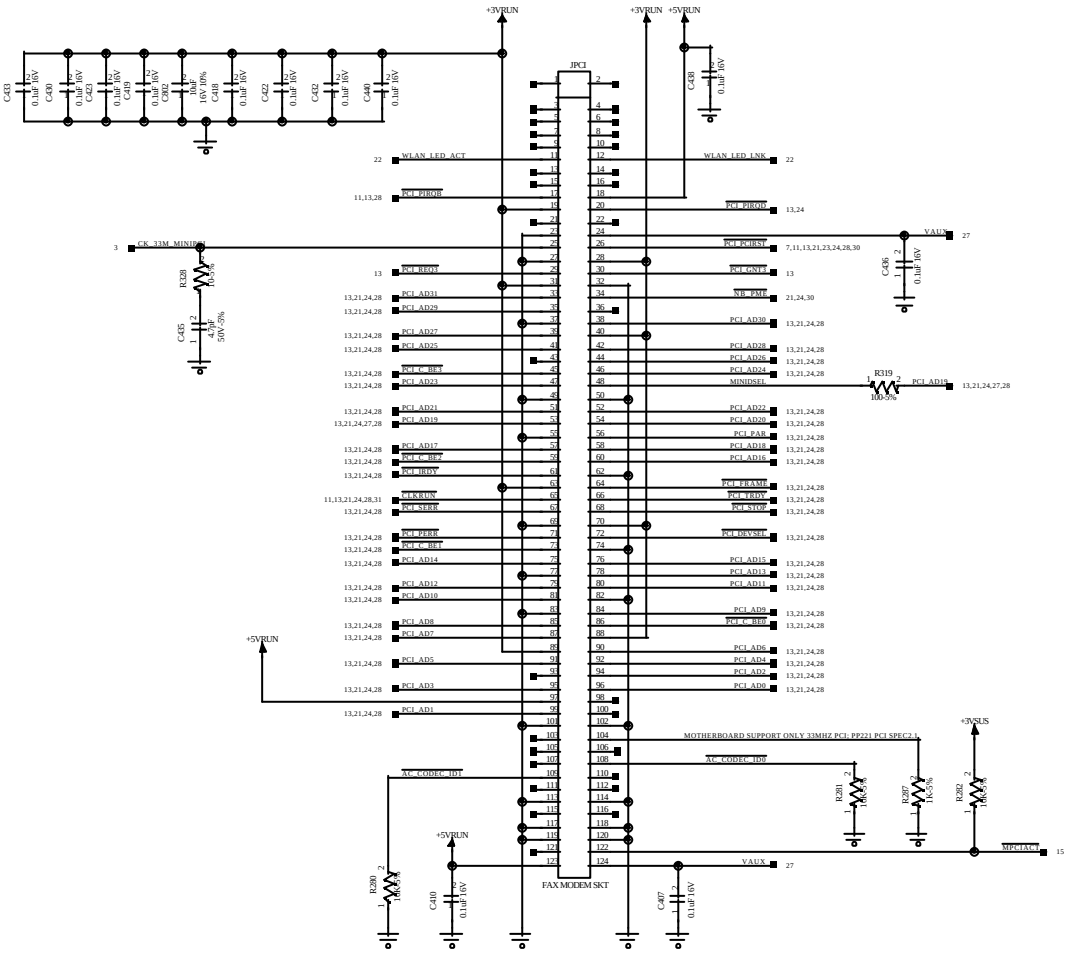

Note: Pins 3 through 16 of JPCI are not being used per the mini-pci spec.
THIS BOARD DOESNOT SUPPORT WAKE UP FROM MINIPCI CARD WHILE IN SHUTDOWN
3.3aux is connected to 3.3SUS

Power requirement total 2W
+5VRUN =100mA
3.3VAUX<375mAMPMAX

VAUX Source

Circuit Configured as Always On with SUS

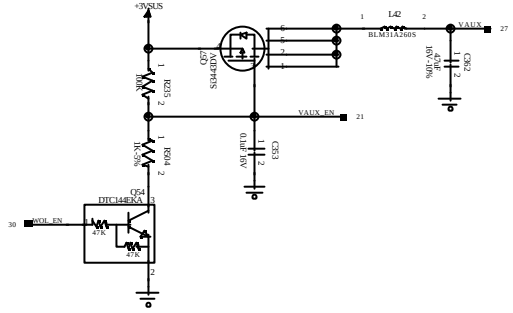

PROPRIETARY NOTE: THIS ITEM IS THE PROPERTY OF DELL COMPUTER CORP, AUSTIN, TEXAS AND CONTAINS CONFIDENTIAL AND TRADE SECRET INFORMATION. THIS ITEM MAY NOT BE TRANSFERRED FROM THE CUSTODY OF DELL COMPUTER CORP. EXCEPT AS AUTHORIZED BY DELL COMPUTER CORP., AND THEN ONLY BY WAY OF LOAN FOR LIMITED PURPOSES. IT MUST NOT BE REPRODUCED IN WHOLE OR IN PART AND MUST BE RETURNED TO DELL COMPUTER CORP. UPON REQUEST AND IN ALL EVENTS UPON COMPLETION OF THE PURPOSE OF THE LOAN. NEITHER THIS ITEM OR THE INFORMATION IT CONTAINS MAY BE USED BY OR DISCLOSED TO PERSONS NOT HAVING A NEED FOR SUCH USE OR DISCLOSURE CONSISTENT WITH THE PURPOSE OF THE LOAN WITHOUT THE PRIOR WRITTEN CONSENT OF DELL COMPUTER CORPORATION.

DELL COMPUTER CORPORATION AUSTIN,TEXAS

TITLE: SCHEMATIC, M/B LA-1221

DWG NO. 401195 REV. 4A

DATE: 11/15/02 SHEET 78 OF 102

Dock PCI Bus Buffers

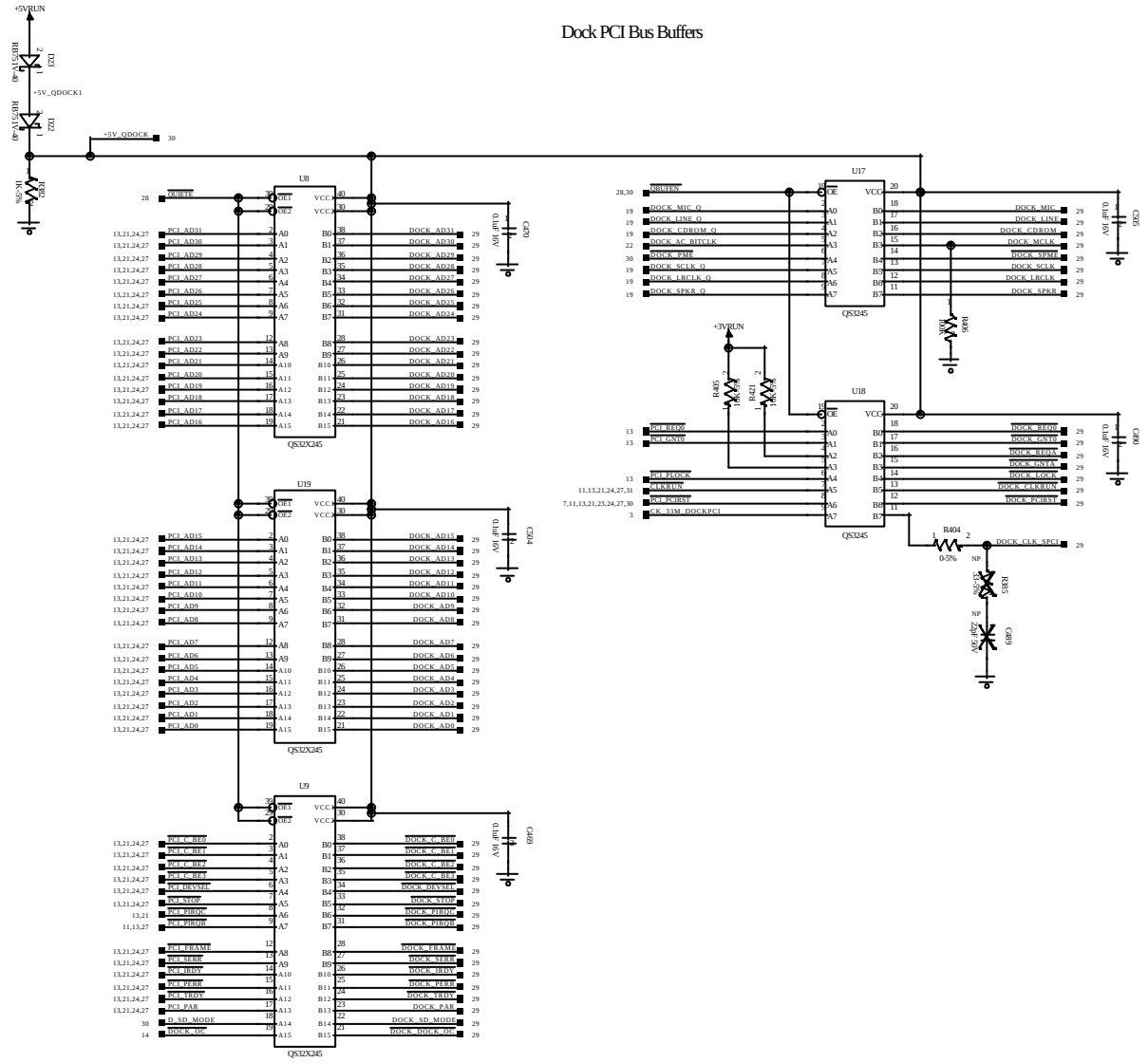

Dock FD Buffer

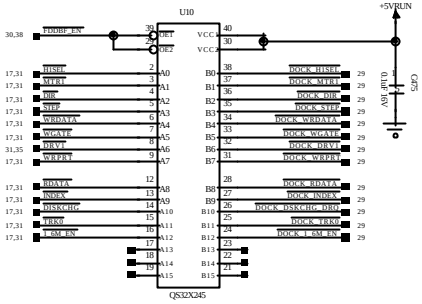

Dock Buffer Enable

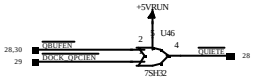

PROPRIETARY NOTE: THIS ITEM IS THE PROPERTY OF DELL COMPUTER CORP, AUSTIN, TEXAS AND CONTAINS CONFIDENTIAL AND TRADE SECRET INFORMATION. THIS ITEM MAY NOT BE TRANSFERRED FROM THE CUSTODY OF DELL COMPUTER CORP. EXCEPT AS AUTHORIZED BY DELL COMPUTER CORP., AND THEN ONLY BY WAY OF LOAN FOR LIMITED PURPOSES. IT MUST NOT BE REPRODUCED IN WHOLE OR IN PART AND MUST BE RETURNED TO DELL COMPUTER CORP. UPON REQUEST AND IN ALL EVENTS UPON COMPLETION OF THE PURPOSE OF THE LOAN. NEITHER THIS ITEM OR THE INFORMATION IT CONTAINS MAY BE USED BY OR DISCLOSED TO PERSONS NOT HAVING A NEED FOR SUCH USE OR DISCLOSURE CONSISTENT WITH THE PURPOSE OF THE LOAN WITHOUT THE PRIOR WRITTEN CONSENT OF DELL COMPUTER CORPORATION.

DELL COMPUTER CORPORATION AUSTIN,TEXAS

TITLE: SCHEMATIC, M/B LA-1221

DWG NO. 401195 REV. 4A

DATE: 11/15/02 SHEET 79 OF 102

Dock Connector

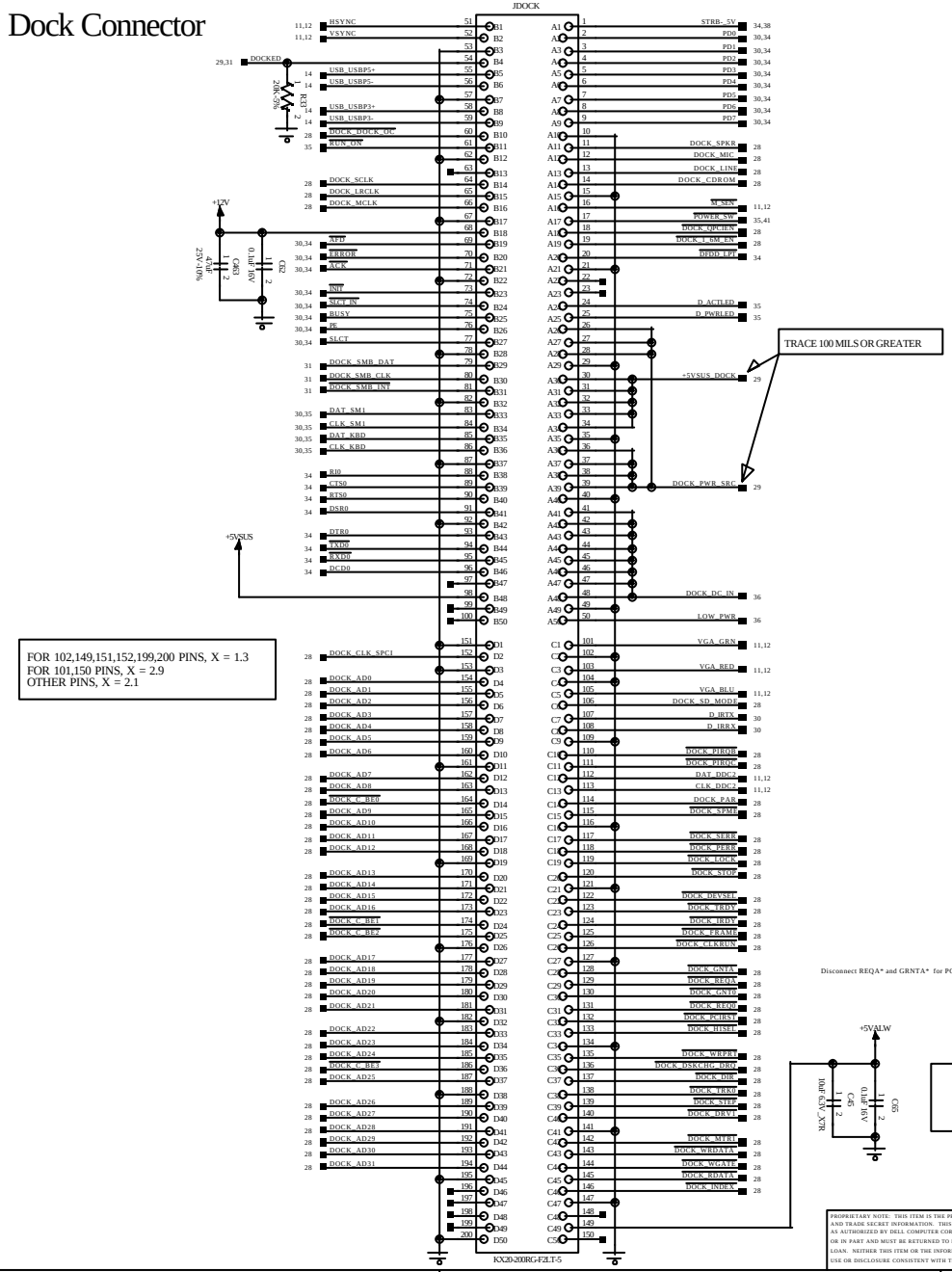

+5VSUS_DOCK Source

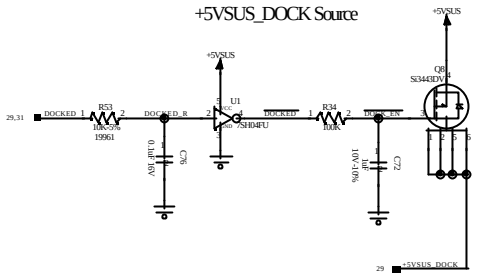

DOCK_PWR_SRC Source

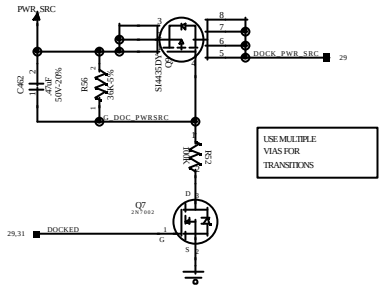

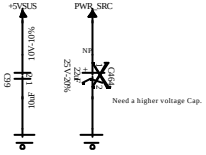

PROPRIETARY NOTE: THIS ITEM IS THE PROPERTY OF DELL COMPUTER CORP, AUSTIN, TEXAS AND CONTAINS CONFIDENTIAL AND TRADE SECRET INFORMATION. THIS ITEM MAY NOT BE TRANSFERRED FROM THE CUSTODY OF DELL COMPUTER CORP. EXCEPT AS AUTHORIZED BY DELL COMPUTER CORP., AND THEN ONLY BY WAY OF LOAN FOR LIMITED PURPOSES. IT MUST NOT BE REPRODUCED IN WHOLE OR IN PART AND MUST BE RETURNED TO DELL COMPUTER CORP. UPON REQUEST AND IN ALL EVENTS UPON COMPLETION OF THE PURPOSE OF THE LOAN. NEITHER THIS ITEM OR THE INFORMATION IT CONTAINS MAY BE USED BY OR DISCLOSED TO PERSONS NOT HAVING A NEED FOR SUCH USE OR DISCLOSURE CONSISTENT WITH THE PURPOSE OF THE LOAN WITHOUT THE PRIOR WRITTEN CONSENT OF DELL COMPUTER CORPORATION.

DELL COMPUTER CORPORATION AUSTIN,TEXAS

TITLE: SCHEMATIC, M/B LA-1221

DWG NO.	401195	REV.	4A
DATE:	11/15/02	SHEET	80 OF 102

Kahuna Re-flash Setup

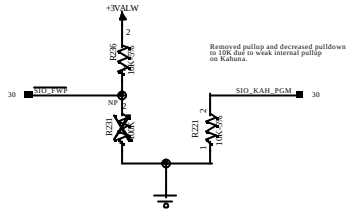

Super I/O Controller (Kahuna 1/2)

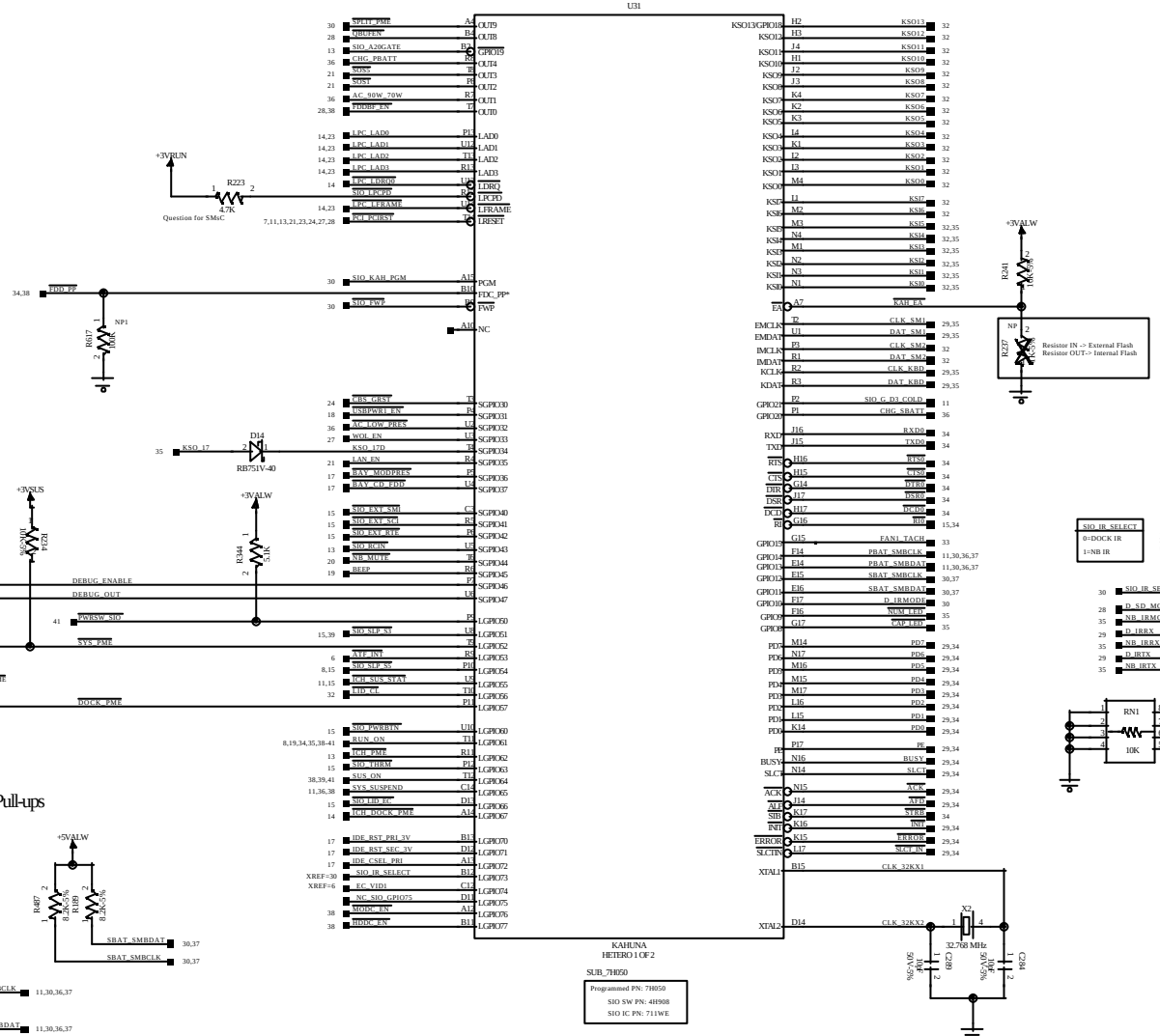

IRTX Level Shifter

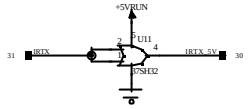

Kahuna Debug Port

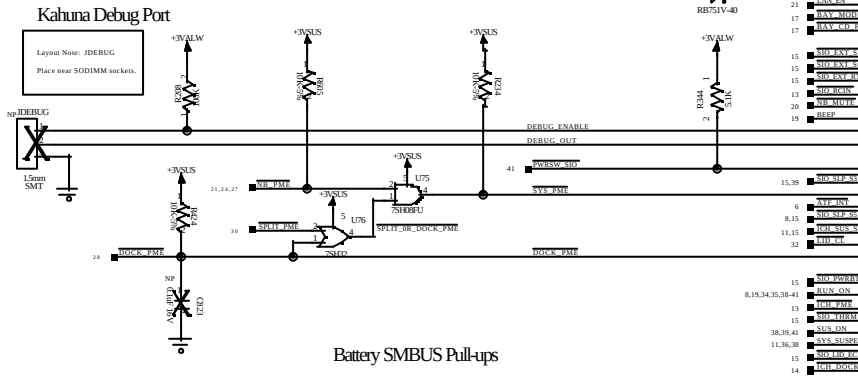

IrDA Mux

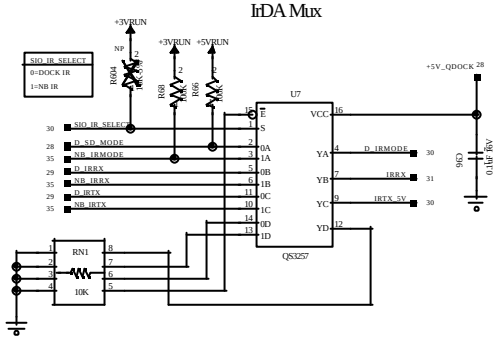

Battery SMBUS Pull-ups

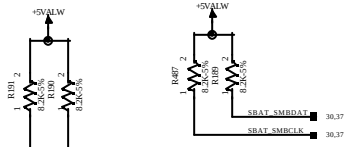

SMBUS Debug Port

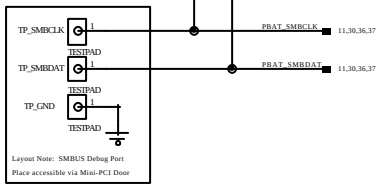

PROPRIETARY NOTE: THIS ITEM IS THE PROPERTY OF DELL COMPUTER CORP, AUSTIN, TEXAS AND CONTAINS CONFIDENTIAL AND TRADE SECRET INFORMATION. THIS ITEM MAY NOT BE TRANSFERRED FROM THE CUSTODY OF DELL COMPUTER CORP. EXCEPT AS AUTHORIZED BY DELL COMPUTER CORP., AND THEN ONLY BY WAY OF LOAN FOR LIMITED PURPOSES. IT MUST NOT BE REPRODUCED IN WHOLE OR IN PART AND MUST BE RETURNED TO DELL COMPUTER CORP. UPON REQUEST AND IN ALL EVENTS UPON COMPLETION OF THE PURPOSE OF THE LOAN. NEITHER THIS ITEM OR THE INFORMATION IT CONTAINS MAY BE USED BY OR DISCLOSED TO PERSONS NOT HAVING A NEED FOR SUCH USE OR DISCLOSURE CONSISTENT WITH THE PURPOSE OF THE LOAN WITHOUT THE PRIOR WRITTEN CONSENT OF DELL COMPUTER CORPORATION.

DELL COMPUTER CORPORATION AUSTIN,TEXAS

TITLE: SCHEMATIC, M/B LA-1221

DWG NO. 401195 REV. 4A

DATE: 11/15/02 SHEET 81 OF 102

Super I/O Controller (Kahuna 2/2)

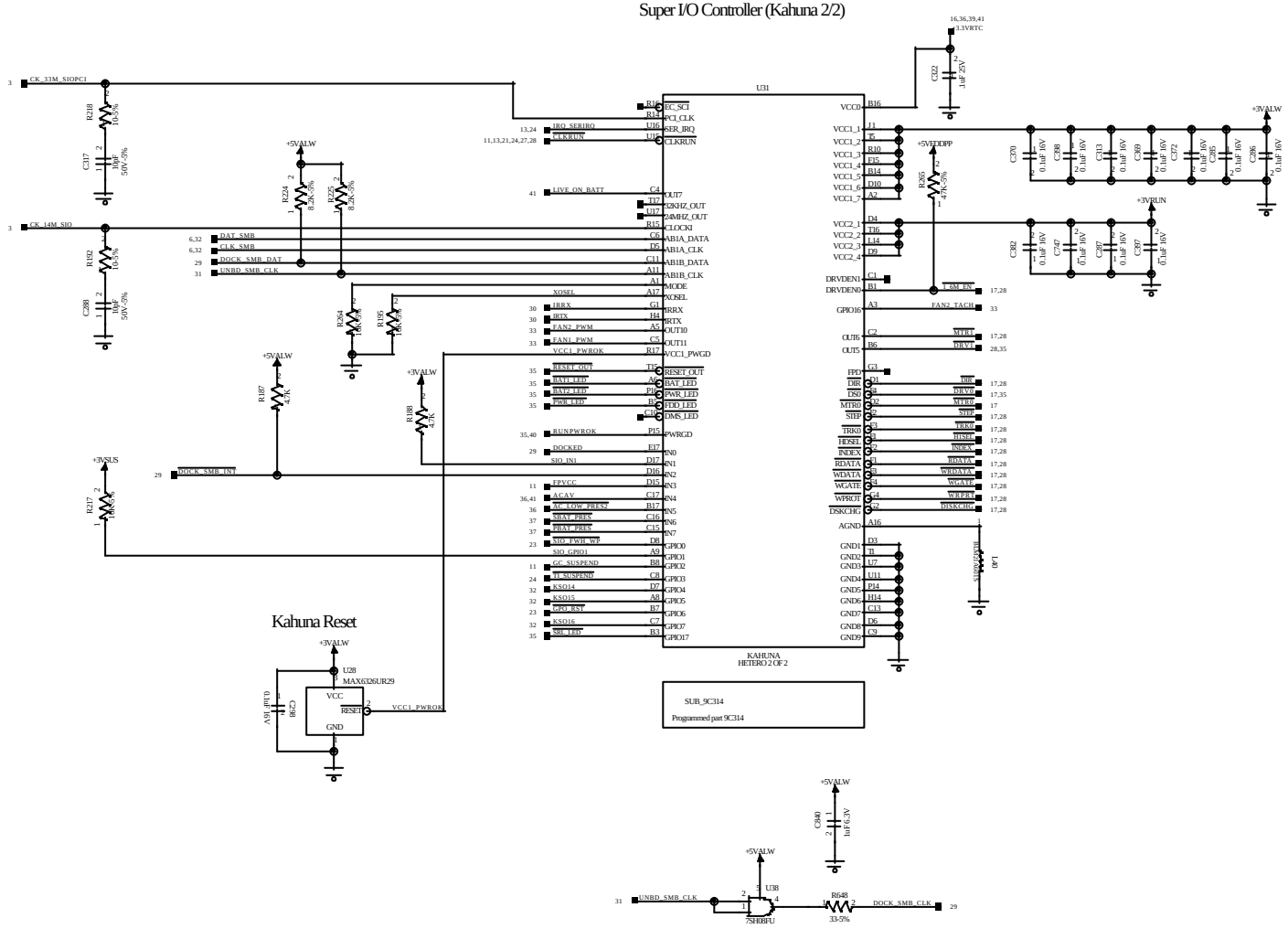

COMPUTER CORPORATION AUSTIN,TEXAS

TITLE: SCHEMATIC, M/B LA-1221

DWG NO. 401195 REV. 4A

DATE: 11/15/02 SHEET 82 OF 102

PROPRIETARY NOTE: THIS ITEM IS THE PROPERTY OF DELL COMPUTER CORP. AUSTIN, TEXAS AND CONTAINS CONFIDENTIAL AND TRADE SECRET INFORMATION. THIS ITEM MAY NOT BE TRANSFERRED FROM THE CUSTODY OF DELL COMPUTER CORP. EXCEPT AS AUTHORIZED BY DELL COMPUTER CORP., AND THEN ONLY BY WAY OF LOAN FOR LIMITED PURPOSES. IT MUST NOT BE REPRODUCED IN WHOLE OR IN PART AND MUST BE RETURNED TO DELL COMPUTER CORP. UPON REQUEST AND IN ALL EVENTS UPON COMPLETION OF THE PURPOSE OF THE LOAN. NEITHER THIS ITEM OR THE INFORMATION IT CONTAINS MAY BE USED BY OR DISCLOSED TO PERSONS NOT HAVING A NEED FOR SUCH USE OR DISCLOSURE CONSISTENT WITH THE PURPOSE OF THE LOAN WITHOUT THE PRIOR WRITTEN CONSENT OF DELL COMPUTER CORPORATION.

EEPROM (Service/Asset Tag, etc.)

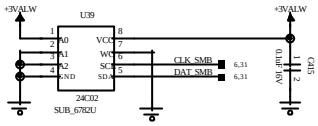

Palm Rest Connector

Rbat / Speakers / Touch Pad /
Pointing Stick Controller / Lid Close Detection

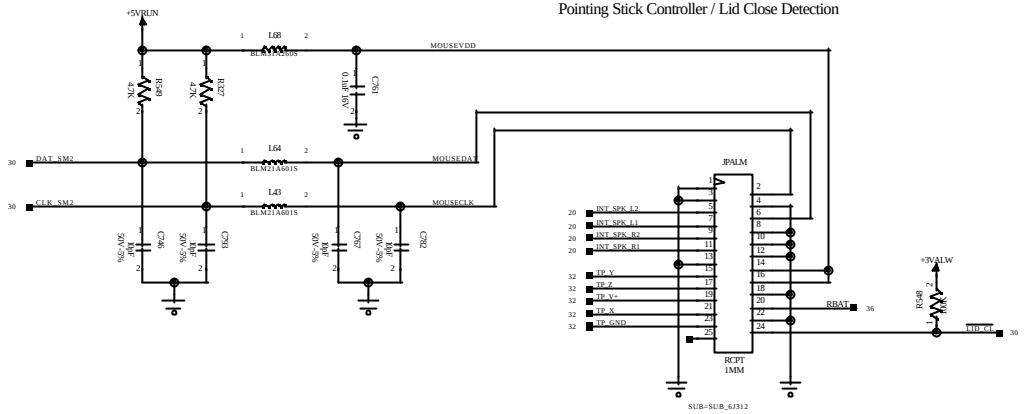

Sub= Swapped Connector between Palm rest and Connector originally on MB

Internal Keyboard Connector

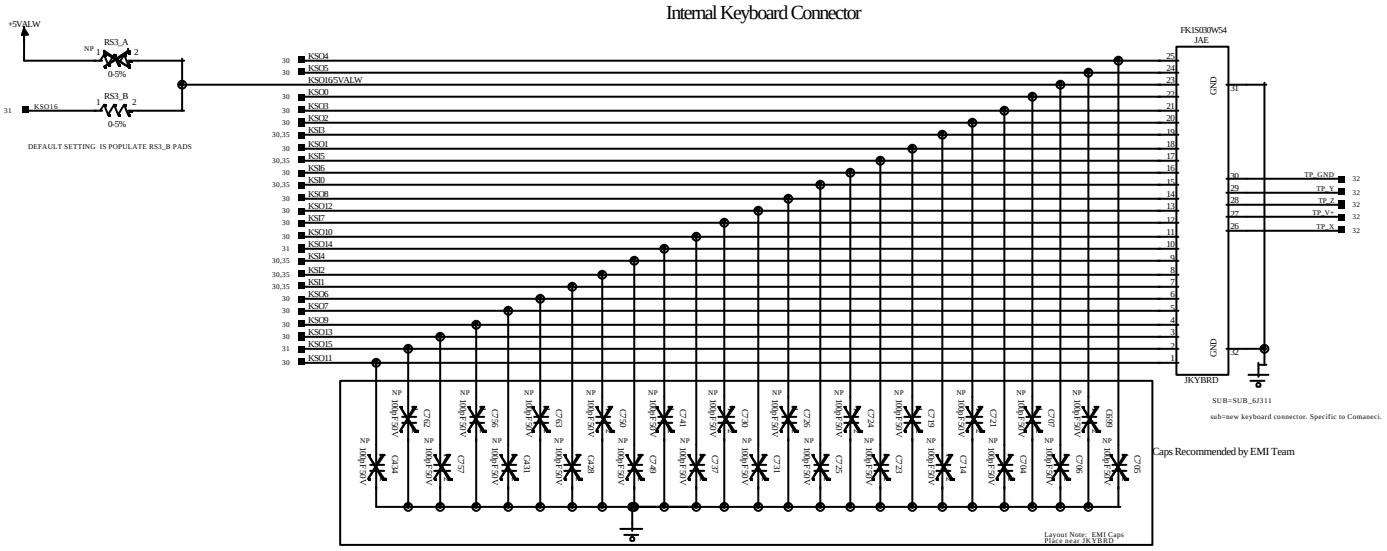

PROPRIETARY NOTE: THIS ITEM IS THE PROPERTY OF DELL COMPUTER CORP, AUSTIN, TEXAS AND CONTAINS CONFIDENTIAL AND TRADE SECRET INFORMATION. THIS ITEM MAY NOT BE TRANSFERRED FROM THE CUSTODY OF DELL COMPUTER CORP. EXCEPT AS AUTHORIZED BY DELL COMPUTER CORP., AND THEN ONLY BY WAY OF LOAN FOR LIMITED PURPOSES. IT MUST NOT BE REPRODUCED IN WHOLE OR IN PART AND MUST BE RETURNED TO DELL COMPUTER CORP. UPON REQUEST AND IN ALL EVENTS UPON COMPLETION OF THE PURPOSE OF THE LOAN. NEITHER THIS ITEM OR THE INFORMATION IT CONTAINS MAY BE USED BY OR DISCLOSED TO PERSONS NOT HAVING A NEED FOR SUCH USE OR DISCLOSURE CONSISTENT WITH THE PURPOSE OF THE LOAN WITHOUT THE PRIOR WRITTEN CONSENT OF DELL COMPUTER CORPORATION.

DELL COMPUTER CORPORATION AUSTIN,TEXAS

TITLE: SCHEMATIC, M/B LA-1221

DWG NO. 401195 REV. 4A

DATE: 11/15/02 SHEET 83 OF 102

Fan Control Circuit

Fan 1 Control and Tachometer

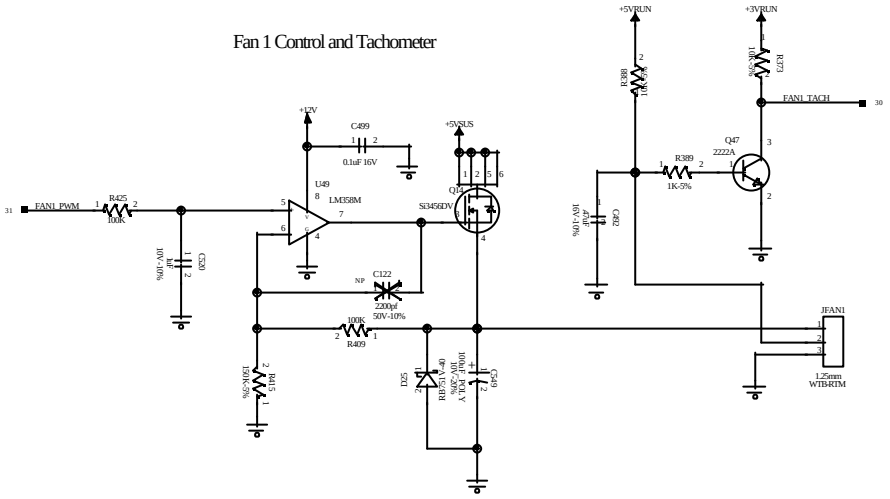

Fan 2 Control and Tachometer

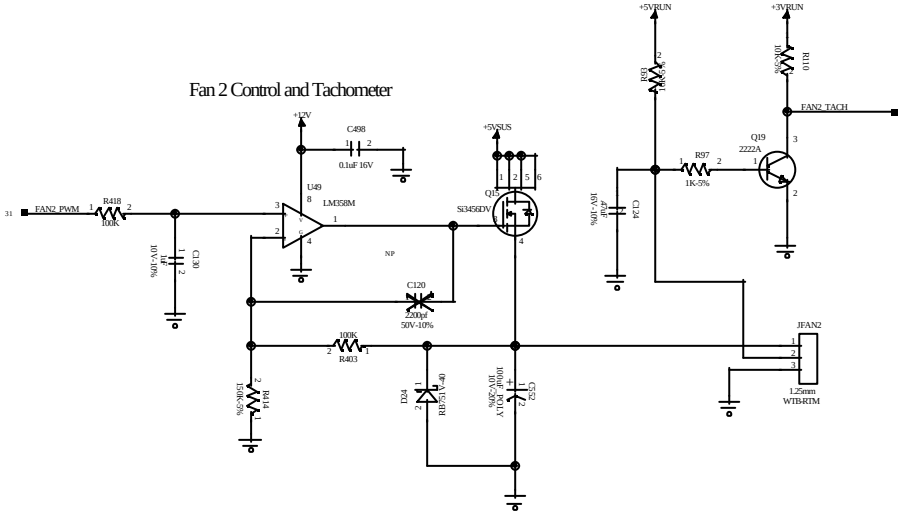

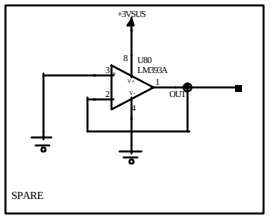

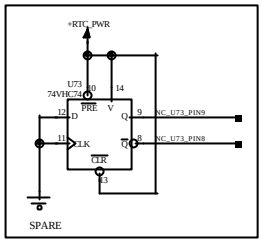

Thermtrip Power Down Circuit

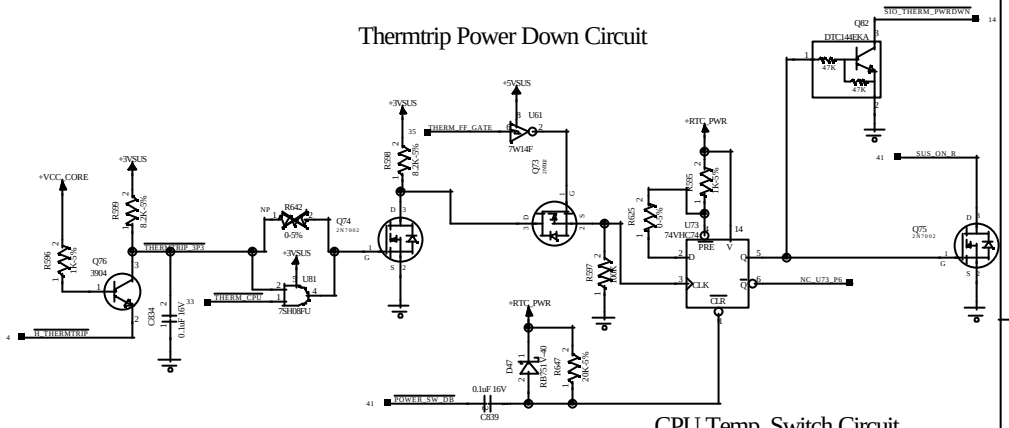

CPU Thermistor Circuit

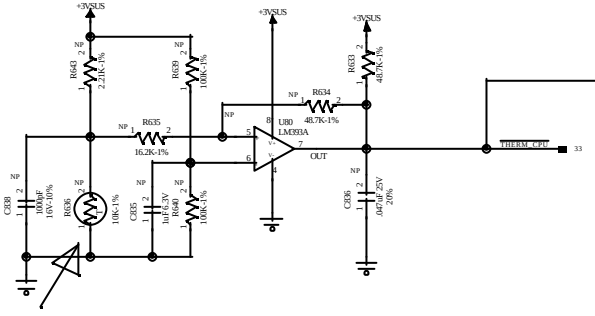

Place this part in the CPU cavity.

CPU Temp. Switch Circuit

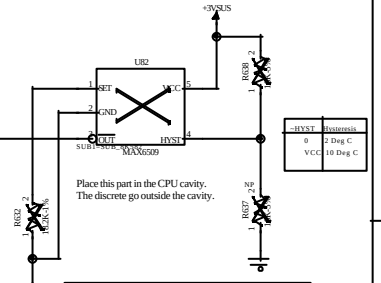

Place this part in the CPU cavity.
The discrete go outside the cavity.

-HYST	Hysteresis
0	2 Deg C
VCC	10 Deg C

Rset Resistor Value Calculation

Rset = [(1.3258*10^5)/(T+1.3)] - 310.1693 - [(5.7797*10^6)/(T+1.3)^2]

Rset = [(8.3793*10^4)/T] - 211.3569 + [(1.2989*10^5)/T^2]

T=Temp in Degrees Kelvin

PROPRIETARY NOTE: THIS ITEM IS THE PROPERTY OF DELL COMPUTER CORP, AUSTIN, TEXAS AND CONTAINS CONFIDENTIAL AND TRADE SECRET INFORMATION. THIS ITEM MAY NOT BE TRANSFERRED FROM THE CUSTODY OF DELL COMPUTER CORP. EXCEPT AS AUTHORIZED BY DELL COMPUTER CORP., AND THEN ONLY BY WAY OF LOAN FOR LIMITED PURPOSES. IT MUST NOT BE REPRODUCED IN WHOLE OR IN PART AND MUST BE RETURNED TO DELL COMPUTER CORP. UPON REQUEST AND IN ALL EVENTS UPON COMPLETION OF THE PURPOSE OF THE LOAN. NEITHER THIS ITEM OR THE INFORMATION IT CONTAINS MAY BE USED BY OR DISCLOSED TO PERSONS NOT HAVING A NEED FOR SUCH USE OR DISCLOSURE CONSISTENT WITH THE PURPOSE OF THE LOAN WITHOUT THE PRIOR WRITTEN CONSENT OF DELL COMPUTER CORPORATION.

DELL COMPUTER CORPORATION AUSTIN,TEXAS

TITLE: SCHEMATIC, M/B LA-1221

DWG NO. 401195 REV. 4A

DATE: 11/15/02 SHEET 84 OF 102

Parallel Port Filtering/Termination

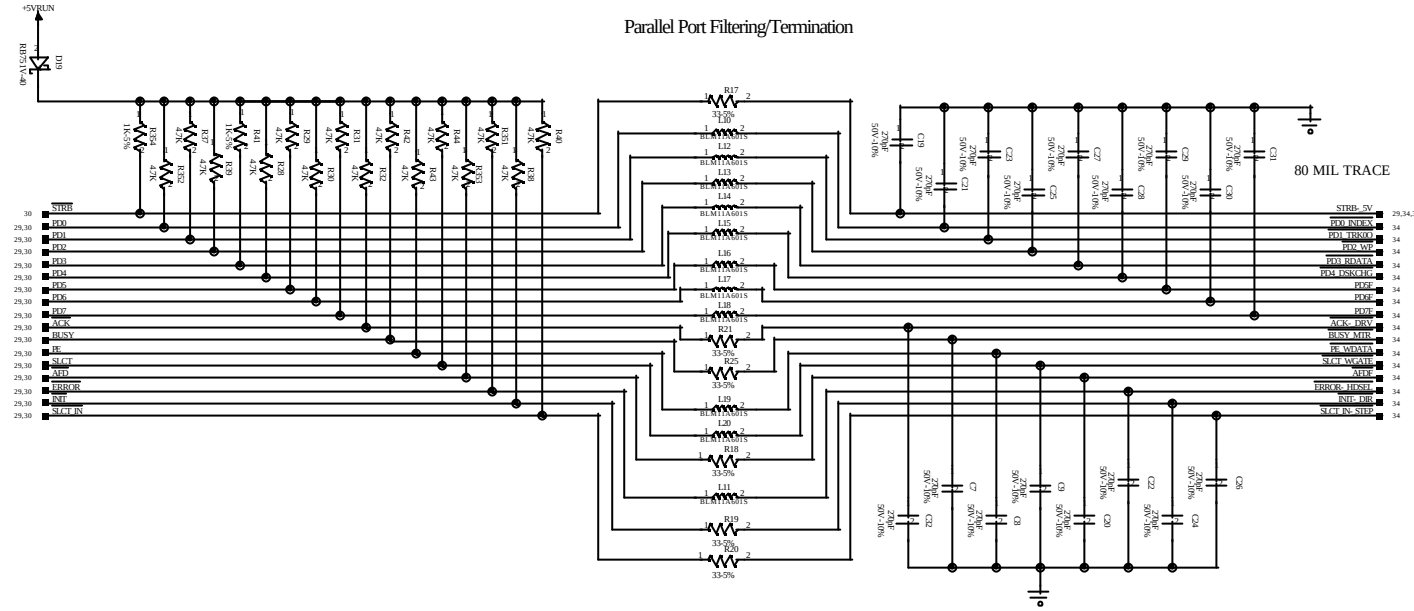

Parallel Port Connector

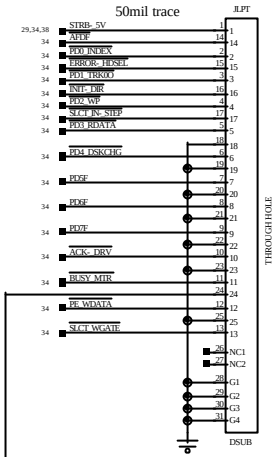

REMOVE THIS

Parallel Port Floppy Detection

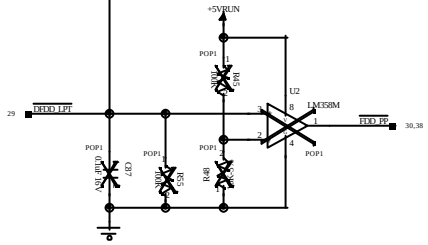

Serial Port Transceiver

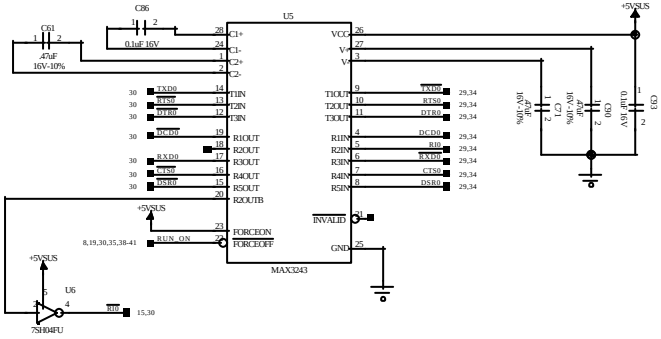

Serial Port Connector

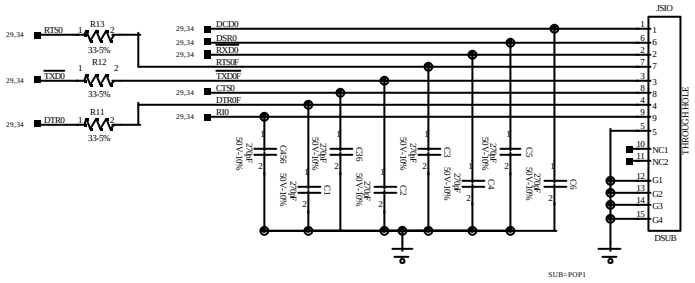

PROPRIETARY NOTE: THIS ITEM IS THE PROPERTY OF DELL COMPUTER CORP, AUSTIN, TEXAS AND CONTAINS CONFIDENTIAL AND TRADE SECRET INFORMATION. THIS ITEM MAY NOT BE TRANSFERRED FROM THE CUSTODY OF DELL COMPUTER CORP. EXCEPT AS AUTHORIZED BY DELL COMPUTER CORP., AND THEN ONLY BY WAY OF LOAN FOR LIMITED PURPOSES. IT MUST NOT BE REPRODUCED IN WHOLE OR IN PART AND MUST BE RETURNED TO DELL COMPUTER CORP. UPON REQUEST AND IN ALL EVENTS UPON COMPLETION OF THE PURPOSE OF THE LOAN. NEITHER THIS ITEM OR THE INFORMATION IT CONTAINS MAY BE USED BY OR DISCLOSED TO PERSONS NOT HAVING A NEED FOR SUCH USE OR DISCLOSURE CONSISTENT WITH THE PURPOSE OF THE LOAN WITHOUT THE PRIOR WRITTEN CONSENT OF DELL COMPUTER CORPORATION.

DELL COMPUTER CORPORATION AUSTIN,TEXAS

TITLE: SCHEMATIC, M/B LA-1221

DWG NO. 401195 REV. 4A

DATE: 11/15/02 SHEET 85 OF 102

On-board IR Transceiver

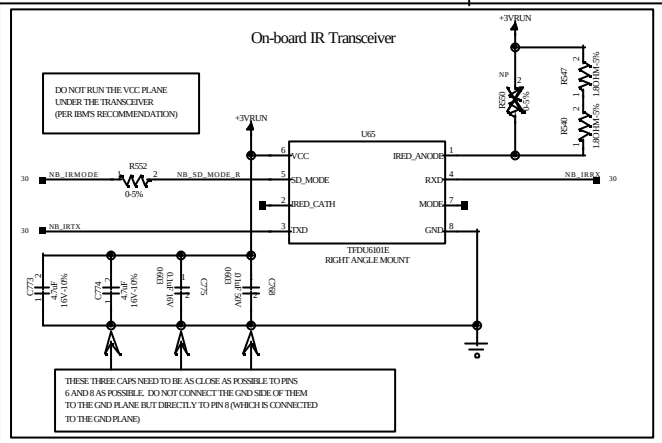

Activity LED Driver for Internal Drives

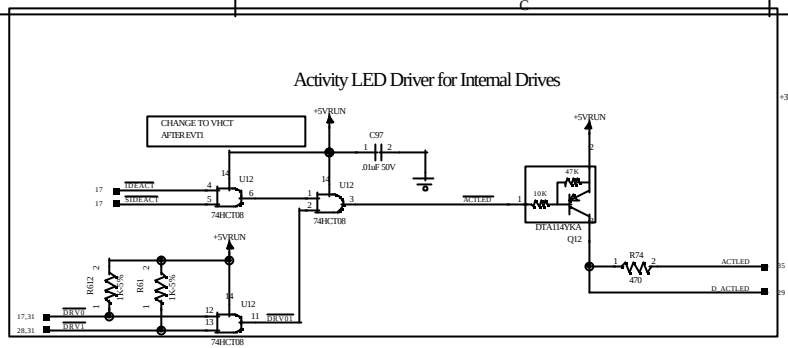

LED Board Connector

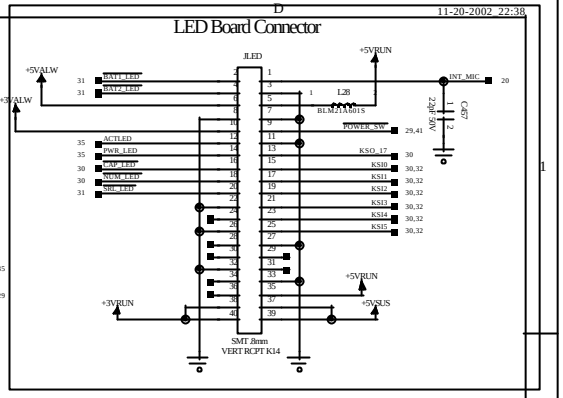

Power Sequencing Logic

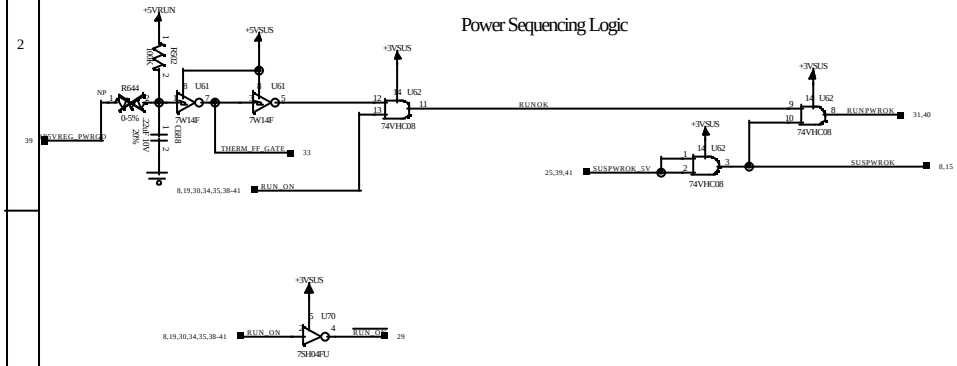

Power LED Driver

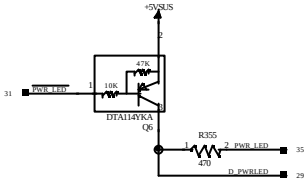

External Keyboard Connector

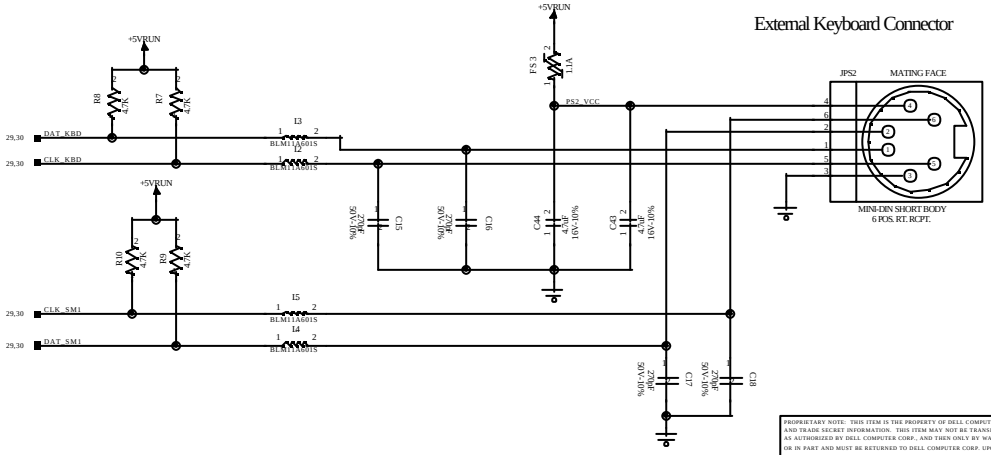

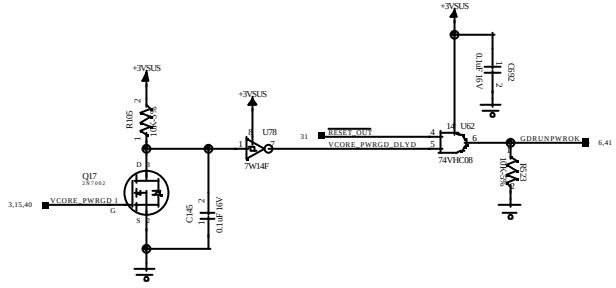

PROPRIETARY NOTE: THIS ITEM IS THE PROPERTY OF DELL COMPUTER CORP. AUSTIN, TEXAS AND CONTAINS CONFIDENTIAL AND TRADE SECRET INFORMATION. THIS ITEM MAY NOT BE TRANSFERRED FROM THE CUSTODY OF DELL COMPUTER CORP. EXCEPT AS AUTHORIZED BY DELL COMPUTER CORP., AND THEN ONLY BY WAY OF LOAN FOR LIMITED PURPOSES. IT MUST NOT BE REPRODUCED IN WHOLE OR IN PART AND MUST BE RETURNED TO DELL COMPUTER CORP. UPON REQUEST AND IN ALL EVENTS UPON COMPLETION OF THE PURPOSE OF THE LOAN. NEITHER THIS ITEM OR THE INFORMATION IT CONTAINS MAY BE USED BY OR DISCLOSED TO PERSONS NOT HAVING A NEED FOR SUCH USE OR DISCLOSURE CONSISTENT WITH THE PURPOSE OF THE LOAN WITHOUT THE PRIOR WRITTEN CONSENT OF DELL COMPUTER CORPORATION.

DELL COMPUTER CORPORATION AUSTIN,TEXAS

TITLE: SCHEMATIC, M/B LA-1221

DWG NO. 401195 REV. 4A

DATE: 11/15/02 SHEET 86 OF 102

Rbat Charger

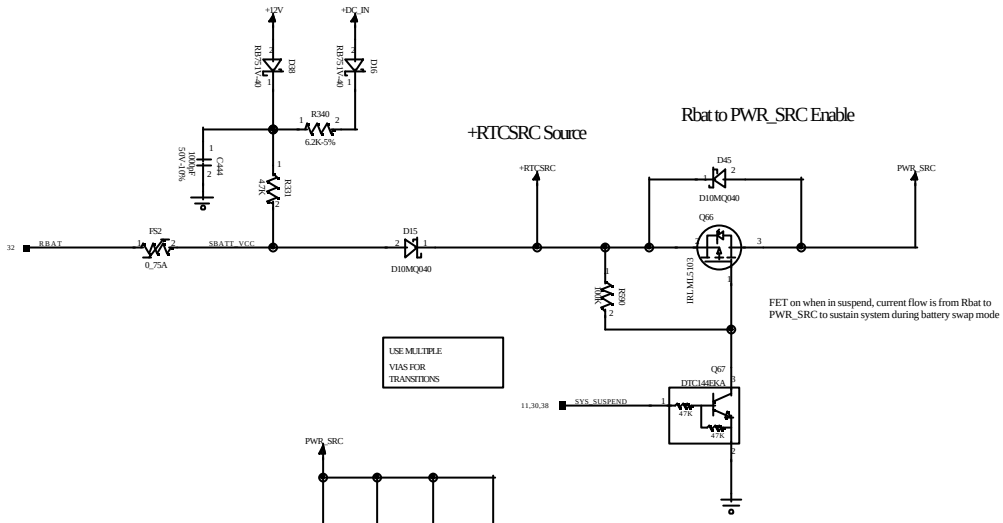

+RTCSRC Source

Rbat to PWR_SRC Enable

FET on when in suspend, current flow is from Rbat to PWR_SRC to sustain system during battery swap mode

Low-Power Adapter Detection

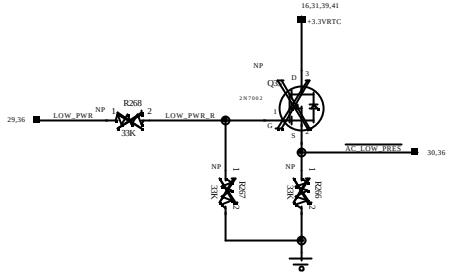

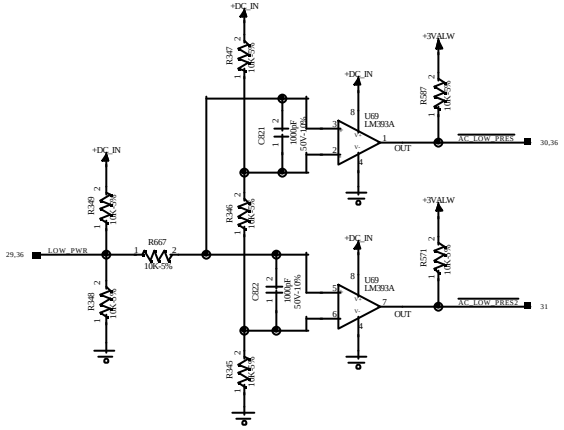

LOW_PWR	AC_LOW_PRES#	AC_LOW_PRES2#
0V	0	0
FLOAT	0	1
20V	1	1

Charger Board Connector

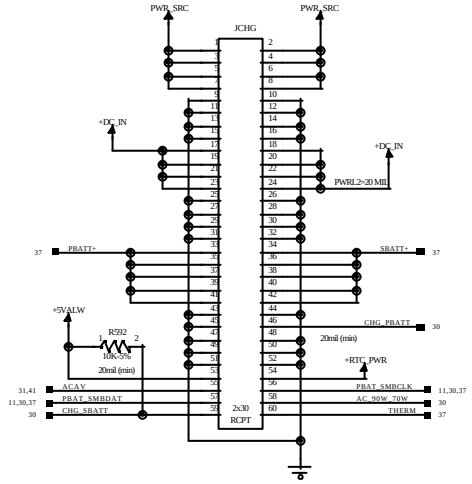

AC Adaptor Connector

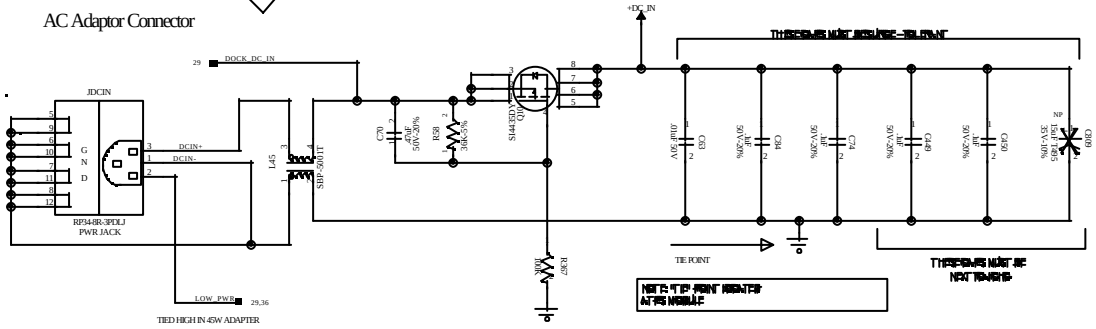

+DC_IN Source

DELL	COMPUTER CORPORATION AUSTIN,TEXAS
TITLE	SCHEMATIC, M/B LA-1221
DWG NO. 401195	REV. 401195
DATE 11/15/02	SHEET 87 OF 102

PROPRIETARY NOTE: THIS ITEM IS THE PROPERTY OF DELL COMPUTER CORP, AUSTIN, TEXAS AND CONTAINS CONFIDENTIAL AND TRADE SECRET INFORMATION. THIS ITEM MAY NOT BE TRANSFERRED FROM THE CUSTODY OF DELL COMPUTER CORP. EXCEPT AS AUTHORIZED BY DELL COMPUTER CORP., AND THEN ONLY BY WAY OF LOAN FOR LIMITED PURPOSES. IT MUST NOT BE REPRODUCED IN WHOLE OR IN PART AND MUST BE RETURNED TO DELL COMPUTER CORP. UPON REQUEST AND IN ALL EVENTS UPON COMPLETION OF THE PURPOSE OF THE LOAN. NEITHER THIS ITEM OR THE INFORMATION IT CONTAINS MAY BE USED BY OR DISCLOSED TO PERSONS NOT HAVING A NEED FOR SUCH USE OR DISCLOSURE CONSISTENT WITH THE PURPOSE OF THE LOAN WITHOUT THE PRIOR WRITTEN CONSENT OF DELL COMPUTER CORPORATION.

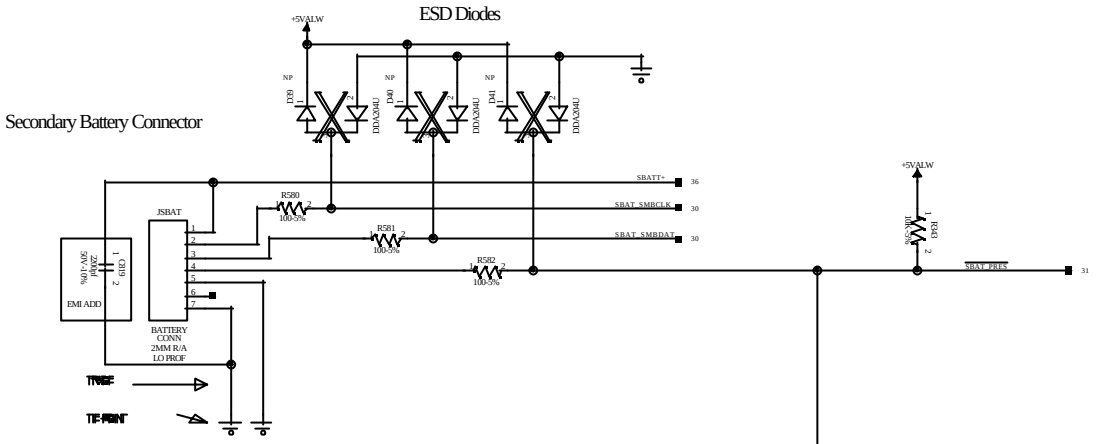

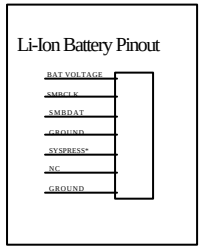

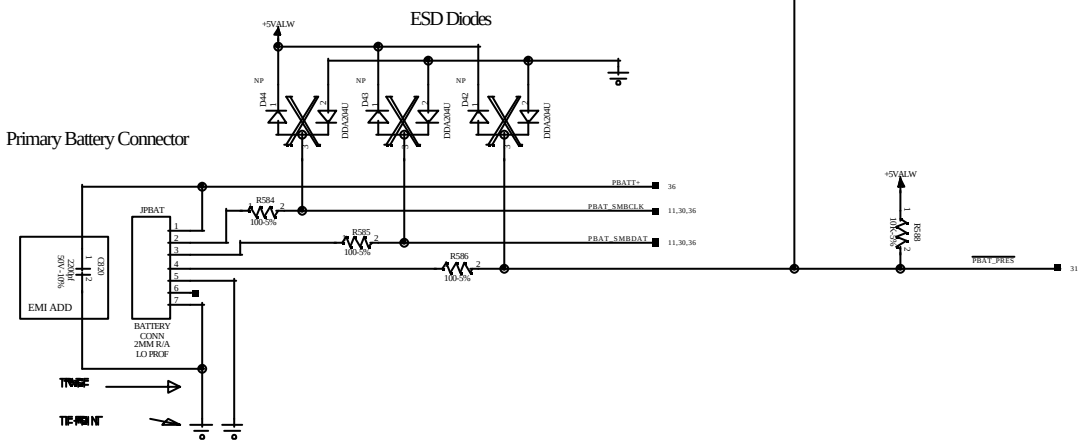

PROPRIETARY NOTE: THIS ITEM IS THE PROPERTY OF DELL COMPUTER CORP, AUSTIN, TEXAS AND CONTAINS CONFIDENTIAL AND TRADE SECRET INFORMATION. THIS ITEM MAY NOT BE TRANSFERRED FROM THE CUSTODY OF DELL COMPUTER CORP. EXCEPT AS AUTHORIZED BY DELL COMPUTER CORP., AND THEN ONLY BY WAY OF LOAN FOR LIMITED PURPOSES. IT MUST NOT BE REPRODUCED IN WHOLE OR IN PART AND MUST BE RETURNED TO DELL COMPUTER CORP. UPON REQUEST AND IN ALL EVENTS UPON COMPLETION OF THE PURPOSE OF THE LOAN. NEITHER THIS ITEM OR THE INFORMATION IT CONTAINS MAY BE USED BY OR DISCLOSED TO PERSONS NOT HAVING A NEED FOR SUCH USE OR DISCLOSURE CONSISTENT WITH THE PURPOSE OF THE LOAN WITHOUT THE PRIOR WRITTEN CONSENT OF DELL COMPUTER CORPORATION.

DELL COMPUTER CORPORATION AUSTIN,TEXAS

TITLE: SCHEMATIC, M/B LA-1221

DWG NO. 401195 REV. 4A

DATE: 11/15/02 SHEET 88 OF 102

Run Planes Enable

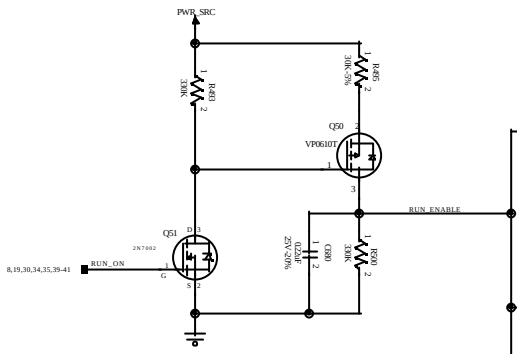

+3VRUN Source

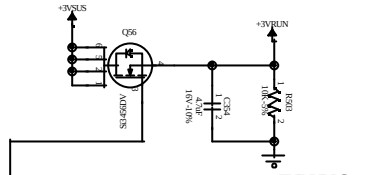

+5VRUN Source

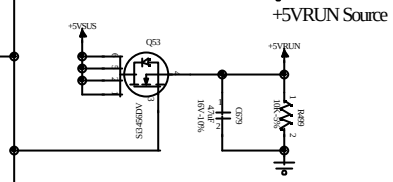

+1.8VRUN Source

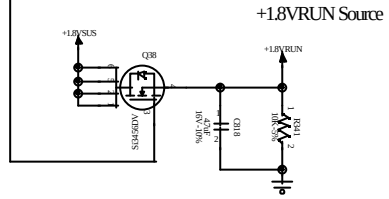

+5VMOD Source

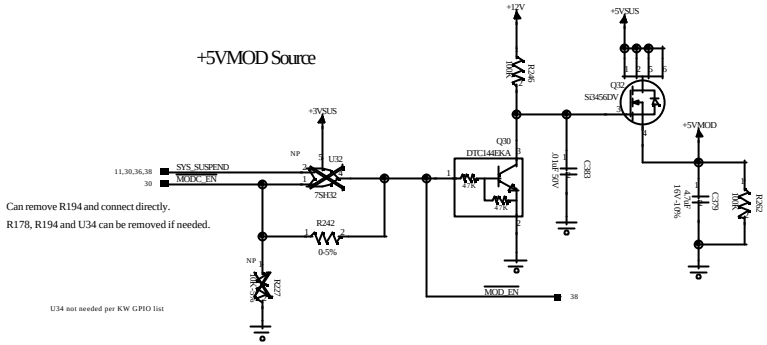

Can remove R194 and connect directly.

R178, R194 and U34 can be removed if needed.

U34 not needed per KW GPIO list

+5HDD Source

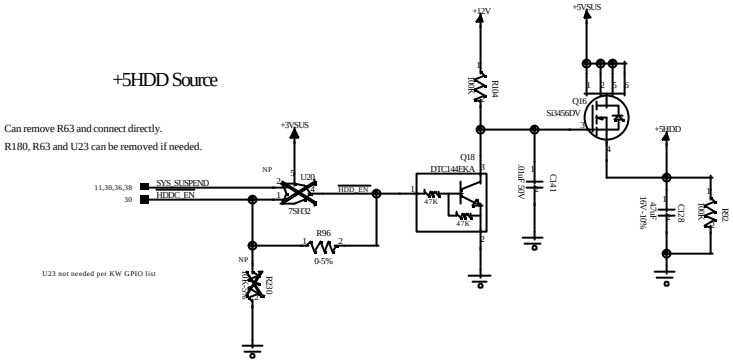

Can remove R63 and connect directly.

R180, R63 and U23 can be removed if needed.

U23 not needed per KW GPIO list

+5VFDDPP Source

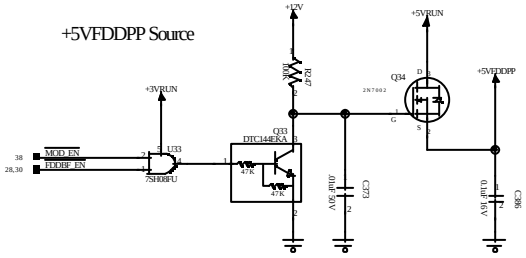

REMOVE THIS

STRB_5V Source

Parallel Port FD support

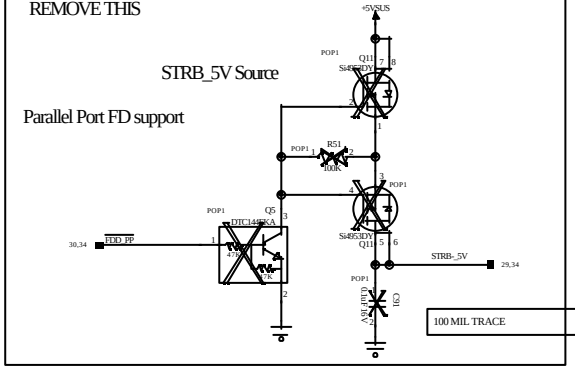

100 MIL TRACE

Voltage Rail Drains

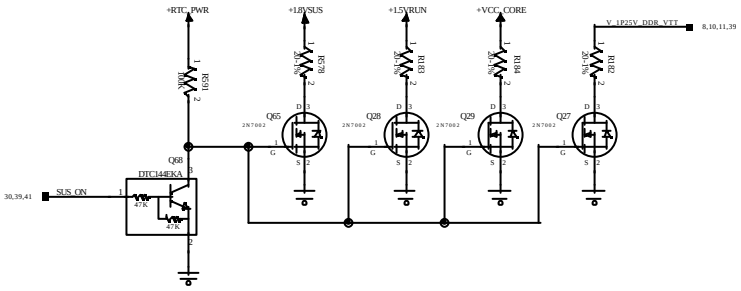

PROPRIETARY NOTE: THIS ITEM IS THE PROPERTY OF DELL COMPUTER CORP, AUSTIN, TEXAS AND CONTAINS CONFIDENTIAL AND TRADE SECRET INFORMATION. THIS ITEM MAY NOT BE TRANSFERRED FROM THE CUSTODY OF DELL COMPUTER CORP. EXCEPT AS AUTHORIZED BY DELL COMPUTER CORP., AND THEN ONLY BY WAY OF LOAN FOR LIMITED PURPOSES. IT MUST NOT BE REPRODUCED IN WHOLE OR IN PART AND MUST BE RETURNED TO DELL COMPUTER CORP. UPON REQUEST AND IN ALL EVENTS UPON COMPLETION OF THE PURPOSE OF THE LOAN. NEITHER THIS ITEM OR THE INFORMATION IT CONTAINS MAY BE USED BY OR DISCLOSED TO PERSONS NOT HAVING A NEED FOR SUCH USE OR DISCLOSURE CONSISTENT WITH THE PURPOSE OF THE LOAN WITHOUT THE PRIOR WRITTEN CONSENT OF DELL COMPUTER CORPORATION.

DELL COMPUTER CORPORATION AUSTIN,TEXAS

TITLE: SCHEMATIC, M/B LA-1221

DWG NO. 401195 REV. 4A

DATE: 11/15/02 SHEET 89 OF 102

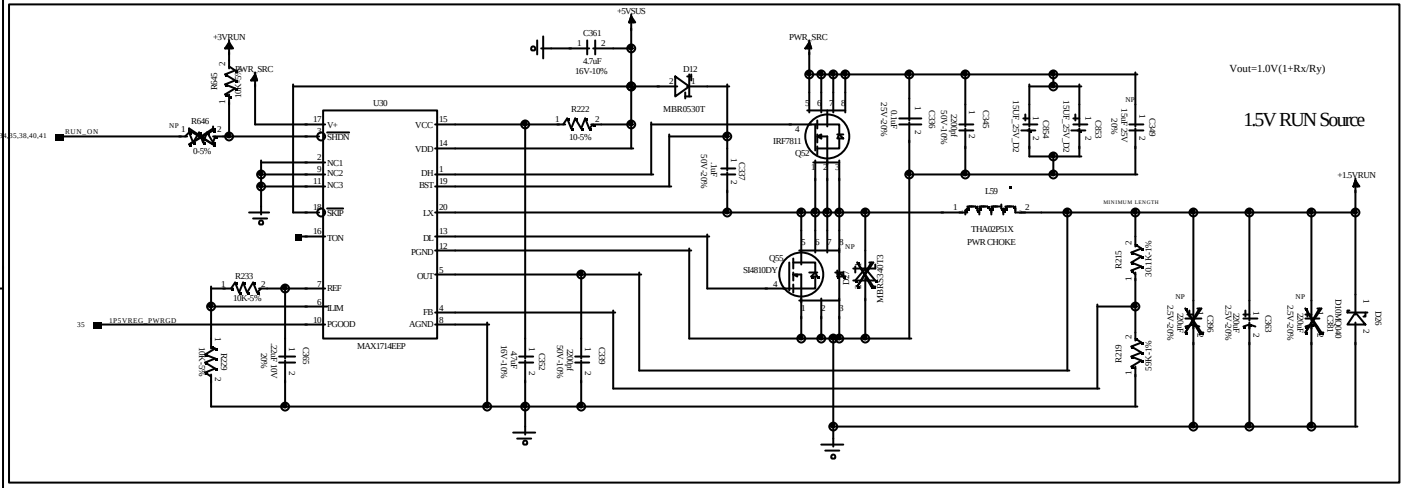

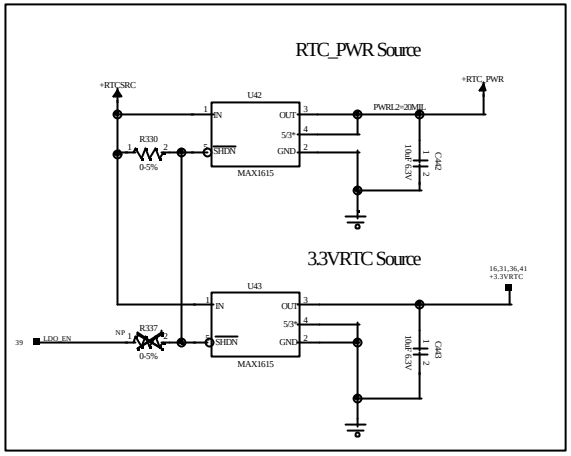

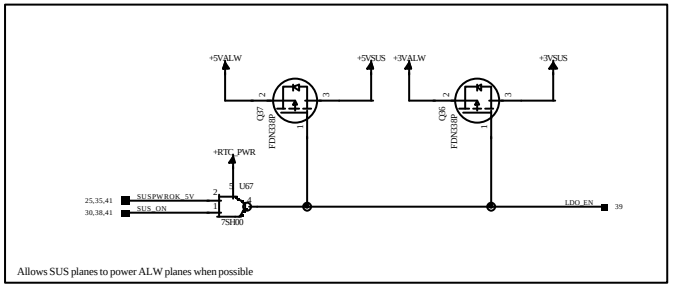

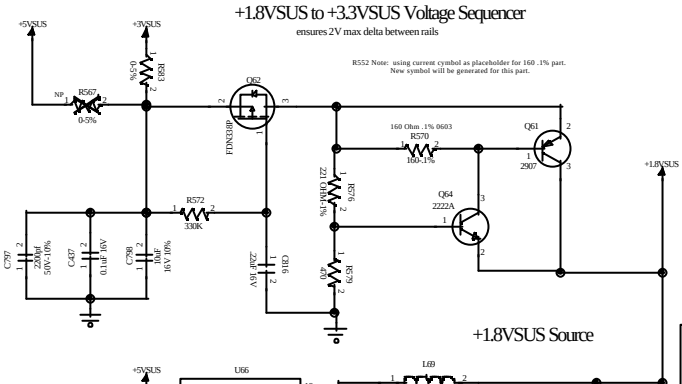

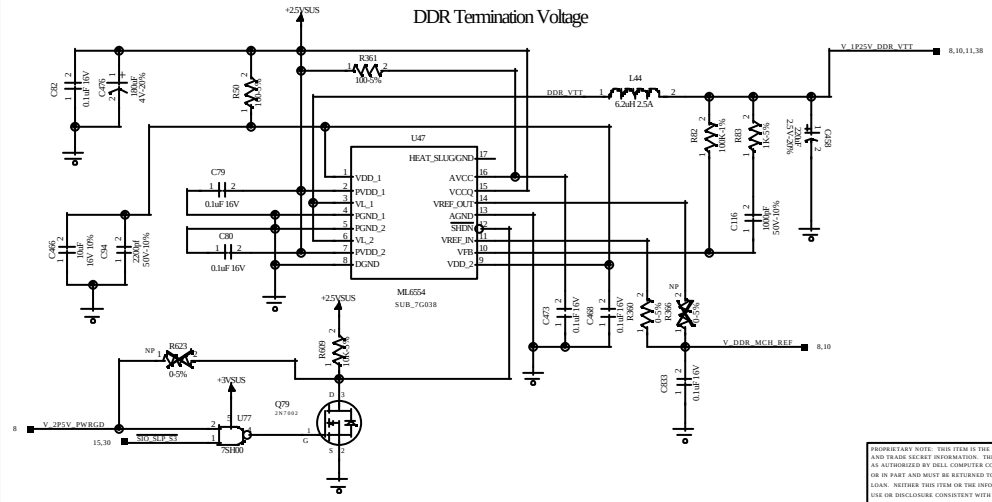

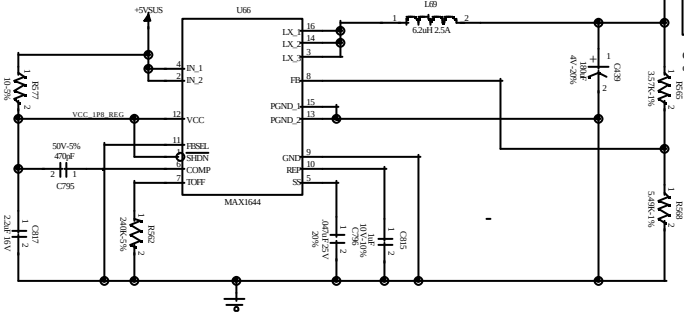

Layout Note: C694

Place a "+" character silkscreen on the board near the non-ground side of this capacitor.

C694 can be populated with either a ceramic (PN 2832P) or tantalum (PN 1033E) type capacitor

PROPRIETARY NOTE: THIS ITEM IS THE PROPERTY OF DELL COMPUTER CORP, AUSTIN, TEXAS AND CONTAINS CONFIDENTIAL AND TRADE SECRET INFORMATION. THIS ITEM MAY NOT BE TRANSFERRED FROM THE CUSTODY OF DELL COMPUTER CORP. EXCEPT AS AUTHORIZED BY DELL COMPUTER CORP., AND THEN ONLY BY WAY OF LOAN FOR LIMITED PURPOSES. IT MUST NOT BE REPRODUCED IN WHOLE OR IN PART AND MUST BE RETURNED TO DELL COMPUTER CORP. UPON REQUEST AND IN ALL EVENTS UPON COMPLETION OF THE PURPOSE OF THE LOAN. NEITHER THIS ITEM OR THE INFORMATION IT CONTAINS MAY BE USED BY OR DISCLOSED TO PERSONS NOT HAVING A NEED FOR SUCH USE OR DISCLOSURE CONSISTENT WITH THE PURPOSE OF THE LOAN WITHOUT THE PRIOR WRITTEN CONSENT OF DELL COMPUTER CORPORATION.

DELL COMPUTER CORPORATION AUSTIN,TEXAS

TITLE: SCHEMATIC, M/B LA-1221

DWG NO. 401195 REV. 4A

DATE: 11/15/02 SHEET 90 OF 102

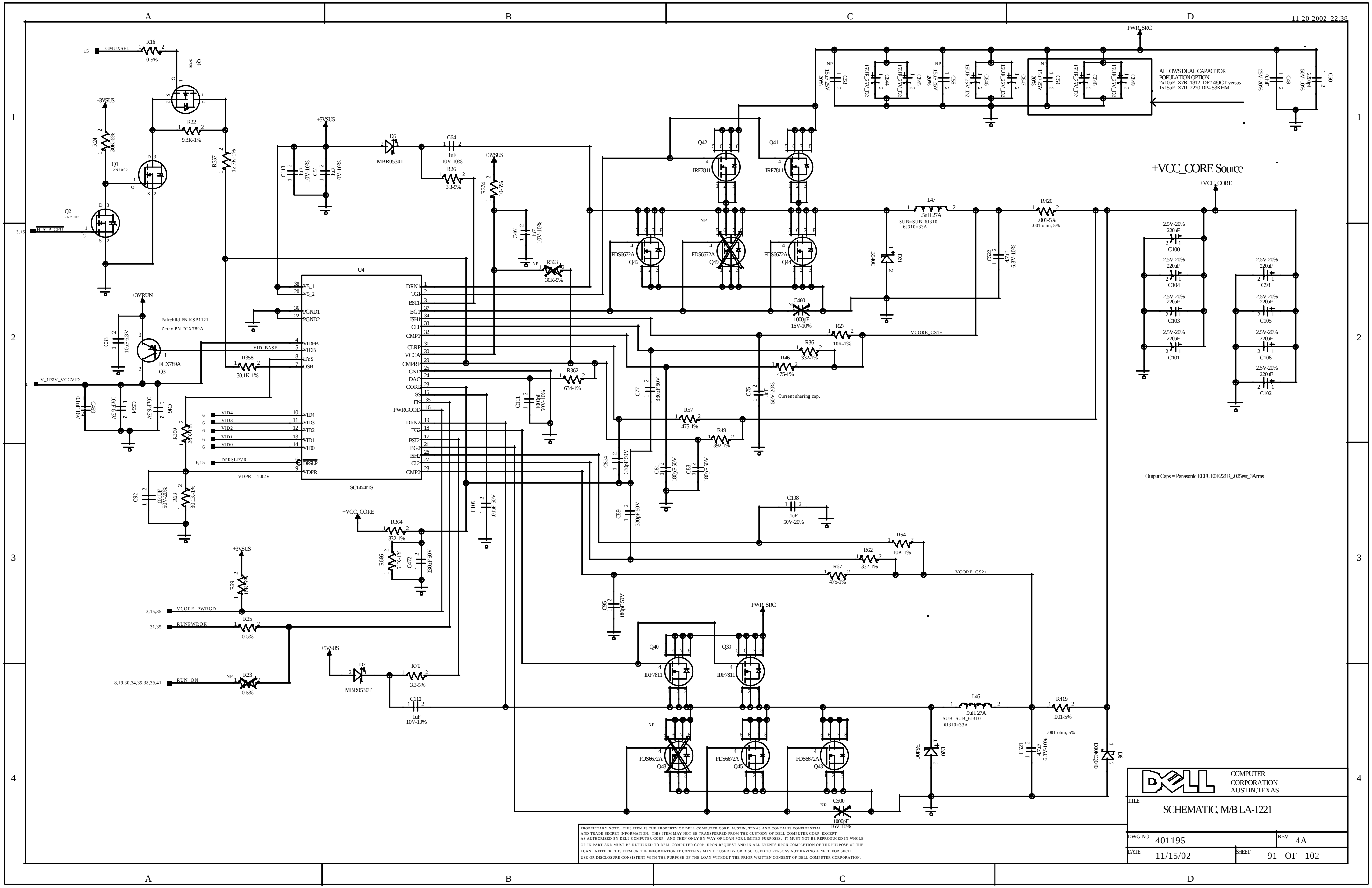

PROPRIETARY NOTE: THIS ITEM IS THE PROPERTY OF DELL COMPUTER CORP. AUSTIN, TEXAS AND CONTAINS CONFIDENTIAL AND TRADE SECRET INFORMATION. THIS ITEM MAY NOT BE TRANSFERRED FROM THE CUSTODY OF DELL COMPUTER CORP. EXCEPT AS AUTHORIZED BY DELL COMPUTER CORP., AND THEN ONLY BY WAY OF LOAN FOR LIMITED PURPOSES. IT MUST NOT BE REPRODUCED IN WHOLE OR IN PART AND MUST BE RETURNED TO DELL COMPUTER CORP. UPON REQUEST AND IN ALL EVENTS UPON COMPLETION OF THE PURPOSE OF THE LOAN. NEITHER THIS ITEM OR THE INFORMATION IT CONTAINS MAY BE USED BY OR DISCLOSED TO PERSONS NOT HAVING A NEED FOR SUCH USE OR DISCLOSURE CONSISTENT WITH THE PURPOSE OF THE LOAN WITHOUT THE PRIOR WRITTEN CONSENT OF DELL COMPUTER CORPORATION.

COMPUTER CORPORATION AUSTIN,TEXAS

TITLE: SCHEMATIC, M/B LA-1221

DWG NO. 401195 | REV. 4A

DATE 11/15/02 | SHEET 91 OF 102

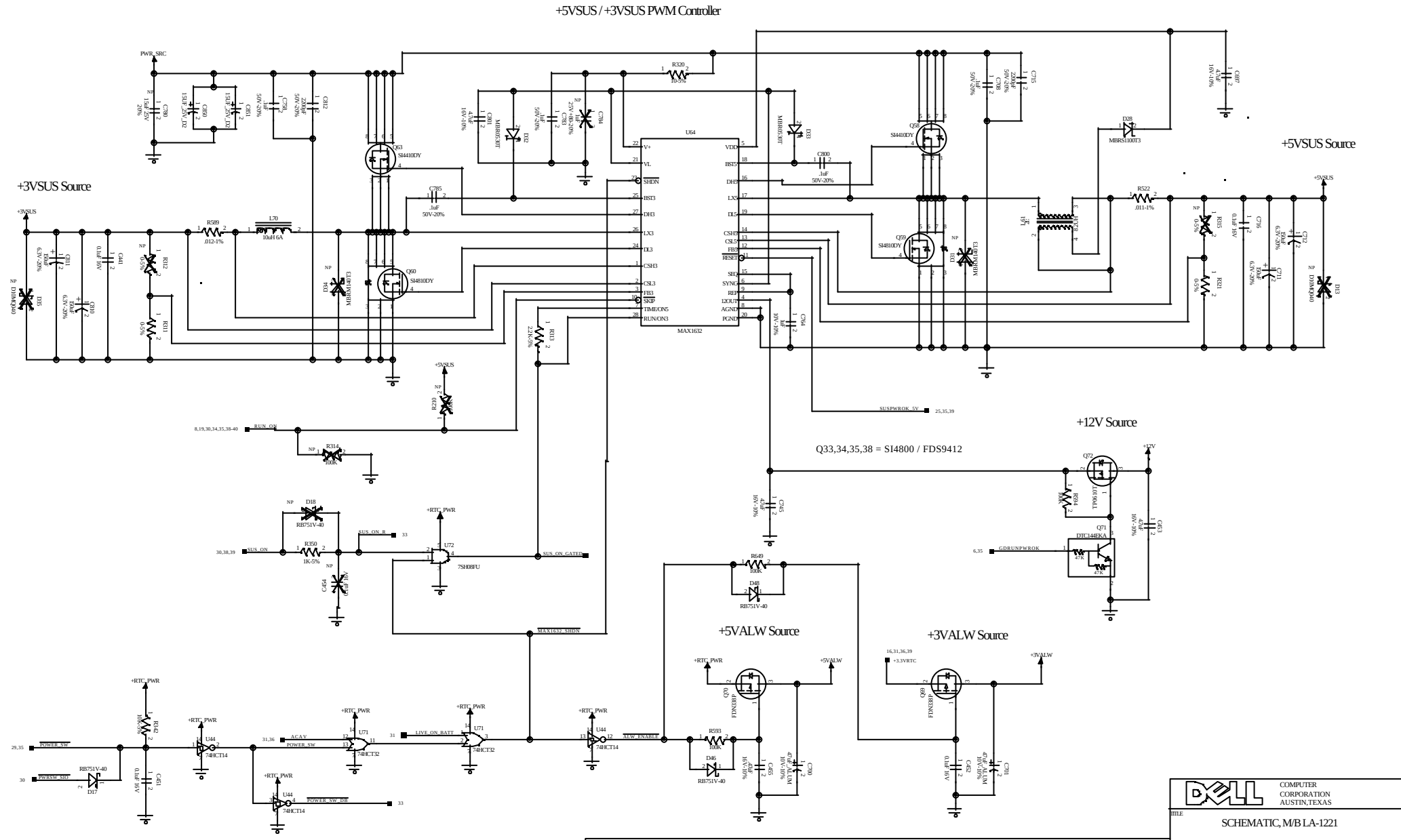

PROPRIETARY NOTE: THIS ITEM IS THE PROPERTY OF DELL COMPUTER CORP. AUSTIN, TEXAS AND CONTAINS CONFIDENTIAL AND TRADE SECRET INFORMATION. THIS ITEM MAY NOT BE TRANSFERRED FROM THE CUSTODY OF DELL COMPUTER CORP. EXCEPT AS AUTHORIZED BY DELL COMPUTER CORP., AND THEN ONLY BY WAY OF LOAN FOR LIMITED PURPOSES. IT MUST NOT BE REPRODUCED IN WHOLE OR IN PART AND MUST BE RETURNED TO DELL COMPUTER CORP. UPON REQUEST AND IN ALL EVENTS UPON COMPLETION OF THE PURPOSE OF THE LOAN. NEITHER THIS ITEM OR THE INFORMATION IT CONTAINS MAY BE USED BY OR DISCLOSED TO PERSONS NOT HAVING A NEED FOR SUCH USE OR DISCLOSURE CONSISTENT WITH THE PURPOSE OF THE LOAN WITHOUT THE PRIOR WRITTEN CONSENT OF DELL COMPUTER CORPORATION.

Memory Door EMI Clips

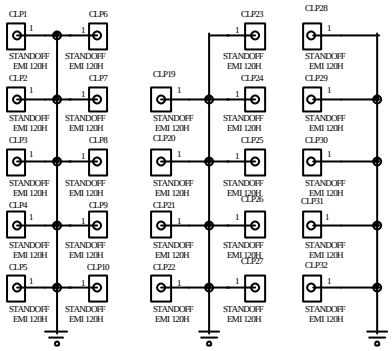

Mini-PCI Door EMI Clips

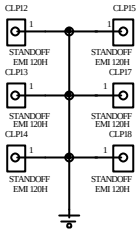

Spares

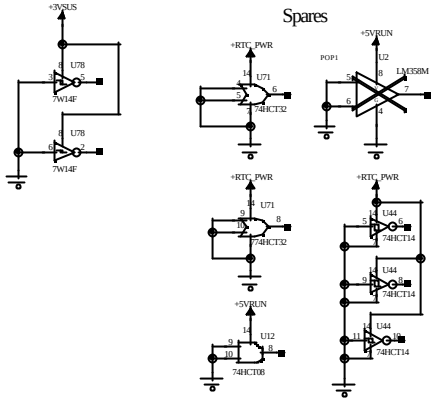

CPU EMI Clips

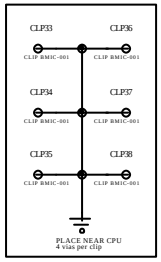

Clock Generator EMI Clips

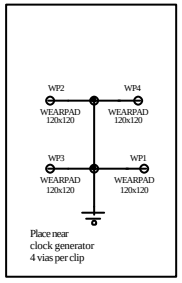

Modem Fence Pads

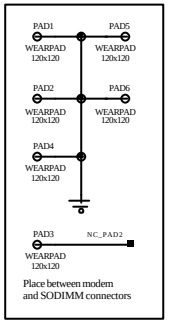

Fiducial mark

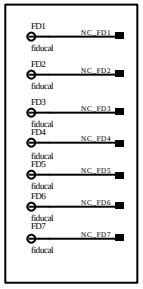

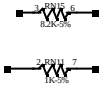

Mounting Holes

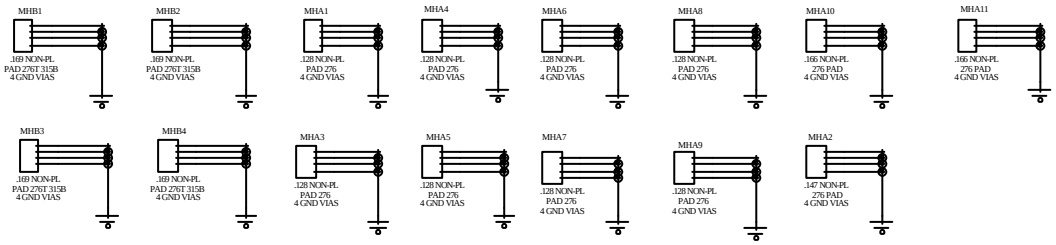

Xlbom requires ADD attributes to be attached to
an instance of a symbol (prefix I in the wire file). You may
not rename the attributes. The required order is:
ADD, ADD1, ADD2, ...

ADD=ADD*_3F195_PWB
ADD1=ADD*_1F473_SCHEM
ADD2=ADD*_0F681_ASSYDWG
ADD3=ADD*_42753_BARCODE_REVLEVEL — Label, REV LEVEL,BARCODE,PWA
ADD4=ADD*_42610_BARCODE_IDLABEL — Label, LBL,ID,BARCODE,PWA
PWA 2F219

PROPRIETARY NOTE: THIS ITEM IS THE PROPERTY OF DELL COMPUTER CORP, AUSTIN, TEXAS AND CONTAINS CONFIDENTIAL AND TRADE SECRET INFORMATION. THIS ITEM MAY NOT BE TRANSFERRED FROM THE CUSTODY OF DELL COMPUTER CORP. EXCEPT AS AUTHORIZED BY DELL COMPUTER CORP., AND THEN ONLY BY WAY OF LOAN FOR LIMITED PURPOSES. IT MUST NOT BE REPRODUCED IN WHOLE OR IN PART AND MUST BE RETURNED TO DELL COMPUTER CORP. UPON REQUEST AND IN ALL EVENTS UPON COMPLETION OF THE PURPOSE OF THE LOAN. NEITHER THIS ITEM OR THE INFORMATION IT CONTAINS MAY BE USED BY OR DISCLOSED TO PERSONS NOT HAVING A NEED FOR SUCH USE OR DISCLOSURE CONSISTENT WITH THE PURPOSE OF THE LOAN WITHOUT THE PRIOR WRITTEN CONSENT OF DELL COMPUTER CORPORATION.

DELL COMPUTER CORPORATION AUSTIN,TEXAS

TITLE: SCHEMATIC, M/B LA-1221

DWG NO. 401195 REV. 4A

DATE 11/15/02 SHEET 93 OF 102

Schematic Change List

PROPRIETARY NOTE: THIS ITEM IS THE PROPERTY OF DELL COMPUTER CORP, AUSTIN, TEXAS AND CONTAINS CONFIDENTIAL AND TRADE SECRET INFORMATION. THIS ITEM MAY NOT BE TRANSFERRED FROM THE CUSTODY OF DELL COMPUTER CORP. EXCEPT AS AUTHORIZED BY DELL COMPUTER CORP., AND THEN ONLY BY WAY OF LOAN FOR LIMITED PURPOSES. IT MUST NOT BE REPRODUCED IN WHOLE OR IN PART AND MUST BE RETURNED TO DELL COMPUTER CORP. UPON REQUEST AND IN ALL EVENTS UPON COMPLETION OF THE PURPOSE OF THE LOAN. NEITHER THIS ITEM OR THE INFORMATION IT CONTAINS MAY BE USED BY OR DISCLOSED TO PERSONS NOT HAVING A NEED FOR SUCH USE OR DISCLOSURE CONSISTENT WITH THE PURPOSE OF THE LOAN WITHOUT THE PRIOR WRITTEN CONSENT OF DELL COMPUTER CORPORATION.

COMPUTER
CORPORATION
AUSTIN,TEXAS

TITLE: SCHEMATIC, M/B LA-1221

DWG NO. 401195 REV. 4A

DATE: 11/15/02 SHEET 94 OF 102

COMANECI POWER RAILS

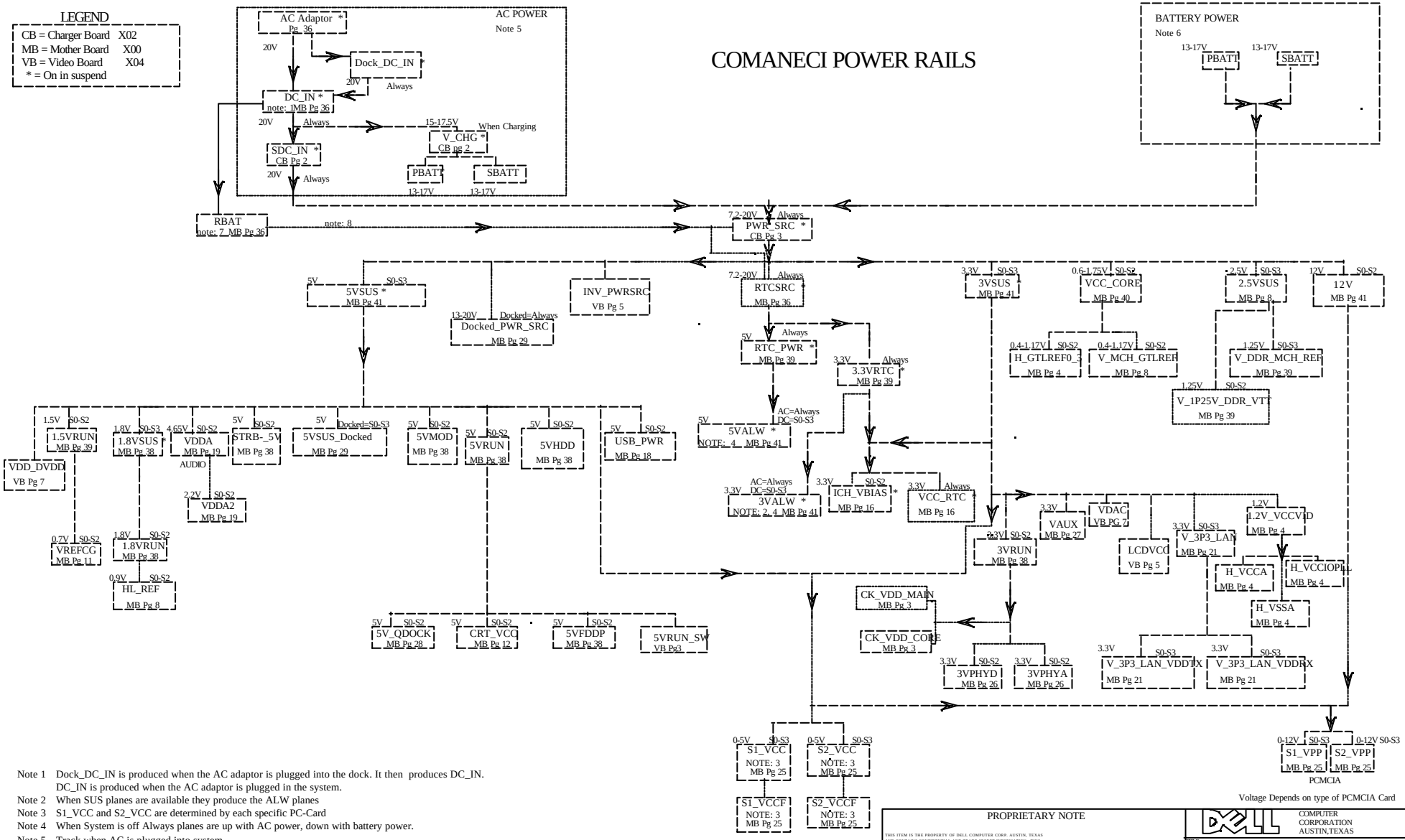

Note 1 Dock_DC_IN is produced when the AC adaptor is plugged into the dock. It then produces DC_IN. DC_IN is produced when the AC adaptor is plugged in the system.
Note 2 When SUS planes are available they produce the ALW planes
Note 3 S1_VCC and S2_VCC are determined by each specific PC-Card
Note 4 When System is off Always planes are up with AC power, down with battery power.
Note 5 Track when AC is plugged into system
Note 6 Track when System is battery power
Note 7 Charged by 12V when on battery
Note 8 Enabes PWR_SRC during battery swap

PROPRIETARY NOTE

THIS ITEM IS THE PROPERTY OF DELL COMPUTER CORP. AUSTIN, TEXAS AND CONTAINS CONFIDENTIAL AND TRADE SECRET INFORMATION. THIS ITEM MAY NOT BE TRANSFERRED FROM THE CUSTODY OF DELL COMPUTER CORP., EXCEPT AS AUTHORIZED BY DELL COMPUTER CORP., AND THEN ONLY BY WAY OF LOAN FOR LIMITED PURPOSES. IT MUST NOT BE REPRODUCED IN WHOLE OR IN PART AND MUST BE RETURNED TO DELL COMPUTER CORP. UPON REQUEST AND IN ALL EVENTS UPON COMPLETION OF THE PURPOSE OF THE LOAN. NEITHER THIS ITEM NOR THE INFORMATION IT CONTAINS MAY BE USED BY OR DISCLOSED TO PERSONS NOT HAVING A NEED FOR SUCH USE OR DISCLOSURE CONSISTENT WITH THE PURPOSE OF THE LOAN WITHOUT THE PRIOR WRITTEN CONSENT OF DELL COMPUTER CORPORATION.

DELL COMPUTER CORPORATION AUSTIN,TEXAS

TITLE: SCHEMATIC, M/B LA-1221

DWG NO. 401195 REV. 4A

DATE: 11/15/02 SHEET 95 OF 102

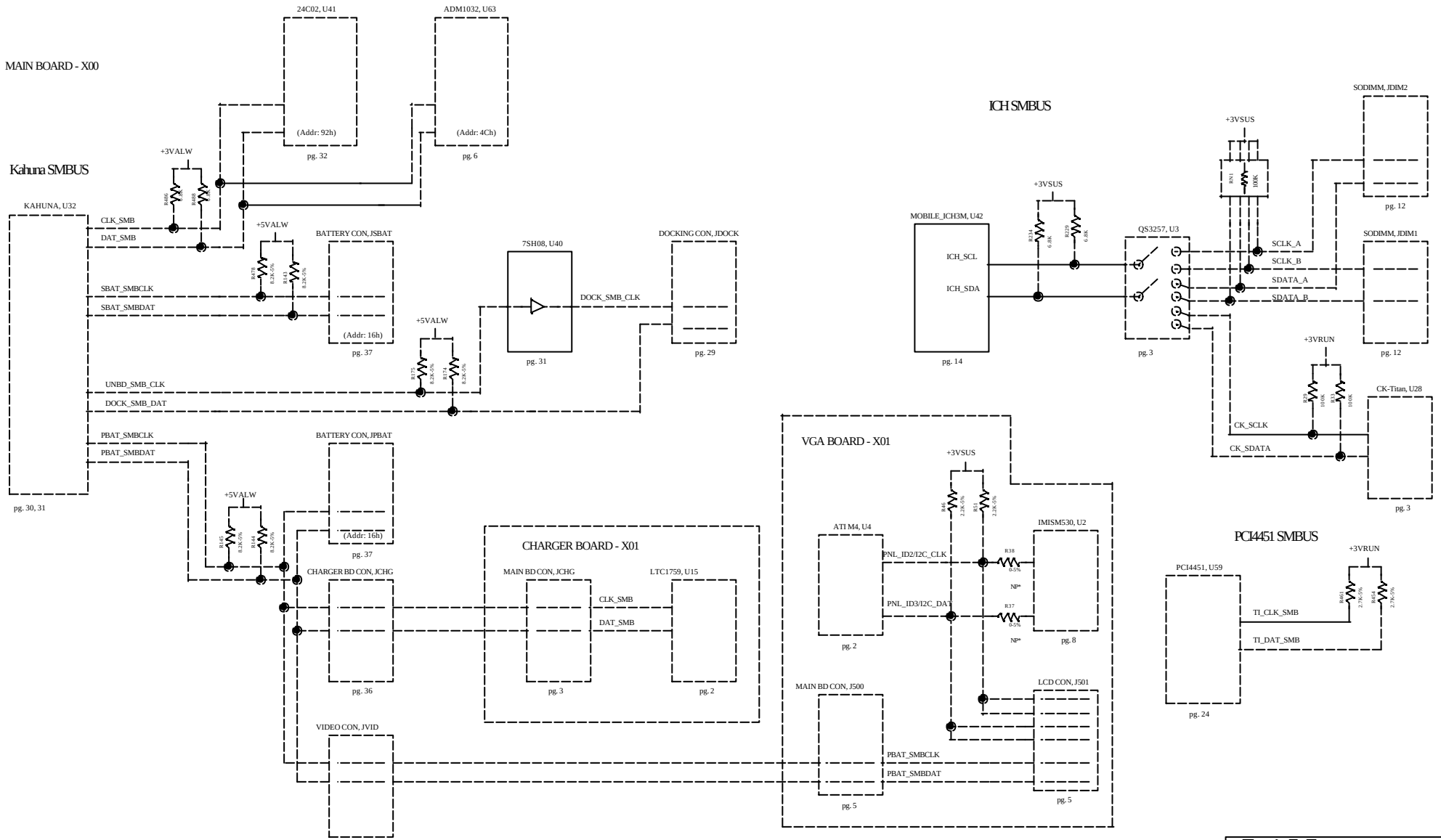

PROPRIETARY NOTE: THIS ITEM IS THE PROPERTY OF DELL COMPUTER CORP, AUSTIN, TEXAS AND CONTAINS CONFIDENTIAL AND TRADE SECRET INFORMATION. THIS ITEM MAY NOT BE TRANSFERRED FROM THE CUSTODY OF DELL COMPUTER CORP. EXCEPT AS AUTHORIZED BY DELL COMPUTER CORP., AND THEN ONLY BY WAY OF LOAN FOR LIMITED PURPOSES. IT MUST NOT BE REPRODUCED IN WHOLE OR IN PART AND MUST BE RETURNED TO DELL COMPUTER CORP. UPON REQUEST AND IN ALL EVENTS UPON COMPLETION OF THE PURPOSE OF THE LOAN. NEITHER THIS ITEM OR THE INFORMATION IT CONTAINS MAY BE USED BY OR DISCLOSED TO PERSONS NOT HAVING A NEED FOR SUCH USE OR DISCLOSURE CONSISTENT WITH THE PURPOSE OF THE LOAN WITHOUT THE PRIOR WRITTEN CONSENT OF DELL COMPUTER CORPORATION.

DELL COMPUTER CORPORATION AUSTIN,TEXAS

TITLE: SCHEMATIC, M/B LA-1221

DWG NO. 401195 REV. 4A

DATE: 11/15/02 SHEET 96 OF 102

REFDES	PAGE
B_VID0	6
B_VID1	6
B_VID2	6
B_VID3	6
B_VID4	6
C1	34
C2	34
C3	34
C4	34
C5	34
C6	34
C7	34
C8	34
C9	34
C10	12
C11	12
C12	12
C13	12
C14	12
C15	35
C16	35
C17	35
C18	35
C19	34
C20	34
C21	34
C22	34
C23	34
C24	34
C25	34
C26	34
C27	34
C28	34
C29	34
C30	34
C31	34
C32	34
C33	40
C34	18
C35	18
C36	34
C37	12
C38	12
C39	12
C40	12
C41	12
C42	12
C43	35
C44	35
C45	29
C46	40
C47	18
C48	18
C49	40
C50	40
C51	40
C52	40
C53	40
C54	40
C55	40
C56	40
C57	40
C58	40
C59	40
C60	40
C61	34
C62	29
C63	36
C64	40
C65	29
C66	18
C67	18
C68	18
C69	18
C70	36
C71	34
C72	29
C73	36
C74	36
C75	40
C76	29
C77	40
C78	18
C79	39
C80	39
C81	40
C82	39
C83	18
C84	36
C85	18
C86	34
C87	34
C88	40
C89	40
C90	34
C91	38
C92	40
C93	34
C94	39
C95	40
C96	30
C97	35
C98	40
C99	29
C100	40
C101	40
C102	40
C103	40
C104	40
C105	40
C106	40
C107	21
C108	40
C109	40
C110	4
C111	40
C112	40
C113	40
C114	4
C115	19
C116	39
C117	21
C118	21
C119	10
C120	33
C121	10
C122	33
C123	19
C124	33
C125	21
C126	10
C127	10
C128	38
C129	10
C130	33
C131	19
C132	21
C133	10
C134	19
C135	20
C136	17
C137	19
C138	21
C139	10
C140	19
C141	38
C142	17
C143	19
C144	21
C145	35
C146	19
C147	8
C148	8
C149	20
C150	20
C151	20
C152	10
C153	10
C154	21
C155	10
C156	17
C157	19
C158	19
C159	10
C160	19
C161	10
C162	19
C163	21
C164	19
C165	11
C166	10
C167	10
C168	8
C169	24
C170	3
C171	10
C172	3
C173	3
C174	3
C175	3
C176	19
C177	8
C178	3
C179	11
C180	10
C183	24
C184	10
C185	3
C186	8
C187	4
C188	4
C189	8
C191	5
C192	24
C193	8
C194	10
C195	8
C196	5
C197	5
C198	24
C199	24
C200	8
C201	8
C202	24
C203	11
C204	5
C205	5
C206	10
C207	4
C208	24
C209	10
C210	8
C211	24
C212	20
C213	20
C214	20
C215	20
C216	5
C217	5
C218	8
C219	10
C220	8
C221	5
C222	5
C223	4
C224	11
C225	3
C227	5
C228	10
C229	24
C230	20
C231	4
C232	4
C233	10
C236	11
C237	10
C238	3
C239	3
C240	3
C241	3
C242	10
C243	9
C244	7
C245	9
C246	9
C247	24
C248	26
C249	26
C250	10
C251	3
C252	10
C253	9
C254	10
C255	10
C256	11
C257	4
C258	3
C259	26
C260	26
C261	24
C262	26
C263	10
C264	9
C265	24
C266	3
C267	11
C268	7
C269	9
C270	9
C271	9
C272	8
C273	9
C274	9
C275	3
C276	3
C277	26
C278	10
C279	10
C280	9
C281	8
C282	9
C283	26
C284	30
C285	31
C286	31
C287	31
C288	31
C289	30
C290	7
C291	9
C292	10
C293	9
C294	9
C295	9
C296	9
C297	9
C298	31
C299	9
C300	26
C301	26
C302	26
C303	26
C304	8
C305	10
C306	9
C307	9
C308	9
C309	4
C310	24
C311	8
C312	10
C313	31
C314	9
C315	9
C316	9
C317	31
C318	9
C319	10
C320	9
C321	9
C322	31
C323	9
C324	9
C325	8
C326	9
C327	9
C328	9
C329	9
C330	9
C331	9
C332	11
C333	10
C334	9
C335	8
C336	39
C337	39

XREF PAGE 1 OF 6

PROPRIETARY NOTE: THIS ITEM IS THE PROPERTY OF DELL COMPUTER CORP, AUSTIN, TEXAS AND CONTAINS CONFIDENTIAL AND TRADE SECRET INFORMATION. THIS ITEM MAY NOT BE TRANSFERRED FROM THE CUSTODY OF DELL COMPUTER CORP. EXCEPT AS AUTHORIZED BY DELL COMPUTER CORP., AND THEN ONLY BY WAY OF LOAN FOR LIMITED PURPOSES. IT MUST NOT BE REPRODUCED IN WHOLE OR IN PART AND MUST BE RETURNED TO DELL COMPUTER CORP. UPON REQUEST AND IN ALL EVENTS UPON COMPLETION OF THE PURPOSE OF THE LOAN. NEITHER THIS ITEM OR THE INFORMATION IT CONTAINS MAY BE USED BY OR DISCLOSED TO PERSONS NOT HAVING A NEED FOR SUCH USE OR DISCLOSURE CONSISTENT WITH THE PURPOSE OF THE LOAN WITHOUT THE PRIOR WRITTEN CONSENT OF DELL COMPUTER CORPORATION.

DELL COMPUTER CORPORATION AUSTIN,TEXAS

TITLE: SCHEMATIC, M/B LA-1221

DWG NO. 401195 REV. 4A

DATE 11/15/02 SHEET 97 OF 102

REFDES	PAGE
C338	9
C339	39
C340	9
C341	9
C342	9
C343	10
C344	9
C345	39
C346	10
C347	23
C348	39
C349	39
C350	39
C351	9
C352	39
C353	27
C354	38
C355	10
C356	10
C357	10
C358	10
C359	10
C360	9
C361	39
C362	27
C363	39
C364	9
C365	39
C366	23
C367	9
C368	9
C369	31
C370	31
C371	8
C372	31
C373	38
C374	23
C375	9
C376	9
C377	9
C378	9
C379	38
C380	23
C381	39
C382	31
C383	38
C384	9
C385	9
C386	38
C387	9
C388	8
C389	8
C390	8
C391	11
C392	11
C393	23
C394	23
C395	9
C396	39
C397	31
C398	31
C399	17
C400	17
C401	17
C402	9
C403	16
C404	16
C405	14
C406	17
C407	27
C408	17
C409	17
C410	27
C411	12
C412	12
C413	17
C414	17
C415	32
C416	14
C417	14
C418	27
C419	27
C420	13
C421	13
C422	27
C423	27
C424	6
C425	11
C426	6
C427	6
C428	32
C429	6
C430	27
C431	32
C432	27
C433	27
C434	32
C435	27
C436	27
C437	39
C438	27
C439	39
C440	27
C441	41
C442	39
C443	39
C444	36
C445	11
C446	14
C447	14
C448	14
C449	36
C450	36
C451	41
C452	41
C453	41
C454	41
C455	41
C456	34
C457	35
C458	39
C459	40
C460	40
C461	40
C462	29
C463	29
C464	29
C465	18
C466	39
C467	21
C468	39
C469	28
C470	28
C471	6
C472	40
C473	39
C474	19
C475	28
C476	39
C477	21
C478	19
C479	19
C480	21
C481	21
C482	21
C483	21
C484	21
C485	19
C486	21
C487	21
C488	21
C489	28
C490	28
C491	19
C492	33
C493	20
C494	19
C495	19
C496	21
C497	21
C498	33
C499	33
C500	40
C501	20
C502	19
C503	19
C504	28
C505	28
C506	19
C507	17
C508	20
C509	21
C510	11
C511	19
C512	21
C513	19
C514	11
C515	19
C516	19
C517	19
C518	19
C519	19
C520	33
C521	40
C522	40
C523	11
C524	19
C525	20
C526	11
C527	19
C528	19
C529	20
C530	11
C531	21
C532	11
C533	19
C534	11
C535	20
C536	20
C537	19
C538	11
C539	19
C540	11
C541	21
C542	21
C543	21
C544	21
C545	21
C546	21
C547	21
C548	11
C549	33
C550	19
C551	19
C552	33
C553	11
C554	40
C555	19
C556	5
C557	5
C558	11
C559	20
C560	19
C561	19
C562	11
C563	19
C564	25
C565	11
C566	21
C567	24
C568	24
C569	20
C570	19
C571	25
C572	4
C573	11
C574	21
C575	19
C576	5
C577	5
C578	11
C579	5
C580	5
C581	11
C582	20
C583	20
C584	20
C585	24
C586	11
C587	22
C588	22
C589	22
C590	25
C591	11
C592	5
C593	5
C594	5
C595	20
C596	20
C597	25
C598	5
C599	11
C600	5
C601	5
C602	5
C603	24
C604	5
C605	11
C606	20
C607	20
C608	20
C609	20
C610	11
C611	5
C612	11
C613	5
C614	5
C615	5
C616	5
C617	11
C618	20
C619	20
C620	5
C621	5
C622	20
C623	25
C624	5
C625	11
C626	24
C627	25
C628	24
C629	11
C630	11
C631	22
C632	5
C633	5
C634	26
C635	25
C636	11
C637	5
C638	5
C639	25
C640	11
C641	26
C642	25
C643	11
C644	22
C645	25
C646	11
C647	5
C648	5
C649	11
C650	5
C651	5
C652	11
C653	25
C654	11
C655	22
C656	11
C657	11
C658	24
C659	11
C660	25
C661	6
C662	11
C663	24
C664	26
C665	24
C666	25
C667	11
C668	11
C669	6
C670	26
C671	11
C672	11
C673	11

XREF PAGE 2 OF 6

PROPRIETARY NOTE: THIS ITEM IS THE PROPERTY OF DELL COMPUTER CORP, AUSTIN, TEXAS AND CONTAINS CONFIDENTIAL AND TRADE SECRET INFORMATION. THIS ITEM MAY NOT BE TRANSFERRED FROM THE CUSTODY OF DELL COMPUTER CORP. EXCEPT AS AUTHORIZED BY DELL COMPUTER CORP., AND THEN ONLY BY WAY OF LOAN FOR LIMITED PURPOSES. IT MUST NOT BE REPRODUCED IN WHOLE OR IN PART AND MUST BE RETURNED TO DELL COMPUTER CORP. UPON REQUEST AND IN ALL EVENTS UPON COMPLETION OF THE PURPOSE OF THE LOAN. NEITHER THIS ITEM OR THE INFORMATION IT CONTAINS MAY BE USED BY OR DISCLOSED TO PERSONS NOT HAVING A NEED FOR SUCH USE OR DISCLOSURE CONSISTENT WITH THE PURPOSE OF THE LOAN WITHOUT THE PRIOR WRITTEN CONSENT OF DELL COMPUTER CORPORATION.

DELL COMPUTER CORPORATION AUSTIN,TEXAS

TITLE: SCHEMATIC, M/B LA-1221

DWG NO. 401195 REV. 4A

DATE 11/15/02 SHEET 98 OF 102

REFDES	PAGE
C674	11
C675	11
C676	26
C677	26
C678	11
C679	38
C680	38
C681	26
C682	11
C683	11
C684	9
C685	11
C686	26
C687	26
C688	35
C689	11
C690	11
C691	11
C692	35
C693	16
C694	16
C695	9
C696	11
C697	41
C698	11
C699	32
C700	41
C701	41
C702	22
C703	16
C704	32
C705	32
C706	32
C707	32
C708	41
C709	11
C710	16
C711	41
C712	41
C713	16
C714	32
C715	41
C716	41
C717	16
C718	12
C719	32
C720	16
C721	32
C722	13
C723	32
C724	32
C725	32
C726	32
C727	11
C728	11
C729	16
C730	32
C731	32
C732	11
C733	16
C734	6
C735	16
C736	11
C737	32
C738	12
C739	12
C740	12
C741	32
C742	11
C743	11
C744	16
C745	41
C746	32
C747	31
C748	16
C749	32
C750	32
C751	11
C752	14
C753	12
C754	11
C755	16
C756	32
C757	32
C758	41
C759	13
C760	13
C761	32
C762	32
C763	32
C764	41
C765	16
C766	16
C767	32
C768	35
C769	16
C770	12
C771	12
C772	12
C773	35
C774	35
C775	35
C776	41
C777	16
C778	16
C779	16
C780	41
C781	16
C782	32
C783	41
C784	41
C785	41
C786	16
C787	16
C788	41
C789	16
C790	16
C791	16
C792	16
C793	32
C794	16
C795	39
C796	39
C797	39
C798	39
C799	16
C800	41
C801	41
C802	27
C803	16
C804	16
C805	16
C806	16
C807	16
C808	16
C809	36
C810	41
C811	41
C812	41
C813	16
C814	16
C815	39
C816	39
C817	39
C818	38
C819	37
C820	37
C821	36
C822	36
C823	30
C824	40
C825	19
C826	20
C827	20
C828	36
C829	36
C831	36
C832	36
C833	39
C834	33
C835	33
C836	33
C837	19
C838	33
CLP1	42
CLP2	42
CLP3	42
CLP4	42
CLP5	42
CLP6	42
CLP7	42
CLP8	42
CLP9	42
CLP10	42
CLP12	42
CLP13	42
CLP14	42
CLP15	42
CLP17	42
CLP18	42
CLP19	42
CLP20	42
CLP21	42
CLP22	42
CLP23	42
CLP24	42
CLP25	42
CLP26	42
CLP27	42
CLP28	42
CLP29	42
CLP30	42
CLP31	42
CLP32	42
CLP33	42
CLP34	42
CLP35	42
CLP36	42
CLP37	42
CLP38	42
CMOS_CLR	14
D1	12
D2	12
D3	12
D4	12
D5	40
D6	40
D7	40
D8	8
D9	8
D10	8
D11	24
D12	39
D13	41
D14	30
D15	36
D16	36
D17	41
D18	41
D19	34
D20	40
D21	40
D22	28
D23	28
D24	33
D25	33
D26	39
D27	39
D28	41
D29	16
D30	16
D31	41
D32	41
D33	41
D34	41
D35	41
D36	16
D37	16
D38	36
D39	37
D40	37
D41	37
D42	37
D43	37
D44	37
D45	36
D46	41
FS2	36
FS3	35
J1394	26
JAUD_OUT	20
JCBUS	25
JCD	17
JCHG	36
JCPU	5
JCPU	4
JCPU	4
JCPU	5
JDCIN	36
JDEBUG	30
JDIM0	10
JDIM1	10
JDOCK	29
JFAN1	33
JFAN2	33
JHDD	17
JKYBRD	32
JLED	35
JLINE_IN	20
JLOM	22
JLPT	34
JMDC	22
JMIC	20
JMOD	17
JPALM	32
JPBAT	37
JPCI	27
JPS2	35
JSBAT	37
JSIO	34
JSVID	12
JUSB	18
JVGA	12
JVID	11
L1	12
L2	35
L3	35
L4	35
L5	35
L6	12
L7	12
L8	12
L9	12
L10	34
L11	34
L12	34
L13	34
L14	34
L15	34
L16	34
L17	34
L18	34
L19	34
L20	34
L21	18
L22	18
L23	18
L24	18
L25	18
L26	18
L27	18
L28	35
L29	18
L30	21
L31	21
L32	21
L33	21
L34	3
L35	4
L36	3
L37	26
L38	4
L39	26
L40	31
L41	9
L42	27
L43	32
L44	39
L45	36
L46	40
L47	40
L48	20
L49	21
L50	20
L51	8
L52	20

XREF PAGE 3 OF 6

PROPRIETARY NOTE: THIS ITEM IS THE PROPERTY OF DELL COMPUTER CORP, AUSTIN, TEXAS AND CONTAINS CONFIDENTIAL AND TRADE SECRET INFORMATION. THIS ITEM MAY NOT BE TRANSFERRED FROM THE CUSTODY OF DELL COMPUTER CORP. EXCEPT AS AUTHORIZED BY DELL COMPUTER CORP., AND THEN ONLY BY WAY OF LOAN FOR LIMITED PURPOSES. IT MUST NOT BE REPRODUCED IN WHOLE OR IN PART AND MUST BE RETURNED TO DELL COMPUTER CORP. UPON REQUEST AND IN ALL EVENTS UPON COMPLETION OF THE PURPOSE OF THE LOAN. NEITHER THIS ITEM OR THE INFORMATION IT CONTAINS MAY BE USED BY OR DISCLOSED TO PERSONS NOT HAVING A NEED FOR SUCH USE OR DISCLOSURE CONSISTENT WITH THE PURPOSE OF THE LOAN WITHOUT THE PRIOR WRITTEN CONSENT OF DELL COMPUTER CORPORATION.

DELL COMPUTER CORPORATION AUSTIN,TEXAS

TITLE: SCHEMATIC, M/B LA-1221

DWG NO. 401195 REV. 4A

DATE 11/15/02 SHEET 99 OF 102

REFDES	PAGE
L53	20
L54	25
L55	25
L56	20
L57	20
L58	26
L59	39
L60	9
L61	41
L62	12
L63	12
L64	32
L65	12
L66	12
L67	12
L68	32
L69	39
L70	41
MHA1	42
MHA2	42
MHA3	42
MHA4	42
MHA5	42
MHA6	42
MHA7	42
MHA8	42
MHA9	42
MHA10	42
MHA11	42
MHB1	42
MHB2	42
MHB3	42
MHB4	42
P1	6
PAD1	42
PAD2	42
PAD3	42
PAD4	42
PAD5	42
PAD6	42
Q1	40
Q2	40
Q3	40
Q4	40
Q5	38
Q6	35
Q7	29
Q8	29
Q9	29
Q10	36
Q11	38
Q12	35
Q13	22
Q14	33
Q15	33
Q16	38
Q17	35
Q18	38
Q19	33
Q20	8
Q21	8
Q22	3
Q23	3
Q24	4
Q25	3
Q26	3
Q27	38
Q28	38
Q29	38
Q30	38
Q31	23
Q32	38
Q33	38
Q34	38
Q35	36
Q36	39
Q37	39
Q38	38
Q39	40
Q40	40
Q41	40
Q42	40
Q43	40
Q44	40
Q45	40
Q46	40
Q47	33
Q48	40
Q49	40
Q50	38
Q51	38
Q52	39
Q53	38
Q54	27
Q55	39
Q56	38
Q57	27
Q58	41
Q59	41
Q60	41
Q61	39
Q62	39
Q63	41
Q64	39
Q65	38
Q66	36
Q67	36
Q68	38
Q69	41
Q70	41
Q71	41
Q72	41
Q73	33
Q74	33
Q75	33
Q76	33
Q77	13
Q78	8
Q79	39
Q80	21
Q81	11
R1	12
R2	12
R3	12
R4	12
R5	12
R6	12
R7	35
R8	35
R9	35
R10	35
R11	34
R12	34
R13	34
R14	12
R15	12
R16	40
R17	34
R18	34
R19	34
R20	34
R21	34
R22	40
R23	40
R24	40
R25	34
R26	40
R27	40
R28	34
R29	34
R30	34
R31	34
R32	34
R33	29
R34	29
R35	40
R36	40
R37	34
R38	34
R39	34
R40	34
R41	34
R42	34
R43	34
R44	34
R45	34
R46	40
R47	18
R48	34
R49	40
R50	39
R51	38
R52	29
R53	29
R54	18
R55	34
R56	29
R57	40
R58	36
R59	18
R60	18
R61	35
R62	40
R63	40
R64	40
R65	6
R66	30
R67	40
R68	30
R69	40
R70	40
R71	21
R72	21
R73	21
R74	35
R75	4
R76	4
R77	20
R78	4
R79	4
R80	4
R81	4
R82	39
R83	39
R84	4
R85	22
R86	21
R87	10
R88	20
R89	21
R90	21
R91	10
R92	38
R93	33
R94	19
R95	21
R96	38
R97	33
R98	22
R99	21
R100	21
R101	19
R102	21
R103	21
R104	38
R105	35
R106	21
R107	8
R108	8
R109	4
R110	33
R111	4
R112	3
R113	3
R114	3
R115	3
R116	3
R117	3
R118	3
R119	3
R120	22
R121	21
R122	21
R123	24
R124	3
R125	24
R126	3
R127	3
R128	3
R129	20
R130	20
R131	8
R132	4
R133	4
R134	4
R135	24
R136	4
R137	20
R138	20
R139	4
R140	24
R141	24
R142	4
R143	24
R144	20
R145	3
R146	3
R147	3
R148	3
R149	3
R150	3
R151	7
R152	3
R153	3
R154	7
R155	24
R156	3
R157	3
R158	3
R159	3
R160	3
R161	3
R162	3
R163	3
R164	3
R165	4
R166	3
R167	4
R168	3
R169	3
R170	3
R171	3
R172	3
R173	3
R174	3
R175	3
R176	3
R177	3
R178	7
R179	26
R180	23
R181	23
R182	38
R183	38
R184	38
R185	7
R186	4
R187	31
R188	31
R189	30
R190	30
R191	30
R192	31
R193	7
R194	26
R195	31
R196	23
R197	23
R198	7
R199	7
R200	4
R201	4
R202	4
R203	4
R204	4
R205	23
R206	23
R207	26
R208	30
R209	8
R210	41
R211	8
R212	23
R213	23
R214	8
R215	39

XREF PAGE 4 OF 6

PROPRIETARY NOTE: THIS ITEM IS THE PROPERTY OF DELL COMPUTER CORP, AUSTIN, TEXAS AND CONTAINS CONFIDENTIAL AND TRADE SECRET INFORMATION. THIS ITEM MAY NOT BE TRANSFERRED FROM THE CUSTODY OF DELL COMPUTER CORP. EXCEPT AS AUTHORIZED BY DELL COMPUTER CORP., AND THEN ONLY BY WAY OF LOAN FOR LIMITED PURPOSES. IT MUST NOT BE REPRODUCED IN WHOLE OR IN PART AND MUST BE RETURNED TO DELL COMPUTER CORP. UPON REQUEST AND IN ALL EVENTS UPON COMPLETION OF THE PURPOSE OF THE LOAN. NEITHER THIS ITEM OR THE INFORMATION IT CONTAINS MAY BE USED BY OR DISCLOSED TO PERSONS NOT HAVING A NEED FOR SUCH USE OR DISCLOSURE CONSISTENT WITH THE PURPOSE OF THE LOAN WITHOUT THE PRIOR WRITTEN CONSENT OF DELL COMPUTER CORPORATION.

DELL COMPUTER CORPORATION AUSTIN,TEXAS

TITLE: SCHEMATIC, M/B LA-1221

DWG NO. 401195 REV. 4A

DATE 11/15/02 SHEET 100 OF 102

REFDES	PAGE
R216	23
R217	31
R218	31
R219	39
R220	23
R221	30
R222	39
R223	30
R224	31
R225	31
R226	13
R227	38
R228	10
R229	39
R230	38
R231	30
R232	9
R233	39
R234	30
R235	27
R236	30
R237	30
R238	11
R239	10
R240	8
R241	30
R242	38
R243	11
R244	8
R245	8
R246	38
R247	38
R248	11
R249	11
R250	11
R251	23
R252	11
R253	23
R254	11
R255	11
R256	23
R257	11
R258	8
R259	8
R260	23
R261	17
R262	38
R263	11
R264	31
R265	31
R266	36
R267	36
R268	36
R269	4
R270	17
R271	8
R272	8
R273	23
R274	13
R275	17
R276	17
R277	17
R278	14
R279	17
R280	27
R281	27
R282	27
R283	14
R284	15
R285	14
R286	17
R287	27
R288	12
R289	31
R290	14
R291	14
R292	14
R293	14
R294	13
R295	15
R296	6
R297	13
R298	17
R299	6
R300	13
R301	6
R302	6
R303	13
R304	13
R305	17
R306	6
R307	6
R308	6
R309	6
R310	17
R311	41
R312	41
R313	41
R314	41
R315	41
R316	6
R317	6
R318	6
R319	27
R320	41
R321	41
R322	6
R323	6
R324	6
R325	13
R326	13
R327	32
R328	27
R329	13
R330	39
R331	36
R332	14
R333	14
R334	14
R335	15
R336	14
R337	39
R338	14
R339	14
R340	36
R341	38
R342	41
R343	37
R344	30
R345	36
R346	36
R347	36
R348	36
R349	36
R350	41
R351	34
R352	34
R353	34
R354	34
R355	35
R356	18
R357	40
R358	40
R359	40
R360	39
R361	39
R362	40
R363	40
R364	40
R365	6
R366	39
R367	36
R368	6
R369	19
R370	19
R371	19
R372	6
R373	33
R374	40
R375	21
R376	21
R377	6
R378	19
R379	19
R380	6
R381	21
R382	28
R383	21
R384	20
R385	28
R386	19
R387	19
R388	33
R389	33
R390	6
R391	19
R392	6
R393	20
R394	19
R395	19
R396	19
R397	19
R398	19
R399	19
R400	19
R401	17
R402	19
R403	33
R404	28
R405	28
R406	28
R407	19
R408	19
R409	33
R410	20
R411	21
R412	13
R413	19
R414	33
R415	33
R416	19
R417	19
R418	33
R419	40
R420	40
R421	28
R422	21
R423	21
R424	30
R425	33
R426	19
R427	19
R428	20
R429	19
R430	20
R431	4
R432	4
R433	4
R434	4
R435	21
R436	4
R437	19
R438	21
R439	21
R440	20
R441	20
R442	24
R443	4
R444	20
R445	20
R446	22
R447	22
R448	22
R449	22
R450	21
R451	20
R452	22
R453	20
R454	20
R455	3
R456	22
R457	20
R458	20
R459	24
R460	20
R461	20
R462	20
R463	24
R464	26
R465	26
R466	26
R467	26
R468	26
R469	26
R470	24
R471	22
R472	22
R473	24
R474	26
R475	22
R476	24
R477	26
R478	24
R479	17
R480	26
R481	26
R482	26
R483	26
R484	24
R485	26
R486	6
R487	30
R488	24
R489	6
R490	24
R491	24
R492	6
R493	38
R494	6
R495	38
R496	4
R497	4
R498	4
R499	38
R500	38
R501	4
R502	35
R503	38
R504	27
R505	11
R506	9
R507	8
R508	8
R509	11
R510	11
R511	11
R512	11
R513	11
R514	11
R515	11
R516	11
R517	7
R518	7
R519	11
R520	11
R521	11
R522	41
R523	35
R524	14
R525	14
R526	22
R527	16
R528	11
R529	11
R530	13
R531	11
R533	16
R534	15
R535	14
R536	11
R537	15
R538	15
R539	15
R540	35
R541	11
R542	13
R543	11
R544	12
R545	12
R546	12
R547	35
R548	32
R549	32
R550	35
R551	13
R552	35

XREF PAGE 5 OF 6

PROPRIETARY NOTE: THIS ITEM IS THE PROPERTY OF DELL COMPUTER CORP, AUSTIN, TEXAS AND CONTAINS CONFIDENTIAL AND TRADE SECRET INFORMATION. THIS ITEM MAY NOT BE TRANSFERRED FROM THE CUSTODY OF DELL COMPUTER CORP. EXCEPT AS AUTHORIZED BY DELL COMPUTER CORP., AND THEN ONLY BY WAY OF LOAN FOR LIMITED PURPOSES. IT MUST NOT BE REPRODUCED IN WHOLE OR IN PART AND MUST BE RETURNED TO DELL COMPUTER CORP. UPON REQUEST AND IN ALL EVENTS UPON COMPLETION OF THE PURPOSE OF THE LOAN. NEITHER THIS ITEM OR THE INFORMATION IT CONTAINS MAY BE USED BY OR DISCLOSED TO PERSONS NOT HAVING A NEED FOR SUCH USE OR DISCLOSURE CONSISTENT WITH THE PURPOSE OF THE LOAN WITHOUT THE PRIOR WRITTEN CONSENT OF DELL COMPUTER CORPORATION.

DELL COMPUTER CORPORATION AUSTIN,TEXAS

TITLE: SCHEMATIC, M/B LA-1221

DWG NO. 401195 REV. 4A

DATE 11/15/02 SHEET 101 OF 102

REFDES PAGE

R553.....14
R554.....14
R555.....13
R556.....14
R557.....14
R558.....13
R559.....14
R560.....13
R561.....13
R562.....39
R563.....14
R564.....14
R565.....39
R566.....13
R567.....39
R568.....39
R569.....14
R570.....39
R571.....36
R572.....39
R573.....16
R574.....13
R575.....16
R576.....39
R577.....39
R578.....38
R579.....39
R580.....37
R581.....37
R582.....37
R583.....39
R584.....37
R585.....37
R586.....37
R587.....36
R588.....37
R589.....41
R590.....36
R591.....38
R592.....36
R593.....41
R594.....41
R595.....33
R596.....33
R597.....33
R598.....33
R599.....33
R600.....16
R601.....16
R602.....17
R603.....17
R604.....30
R605.....30
R606.....13
R607.....8
R608.....8

REFDES PAGE

R609.....39
R610.....6
R611.....19
R612.....35
R613.....19
R614.....8
R615.....8
R616.....13
R617.....30
R618.....6
R619.....8
R620.....8
R621.....8
R622.....8
R623.....39
R624.....8
R625.....33
R631.....11
R632.....33
R633.....33
R634.....33
R635.....33
R636.....33
R637.....33
R638.....33
R639.....33
R640.....33
R641.....19
R642.....33
R643.....33
R644.....35
RN1.....30
RN2.....6
RN3.....22
RN4.....6
RN5.....11
RN6.....11
RN7.....11
RN8.....11
RN9.....4
RN10.....11
RN11.....17
RN12.....17
RN13.....17
RN14.....13
RN15.....42
RN15.....13
RN16.....13
RN17.....14
RN18.....13
RN19.....13
RN20.....7
RN21.....10
RN22.....7
RN23.....10
RN24.....7

REFDES PAGE

RN25.....10
RN26.....7
RN27.....10
RN28.....7
RN29.....10
RN30.....7
RN31.....10
RN32.....7
RN33.....10
RN34.....7
RN35.....10
RN36.....7
RN37.....10
RN38.....10
RN39.....7
RN40.....10
RN41.....7
RN42.....10
RN43.....7
RN44.....10
RN45.....7
RN46.....10
RN47.....7
RN48.....10
RN49.....7
RN50.....10
RN51.....7
RN52.....10
RN53.....7
RN54.....10
RN55.....7
RN56.....10
RN57.....10
RN58.....7
RN59.....10
RN62.....7
RN63.....10
RN64.....7
RN66.....10
RN68.....7
RN69.....10
RN71.....7
RN72.....10
RN74.....7
RN75.....10
RN77.....7
RN78.....10
RN80.....7
RN81.....10
RN82.....7
RN83.....7
RN84.....10
RN85.....10
RN86.....10
RN87.....7
RN88.....10

REFDES PAGE

RN89.....7
RN90.....10
RN91.....7
RN92.....10
RN93.....7
RN94.....10
RN95.....7
RN96.....10
RN97.....7
RN98.....10
RN99.....7
RN100.....10
RN101.....7
RN102.....10
RN103.....7
RN104.....10
RN105.....7
RN106.....10
RN107.....7
RN108.....10
RN109.....7
RN110.....10
RN111.....7
RN112.....10
RN113.....7
RN114.....10
RN115.....7
RN116.....10
RN117.....10
RN118.....7
RN119.....7
RN120.....10
RN121.....10
RN122.....7
RN123.....7
RN124.....10
RN125.....10
RN126.....7
RN127.....4
RN128.....7
RN129.....10
RN130.....10
RN131.....7
RN132.....7
RN133.....10
RS3_A.....32
RS3_B.....32
TP3COM....21
TP_GND....30
TP_SMBCL..30
TP_SMBDA..30
U1.....29
U2.....42
U2.....34
U3.....18
U4.....40

REFDES PAGE

U5.....34
U6.....34
U7.....30
U8.....28
U9.....28
U10.....28
U11.....30
U12.....42
U12.....35
U13.....6
U14.....22
U15.....19
U16.....21
U17.....28
U18.....28
U19.....28
U20.....38
U21.....19
U22.....22
U23.....20
U24.....8
U25.....20
U26.....3
U27.....23
U28.....31
U29.....15
U30.....39
U31.....31
U31.....30
U32.....38
U33.....38
U34.....23
U35.....23
U36.....17
U37.....12
U38.....31
U39.....32
U40.....16
U40.....15
U40.....14
U40.....13
U41.....17
U42.....39
U43.....39
U44.....42
U44.....41
U45.....37
U46.....28
U47.....39
U48.....19
U49.....33
U50.....19
U51.....19
U52.....21
U53.....22
U54.....20

REFDES PAGE

U55.....24
U55.....24
U56.....17
U57.....25
U58.....26
U59.....6
U60.....9
U60.....9
U60.....7
U60.....8
U60.....7
U61.....35
U61.....33
U62.....35
U63.....6
U64.....41
U65.....35
U66.....39
U67.....39
U68.....11
U69.....36
U70.....35
U71.....42
U71.....41
U72.....41
U73.....33
U74.....8
U75.....30
U76.....30
U77.....39
U78.....42
U78.....35
U79.....22
U80.....33
U81.....33
U82.....33
U83.....22
VCCSENSE...4
VSSSENSE...4
WP1.....42
WP2.....42
WP3.....42
WP4.....42
X2.....30
X3.....14
X4.....26
X5.....3
X6.....21
X7.....19
R666....40
R667....36
C852....8
C855....8
C853....39
C854....39
C844....40
C845....40

REFDES PAGE

C846....40
C847....40
C848....40
C849....40
C850....41
C851....41

XREF PAGE 6 OF 6

PROPRIETARY NOTE: THIS ITEM IS THE PROPERTY OF DELL COMPUTER CORP, AUSTIN, TEXAS AND CONTAINS CONFIDENTIAL AND TRADE SECRET INFORMATION. THIS ITEM MAY NOT BE TRANSFERRED FROM THE CUSTODY OF DELL COMPUTER CORP. EXCEPT AS AUTHORIZED BY DELL COMPUTER CORP., AND THEN ONLY BY WAY OF LOAN FOR LIMITED PURPOSES. IT MUST NOT BE REPRODUCED IN WHOLE OR IN PART AND MUST BE RETURNED TO DELL COMPUTER CORP. UPON REQUEST AND IN ALL EVENTS UPON COMPLETION OF THE PURPOSE OF THE LOAN. NEITHER THIS ITEM OR THE INFORMATION IT CONTAINS MAY BE USED BY OR DISCLOSED TO PERSONS NOT HAVING A NEED FOR SUCH USE OR DISCLOSURE CONSISTENT WITH THE PURPOSE OF THE LOAN WITHOUT THE PRIOR WRITTEN CONSENT OF DELL COMPUTER CORPORATION.

DELL COMPUTER CORPORATION AUSTIN,TEXAS

TITLE: SCHEMATIC, M/B LA-1221

DWG NO. 401195 REV. 4A

DATE 11/15/02 SHEET 102 OF 102