Compal Confidential

Schematic Document

Crestline_GM/PM+NB8M-GS & ICH8M

2008 / 3 / 17 Rev:1.0

Security Classification	Compal Secret Data		
Issued Date	2007/1/15	Deciphered Date	2008/1/15

THIS SHEET OF ENGINEERING DRAWING IS THE PROPRIETARY PROPERTY OF COMPAL ELECTRONICS, INC. AND CONTAINS CONFIDENTIAL AND TRADE SECRET INFORMATION. THIS SHEET MAY NOT BE TRANSFERED FROM THE CUSTODY OF THE COMPETENT DIVISION OF R&D DEPARTMENT EXCEPT AS AUTHORIZED BY COMPAL ELECTRONICS, INC. NEITHER THIS SHEET NOR THE INFORMATION IT CONTAINS MAY BE USED BY OR DISCLOSED TO ANY THIRD PARTY WITHOUT PRIOR WRITTEN CONSENT OF COMPAL ELECTRONICS, INC.

Compal Electronics, Inc.

Title: *Cover Sheet*

Size: Custom | Document Number: *LA-4121P* | Rev: 1.0

Date: Tuesday, March 18, 2008 | Sheet 1 of 51

GRATIS - FOR FREE
hexainf@hotmail.com

Compal Confidential

Project Code: ANRJAL3000 (JAL30)

File Name : LA-4121P

JAL30 UMA/Discrete

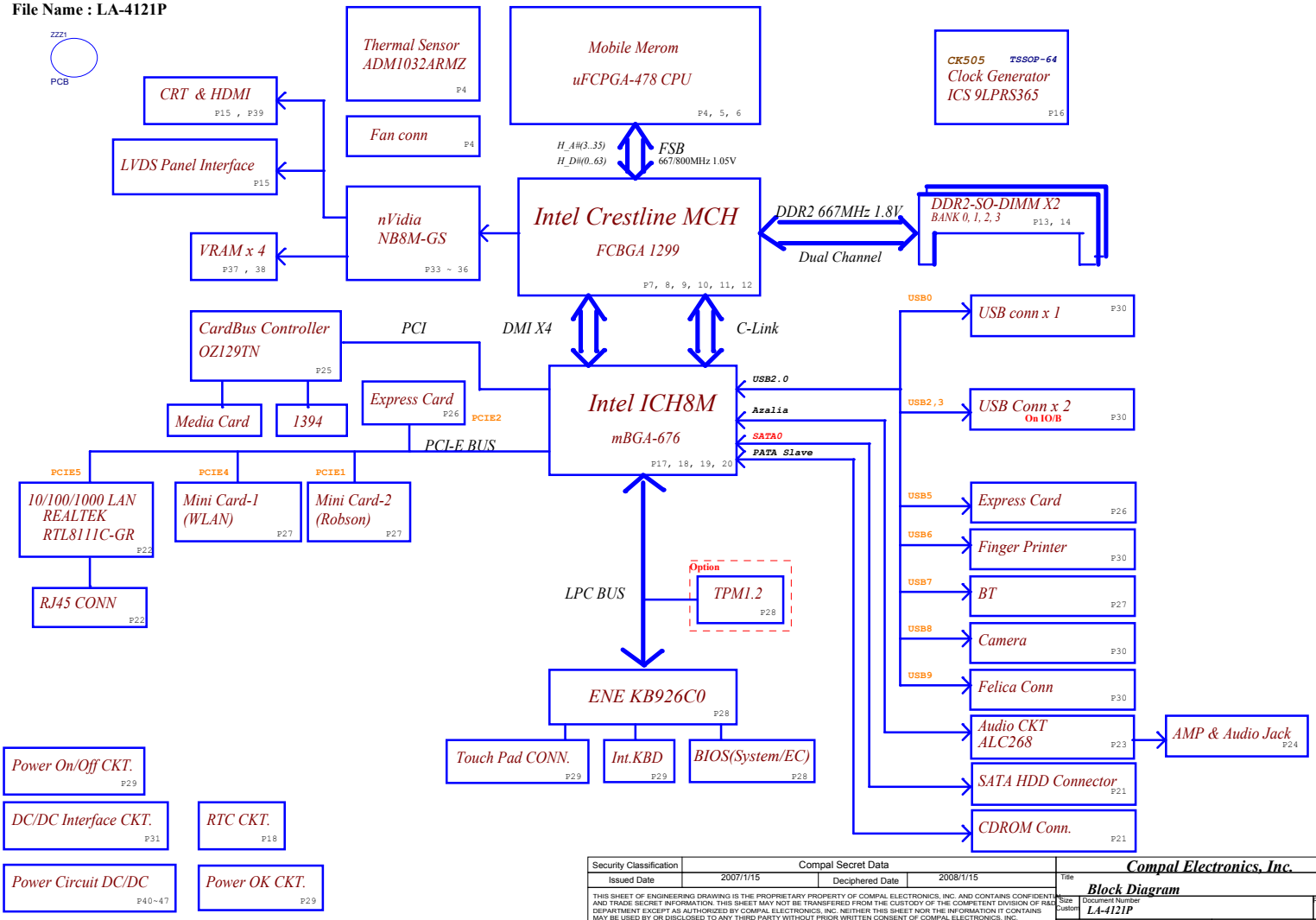

Security Classification	Compal Secret Data		
Issued Date	2007/1/15	Deciphered Date	2008/1/15

THIS SHEET OF ENGINEERING DRAWING IS THE PROPRIETARY PROPERTY OF COMPAL ELECTRONICS, INC. AND CONTAINS CONFIDENTIAL AND TRADE SECRET INFORMATION. THIS SHEET MAY NOT BE TRANSFERED FROM THE CUSTODY OF THE COMPETENT DIVISION OF R&D DEPARTMENT EXCEPT AS AUTHORIZED BY COMPAL ELECTRONICS, INC. NEITHER THIS SHEET NOR THE INFORMATION IT CONTAINS MAY BE USED BY OR DISCLOSED TO ANY THIRD PARTY WITHOUT PRIOR WRITTEN CONSENT OF COMPAL ELECTRONICS, INC.

Compal Electronics, Inc.

Title: **Block Diagram**

Size: Custom | Document Number: LA-4121P | Rev: 1.0

Date: Monday, March 17, 2008 | Sheet 2 of 51

Voltage Rails

O MEANS ON X MEANS OFF

State \ Power plane	+B	+5VALW +3VALW	+1.8V	+5VS +3VS +1.8VS +1.5VS +1.25VS +1.2VS +0.9VS +CPU_CORE +VGA_CORE +VCCP	CLOCK
S0	O	O	O	O	O
S3	O	O	O	X	O
S5 S4/AC	O	O	X	X	O
S5 S4/ Battery only	O	X	X	X	X
S5 S4/AC & Battery don't exist	X	X	X	X	X

STATE \ SIGNAL	SLP_S1#	SLP_S3#	SLP_S4#	SLP_S5#	+VALW	+V	+VS	Clock
Full ON	HIGH	HIGH	HIGH	HIGH	ON	ON	ON	ON
S1 (Power On Suspend)	LOW	HIGH	HIGH	HIGH	ON	ON	ON	LOW
S3 (Suspend to RAM)	LOW	LOW	HIGH	HIGH	ON	ON	OFF	OFF
S4 (Suspend to Disk)	LOW	LOW	LOW	HIGH	ON	OFF	OFF	OFF
S5 (Soft OFF)	LOW	LOW	LOW	LOW	ON	OFF	OFF	OFF

Board ID Table for AD channel

Vcc	3.3V +/- 5%
Ra / Rc	100K +/- 5%

Board ID	Rb / Rd	V_{AD_BID} min	V_{AD_BID} typ	V_{AD_BID} max
0	0	0 V	0 V	0 V
1	8.2K +/- 5%	0.216 V	0.250 V	0.289 V
2	18K +/- 5%	0.436 V	0.503 V	0.538 V
3	33K +/- 5%	0.712 V	0.819 V	0.875 V
4	56K +/- 5%	1.036 V	1.185 V	1.264 V
5	100K +/- 5%	1.453 V	1.650 V	1.759 V
6	200K +/- 5%	1.935 V	2.200 V	2.341 V
7	NC	2.500 V	3.300 V	3.300 V

O MEANS ON
X MEANS OFF

S3 : STR
S4 : STD
S5 : SOFT OFF

External PCI Devices

Device	IDSEL#	REQ#/GNT#	Interrupts
CardBus	AD21	0	PIRQE/PIRQF/PIRQG

BOARD ID Table

Board ID	PCB Revision
0	0.1
1	0.2
2	0.3
3	
4	
5	
6	
7	

BTO Option Table

BTO Item	BOM Structure

EC SM Bus1 address

Device	Address
Smart Battery	0001 011X b?
EEPROM(24C16/02)	1010 000X b?
(24C04)	1011 000Xb?

EC SM Bus2 address

Device	Address
ADM1032	4D

ICH7 SM Bus address

Device	Address
Clock Generator (ICS ICS9LPR310)	1101 001Xb?
DDRII DIMM0	1001 000Xb?
DDRII DIMM2	1001 010Xb?

Security Classification	Compal Secret Data		
Issued Date	2007/1/15	Deciphered Date	2008/1/15

THIS SHEET OF ENGINEERING DRAWING IS THE PROPRIETARY PROPERTY OF COMPAL ELECTRONICS, INC. AND CONTAINS CONFIDENTIAL AND TRADE SECRET INFORMATION. THIS SHEET MAY NOT BE TRANSFERED FROM THE CUSTODY OF THE COMPETENT DIVISION OF R&D DEPARTMENT EXCEPT AS AUTHORIZED BY COMPAL ELECTRONICS, INC. NEITHER THIS SHEET NOR THE INFORMATION IT CONTAINS MAY BE USED BY OR DISCLOSED TO ANY THIRD PARTY WITHOUT PRIOR WRITTEN CONSENT OF COMPAL ELECTRONICS, INC.

Compal Electronics, Inc.

Title: Notes

Size: Custom | Document Number: LA-4121P | Rev: 1.0

Date: Monday, March 17, 2008 | Sheet 3 of 51

GRATIS - FOR FREE
hexainf@hotmail.com

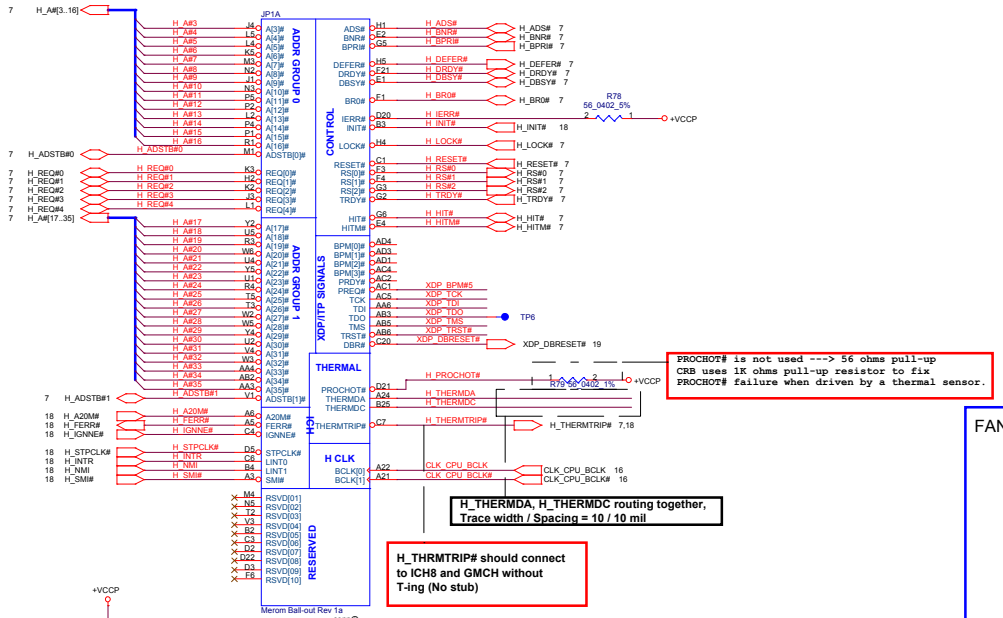

XDP Reserve

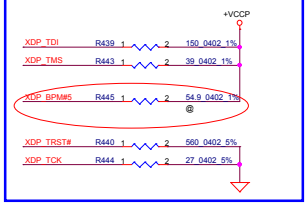

FAN1 Control and Tachometer

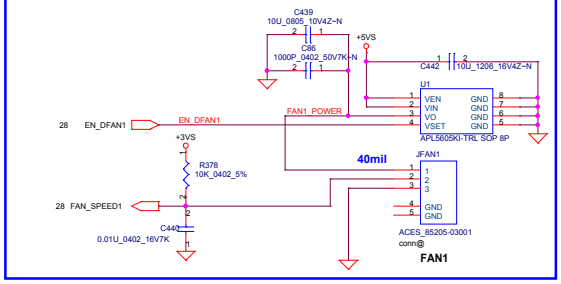

Thermal Sensor EMC1402-2-ACZL-TR

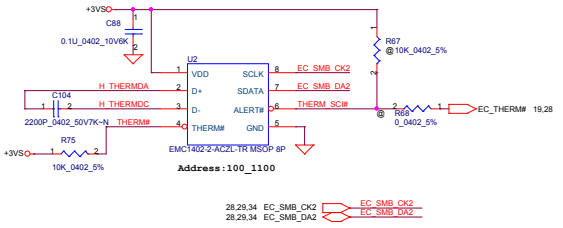

Security Classification	Compal Secret Data		
Issued Date	2007/1/15	Deciphered Date	2008/1/15

THIS SHEET OF ENGINEERING DRAWING IS THE PROPRIETARY PROPERTY OF COMPAL ELECTRONICS, INC. AND CONTAINS CONFIDENTIAL AND TRADE SECRET INFORMATION. THIS SHEET MAY NOT BE TRANSFERED FROM THE CUSTODY OF THE COMPETENT DIVISION OF R&D DEPARTMENT EXCEPT AS AUTHORIZED BY COMPAL ELECTRONICS, INC. NEITHER THIS SHEET NOR THE INFORMATION IT CONTAINS MAY BE USED BY OR DISCLOSED TO ANY THIRD PARTY WITHOUT PRIOR WRITTEN CONSENT OF COMPAL ELECTRONICS, INC.

Compal Electronics, Inc.

Title: Merom(1/3)-AGTL+/XDP

Size: Custom | Document Number: LA-4121P | Rev: 1.0

Date: Monday, March 17, 2008 | Sheet 4 of 51

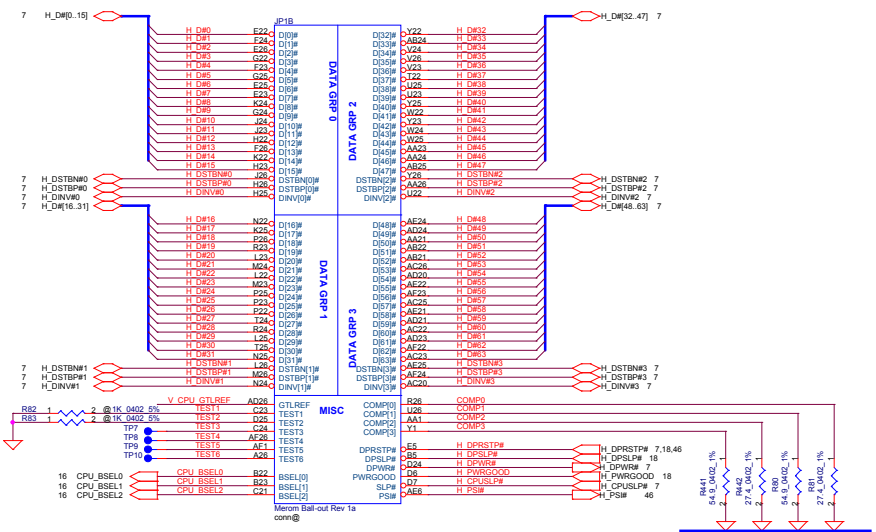

Resistor placed within 0.5" of CPU pin.Trace should be at least 25 mils away from any other toggling signal. COMP[0,2] trace width is 18 mils. COMP[1,3] trace width is 4 mils.

layout note: Route TEST3 & TEST5 traces on ground referenced layer to the TPs

CPU_BSEL	CPU_BSEL2	CPU_BSEL1	CPU_BSEL0
166	0	1	1
200	0	1	0

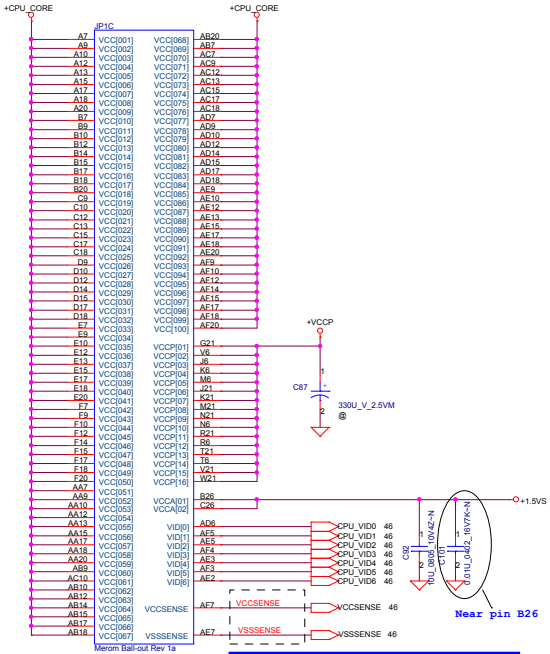

Length match within 25 mils. The trace width/space/other is 20/7/25.

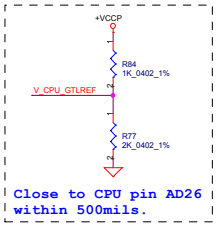

Close to CPU pin AD26 within 500mils.

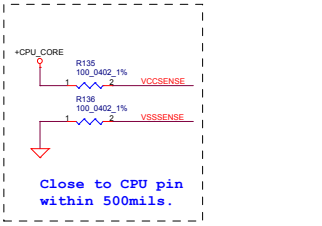

Close to CPU pin within 500mils.

Security Classification	Compal Secret Data		
Issued Date	2007/1/15	Deciphered Date	2008/1/15

THIS SHEET OF ENGINEERING DRAWING IS THE PROPRIETARY PROPERTY OF COMPAL ELECTRONICS, INC. AND CONTAINS CONFIDENTIAL AND TRADE SECRET INFORMATION. THIS SHEET MAY NOT BE TRANSFERED FROM THE CUSTODY OF THE COMPETENT DIVISION OF R&D DEPARTMENT EXCEPT AS AUTHORIZED BY COMPAL ELECTRONICS, INC. NEITHER THIS SHEET NOR THE INFORMATION IT CONTAINS MAY BE USED BY OR DISCLOSED TO ANY THIRD PARTY WITHOUT PRIOR WRITTEN CONSENT OF COMPAL ELECTRONICS, INC.

Compal Electronics, Inc.

Title: Merom(2/3)-AGTL+/PWR

Size: Custom | Document Number: LA-4121P | Rev: 1.0

Date: Monday, March 17, 2008 | Sheet 5 of 51

GRATIS - FOR FREE
hexainf@hotmail.com

High Frequence Decoupling

10uF 0805 X5R -> 85 degree.

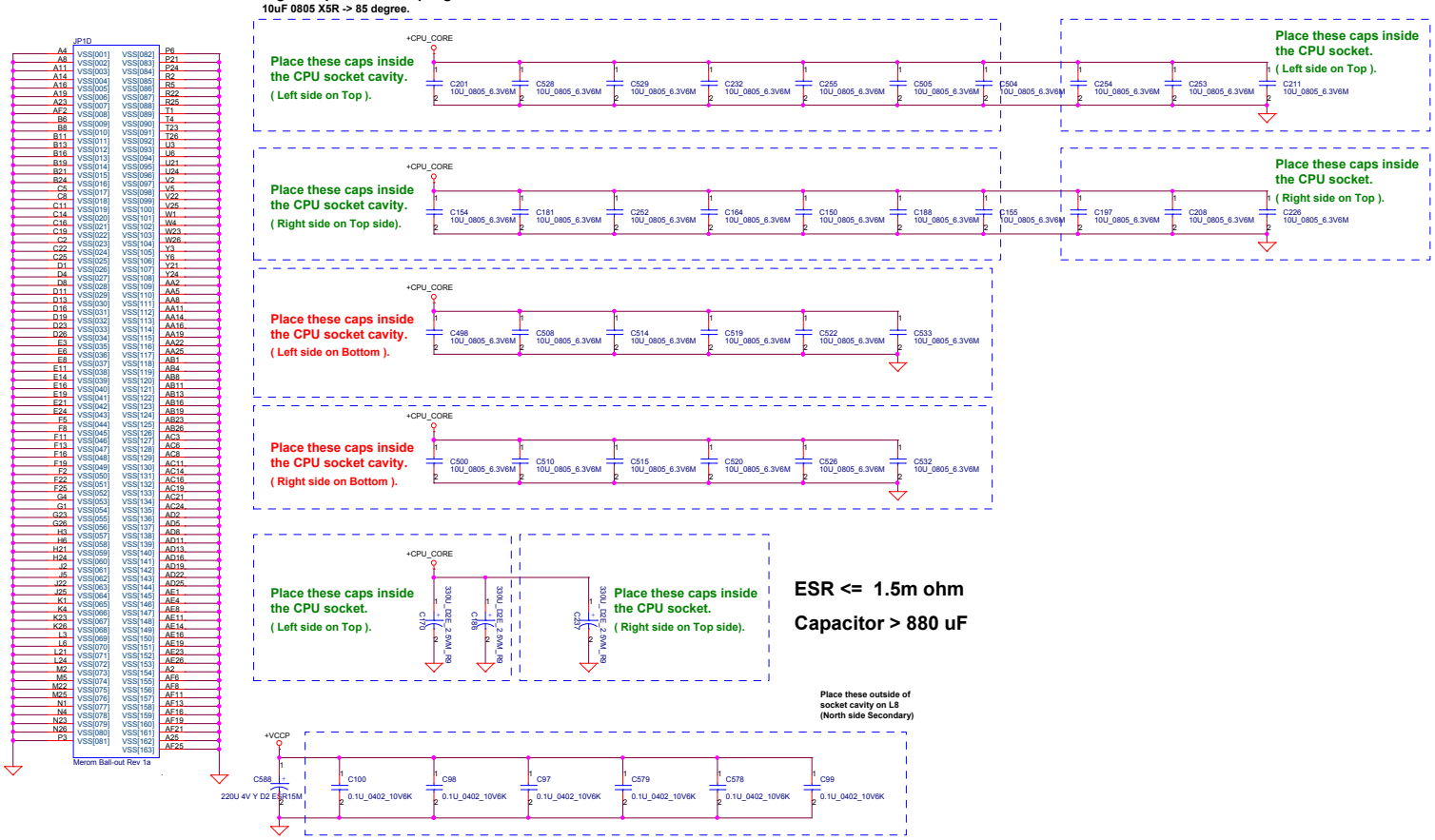

Security Classification	Compal Secret Data		
Issued Date	2007/1/15	Deciphered Date	2008/1/15

THIS SHEET OF ENGINEERING DRAWING IS THE PROPRIETARY PROPERTY OF COMPAL ELECTRONICS, INC. AND CONTAINS CONFIDENTIAL AND TRADE SECRET INFORMATION. THIS SHEET MAY NOT BE TRANSFERED FROM THE CUSTODY OF THE COMPETENT DIVISION OF R&D DEPARTMENT EXCEPT AS AUTHORIZED BY COMPAL ELECTRONICS, INC. NEITHER THIS SHEET NOR THE INFORMATION IT CONTAINS MAY BE USED BY OR DISCLOSED TO ANY THIRD PARTY WITHOUT PRIOR WRITTEN CONSENT OF COMPAL ELECTRONICS, INC.

Compal Electronics, Inc.

Title: **Merom(3/3)-GND&Bypass**

Size: Custom | Document Number: LA-4121P | Rev: 1.0

Date: Monday, March 17, 2008 | Sheet 6 of 51

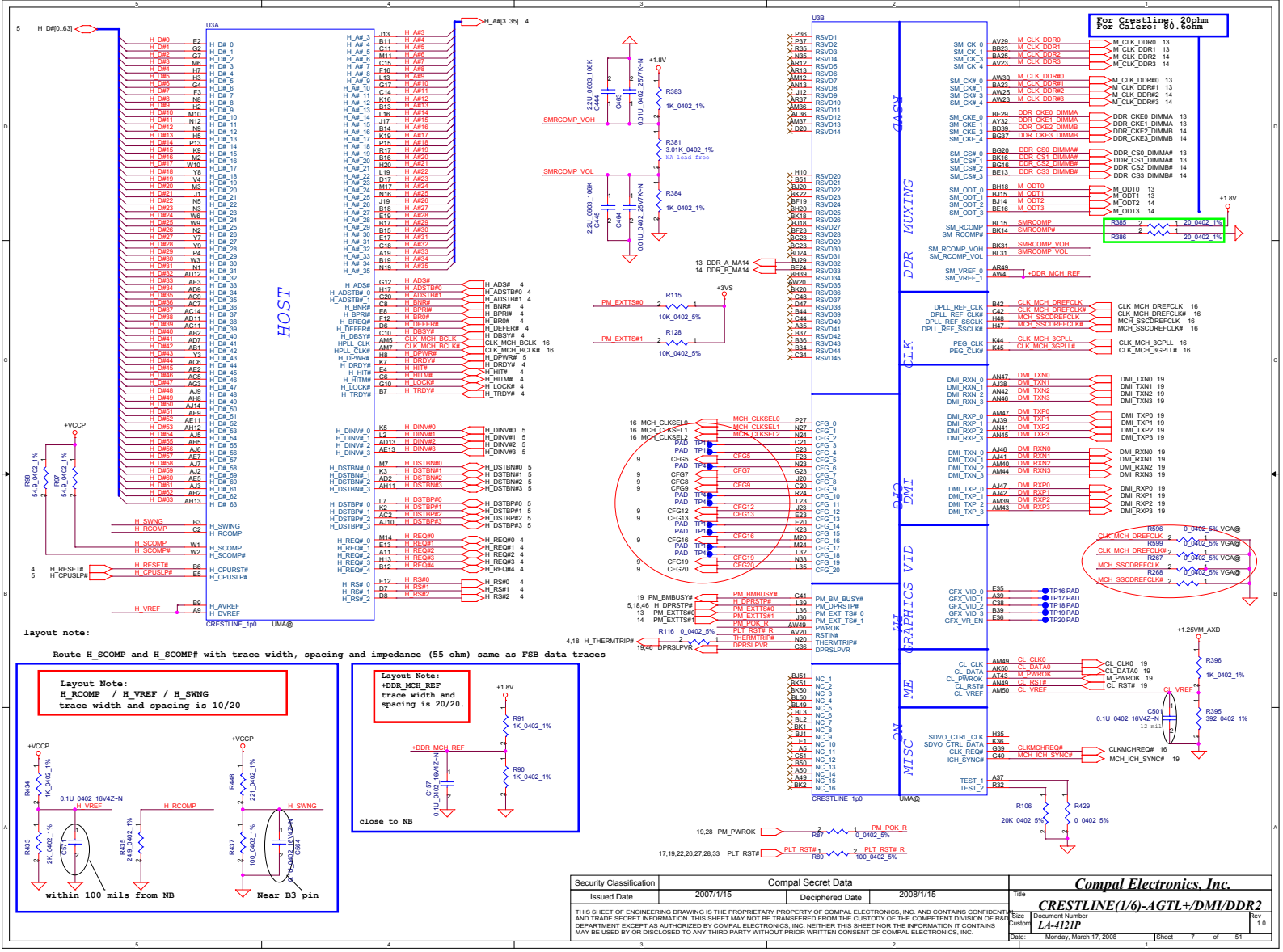

Security Classification	Compal Secret Data		
Issued Date	2007/1/15	Deciphered Date	2008/1/15

THIS SHEET OF ENGINEERING DRAWING IS THE PROPRIETARY PROPERTY OF COMPAL ELECTRONICS, INC. AND CONTAINS CONFIDENTIAL AND TRADE SECRET INFORMATION. THIS SHEET MAY NOT BE TRANSFERED FROM THE CUSTODY OF THE COMPETENT DIVISION OF R&D DEPARTMENT EXCEPT AS AUTHORIZED BY COMPAL ELECTRONICS, INC. NEITHER THIS SHEET NOR THE INFORMATION IT CONTAINS MAY BE USED BY OR DISCLOSED TO ANY THIRD PARTY WITHOUT PRIOR WRITTEN CONSENT OF COMPAL ELECTRONICS, INC.

Compal Electronics, Inc.

Title: **CRESTLINE(1/6)-AGTL+/DMI/DDR2**

Size: Custom | Document Number: LA-4121P | Rev: 1.0

Date: Monday, March 17, 2008 | Sheet 7 of 51

GRATIS - FOR FREE
hexainf@hotmail.com

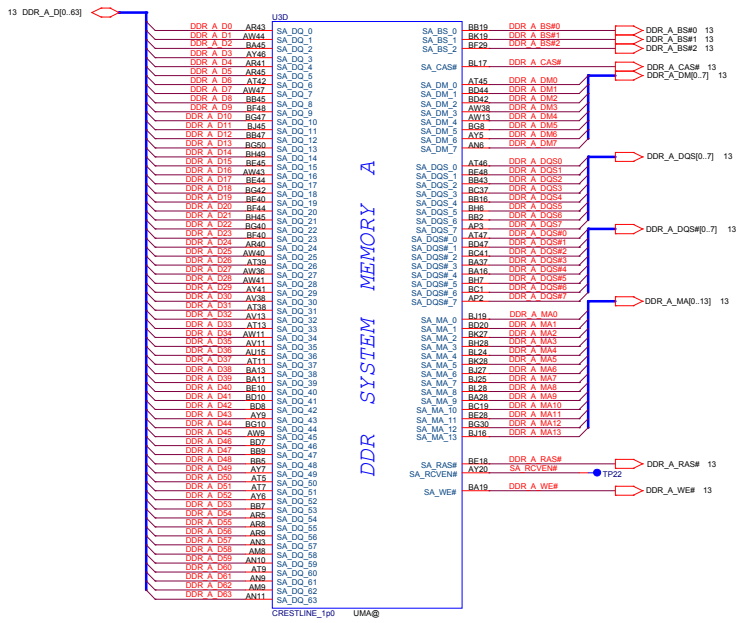

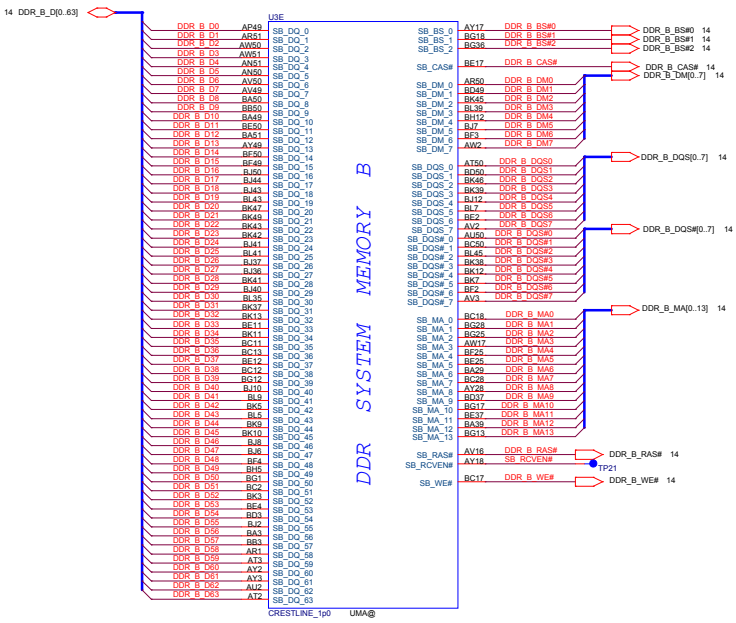

Security Classification	Compal Secret Data		
Issued Date	2007/1/15	Deciphered Date	2008/1/15

THIS SHEET OF ENGINEERING DRAWING IS THE PROPRIETARY PROPERTY OF COMPAL ELECTRONICS, INC. AND CONTAINS CONFIDENTIAL AND TRADE SECRET INFORMATION. THIS SHEET MAY NOT BE TRANSFERED FROM THE CUSTODY OF THE COMPETENT DIVISION OF R&D DEPARTMENT EXCEPT AS AUTHORIZED BY COMPAL ELECTRONICS, INC. NEITHER THIS SHEET NOR THE INFORMATION IT CONTAINS MAY BE USED BY OR DISCLOSED TO ANY THIRD PARTY WITHOUT PRIOR WRITTEN CONSENT OF COMPAL ELECTRONICS, INC.

Compal Electronics, Inc.

Title: **CRESTLINE(2/6)-DDR2 A/B CH**

Size: Custom | Document Number: LA-4121P | Rev: 1.0

Date: Monday, March 17, 2008 | Sheet 8 of 51

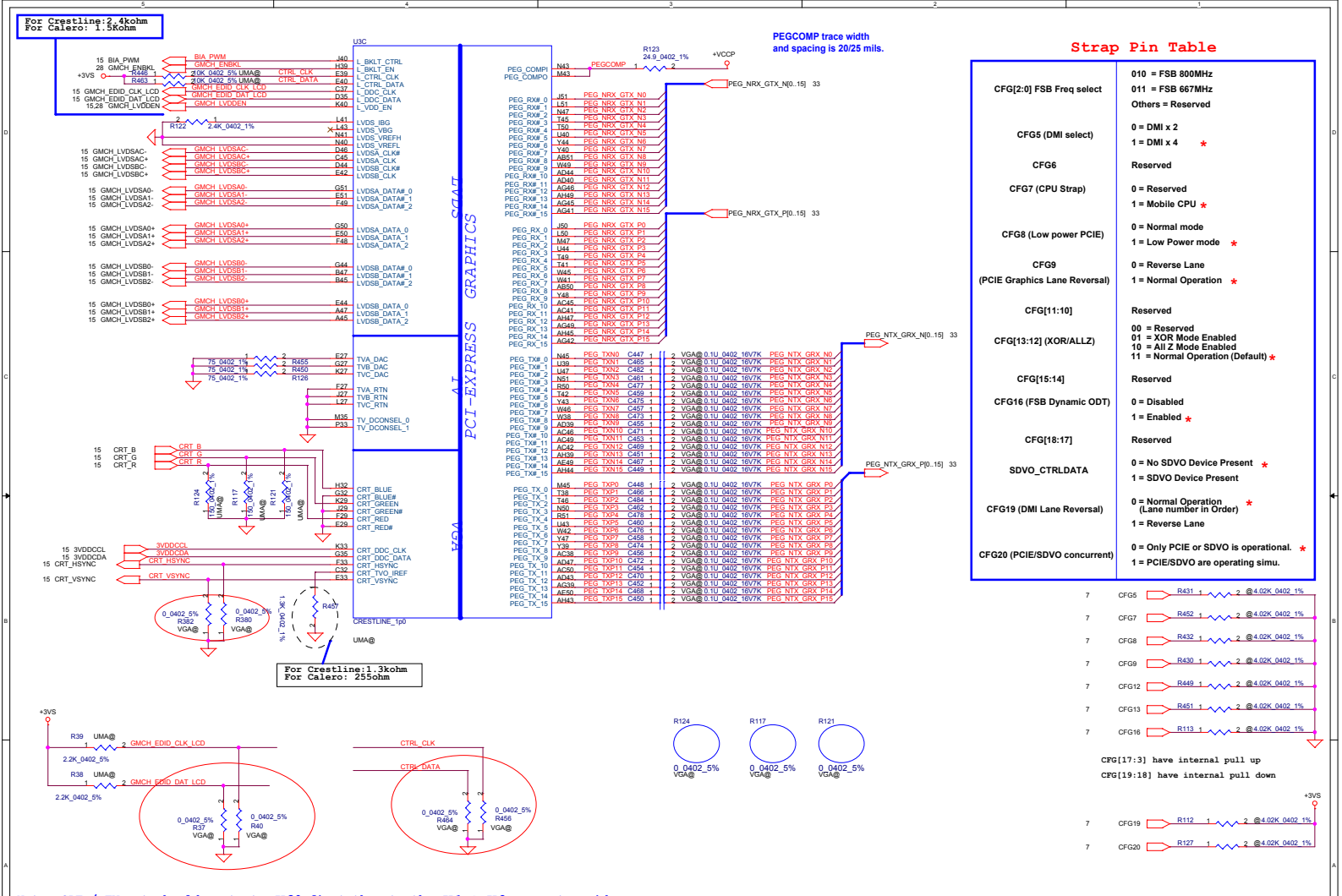

Strap Pin Table

CFG[2:0] FSB Freq select	010 = FSB 800MHz 011 = FSB 667MHz Others = Reserved
CFG5 (DMI select)	0 = DMI x 2 1 = DMI x 4 *
CFG6	Reserved
CFG7 (CPU Strap)	0 = Reserved 1 = Mobile CPU *
CFG8 (Low power PCIE)	0 = Normal mode 1 = Low Power mode *
CFG9 (PCIE Graphics Lane Reversal)	0 = Reverse Lane 1 = Normal Operation *
CFG[11:10]	Reserved
CFG[13:12] (XOR/ALLZ)	00 = Reserved 01 = XOR Mode Enabled 10 = All Z Mode Enabled 11 = Normal Operation (Default) *
CFG[15:14]	Reserved
CFG16 (FSB Dynamic ODT)	0 = Disabled 1 = Enabled *
CFG[18:17]	Reserved
SDVO_CTRLDATA	0 = No SDVO Device Present * 1 = SDVO Device Present
CFG19 (DMI Lane Reversal)	0 = Normal Operation (Lane number in Order) * 1 = Reverse Lane
CFG20 (PCIE/SDVO concurrent)	0 = Only PCIE or SDVO is operational. * 1 = PCIE/SDVO are operating simu.

Note: CRT / TV-out should route to JP30 first then to the JP1 & JP2 on system side.

Security Classification	Compal Secret Data		
Issued Date	2007/1/15	Deciphered Date	2008/1/15

THIS SHEET OF ENGINEERING DRAWING IS THE PROPRIETARY PROPERTY OF COMPAL ELECTRONICS, INC. AND CONTAINS CONFIDENTIAL AND TRADE SECRET INFORMATION. THIS SHEET MAY NOT BE TRANSFERED FROM THE CUSTODY OF THE COMPETENT DIVISION OF R&D DEPARTMENT EXCEPT AS AUTHORIZED BY COMPAL ELECTRONICS, INC. NEITHER THIS SHEET NOR THE INFORMATION IT CONTAINS MAY BE USED BY OR DISCLOSED TO ANY THIRD PARTY WITHOUT PRIOR WRITTEN CONSENT OF COMPAL ELECTRONICS, INC.

Compal Electronics, Inc.

Title: CRESTLINE(3/6)-VGA/LVDS/TV

Size: Custom | Document Number: LA-4121P | Rev: 1.0

Date: Monday, March 17, 2008 | Sheet 9 of 51

GRATIS - FOR FREE
hexainf@hotmail.com

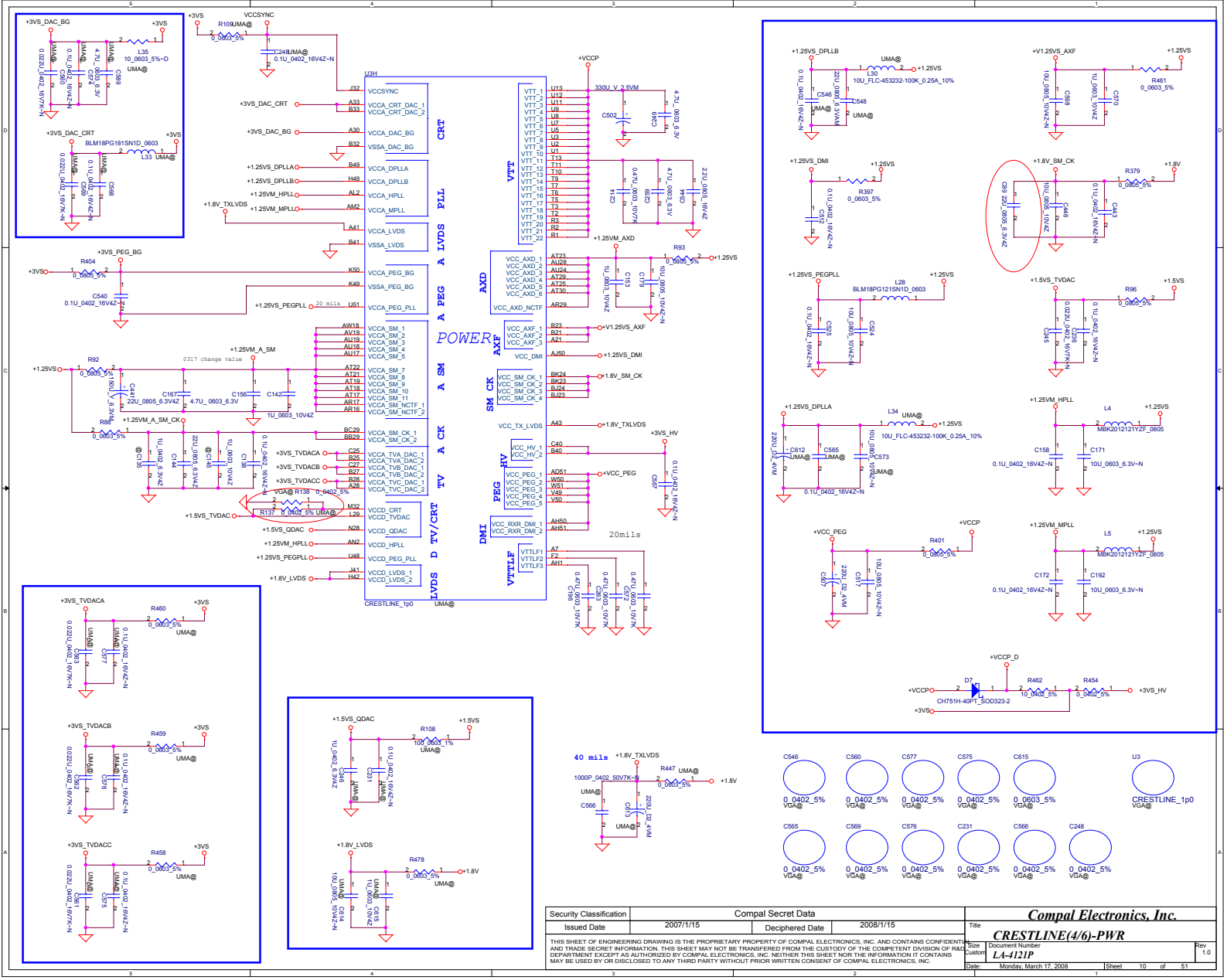

Security Classification	Compal Secret Data		
Issued Date	2007/1/15	Deciphered Date	2008/1/15

THIS SHEET OF ENGINEERING DRAWING IS THE PROPRIETARY PROPERTY OF COMPAL ELECTRONICS, INC. AND CONTAINS CONFIDENTIAL AND TRADE SECRET INFORMATION. THIS SHEET MAY NOT BE TRANSFERED FROM THE CUSTODY OF THE COMPETENT DIVISION OF R&D DEPARTMENT EXCEPT AS AUTHORIZED BY COMPAL ELECTRONICS, INC. NEITHER THIS SHEET NOR THE INFORMATION IT CONTAINS MAY BE USED BY OR DISCLOSED TO ANY THIRD PARTY WITHOUT PRIOR WRITTEN CONSENT OF COMPAL ELECTRONICS, INC.

Compal Electronics, Inc.

Title: **CRESTLINE(4/6)-PWR**

Size: Custom | Document Number: LA-4121P | Rev: 1.0

Date: Monday, March 17, 2008 | Sheet 10 of 51

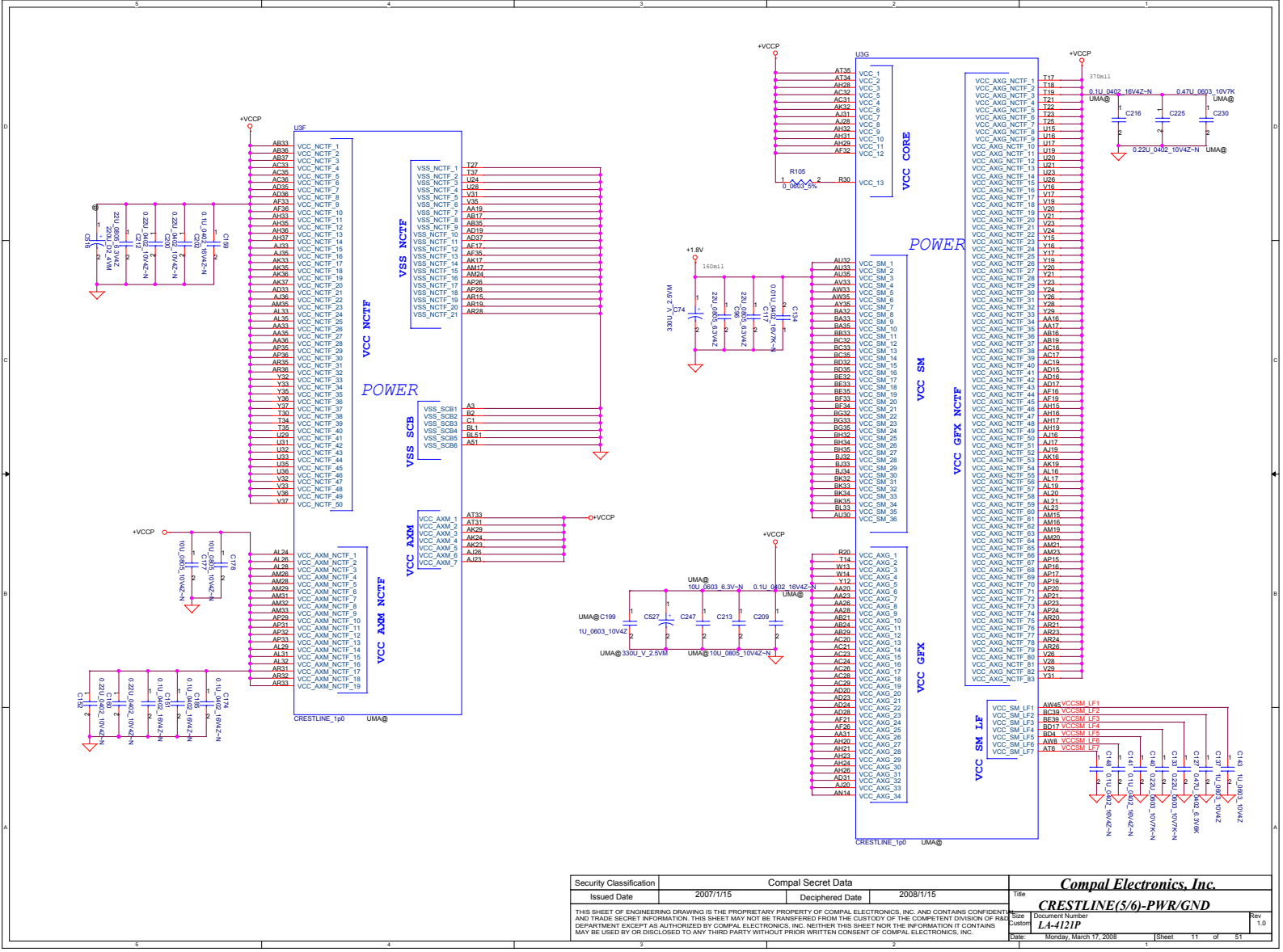

Security Classification	Compal Secret Data		
Issued Date	2007/1/15	Deciphered Date	2008/1/15

THIS SHEET OF ENGINEERING DRAWING IS THE PROPRIETARY PROPERTY OF COMPAL ELECTRONICS, INC. AND CONTAINS CONFIDENTIAL AND TRADE SECRET INFORMATION. THIS SHEET MAY NOT BE TRANSFERED FROM THE CUSTODY OF THE COMPETENT DIVISION OF R&D DEPARTMENT EXCEPT AS AUTHORIZED BY COMPAL ELECTRONICS, INC. NEITHER THIS SHEET NOR THE INFORMATION IT CONTAINS MAY BE USED BY OR DISCLOSED TO ANY THIRD PARTY WITHOUT PRIOR WRITTEN CONSENT OF COMPAL ELECTRONICS, INC.

Compal Electronics, Inc.

Title: CRESTLINE(5/6)-PWR/GND

Size: Custom | Document Number: LA-4121P | Rev: 1.0

Date: Monday, March 17, 2008 | Sheet 11 of 51

GRATIS - FOR FREE
hexainf@hotmail.com

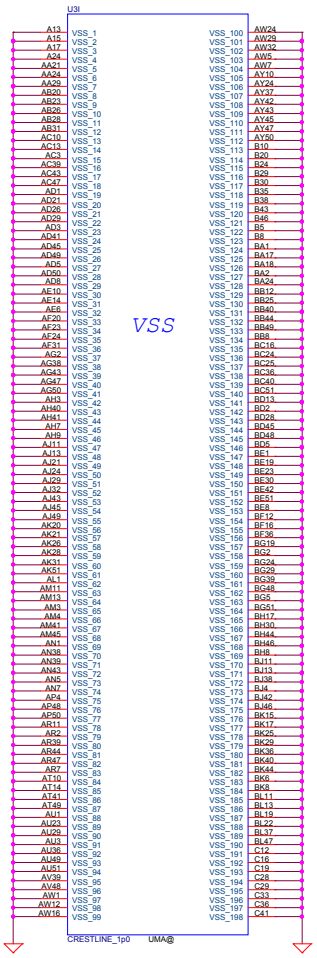

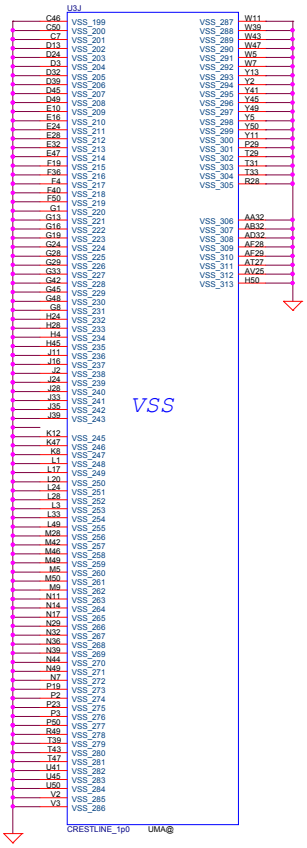

Security Classification	Compal Secret Data		
Issued Date	2007/1/15	Deciphered Date	2008/1/15

THIS SHEET OF ENGINEERING DRAWING IS THE PROPRIETARY PROPERTY OF COMPAL ELECTRONICS, INC. AND CONTAINS CONFIDENTIAL AND TRADE SECRET INFORMATION. THIS SHEET MAY NOT BE TRANSFERED FROM THE CUSTODY OF THE COMPETENT DIVISION OF R&D DEPARTMENT EXCEPT AS AUTHORIZED BY COMPAL ELECTRONICS, INC. NEITHER THIS SHEET NOR THE INFORMATION IT CONTAINS MAY BE USED BY OR DISCLOSED TO ANY THIRD PARTY WITHOUT PRIOR WRITTEN CONSENT OF COMPAL ELECTRONICS, INC.

Compal Electronics, Inc.

Title: **CRESTLINE(6/6)-PWR/GND**

Size: Custom | Document Number: LA-4121P | Rev: 1.0

Date: Monday, March 17, 2008 | Sheet 12 of 51

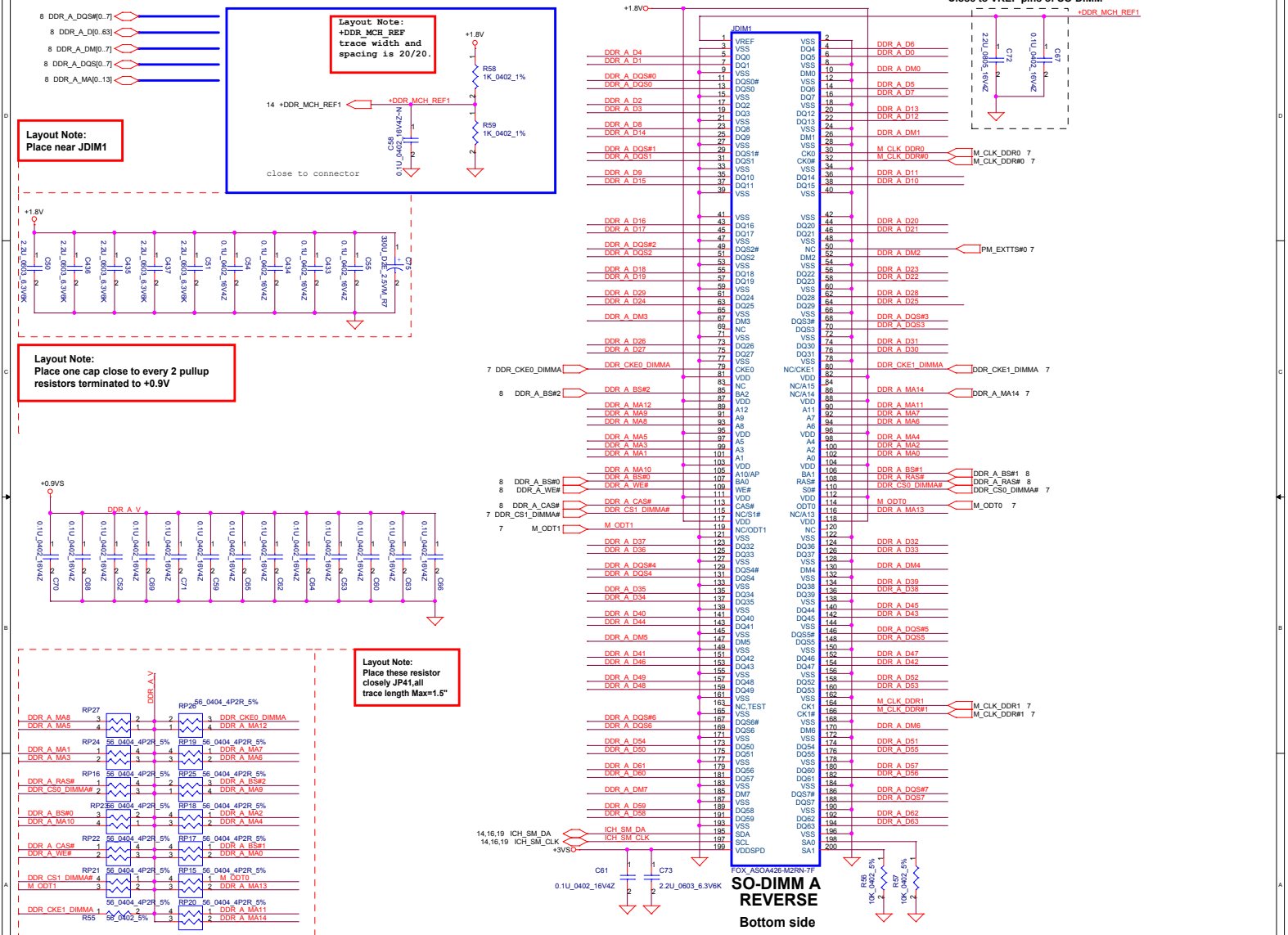

Security Classification	Compal Secret Data		
Issued Date	2007/1/15	Deciphered Date	2008/1/15

THIS SHEET OF ENGINEERING DRAWING IS THE PROPRIETARY PROPERTY OF COMPAL ELECTRONICS, INC. AND CONTAINS CONFIDENTIAL AND TRADE SECRET INFORMATION. THIS SHEET MAY NOT BE TRANSFERED FROM THE CUSTODY OF THE COMPETENT DIVISION OF R&D DEPARTMENT EXCEPT AS AUTHORIZED BY COMPAL ELECTRONICS, INC. NEITHER THIS SHEET NOR THE INFORMATION IT CONTAINS MAY BE USED BY OR DISCLOSED TO ANY THIRD PARTY WITHOUT PRIOR WRITTEN CONSENT OF COMPAL ELECTRONICS, INC.

Compal Electronics, Inc.

Title: DDR2 SO-DIMM I

Size: Custom | Document Number: LA-4121P | Rev: 1.0

Date: Monday, March 17, 2008 | Sheet 13 of 51

GRATIS - FOR FREE
hexainf@hotmail.com

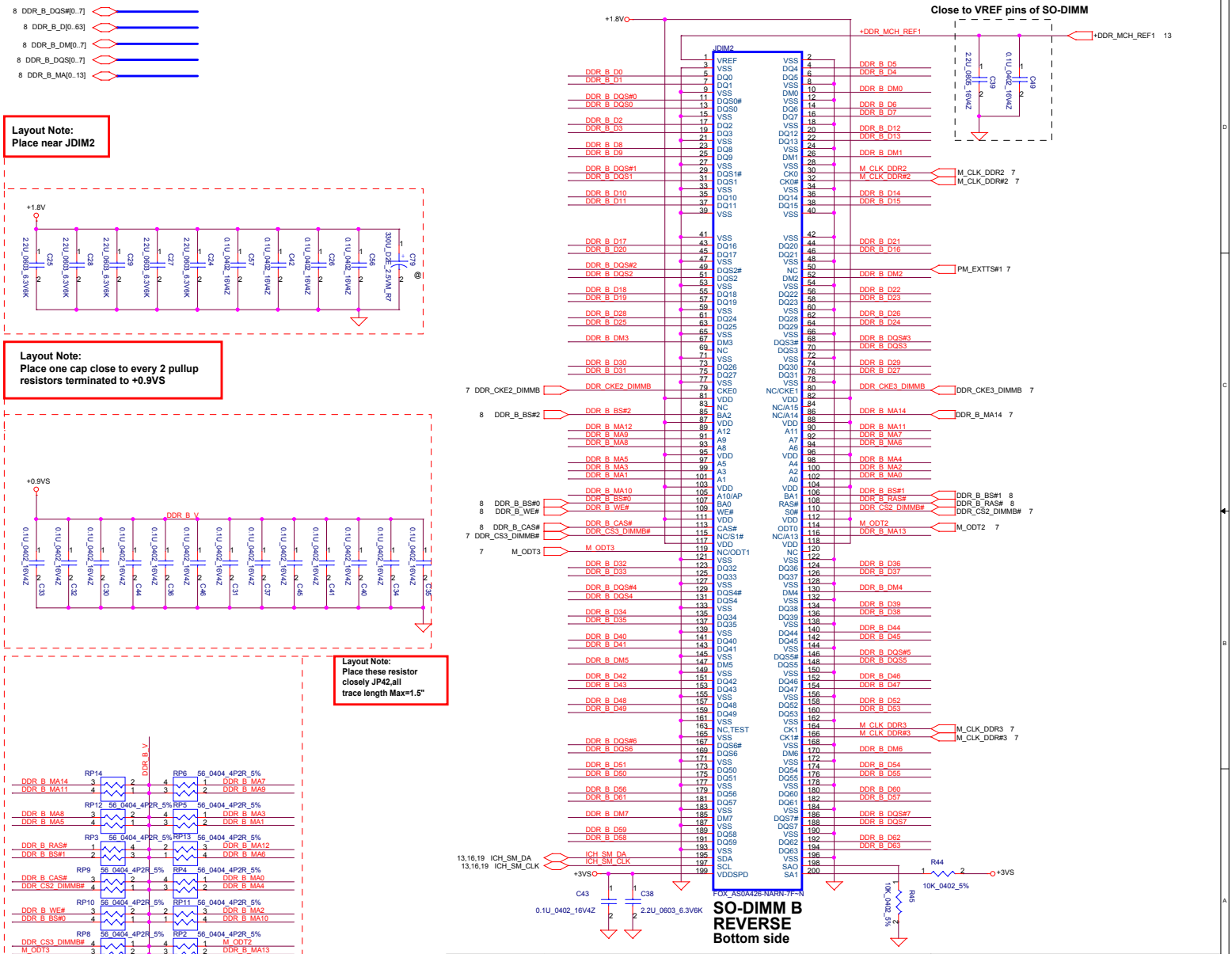

Security Classification	Compal Secret Data		
Issued Date	2007/1/15	Deciphered Date	2008/1/15

THIS SHEET OF ENGINEERING DRAWING IS THE PROPRIETARY PROPERTY OF COMPAL ELECTRONICS, INC. AND CONTAINS CONFIDENTIAL AND TRADE SECRET INFORMATION. THIS SHEET MAY NOT BE TRANSFERED FROM THE CUSTODY OF THE COMPETENT DIVISION OF R&D DEPARTMENT EXCEPT AS AUTHORIZED BY COMPAL ELECTRONICS, INC. NEITHER THIS SHEET NOR THE INFORMATION IT CONTAINS MAY BE USED BY OR DISCLOSED TO ANY THIRD PARTY WITHOUT PRIOR WRITTEN CONSENT OF COMPAL ELECTRONICS, INC.

Compal Electronics, Inc.

Title: **DDR2 SO-DIMM II**

Size	Document Number	Rev
Custom	LA-4121P	1.0

Date: Monday, March 17, 2008 | Sheet 14 of 51

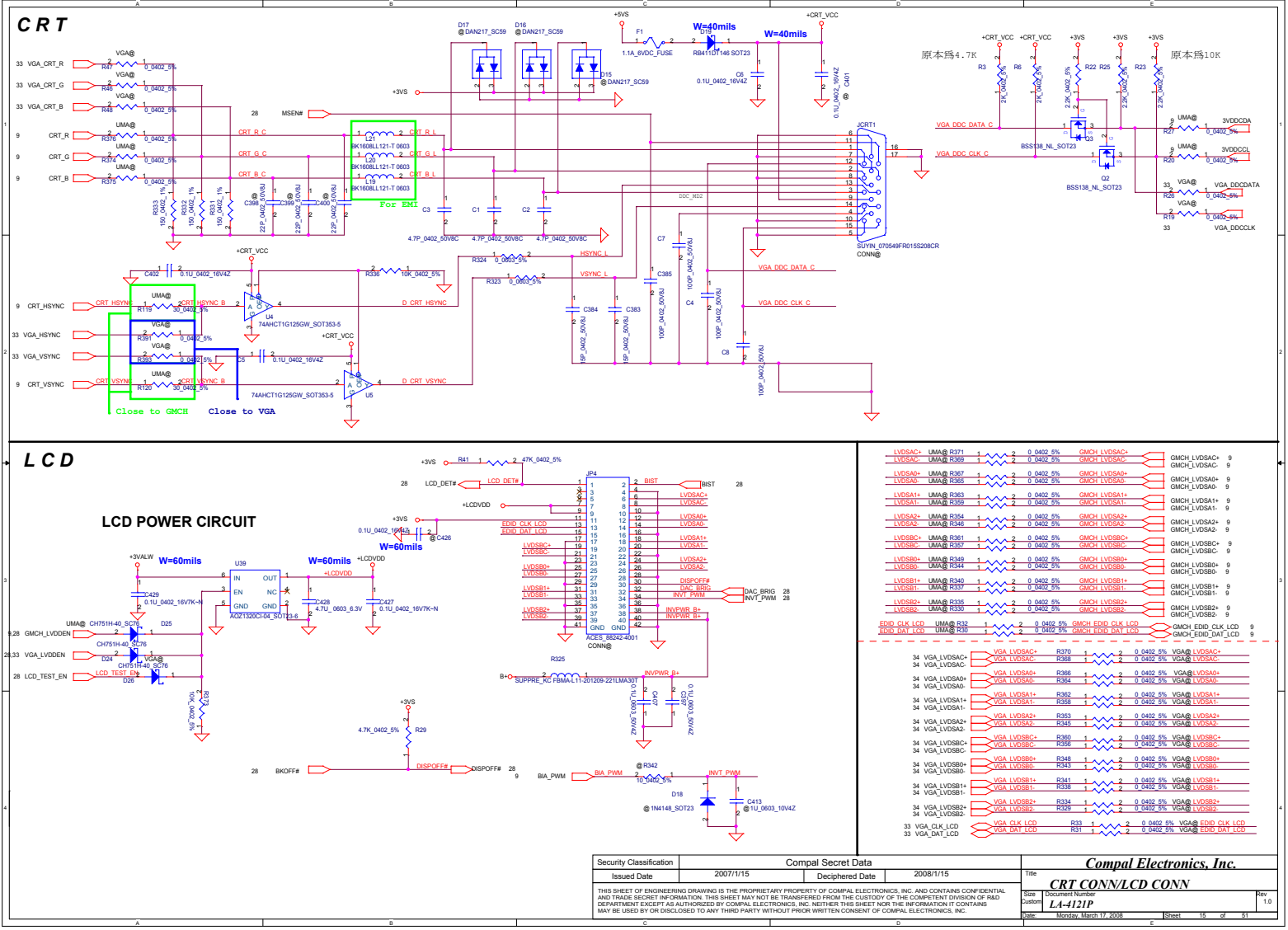

GRATIS - FOR FREE
hexainf@hotmail.com

FSLC CLKSEL2	FSLB CLKSEL1	FSLA CLKSEL0	CPU MHz	SRC MHz	PCI MHz
0	1	0	200	100	33.3
0	1	1	166	100	33.3

FSB Frequency Selet:

CPU Driven	Stuff	R1107	R1135	R1083			
★(Default)	No Stuff	R1074	R1086	R1098	R1113	R1128	R1139
667MHz	Stuff	R1086	R1139	R1135	R1074	R1139	R1135
	No Stuff	R1083	R1107	R1128			
		R1113	R1098				
800MHz	Stuff	R1135	R1139				
	No Stuff	R1083	R1086	R1098	R1128		
		R1074	R1107	R1113			

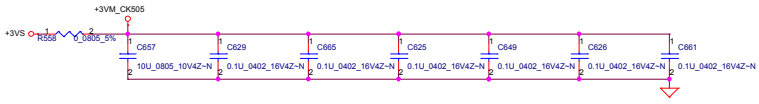

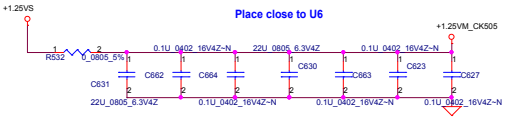

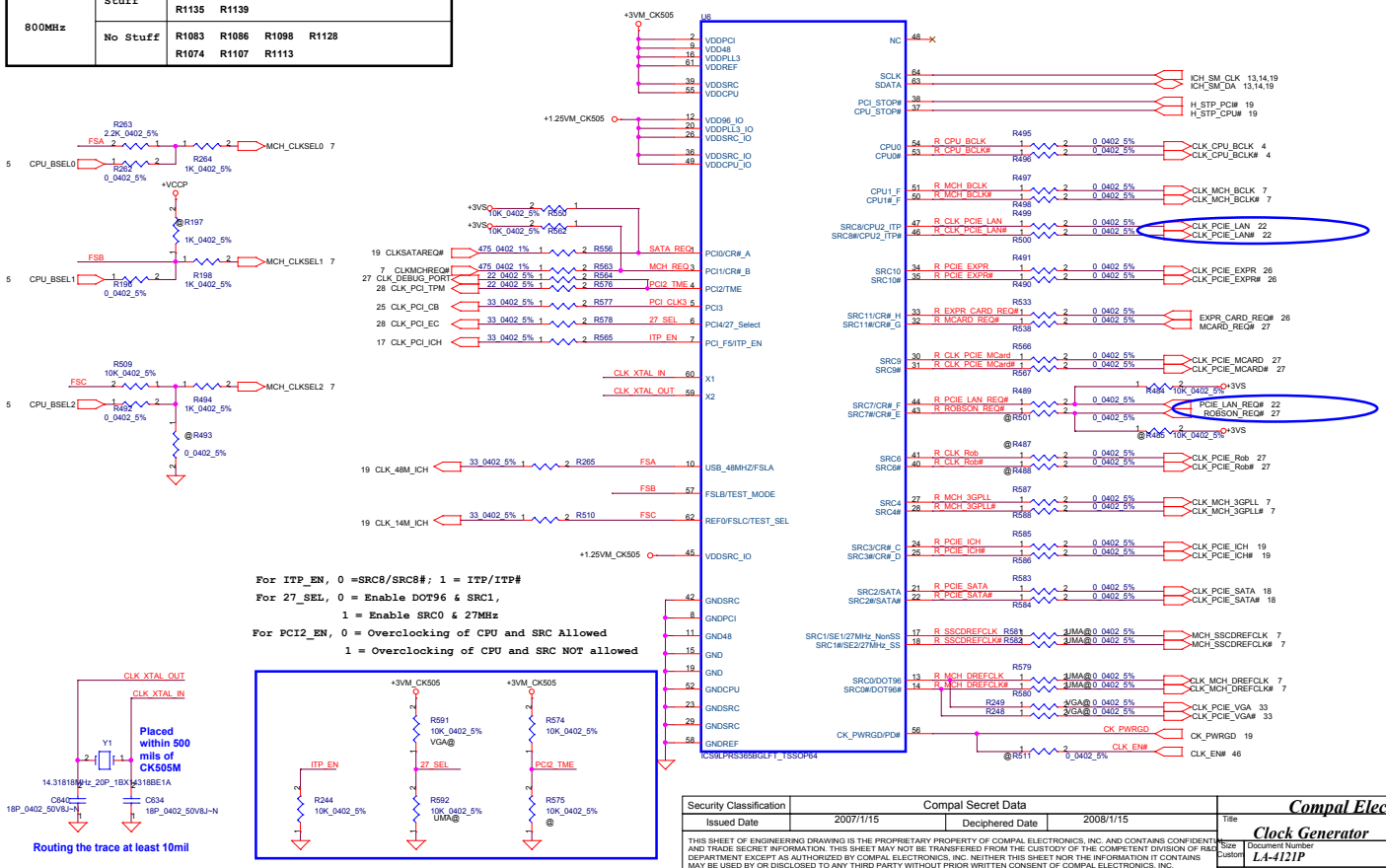

For ITP_EN, 0 =SRC8/SRC8#; 1 = ITP/ITP#
For 27_SEL, 0 = Enable DOT96 & SRC1,
1 = Enable SRC0 & 27MHz
For PCI2_EN, 0 = Overclocking of CPU and SRC Allowed
1 = Overclocking of CPU and SRC NOT allowed

Security Classification	Compal Secret Data		
Issued Date	2007/1/15	Deciphered Date	2008/1/15

THIS SHEET OF ENGINEERING DRAWING IS THE PROPRIETARY PROPERTY OF COMPAL ELECTRONICS, INC. AND CONTAINS CONFIDENTIAL AND TRADE SECRET INFORMATION. THIS SHEET MAY NOT BE TRANSFERED FROM THE CUSTODY OF THE COMPETENT DIVISION OF R&D DEPARTMENT EXCEPT AS AUTHORIZED BY COMPAL ELECTRONICS, INC. NEITHER THIS SHEET NOR THE INFORMATION IT CONTAINS MAY BE USED BY OR DISCLOSED TO ANY THIRD PARTY WITHOUT PRIOR WRITTEN CONSENT OF COMPAL ELECTRONICS, INC.

Compal Electronics, Inc.

Title: Clock Generator

Size: Custom | Document Number: LA-4121P | Rev: 1.0

Date: Monday, March 17, 2008 | Sheet 16 of 51

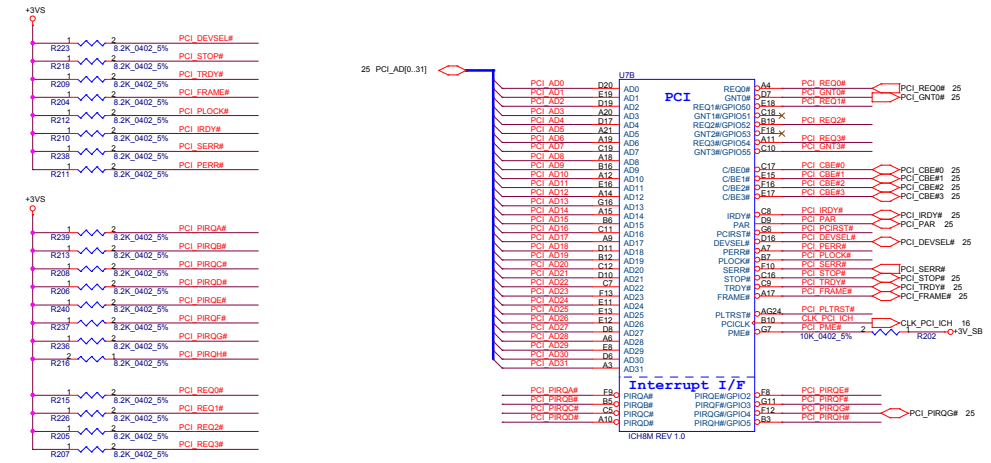

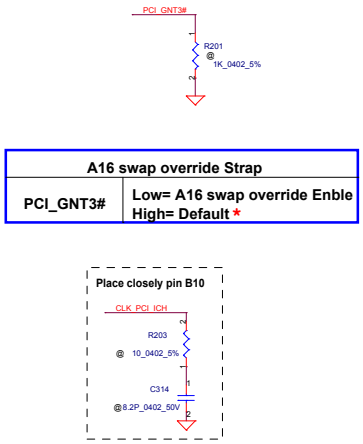

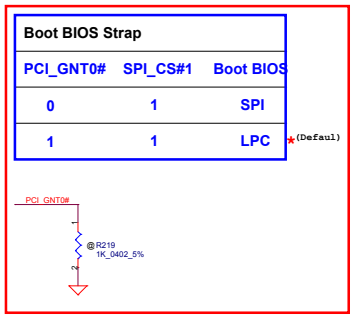

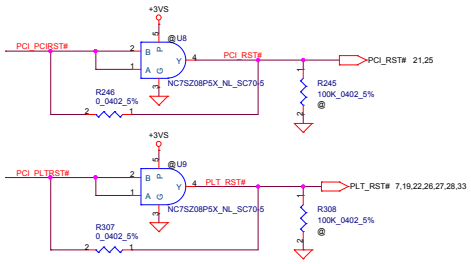

Security Classification	Compal Secret Data		
Issued Date	2007/1/15	Deciphered Date	2008/1/15

Compal Electronics, Inc.

Title: ICH8(1/4)-PCI/INT

Size: Custom | Document Number: LA-4121P | Rev: 1.0

Date: Monday, March 17, 2008 | Sheet 17 of 51

THIS SHEET OF ENGINEERING DRAWING IS THE PROPRIETARY PROPERTY OF COMPAL ELECTRONICS, INC. AND CONTAINS CONFIDENTIAL AND TRADE SECRET INFORMATION. THIS SHEET MAY NOT BE TRANSFERED FROM THE CUSTODY OF THE COMPETENT DIVISION OF R&D DEPARTMENT EXCEPT AS AUTHORIZED BY COMPAL ELECTRONICS, INC. NEITHER THIS SHEET NOR THE INFORMATION IT CONTAINS MAY BE USED BY OR DISCLOSED TO ANY THIRD PARTY WITHOUT PRIOR WRITTEN CONSENT OF COMPAL ELECTRONICS, INC.

DELL CONI

THIS SHEET OF ENGINEERING DRAWING IS THE PROPRIETARY PROPERTY OF COMPAL ELECTRONICS, INC. AND CONTAINS CONFIDENTIAL AND TRADE SECRET INFORMATION. THIS SHEET MAY NOT BE TRANSFERED FROM THE CUSTODY OF THE COMPETENT DIVISION OF R&D DEPARTMENT EXCEPT AS AUTHORIZED BY COMPAL ELECTRONICS, INC. NEITHER THIS SHEET NOR THE INFORMATION IT CONTAINS MAY BE USED BY OR DISCLOSED TO ANY THIRD PARTY WITHOUT PRIOR WRITTEN CONSENT OF COMPAL ELECTRONICS, INC.

GRATIS - FOR FREE
hexainf@hotmail.com

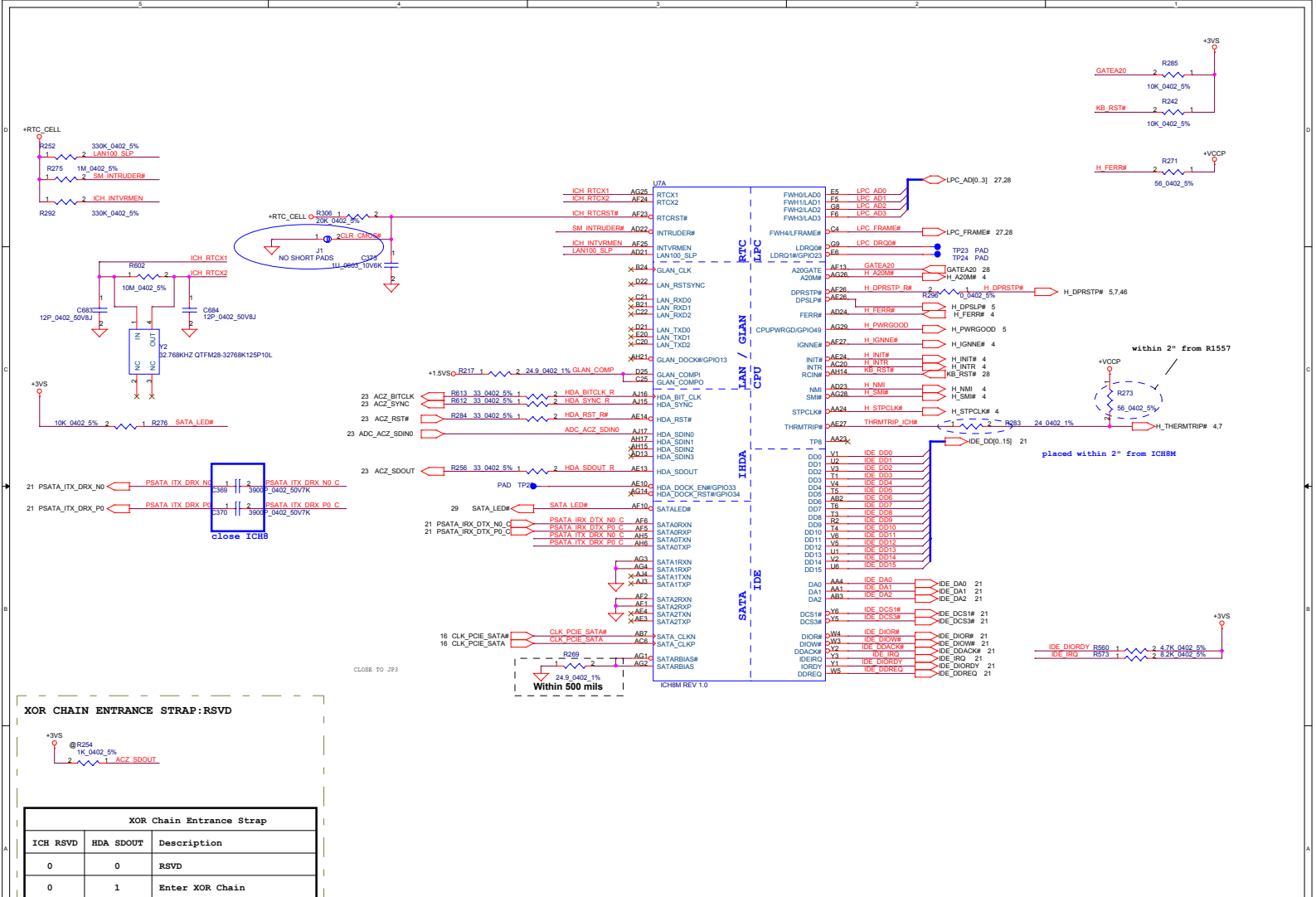

XOR CHAIN ENTRANCE STRAP:RSVD

XOR Chain Entrance Strap		
ICH RSVD	HDA SDOUT	Description
0	0	RSVD
0	1	Enter XOR Chain
1	0	Normal Operation (Default)
1	1	Set PCIE port config bit 1

Security Classification	Compal Secret Data		
Issued Date	2007/1/15	Deciphered Date	2008/1/15

THIS SHEET OF ENGINEERING DRAWING IS THE PROPRIETARY PROPERTY OF COMPAL ELECTRONICS, INC. AND CONTAINS CONFIDENTIAL AND TRADE SECRET INFORMATION. THIS SHEET MAY NOT BE TRANSFERED FROM THE CUSTODY OF THE COMPETENT DIVISION OF R&D DEPARTMENT EXCEPT AS AUTHORIZED BY COMPAL ELECTRONICS, INC. NEITHER THIS SHEET NOR THE INFORMATION IT CONTAINS MAY BE USED BY OR DISCLOSED TO ANY THIRD PARTY WITHOUT PRIOR WRITTEN CONSENT OF COMPAL ELECTRONICS, INC.

Compal Electronics, Inc.

Title: ICH8(2/4)-LAN,HD,IDE,LPC

Size: Custom | Document Number: LA-4121P | Rev: 1.0

Date: Monday, March 17, 2008 | Sheet 18 of 51

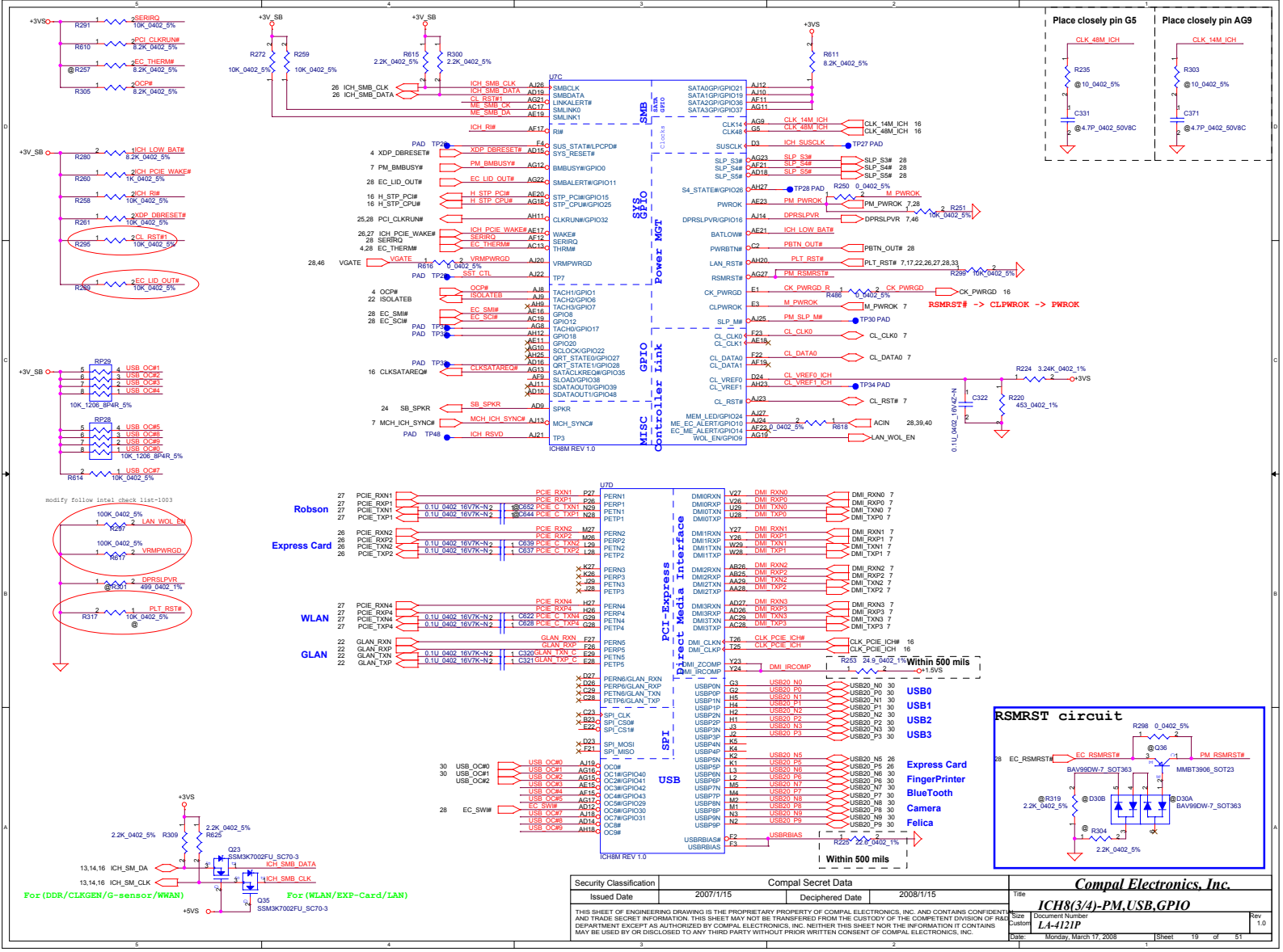

Security Classification	Compal Secret Data		
Issued Date	2007/1/15	Deciphered Date	2008/1/15

THIS SHEET OF ENGINEERING DRAWING IS THE PROPRIETARY PROPERTY OF COMPAL ELECTRONICS, INC. AND CONTAINS CONFIDENTIAL AND TRADE SECRET INFORMATION. THIS SHEET MAY NOT BE TRANSFERED FROM THE CUSTODY OF THE COMPETENT DIVISION OF R&D DEPARTMENT EXCEPT AS AUTHORIZED BY COMPAL ELECTRONICS, INC. NEITHER THIS SHEET NOR THE INFORMATION IT CONTAINS MAY BE USED BY OR DISCLOSED TO ANY THIRD PARTY WITHOUT PRIOR WRITTEN CONSENT OF COMPAL ELECTRONICS, INC.

Compal Electronics, Inc.

Title: ICH8(3/4)-PM,USB,GPIO

Size: Custom | Document Number: LA-4121P | Rev: 1.0

Date: Monday, March 17, 2008 | Sheet 19 of 51

GRATIS - FOR FREE
hexainf@hotmail.com

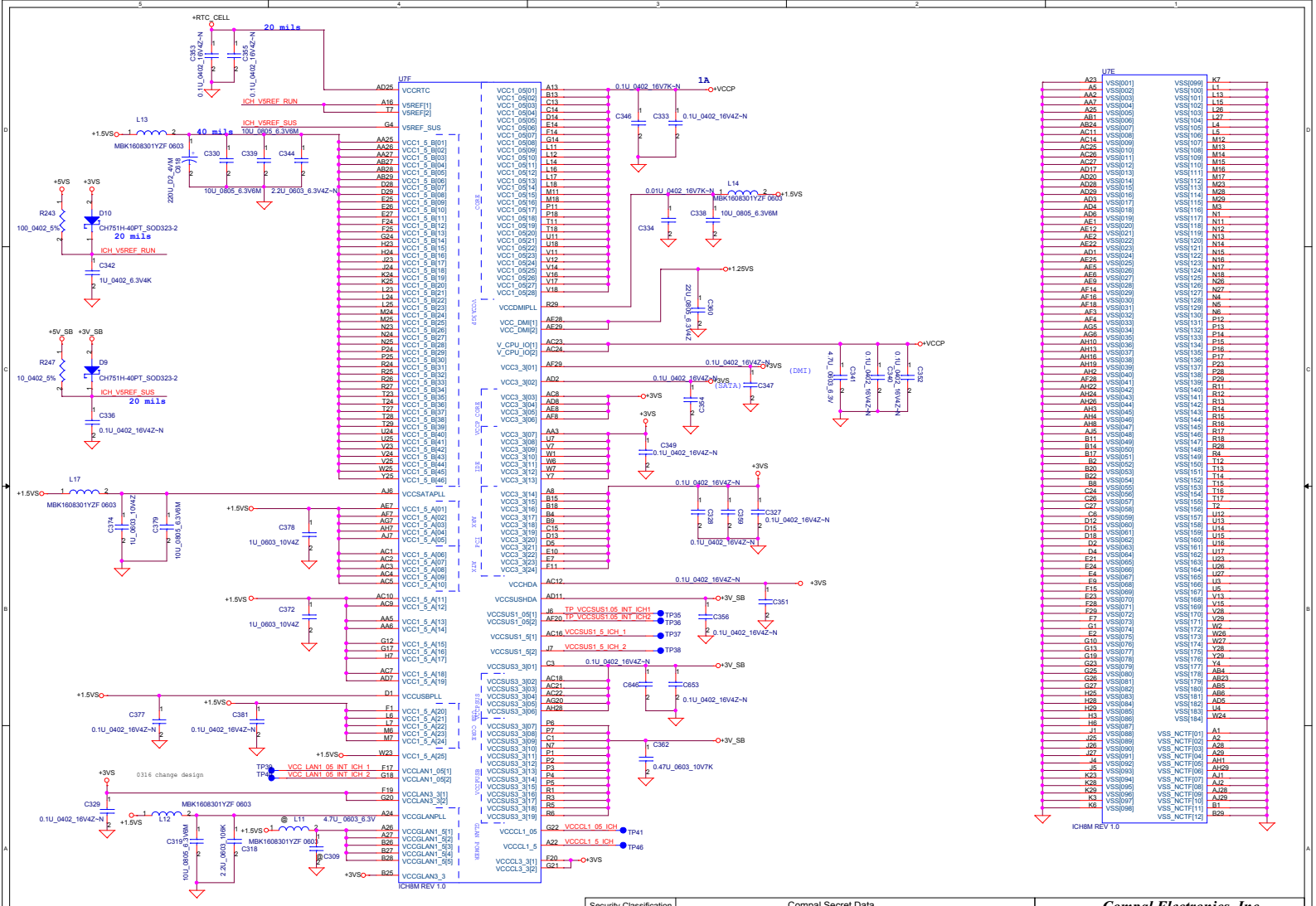

Security Classification	Compal Secret Data		
Issued Date	2007/1/15	Deciphered Date	2008/1/15

THIS SHEET OF ENGINEERING DRAWING IS THE PROPRIETARY PROPERTY OF COMPAL ELECTRONICS, INC. AND CONTAINS CONFIDENTIAL AND TRADE SECRET INFORMATION. THIS SHEET MAY NOT BE TRANSFERED FROM THE CUSTODY OF THE COMPETENT DIVISION OF R&D DEPARTMENT EXCEPT AS AUTHORIZED BY COMPAL ELECTRONICS, INC. NEITHER THIS SHEET NOR THE INFORMATION IT CONTAINS MAY BE USED BY OR DISCLOSED TO ANY THIRD PARTY WITHOUT PRIOR WRITTEN CONSENT OF COMPAL ELECTRONICS, INC.

Compal Electronics, Inc.

Title: **ICH8(4/4)-POWER&GND**

Size: Custom | Document Number: LA-4121P | Rev: 1.0

Date: Monday, March 17, 2008 | Sheet 20 of 51

CDROM CONN

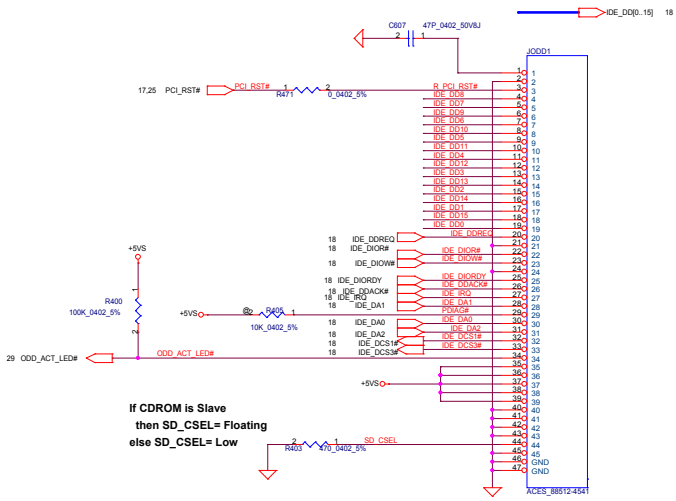

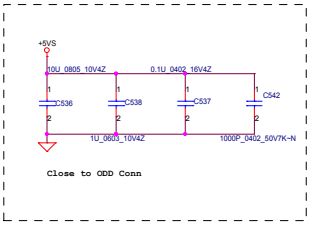

SATA HDD CONN

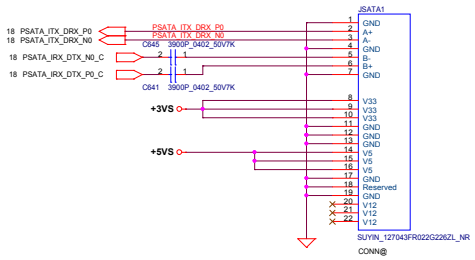

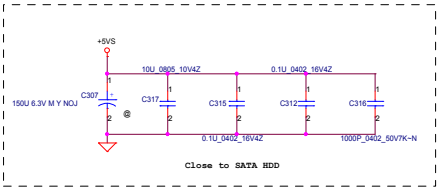

then SD_CSEL= Floating
else SD_CSEL= Low

Security Classification	Compal Secret Data		
Issued Date	2007/1/15	Deciphered Date	2008/1/15

THIS SHEET OF ENGINEERING DRAWING IS THE PROPRIETARY PROPERTY OF COMPAL ELECTRONICS, INC. AND CONTAINS CONFIDENTIAL AND TRADE SECRET INFORMATION. THIS SHEET MAY NOT BE TRANSFERED FROM THE CUSTODY OF THE COMPETENT DIVISION OF R&D DEPARTMENT EXCEPT AS AUTHORIZED BY COMPAL ELECTRONICS, INC. NEITHER THIS SHEET NOR THE INFORMATION IT CONTAINS MAY BE USED BY OR DISCLOSED TO ANY THIRD PARTY WITHOUT PRIOR WRITTEN CONSENT OF COMPAL ELECTRONICS, INC.

Compal Electronics, Inc.

Title: **HDD/CDROM**

Size: Custom | Document Number: LA-4121P | Rev: 1.0

Date: Monday, March 17, 2008 | Sheet 21 of 51

GRATIS - FOR FREE
hexainf@hotmail.com

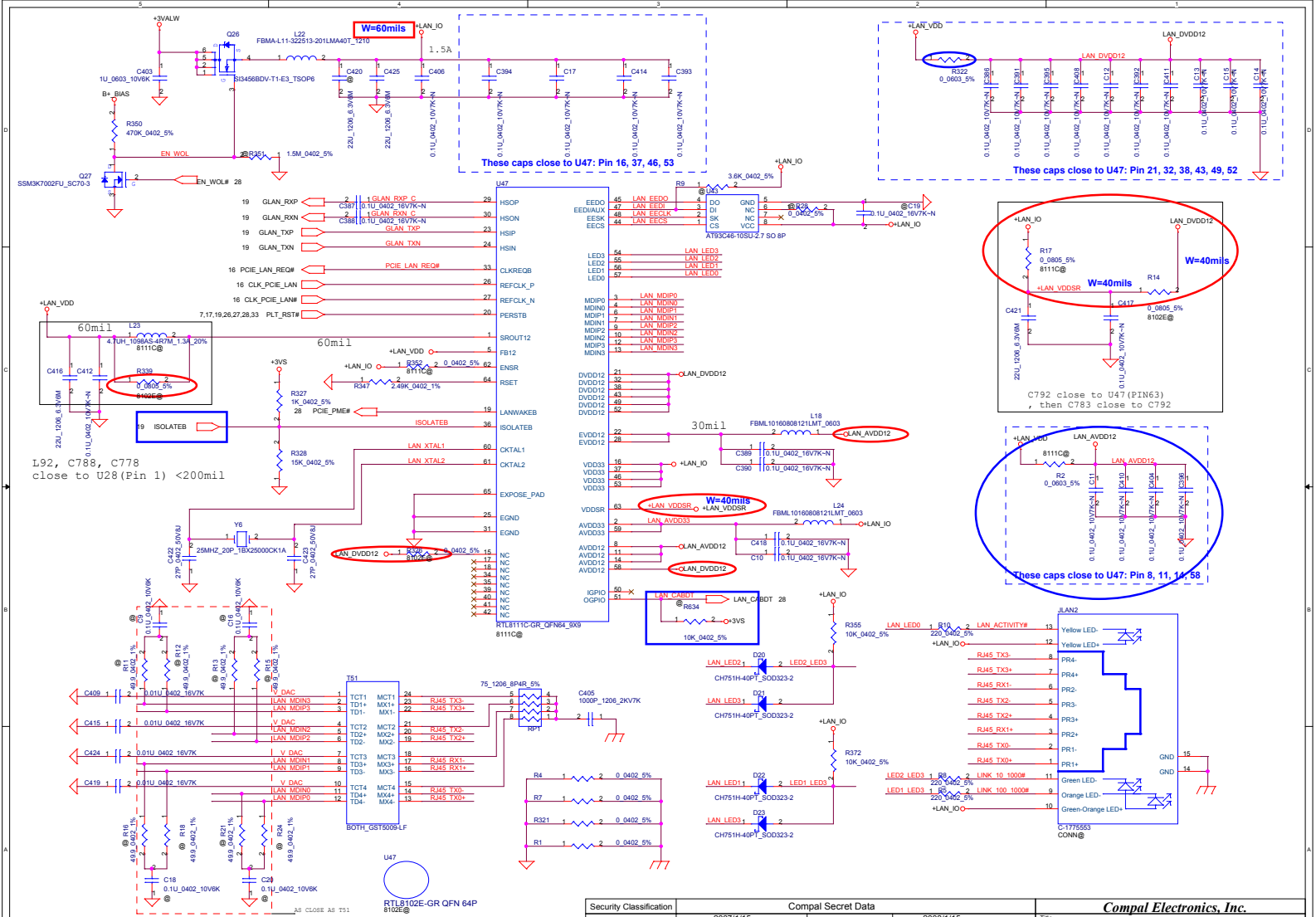

Security Classification	Compal Secret Data		
Issued Date	2007/1/15	Deciphered Date	2008/1/15

THIS SHEET OF ENGINEERING DRAWING IS THE PROPRIETARY PROPERTY OF COMPAL ELECTRONICS, INC. AND CONTAINS CONFIDENTIAL AND TRADE SECRET INFORMATION. THIS SHEET MAY NOT BE TRANSFERED FROM THE CUSTODY OF THE COMPETENT DIVISION OF R&D DEPARTMENT EXCEPT AS AUTHORIZED BY COMPAL ELECTRONICS, INC. NEITHER THIS SHEET NOR THE INFORMATION IT CONTAINS MAY BE USED BY OR DISCLOSED TO ANY THIRD PARTY WITHOUT PRIOR WRITTEN CONSENT OF COMPAL ELECTRONICS, INC.

Compal Electronics, Inc.

Title: **Broadcom BCM5787M**

Size: Custom | Document Number: LA-4121P | Rev: 1.0

Date: Monday, March 17, 2008 | Sheet 22 of 51

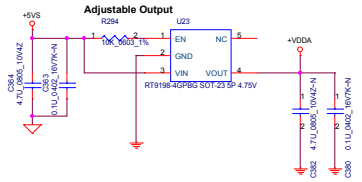

HD Audio Codec

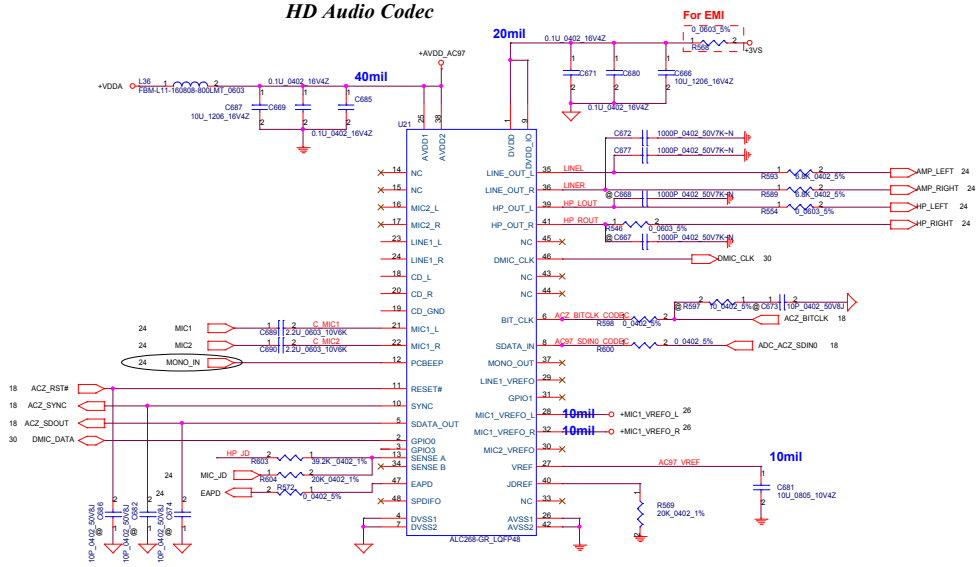

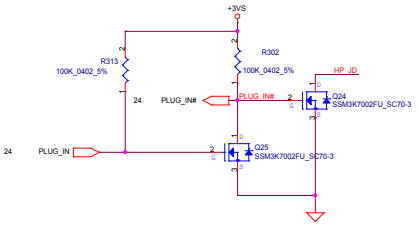

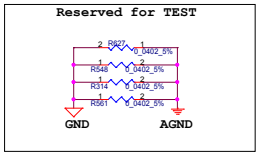

Security Classification	Compal Secret Data		
Issued Date	2007/1/15	Deciphered Date	2008/1/15

THIS SHEET OF ENGINEERING DRAWING IS THE PROPRIETARY PROPERTY OF COMPAL ELECTRONICS, INC. AND CONTAINS CONFIDENTIAL AND TRADE SECRET INFORMATION. THIS SHEET MAY NOT BE TRANSFERED FROM THE CUSTODY OF THE COMPETENT DIVISION OF R&D DEPARTMENT EXCEPT AS AUTHORIZED BY COMPAL ELECTRONICS, INC. NEITHER THIS SHEET NOR THE INFORMATION IT CONTAINS MAY BE USED BY OR DISCLOSED TO ANY THIRD PARTY WITHOUT PRIOR WRITTEN CONSENT OF COMPAL ELECTRONICS, INC.

Compal Electronics, Inc.

Title: Codec ALC268

Size: Custom | Document Number: LA-4121P | Rev: 1.0

Date: Monday, March 17, 2008 | Sheet 23 of 51

GRATIS - FOR FREE
hexainf@hotmail.com

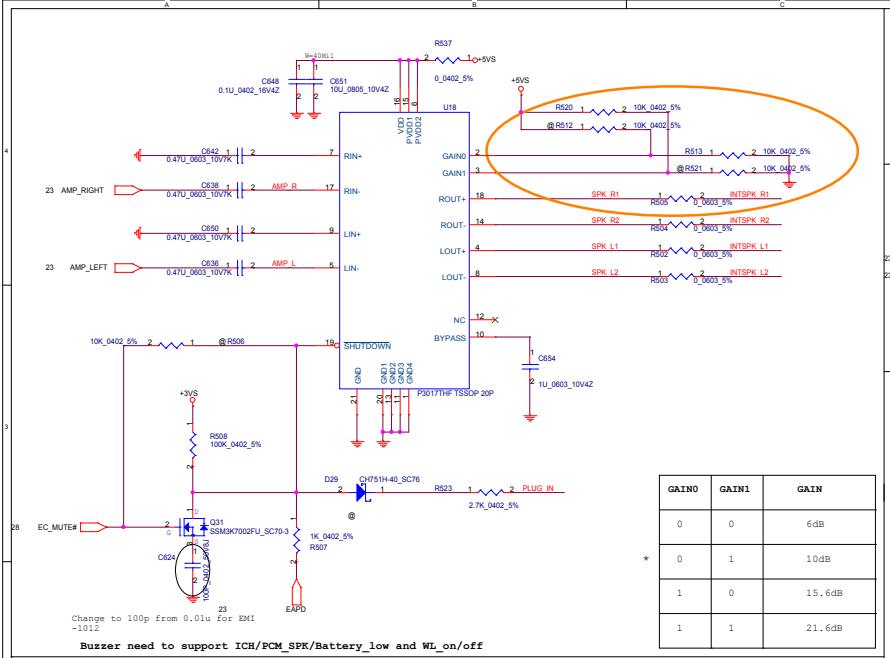

GAIN0	GAIN1	GAIN
0	0	6dB
0	1	10dB
1	0	15.6dB
1	1	21.6dB

*

Buzzer need to support ICH/PCM_SPK/Battery_low and WL_on/off

Speaker Connector

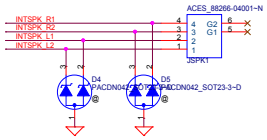

MICROPHONE IN JACK

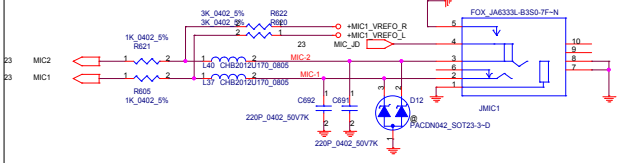

HEADPHONE OUT JACK

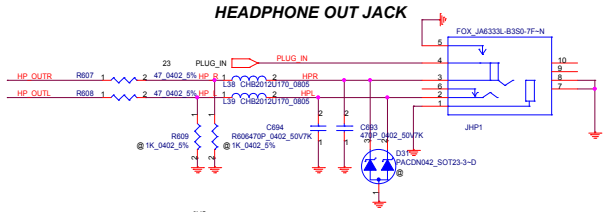

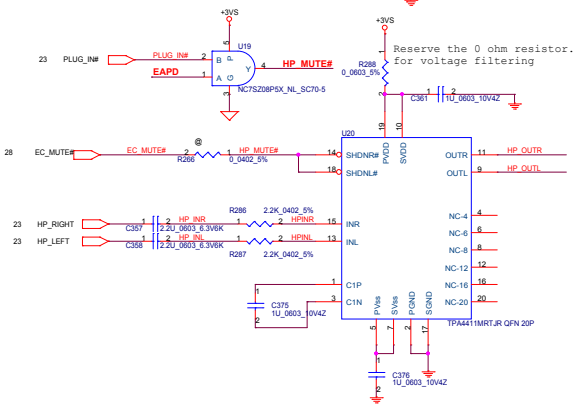

EC Beep

ICH Beep

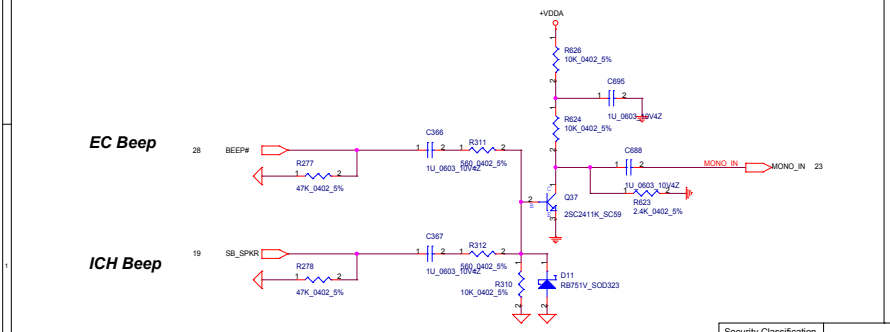

Security Classification	Compal Secret Data		
Issued Date	2007/1/15	Deciphered Date	2008/1/15

THIS SHEET OF ENGINEERING DRAWING IS THE PROPRIETARY PROPERTY OF COMPAL ELECTRONICS, INC. AND CONTAINS CONFIDENTIAL AND TRADE SECRET INFORMATION. THIS SHEET MAY NOT BE TRANSFERED FROM THE CUSTODY OF THE COMPETENT DIVISION OF R&D DEPARTMENT EXCEPT AS AUTHORIZED BY COMPAL ELECTRONICS, INC. NEITHER THIS SHEET NOR THE INFORMATION IT CONTAINS MAY BE USED BY OR DISCLOSED TO ANY THIRD PARTY WITHOUT PRIOR WRITTEN CONSENT OF COMPAL ELECTRONICS, INC.

Compal Electronics, Inc.

Title: **AMP/Audio Jack**

Size: Custom | Document Number: LA-4121P | Rev: 1.0

Date: Monday, March 17, 2008 | Sheet 24 of 51

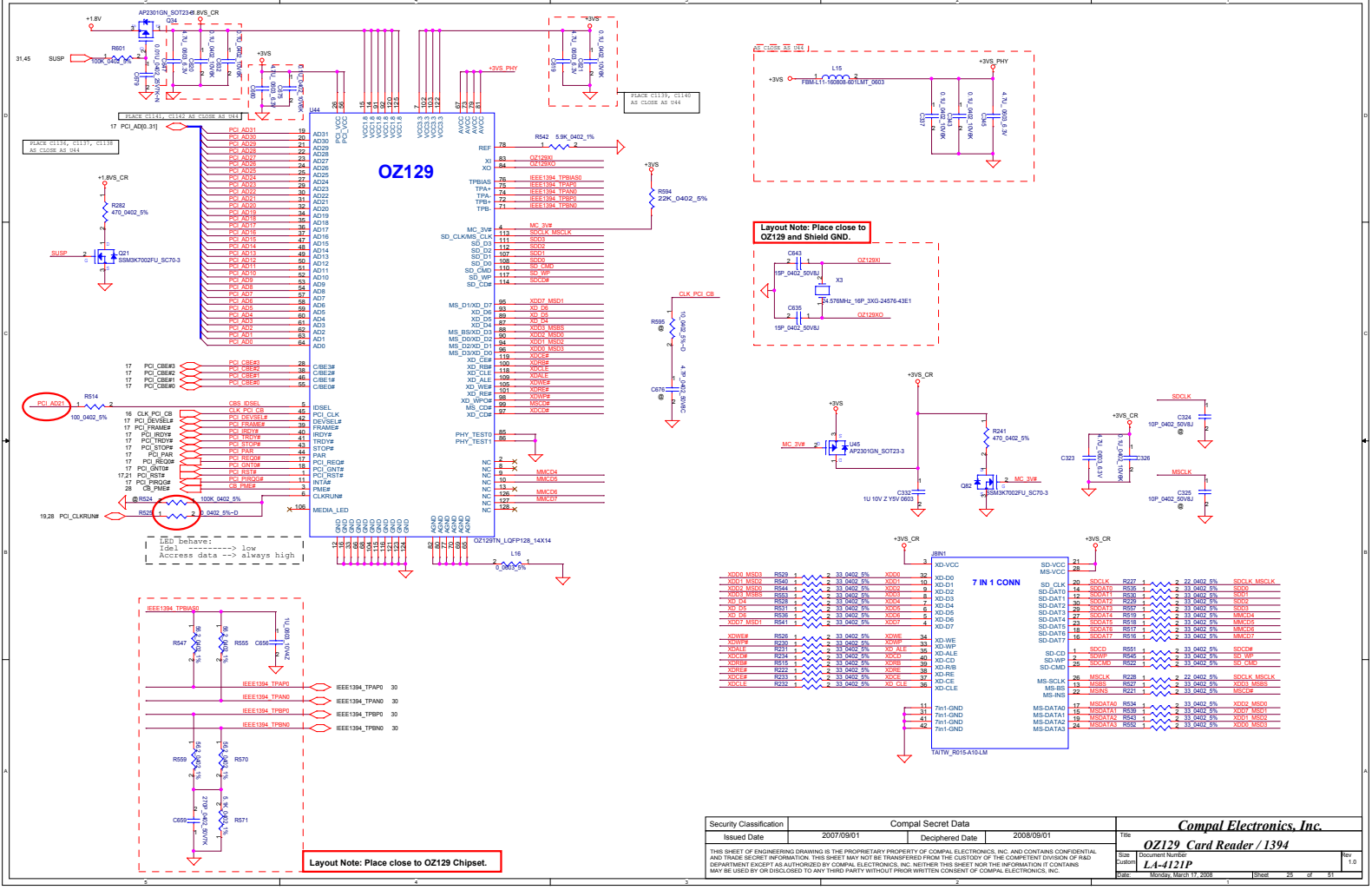

Security Classification	Compal Secret Data		
Issued Date	2007/09/01	Deciphered Date	2008/09/01

THIS SHEET OF ENGINEERING DRAWING IS THE PROPRIETARY PROPERTY OF COMPAL ELECTRONICS, INC. AND CONTAINS CONFIDENTIAL AND TRADE SECRET INFORMATION. THIS SHEET MAY NOT BE TRANSFERRED FROM THE CUSTODY OF THE COMPETENT DIVISION OF R&D DEPARTMENT EXCEPT AS AUTHORIZED BY COMPAL ELECTRONICS, INC. NEITHER THIS SHEET NOR THE INFORMATION IT CONTAINS MAY BE USED BY OR DISCLOSED TO ANY THIRD PARTY WITHOUT PRIOR WRITTEN CONSENT OF COMPAL ELECTRONICS, INC.

Compal Electronics, Inc.

Title: OZ129 Card Reader / 1394

Size: Custom | Document Number: LA-4121P | Rev: 1.0

Date: Monday, March 17, 2008 | Sheet 25 of 51

GRATIS - FOR FREE
hexainf@hotmail.com

Express Card Power Switch

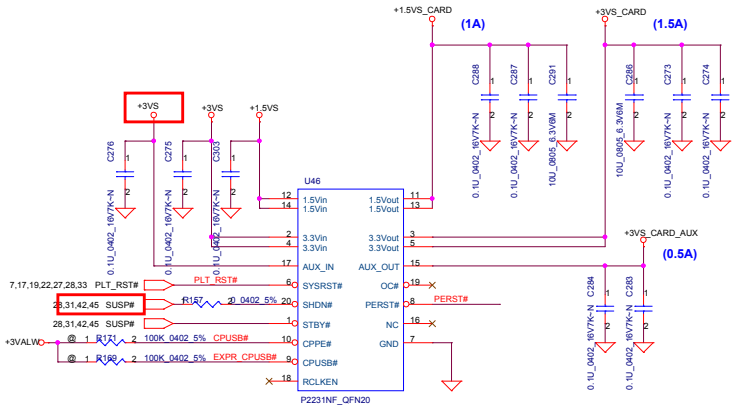

Express Card

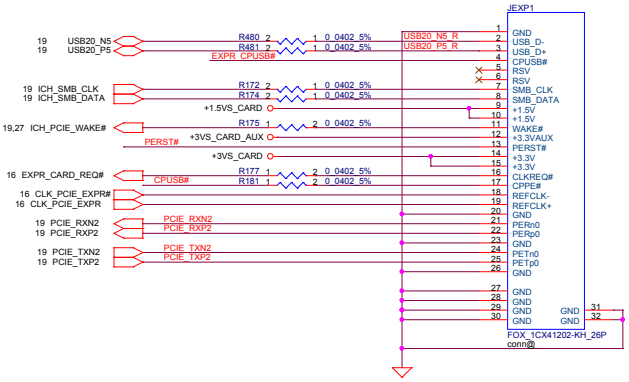

Security Classification	Compal Secret Data			Compal Electronics, Inc.
Issued Date	2007/1/15	Deciphered Date	2008/1/15	Title: Express Card
				Size: Custom; Document Number: LA-4121P; Rev: 1.0
				Date: Monday, March 17, 2008; Sheet 26 of 51

THIS SHEET OF ENGINEERING DRAWING IS THE PROPRIETARY PROPERTY OF COMPAL ELECTRONICS, INC. AND CONTAINS CONFIDENTIAL AND TRADE SECRET INFORMATION. THIS SHEET MAY NOT BE TRANSFERED FROM THE CUSTODY OF THE COMPETENT DIVISION OF R&D DEPARTMENT EXCEPT AS AUTHORIZED BY COMPAL ELECTRONICS, INC. NEITHER THIS SHEET NOR THE INFORMATION IT CONTAINS MAY BE USED BY OR DISCLOSED TO ANY THIRD PARTY WITHOUT PRIOR WRITTEN CONSENT OF COMPAL ELECTRONICS, INC.

Mini-Express Card---WLAN

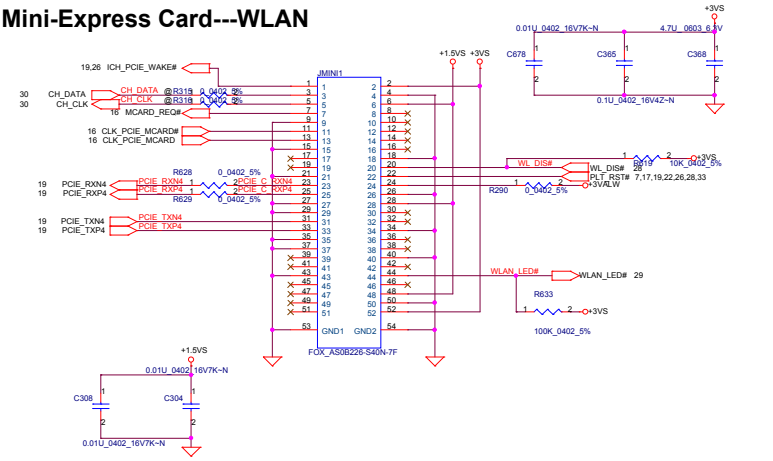

Robson

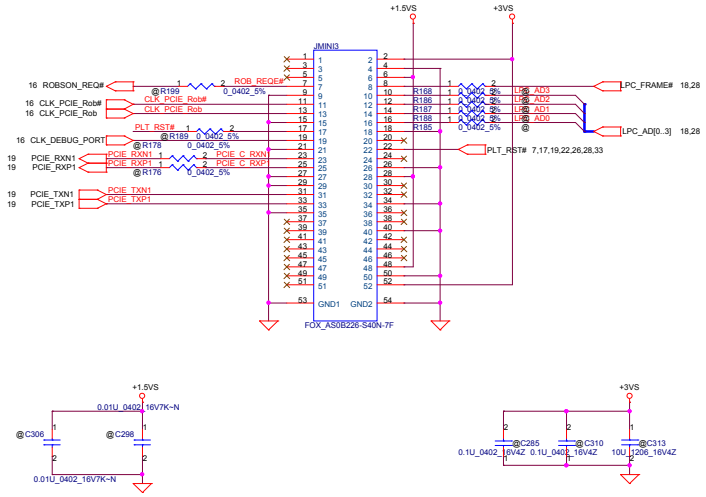

Mini-Express Card---WWAN

Mini-Express Card---Bluetooth

Security Classification	Compal Secret Data		
Issued Date	2007/1/15	Deciphered Date	2008/1/15

THIS SHEET OF ENGINEERING DRAWING IS THE PROPRIETARY PROPERTY OF COMPAL ELECTRONICS, INC. AND CONTAINS CONFIDENTIAL AND TRADE SECRET INFORMATION. THIS SHEET MAY NOT BE TRANSFERED FROM THE CUSTODY OF THE COMPETENT DIVISION OF R&D DEPARTMENT EXCEPT AS AUTHORIZED BY COMPAL ELECTRONICS, INC. NEITHER THIS SHEET NOR THE INFORMATION IT CONTAINS MAY BE USED BY OR DISCLOSED TO ANY THIRD PARTY WITHOUT PRIOR WRITTEN CONSENT OF COMPAL ELECTRONICS, INC.

Compal Electronics, Inc.

Title: **Mini Card**

Size: Custom | Document Number: LA-4121P | Rev: 1.0

Date: Monday, March 17, 2008 | Sheet 27 of 51

GRATIS - FOR FREE
hexainf@hotmail.com

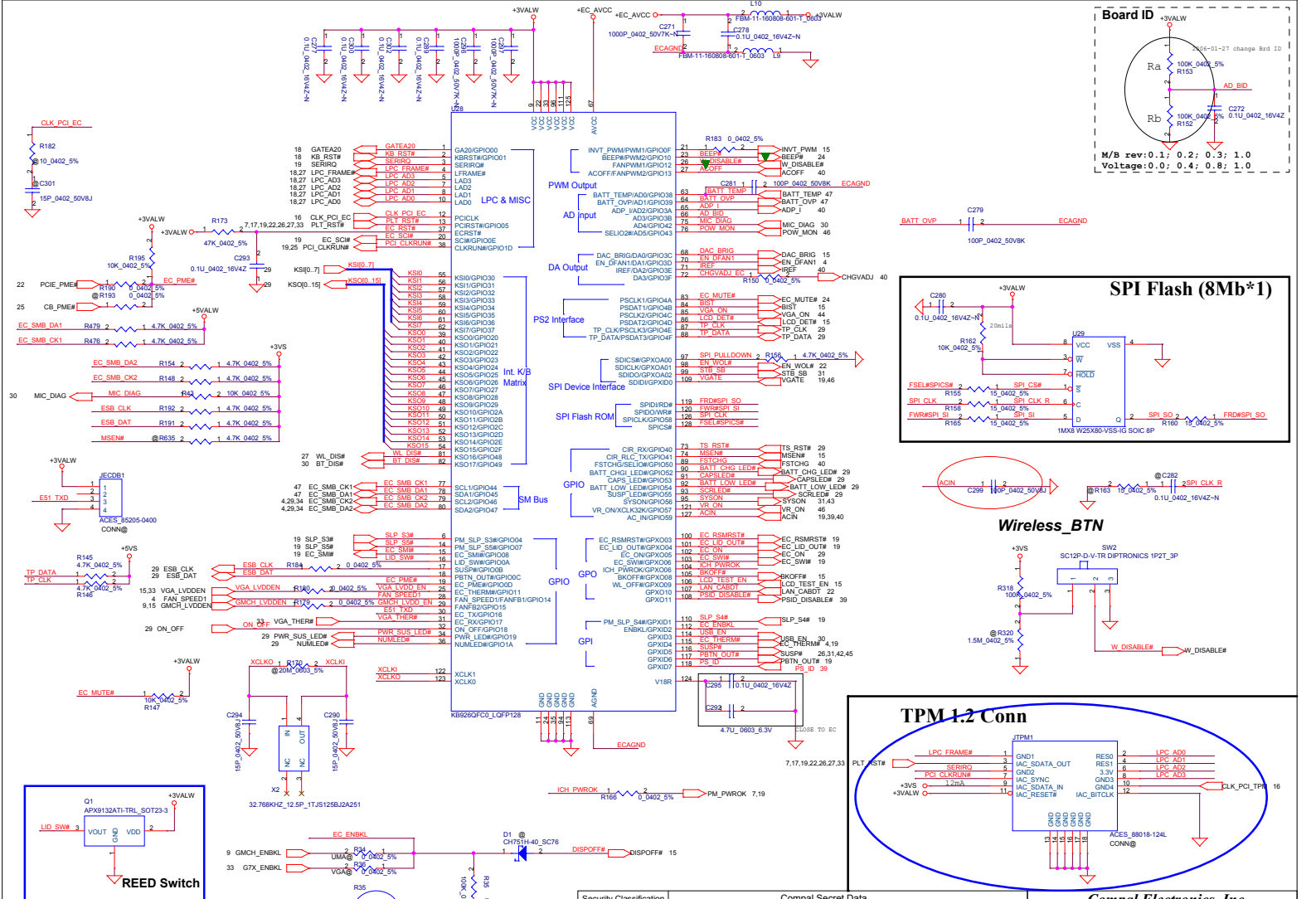

Security Classification	Compal Secret Data		
Issued Date	2007/1/15	Deciphered Date	2008/1/15

THIS SHEET OF ENGINEERING DRAWING IS THE PROPRIETARY PROPERTY OF COMPAL ELECTRONICS, INC. AND CONTAINS CONFIDENTIAL AND TRADE SECRET INFORMATION. THIS SHEET MAY NOT BE TRANSFERED FROM THE CUSTODY OF THE COMPETENT DIVISION OF R&D DEPARTMENT EXCEPT AS AUTHORIZED BY COMPAL ELECTRONICS, INC. NEITHER THIS SHEET NOR THE INFORMATION IT CONTAINS MAY BE USED BY OR DISCLOSED TO ANY THIRD PARTY WITHOUT PRIOR WRITTEN CONSENT OF COMPAL ELECTRONICS, INC.

Compal Electronics, Inc.

Title: EC KB926/BIOS/TPM

Size: Custom | Document Number: L4-4121P | Rev: 1.0

Date: Monday, March 17, 2008 | Sheet 28 of 51

Power Button

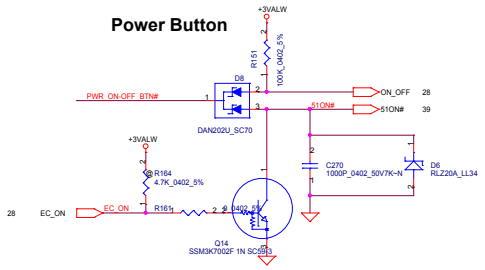

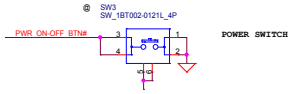

Regulator for ENE sensor

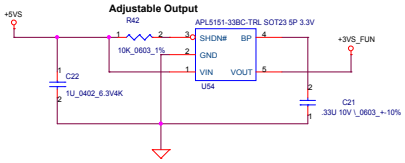

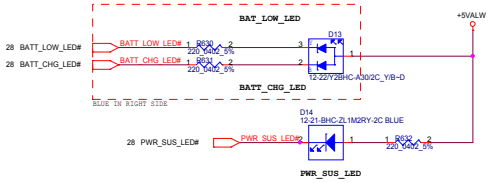

INT_KBD CONN.

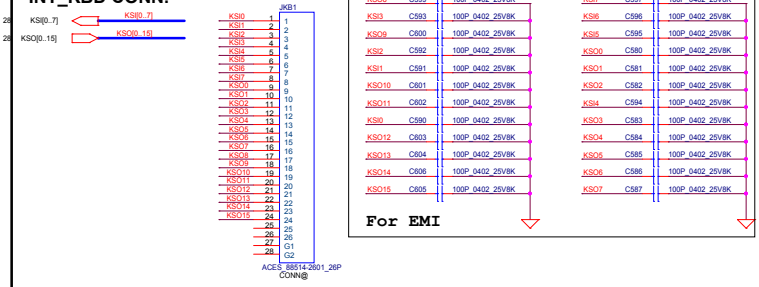

Function/B CONN.

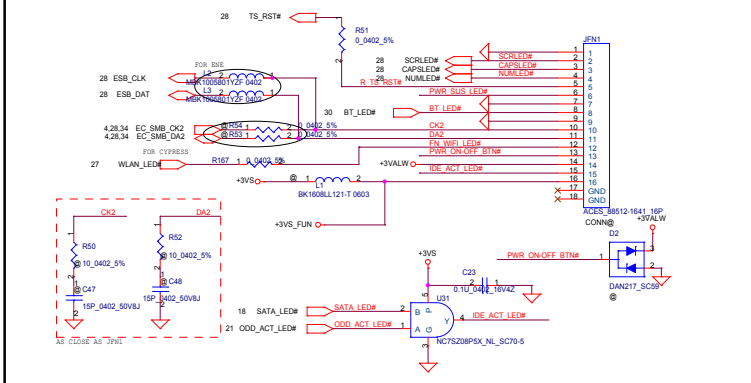

Touch PAD/B CONN.

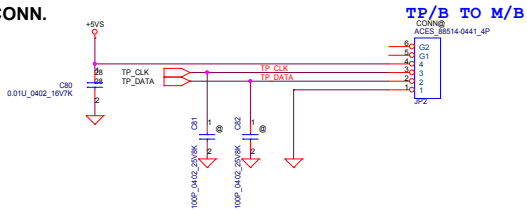

Security Classification	Compal Secret Data		
Issued Date	2007/1/15	Deciphered Date	2008/1/15

THIS SHEET OF ENGINEERING DRAWING IS THE PROPRIETARY PROPERTY OF COMPAL ELECTRONICS, INC. AND CONTAINS CONFIDENTIAL AND TRADE SECRET INFORMATION. THIS SHEET MAY NOT BE TRANSFERED FROM THE CUSTODY OF THE COMPETENT DIVISION OF R&D DEPARTMENT EXCEPT AS AUTHORIZED BY COMPAL ELECTRONICS, INC. NEITHER THIS SHEET NOR THE INFORMATION IT CONTAINS MAY BE USED BY OR DISCLOSED TO ANY THIRD PARTY WITHOUT PRIOR WRITTEN CONSENT OF COMPAL ELECTRONICS, INC.

Compal Electronics, Inc.

Title: PWR_OK/BTN/KB/TP

Size: Custom | Document Number: LA-4121P | Rev: 1.0

Date: Monday, March 17, 2008 | Sheet 29 of 51

GRATIS - FOR FREE
hexainf@hotmail.com

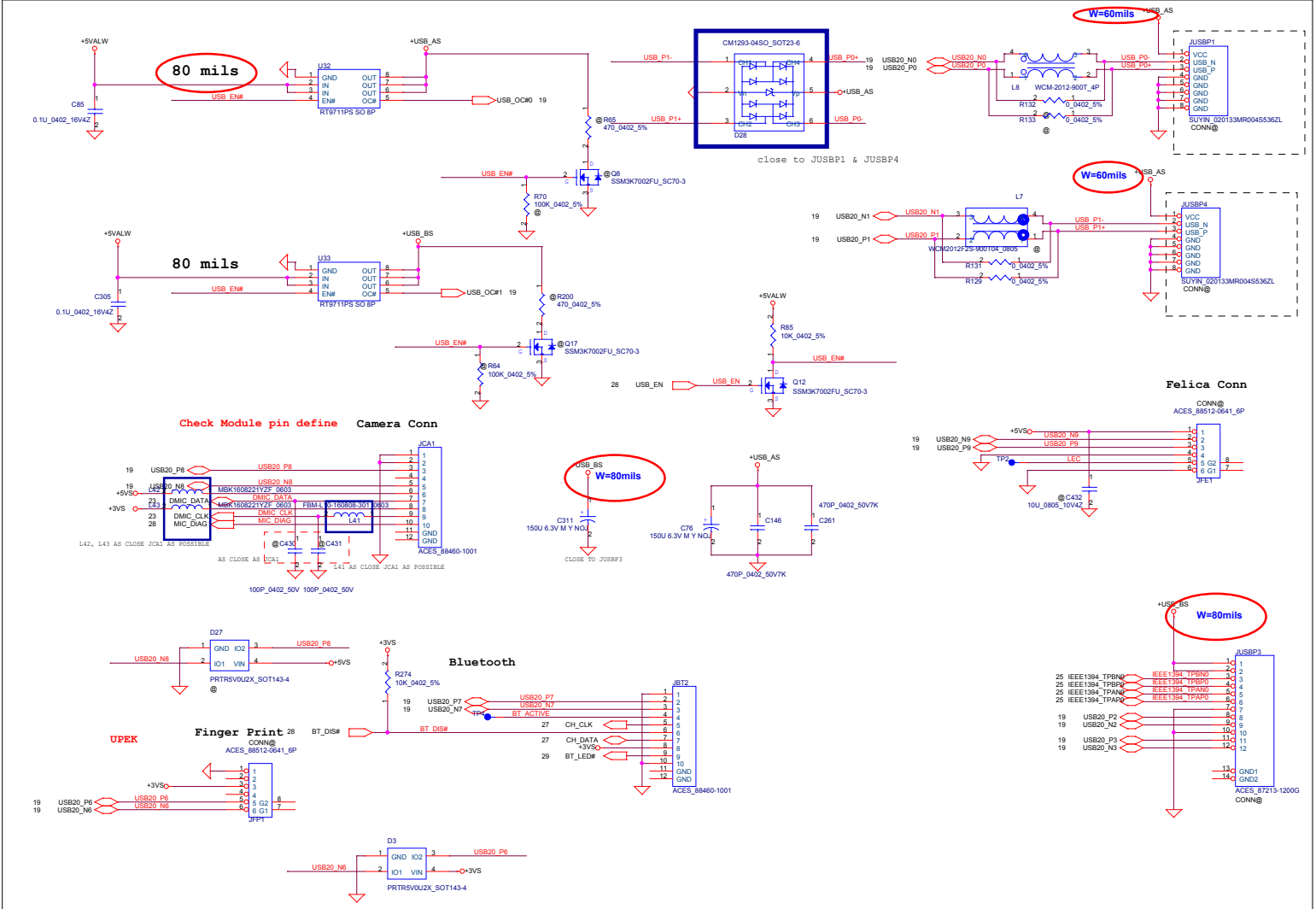

Security Classification	Compal Secret Data		
Issued Date	2007/1/15	Deciphered Date	2008/1/15

THIS SHEET OF ENGINEERING DRAWING IS THE PROPRIETARY PROPERTY OF COMPAL ELECTRONICS, INC. AND CONTAINS CONFIDENTIAL AND TRADE SECRET INFORMATION. THIS SHEET MAY NOT BE TRANSFERED FROM THE CUSTODY OF THE COMPETENT DIVISION OF R&D DEPARTMENT EXCEPT AS AUTHORIZED BY COMPAL ELECTRONICS, INC. NEITHER THIS SHEET NOR THE INFORMATION IT CONTAINS MAY BE USED BY OR DISCLOSED TO ANY THIRD PARTY WITHOUT PRIOR WRITTEN CONSENT OF COMPAL ELECTRONICS, INC.

Compal Electronics, Inc.

Title: USB/BlueTooth/FP/Felcia/Camera

Size: Custom | Document Number: LA-4121P | Rev: 1.0

Date: Monday, March 17, 2008 | Sheet 30 of 51

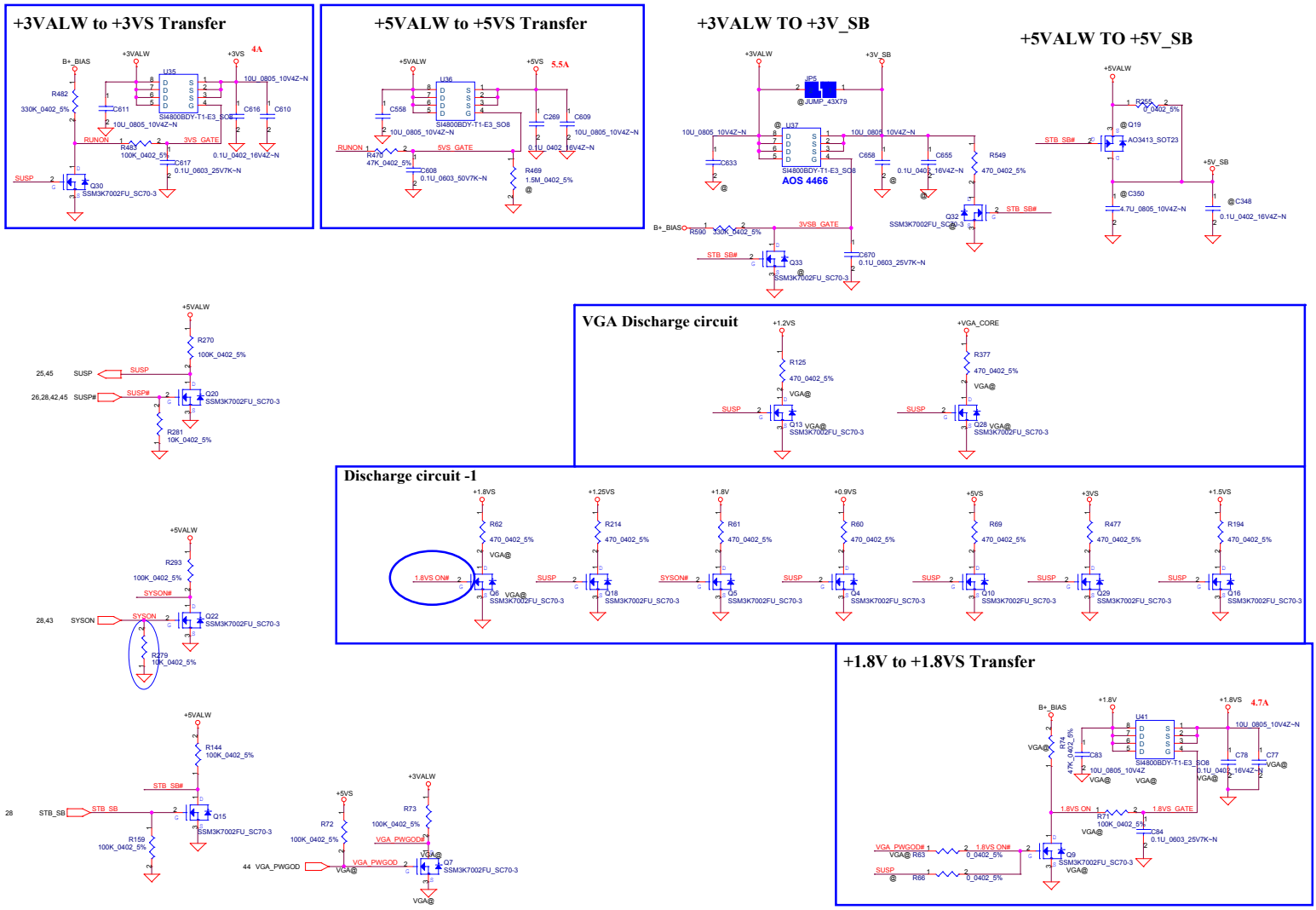

Security Classification	Compal Secret Data		
Issued Date	2007/1/15	Deciphered Date	2008/1/15

THIS SHEET OF ENGINEERING DRAWING IS THE PROPRIETARY PROPERTY OF COMPAL ELECTRONICS, INC. AND CONTAINS CONFIDENTIAL AND TRADE SECRET INFORMATION. THIS SHEET MAY NOT BE TRANSFERED FROM THE CUSTODY OF THE COMPETENT DIVISION OF R&D DEPARTMENT EXCEPT AS AUTHORIZED BY COMPAL ELECTRONICS, INC. NEITHER THIS SHEET NOR THE INFORMATION IT CONTAINS MAY BE USED BY OR DISCLOSED TO ANY THIRD PARTY WITHOUT PRIOR WRITTEN CONSENT OF COMPAL ELECTRONICS, INC.

Compal Electronics, Inc.

Title: **DC/DC Circuits**

Size: Custom | Document Number: LA-4121P | Rev: 1.0

Date: Monday, March 17, 2008 | Sheet 31 of 51

GRATIS - FOR FREE
hexainf@hotmail.com

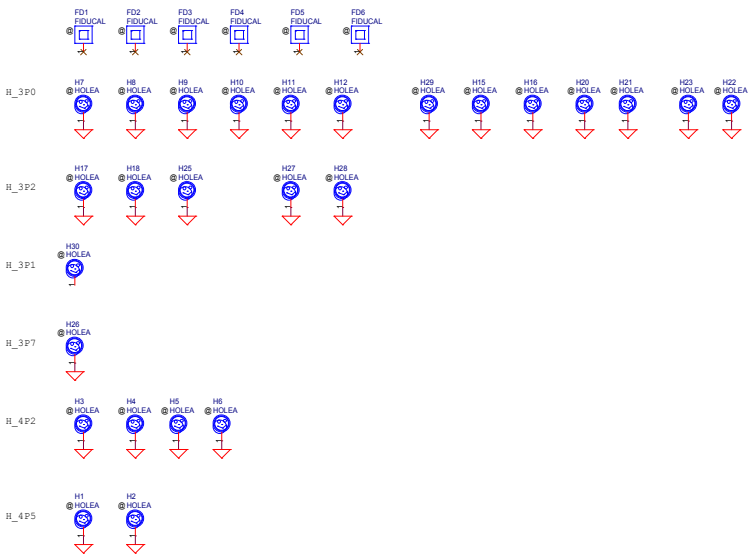

Security Classification	Compal Secret Data		
Issued Date	2007/1/15	Deciphered Date	2008/1/15

THIS SHEET OF ENGINEERING DRAWING IS THE PROPRIETARY PROPERTY OF COMPAL ELECTRONICS, INC. AND CONTAINS CONFIDENTIAL AND TRADE SECRET INFORMATION. THIS SHEET MAY NOT BE TRANSFERED FROM THE CUSTODY OF THE COMPETENT DIVISION OF R&D DEPARTMENT EXCEPT AS AUTHORIZED BY COMPAL ELECTRONICS, INC. NEITHER THIS SHEET NOR THE INFORMATION IT CONTAINS MAY BE USED BY OR DISCLOSED TO ANY THIRD PARTY WITHOUT PRIOR WRITTEN CONSENT OF COMPAL ELECTRONICS, INC.

Compal Electronics, Inc.

Title: *Screws*

Size: Custom | Document Number: *LA-4121P* | Rev: 1.0

Date: Monday, March 17, 2008 | Sheet 32 of 51

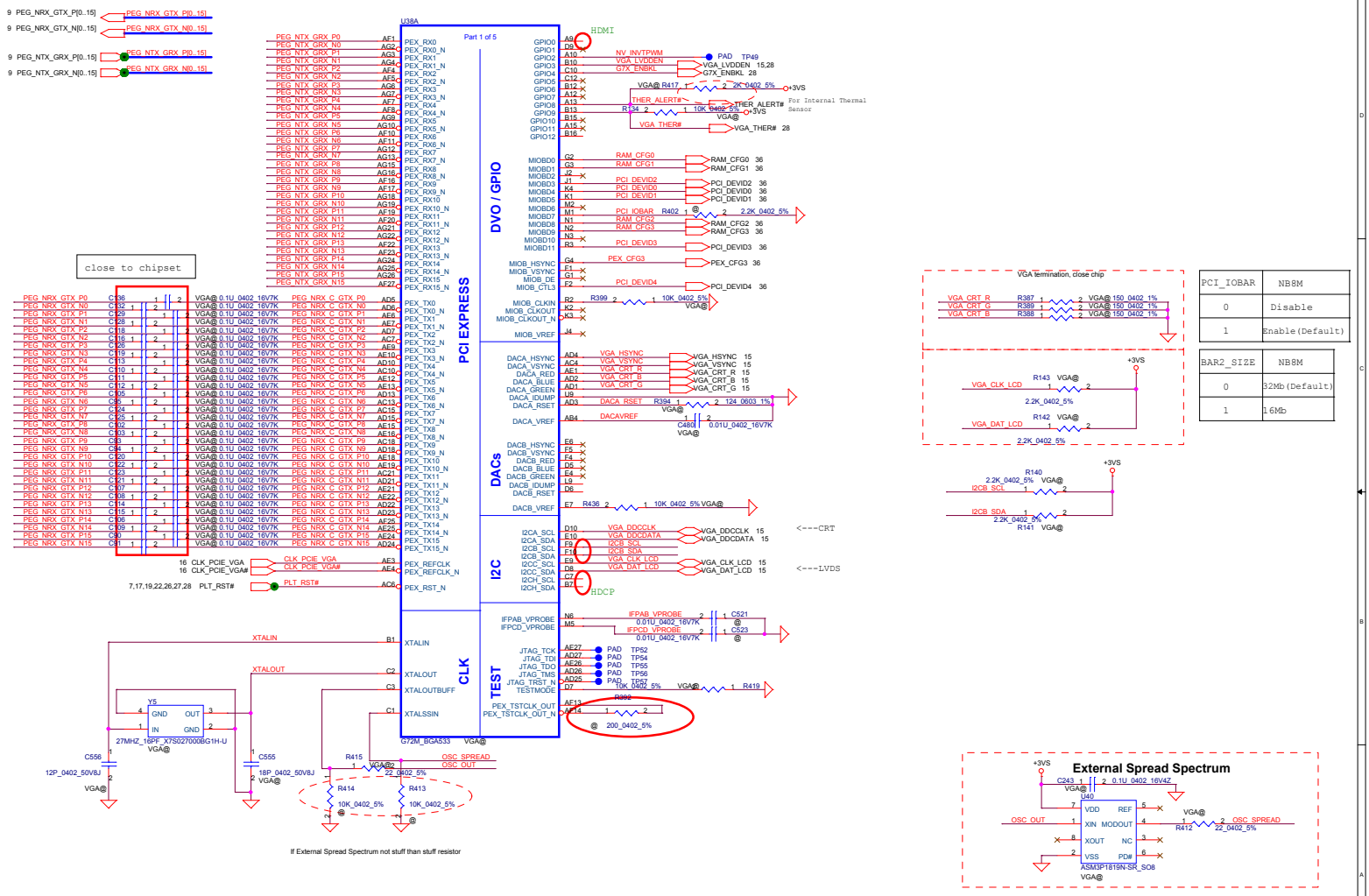

PCI_IOBAR	NB8M
0	Disable
1	Enable(Default)

BAR2_SIZE	NB8M
0	32Mb(Default)
1	16Mb

Security Classification	Compal Secret Data		
Issued Date	2006/07/10	Deciphered Date	2007/07/10

THIS SHEET OF ENGINEERING DRAWING IS THE PROPRIETARY PROPERTY OF COMPAL ELECTRONICS, INC. AND CONTAINS CONFIDENTIAL AND TRADE SECRET INFORMATION. THIS SHEET MAY NOT BE TRANSFERED FROM THE CUSTODY OF THE COMPETENT DIVISION OF R&D DEPARTMENT EXCEPT AS AUTHORIZED BY COMPAL ELECTRONICS, INC. NEITHER THIS SHEET NOR THE INFORMATION IT CONTAINS MAY BE USED BY OR DISCLOSED TO ANY THIRD PARTY WITHOUT PRIOR WRITTEN CONSENT OF COMPAL ELECTRONICS, INC.

Compal Electronics, Inc.

Title: NB8M-GS Main

Size: Custom | Document Number | Rev 1.0

Date: Monday, March 17, 2008 | Sheet 33 of 51

GRATIS - FOR FREE
hexainf@hotmail.com

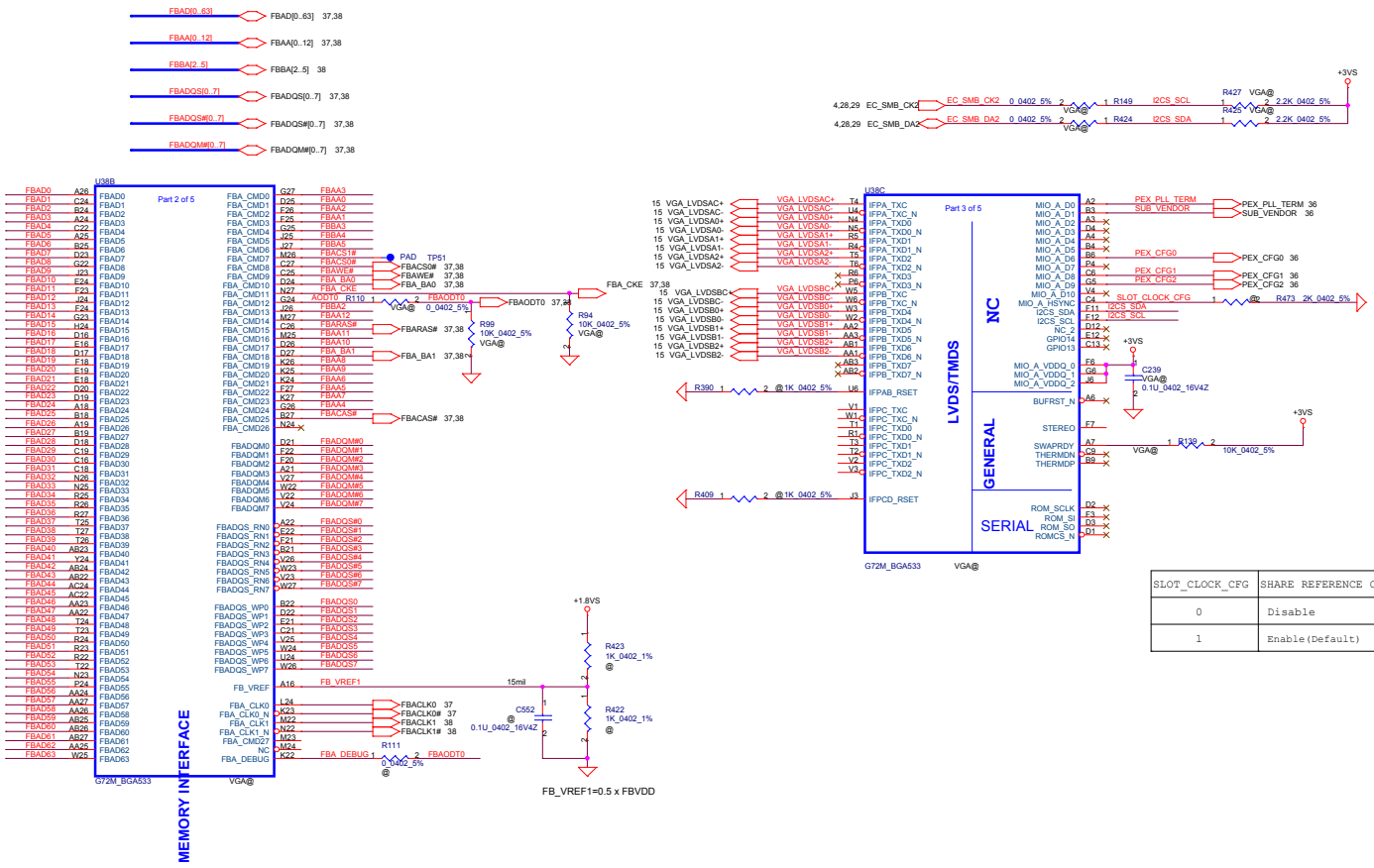

SLOT_CLOCK_CFG	SHARE REFERENCE CLOCK
0	Disable
1	Enable(Default)

Security Classification	Compal Secret Data		
Issued Date	2006/07/10	Deciphered Date	2007/07/10

THIS SHEET OF ENGINEERING DRAWING IS THE PROPRIETARY PROPERTY OF COMPAL ELECTRONICS, INC. AND CONTAINS CONFIDENTIAL AND TRADE SECRET INFORMATION. THIS SHEET MAY NOT BE TRANSFERED FROM THE CUSTODY OF THE COMPETENT DIVISION OF R&D DEPARTMENT EXCEPT AS AUTHORIZED BY COMPAL ELECTRONICS, INC. NEITHER THIS SHEET NOR THE INFORMATION IT CONTAINS MAY BE USED BY OR DISCLOSED TO ANY THIRD PARTY WITHOUT PRIOR WRITTEN CONSENT OF COMPAL ELECTRONICS, INC.

Compal Electronics, Inc.

Title: NB8M-GS Memory

Size: Custom | Document Number | Rev 1.0

Date: Monday, March 17, 2008 | Sheet 34 of 51

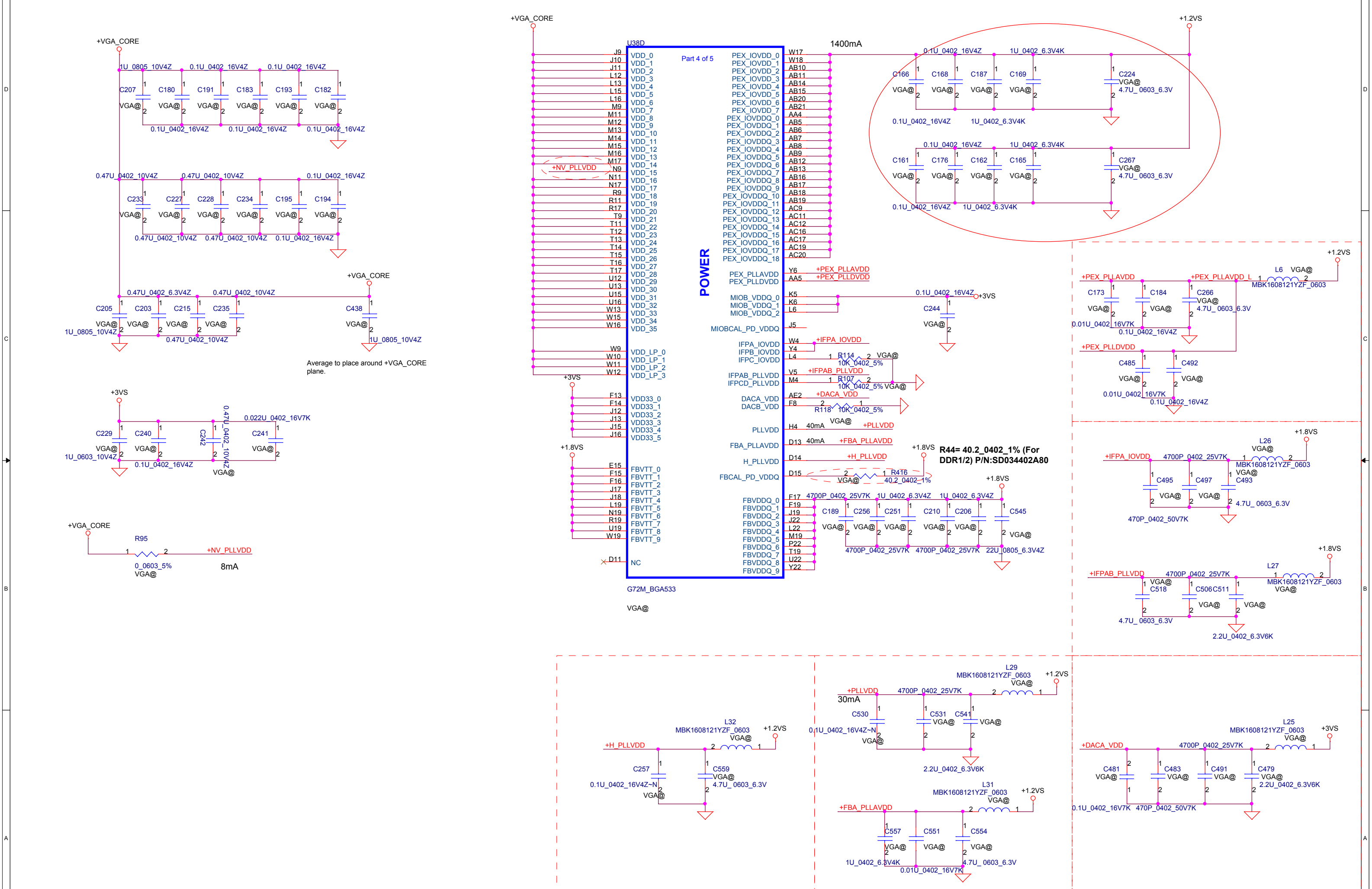

Security Classification	Compal Secret Data		
Issued Date	2006/07/10	Deciphered Date	2007/07/10

THIS SHEET OF ENGINEERING DRAWING IS THE PROPRIETARY PROPERTY OF COMPAL ELECTRONICS, INC. AND CONTAINS CONFIDENTIAL AND TRADE SECRET INFORMATION. THIS SHEET MAY NOT BE TRANSFERED FROM THE CUSTODY OF THE COMPETENT DIVISION OF R&D DEPARTMENT EXCEPT AS AUTHORIZED BY COMPAL ELECTRONICS, INC. NEITHER THIS SHEET NOR THE INFORMATION IT CONTAINS MAY BE USED BY OR DISCLOSED TO ANY THIRD PARTY WITHOUT PRIOR WRITTEN CONSENT OF COMPAL ELECTRONICS, INC.

Compal Electronics, Inc.

Title: NB8M-GS Power

Size: Custom | Document Number | Rev 1.0

Date: Monday, March 17, 2008 | Sheet 35 of 51

GRATIS - FOR FREE
hexainf@hotmail.com

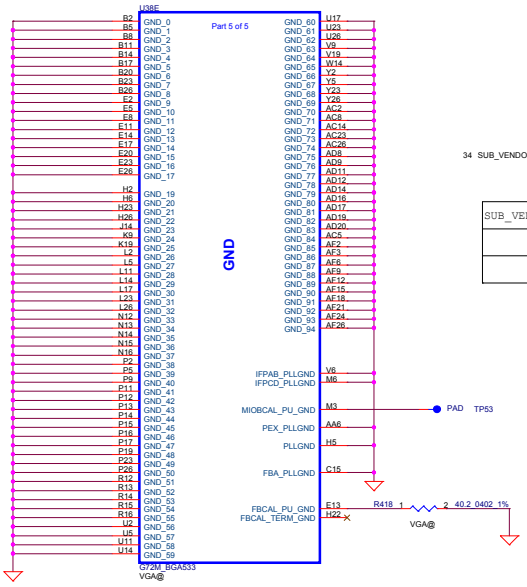

34 SUB_VENDOR — SUB_VENDOR — R428 1 2 2K 0402 5% VGA@

SUB_VENDOR	
0	NO VIDEO BIOS ROM
1	BIOS ROM is present(Default)

STRAPS	PIN	DESCRIPTION	Value	Value
SUB_VENDOR	MIOAD1	VBIOS on card (pull high) VBIOS with system BIOS (pull down)	0	
PEX_PLL_TERM	MIOAD0		0	
PEX_CFG[2:0]	MIOAD [9,8,6]	Recommended for G7x	001	
RAM_CFG[3:0]	MIOAD[5:2]	**RAM_CFG[3] (Bandwidth 0=Full, 1=Half)**		
		RAM_CFG[2] (0=16M or 1=32M)		
		RAM_CFG[1:0] (Manufacture) (01=Sam, 10=Inf, 11=Hyn)		
PCI_DEVID[3:0]	VIPD[5:3] MIOA_HSYNC	G73M-xxxx8 G72M-0x01D8 NB8M-GS : 0X0427 NB8M-SE : 0X0428	0111 1000	
		G72MV-0x01D7 TBD/TBD	0111	

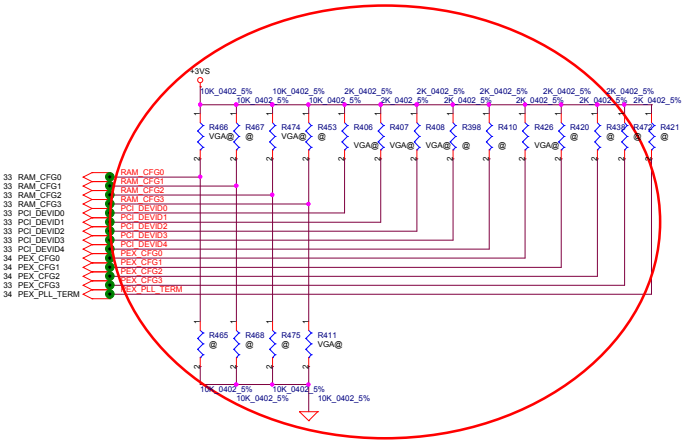

Bandwidth		RAM Type		Vendor	
FULL	R17	32M	R11	Samsung	**R20, R19**
HALF	R12	16M	R16	Hynix	**R18, R19**
				Infineon	**R18, R21**

Package		
(10*12.5)	**Infineon GDDR2(400): SA00000S800 (HYB18T256161AFL-25)**	**Infineon GDDR2(350): SA00000T700 (HYB18T256161AF-28)**
(11*13)	**Samsung GDDR2 (400): SA00000FG10 (K4N56163QF-ZC25)**	**Samsung GDDR2 (350): SA00000TB00 (K4N56163QF-ZC2A)**
(8*13)	**Hynix GDDR2 (400): SA00000FF10 (HY5PS561621AFP-25)**	**Hynix GDDR2 (350): SA00000TJ00 (HY5PS561621AFP-28)**

Security Classification	Compal Secret Data		
Issued Date	2006/07/10	Deciphered Date	2007/07/10

THIS SHEET OF ENGINEERING DRAWING IS THE PROPRIETARY PROPERTY OF COMPAL ELECTRONICS, INC. AND CONTAINS CONFIDENTIAL AND TRADE SECRET INFORMATION. THIS SHEET MAY NOT BE TRANSFERED FROM THE CUSTODY OF THE COMPETENT DIVISION OF R&D DEPARTMENT EXCEPT AS AUTHORIZED BY COMPAL ELECTRONICS, INC. NEITHER THIS SHEET NOR THE INFORMATION IT CONTAINS MAY BE USED BY OR DISCLOSED TO ANY THIRD PARTY WITHOUT PRIOR WRITTEN CONSENT OF COMPAL ELECTRONICS, INC.

Compal Electronics, Inc.

Title: NB8M-GS GND & STRAP

Size: Custom | Document Number | Rev 1.0

Date: Monday, March 17, 2008 | Sheet 36 of 51

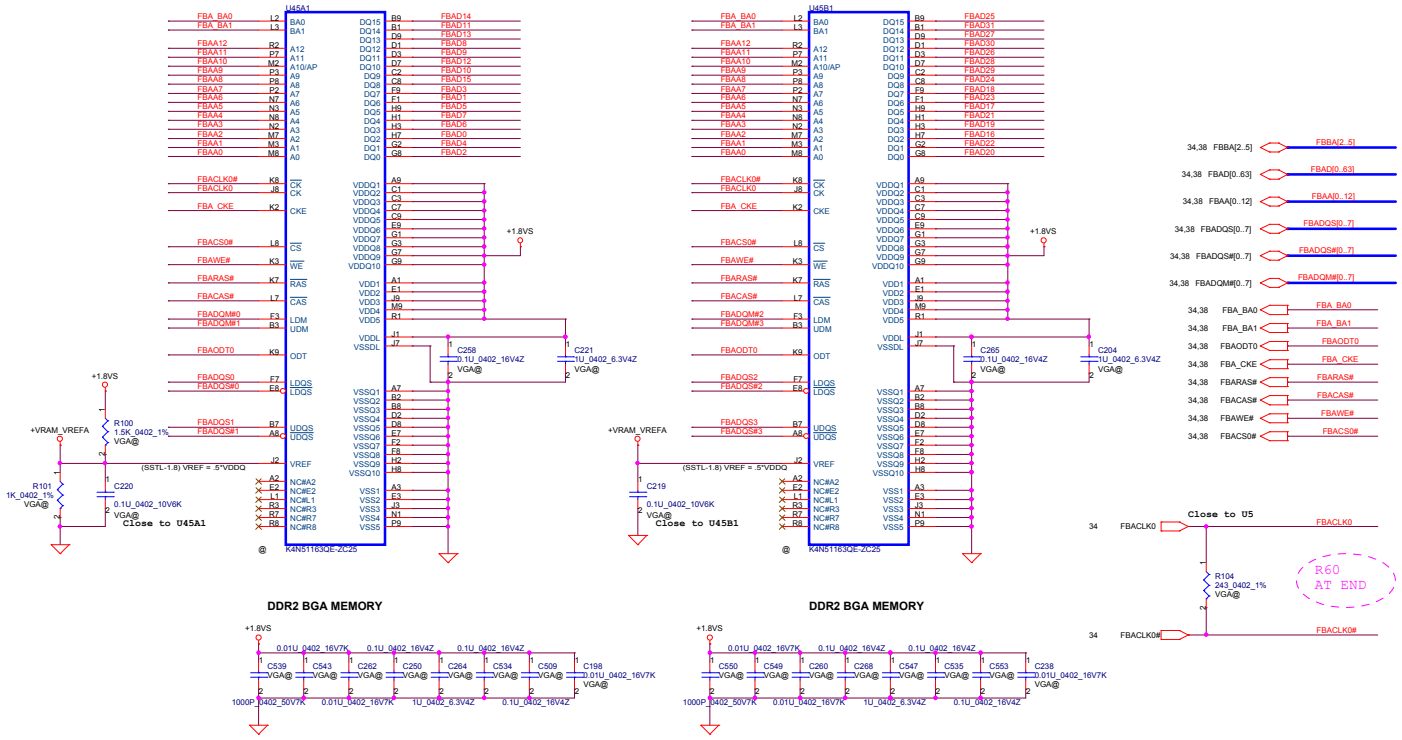

DDR2 BGA MEMORY

DDR2 BGA MEMORY

Security Classification	Compal Secret Data		
Issued Date	2006/07/10	Deciphered Date	2007/07/10

THIS SHEET OF ENGINEERING DRAWING IS THE PROPRIETARY PROPERTY OF COMPAL ELECTRONICS, INC. AND CONTAINS CONFIDENTIAL AND TRADE SECRET INFORMATION. THIS SHEET MAY NOT BE TRANSFERED FROM THE CUSTODY OF THE COMPETENT DIVISION OF R&D DEPARTMENT EXCEPT AS AUTHORIZED BY COMPAL ELECTRONICS, INC. NEITHER THIS SHEET NOR THE INFORMATION IT CONTAINS MAY BE USED BY OR DISCLOSED TO ANY THIRD PARTY WITHOUT PRIOR WRITTEN CONSENT OF COMPAL ELECTRONICS, INC.

Compal Electronics, Inc.

Title: VRAM DDRA

Size: Custom | Document Number: | Rev: 1.0

Date: Monday, March 17, 2008 | Sheet 37 of 51

GRATIS - FOR FREE
hexainf@hotmail.com

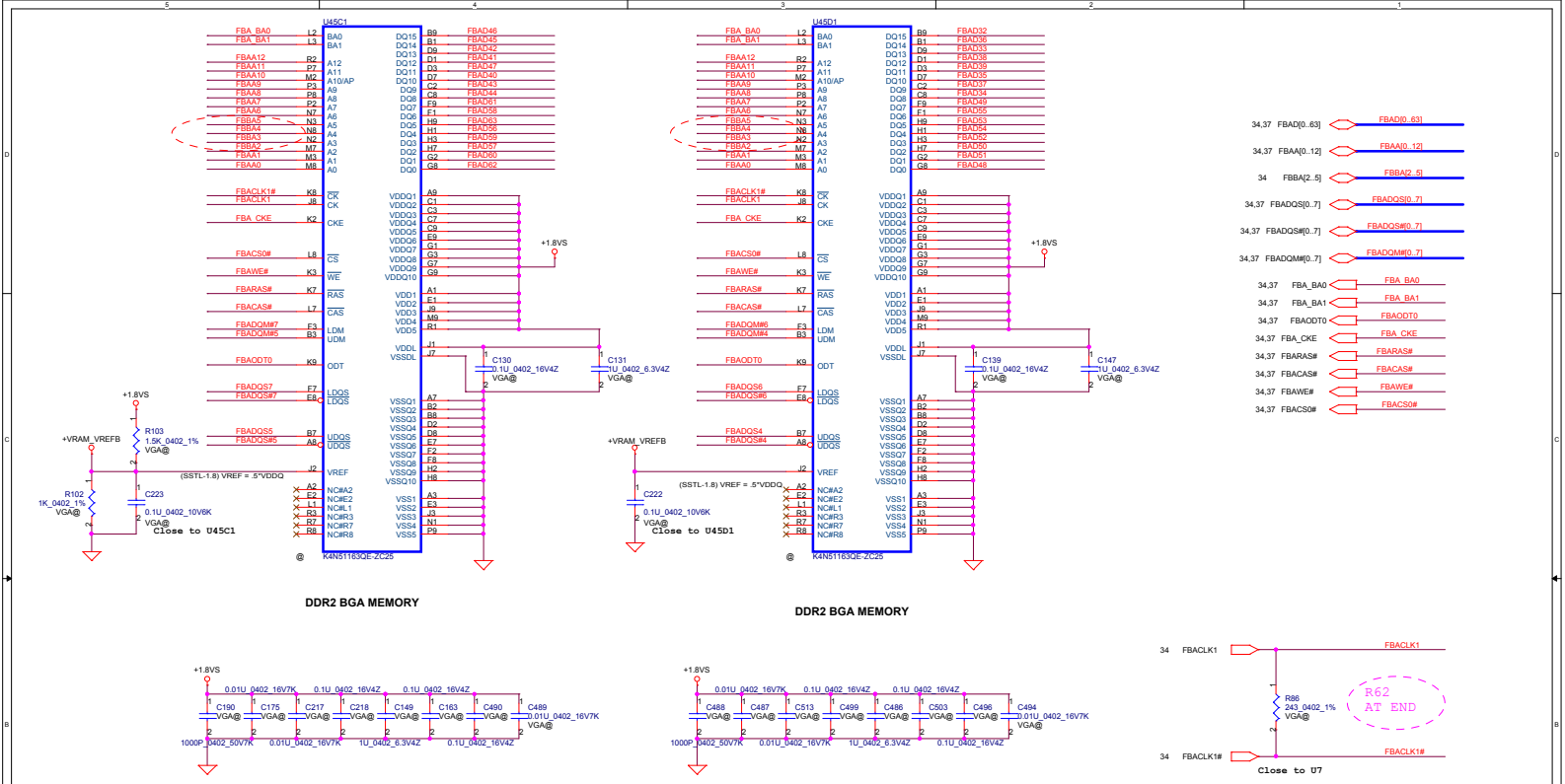

DDR2 BGA MEMORY

DDR2 BGA MEMORY

Security Classification	Compal Secret Data		
Issued Date	2006/07/10	Deciphered Date	2007/07/10

THIS SHEET OF ENGINEERING DRAWING IS THE PROPRIETARY PROPERTY OF COMPAL ELECTRONICS, INC. AND CONTAINS CONFIDENTIAL AND TRADE SECRET INFORMATION. THIS SHEET MAY NOT BE TRANSFERED FROM THE CUSTODY OF THE COMPETENT DIVISION OF R&D DEPARTMENT EXCEPT AS AUTHORIZED BY COMPAL ELECTRONICS, INC. NEITHER THIS SHEET NOR THE INFORMATION IT CONTAINS MAY BE USED BY OR DISCLOSED TO ANY THIRD PARTY WITHOUT PRIOR WRITTEN CONSENT OF COMPAL ELECTRONICS, INC.

Compal Electronics, Inc.

Title: VRAM DDRB

Size: Custom | Document Number: | Rev: 1.0

Date: Monday, March 17, 2008 | Sheet 38 of 51

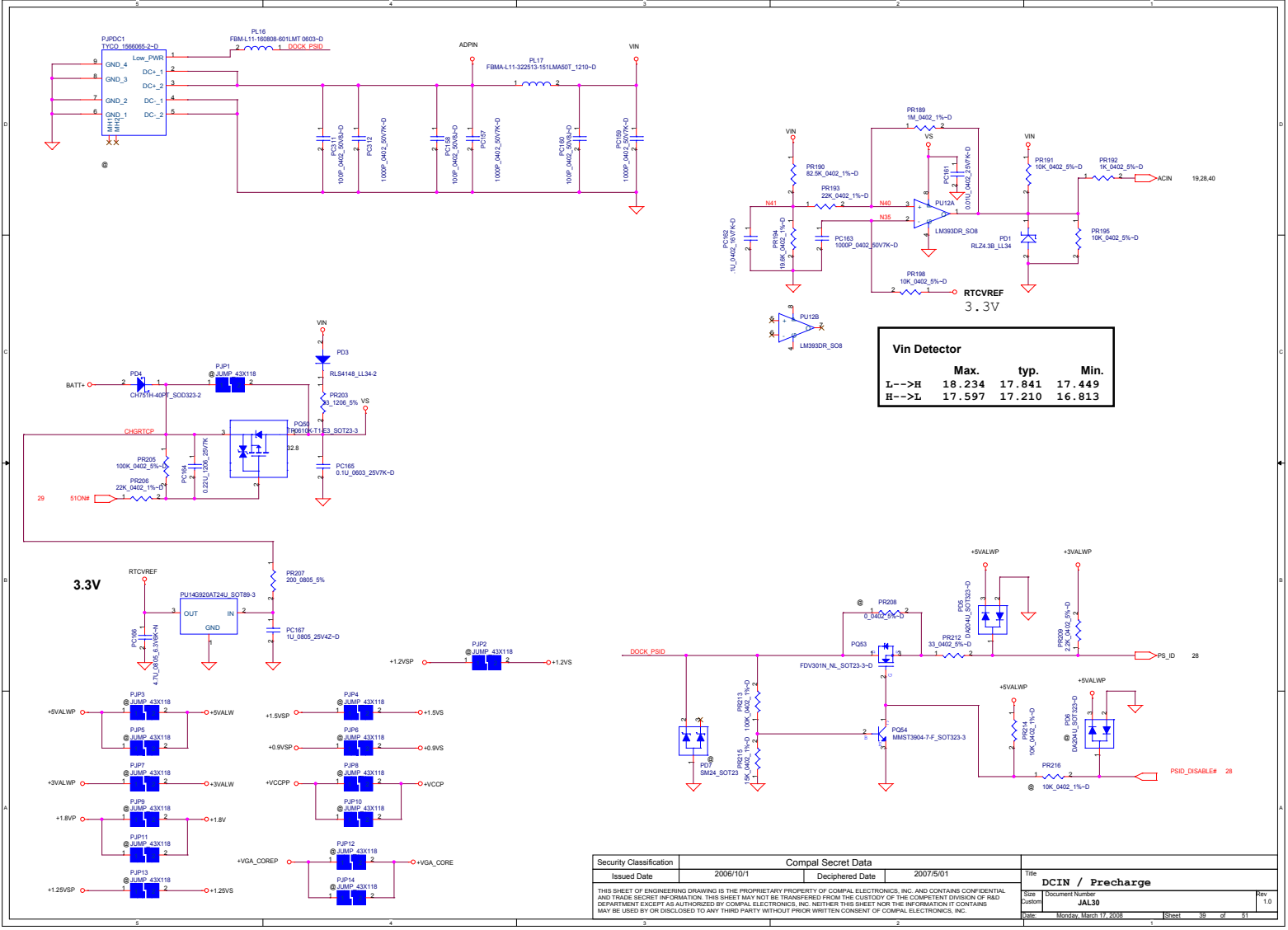

Vin Detector

	Max.	typ.	Min.
L-->H	18.234	17.841	17.449
H-->L	17.597	17.210	16.813

Security Classification	Compal Secret Data		
Issued Date	2006/10/1	Deciphered Date	2007/5/01

THIS SHEET OF ENGINEERING DRAWING IS THE PROPRIETARY PROPERTY OF COMPAL ELECTRONICS, INC. AND CONTAINS CONFIDENTIAL AND TRADE SECRET INFORMATION. THIS SHEET MAY NOT BE TRANSFERED FROM THE CUSTODY OF THE COMPETENT DIVISION OF R&D DEPARTMENT EXCEPT AS AUTHORIZED BY COMPAL ELECTRONICS, INC. NEITHER THIS SHEET NOR THE INFORMATION IT CONTAINS MAY BE USED BY OR DISCLOSED TO ANY THIRD PARTY WITHOUT PRIOR WRITTEN CONSENT OF COMPAL ELECTRONICS, INC.

Title: **DCIN / Precharge**

Size: Custom | Document Number: **JAL30** | Rev: 1.0

Date: Monday, March 17, 2008 | Sheet 39 of 51

GRATIS - FOR FREE
hexainf@hotmail.com

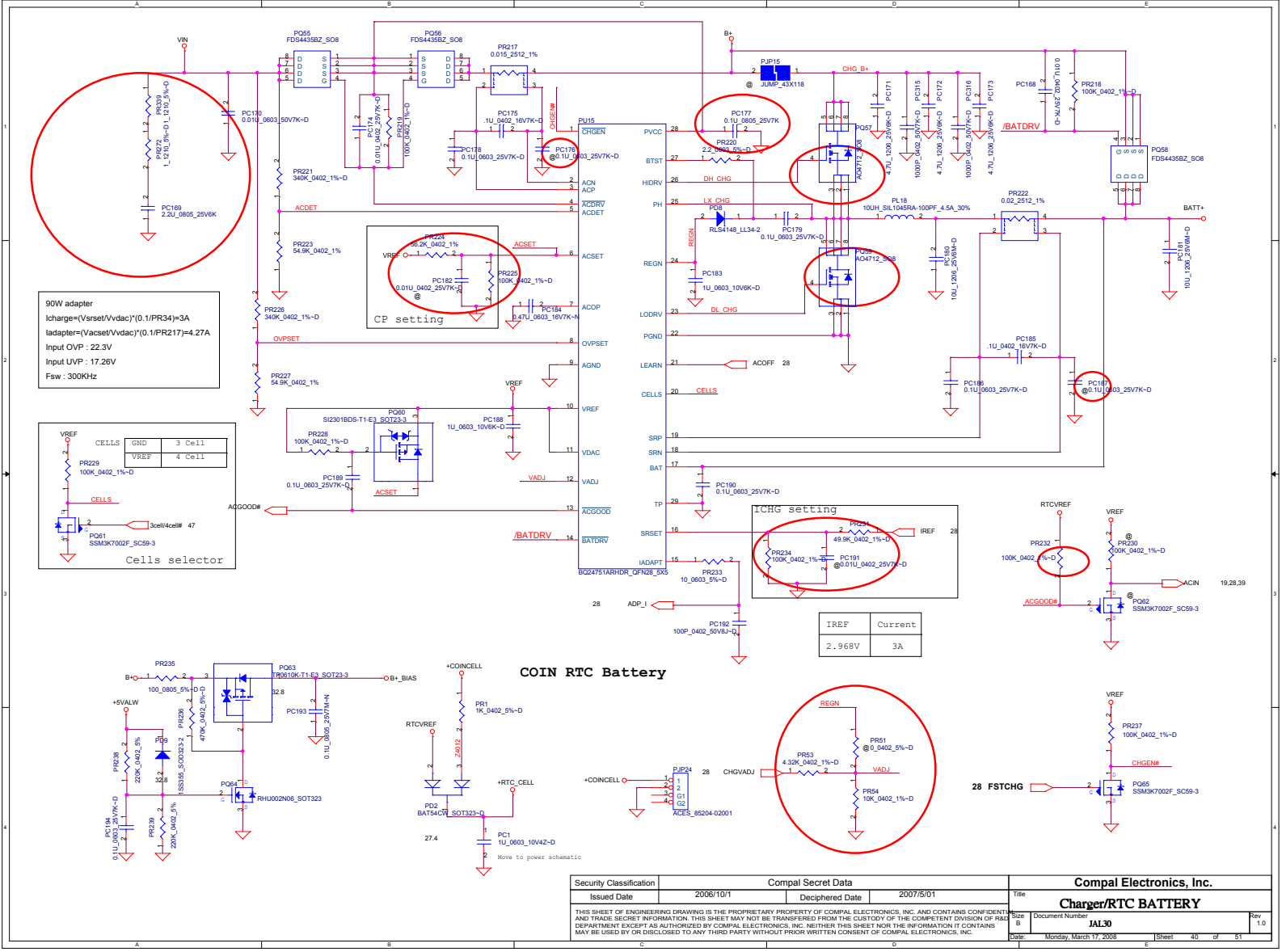

Security Classification	Compal Secret Data		
Issued Date	2006/10/1	Deciphered Date	2007/5/01

THIS SHEET OF ENGINEERING DRAWING IS THE PROPRIETARY PROPERTY OF COMPAL ELECTRONICS, INC. AND CONTAINS CONFIDENTIAL AND TRADE SECRET INFORMATION. THIS SHEET MAY NOT BE TRANSFERED FROM THE CUSTODY OF THE COMPETENT DIVISION OF R&D DEPARTMENT EXCEPT AS AUTHORIZED BY COMPAL ELECTRONICS, INC. NEITHER THIS SHEET NOR THE INFORMATION IT CONTAINS MAY BE USED BY OR DISCLOSED TO ANY THIRD PARTY WITHOUT PRIOR WRITTEN CONSENT OF COMPAL ELECTRONICS, INC.

Compal Electronics, Inc.

Title: **Charger/RTC BATTERY**

Size: B | Document Number: JAL30 | Rev: 1.0

Date: Monday, March 17, 2008 | Sheet 40 of 51

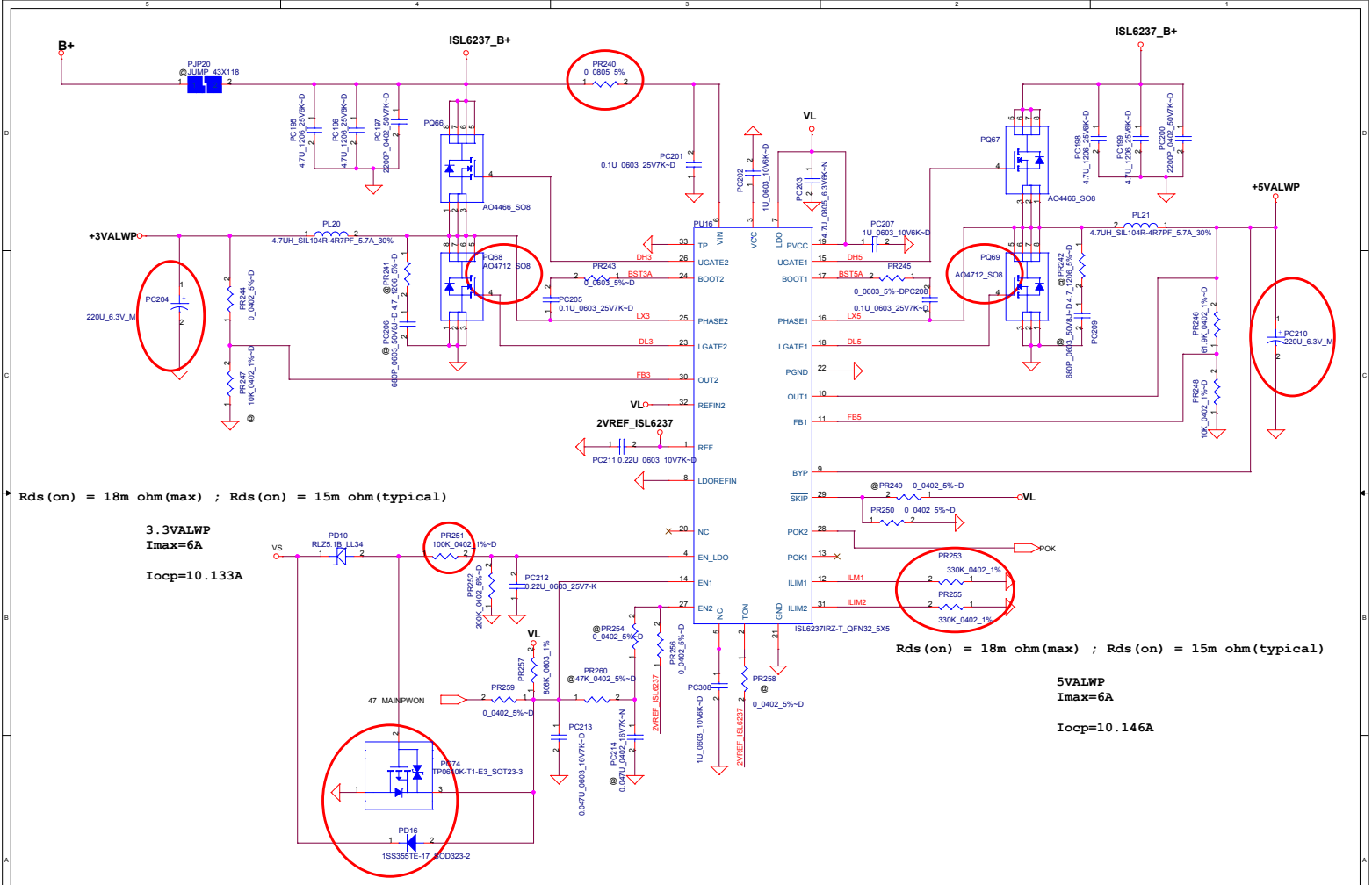

Security Classification	Compal Secret Data			Compal Electronics, Inc.
Issued Date	2006/10/1	Deciphered Date	2007/05/30	Title: +3VALWP, +5VALWP

THIS SHEET OF ENGINEERING DRAWING IS THE PROPRIETARY PROPERTY OF COMPAL ELECTRONICS, INC. AND CONTAINS CONFIDENTIAL AND TRADE SECRET INFORMATION. THIS SHEET MAY NOT BE TRANSFERED FROM THE CUSTODY OF THE COMPETENT DIVISION OF R&D DEPARTMENT EXCEPT AS AUTHORIZED BY COMPAL ELECTRONICS, INC. NEITHER THIS SHEET NOR THE INFORMATION IT CONTAINS MAY BE USED BY OR DISCLOSED TO ANY THIRD PARTY WITHOUT PRIOR WRITTEN CONSENT OF COMPAL ELECTRONICS, INC.

Size: Custom	Document Number: JAL30	Rev: 1.0
Date: Monday, March 17, 2008	Sheet 41 of 51	

GRATIS - FOR FREE
hexainf@hotmail.com

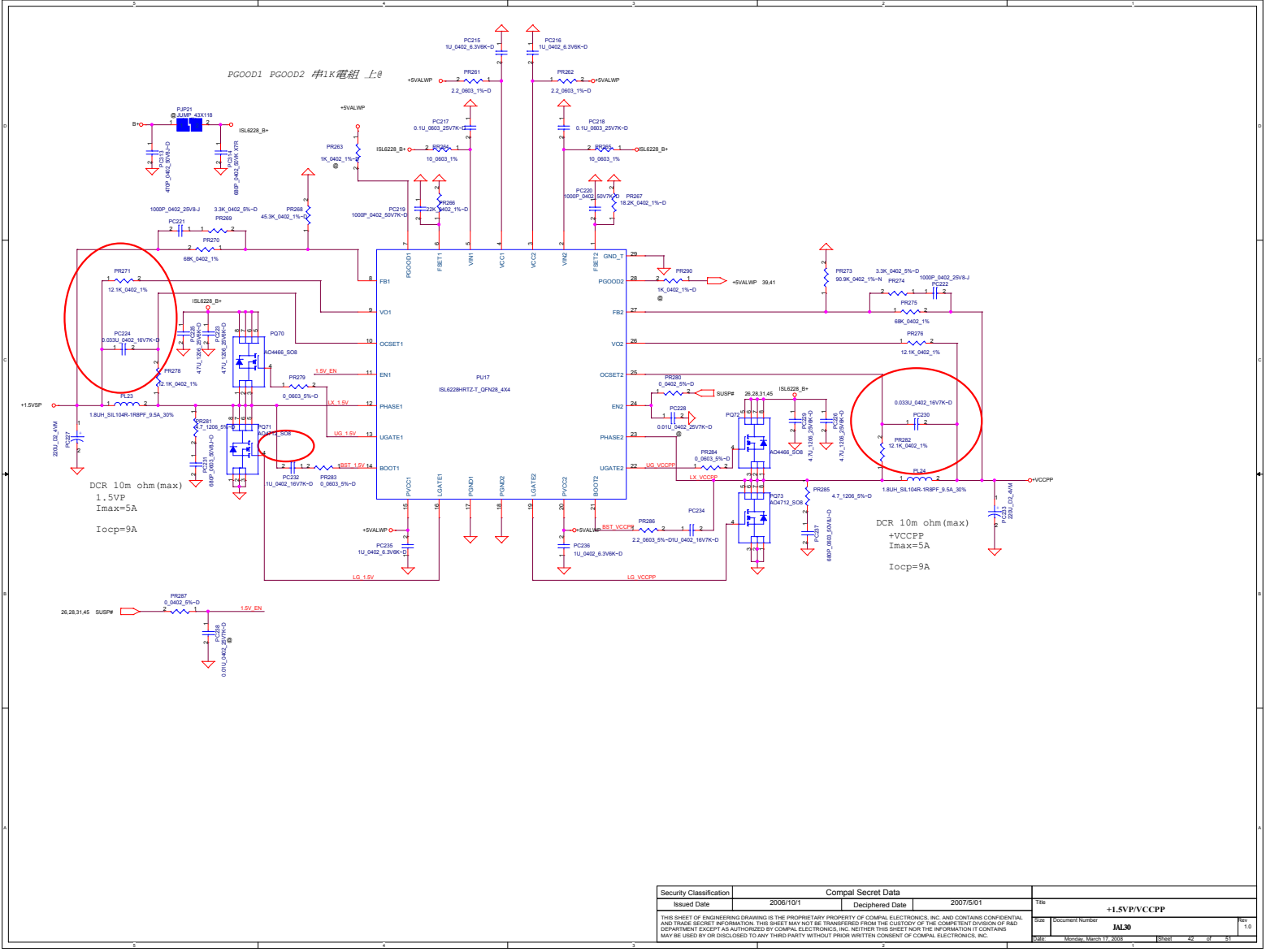

Security Classification	Compal Secret Data		
Issued Date	2006/10/1	Deciphered Date	2007/5/01

THIS SHEET OF ENGINEERING DRAWING IS THE PROPRIETARY PROPERTY OF COMPAL ELECTRONICS, INC. AND CONTAINS CONFIDENTIAL AND TRADE SECRET INFORMATION. THIS SHEET MAY NOT BE TRANSFERED FROM THE CUSTODY OF THE COMPETENT DIVISION OF R&D DEPARTMENT EXCEPT AS AUTHORIZED BY COMPAL ELECTRONICS, INC. NEITHER THIS SHEET NOR THE INFORMATION IT CONTAINS MAY BE USED BY OR DISCLOSED TO ANY THIRD PARTY WITHOUT PRIOR WRITTEN CONSENT OF COMPAL ELECTRONICS, INC.

Title: +1.5VP/VCCPP

Size: | Document Number: JAL30 | Rev: 1.0

Date: Monday, March 17, 2008 | Sheet 42 of 51

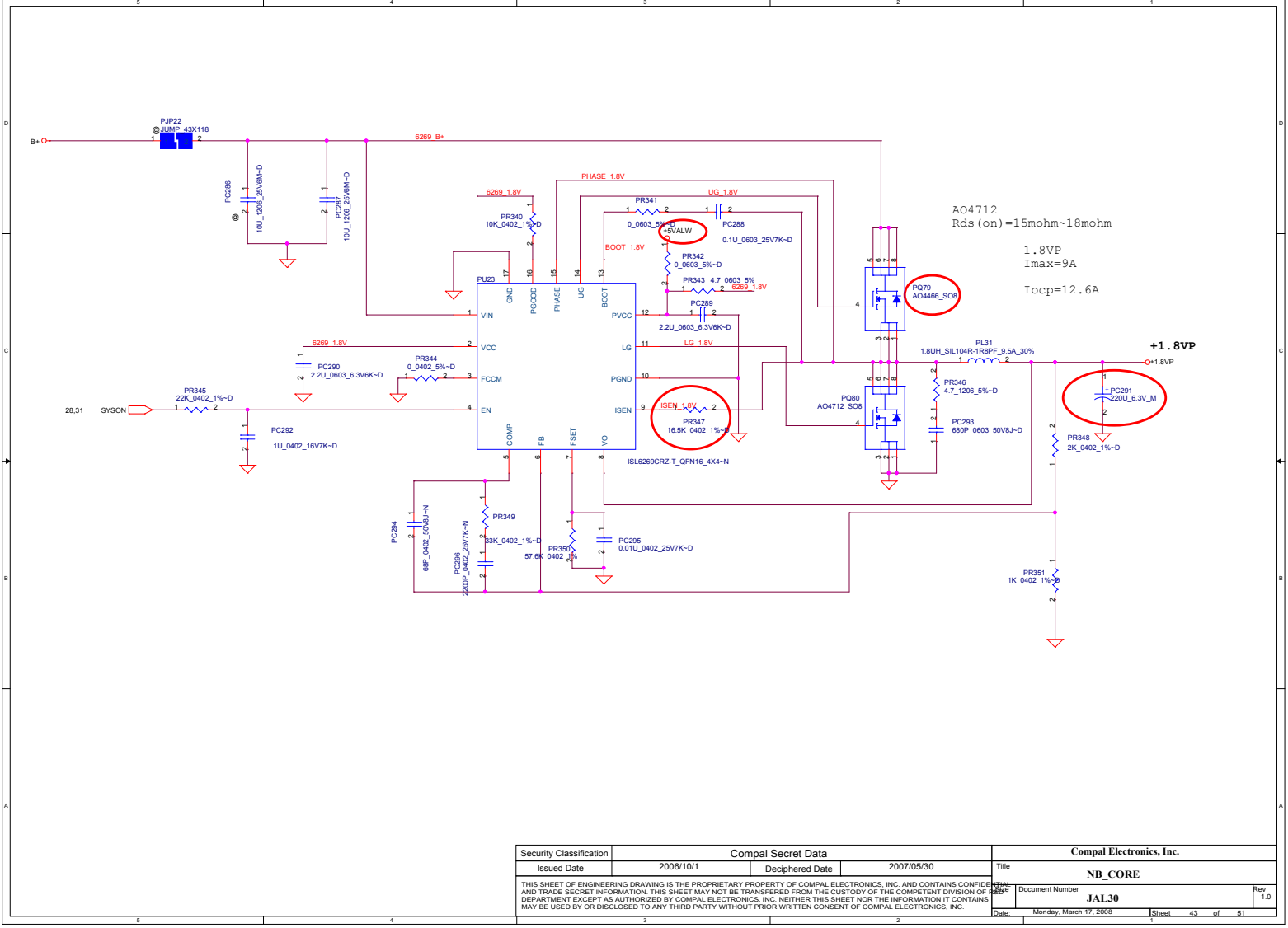

Security Classification	Compal Secret Data			Compal Electronics, Inc.
Issued Date	2006/10/1	Deciphered Date	2007/05/30	Title: NB_CORE
THIS SHEET OF ENGINEERING DRAWING IS THE PROPRIETARY PROPERTY OF COMPAL ELECTRONICS, INC. AND CONTAINS CONFIDENTIAL AND TRADE SECRET INFORMATION. THIS SHEET MAY NOT BE TRANSFERED FROM THE CUSTODY OF THE COMPETENT DIVISION OF R&D DEPARTMENT EXCEPT AS AUTHORIZED BY COMPAL ELECTRONICS, INC. NEITHER THIS SHEET NOR THE INFORMATION IT CONTAINS MAY BE USED BY OR DISCLOSED TO ANY THIRD PARTY WITHOUT PRIOR WRITTEN CONSENT OF COMPAL ELECTRONICS, INC.				Size: Document Number: JAL30 — Rev: 1.0
				Date: Monday, March 17, 2008 — Sheet 43 of 51

GRATIS - FOR FREE
hexainf@hotmail.com

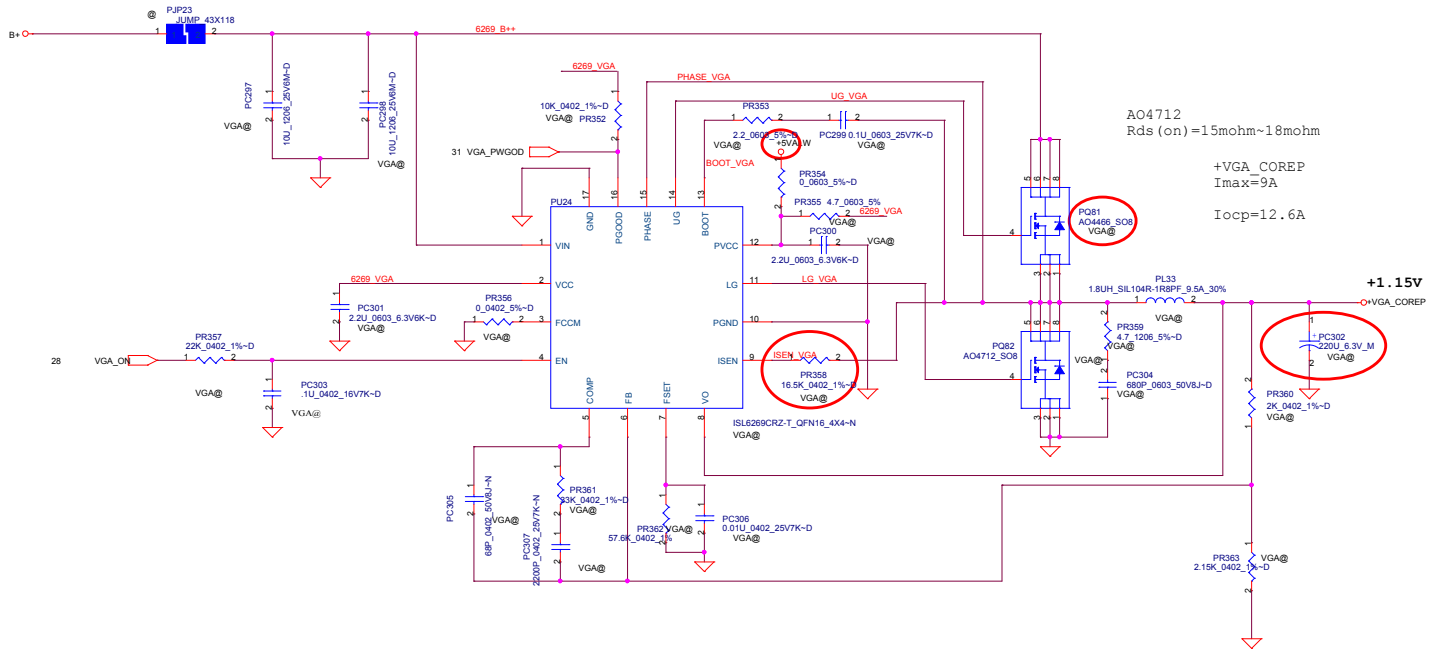

Security Classification	Compal Secret Data			Compal Electronics, Inc.
Issued Date	2006/10/1	Deciphered Date	2007/05/30	Title: +VGA_COREP

THIS SHEET OF ENGINEERING DRAWING IS THE PROPRIETARY PROPERTY OF COMPAL ELECTRONICS, INC. AND CONTAINS CONFIDENTIAL AND TRADE SECRET INFORMATION. THIS SHEET MAY NOT BE TRANSFERED FROM THE CUSTODY OF THE COMPETENT DIVISION OF R&D DEPARTMENT EXCEPT AS AUTHORIZED BY COMPAL ELECTRONICS, INC. NEITHER THIS SHEET NOR THE INFORMATION IT CONTAINS MAY BE USED BY OR DISCLOSED TO ANY THIRD PARTY WITHOUT PRIOR WRITTEN CONSENT OF COMPAL ELECTRONICS, INC.

Size	Document Number	Rev
	JAL60	1.0

Date: Monday, March 17, 2008 Sheet 44 of 51

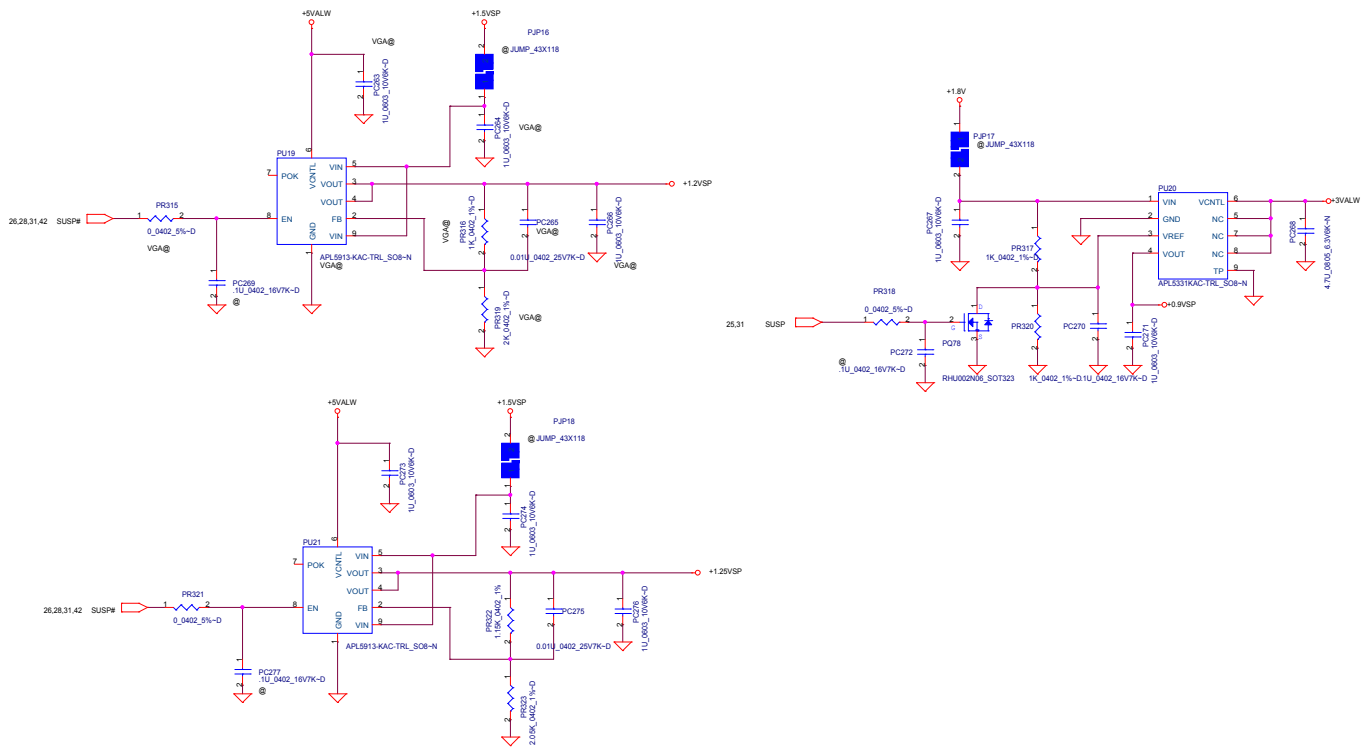

Security Classification	Compal Secret Data		
Issued Date	2005/10/1	Deciphered Date	2007/05/30

THIS SHEET OF ENGINEERING DRAWING IS THE PROPRIETARY PROPERTY OF COMPAL ELECTRONICS, INC. AND CONTAINS CONFIDENTIAL AND TRADE SECRET INFORMATION. THIS SHEET MAY NOT BE TRANSFERED FROM THE CUSTODY OF THE COMPETENT DIVISION OF R&D DEPARTMENT EXCEPT AS AUTHORIZED BY COMPAL ELECTRONICS, INC. NEITHER THIS SHEET NOR THE INFORMATION IT CONTAINS MAY BE USED BY OR DISCLOSED TO ANY THIRD PARTY WITHOUT PRIOR WRITTEN CONSENT OF COMPAL ELECTRONICS, INC.

Compal Electronics, Inc.

Title: +1.25VSP / +0.9VSP/ +1.2VSP

Size: Custom | Document Number: JAL30 | Rev: 1.0

Date: Monday, March 17, 2008 | Sheet 45 of 51

GRATIS - FOR FREE
hexainf@hotmail.com

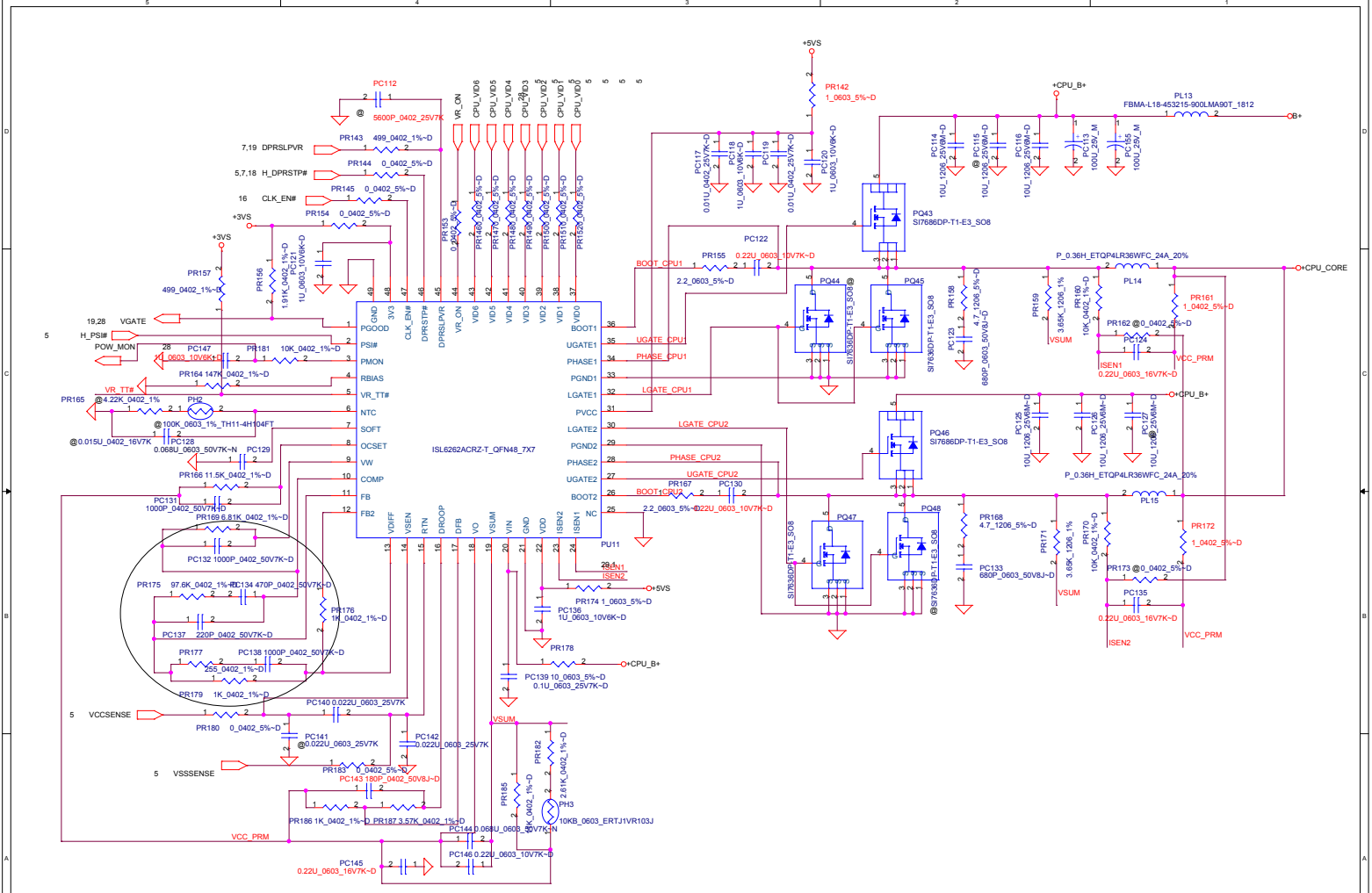

Security Classification	Compal Secret Data		
Issued Date	2007/1/15	Deciphered Date	2008/1/15

THIS SHEET OF ENGINEERING DRAWING IS THE PROPRIETARY PROPERTY OF COMPAL ELECTRONICS, INC. AND CONTAINS CONFIDENTIAL AND TRADE SECRET INFORMATION. THIS SHEET MAY NOT BE TRANSFERED FROM THE CUSTODY OF THE COMPETENT DIVISION OF R&D DEPARTMENT EXCEPT AS AUTHORIZED BY COMPAL ELECTRONICS, INC. NEITHER THIS SHEET NOR THE INFORMATION IT CONTAINS MAY BE USED BY OR DISCLOSED TO ANY THIRD PARTY WITHOUT PRIOR WRITTEN CONSENT OF COMPAL ELECTRONICS, INC.

Compal Electronics, Inc.

Title: **+CPU_CORE**

Size: Custom | Document Number: **JAL30** | Rev: 1.0

Date: Monday, March 17, 2008 | Sheet 46 of 51

Battery Connect/OTP

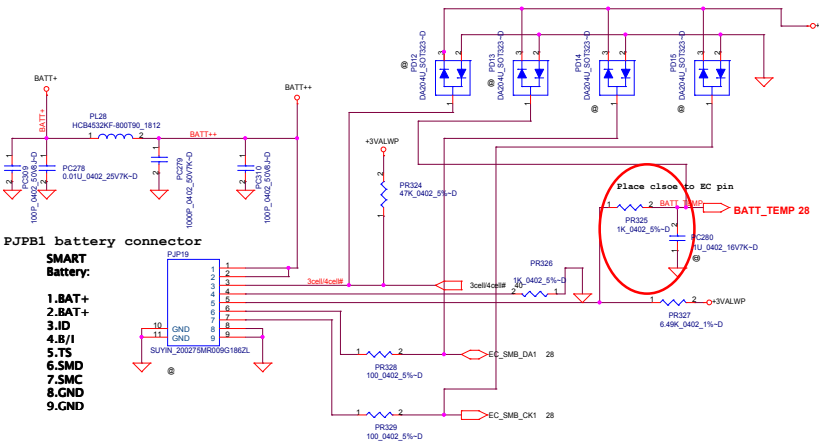

CPU

PH1 under CPU botten side :
CPU thermal protection at 90 +-3 degree C
Recovery at 50 +-3 degree C

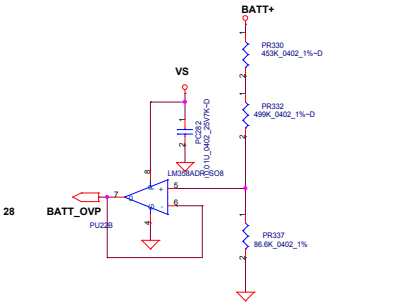

LI-3S :13.5V----BATT-OVP=1.5V
BATT-OVP=0.111*BATT+

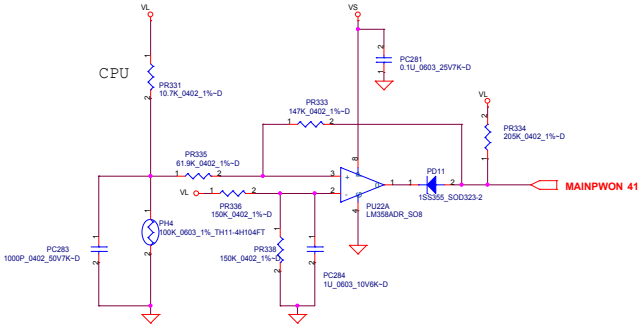

Security Classification	Compal Secret Data		
Issued Date	2005/10/1	Deciphered Date	2007/05/30

THIS SHEET OF ENGINEERING DRAWING IS THE PROPRIETARY PROPERTY OF COMPAL ELECTRONICS, INC. AND CONTAINS CONFIDENTIAL AND TRADE SECRET INFORMATION. THIS SHEET MAY NOT BE TRANSFERED FROM THE CUSTODY OF THE COMPETENT DIVISION OF R&D DEPARTMENT EXCEPT AS AUTHORIZED BY COMPAL ELECTRONICS, INC. NEITHER THIS SHEET NOR THE INFORMATION IT CONTAINS MAY BE USED BY OR DISCLOSED TO ANY THIRD PARTY WITHOUT PRIOR WRITTEN CONSENT OF COMPAL ELECTRONICS, INC.

Compal Electronics, Inc.

Title: BATTERY CONN

Size: Custom | Document Number: JAL30 | Rev: 1.0

Date: Monday, March 17, 2008 | Sheet 47 of 51

GRATIS - FOR FREE
hexainf@hotmail.com

Version Change List (P. I. R. List) Page 1/1

Item	Page #	Title	Date	Request Owner	Issue Description	Solution Description	Rev.
1	41	+3VALWP/+5VALWP	07/11/19	COMPAL	When in the DC-mode , shut down the system ,5valwp output not turn off	ADD PQ76 to turn off 5VALWP wehn shut down the system in the DC-mode	
2	40	Charge	07/11/25	COMPAL	Change RTC circuitry part	del PD16 PC285 PL29 JRTC1	
3	40	Charge	07/11/25	COMPAL	change charge voltage can to adjust	ADD PR53 PR54	
4	40	Charge	07/11/25	COMPAL	increase Coin RTC battery circuitry	ADD PD2 PR1 PC1	
5	40	Charge	07/11/25	COMPAL	increase BQ24751 Vin Detector function	increase PR232	
6	40	Charge	07/12/26	COMPAL	change charge voltage can to adjust	Change PR53 from 15K to 4.3K	
7	42	1.5VSP/+VCCPP	07/12/26	COMPAL	adjust 1.5VSP/+VCCPP OCP set	Change PR271 PR276 PR278 PR282 from 9.09K to 12.1K	
8	43	1.8VP	07/12/26	COMPAL	adjust 1.8VP OCP set	Change PR347 from 12.1K to 16.5K	
9	44	VGA_CORE	07/12/26	COMPAL	adjust VGA_CORE OCP set	Change PR358 from 12.1K to 16.5K	
10	41	+3VALWP/+5VALWP	07/12/26	COMPAL	The schematic location doesn't correspond to PCBA	Change location from PQ76 to PQ74	
11	43	1.8VP	07/12/26	COMPAL	delete resistor 0ohm for HW request	DEL PR342	
12	44	VGA_CORE	07/12/26	COMPAL	delete resistor 0ohm for HW request	DEL PR354	
13	46	CPU_CORE	07/12/26	COMPAL	modify MOS type SO8 to Power Pack for height limit	DEL PQ44 PQ48	
14	43	1.8VP	08/01/04	COMPAL	In order to replace IC for system request	ADD PU23 PR342	
15	44	VGA_CORE	08/01/04	COMPAL	In order to replace IC for system request	ADD PU24 PR354	
16	41	+3VALWP/+5VALWP	08/01/04	COMPAL	When in the DC-mode , shut down the system ,5valwp output not turn off	ADD PD16 to turn off 5VALWP wehn shut down the system in the DC-mode	
17	40	Charge	08/01/04	COMPAL	adjust battery charge voltage set	CHANGE PR53 from 15K to 4.3K	
18	40	Charge	08/01/04	COMPAL	VIN Detector has the same function	DEL PR230 PQ62	
19							
20			08/01/04	COMPAL	Increase Resistor on charge boot for EMI request	CHANGE PR220 PR286from 0 to 2.2 ohm	
21			08/01/04	COMPAL	Increase Capacitor on charge boot for EMI request	ADD PC123 PC133 PC231 PC237 PC309 PC310 PC311 PC313 PC312 PC314 PC293	
22			08/01/04	COMPAL	Increase Resistor on charge boot for EMI request	ADD PR158 PR168 PR285 PR281 PR346	
23			08/01/04	COMPAL	Increase Bead on charge boot for EMI request	ADD PL17 PL28	
24							
25							
26							
27							
28							
29							
30							
31							
32							

Security Classification	Compal Secret Data		
Issued Date	2007/1/15	Deciphered Date	2008/1/15

THIS SHEET OF ENGINEERING DRAWING IS THE PROPRIETARY PROPERTY OF COMPAL ELECTRONICS, INC. AND CONTAINS CONFIDENTIAL AND TRADE SECRET INFORMATION. THIS SHEET MAY NOT BE TRANSFERED FROM THE CUSTODY OF THE COMPETENT DIVISION OF R&D DEPARTMENT EXCEPT AS AUTHORIZED BY COMPAL ELECTRONICS, INC. NEITHER THIS SHEET NOR THE INFORMATION IT CONTAINS MAY BE USED BY OR DISCLOSED TO ANY THIRD PARTY WITHOUT PRIOR WRITTEN CONSENT OF COMPAL ELECTRONICS, INC.

Compal Electronics, Inc.

Title: PW PIR-1

Size: Custom | Document Number: LA-3682P | Rev: 1.0

Date: Monday, March 17, 2008 | Sheet 48 of 51

Version Change List (P. I. R. List)

Item	Page #	Title	Date	Request Owner	Issue Description	Solution Description	Rev.
1	25	OZ129_Card Reader/1394	07/10/30	compal	CardBus vendor change	CardBus R5C833 change to OZ129	0.3
2	28	EC KB926/REED SW/TPM1.2	07/10/30	compal	Change pull up resistance	Change EC pin17,18 pull up to 4.7Kohm	0.3
3	28	EC KB926/REED SW/TPM1.2	07/10/30	compal	Need pull up	NET MIC_DIAG pull up R to 10Kohm 3VS	0.3
4	13,14	DDR2 SODIMM-I,II Socket	07/10/30	compal	Change Capacitance	Change C84,C189 to SGA00002680 330U	0.3
5	28	EC KB926/REED SW/TPM1.2	07/10/30	compal	EC update rev	EC change to 926C	0.3
6	31	DC/DC Interface	07/10/30	compal	Need pull down	SYSON pull down 10K ohm	0.3
7	31	DC/DC Interface	07/11/12	compal	Delete	Remove SIM card connector	0.3
8	15	CRT Conn.& LCD Conn.	07/11/16	compal	Add LCD control pin	Add LCD control pin LCD_DET# & LCD_TST & LCD_VCC_TEST_EN	0.3
9	30	USB/ BT/ FP/ Felica/Camera	07/11/22	compal	support wake up by USB key	change U32, U33 from 3VS to 3VALW	0.3
10	28	EC KB926/REED SW/TPM1.2	08/01/07	compal	Change for quick-set function	ADD W_DISABLE#, WL_DIS#, BT_DIS#	0.4
11	29	PWR_OK/ BTN/ KB / TouchPad	08/01/08	compal	Add Bead for EMI from function board	ADD L93, L94 FOR ESB_DAT, ESB_CLK	1.0
12	25	OZ129_Card Reader/1394	08/02/25	compal	For MS can't access after reboot	ADD Q82, R932, DELETE C335 FOR CARD READER	1.0
13	27	Mini Card/WLAN/WWAN/Robson	08/02/27	customer	remove Robson & felica function	Delete JMINI3 & JFE1	1.0
14							
15							
16							
17							
18							
19							
20							
21							
22							
23							
24							
25							
26							
27							
28							
29							
30							
31							
32							

Security Classification	Compal Secret Data		
Issued Date	2007/1/15	Deciphered Date	2008/1/15

THIS SHEET OF ENGINEERING DRAWING IS THE PROPRIETARY PROPERTY OF COMPAL ELECTRONICS, INC. AND CONTAINS CONFIDENTIAL AND TRADE SECRET INFORMATION. THIS SHEET MAY NOT BE TRANSFERED FROM THE CUSTODY OF THE COMPETENT DIVISION OF R&D DEPARTMENT EXCEPT AS AUTHORIZED BY COMPAL ELECTRONICS, INC. NEITHER THIS SHEET NOR THE INFORMATION IT CONTAINS MAY BE USED BY OR DISCLOSED TO ANY THIRD PARTY WITHOUT PRIOR WRITTEN CONSENT OF COMPAL ELECTRONICS, INC.

Compal Electronics, Inc.

Title: EE PIR-1

Size: Custom | Document Number: LA-4231P | Rev: 1.0

Date: Monday, March 17, 2008 | Sheet 49 of 51

GRATIS - FOR FREE
hexainf@hotmail.com

JAL30 Power Bock

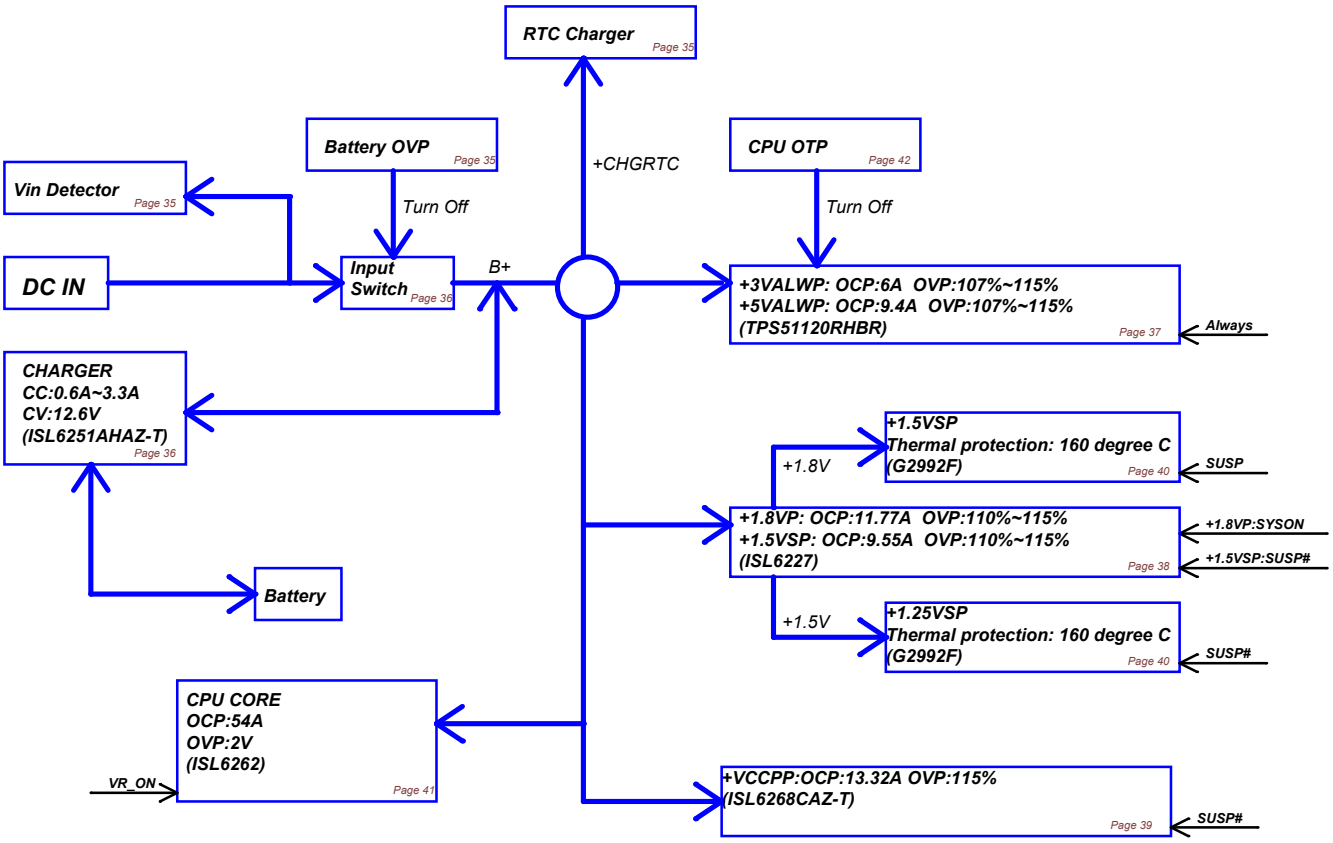

Security Classification	Compal Secret Data		
Issued Date	2007/1/15	Deciphered Date	2008/1/15

THIS SHEET OF ENGINEERING DRAWING IS THE PROPRIETARY PROPERTY OF COMPAL ELECTRONICS, INC. AND CONTAINS CONFIDENTIAL AND TRADE SECRET INFORMATION. THIS SHEET MAY NOT BE TRANSFERED FROM THE CUSTODY OF THE COMPETENT DIVISION OF R&D DEPARTMENT EXCEPT AS AUTHORIZED BY COMPAL ELECTRONICS, INC. NEITHER THIS SHEET NOR THE INFORMATION IT CONTAINS MAY BE USED BY OR DISCLOSED TO ANY THIRD PARTY WITHOUT PRIOR WRITTEN CONSENT OF COMPAL ELECTRONICS, INC.

Compal Electronics, Inc.

Title: Power Block

Size: Custom | Document Number: LA-4121P | Rev: 1.0

Date: Monday, March 17, 2008 | Sheet 50 of 51

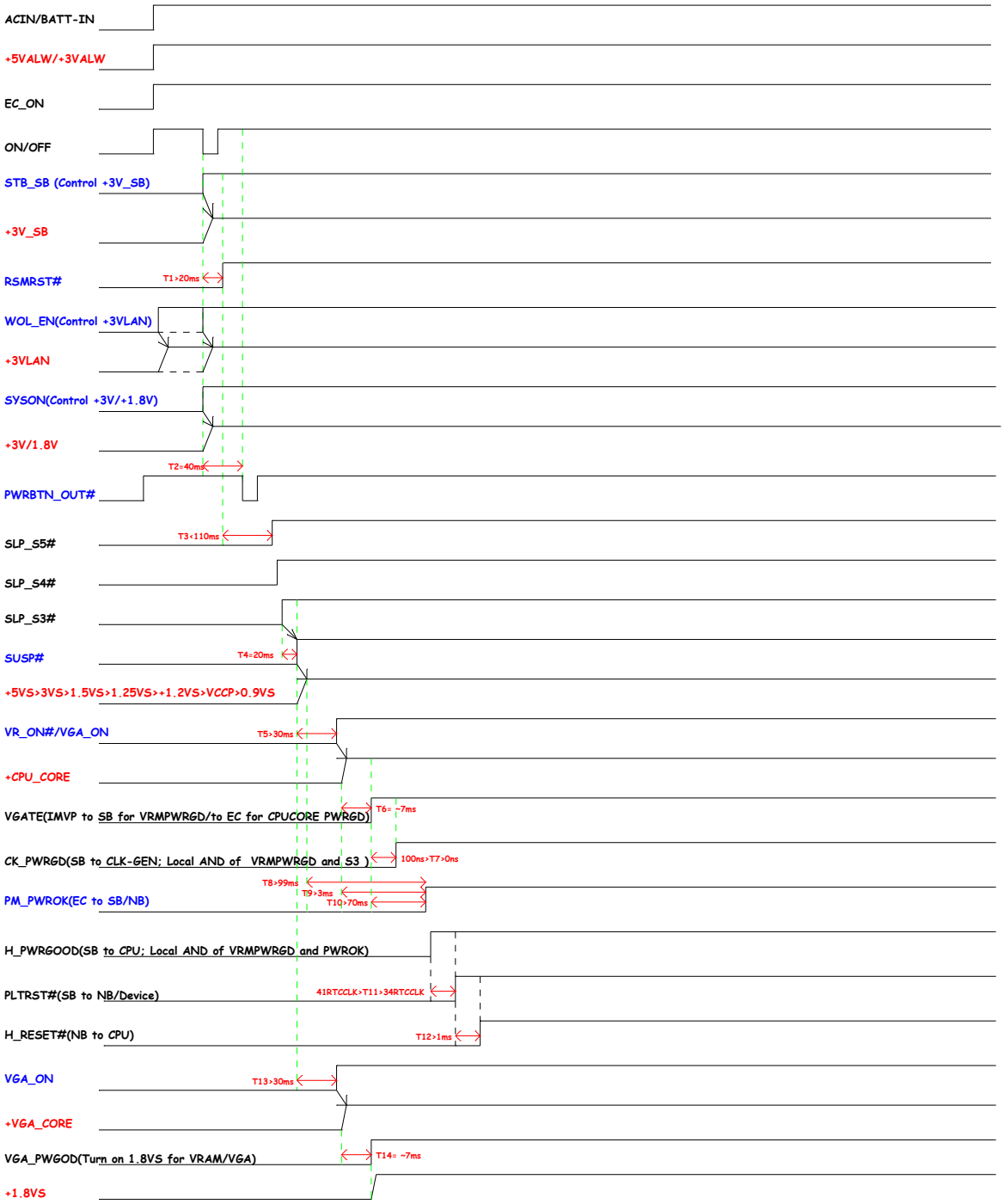

Security Classification	Compal Secret Data			Compal Electronics, Inc.
Issued Date	2007/1/15	Deciphered Date	2008/1/15	Title: Power On Sequence
THIS SHEET OF ENGINEERING DRAWING IS THE PROPRIETARY PROPERTY OF COMPAL ELECTRONICS, INC. AND CONTAINS CONFIDENTIAL AND TRADE SECRET INFORMATION. THIS SHEET MAY NOT BE TRANSFERED FROM THE CUSTODY OF THE COMPETENT DIVISION OF R&D EXCEPT AS AUTHORIZED BY COMPAL ELECTRONICS, INC. NEITHER THIS SHEET NOR THE INFORMATION IT CONTAINS MAY BE USED BY OR DISCLOSED TO ANY THIRD PARTY WITHOUT PRIOR WRITTEN CONSENT OF COMPAL ELECTRONICS, INC.				Size: Document Number: LA-4121P; Custom; Rev: 1.0
				Date: Monday, March 17, 2008; Sheet 51 of 59

GRATIS - FOR FREE
hexainf@hotmail.com