ZZZ
DA80000LX10
PCB

Compal Confidential

PBJ30 Schematics Document

Nvdia(T20) + DDRII

2011-04-12

REV: 1.0 (PVT)

Security Classification	Compal Secret Data			Compal Electronics, Inc.
Issued Date	2011/4/1	Deciphered Date	2008/09/20	Title: Cover Page
				Size: C / Document Number: LA-7251P / Rev: 1.0
				Date: Tuesday, April 12, 2011 / Sheet 1 of 34

THIS SHEET OF ENGINEERING DRAWING IS THE PROPRIETARY PROPERTY OF COMPAL ELECTRONICS, INC. AND CONTAINS CONFIDENTIAL AND TRADE SECRET INFORMATION. THIS SHEET MAY NOT BE TRANSFERED FROM THE CUSTODY OF THE COMPETENT DIVISION OF R&D DEPARTMENT EXCEPT AS AUTHORIZED BY COMPAL ELECTRONICS, INC. NEITHER THIS SHEET NOR THE INFORMATION IT CONTAINS MAY BE USED BY OR DISCLOSED TO ANY THIRD PARTY WITHOUT PRIOR WRITTEN CONSENT OF COMPAL ELECTRONICS, INC.

NVIDIA Tegra250(T20) System Block Diagram
Van Gogh(PBJ30)

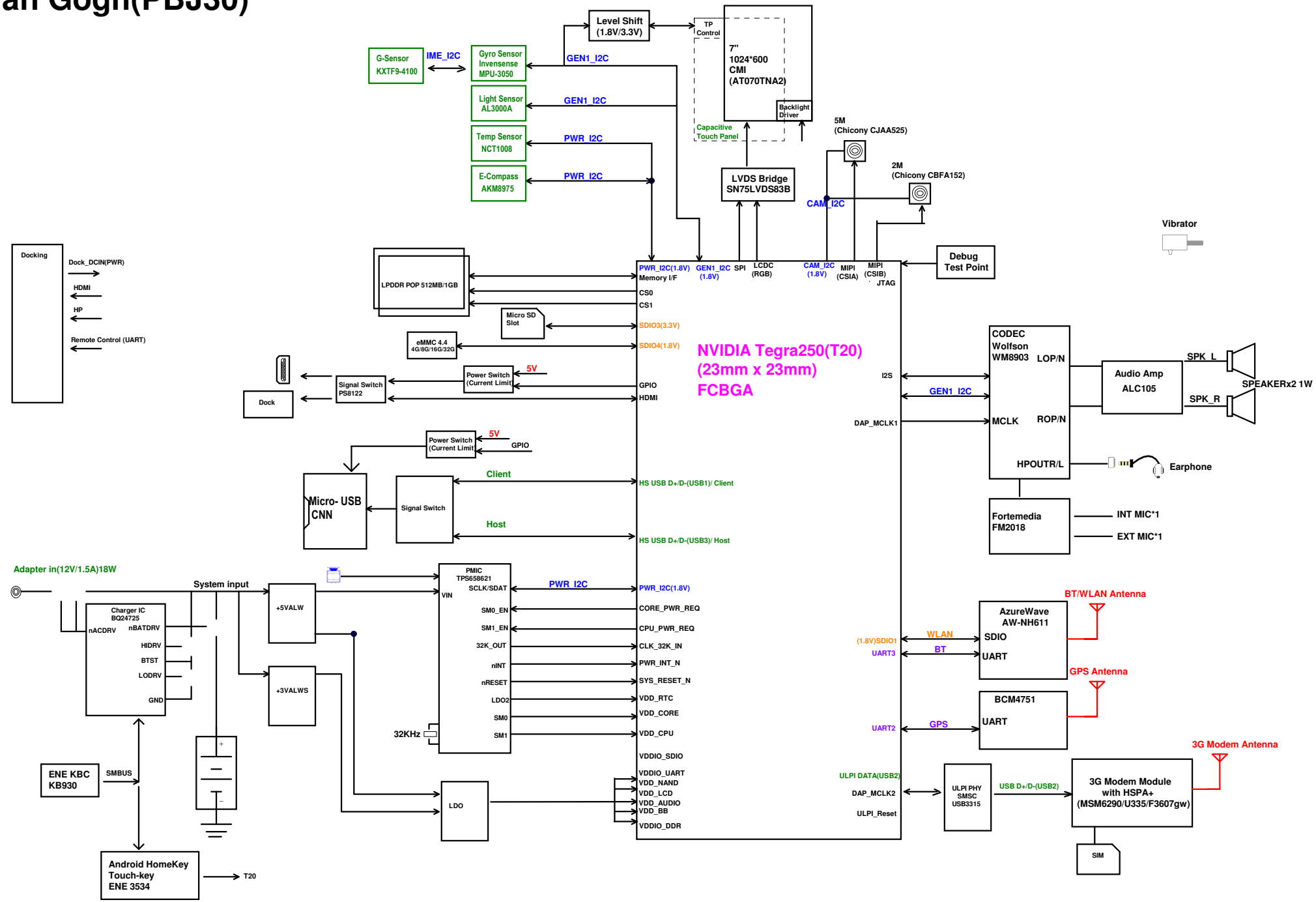

Voltage Rails

Power Plane	Description
VIN	Adapter power supply (19V)
B+	AC or battery power rail for power circuit.
+1.2VS_SM0	Core voltage for CPU
+1.0VS_SM1	CPU voltage for CPU
+1.1VS_LDO1	AVDD_PLL power rail
+1.2VS_LDO2	T20 RTC power rail
+1.8VS_LDO4	T20 system power rail
+3.3VS_LDO3	T20 USB power rail
+2.85VS_LDO5	Core voltage for EMMC
+2.85VS_LDO6	Core voltage for CAMERA
+3.3VS_LDO7	T20 HDMI power rail
+1.8VS_LDO8	T20 HDMI PLL power rail
+2.85VS_LDO9	T20 DDR RX power rail
+3VALW	3.3V always on power rail
+3VS	3.3V switched power rail for standby mode
+5VALW	5V always on power rail
+1.8VS	1.8V always on power rail
+1.8VS_S3	1.8V switched power rail for standby mode
+3.3VS_RTC	RTC power

PWR_I2C address

Device	Address
PMU	0110 100x b
e-Compass	0001 100x b
Temperature sensor	1001 100x b

CAM_I2C address

Device	Address
Camera 5M	0111 101x b
Camera 2M	0111 100x b
LED Flash	0110 011x b

GEN1_I2C

Device	Address
Audio Codec	0011 010x b
Light sensor	0011 100x b
Gyro	1101 000x b
G-sensor	0001 111x b
Touch-Pad	1100 111x b

TS_I2C

Device	Address

GEN2_I2C

Device	Address
EC	1011 000x b

AP_SMB

Device	Address

EC_SMB

Device	Address
Echo Cancellation	1100 000x b

IME_I2C

Device	Address

DDC_I2C

HDMI_DDC_I2C

Device	Address

THIS SHEET OF ENGINEERING DRAWING IS THE PROPRIETARY PROPERTY OF COMPAL ELECTRONICS, INC. AND CONTAINS CONFIDENTIAL AND TRADE SECRET INFORMATION. THIS SHEET MAY NOT BE TRANSFERED FROM THE CUSTODY OF THE COMPETENT DIVISION OF R&D DEPARTMENT EXCEPT AS AUTHORIZED BY COMPAL ELECTRONICS, INC. NEITHER THIS SHEET NOR THE INFORMATION IT CONTAINS MAY BE USED BY OR DISCLOSED TO ANY THIRD PARTY WITHOUT PRIOR WRITTEN CONSENT OF COMPAL ELECTRONICS, INC.

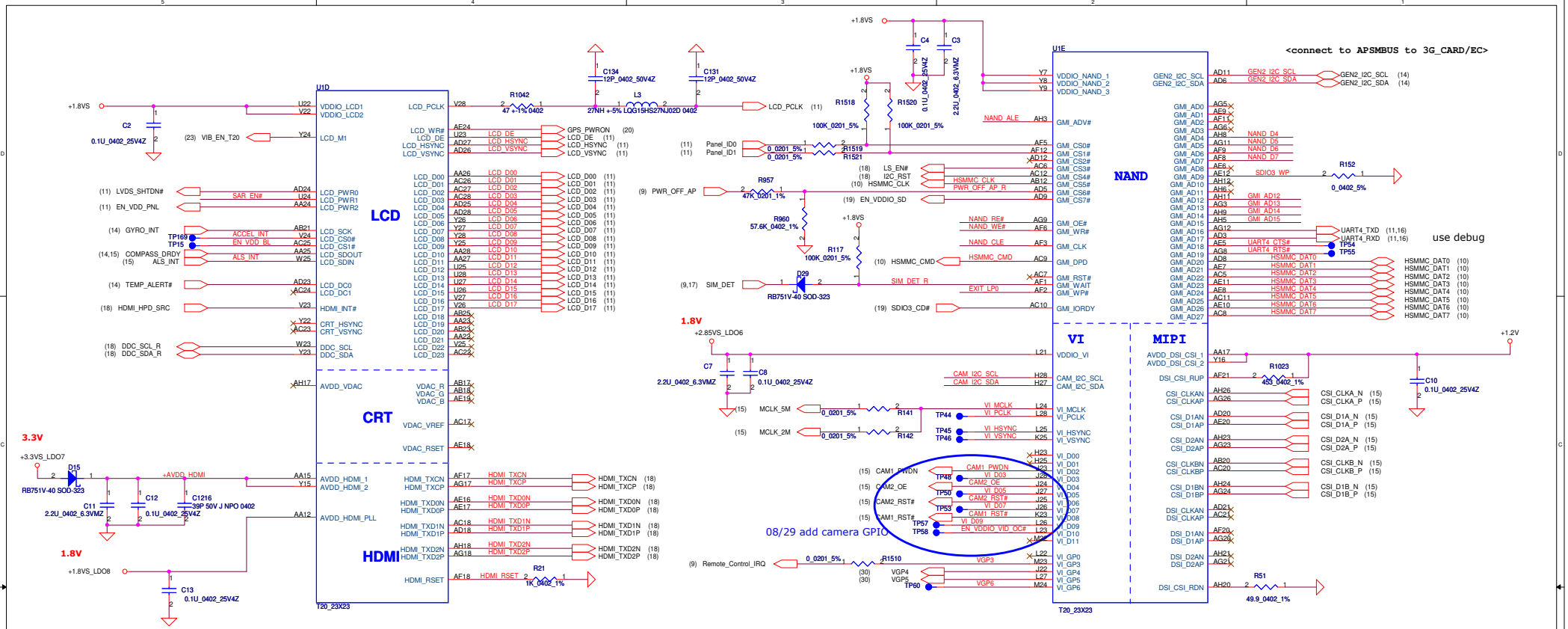

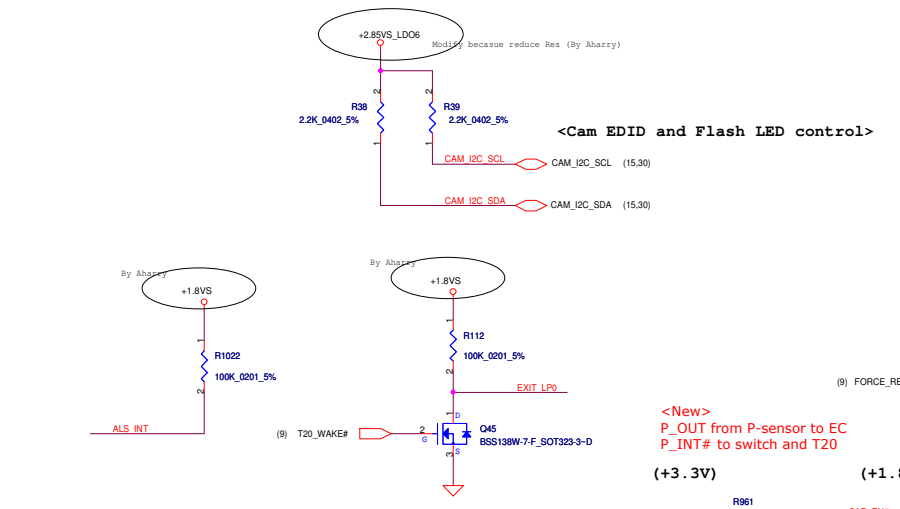

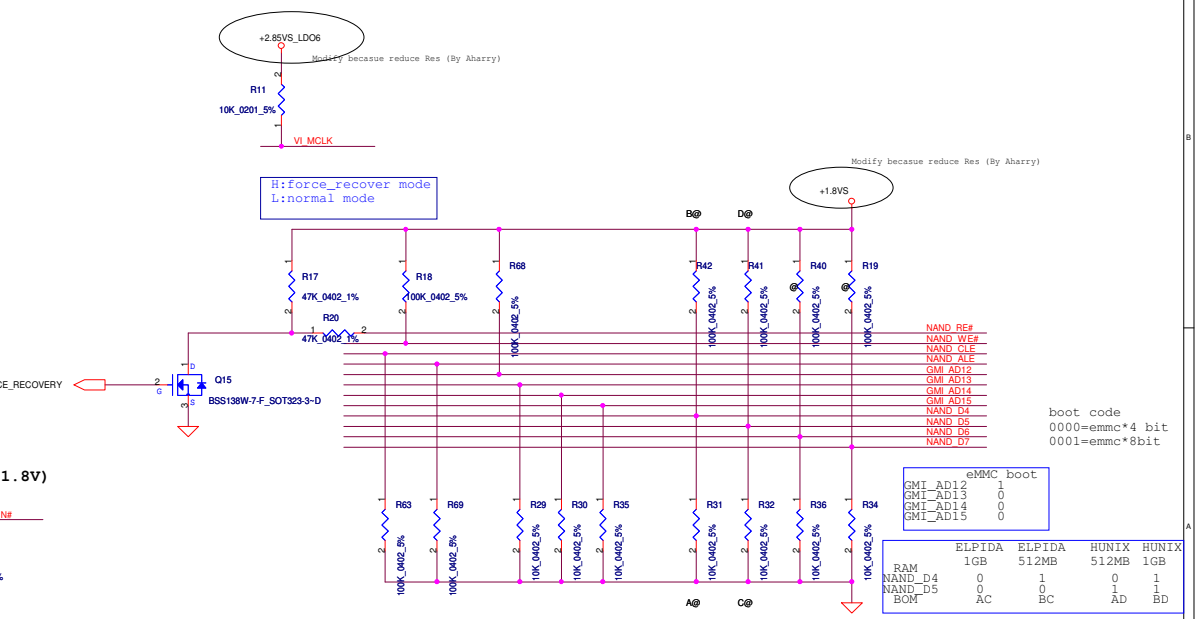

Name	Active
T20_WAKE#	low
EXIT_LP0	High

Security Classification	Compal Secret Data		
Issued Date	2011/4/1	Deciphered Date	2008/09/20

THIS SHEET OF ENGINEERING DRAWING IS THE PROPRIETARY PROPERTY OF COMPAL ELECTRONICS, INC. AND CONTAINS CONFIDENTIAL AND TRADE SECRET INFORMATION. THIS SHEET MAY NOT BE TRANSFERED FROM THE CUSTODY OF THE COMPETENT DIVISION OF R&D DEPARTMENT EXCEPT AS AUTHORIZED BY COMPAL ELECTRONICS, INC. NEITHER THIS SHEET NOR THE INFORMATION IT CONTAINS MAY BE USED BY OR DISCLOSED TO ANY THIRD PARTY WITHOUT PRIOR WRITTEN CONSENT OF COMPAL ELECTRONICS, INC.

Compal Electronics, Inc.

Title: **T20(1/4)LCD/CRT/HDMI/NAND**

Size: C | Document Number: **LA-7251P** | Rev: 1.0

Date: Tuesday, April 12, 2011 | Sheet 4 of 34

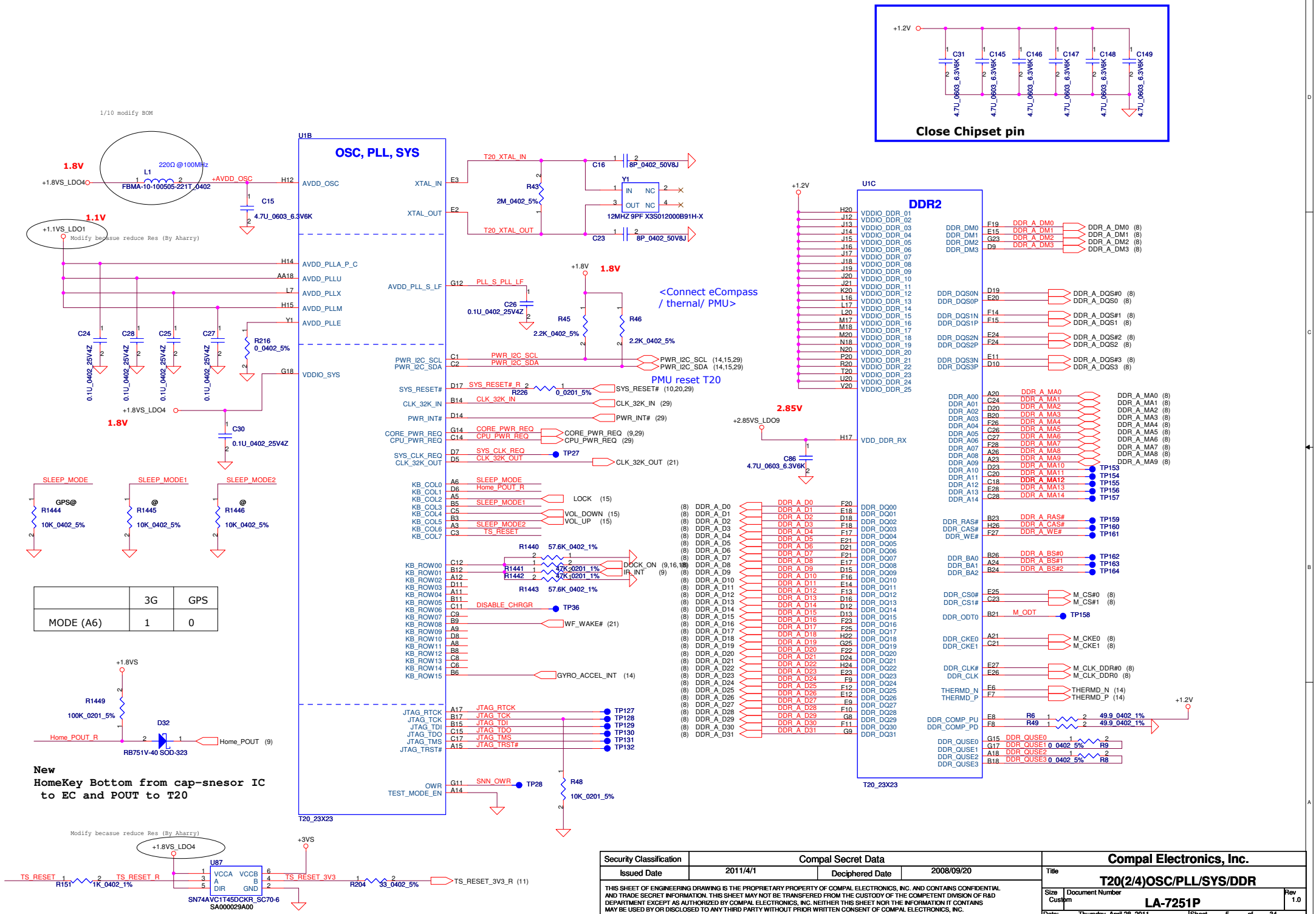

	3G	GPS
MODE (A6)	1	0

Security Classification	Compal Secret Data		
Issued Date	2011/4/1	Deciphered Date	2008/09/20

THIS SHEET OF ENGINEERING DRAWING IS THE PROPRIETARY PROPERTY OF COMPAL ELECTRONICS, INC. AND CONTAINS CONFIDENTIAL AND TRADE SECRET INFORMATION. THIS SHEET MAY NOT BE TRANSFERED FROM THE CUSTODY OF THE COMPETENT DIVISION OF R&D DEPARTMENT EXCEPT AS AUTHORIZED BY COMPAL ELECTRONICS, INC. NEITHER THIS SHEET NOR THE INFORMATION IT CONTAINS MAY BE USED BY OR DISCLOSED TO ANY THIRD PARTY WITHOUT PRIOR WRITTEN CONSENT OF COMPAL ELECTRONICS, INC.

Compal Electronics, Inc.

Title: **T20(2/4)OSC/PLL/SYS/DDR**

Size: Custom | Document Number: **LA-7251P** | Rev: 1.0

Date: Thursday, April 28, 2011 | Sheet 5 of 34

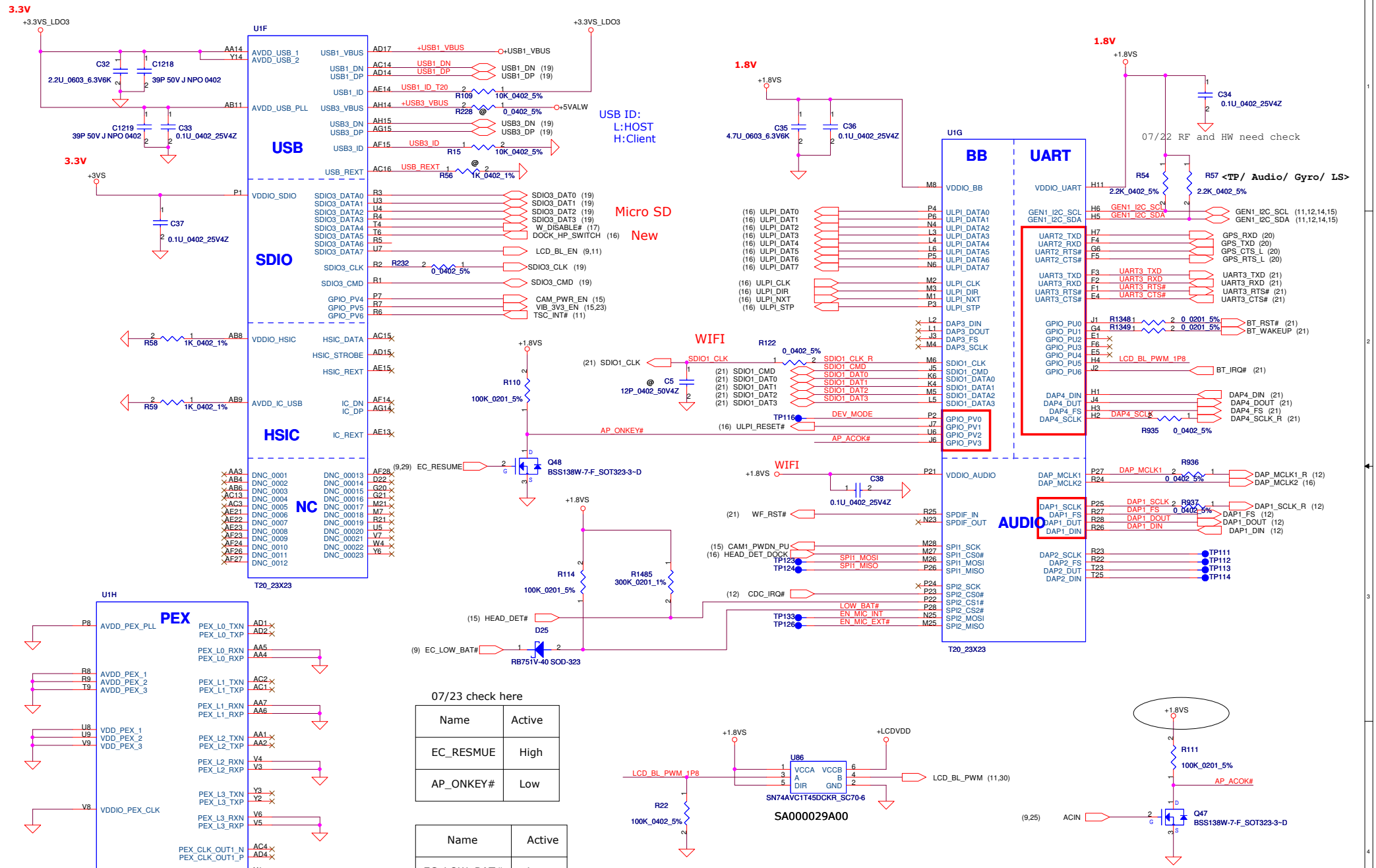

07/23 check here

Name	Active
EC_RESMUE	High
AP_ONKEY#	Low

Name	Active
EC_LOW_BAT#	Low
LOW_BAT#	Low

Security Classification	Compal Secret Data		
Issued Date	2011/4/1	Deciphered Date	2008/09/20

THIS SHEET OF ENGINEERING DRAWING IS THE PROPRIETARY PROPERTY OF COMPAL ELECTRONICS, INC. AND CONTAINS CONFIDENTIAL AND TRADE SECRET INFORMATION. THIS SHEET MAY NOT BE TRANSFERED FROM THE CUSTODY OF THE COMPETENT DIVISION OF R&D DEPARTMENT EXCEPT AS AUTHORIZED BY COMPAL ELECTRONICS, INC. NEITHER THIS SHEET NOR THE INFORMATION IT CONTAINS MAY BE USED BY OR DISCLOSED TO ANY THIRD PARTY WITHOUT PRIOR WRITTEN CONSENT OF COMPAL ELECTRONICS, INC.

Compal Electronics, Inc.

Title: **T20(3/4)USB/SDIO/UART/AUDIO**

Size: Custom | Document Number: **LA-7251P** | Rev: 1.0

Date: Tuesday, April 12, 2011 | Sheet 6 of 34

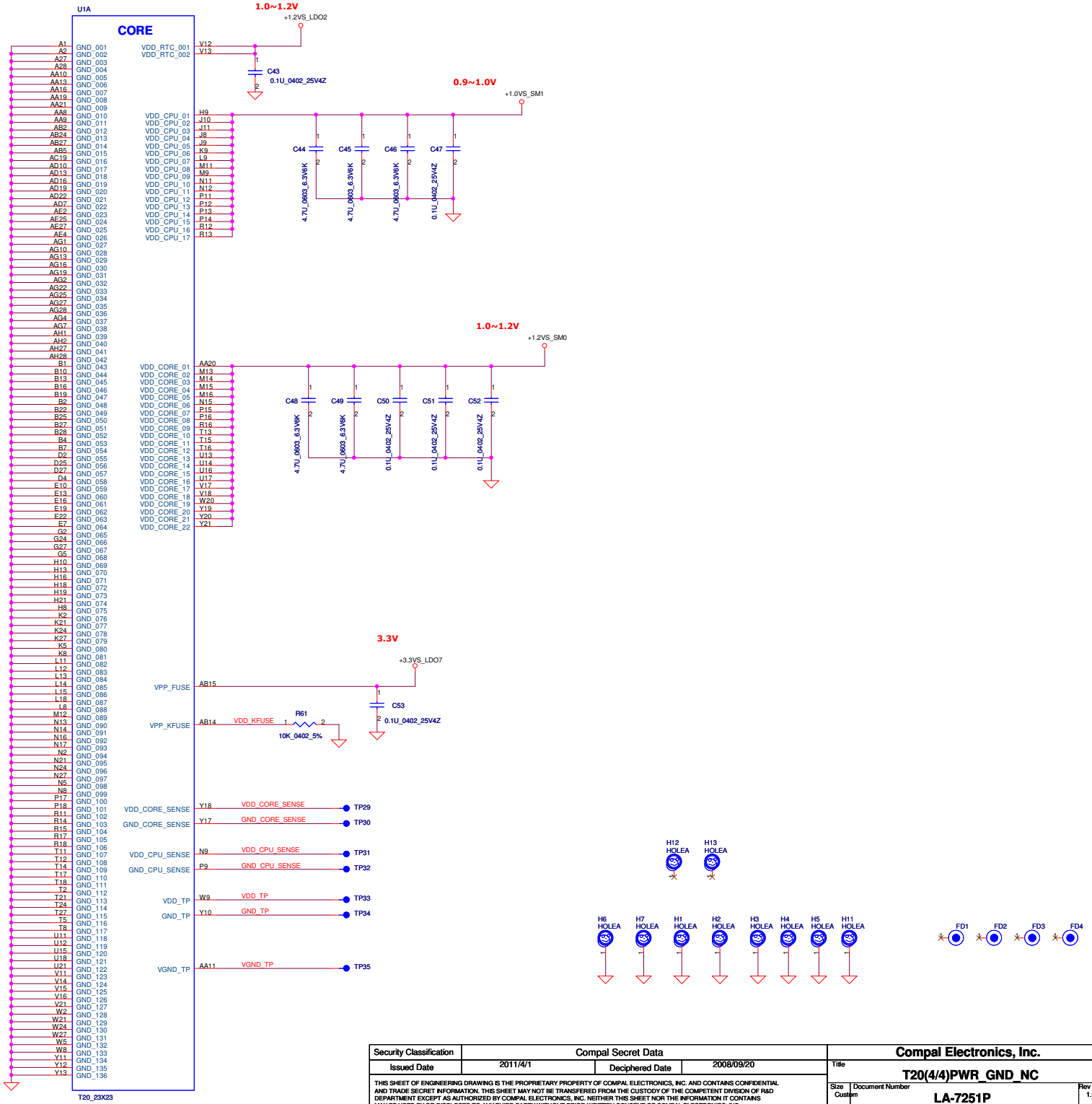

Security Classification	Compal Secret Data		
Issued Date	2011/4/1	Deciphered Date	2008/09/20

THIS SHEET OF ENGINEERING DRAWING IS THE PROPRIETARY PROPERTY OF COMPAL ELECTRONICS, INC. AND CONTAINS CONFIDENTIAL AND TRADE SECRET INFORMATION. THIS SHEET MAY NOT BE TRANSFERED FROM THE CUSTODY OF THE COMPETENT DIVISION OF R&D DEPARTMENT EXCEPT AS AUTHORIZED BY COMPAL ELECTRONICS, INC. NEITHER THIS SHEET NOR THE INFORMATION IT CONTAINS MAY BE USED BY OR DISCLOSED TO ANY THIRD PARTY WITHOUT PRIOR WRITTEN CONSENT OF COMPAL ELECTRONICS, INC.

Compal Electronics, Inc.

Title: **T20(4/4)PWR_GND_NC**

Size	Document Number	Rev
Custom	LA-7251P	1.0

Date: Tuesday, April 12, 2011 | Sheet 7 of 34

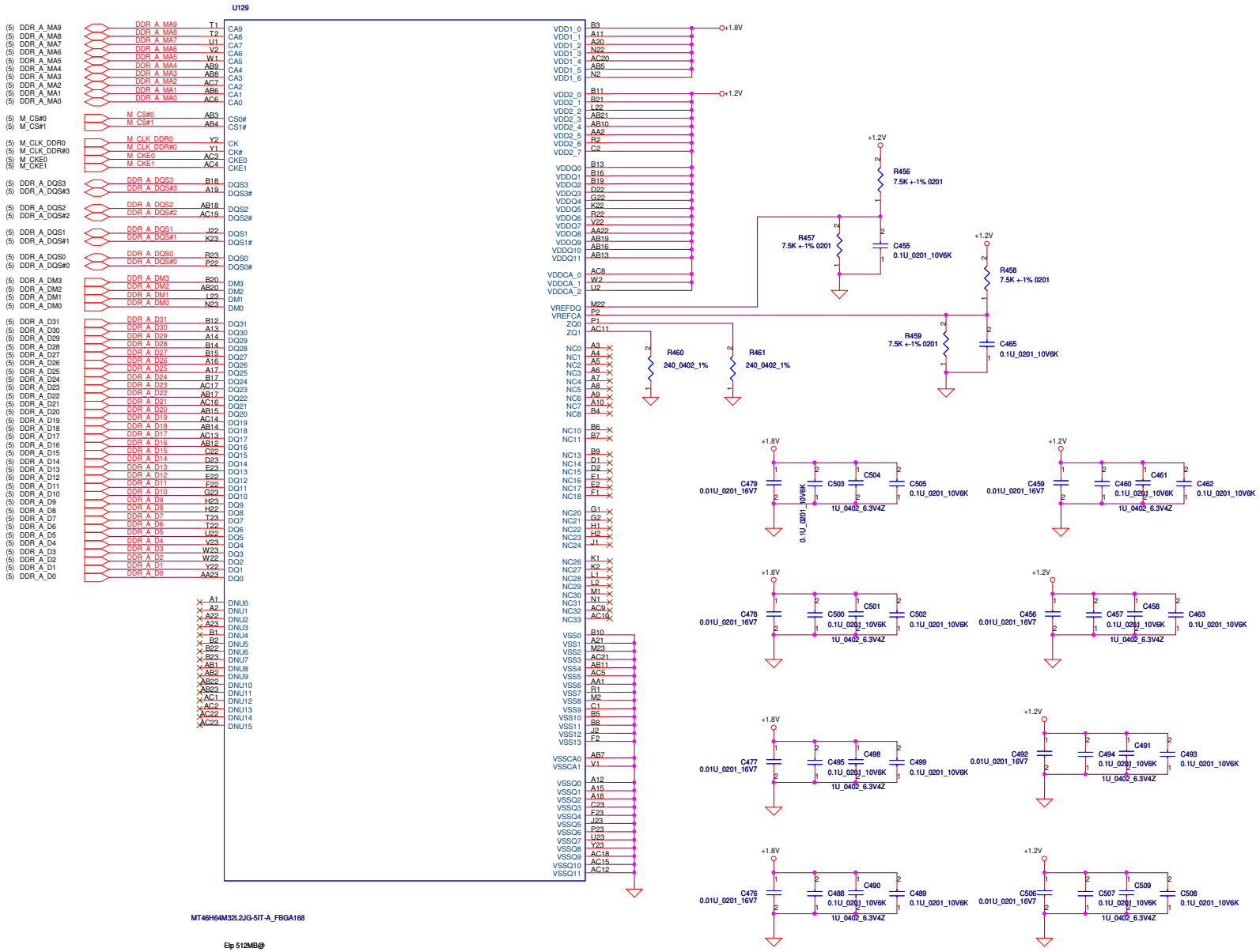

U129 Hyn 512MB@ SA00004JD10 (512MB Hynix)

U129 Elp 1G@ SA000048Q20 (1G Elpida)

U129 Hyn 1G@ SA00004MJ00 (1G Hynix)

Security Classification	Compal Secret Data			Compal Electronics, Inc.
Issued Date	2011/4/1	Deciphered Date	2008/09/20	Title: DDRII-DEVICE DOWN(1/2)
				Size: C; Document Number: LA-7251P; Rev: 1.0
				Date: Tuesday, April 12, 2011; Sheet 8 of 34

THIS SHEET OF ENGINEERING DRAWING IS THE PROPRIETARY PROPERTY OF COMPAL ELECTRONICS, INC. AND CONTAINS CONFIDENTIAL AND TRADE SECRET INFORMATION. THIS SHEET MAY NOT BE TRANSFERED FROM THE CUSTODY OF THE COMPETENT DIVISION OF R&D DEPARTMENT EXCEPT AS AUTHORIZED BY COMPAL ELECTRONICS, INC. NEITHER THIS SHEET NOR THE INFORMATION IT CONTAINS MAY BE USED BY OR DISCLOSED TO ANY THIRD PARTY WITHOUT PRIOR WRITTEN CONSENT OF COMPAL ELECTRONICS, INC.

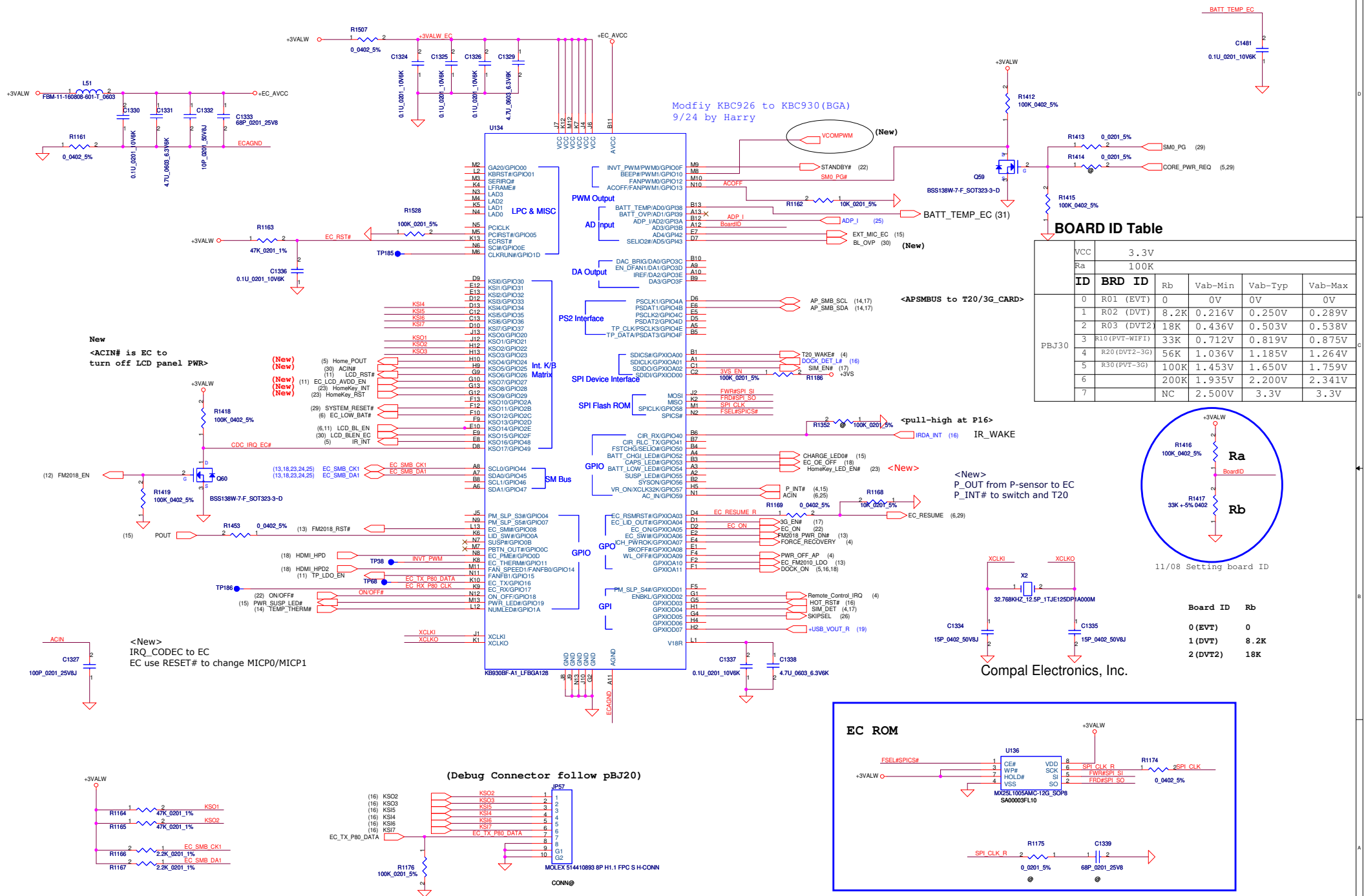

Security Classification	Compal Secret Data			Compal Electronics, Inc.
Issued Date	2011/4/1	Deciphered Date	2008/09/20	Title: ENE/BIOS
				Size: Custom; Document Number: LA-7251P; Rev: 1.0
				Date: Tuesday, April 12, 2011; Sheet 9 of 34

THIS SHEET OF ENGINEERING DRAWING IS THE PROPRIETARY PROPERTY OF COMPAL ELECTRONICS, INC. AND CONTAINS CONFIDENTIAL AND TRADE SECRET INFORMATION. THIS SHEET MAY NOT BE TRANSFERRED FROM THE CUSTODY OF THE COMPETENT DIVISION OF R&D DEPARTMENT EXCEPT AS AUTHORIZED BY COMPAL ELECTRONICS, INC. NEITHER THIS SHEET NOR THE INFORMATION IT CONTAINS MAY BE USED BY OR DISCLOSED TO ANY THIRD PARTY WITHOUT PRIOR WRITTEN CONSENT OF COMPAL ELECTRONICS, INC.

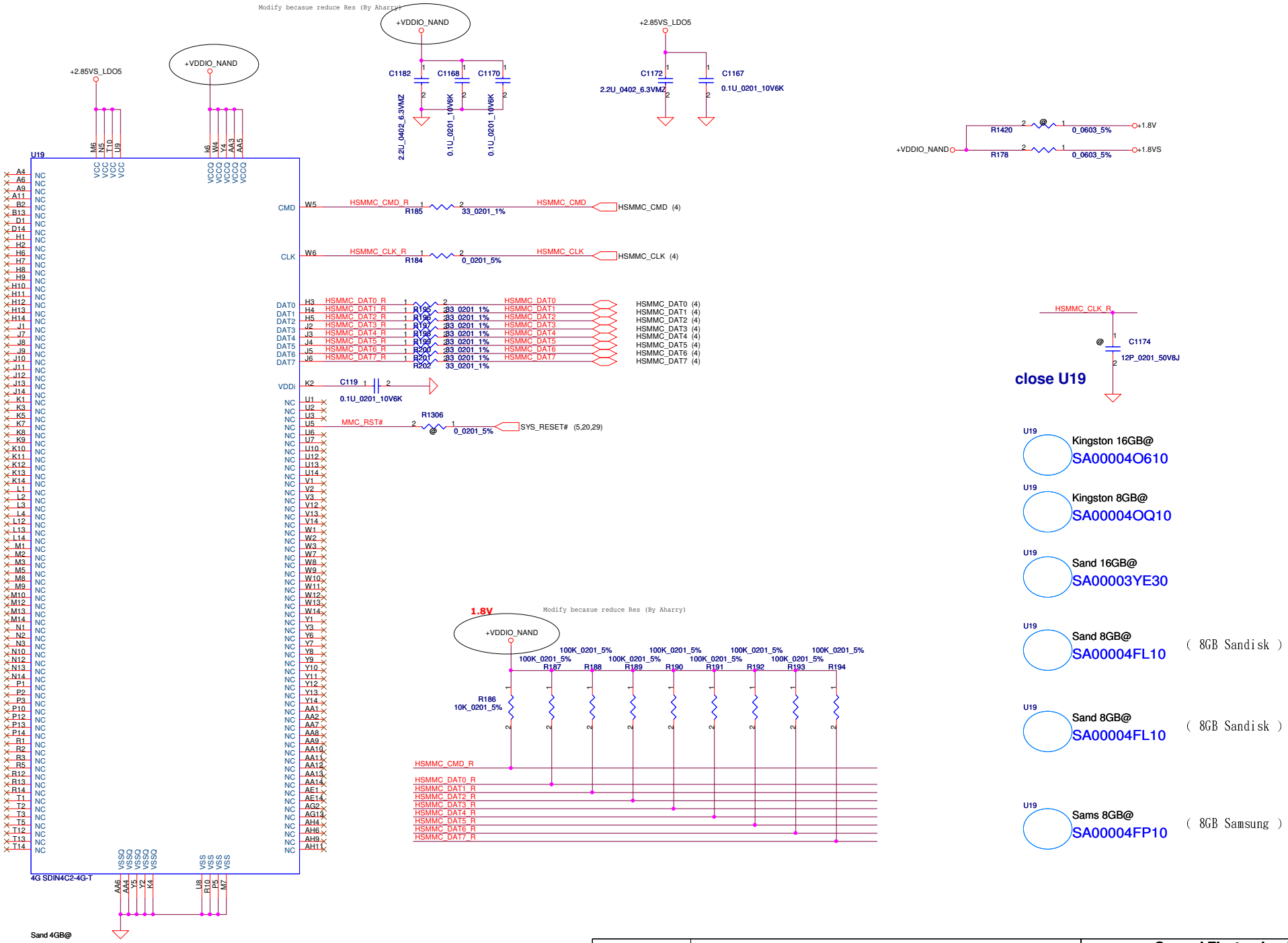

Security Classification	Compal Secret Data			Compal Electronics, Inc.
Issued Date	2011/4/1	Deciphered Date	2008/09/20	Title: EMMC
				Size: Custom; Document Number: LA-7251P; Rev: 1.0
				Date: Tuesday, April 12, 2011; Sheet 10 of 34

THIS SHEET OF ENGINEERING DRAWING IS THE PROPRIETARY PROPERTY OF COMPAL ELECTRONICS, INC. AND CONTAINS CONFIDENTIAL AND TRADE SECRET INFORMATION. THIS SHEET MAY NOT BE TRANSFERED FROM THE CUSTODY OF THE COMPETENT DIVISION OF R&D DEPARTMENT EXCEPT AS AUTHORIZED BY COMPAL ELECTRONICS, INC. NEITHER THIS SHEET NOR THE INFORMATION IT CONTAINS MAY BE USED BY OR DISCLOSED TO ANY THIRD PARTY WITHOUT PRIOR WRITTEN CONSENT OF COMPAL ELECTRONICS, INC.

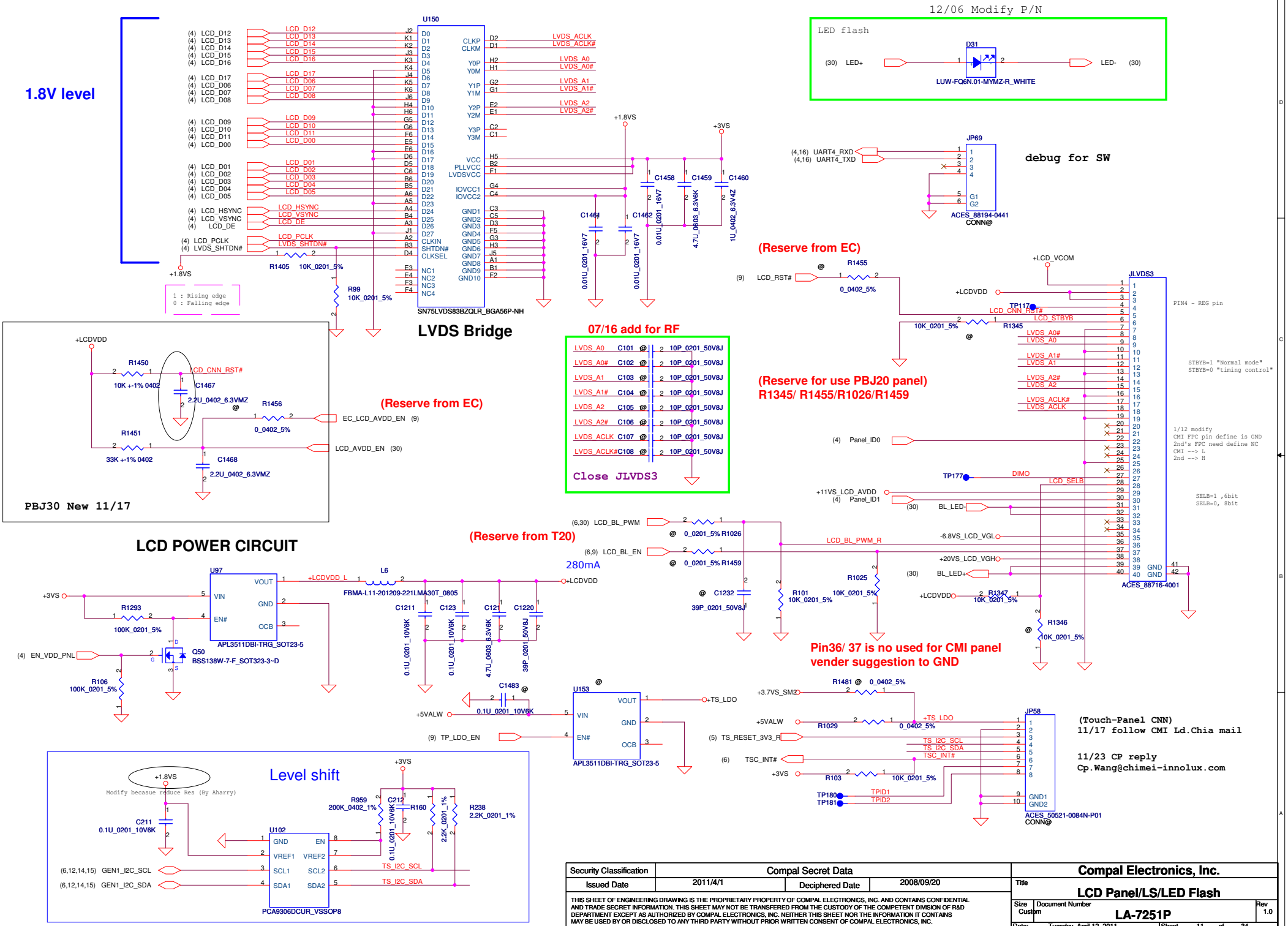

Security Classification	Compal Secret Data		
Issued Date	2011/4/1	Deciphered Date	2008/09/20

THIS SHEET OF ENGINEERING DRAWING IS THE PROPRIETARY PROPERTY OF COMPAL ELECTRONICS, INC. AND CONTAINS CONFIDENTIAL AND TRADE SECRET INFORMATION. THIS SHEET MAY NOT BE TRANSFERED FROM THE CUSTODY OF THE COMPETENT DIVISION OF R&D DEPARTMENT EXCEPT AS AUTHORIZED BY COMPAL ELECTRONICS, INC. NEITHER THIS SHEET NOR THE INFORMATION IT CONTAINS MAY BE USED BY OR DISCLOSED TO ANY THIRD PARTY WITHOUT PRIOR WRITTEN CONSENT OF COMPAL ELECTRONICS, INC.

Compal Electronics, Inc.

Title: **LCD Panel/LS/LED Flash**

Size: Custom | Document Number: **LA-7251P** | Rev: 1.0

Date: Tuesday, April 12, 2011 | Sheet 11 of 34

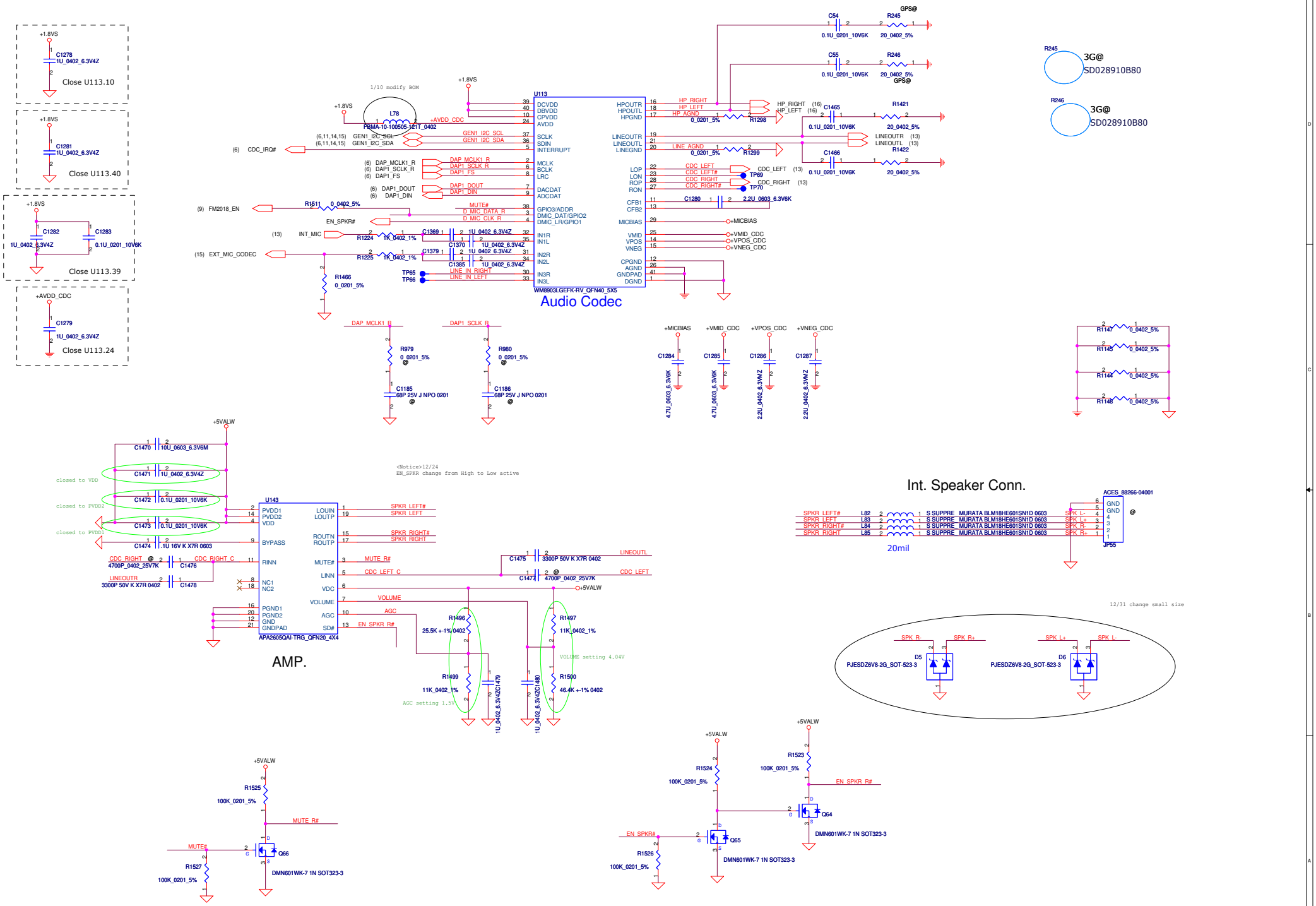

Security Classification	Compal Secret Data		
Issued Date	2011/4/1	Deciphered Date	2008/09/20

THIS SHEET OF ENGINEERING DRAWING IS THE PROPRIETARY PROPERTY OF COMPAL ELECTRONICS, INC. AND CONTAINS CONFIDENTIAL AND TRADE SECRET INFORMATION. THIS SHEET MAY NOT BE TRANSFERED FROM THE CUSTODY OF THE COMPETENT DIVISION OF R&D DEPARTMENT EXCEPT AS AUTHORIZED BY COMPAL ELECTRONICS, INC. NEITHER THIS SHEET NOR THE INFORMATION IT CONTAINS MAY BE USED BY OR DISCLOSED TO ANY THIRD PARTY WITHOUT PRIOR WRITTEN CONSENT OF COMPAL ELECTRONICS, INC.

Compal Electronics, Inc.

Title: **Audio Codec**

Size	Document Number	Rev
C	LA-7251P	1.0

Date: Thursday, April 21, 2011 | Sheet 12 of 34

12/06 Modify P/N

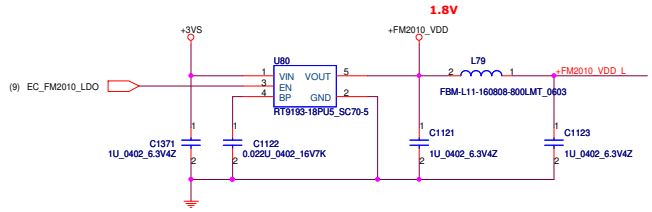

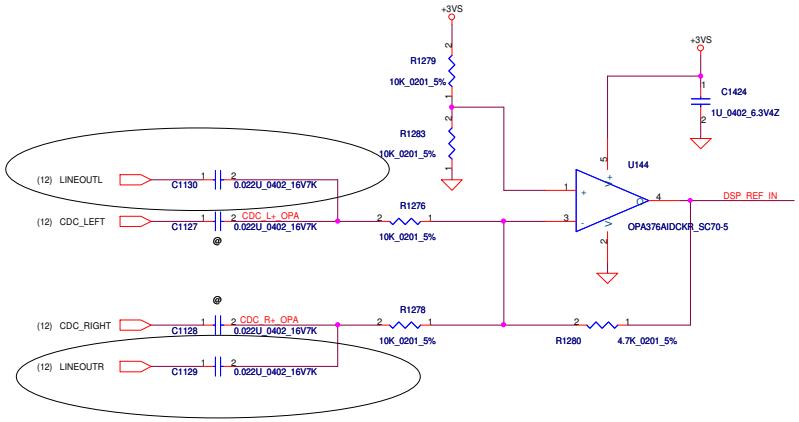

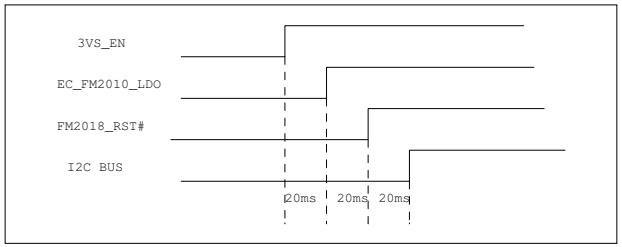

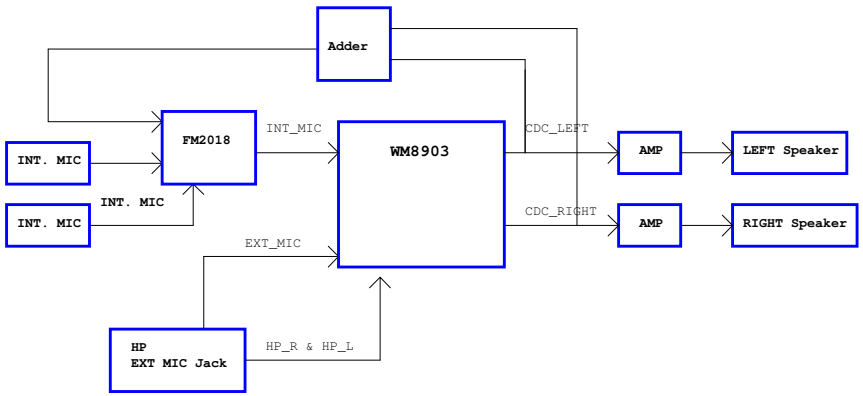

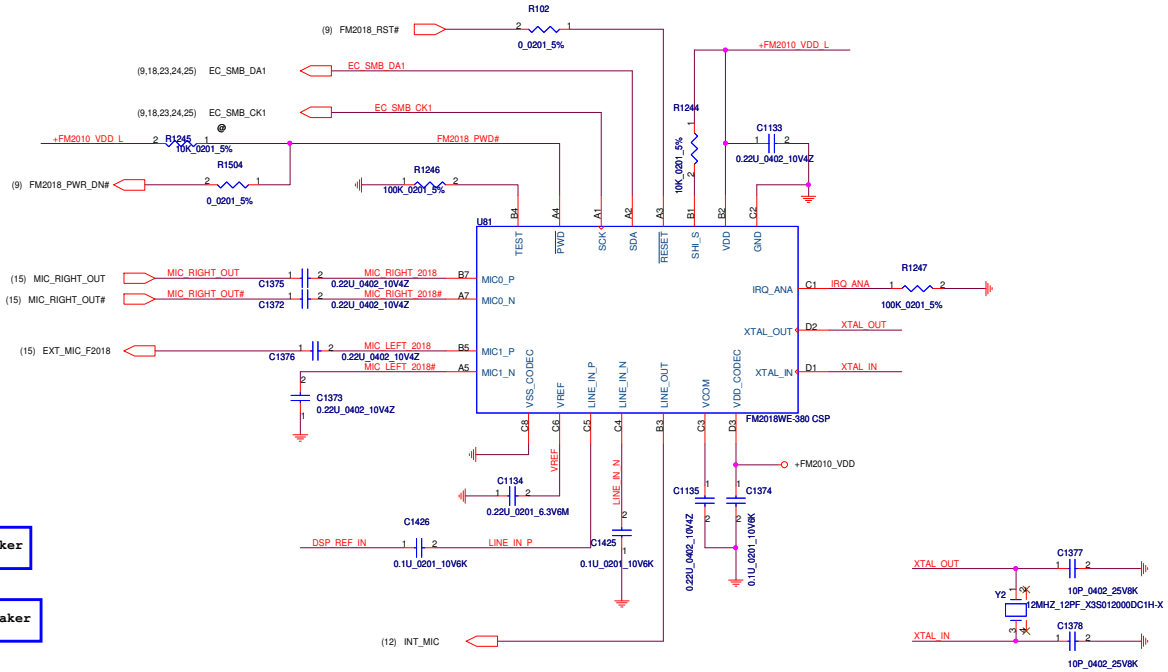

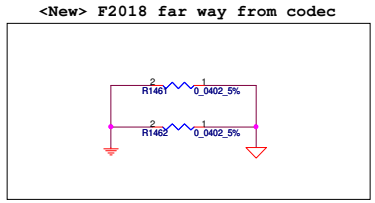

Security Classification	Compal Secret Data			Compal Electronics, Inc.
Issued Date	2011/4/1	Deciphered Date	2008/09/20	Title: FM2010
				Size: C; Document Number: LA-7251P; Rev: 1.0
				Date: Tuesday, April 12, 2011; Sheet 13 of 34

THIS SHEET OF ENGINEERING DRAWING IS THE PROPRIETARY PROPERTY OF COMPAL ELECTRONICS, INC. AND CONTAINS CONFIDENTIAL AND TRADE SECRET INFORMATION. THIS SHEET MAY NOT BE TRANSFERED FROM THE CUSTODY OF THE COMPETENT DIVISION OF R&D DEPARTMENT EXCEPT AS AUTHORIZED BY COMPAL ELECTRONICS, INC. NEITHER THIS SHEET NOR THE INFORMATION IT CONTAINS MAY BE USED BY OR DISCLOSED TO ANY THIRD PARTY WITHOUT PRIOR WRITTEN CONSENT OF COMPAL ELECTRONICS, INC.

Level shift

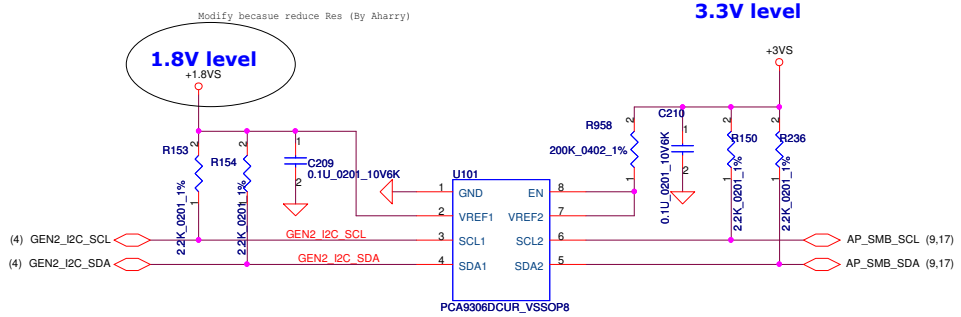

<APSMBUS to T20/3G_CARD>

GYRO

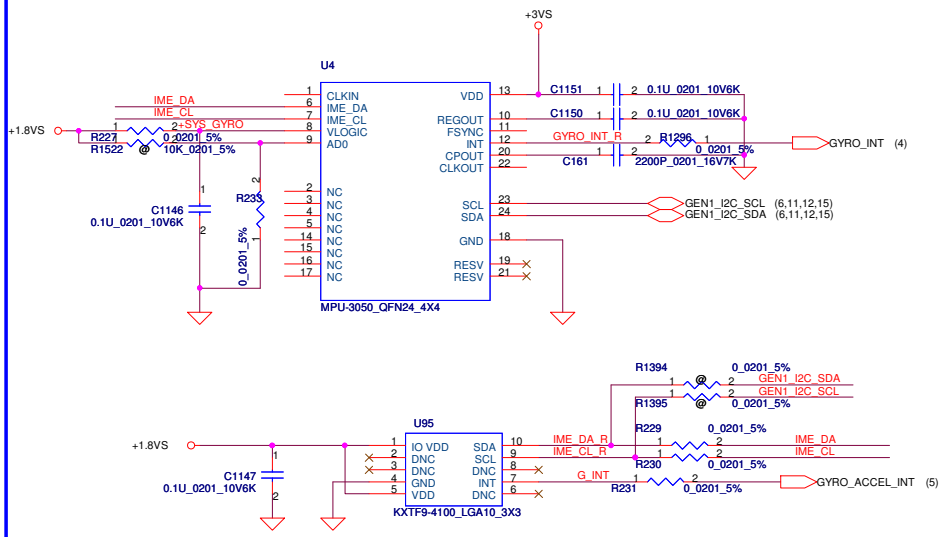

Ecompass

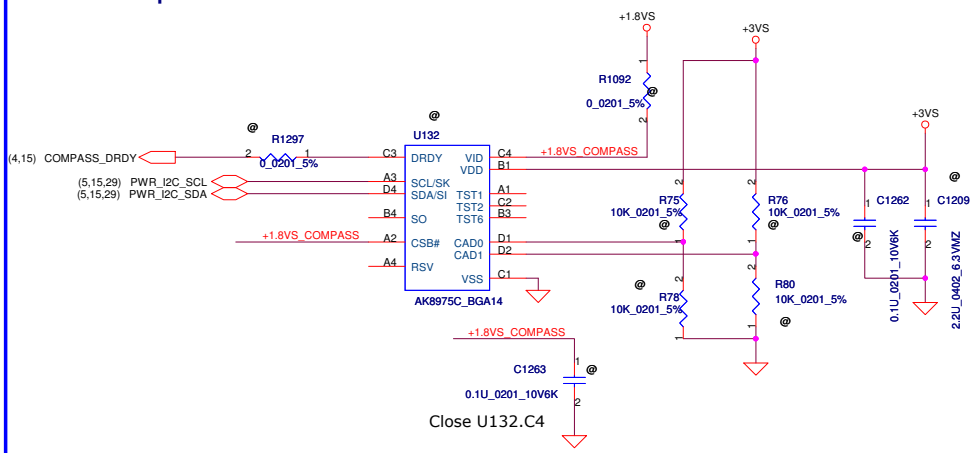

max current is 350uA
VR1 =17mV

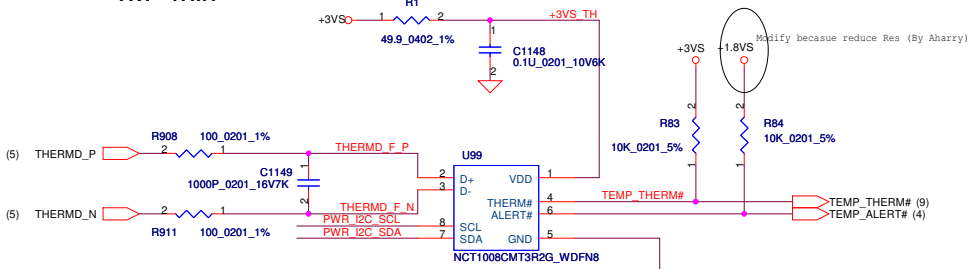

address 0X4C

Security Classification	Compal Secret Data		
Issued Date	2011/4/1	Deciphered Date	2008/09/20

THIS SHEET OF ENGINEERING DRAWING IS THE PROPRIETARY PROPERTY OF COMPAL ELECTRONICS, INC. AND CONTAINS CONFIDENTIAL AND TRADE SECRET INFORMATION. THIS SHEET MAY NOT BE TRANSFERED FROM THE CUSTODY OF THE COMPETENT DIVISION OF R&D DEPARTMENT EXCEPT AS AUTHORIZED BY COMPAL ELECTRONICS, INC. NEITHER THIS SHEET NOR THE INFORMATION IT CONTAINS MAY BE USED BY OR DISCLOSED TO ANY THIRD PARTY WITHOUT PRIOR WRITTEN CONSENT OF COMPAL ELECTRONICS, INC.

Compal Electronics, Inc.

Title: **G-Sensor/Thermal/GYRO**

Size: Custom | Document Number: **LA-7251P** | Rev: 1.0

Date: Tuesday, April 12, 2011 | Sheet 14 of 34

5M Camera

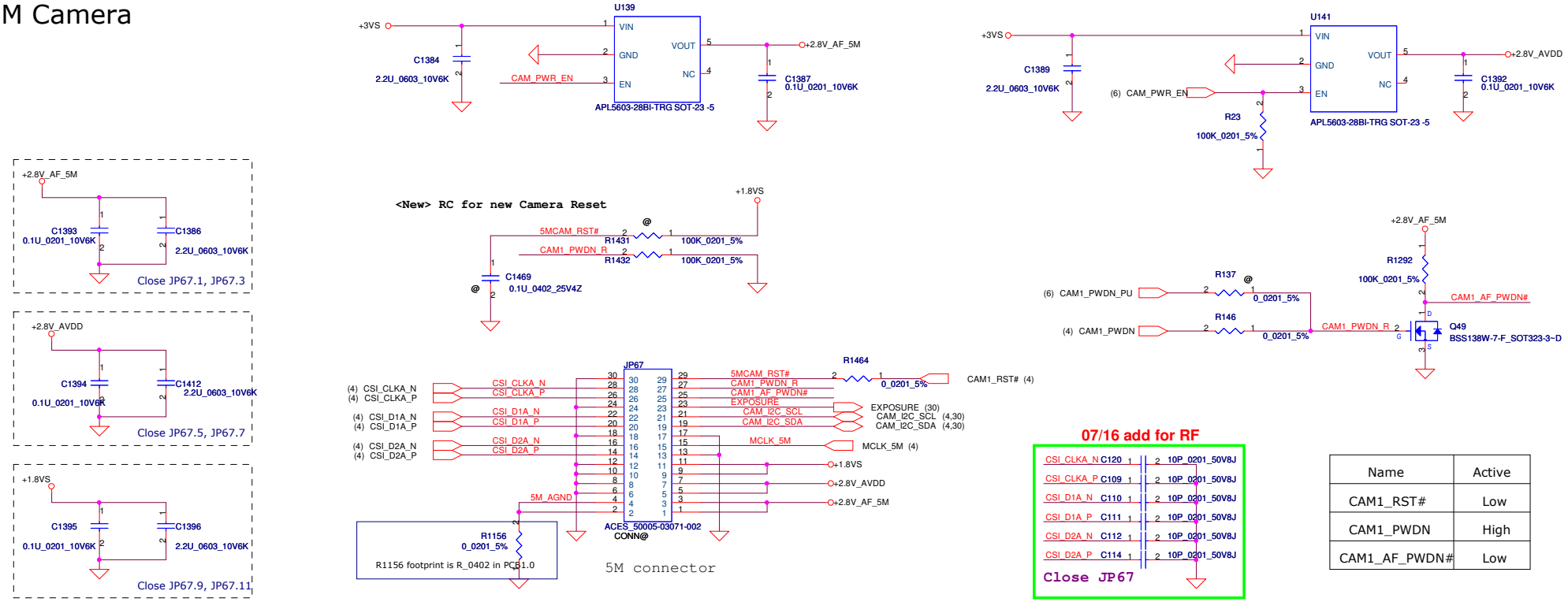

Name	Active
CAM1_RST#	Low
CAM1_PWDN	High
CAM1_AF_PWDN#	Low

To I/O Board

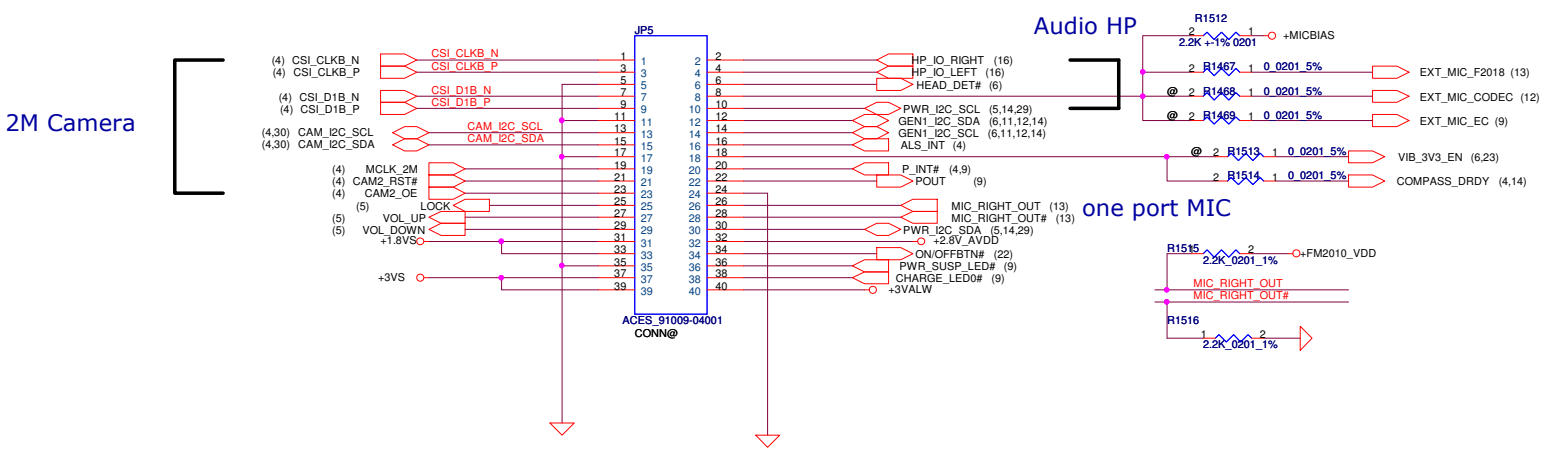

Security Classification	Compal Secret Data		
Issued Date	2011/4/1	Deciphered Date	2008/09/20

THIS SHEET OF ENGINEERING DRAWING IS THE PROPRIETARY PROPERTY OF COMPAL ELECTRONICS, INC. AND CONTAINS CONFIDENTIAL AND TRADE SECRET INFORMATION. THIS SHEET MAY NOT BE TRANSFERED FROM THE CUSTODY OF THE COMPETENT DIVISION OF R&D DEPARTMENT EXCEPT AS AUTHORIZED BY COMPAL ELECTRONICS, INC. NEITHER THIS SHEET NOR THE INFORMATION IT CONTAINS MAY BE USED BY OR DISCLOSED TO ANY THIRD PARTY WITHOUT PRIOR WRITTEN CONSENT OF COMPAL ELECTRONICS, INC.

Compal Electronics, Inc.

Title: **5M Camera/ IO board CONN.**

Size: Custom | Document Number: **LA-7251P** | Rev: 1.0

Date: Thursday, April 21, 2011 | Sheet 15 of 34

Docking

<New>From T20
L => Dock_HP
H => MB (Default)

From T20 (SDIO/3V)

POR status =PD

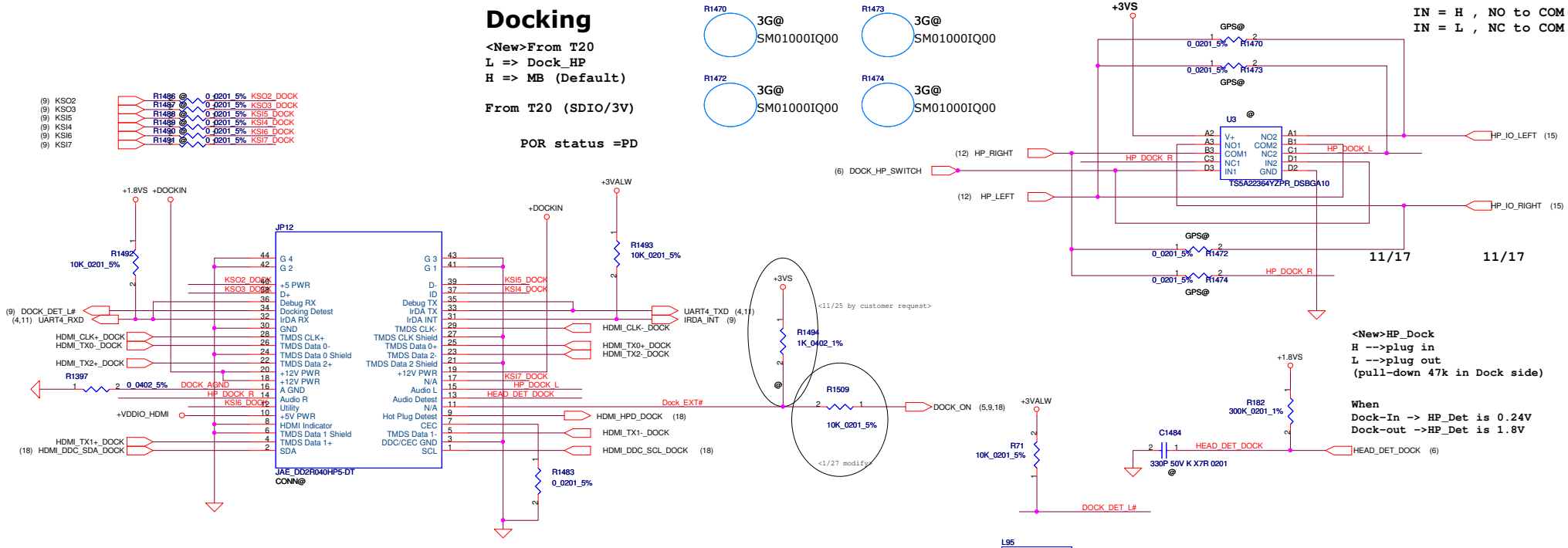

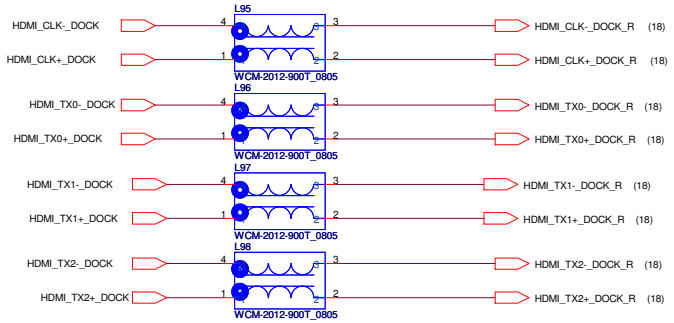

ULPI

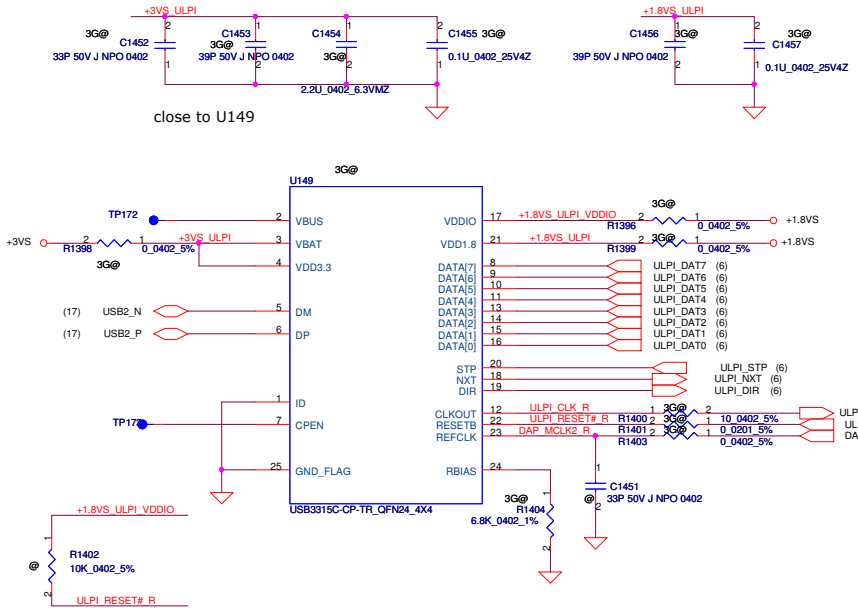

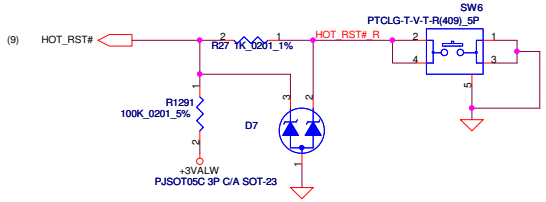

Security Classification	Compal Secret Data		
Issued Date	2011/4/1	Deciphered Date	2008/09/20

THIS SHEET OF ENGINEERING DRAWING IS THE PROPRIETARY PROPERTY OF COMPAL ELECTRONICS, INC. AND CONTAINS CONFIDENTIAL AND TRADE SECRET INFORMATION. THIS SHEET MAY NOT BE TRANSFERED FROM THE CUSTODY OF THE COMPETENT DIVISION OF R&D DEPARTMENT EXCEPT AS AUTHORIZED BY COMPAL ELECTRONICS, INC. NEITHER THIS SHEET NOR THE INFORMATION IT CONTAINS MAY BE USED BY OR DISCLOSED TO ANY THIRD PARTY WITHOUT PRIOR WRITTEN CONSENT OF COMPAL ELECTRONICS, INC.

Compal Electronics, Inc.

Title: Docking/ULPI

Size: Custom | Document Number: LA-7251P | Rev: 1.0

Date: Tuesday, April 12, 2011 | Sheet 16 of 34

SIM CARD

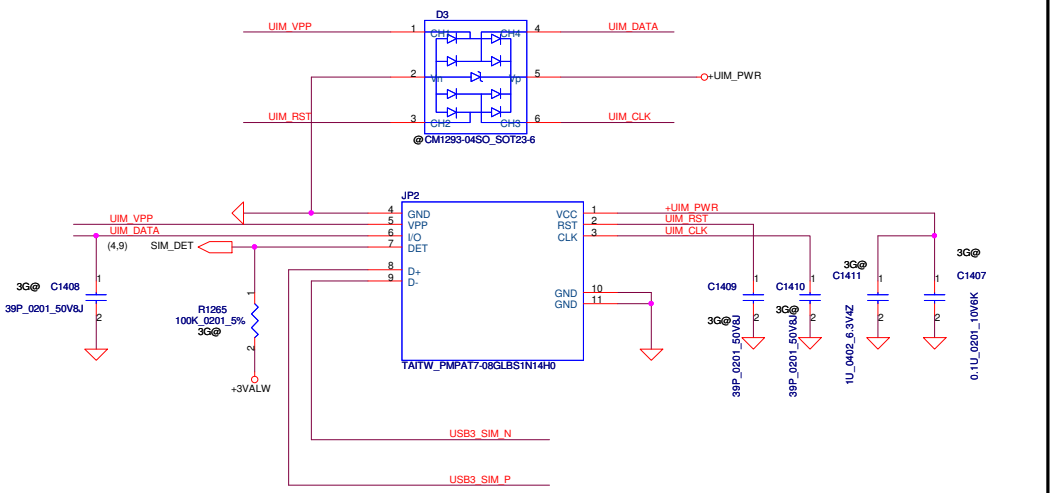

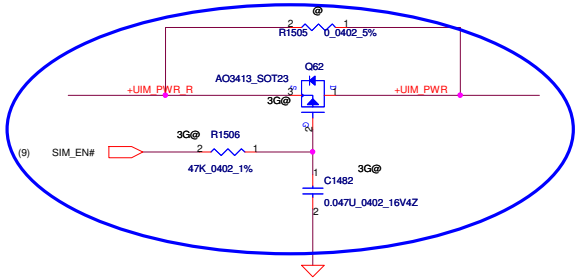

Mini-Express Card for WWAN

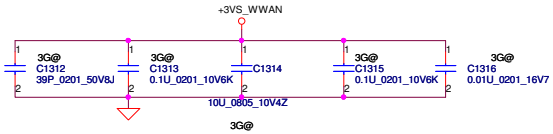

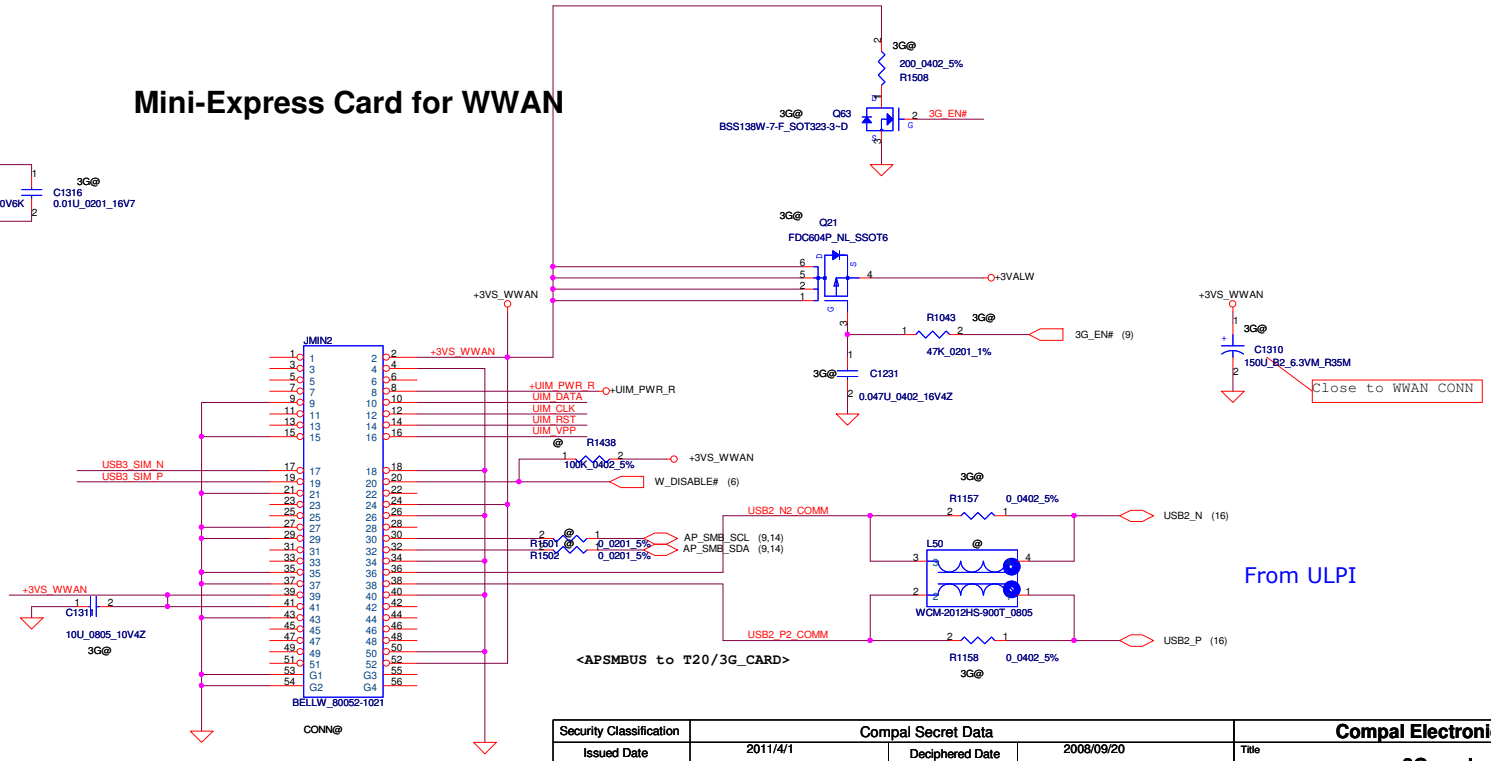

Security Classification	Compal Secret Data			Compal Electronics, Inc.
Issued Date	2011/4/1	Deciphered Date	2008/09/20	Title: 3G card
				Size: Custom; Document Number: LA-7251P; Rev: 1.0
				Date: Thursday, April 28, 2011; Sheet 17 of 34

THIS SHEET OF ENGINEERING DRAWING IS THE PROPRIETARY PROPERTY OF COMPAL ELECTRONICS, INC. AND CONTAINS CONFIDENTIAL AND TRADE SECRET INFORMATION. THIS SHEET MAY NOT BE TRANSFERED FROM THE CUSTODY OF THE COMPETENT DIVISION OF R&D DEPARTMENT EXCEPT AS AUTHORIZED BY COMPAL ELECTRONICS, INC. NEITHER THIS SHEET NOR THE INFORMATION IT CONTAINS MAY BE USED BY OR DISCLOSED TO ANY THIRD PARTY WITHOUT PRIOR WRITTEN CONSENT OF COMPAL ELECTRONICS, INC.

HDMI CEC Controller

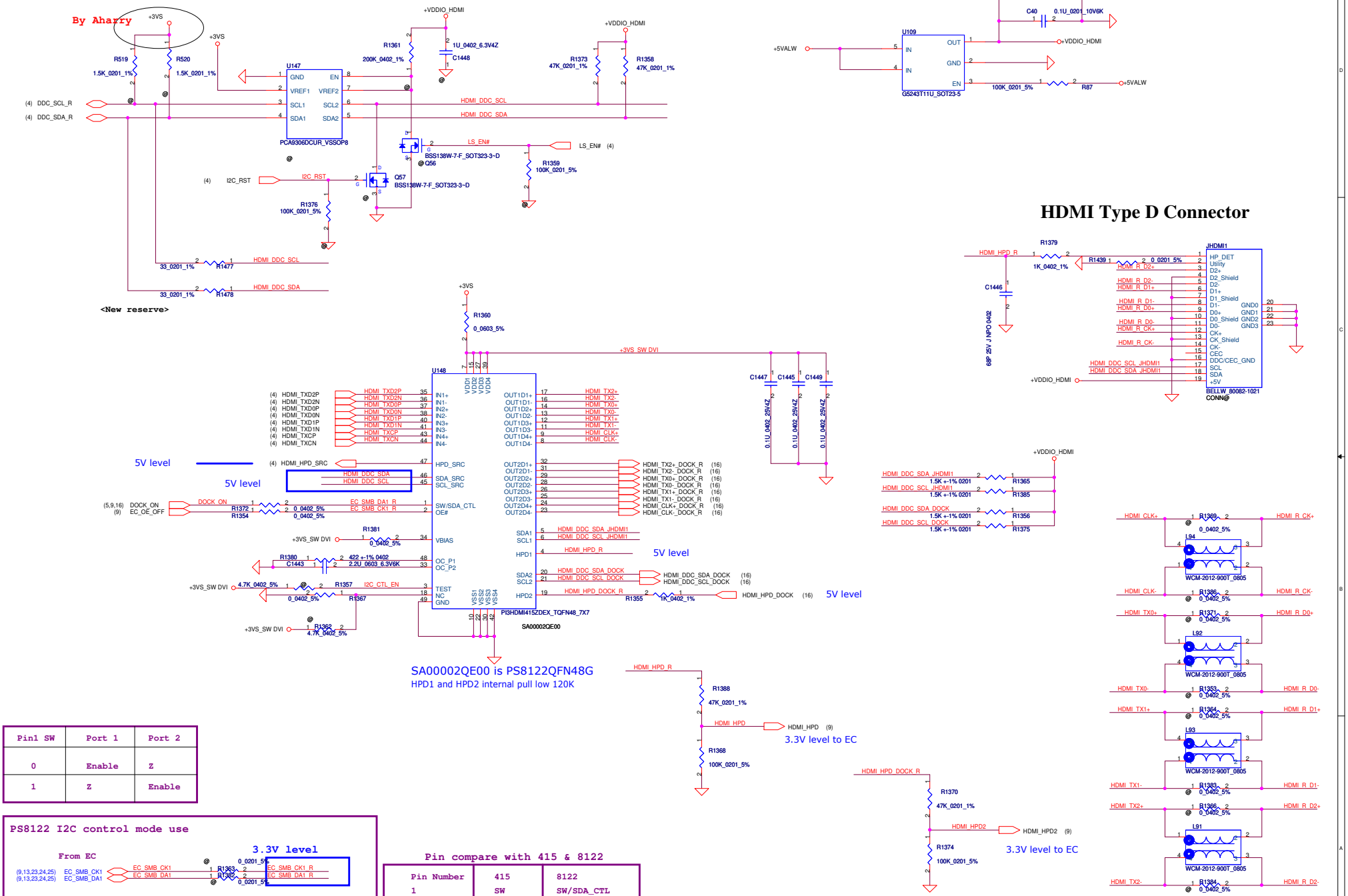

Pin1 SW	Port 1	Port 2
0	Enable	Z
1	Z	Enable

PS8122 I2C control mode use

From EC — 3.3V level

(9,13,23,24,25) EC_SMB_CK1 — EC_SMB_CK1 — R1363 0_0201_5% — EC_SMB_CK1_R
(9,13,23,24,25) EC_SMB_DA1 — EC_SMB_DA1 — R1362 0_0201_5% — EC_SMB_DA1_R

PS8122 I2C Device Address Seting:
I2C_ADDR=LOW,9E/9F (default)
I2C_ADDR=HIGH,BE/BF

Pin compare with 415 & 8122

Pin Number	415	8122
1	SW	SW/SDA_CTL
2	OE#	OE#/SDA_CTL
3	Test	I2C_CTL_EN
18	NC	MODE/I2C_ADDR
33	OC_P2	CEXT
48	OC_P1	REXT

Security Classification	Compal Secret Data		
Issued Date	2011/4/1	Deciphered Date	2008/09/20

THIS SHEET OF ENGINEERING DRAWING IS THE PROPRIETARY PROPERTY OF COMPAL ELECTRONICS, INC. AND CONTAINS CONFIDENTIAL AND TRADE SECRET INFORMATION. THIS SHEET MAY NOT BE TRANSFERED FROM THE CUSTODY OF THE COMPETENT DIVISION OF R&D DEPARTMENT EXCEPT AS AUTHORIZED BY COMPAL ELECTRONICS, INC. NEITHER THIS SHEET NOR THE INFORMATION IT CONTAINS MAY BE USED BY OR DISCLOSED TO ANY THIRD PARTY WITHOUT PRIOR WRITTEN CONSENT OF COMPAL ELECTRONICS, INC.

Compal Electronics, Inc.

Title: HDMI

Size: C | Document Number: LA-7251P | Rev: 1.0

Date: Tuesday, April 12, 2011 | Sheet 18 of 34

Micro USB

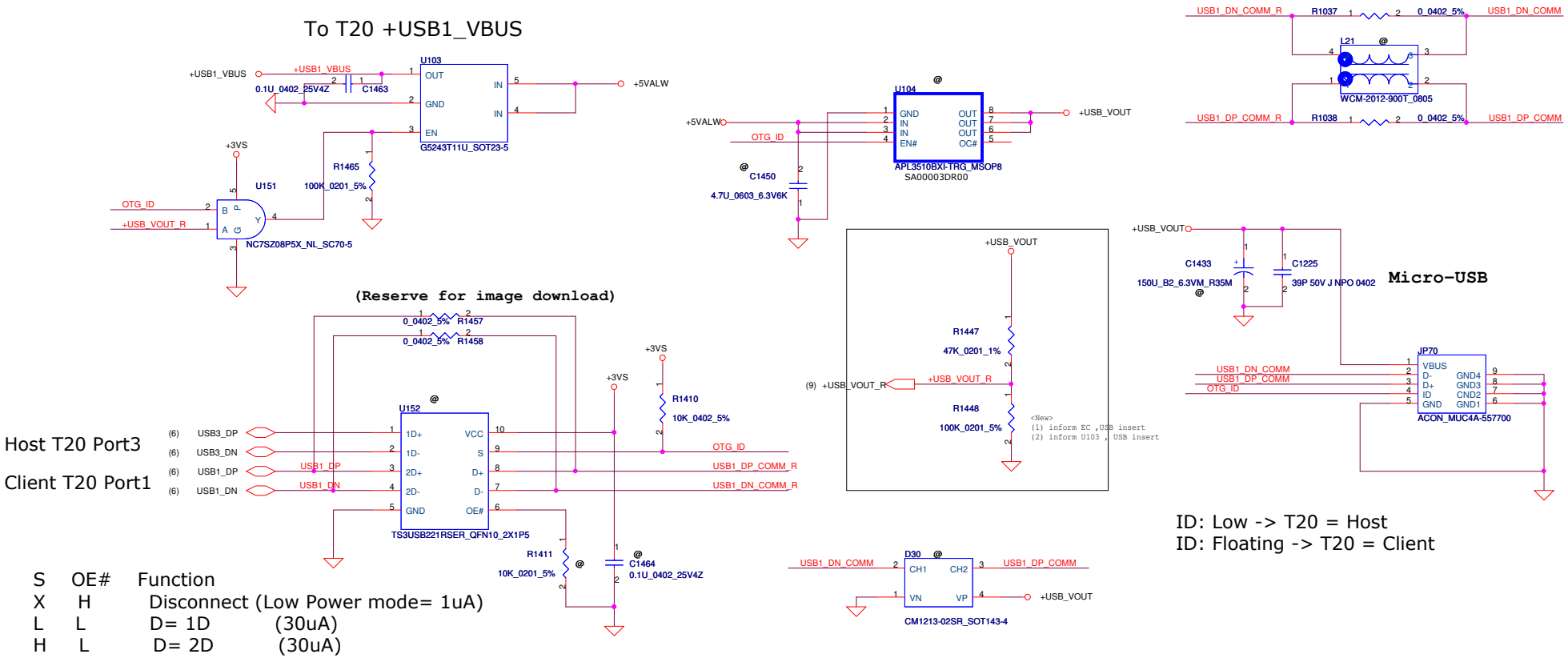

Micro SD

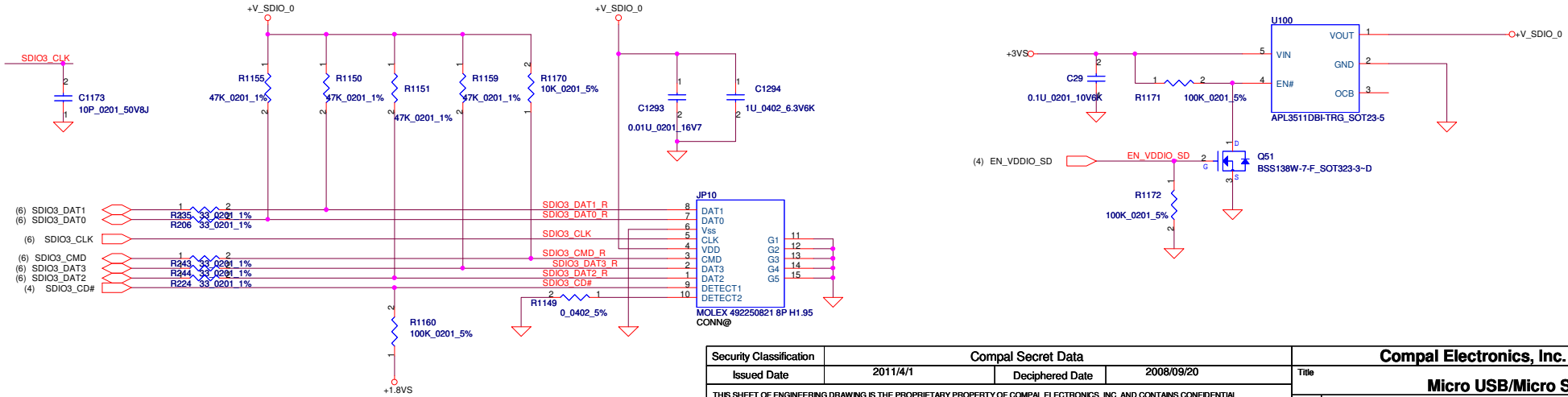

Security Classification	Compal Secret Data		
Issued Date	2011/4/1	Deciphered Date	2008/09/20

THIS SHEET OF ENGINEERING DRAWING IS THE PROPRIETARY PROPERTY OF COMPAL ELECTRONICS, INC. AND CONTAINS CONFIDENTIAL AND TRADE SECRET INFORMATION. THIS SHEET MAY NOT BE TRANSFERED FROM THE CUSTODY OF THE COMPETENT DIVISION OF R&D DEPARTMENT EXCEPT AS AUTHORIZED BY COMPAL ELECTRONICS, INC. NEITHER THIS SHEET NOR THE INFORMATION IT CONTAINS MAY BE USED BY OR DISCLOSED TO ANY THIRD PARTY WITHOUT PRIOR WRITTEN CONSENT OF COMPAL ELECTRONICS, INC.

Compal Electronics, Inc.

Title: **Micro USB/Micro SD**

Size: Custom | Document Number: **LA-7251P** | Rev: 1.0

Date: Tuesday, April 12, 2011 | Sheet 19 of 34

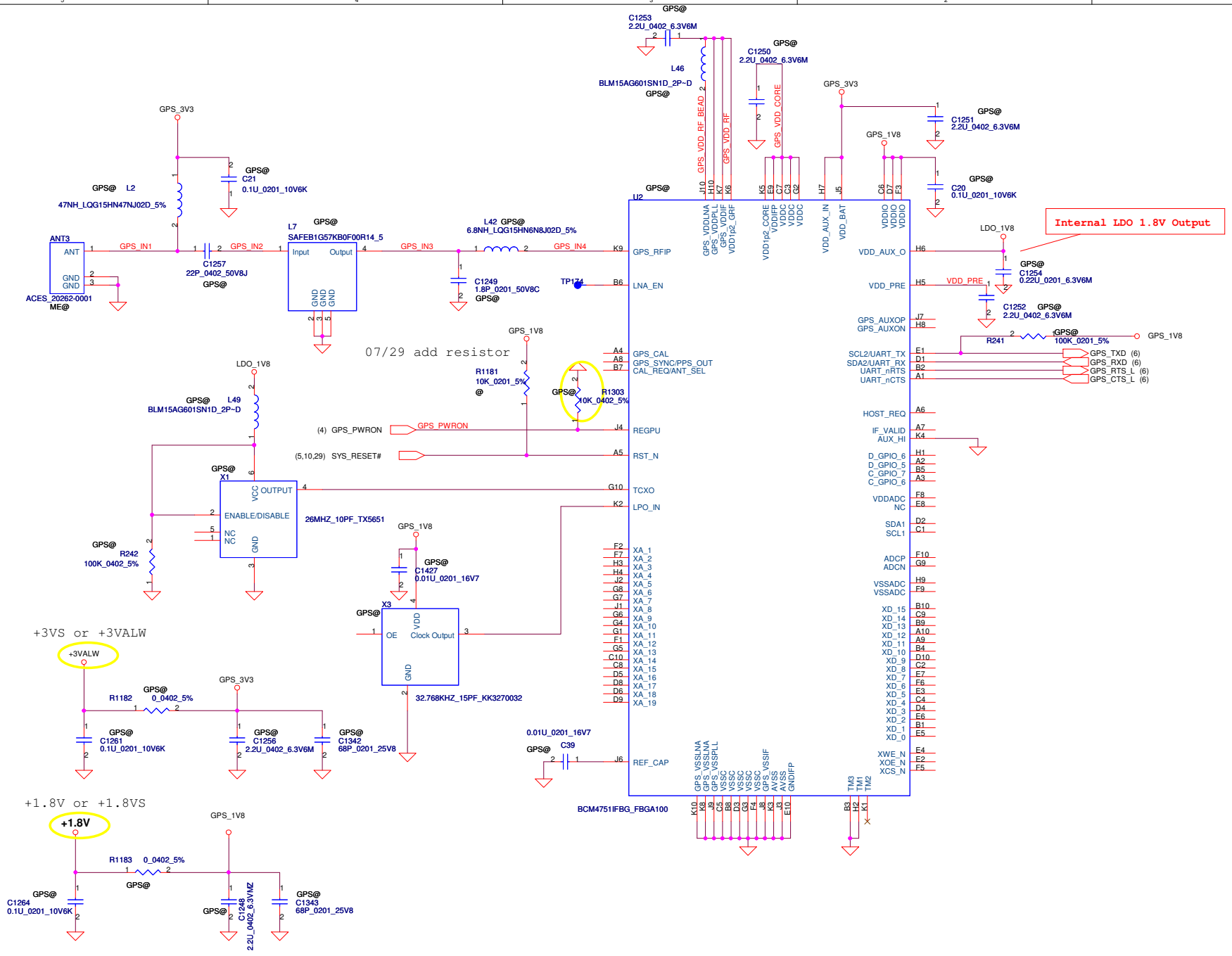

Security Classification	Compal Secret Data		
Issued Date	2011/4/1	Deciphered Date	2008/09/20

THIS SHEET OF ENGINEERING DRAWING IS THE PROPRIETARY PROPERTY OF COMPAL ELECTRONICS, INC. AND CONTAINS CONFIDENTIAL AND TRADE SECRET INFORMATION. THIS SHEET MAY NOT BE TRANSFERED FROM THE CUSTODY OF THE COMPETENT DIVISION OF R&D DEPARTMENT EXCEPT AS AUTHORIZED BY COMPAL ELECTRONICS, INC. NEITHER THIS SHEET NOR THE INFORMATION IT CONTAINS MAY BE USED BY OR DISCLOSED TO ANY THIRD PARTY WITHOUT PRIOR WRITTEN CONSENT OF COMPAL ELECTRONICS, INC.

Compal Electronics, Inc.

Title: **GPS**

Size: Custom | Document Number: **LA-7251P** | Rev: 1.0

Date: Tuesday, April 12, 2011 | Sheet 20 of 34

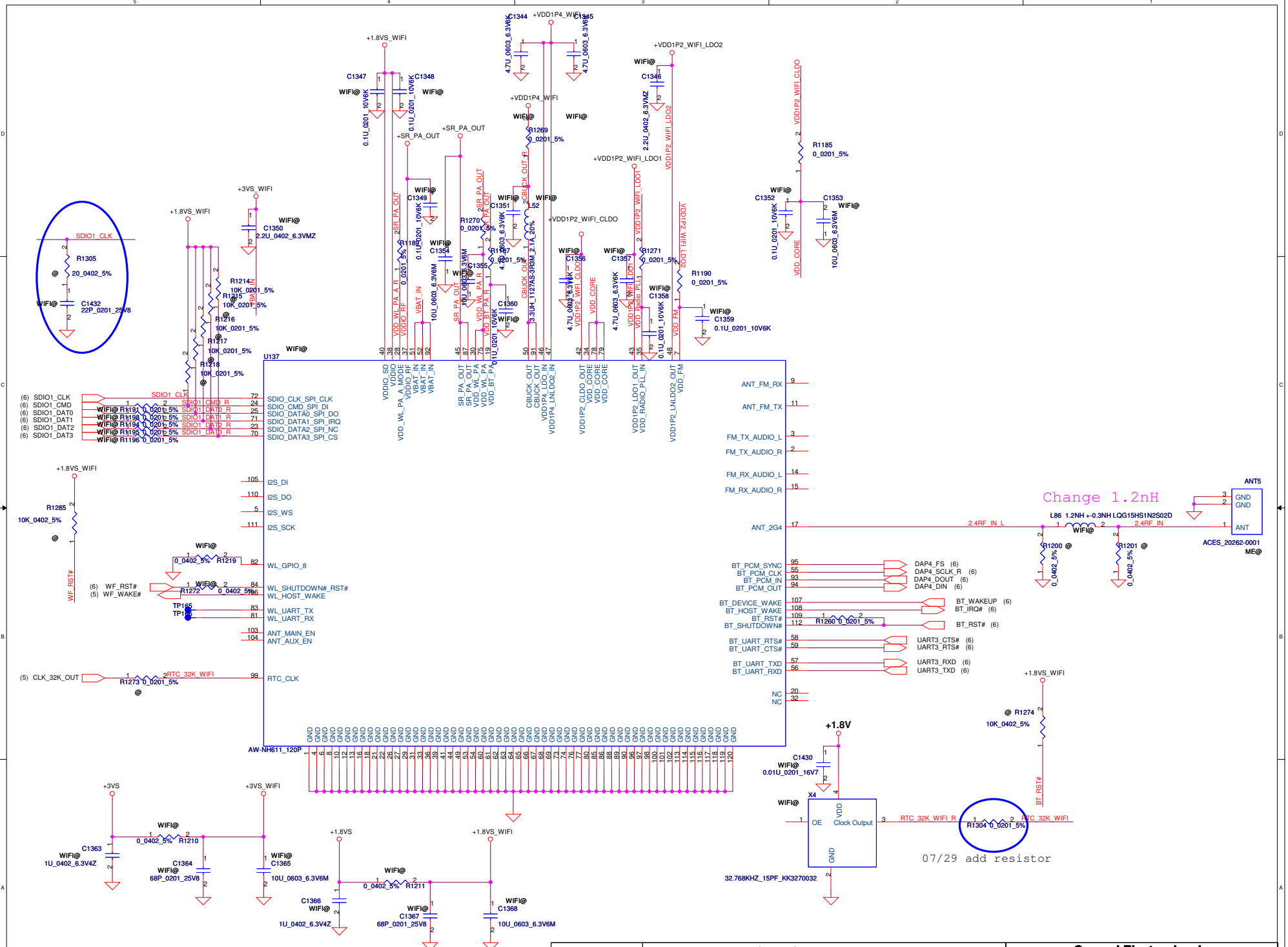

Security Classification	Compal Secret Data		
Issued Date	2011/4/1	Deciphered Date	2008/09/20

THIS SHEET OF ENGINEERING DRAWING IS THE PROPRIETARY PROPERTY OF COMPAL ELECTRONICS, INC. AND CONTAINS CONFIDENTIAL AND TRADE SECRET INFORMATION. THIS SHEET MAY NOT BE TRANSFERED FROM THE CUSTODY OF THE COMPETENT DIVISION OF R&D DEPARTMENT EXCEPT AS AUTHORIZED BY COMPAL ELECTRONICS, INC. NEITHER THIS SHEET NOR THE INFORMATION IT CONTAINS MAY BE USED BY OR DISCLOSED TO ANY THIRD PARTY WITHOUT PRIOR WRITTEN CONSENT OF COMPAL ELECTRONICS, INC.

Compal Electronics, Inc.

Title: **WIFI/BT**

Size: Custom | Document Number: **LA-7251P** | Rev: 1.0

Date: Tuesday, April 12, 2011 | Sheet 21 of 34

Power Button

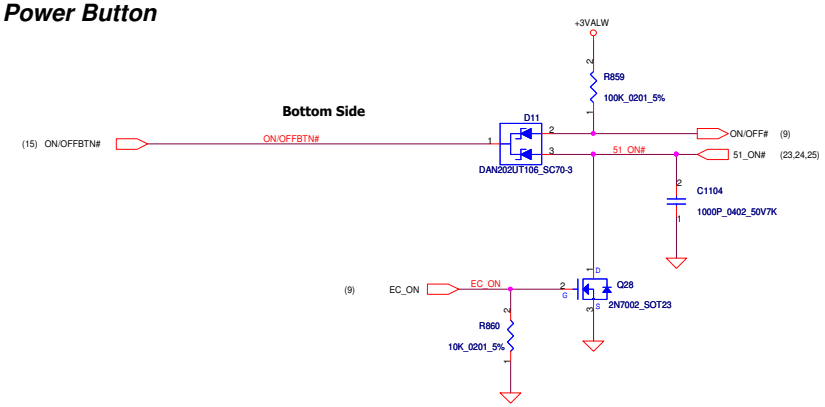

+3VALW to +3VS Transfer

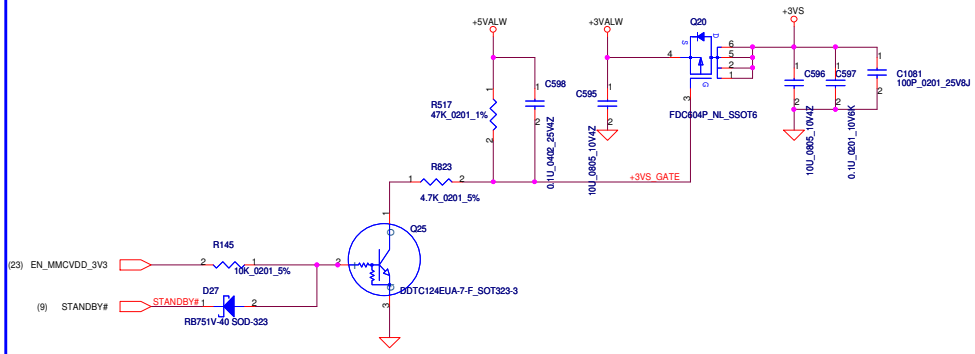

+1.8VS to +1.8VS_S3 Transfer

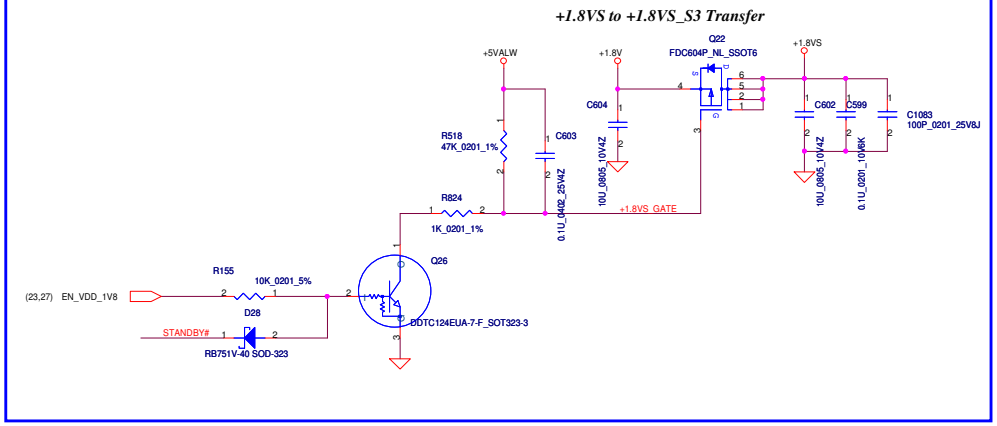

connect to PMU

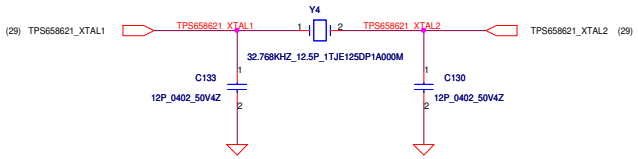

Security Classification	Compal Secret Data			Compal Electronics, Inc.
Issued Date	2011/4/1	Deciphered Date	2008/09/20	Title: DC interface/Power Button
				Size: C; Document Number: LA-7251P; Rev: 1.0
				Date: Tuesday, April 12, 2011; Sheet 22 of 34

THIS SHEET OF ENGINEERING DRAWING IS THE PROPRIETARY PROPERTY OF COMPAL ELECTRONICS, INC. AND CONTAINS CONFIDENTIAL AND TRADE SECRET INFORMATION. THIS SHEET MAY NOT BE TRANSFERED FROM THE CUSTODY OF THE COMPETENT DIVISION OF R&D DEPARTMENT EXCEPT AS AUTHORIZED BY COMPAL ELECTRONICS, INC. NEITHER THIS SHEET NOR THE INFORMATION IT CONTAINS MAY BE USED BY OR DISCLOSED TO ANY THIRD PARTY WITHOUT PRIOR WRITTEN CONSENT OF COMPAL ELECTRONICS, INC.

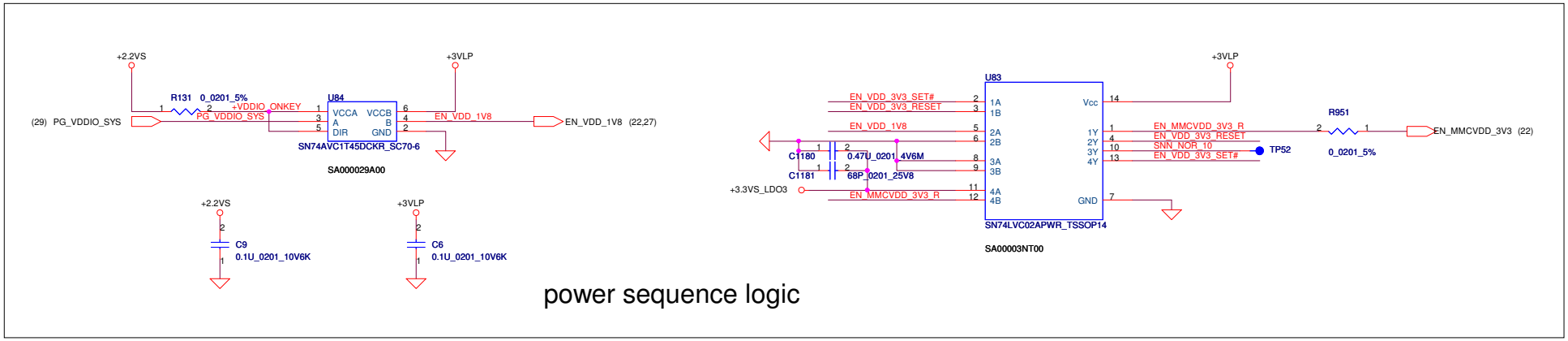

power sequence logic

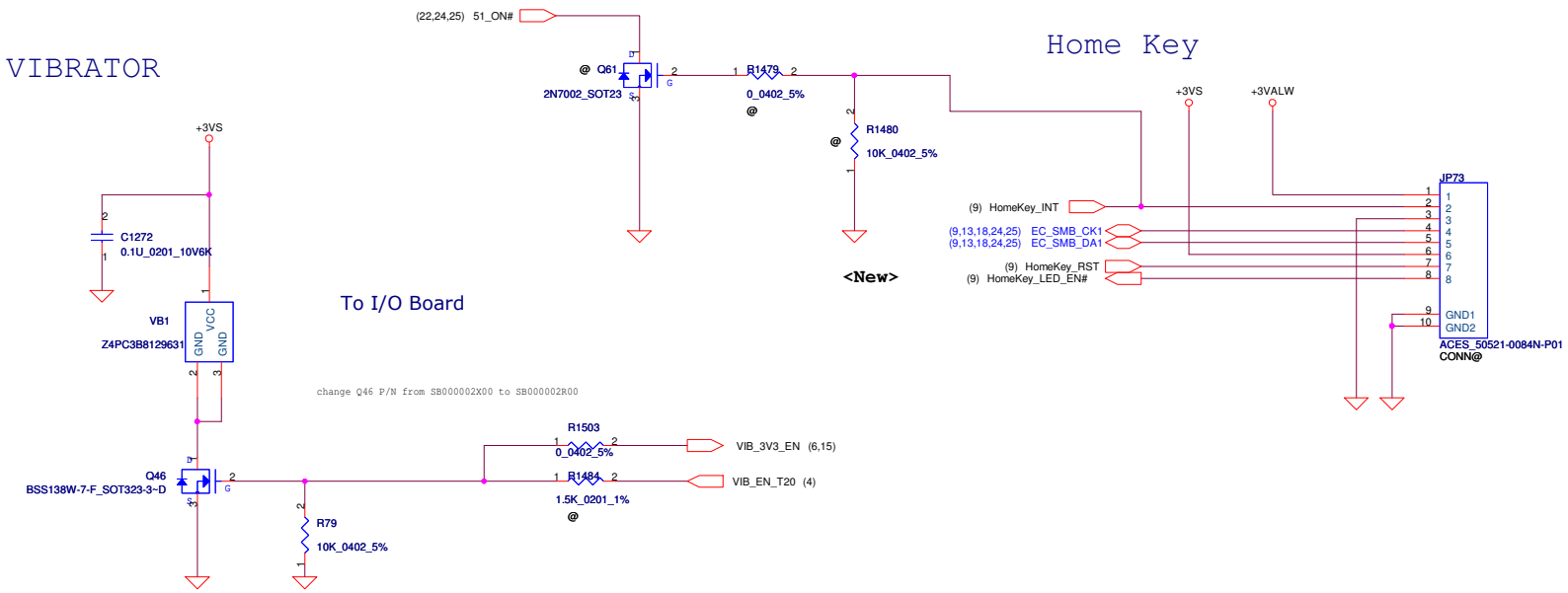

Security Classification	Compal Secret Data		
Issued Date	2011/4/1	Deciphered Date	2008/09/20

THIS SHEET OF ENGINEERING DRAWING IS THE PROPRIETARY PROPERTY OF COMPAL ELECTRONICS, INC. AND CONTAINS CONFIDENTIAL AND TRADE SECRET INFORMATION. THIS SHEET MAY NOT BE TRANSFERED FROM THE CUSTODY OF THE COMPETENT DIVISION OF R&D DEPARTMENT EXCEPT AS AUTHORIZED BY COMPAL ELECTRONICS, INC. NEITHER THIS SHEET NOR THE INFORMATION IT CONTAINS MAY BE USED BY OR DISCLOSED TO ANY THIRD PARTY WITHOUT PRIOR WRITTEN CONSENT OF COMPAL ELECTRONICS, INC.

Compal Electronics, Inc.

Title: **Sequence/Vibrator/Home Key**

Size: Custom | Document Number: **LA-7251P** | Rev: 1.0

Date: Tuesday, April 12, 2011 | Sheet 23 of 34

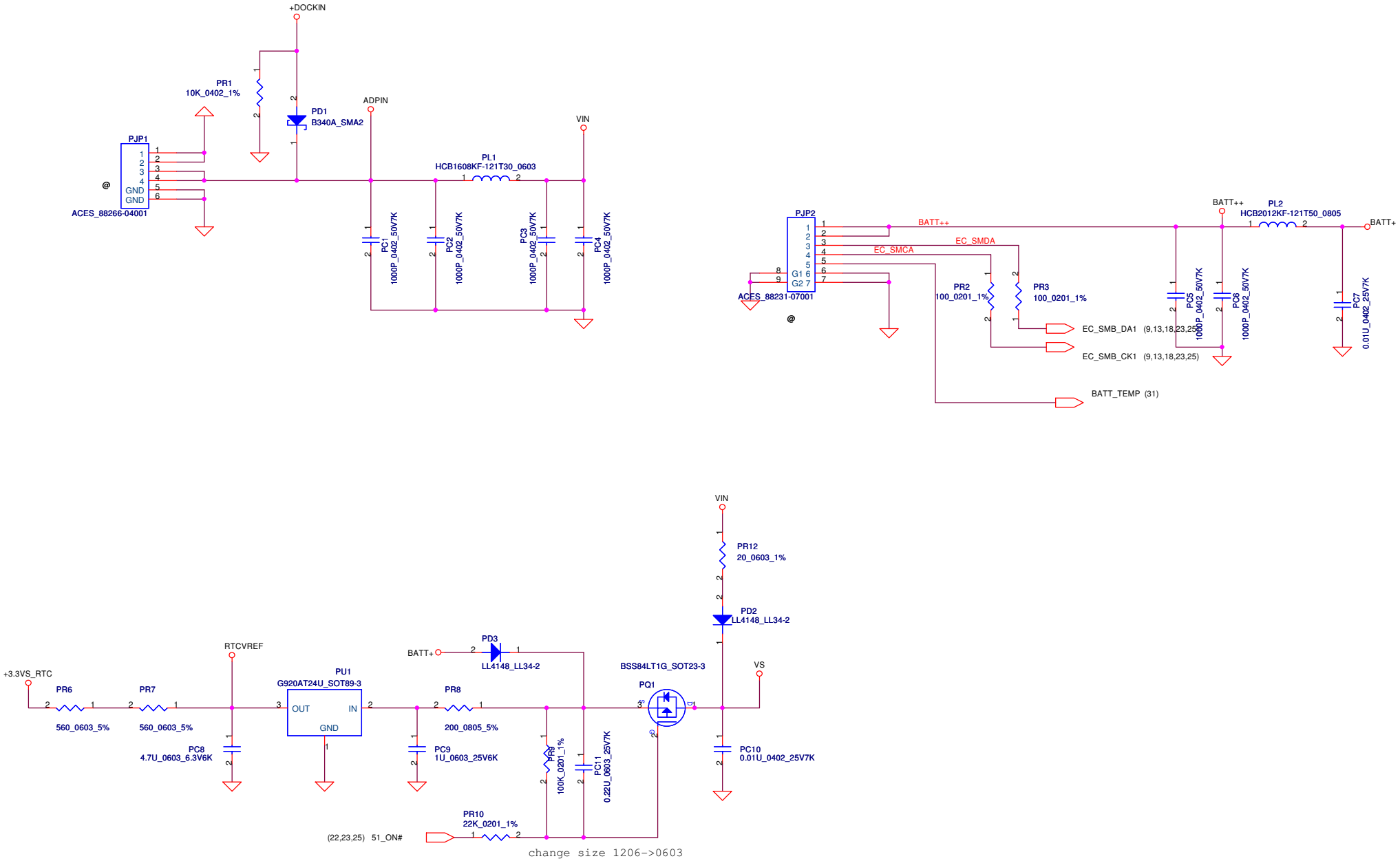

Security Classification	Compal Secret Data		
Issued Date	2006/08/18	Deciphered Date	2008/09/20

THIS SHEET OF ENGINEERING DRAWING IS THE PROPRIETARY PROPERTY OF COMPAL ELECTRONICS, INC. AND CONTAINS CONFIDENTIAL AND TRADE SECRET INFORMATION. THIS SHEET MAY NOT BE TRANSFERED FROM THE CUSTODY OF THE COMPETENT DIVISION OF R&D DEPARTMENT EXCEPT AS AUTHORIZED BY COMPAL ELECTRONICS, INC. NEITHER THIS SHEET NOR THE INFORMATION IT CONTAINS MAY BE USED BY OR DISCLOSED TO ANY THIRD PARTY WITHOUT PRIOR WRITTEN CONSENT OF COMPAL ELECTRONICS, INC.

Compal Electronics, Inc.

Title: **DCIN / BATT CONN / RTC**

Size: Custom | Document Number: **LA-7251P** | Rev: 0.1

Date: Thursday, April 21, 2011 | Sheet 24 of 34

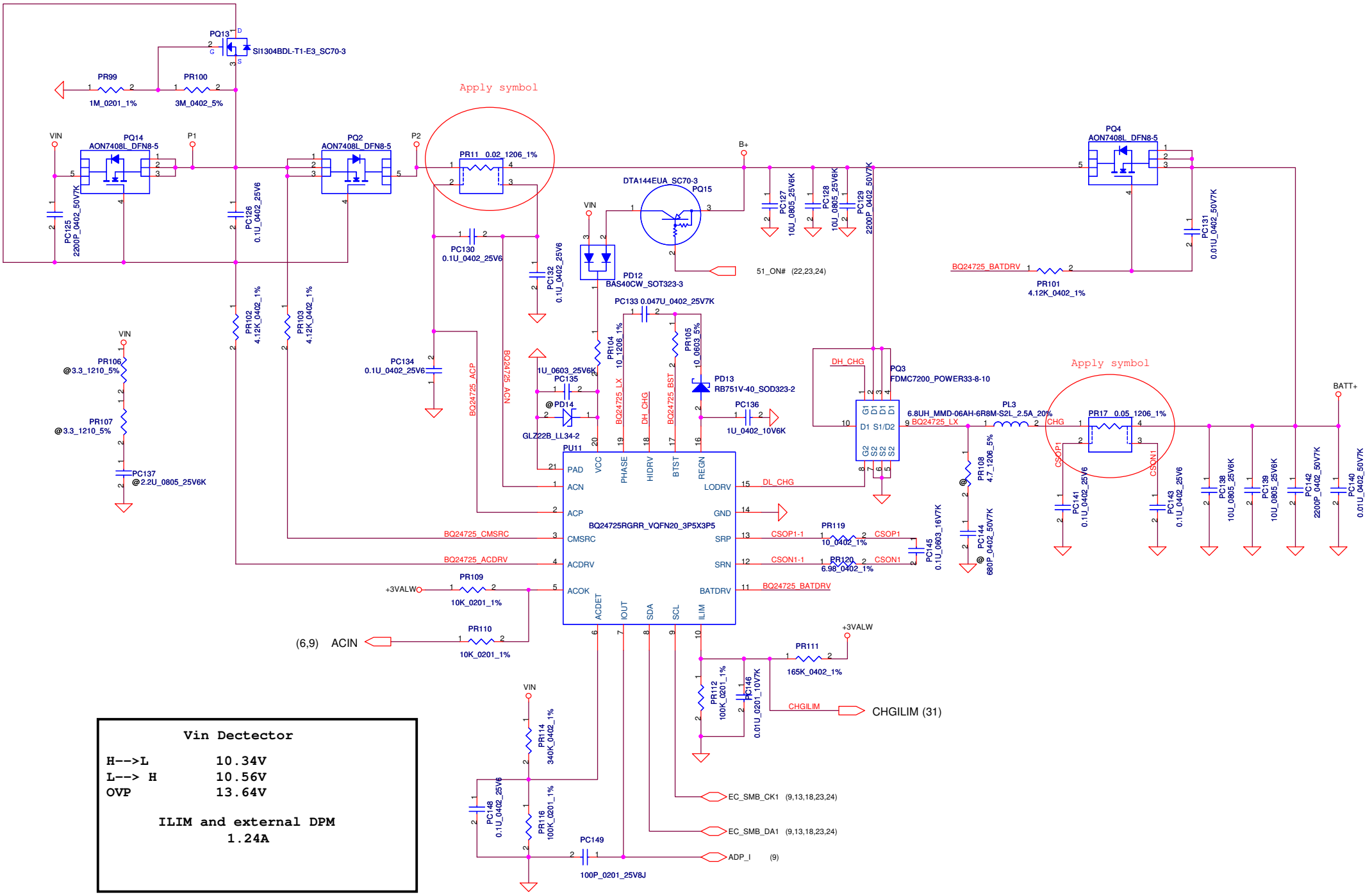

Vin Dectector

H-->L	10.34V
L--> H	10.56V
OVP	13.64V

ILIM and external DPM
1.24A

Security Classification	Compal Secret Data		
Issued Date	2010/01/25	Deciphered Date	2010/12/31

THIS SHEET OF ENGINEERING DRAWING IS THE PROPRIETARY PROPERTY OF COMPAL ELECTRONICS, INC. AND CONTAINS CONFIDENTIAL AND TRADE SECRET INFORMATION. THIS SHEET MAY NOT BE TRANSFERED FROM THE CUSTODY OF THE COMPETENT DIVISION OF R&D DEPARTMENT EXCEPT AS AUTHORIZED BY COMPAL ELECTRONICS, INC. NEITHER THIS SHEET NOR THE INFORMATION IT CONTAINS MAY BE USED BY OR DISCLOSED TO ANY THIRD PARTY WITHOUT PRIOR WRITTEN CONSENT OF COMPAL ELECTRONICS, INC.

Compal Electronics, Inc.

Title: PWR DCIN / Pre-charge

Size: Custom | Document Number: LA-7221P | Rev: 0.1

Date: Thursday, April 21, 2011 | Sheet 25 of 34

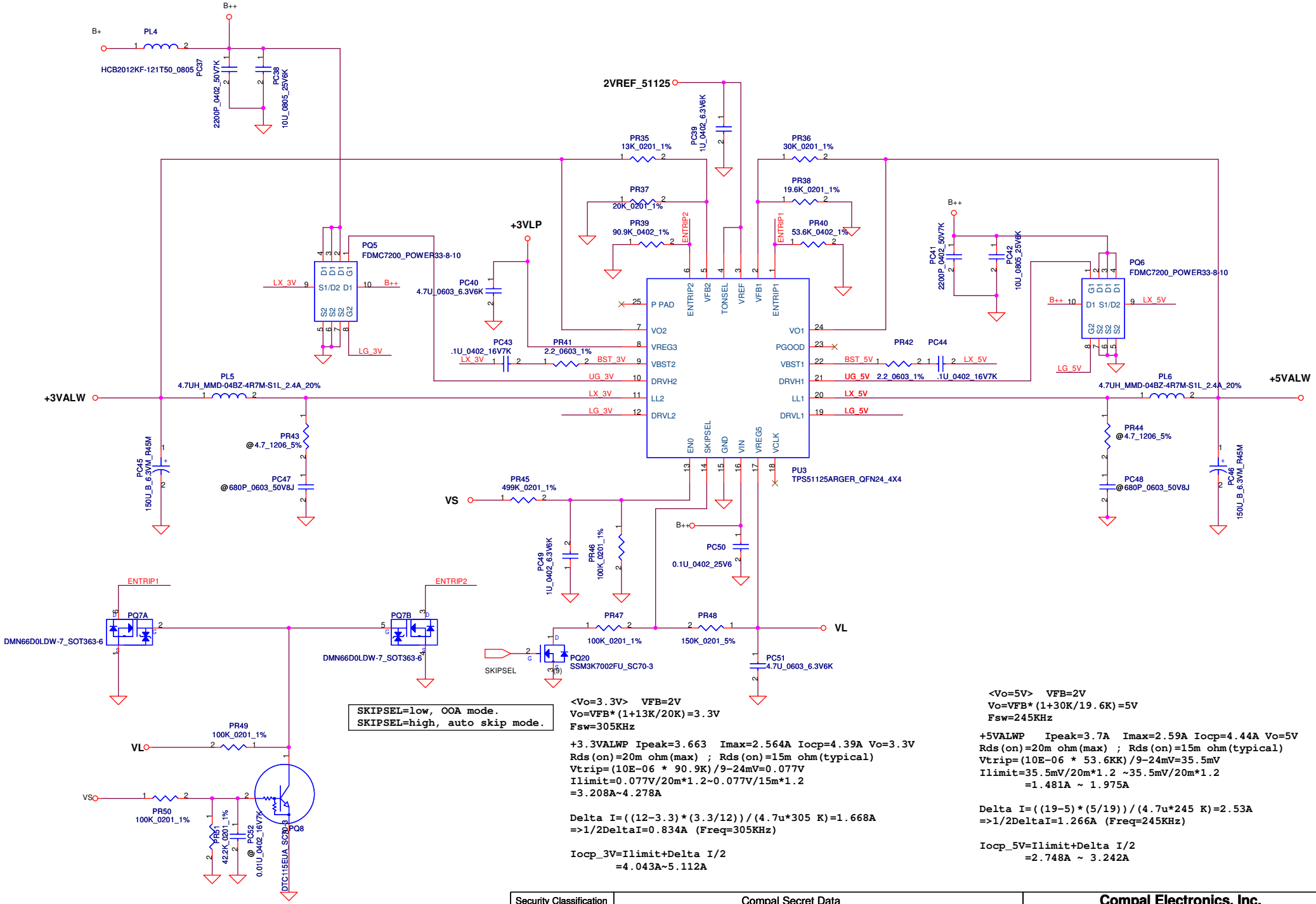

SKIPSEL=low, OOA mode.
SKIPSEL=high, auto skip mode.

<Vo=3.3V> VFB=2V
Vo=VFB*(1+13K/20K)=3.3V
Fsw=305KHz

+3.3VALWP Ipeak=3.663 Imax=2.564A Iocp=4.39A Vo=3.3V
Rds(on)=20m ohm(max) ; Rds(on)=15m ohm(typical)
Vtrip=(10E-06 * 90.9K)/9-24mV=0.077V
Ilimit=0.077V/20m*1.2~0.077V/15m*1.2
=3.208A~4.278A

Delta I=((12-3.3)*(3.3/12))/(4.7u*305 K)=1.668A
=>1/2DeltaI=0.834A (Freq=305KHz)

Iocp_3V=Ilimit+Delta I/2
=4.043A~5.112A

<Vo=5V> VFB=2V
Vo=VFB*(1+30K/19.6K)=5V
Fsw=245KHz

+5VALWP Ipeak=3.7A Imax=2.59A Iocp=4.44A Vo=5V
Rds(on)=20m ohm(max) ; Rds(on)=15m ohm(typical)
Vtrip=(10E-06 * 53.6KK)/9-24mV=35.5mV
Ilimit=35.5mV/20m*1.2 ~35.5mV/20m*1.2
=1.481A ~ 1.975A

Delta I=((19-5)*(5/19))/(4.7u*245 K)=2.53A
=>1/2DeltaI=1.266A (Freq=245KHz)

Iocp_5V=Ilimit+Delta I/2
=2.748A ~ 3.242A

Security Classification	Compal Secret Data			Compal Electronics, Inc.
Issued Date	2006/08/18	Deciphered Date	2008/09/20	Title: 3VALW_MBP/5VALWP
				Size: Custom; Document Number: LA-7251P; Rev: 0.1
				Date: Thursday, April 21, 2011; Sheet 26 of 34

THIS SHEET OF ENGINEERING DRAWING IS THE PROPRIETARY PROPERTY OF COMPAL ELECTRONICS, INC. AND CONTAINS CONFIDENTIAL AND TRADE SECRET INFORMATION. THIS SHEET MAY NOT BE TRANSFERED FROM THE CUSTODY OF THE COMPETENT DIVISION OF R&D DEPARTMENT EXCEPT AS AUTHORIZED BY COMPAL ELECTRONICS, INC. NEITHER THIS SHEET NOR THE INFORMATION IT CONTAINS MAY BE USED BY OR DISCLOSED TO ANY THIRD PARTY WITHOUT PRIOR WRITTEN CONSENT OF COMPAL ELECTRONICS, INC.

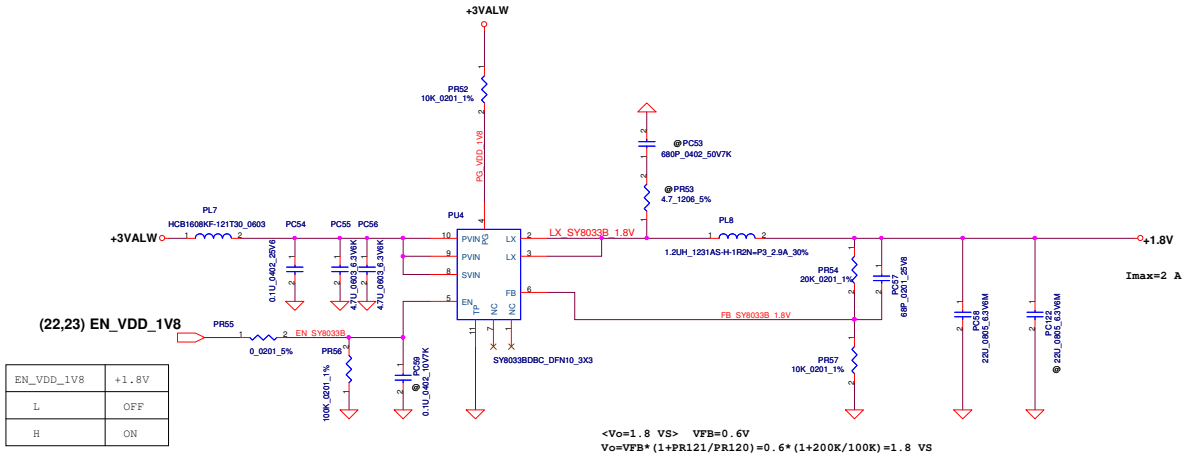

EN_VDD_1V8	+1.8V
L	OFF
H	ON

<Vo=1.8 VS> VFB=0.6V
Vo=VFB*(1+PR121/PR120)=0.6*(1+200K/100K)=1.8 VS

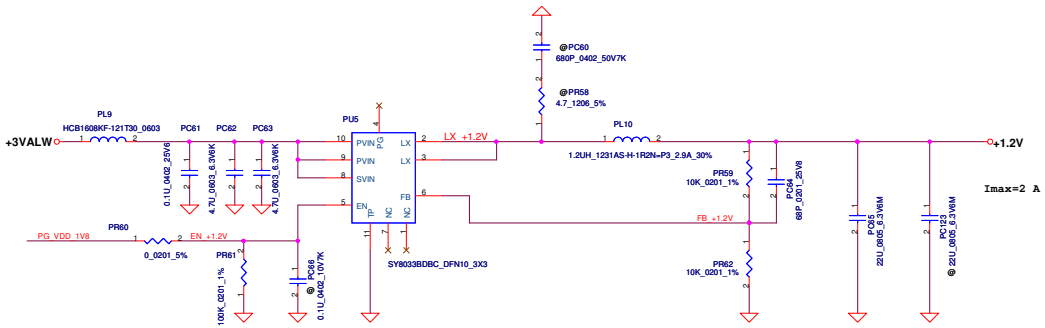

EN_+1.2V	+1.2V
L	OFF
H	ON

<Vo=1.2 VS> VFB=0.6V
Vo=VFB*(1+PR127/PR123)=0.6*(1+10K/10K)=1.2 VS

Security Classification	Compal Secret Data		
Issued Date	2006/08/18	Deciphered Date	2008/09/20

THIS SHEET OF ENGINEERING DRAWING IS THE PROPRIETARY PROPERTY OF COMPAL ELECTRONICS, INC. AND CONTAINS CONFIDENTIAL AND TRADE SECRET INFORMATION. THIS SHEET MAY NOT BE TRANSFERED FROM THE CUSTODY OF THE COMPETENT DIVISION OF R&D DEPARTMENT EXCEPT AS AUTHORIZED BY COMPAL ELECTRONICS, INC. NEITHER THIS SHEET NOR THE INFORMATION IT CONTAINS MAY BE USED BY OR DISCLOSED TO ANY THIRD PARTY WITHOUT PRIOR WRITTEN CONSENT OF COMPAL ELECTRONICS, INC.

Compal Electronics, Inc.

Title: **+1.8VS**

Size: Custom | Document Number: **LA-7251P** | Rev: 0.1

Date: Thursday, April 21, 2011 | Sheet 27 of 34

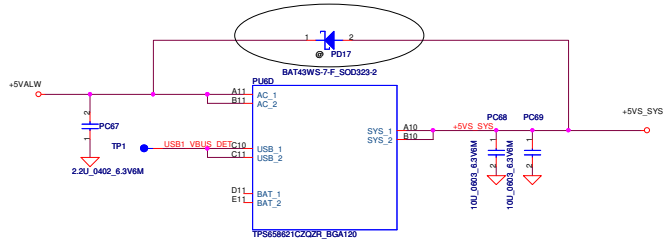

+VDD_SYS=5V
MAX current=1A

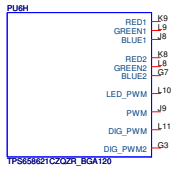

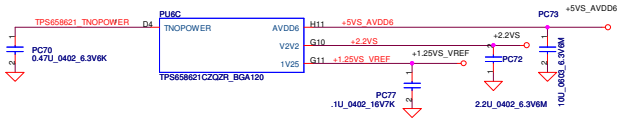

+VDD_AVDD6 =5V
MAX current=0.01A

+VDD_V2V2 =2.2V
MAX current=0.025A

+VDD_VREF1V25 =1.25V
MAX current=0.01A

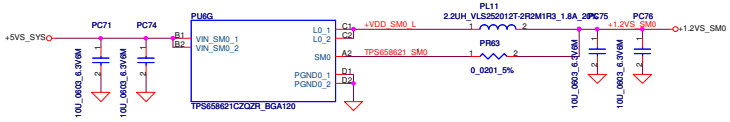

+VDD_SM0=1.2V
MAX current=0.6A

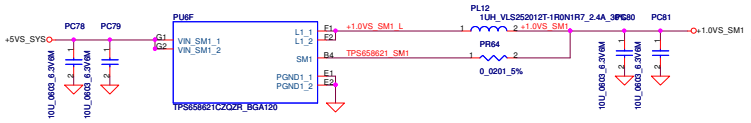

+VDD_SM1=1V
MAX current=1.5A

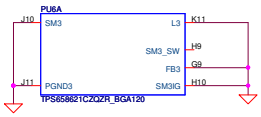

BOOST Converter

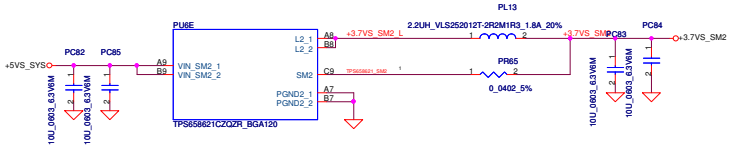

+VDD_SM2=3.7V
MAX current=0.75A

PMU #1

Security Classification	Compal Secret Data			Compal Electronics, Inc.
Issued Date	2006/08/18	Deciphered Date	2008/09/20	Title: PMU#1
				Size: Custom; Document Number: LA-7251P; Rev: 0.1
				Date: Thursday, April 21, 2011; Sheet 28 of 34

THIS SHEET OF ENGINEERING DRAWING IS THE PROPRIETARY PROPERTY OF COMPAL ELECTRONICS, INC. AND CONTAINS CONFIDENTIAL AND TRADE SECRET INFORMATION. THIS SHEET MAY NOT BE TRANSFERED FROM THE CUSTODY OF THE COMPETENT DIVISION OF R&D DEPARTMENT EXCEPT AS AUTHORIZED BY COMPAL ELECTRONICS, INC. NEITHER THIS SHEET NOR THE INFORMATION IT CONTAINS MAY BE USED BY OR DISCLOSED TO ANY THIRD PARTY WITHOUT PRIOR WRITTEN CONSENT OF COMPAL ELECTRONICS, INC.

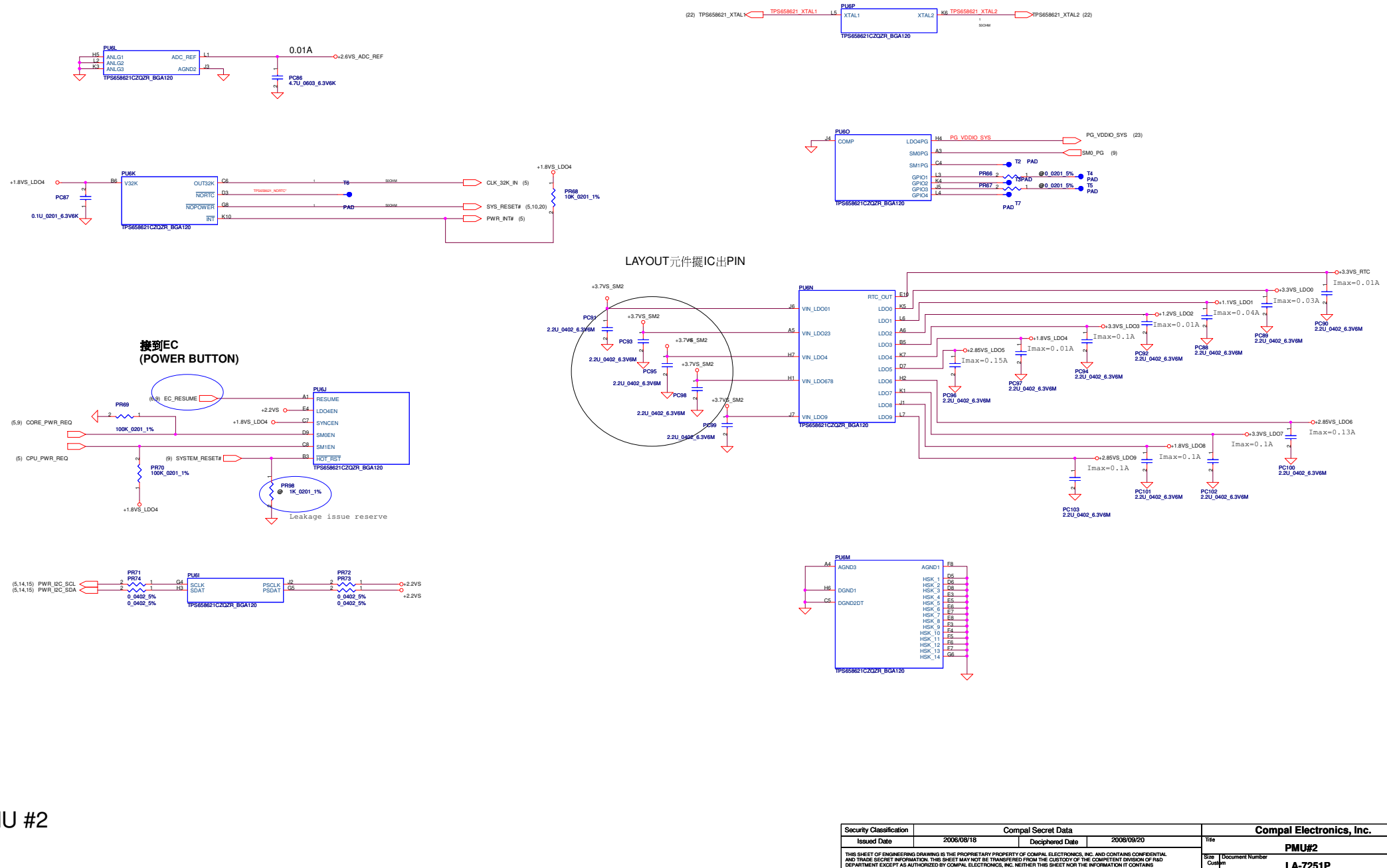

PMU #2

Security Classification	Compal Secret Data		
Issued Date	2006/08/18	Deciphered Date	2008/09/20

THIS SHEET OF ENGINEERING DRAWING IS THE PROPRIETARY PROPERTY OF COMPAL ELECTRONICS, INC. AND CONTAINS CONFIDENTIAL AND TRADE SECRET INFORMATION. THIS SHEET MAY NOT BE TRANSFERED FROM THE CUSTODY OF THE COMPETENT DIVISION OF R&D DEPARTMENT EXCEPT AS AUTHORIZED BY COMPAL ELECTRONICS, INC. NEITHER THIS SHEET NOR THE INFORMATION IT CONTAINS MAY BE USED BY OR DISCLOSED TO ANY THIRD PARTY WITHOUT PRIOR WRITTEN CONSENT OF COMPAL ELECTRONICS, INC.

Compal Electronics, Inc.

Title: **PMU#2**

Size: Custom | Document Number: **LA-7251P** | Rev: 0.1

Date: Thursday, April 21, 2011 | Sheet 29 of 34

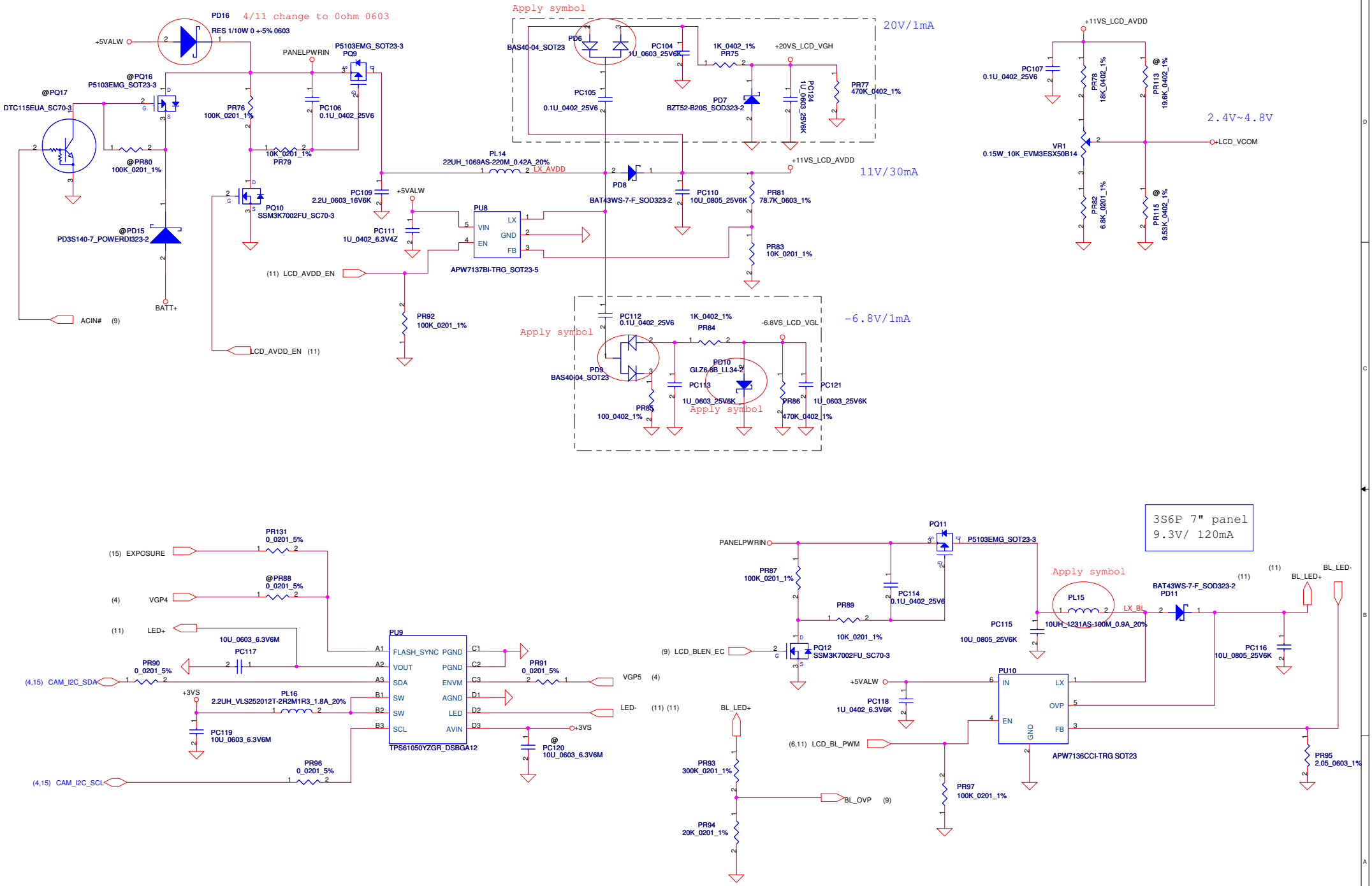

Security Classification	Compal Secret Data		
Issued Date	2010/07/30	Deciphered Date	2011/07/30

THIS SHEET OF ENGINEERING DRAWING IS THE PROPRIETARY PROPERTY OF COMPAL ELECTRONICS, INC. AND CONTAINS CONFIDENTIAL AND TRADE SECRET INFORMATION. THIS SHEET MAY NOT BE TRANSFERED FROM THE CUSTODY OF THE COMPETENT DIVISION OF R&D DEPARTMENT EXCEPT AS AUTHORIZED BY COMPAL ELECTRONICS, INC. NEITHER THIS SHEET NOR THE INFORMATION IT CONTAINS MAY BE USED BY OR DISCLOSED TO ANY THIRD PARTY WITHOUT PRIOR WRITTEN CONSENT OF COMPAL ELECTRONICS, INC.

Compal Electronics, Inc.

Title: LCD POWER/LED FLASH

Size: Custom | Document Number: LA-7251P | Rev: 0.1

Date: Thursday, April 21, 2011 | Sheet 30 of 34

0 degree C protect, 5 degree C recovery.
50 degree C protect, 45 degree C recovery.

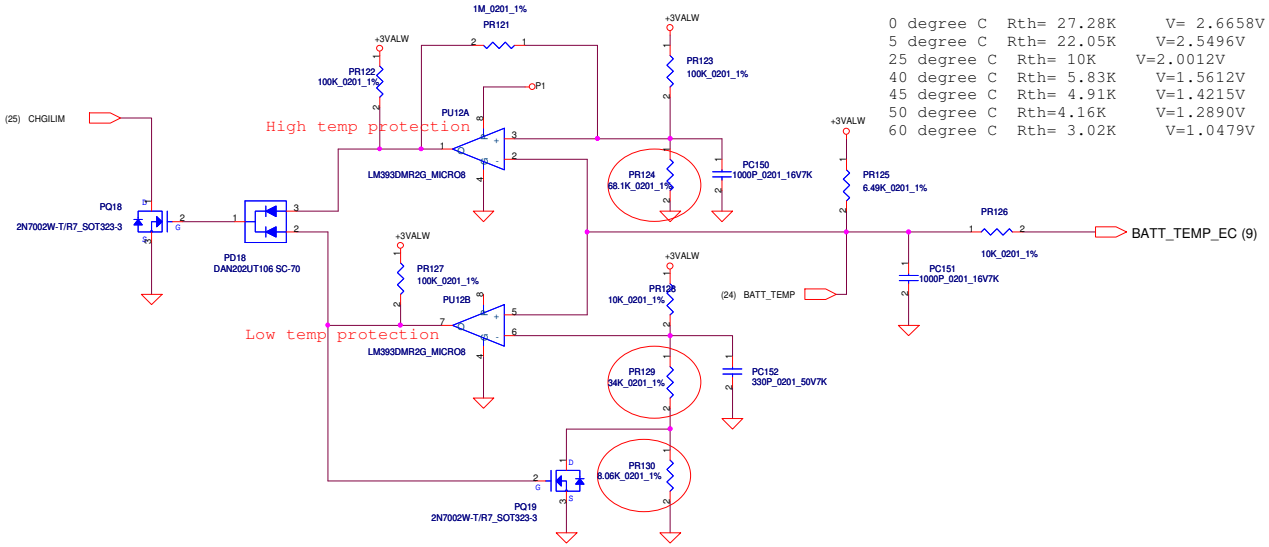

0 degree C	Rth= 27.28K	V= 2.6658V	
5 degree C	Rth= 22.05K	V=2.5496V	
25 degree C	Rth= 10K	V=2.0012V	
40 degree C	Rth= 5.83K	V=1.5612V	
45 degree C	Rth= 4.91K	V=1.4215V	
50 degree C	Rth=4.16K	V=1.2890V	
60 degree C	Rth= 3.02K	V=1.0479V	

Security Classification	Compal Secret Data			Compal Electronics, Inc.
Issued Date	2008/12/22	Deciphered Date	2009/12/22	Title
				Size C / Document Number / Rev 0.1
				Date: Thursday, April 21, 2011 / Sheet 31 of 34

THIS SHEET OF ENGINEERING DRAWING IS THE PROPRIETARY PROPERTY OF COMPAL ELECTRONICS, INC. AND CONTAINS CONFIDENTIAL AND TRADE SECRET INFORMATION. THIS SHEET MAY NOT BE TRANSFERED FROM THE CUSTODY OF THE COMPETENT DIVISION OF R&D DEPARTMENT EXCEPT AS AUTHORIZED BY COMPAL ELECTRONICS, INC. NEITHER THIS SHEET NOR THE INFORMATION IT CONTAINS MAY BE USED BY OR DISCLOSED TO ANY THIRD PARTY WITHOUT PRIOR WRITTEN CONSENT OF COMPAL ELECTRONICS, INC.

Version change list (P.I.R. List)

Item	Fixed Issue	Reason for change	Rev.	PG#	Modify List	Date	Phase
1	Add 1000p to prevent noise coupling at battery TS pin.	Add 1000p to prevent noise coupling at battery TS pin.	0.1	25	Add 1000P_0201_16V at PC153.	2010/11/30	Before EVT
2	Modify HW charger OTP recovert point.	Change OTP setting, 45 degree C protect and 40 degree C recovery.	0.1	25	Change PR115 from 6.81K_0402_1% to 30.9K_0402_1%	2010/11/30	Before EVT
3	Prevent battery reverse and damage the charger IC.	Follow FAE's suggestion, add resistors before SRN and SRP.	0.1	25	Add 10_0402_1% at PR119. Add 6.98_0402_1% at PR120.	2010/11/30	Before EVT
4	Apply new PN for PD10.	Apply new PN for PD10.	0.1	30	Change PD10 from GLZ5.1B to GLZ6.8B.	2010/11/30	Before EVT
5	Modify +3VALWP OCP design	Modify +3VALWP OCP design	0.1	26	Change PR39 from 53.6K_0402_1% to 100K_0402_1%	2010/12/07	Before EVT
6	Design change	Modify BQ24725 schematic	0.1	25	Change PR120 from 6.81_0402_1% to 6.98_0402_1%	2010/12/07	Before EVT
7	Change to common PN	Change to common PN	0.1		Change PC9,PC104,PC113,PC121,PC124 from SE000009R80 to SE000006900	2010/12/07	Before EVT
8	Change to common PN	Change to common PN	0.1		Change PC50,PC107 from SE00000G8N0 to SE00000G880	2010/12/07	Before EVT
9	Change to common PN	Change to common PN	0.1		Change PC38,PC42,PC110,PC115,PC116 from SE00000QKN0 to SE00000QK00	2010/12/07	Before EVT
10	For common part	PD1 3A SMA diode SCS00001I80 shortage issue	0.1	24	Change PD1 from SCS00001I80 to SCS00000W00	2010/12/07	Before EVT
11	For common part	Change BL choke to common PN	0.2	30	Change PL15 from SH00000B200(1127AS) to SH00000MX00(1231AS)	2010/12/30	EVT
12	For common part	Change cap PN to common PN	0.2	25	Change PC136 from SE000000U00(1u_0402_16V) to SE00000QL10(1u_0402_10v)	2010/12/30	EVT
13	Raise VGH voltage from 18V to 20V.	Raise VGH voltage from 18V to 20V.	0.2	30	Change PD7 zener diode from LLZ20A(18V) to GLZ22B(20V)	2010/12/30	EVT
14	For common part	Change diode PN to common PN	0.2	30	Change PD6,PD9 diode fromBAT54S-7-F to BAS40-04	2010/12/30	EVT
15	For common part	Change CSR PN to common PN	0.2	25	Change PR17 0.05_1206_1% from SD00000S700 to SD00000CI10	2010/12/30	EVT
16	Prevent EC pin damage when BL_OVP	Modify voltage dividor resistor	0.2	30	Change PR94 from 30K to 20K.	2010/12/30	EVT
17	Increase panel power input doide	Increase panel power input doide	0.2	30	Change PD15 and PD16 to PD3S140.	2010/12/30	EVT
18	Charger CP close to IC max value.	Charger CP setting near IC max value, vendor suggest change inpur CSR value lower.	0.2	25	Change PR11 from 50m ohm to 20m ohm.	2010/12/30	EVT
19	Modify charger OTP circuit	Modify it for high and low temp sense.	0.2	25	Delete PU12, PC147, PC153, PR113, PR115 and add PU12,PD18, PQ18,PQ19,PR121,PR122,PR123,PR124,PR125,PR126,PR127,PR128, PR129,PR130,PC150,PC151,PC152.	2010/12/30	EVT
20	Improve TI thermal shutdown issue	From vendor's suggestion, change PC77 from 1u to 0.1u	0.2	28	change PC77 from 1u to 0.1u	2010/12/30	EVT
21	For common part	Change cap PN to common PN	0.2	31	PC150 & PC151 change from SE00000TG00 (1000P_0201_50V7K) to common part SE000007U80 (1000P 16V K X7R 0201)	2011/01/10	EVT
22	For ESD part	Change to include ESD dioed	0.2	30	PQ10 & PQ12 change from SB000006800 (S TR 2N7002W T/R7 1N SOT-323) to SB000009610 (S TR SSM3K7002FU 1N SC70-3)	2011/01/10	EVT
23	For LED flash issue	modify LED flash schematic	0.2a	30	Add net EXPOSURE & add PR131(0_0201_5%) Change PR88 to non-mount	2011/01/11	EVT
24	Modify panel power sequence	Modify panel power sequence	0.2a	30	PR75 change from SD034100180(S RES 1/16W 1K +-1% 0402) to SD034300280(S RES 1/16W 30K +-1% 0402)	2011/01/27	DVT
25	Modify panel power sequence	Modify panel power sequence	0.2a	30	PR84 change from SD034300180(S RES 1/16W 3K +-1% 0402) to SD034100180(S RES 1/16W 1K +-1% 0402)	2011/01/27	DVT
26	Reduce negative current during CC mode to CP mode.	Reduce negative current during CC mode to CP mode.	0.2a	25	Change PC145 from SE000006S80(S CER CAP 2.2U 16V K X5R 0603) to SE026104K80(S CER CAP .1U 16V K X7R 0603)	2011/01/27	DVT
27	For common part	Vendor not support SC2N202U0T4(S DIO DAN202U)	0.3	31	Change PD18 from SC2N202U0T4(S DIO DAN202U) to SC2N202U010 (S DIO DAN202UT106 SC-70)	2011/02/10	PVT
28	Add limit current resistor	Add limit current resistor	0.3	24	Add PR12 (S RES 1/10W 20 +-1% 0603)	2011/02/17	PVT
29							
30							
31							

Security Classification	Compal Secret Data			Compal Electronics, Inc.
Issued Date	2006/08/18	Deciphered Date	2008/09/20	Title: PIR-PWR-1
				Size: C / Document Number: LA-7251P / Rev: 1.0
				Date: Tuesday, April 12, 2011 / Sheet 32 of 34

THIS SHEET OF ENGINEERING DRAWING IS THE PROPRIETARY PROPERTY OF COMPAL ELECTRONICS, INC. AND CONTAINS CONFIDENTIAL AND TRADE SECRET INFORMATION. THIS SHEET MAY NOT BE TRANSFERED FROM THE CUSTODY OF THE COMPETENT DIVISION OF R&D DEPARTMENT EXCEPT AS AUTHORIZED BY COMPAL ELECTRONICS, INC. NEITHER THIS SHEET NOR THE INFORMATION IT CONTAINS MAY BE USED BY OR DISCLOSED TO ANY THIRD PARTY WITHOUT PRIOR WRITTEN CONSENT OF COMPAL ELECTRONICS, INC.

EVT

<2010/10/05>

P04 - DEL R211
P05 - DEL R179
P06 - R109 Change to 0-ohm
ADD NET: USB1_ID
DEL NET: DAP_MCLK1_FM2018
DEL R97
ADD R1348, R1349, R1350, R1351
P09 - ADD R1352 For IR_INT
ADD NET: USB1_ID, IR_INT
P11 - Change U150 package
P12 - C1414, C1415, C1416, C1419 Change to 5600p
DEL R1223, R1221, R1220
P13 - DEL R1250
ADD R1389, R1390, R1391, R1392
P14 - ADD R1394, R1395
P15 - DEL R136, R139, R140, R143, R144
P17 - DEL R1307, R1344
P19 - Modify USB circuit
P23 - DEL R148

<2010/10/08>

P04 - R36, R39 Change package size to 0201(2.2K SD00000TH00)
R117, R1022, R112 Change package size to 0201(100K)
R11 Change package size to 0201(10K)
P05 - R45, R46, R226, R48 Change package size to 0201
P06 - R54, R57, R110, R111, R114, R1348, R1349, R1350, R1351 Change package size to 0201
P08 - R460, 461 Change package size to 0402
P09 - R1161, R1174 Change package size to 0402
R1352 Change package size to 0201
NET: IR_INT Change to IRDA_INT
P11 - R1405 Change package size to 0201
R1208, R1209 Change package size to 0402
P12 - R1224, R1225, R1147, R1145, R1144, R1148, R1059 Change package size to 0402
R1299, R181 Change package size to 0201
P13 - C1375, C1372, C1376, C1373, C1133, C1135 Change package size to 0402
P14 - R1301, R1 Change package size to 0402
R1394, R1395, R1296 Change package size to 0201
P15 - R1292, R23, R37, R44, R47, R52 Change package size to 0201
P16 - R28 Change package size to 0402
R1401 Change package size to 0201
P17 - R1157, R1158 Change package size to 0402
P18 - R1368, R1374, R1388, R1370, R1365, R1385, R1356, R1375 Change package size to 0201
P19 - R1393, R1406, R1172 Change package size to 0201
D30 NET Change to +USB_VOUT
P22 - C598, C603, R67 Change package size to 0402
R859, R860 Change package size to 0201

<2010/10/12>

P16 - Add R1407 for DOCK_DET_R#
Add R1408, Q58 for HEAD_R_DET#

<2010/10/15>

P04 - Add NET: LS_EN#, I2C_RST
P09 - Add NET: EC_OE_OFF
P18 - R1376, R1359, R1373, R1358, R1363, R1382 Change package size to 0201
R519, R520 mount
Update JHDMI connector
P19 - Del U151, C1463, C1464, R1406
P20 - Del R50, R53, R55, R60
P21 - Del R1202~R1209
Updata Power Schematic

<2010/10/21>

P11 - C121(4.7uF) Change package size to 0603
P16 - DEL U133
P19 - C121(4.7uF) Change package size to 0603
ADD Q59
P23 - ADD U3, U5

<2010/11/01>

P04 - NET: HDMI_HPD_R change to HDMI_HPD_SRC
P15 - CAM2_OE pull down(High active for 2M camera)
P19 - ADD U151, U152, R1411, C1464

<2010/11/03>

P04 - ADD NET: DOCK_ON
P09 - ADD NET: HDMI_HPD, HDMI_HPD2, DOCK_ON
P11 - Modify U97 package to S023-5
Modify JP58(Touch Panel) Library
P12 - Modify JP55 Library
P13 - Modify internal MIC Library
P16 - Modify SW6 Library
P18 - DEL R1377, R1378, R1409
Modify U109 package to S023-5
P19 - Modify U97 package to S023-5

<2010/11/05>

P16 - Modify JP12(Docking) Library
P19 - Modify JP70(Micro USB) Library
Update power circuit

<2010/11/08>

P04 - DEL R931, C1217
P09 - ADD R1412~R1419 and Q59, Q60
P10 - ADD R1420
P11 - ADD D31 for LED Flash
P12 - ADD R1421~R1425 and C1465, C1466
P13 - ADD JMIC1, JMIC2, R1426~R1430 for DMIC
P15 - DEL 5M Camera circuit
P17 - ADD RF switch circuit
P18 - ADD R1439
P22 - DEL Power Button circuuit
P23 - DEL P-Sensor circuuit

<2010/11/09>

P15 - Update JP2 Pin arrangement
P17 - Remove RF switch circuit to IO board
P22 - Add Power Button circuit

<2010/11/15>

P04 - DEL NET: DOCK_ON
Change NET: PROX_INT# to P_INT#
P05 - ADD NET: DOCK_ON, IR_INT, Home_POUT, Home_LED_ON
ADD R1444~R1446, R1449, D32
P06 - Change R109 to 10K-ohm
Change NET: USB1_ID to +AVDD_USB
P09 - DEL R1177~R1179
DEL NET: USB1_ID, DOCK_DET_L#, SLEEP_MODE
ADD NET: POUT, IR_INT, FM2018_EN, P_INT#
P11 - Change NET: LED- to BL_LED-, LED+ to BL_LED+
Change JP58 Pin arrangement
P12 - Swap D5, D6
P13 - Remove MIC circuit
P15 - Change NET: +5VALW to +3VALW
P16 - DEL R1407, R72
P17 - Swap L50
P18 - Change L91~L94 to SM070001S00
Swap L93, L94 for layout
P19 - Change JP70 library
ADD R1447, R1448
P23 - ADD JP72 for Home Key

<2010/11/17> By Harry

P12- add C54/C55/R245/R246
P12 - add R182(Head_DET#) pull-high on MB

<2010/11/18> By Harry

update Power schematic

<2010/11/22> By Harry

Page9 add EC ESB BUS

<2011/02/11>

P14 - ADD R1522
Update power circuit

<2011/02/18>

P09 - ADD R1528
P12 - ADD Q64~Q66, R1523~R1527
DEL R1495, R1498
P16 - ADD C1484
Update power circuit

<2011/03/03>

P09 - change R1417 to 33K-ohm(Board ID)
P12 - Q64~Q66 change to SB00000BS00
R1496 change to 25.5K-ohm
R1500 change to 46.4K-ohm
P16 - mount: U149, C1452~C1457, R1396, R1398, R1404 for 3G SKU
P18 - nu-mount: R1363, R1382, R1357, R1362
mount: R1372, R1354, R1367
change R1496 to 422-ohm
change R1373, R1358 to 47K-ohm
P23 - change JP73.1 NET to +3VALW
nu-mount: Q61, R1479, R1480

<2011/03/08>

P03 - modify I2C address table
P05 - R1444 change to 3G@
P09 - modify board ID table
P12 - Change R245, R246 to 9.1-ohm for 3G@
P14 - nu-mount U132
P15 - nu-mount: R1513
mount: R1514
P16 - Change R1470, R1472 to 600-ohm at 100MHz for 3G@
P19 - nu-mount: C1433, C1450

<2011/04/28>

P05 - Change R1444 to SD028100280

Security Classification	Compal Secret Data		
Issued Date	2011/4/1	Deciphered Date	2008/09/20

THIS SHEET OF ENGINEERING DRAWING IS THE PROPRIETARY PROPERTY OF COMPAL ELECTRONICS, INC. AND CONTAINS CONFIDENTIAL AND TRADE SECRET INFORMATION. THIS SHEET MAY NOT BE TRANSFERED FROM THE CUSTODY OF THE COMPETENT DIVISION OF R&D DEPARTMENT EXCEPT AS AUTHORIZED BY COMPAL ELECTRONICS, INC. NEITHER THIS SHEET NOR THE INFORMATION IT CONTAINS MAY BE USED BY OR DISCLOSED TO ANY THIRD PARTY WITHOUT PRIOR WRITTEN CONSENT OF COMPAL ELECTRONICS, INC.

Compal Electronics, Inc.

Title: **PIR-HW-1**

Size: Custom | Document Number: **LA-7251P** | Rev: 1.0

Date: Thursday, April 28, 2011 | Sheet 33 of 34

PBJ30(VanGogh) I2C Routing

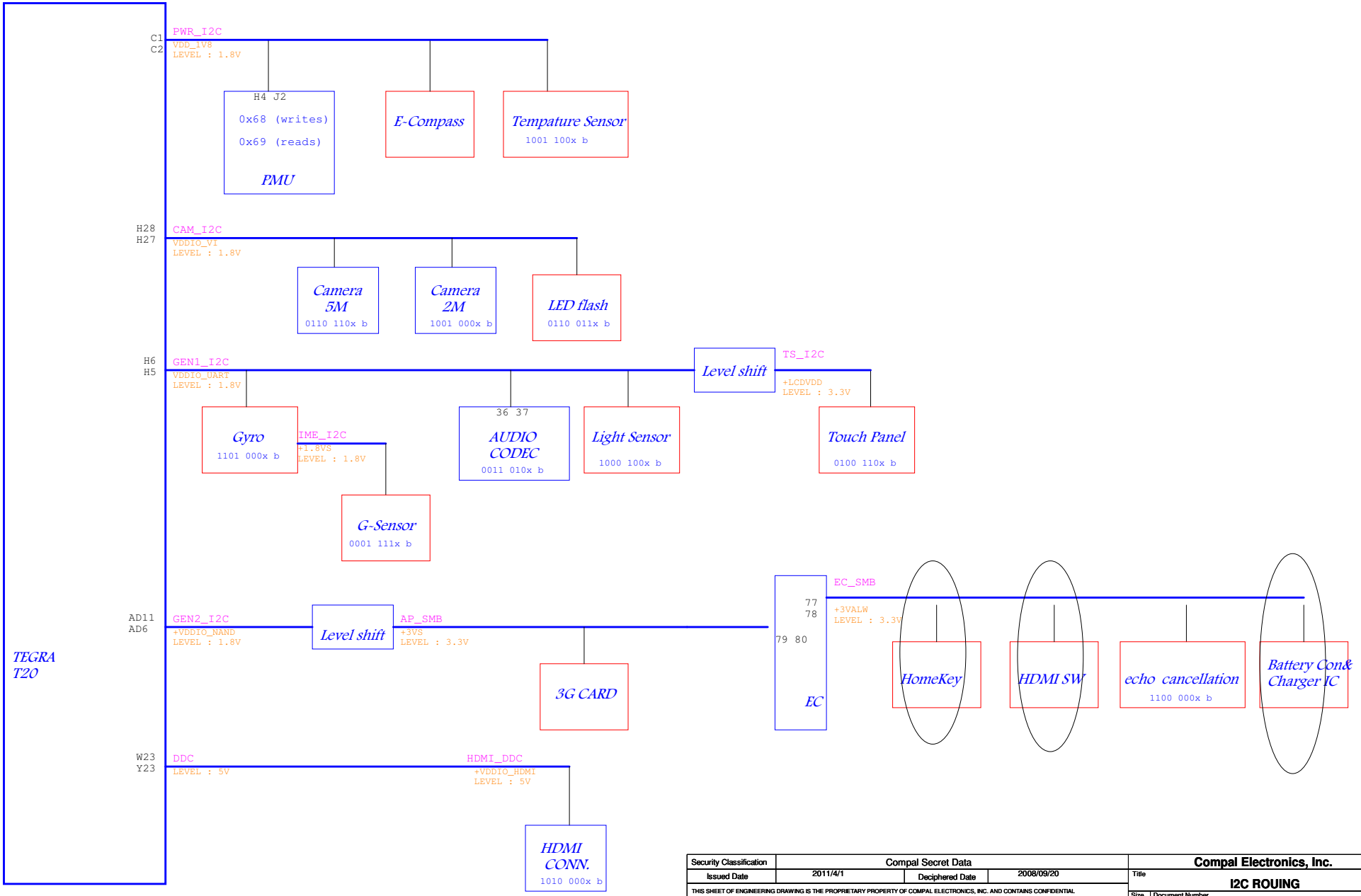

Security Classification	Compal Secret Data			Compal Electronics, Inc.
Issued Date	2011/4/1	Deciphered Date	2008/09/20	Title: I2C ROUING
				Size: C; Document Number: LA-7251P; Rev: 1.0
				Date: Tuesday, April 12, 2011; Sheet 34 of 34

THIS SHEET OF ENGINEERING DRAWING IS THE PROPRIETARY PROPERTY OF COMPAL ELECTRONICS, INC. AND CONTAINS CONFIDENTIAL AND TRADE SECRET INFORMATION. THIS SHEET MAY NOT BE TRANSFERED FROM THE CUSTODY OF THE COMPETENT DIVISION OF R&D DEPARTMENT EXCEPT AS AUTHORIZED BY COMPAL ELECTRONICS, INC. NEITHER THIS SHEET NOR THE INFORMATION IT CONTAINS MAY BE USED BY OR DISCLOSED TO ANY THIRD PARTY WITHOUT PRIOR WRITTEN CONSENT OF COMPAL ELECTRONICS, INC.

www.s-manuals.com