QFKAA

Yosemite 10FG

LA-8391P REV 1.0 Schematic

Intel Processor(Ivy Bridge / Sandy Bridge)
PCH(Panther Point)
2012-02-02 Rev 1.0

Security Classification	Compal Secret Data			Compal Electronics, Inc.
Issued Date	2011/12/14	Deciphered Date	2012/12/31	Title: SCHEMATICS, MB A8391
				Size: Custom / Document Number: 4019HG / Rev: B
				Date: Thursday, February 16, 2012 / Sheet 1 of 61

THIS SHEET OF ENGINEERING DRAWING IS THE PROPRIETARY PROPERTY OF COMPAL ELECTRONICS, INC. AND CONTAINS CONFIDENTIAL AND TRADE SECRET INFORMATION. THIS SHEET MAY NOT BE TRANSFERED FROM THE CUSTODY OF THE COMPETENT DIVISION OF R&D DEPARTMENT EXCEPT AS AUTHORIZED BY COMPAL ELECTRONICS, INC. NEITHER THIS SHEET NOR THE INFORMATION IT CONTAINS MAY BE USED BY OR DISCLOSED TO ANY THIRD PARTY WITHOUT PRIOR WRITTEN CONSENT OF COMPAL ELECTRONICS, INC.

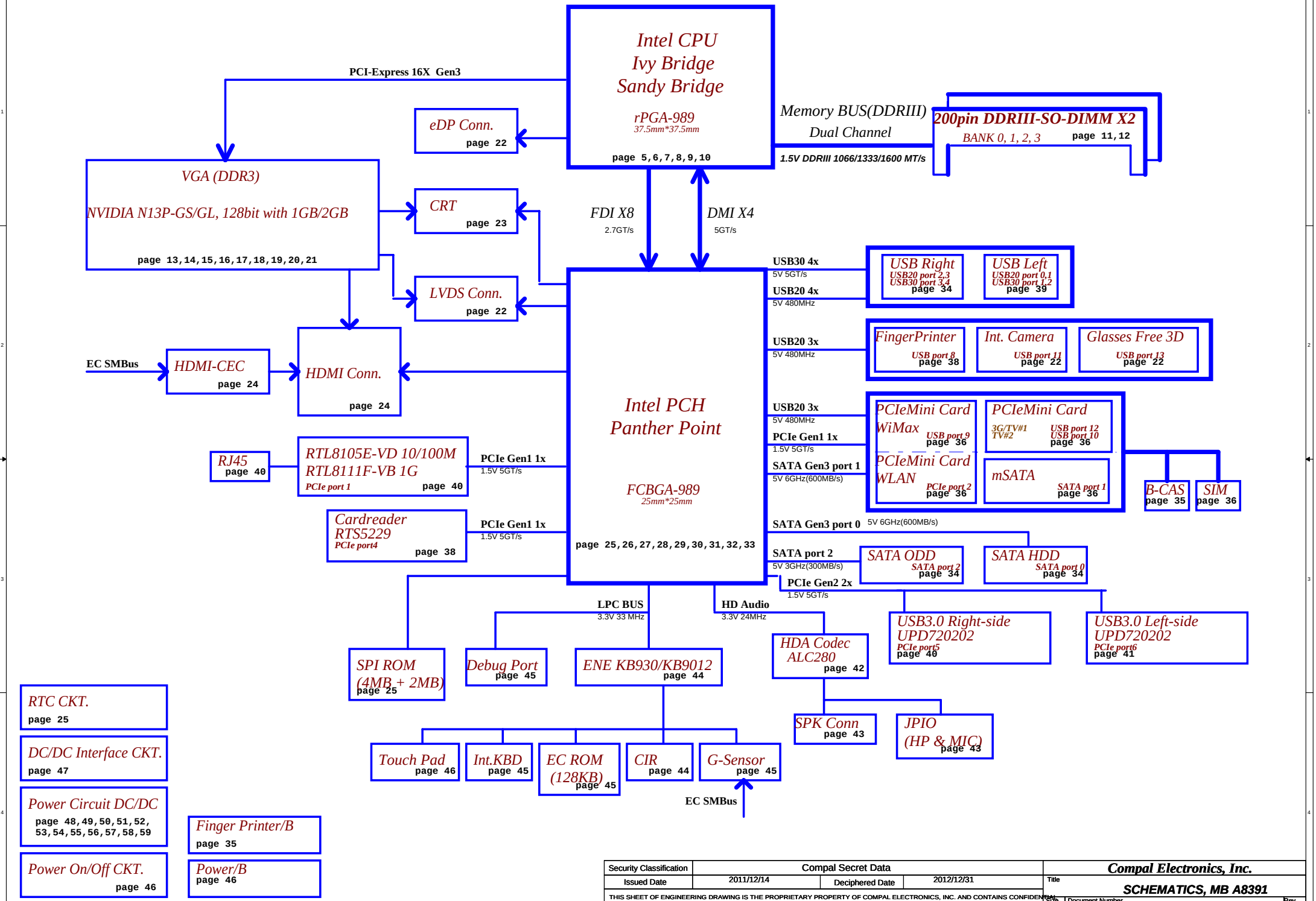

Security Classification	Compal Secret Data			Compal Electronics, Inc.
Issued Date	2011/12/14	Deciphered Date	2012/12/31	Title: SCHEMATICS, MB A8391
				Size: Document Number: 4019HG — Rev B
				Date: Thursday, February 16, 2012 — Sheet 2 of 61

THIS SHEET OF ENGINEERING DRAWING IS THE PROPRIETARY PROPERTY OF COMPAL ELECTRONICS, INC. AND CONTAINS CONFIDENTIAL AND TRADE SECRET INFORMATION. THIS SHEET MAY NOT BE TRANSFERED FROM THE CUSTODY OF THE COMPETENT DIVISION OF R&D DEPARTMENT EXCEPT AS AUTHORIZED BY COMPAL ELECTRONICS, INC. NEITHER THIS SHEET NOR THE INFORMATION IT CONTAINS MAY BE USED BY OR DISCLOSED TO ANY THIRD PARTY WITHOUT PRIOR WRITTEN CONSENT OF COMPAL ELECTRONICS, INC.

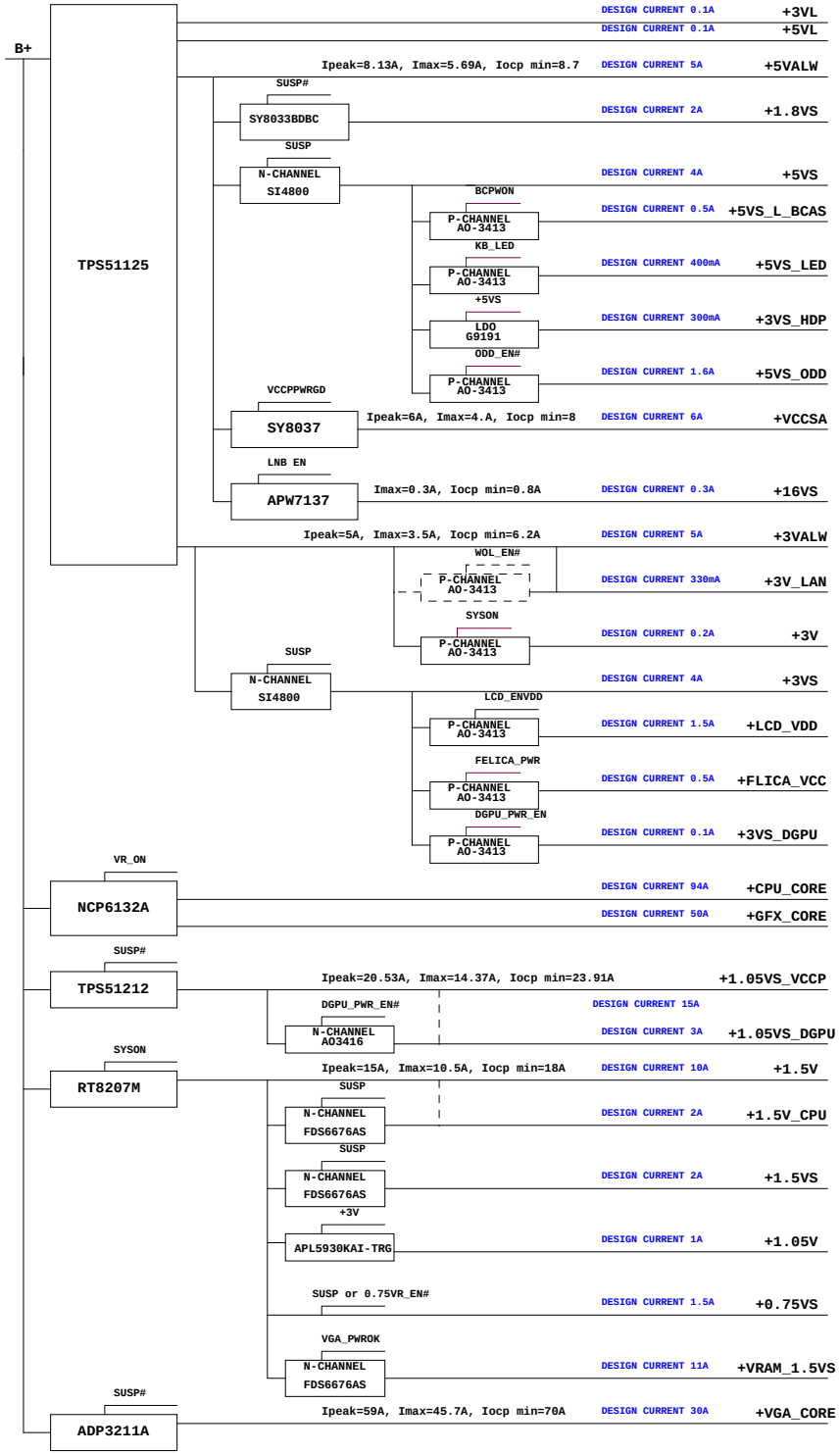

Security Classification	Compal Secret Data		
Issued Date	2011/12/14	Deciphered Date	2012/12/31

THIS SHEET OF ENGINEERING DRAWING IS THE PROPRIETARY PROPERTY OF COMPAL ELECTRONICS, INC. AND CONTAINS CONFIDENTIAL AND TRADE SECRET INFORMATION. THIS SHEET MAY NOT BE TRANSFERED FROM THE CUSTODY OF THE COMPETENT DIVISION OF R&D DEPARTMENT EXCEPT AS AUTHORIZED BY COMPAL ELECTRONICS, INC. NEITHER THIS SHEET NOR THE INFORMATION IT CONTAINS MAY BE USED BY OR DISCLOSED TO ANY THIRD PARTY WITHOUT PRIOR WRITTEN CONSENT OF COMPAL ELECTRONICS, INC.

Compal Electronics, Inc.

Title: **SCHEMATICS, MB A8391**

Size: | Document Number: **4019HG** | Rev: B

Date: Thursday, February 16, 2012 | Sheet 3 of 61

Voltage Rails

(O MEANS ON X MEANS OFF)

power plane / State	+RTCVCC	B+	+5VL +3VL	+5VALW +3VALW +VSB	+1.5V	+5VS +3VS +1.8VS +1.5VS +1.05VS +0.75VS +CPU_CORE +VGA_CORE +GFX_CORE +VTT +VRAM_1.5VS +3VS_DGPU +1.05VS_DGPU
S0	O	O	O	O	O	O
S1	O	O	O	O	O	O
S3	O	O	O	O	O	X
S5 S4/AC	O	O	O	O	X	X
S5 S4/ Battery only	O	O	O	X	X	X
S5 S4/AC & Battery don't exist	O	X	X	X	X	X

Platform	SKU	CPU	PCH	VGA
Calpella	Discrete (DIS@)	Clarksfield/ Arrandale	HM76@/HM77@	N13PGSR1@/N13PGLR1@
	Optimus (OPT@)	Arrandale	HM76@/HM77@	N13PGSR1@/N13PGLR1@

BTO Option Table

Function	HDMI				CPU		
description	HDMI				Arrandale	Clarksfield	
explain	UMA	Discrete/ Optimus	COMMON	CEC	Arrandale	Clarksfield	Clarksfield with S3 Power Saving
BTO	IHDMI@	DHDMI@	HDMI@	CEC@	M1@	M3@	PSM3@

Function	MINI PCI-E SLOT			LAN		Fingerprint	CIR	KB Light
description	SLOT2		SLOT1	LAN		Fingerprint	CIR	KB Light
explain	3G	TV Tuner	WIMAX	10/100M	Giga	Fingerprint	CIR	KB Light
BTO	3G@	TV@	WIMAX@	8105E@	8111E@	FP@	CIR@	KBL@

Function	G-SENSOR	SKU		LVDS				Camera & Mic
description	G-SENSOR	SKU		2D HD/FHD Panel		2D HD eDP	3D Panel	Camera & Mic
explain	G-SENSOR	Discrete	Optimus	Optimus		Optimus	Discrete	Camera & Mic
BTO	GSENSOR@	DIS@	OPT@	LVDS2D@	OPTFHD@	IEDP@	3D@	CAM@

Function	GPU		
description	N13P-GS	N13P-GL	
explain	N13PGS	N13PGL	
BTO	N13PGSR1@	N13PGLR1@	

PCH SM Bus Address

Power	Device	HEX	Address
+3VS	DDR SO-DIMM 0	A0 H	1010 0000 b
+3VS	DDR SO-DIMM 1	A4 H	1010 0100 b
+3VS	WLAN/WIMAX		
+3VS	3G		

EC SM Bus1 Address

Power	Device	HEX	Address
+3VL	Smart Battery	16 H	0001 0110 b
+3VL	HDMI-CEC	34 H	0011 0100 b

Power	Device	HEX	Address
+3VL	Cap. Sensor		Virtual I2C

EC SM Bus2 Address

Power	Device	HEX	Address
+3VS	PCH	96 H	1001 0110 b
+3VS	NVIDIA GPU	9E H	1001 1010 b
+3VS	G-Sensor	40 H	0100 0000 b

STATE / SIGNAL	SLP_S3#	SLP_S4#	SLP_S5#
Full ON	HIGH	HIGH	HIGH
S1(Power On Suspend)	HIGH	HIGH	HIGH
S3 (Suspend to RAM)	LOW	HIGH	HIGH
S4 (Suspend to Disk)	LOW	LOW	HIGH
S5 (Soft OFF)	LOW	LOW	LOW
G3	LOW	LOW	LOW

Security Classification	Compal Secret Data		Compal Electronics, Inc.
Issued Date	2011/12/14	Deciphered Date 2012/12/31	Title SCHEMATICS, MB A8391
			Size Custom / Document Number 4019HG / Rev B
			Date: Thursday, February 16, 2012 / Sheet 4 of 61

THIS SHEET OF ENGINEERING DRAWING IS THE PROPRIETARY PROPERTY OF COMPAL ELECTRONICS, INC. AND CONTAINS CONFIDENTIAL AND TRADE SECRET INFORMATION. THIS SHEET MAY NOT BE TRANSFERED FROM THE CUSTODY OF THE COMPETENT DIVISION OF R&D DEPARTMENT EXCEPT AS AUTHORIZED BY COMPAL ELECTRONICS, INC. NEITHER THIS SHEET NOR THE INFORMATION IT CONTAINS MAY BE USED BY OR DISCLOSED TO ANY THIRD PARTY WITHOUT PRIOR WRITTEN CONSENT OF COMPAL ELECTRONICS, INC.

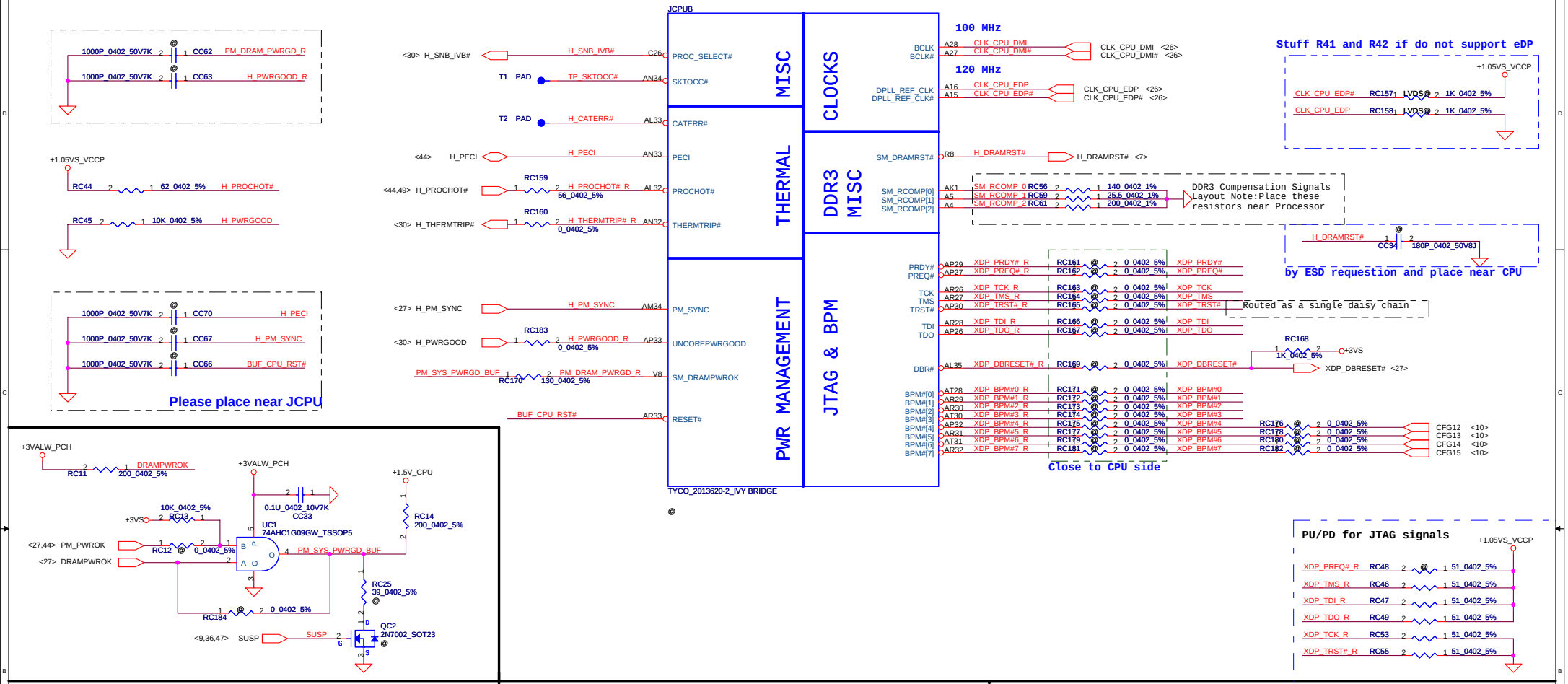

Buffered Reset to CPU

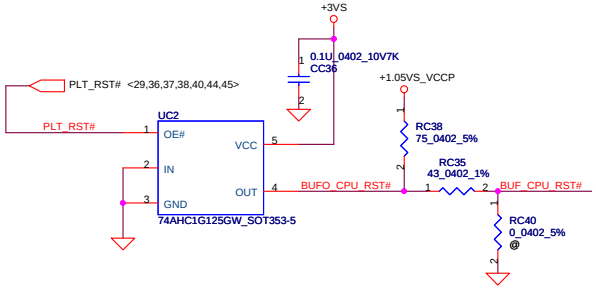

XDP Connector

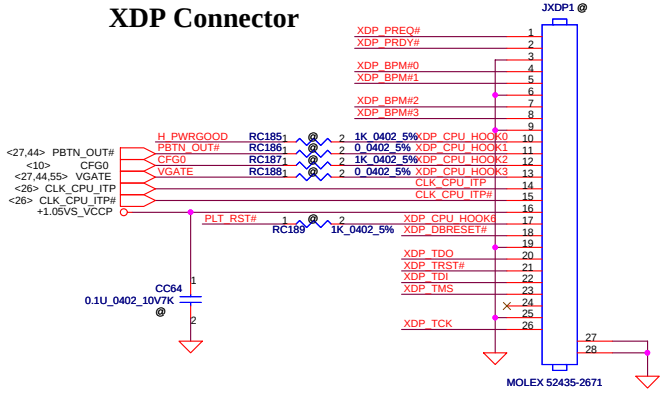

FAN Control Circuit

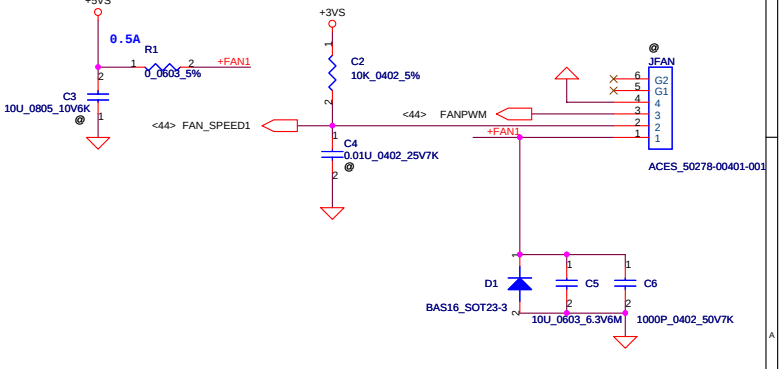

Security Classification	Compal Secret Data			Compal Electronics, Inc.
Issued Date	2011/12/14	Deciphered Date	2012/12/31	Title: SCHEMATICS, MB A8391

THIS SHEET OF ENGINEERING DRAWING IS THE PROPRIETARY PROPERTY OF COMPAL ELECTRONICS, INC. AND CONTAINS CONFIDENTIAL AND TRADE SECRET INFORMATION. THIS SHEET MAY NOT BE TRANSFERED FROM THE CUSTODY OF THE COMPETENT DIVISION OF R&D DEPARTMENT EXCEPT AS AUTHORIZED BY COMPAL ELECTRONICS, INC. NEITHER THIS SHEET NOR THE INFORMATION IT CONTAINS MAY BE USED BY OR DISCLOSED TO ANY THIRD PARTY WITHOUT PRIOR WRITTEN CONSENT OF COMPAL ELECTRONICS, INC.

Size	Document Number	Rev
Custom	4019HG	B

Date: Thursday, February 16, 2012 | Sheet 5 of 61

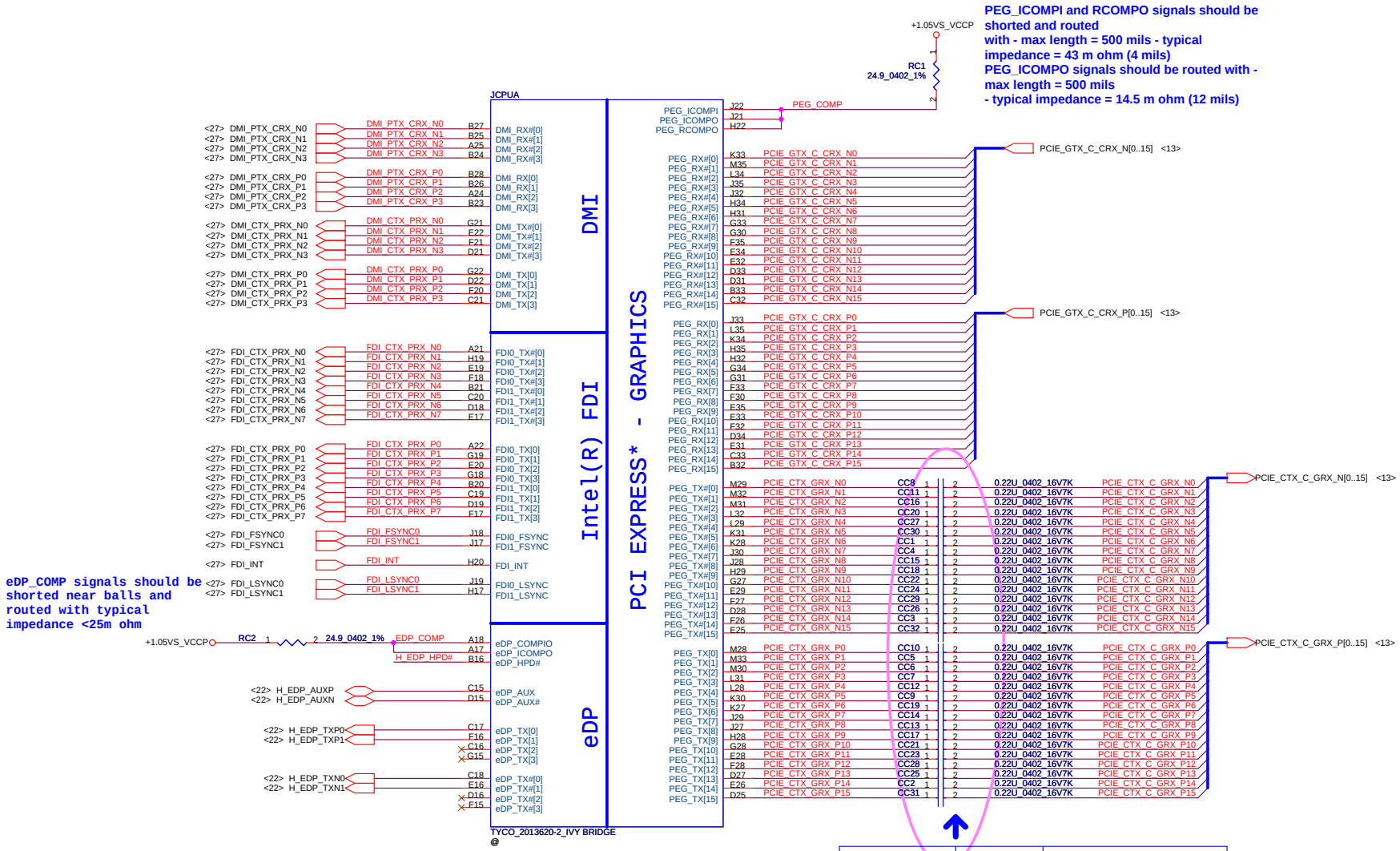

	PEG	DG suggest AC cap
IVY Bridge	Gen1/Gen2	75 nF~265 nF
	Gen3	180 nF~265 nF
SANDY Bridge	Gen1/Gen2	180 nF~265 nF
NV N13X	Gen1/2/3	Suggest 220 nF

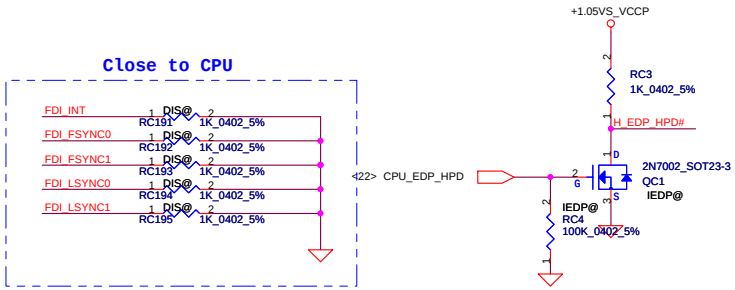

Security Classification	Compal Secret Data			Compal Electronics, Inc.
Issued Date	2011/12/14	Deciphered Date	2012/12/31	Title: SCHEMATICS, MB A8391
				Size: Custom; Document Number: 4019HG; Rev: B
				Date: Thursday, February 16, 2012; Sheet 6 of 61

THIS SHEET OF ENGINEERING DRAWING IS THE PROPRIETARY PROPERTY OF COMPAL ELECTRONICS, INC. AND CONTAINS CONFIDENTIAL AND TRADE SECRET INFORMATION. THIS SHEET MAY NOT BE TRANSFERRED FROM THE CUSTODY OF THE COMPETENT DIVISION OF R&D DEPARTMENT EXCEPT AS AUTHORIZED BY COMPAL ELECTRONICS, INC. NEITHER THIS SHEET NOR THE INFORMATION IT CONTAINS MAY BE USED BY OR DISCLOSED TO ANY THIRD PARTY WITHOUT PRIOR WRITTEN CONSENT OF COMPAL ELECTRONICS, INC.

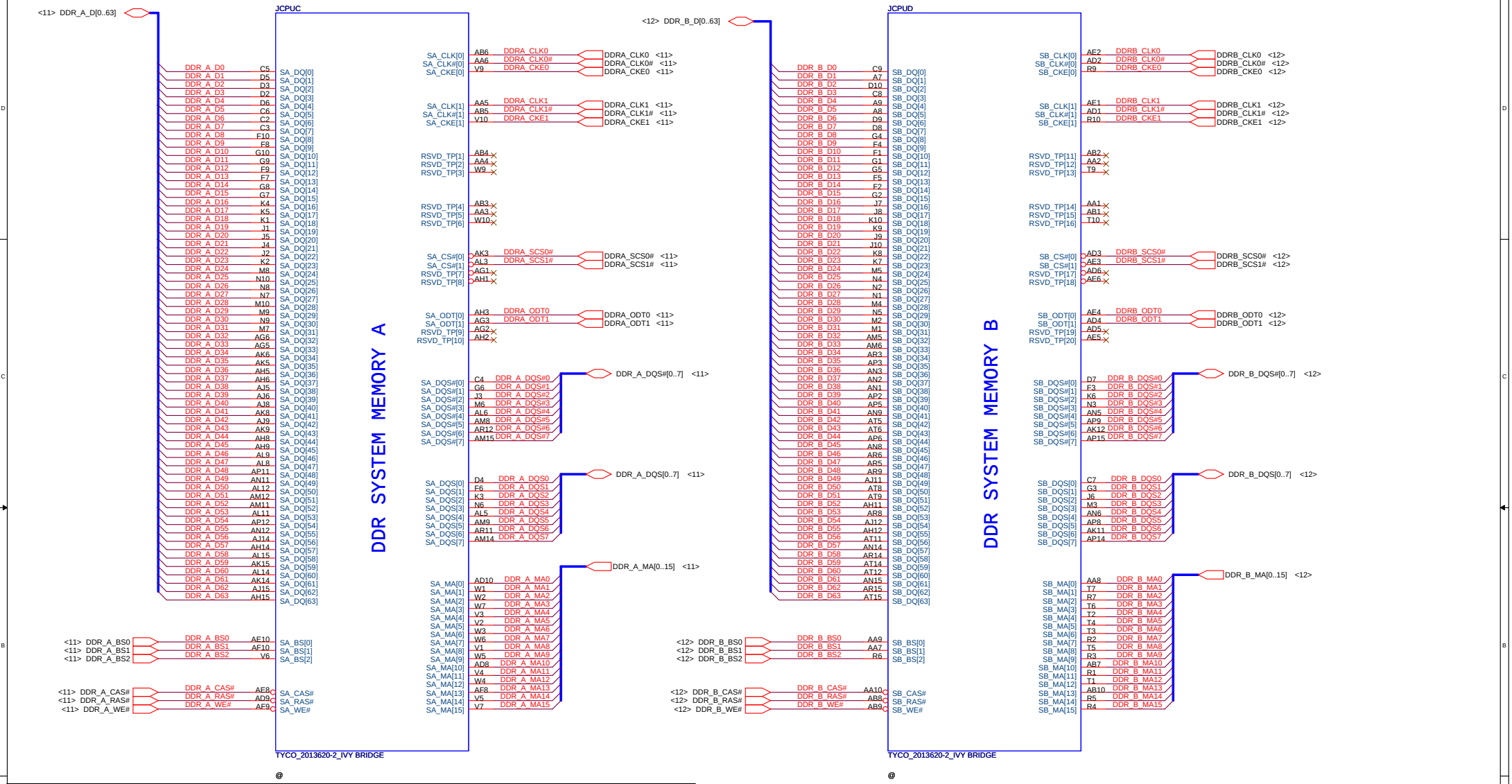

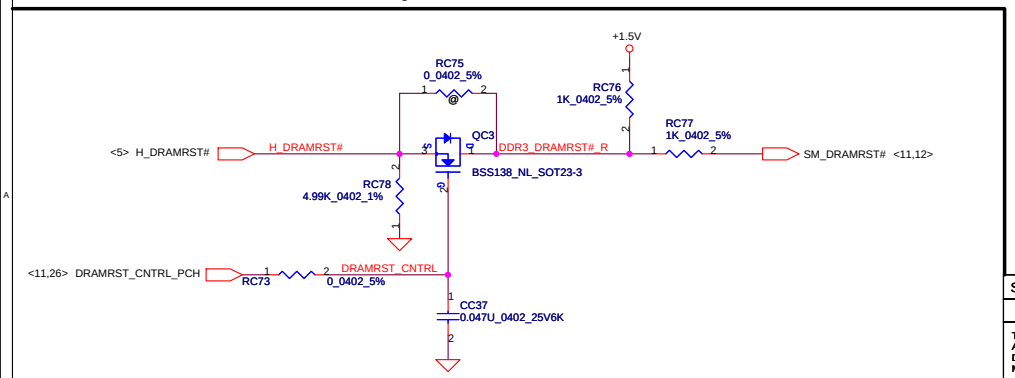

Security Classification	Compal Secret Data			Compal Electronics, Inc.
Issued Date	2011/12/14	Deciphered Date	2012/12/31	Title: SCHEMATICS, MB A8391
				Size: Custom; Document Number: 4019HG; Rev: B
				Date: Thursday, February 16, 2012; Sheet 7 of 61

THIS SHEET OF ENGINEERING DRAWING IS THE PROPRIETARY PROPERTY OF COMPAL ELECTRONICS, INC. AND CONTAINS CONFIDENTIAL AND TRADE SECRET INFORMATION. THIS SHEET MAY NOT BE TRANSFERED FROM THE CUSTODY OF THE COMPETENT DIVISION OF R&D DEPARTMENT EXCEPT AS AUTHORIZED BY COMPAL ELECTRONICS, INC. NEITHER THIS SHEET NOR THE INFORMATION IT CONTAINS MAY BE USED BY OR DISCLOSED TO ANY THIRD PARTY WITHOUT PRIOR WRITTEN CONSENT OF COMPAL ELECTRONICS, INC.

POWER

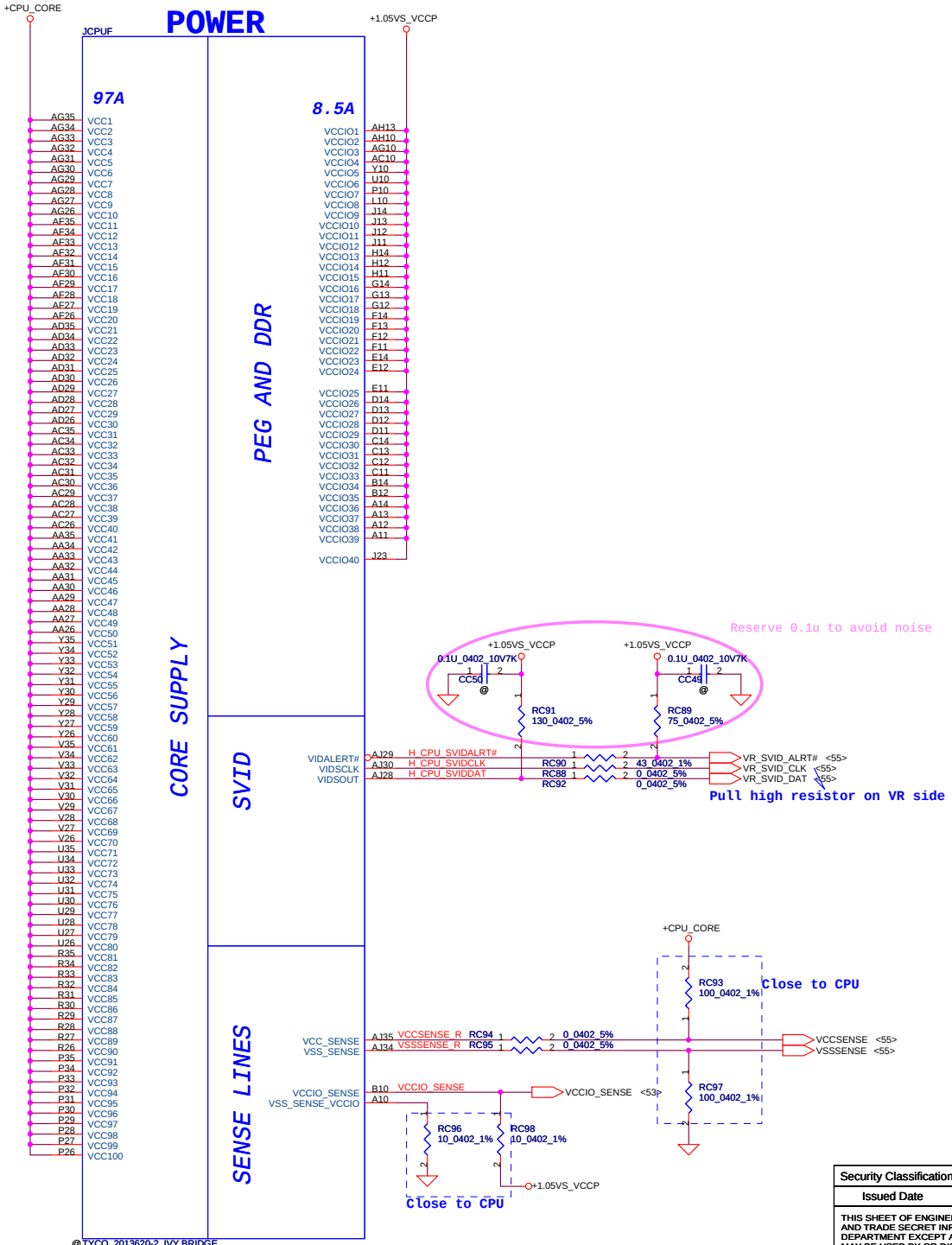

@TYCO_2013620-2_IVY BRIDGE

Security Classification	Compal Secret Data		
Issued Date	2011/12/14	Deciphered Date	2012/12/31

THIS SHEET OF ENGINEERING DRAWING IS THE PROPRIETARY PROPERTY OF COMPAL ELECTRONICS, INC. AND CONTAINS CONFIDENTIAL AND TRADE SECRET INFORMATION. THIS SHEET MAY NOT BE TRANSFERED FROM THE CUSTODY OF THE COMPETENT DIVISION OF R&D DEPARTMENT EXCEPT AS AUTHORIZED BY COMPAL ELECTRONICS, INC. NEITHER THIS SHEET NOR THE INFORMATION IT CONTAINS MAY BE USED BY OR DISCLOSED TO ANY THIRD PARTY WITHOUT PRIOR WRITTEN CONSENT OF COMPAL ELECTRONICS, INC.

Compal Electronics, Inc.

Title: ***SCHEMATICS, MB A8391***

Size: Custom | Document Number: **4019HG** | Rev: B

Date: Thursday, February 16, 2012 | Sheet 8 of 61

POWER

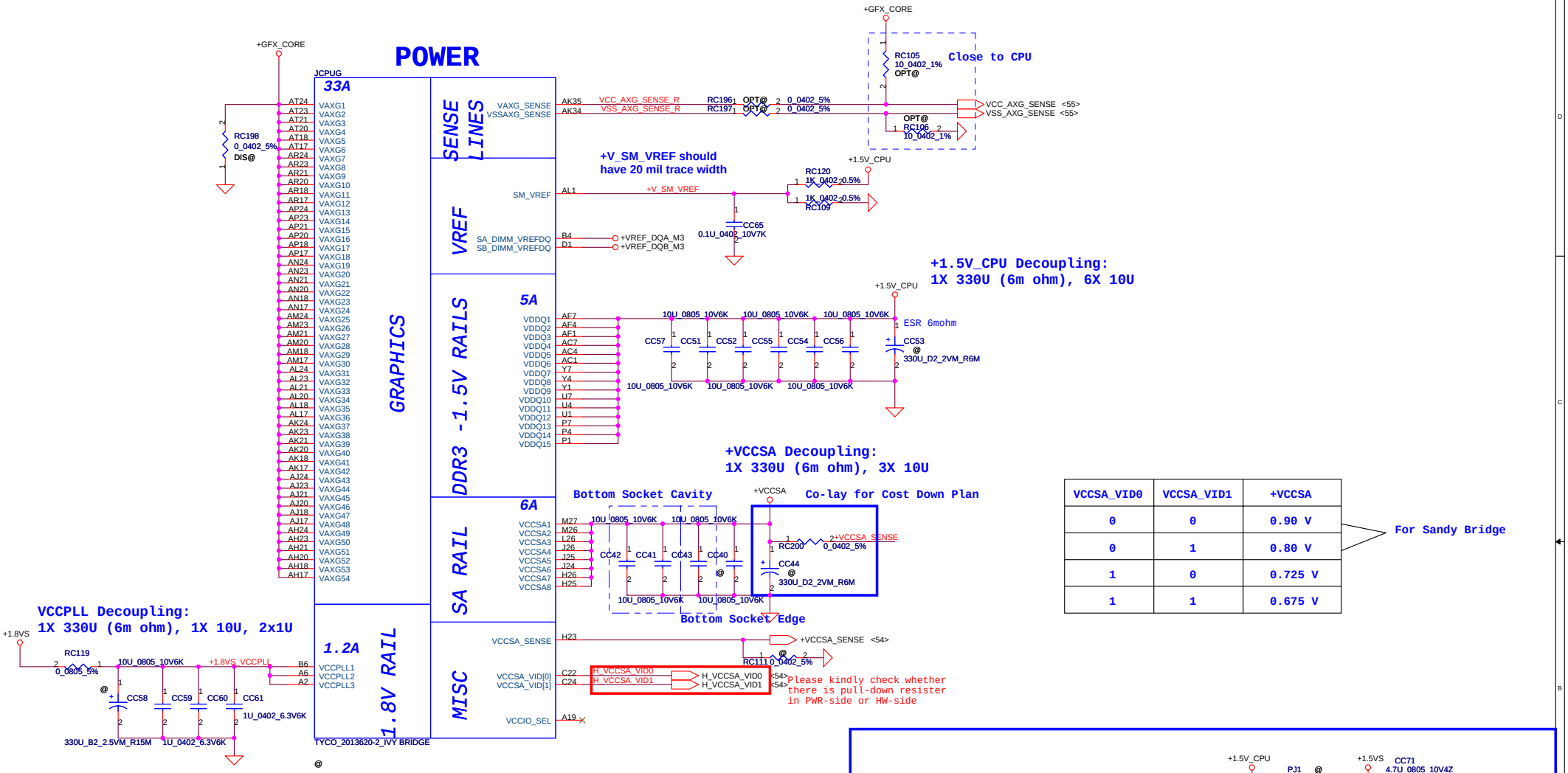

VCCSA_VID0	VCCSA_VID1	+VCCSA
0	0	0.90 V
0	1	0.80 V
1	0	0.725 V
1	1	0.675 V

For Sandy Bridge

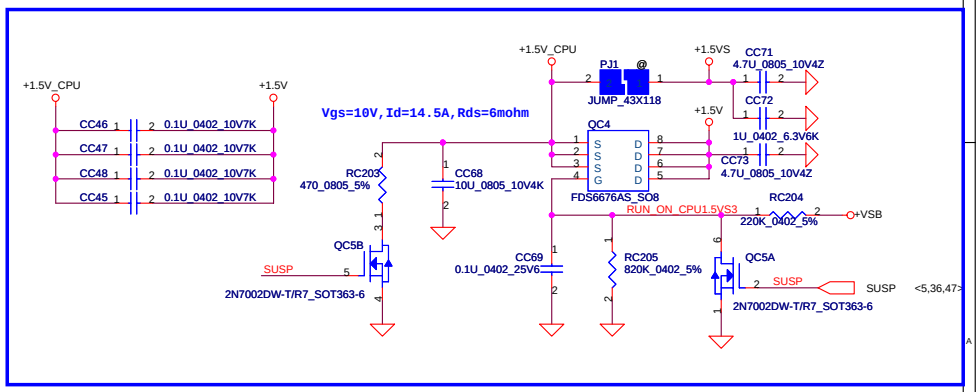

Security Classification	Compal Secret Data		
Issued Date	2011/12/14	Deciphered Date	2012/12/31

THIS SHEET OF ENGINEERING DRAWING IS THE PROPRIETARY PROPERTY OF COMPAL ELECTRONICS, INC. AND CONTAINS CONFIDENTIAL AND TRADE SECRET INFORMATION. THIS SHEET MAY NOT BE TRANSFERED FROM THE CUSTODY OF THE COMPETENT DIVISION OF R&D DEPARTMENT EXCEPT AS AUTHORIZED BY COMPAL ELECTRONICS, INC. NEITHER THIS SHEET NOR THE INFORMATION IT CONTAINS MAY BE USED BY OR DISCLOSED TO ANY THIRD PARTY WITHOUT PRIOR WRITTEN CONSENT OF COMPAL ELECTRONICS, INC.

Compal Electronics, Inc.

Title: ***SCHEMATICS, MB A8391***

Size: Custom | Document Number: **4019HG** | Rev: B

Date: Thursday, February 16, 2012 | Sheet 9 of 61

CFG Straps for Processor

(CFG[17:0] internal pull high 5~15K to VCCIO)

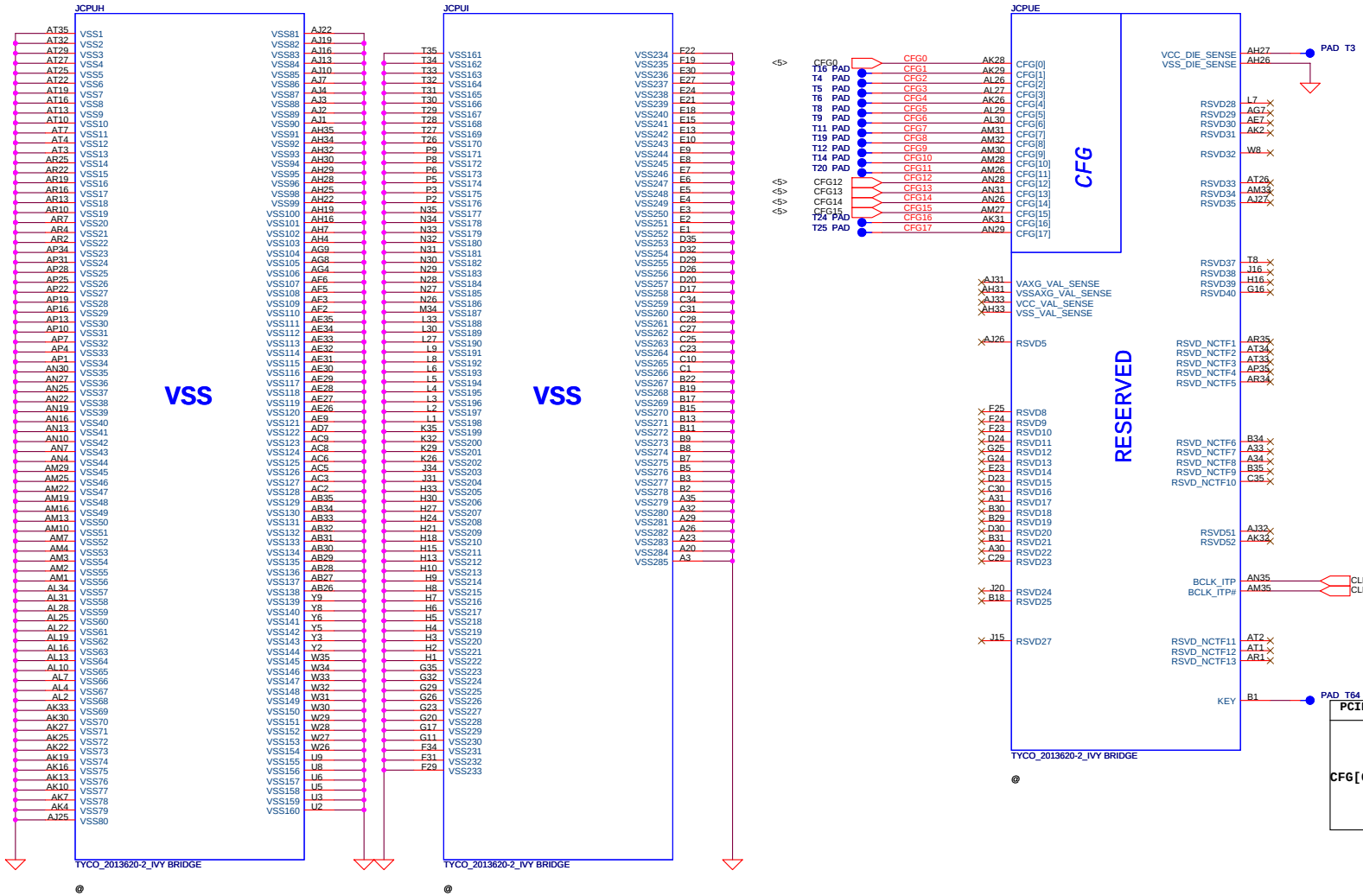

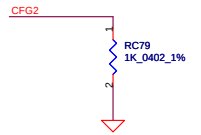

PEG Static Lane Reversal - CFG2 is for the 16x	
CFG2	* 1: Normal Operation; Lane # definition matches socket pin map definition 0:Lane Reversed

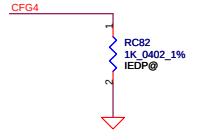

Embedded Display Port Presence Strap	
CFG4	* 1 : Disabled; No Physical Display Port attached to Embedded Display Port 0 : Enabled; An external Display Port device is connected to the Embedded Display Port

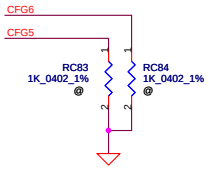

PCIE Port Bifurcation Straps	
CFG[6:5]	*11: (Default) x16 - Device 1 functions 1 and 2 disabled 10: x8, x8 - Device 1 function 1 enabled ; function 2 disabled 01: Reserved - (Device 1 function 1 disabled ; function 2 enabled) 00: x8,x4,x4 - Device 1 functions 1 and 2 enabled

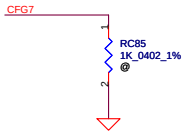

PEG DEFER TRAINING	
CFG7	1: (Default) PEG Train immediately following xxRESETB de assertion 0: PEG Wait for BIOS for training

Security Classification	Compal Secret Data			Compal Electronics, Inc.
Issued Date	2011/12/14	Deciphered Date	2012/12/31	Title: SCHEMATICS, MB A8391
Size: Custom	Document Number: 4019HG			Rev: B
Date: Thursday, February 16, 2012	Sheet 10 of 61			

THIS SHEET OF ENGINEERING DRAWING IS THE PROPRIETARY PROPERTY OF COMPAL ELECTRONICS, INC. AND CONTAINS CONFIDENTIAL AND TRADE SECRET INFORMATION. THIS SHEET MAY NOT BE TRANSFERED FROM THE CUSTODY OF THE COMPETENT DIVISION OF R&D DEPARTMENT EXCEPT AS AUTHORIZED BY COMPAL ELECTRONICS, INC. NEITHER THIS SHEET NOR THE INFORMATION IT CONTAINS MAY BE USED BY OR DISCLOSED TO ANY THIRD PARTY WITHOUT PRIOR WRITTEN CONSENT OF COMPAL ELECTRONICS, INC.

DDR3 SO-DIMM A
Reverse Type

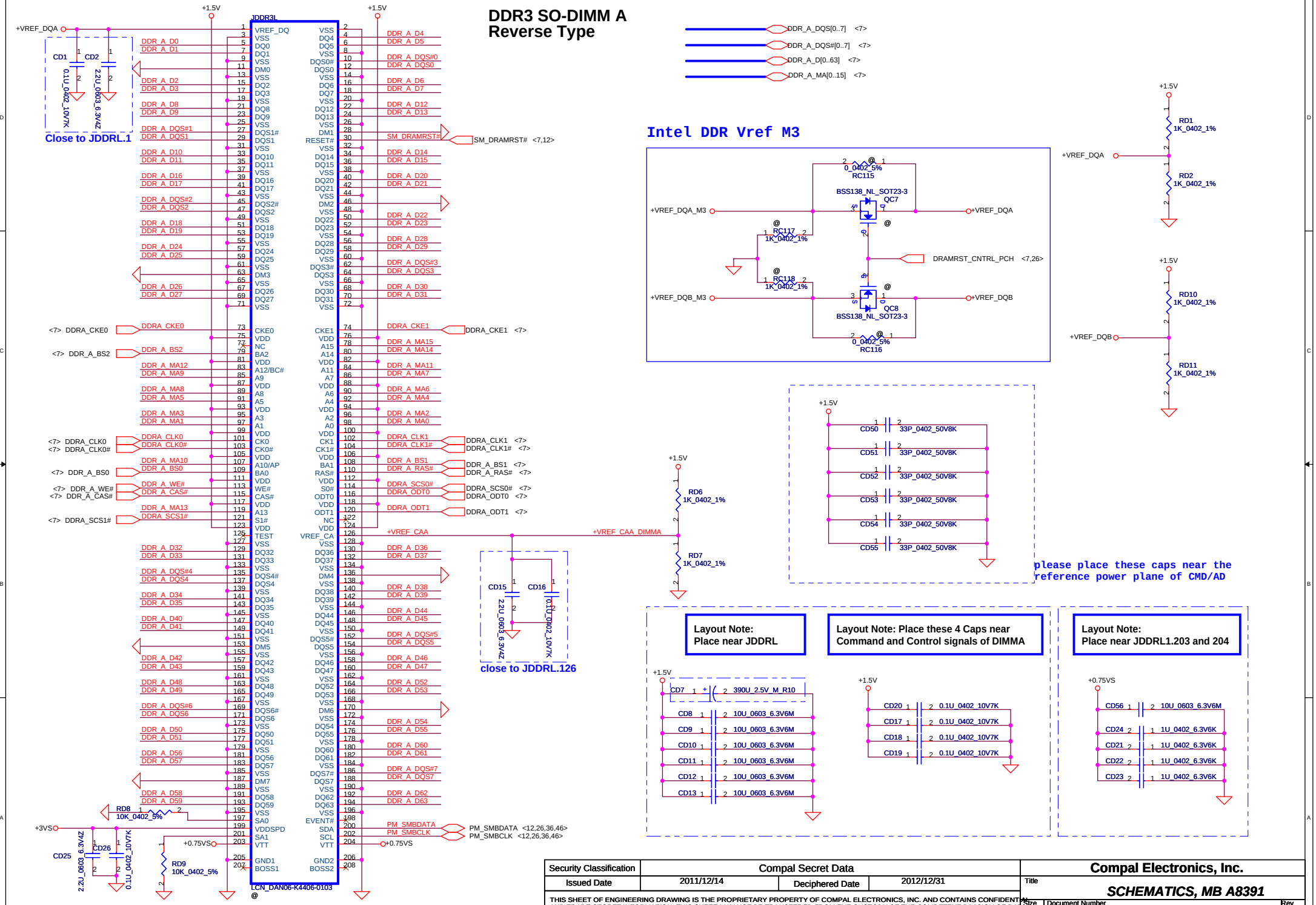

Security Classification	Compal Secret Data		
Issued Date	2011/12/14	Deciphered Date	2012/12/31

THIS SHEET OF ENGINEERING DRAWING IS THE PROPRIETARY PROPERTY OF COMPAL ELECTRONICS, INC. AND CONTAINS CONFIDENTIAL AND TRADE SECRET INFORMATION. THIS SHEET MAY NOT BE TRANSFERRED FROM THE CUSTODY OF THE COMPETENT DIVISION OF R&D DEPARTMENT EXCEPT AS AUTHORIZED BY COMPAL ELECTRONICS, INC. NEITHER THIS SHEET NOR THE INFORMATION IT CONTAINS MAY BE USED BY OR DISCLOSED TO ANY THIRD PARTY WITHOUT PRIOR WRITTEN CONSENT OF COMPAL ELECTRONICS, INC.

Compal Electronics, Inc.

Title: ***SCHEMATICS, MB A8391***

Size: Custom | Document Number: **4019HG** | Rev: B

Date: Thursday, February 16, 2012 | Sheet 11 of 61

Reverse Type
DDR3 SO-DIMM B

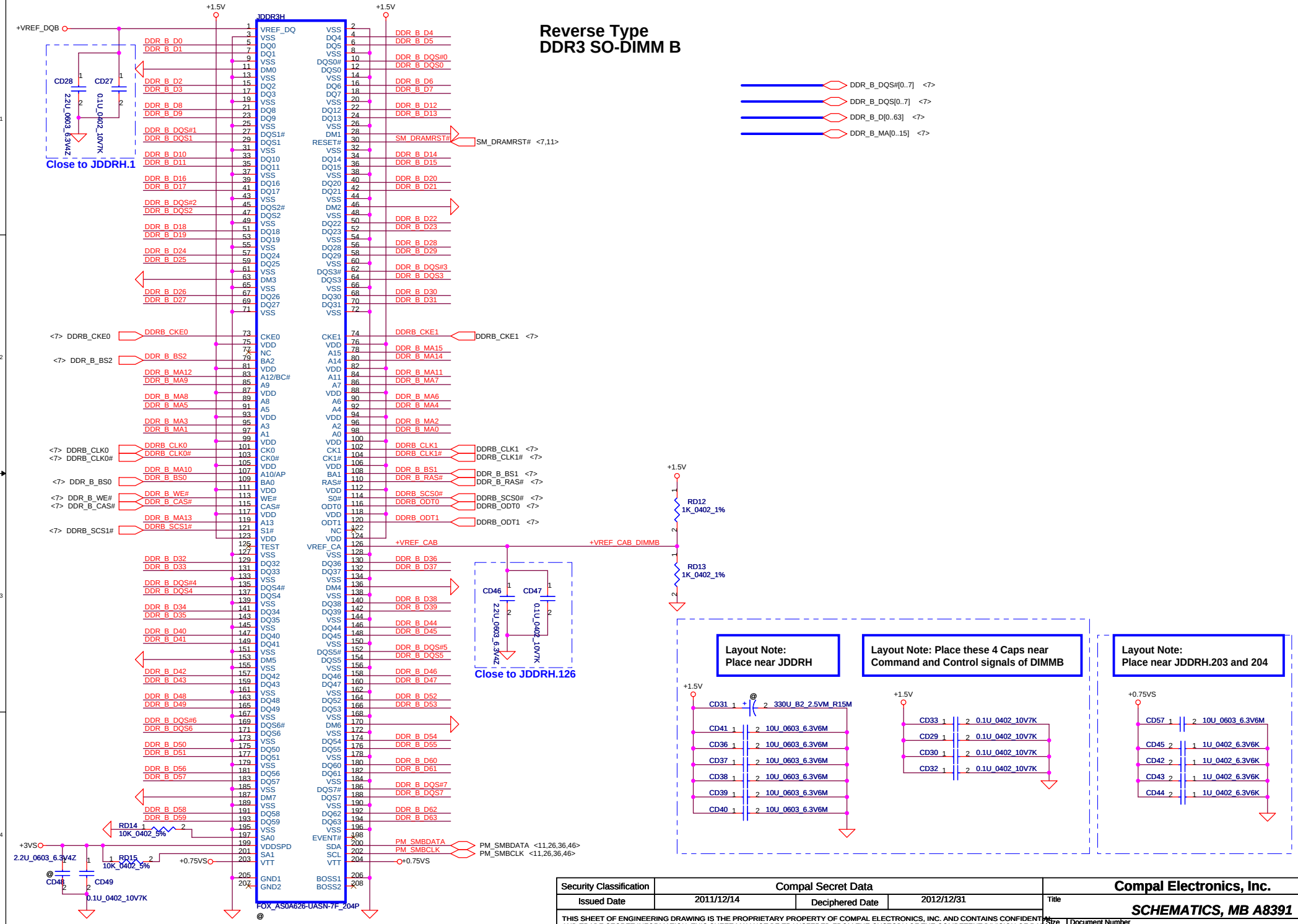

Security Classification	Compal Secret Data		
Issued Date	2011/12/14	Deciphered Date	2012/12/31

THIS SHEET OF ENGINEERING DRAWING IS THE PROPRIETARY PROPERTY OF COMPAL ELECTRONICS, INC. AND CONTAINS CONFIDENTIAL AND TRADE SECRET INFORMATION. THIS SHEET MAY NOT BE TRANSFERED FROM THE CUSTODY OF THE COMPETENT DIVISION OF R&D DEPARTMENT EXCEPT AS AUTHORIZED BY COMPAL ELECTRONICS, INC. NEITHER THIS SHEET NOR THE INFORMATION IT CONTAINS MAY BE USED BY OR DISCLOSED TO ANY THIRD PARTY WITHOUT PRIOR WRITTEN CONSENT OF COMPAL ELECTRONICS, INC.

Compal Electronics, Inc.

Title: ***SCHEMATICS, MB A8391***

Size: Custom | Document Number: **4019HG** | Rev: B

Date: Thursday, February 16, 2012 | Sheet 12 of 61

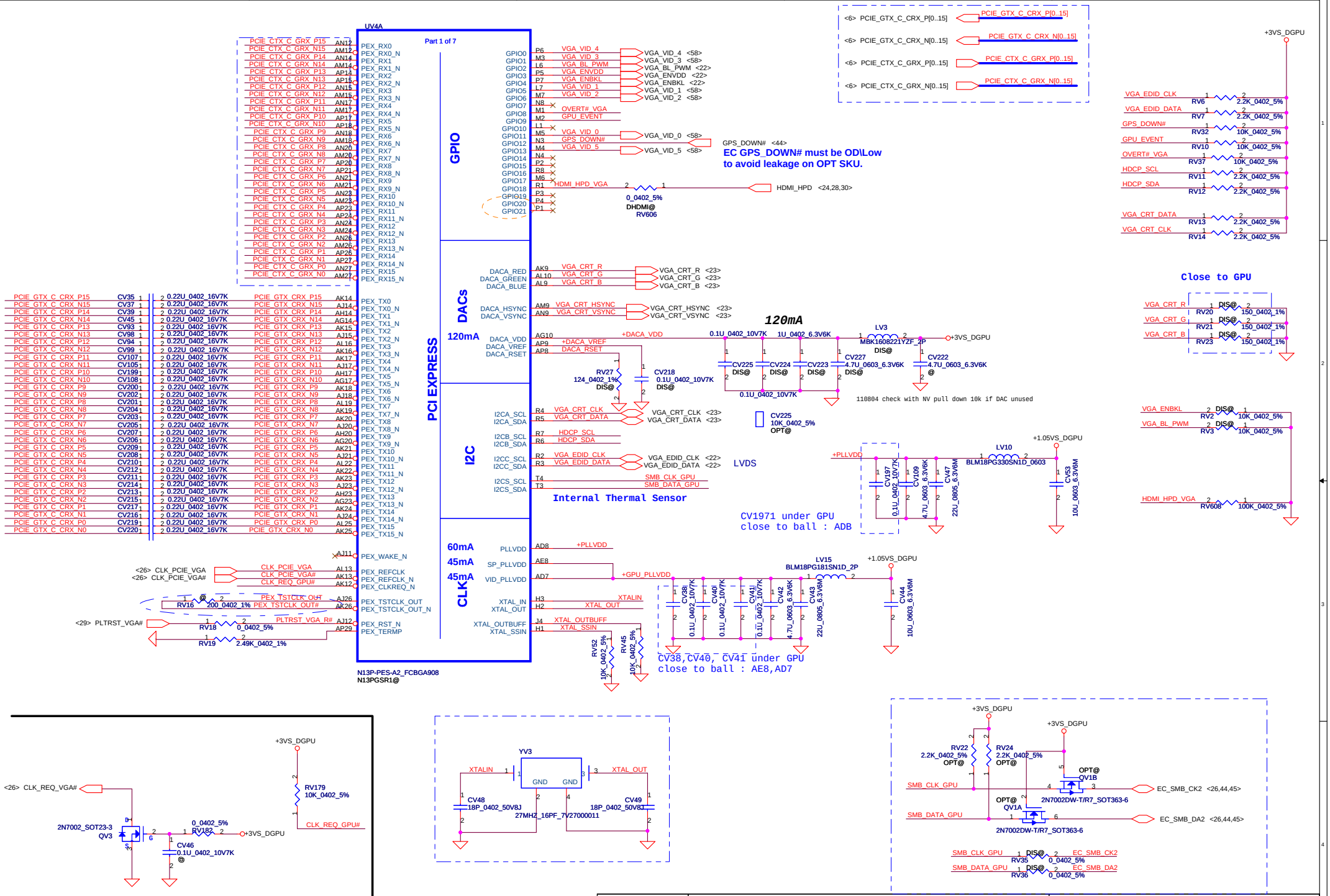

Security Classification	Compal Secret Data			Compal Electronics, Inc.
Issued Date	2011/12/14	Deciphered Date	2012/12/31	Title: SCHEMATICS, MB A8391
				Size: Custom; Document Number: 4019HG; Rev: B
				Date: Thursday, February 16, 2012; Sheet 13 of 61

THIS SHEET OF ENGINEERING DRAWING IS THE PROPRIETARY PROPERTY OF COMPAL ELECTRONICS, INC. AND CONTAINS CONFIDENTIAL AND TRADE SECRET INFORMATION. THIS SHEET MAY NOT BE TRANSFERED FROM THE CUSTODY OF THE COMPETENT DIVISION OF R&D DEPARTMENT EXCEPT AS AUTHORIZED BY COMPAL ELECTRONICS, INC. NEITHER THIS SHEET NOR THE INFORMATION IT CONTAINS MAY BE USED BY OR DISCLOSED TO ANY THIRD PARTY WITHOUT PRIOR WRITTEN CONSENT OF COMPAL ELECTRONICS, INC.

VRAM Interface

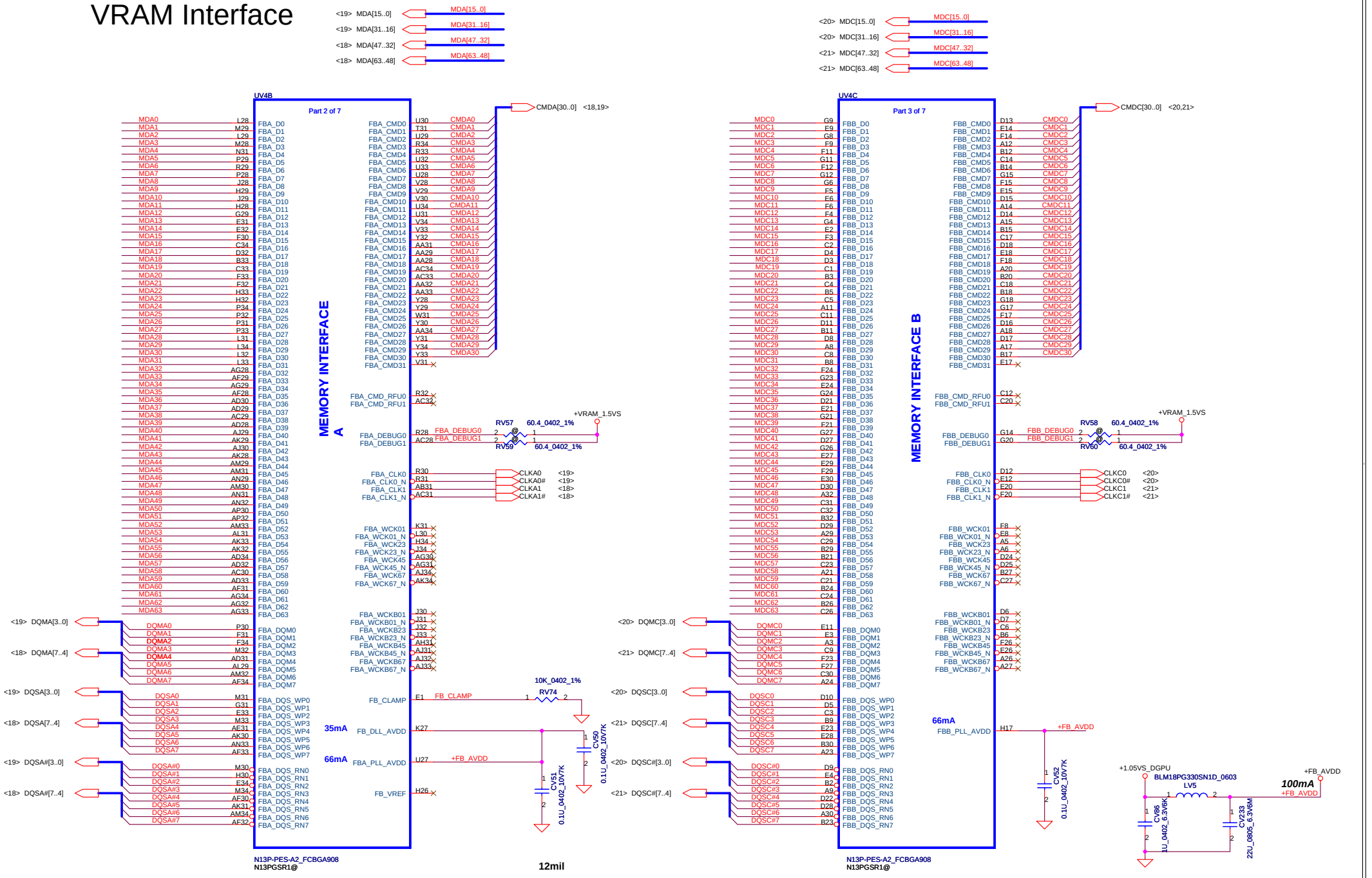

Security Classification	Compal Secret Data		
Issued Date	2011/12/14	Deciphered Date	2012/12/31

THIS SHEET OF ENGINEERING DRAWING IS THE PROPRIETARY PROPERTY OF COMPAL ELECTRONICS, INC. AND CONTAINS CONFIDENTIAL AND TRADE SECRET INFORMATION. THIS SHEET MAY NOT BE TRANSFERED FROM THE CUSTODY OF THE COMPETENT DIVISION OF R&D DEPARTMENT EXCEPT AS AUTHORIZED BY COMPAL ELECTRONICS, INC. NEITHER THIS SHEET NOR THE INFORMATION IT CONTAINS MAY BE USED BY OR DISCLOSED TO ANY THIRD PARTY WITHOUT PRIOR WRITTEN CONSENT OF COMPAL ELECTRONICS, INC.

Compal Electronics, Inc.

Title: **SCHEMATICS, MB A8391**

Size	Document Number	Rev
Custom	4019HG	B

Date: Thursday, February 16, 2012 | Sheet 14 of 61

Physical Strapping pin	Power Rail	Logical Strapping Bit3	Logical Strapping Bit2	Logical Strapping Bit1	Logical Strapping Bit0
ROM_SO	+3VS_DGPU	XCLK_417 for GL , FB[1]	FB_0_BAR_SIZE for GL , FB[0]	SMB_ALT_ADDR	VGA_DEVICE
ROM_SCLK	+3VS_DGPU	**PCI_DEVID[4]**	SUB_VENDOR	**SLOT_CLK_CFG for GL PCI_DEVID[5]**	PEX_PLLEN_TERM
ROM_SI	+3VS_DGPU	**RAMCFG[3]**	**RAMCFG[2]**	**RAMCFG[1]**	**RAMCFG[0]**
STRAP0	+3VS_DGPU	USER[3]	USER[2]	USER[1]	USER[0]
STRAP1	+3VS_DGPU	3GIO_PADCFG[3]	3GIO_PADCFG[2]	3GIO_PADCFG[1]	3GIO_PADCFG[0]
STRAP2	+3VS_DGPU	**PCI_DEVID[3]**	**PCI_DEVID[2]**	**PCI_DEVID[1]**	**PCI_DEVID[0]**
STRAP3	+3VS_DGPU	SOR3_EXPOSED	SOR2_EXPOSED	SOR1_EXPOSED	SOR0_EXPOSED
STRAP4	+3VS_DGPU	RESERVED	PCIE_SPEED_CHANGE_GEN3	PCIE_MAX_SPEED	DP_PLL_VDD33V

SKU	Device ID	biit5 to bit0
N13P-GL ES2	0x0DE9	101001
N13P-GS ES1	0x0FDB	011011
N13P-GS QS	0x0FD2	010010

Resistor Values	Pull-up to +3VS _DGPU	Pull-down to Gnd
5K	1000	0000
10K	1001	0001
15K	1010	0010
20K	1011	0011
25K	1100	0100
30K	1101	0101
35K	1110	0110
45K	1111	0111

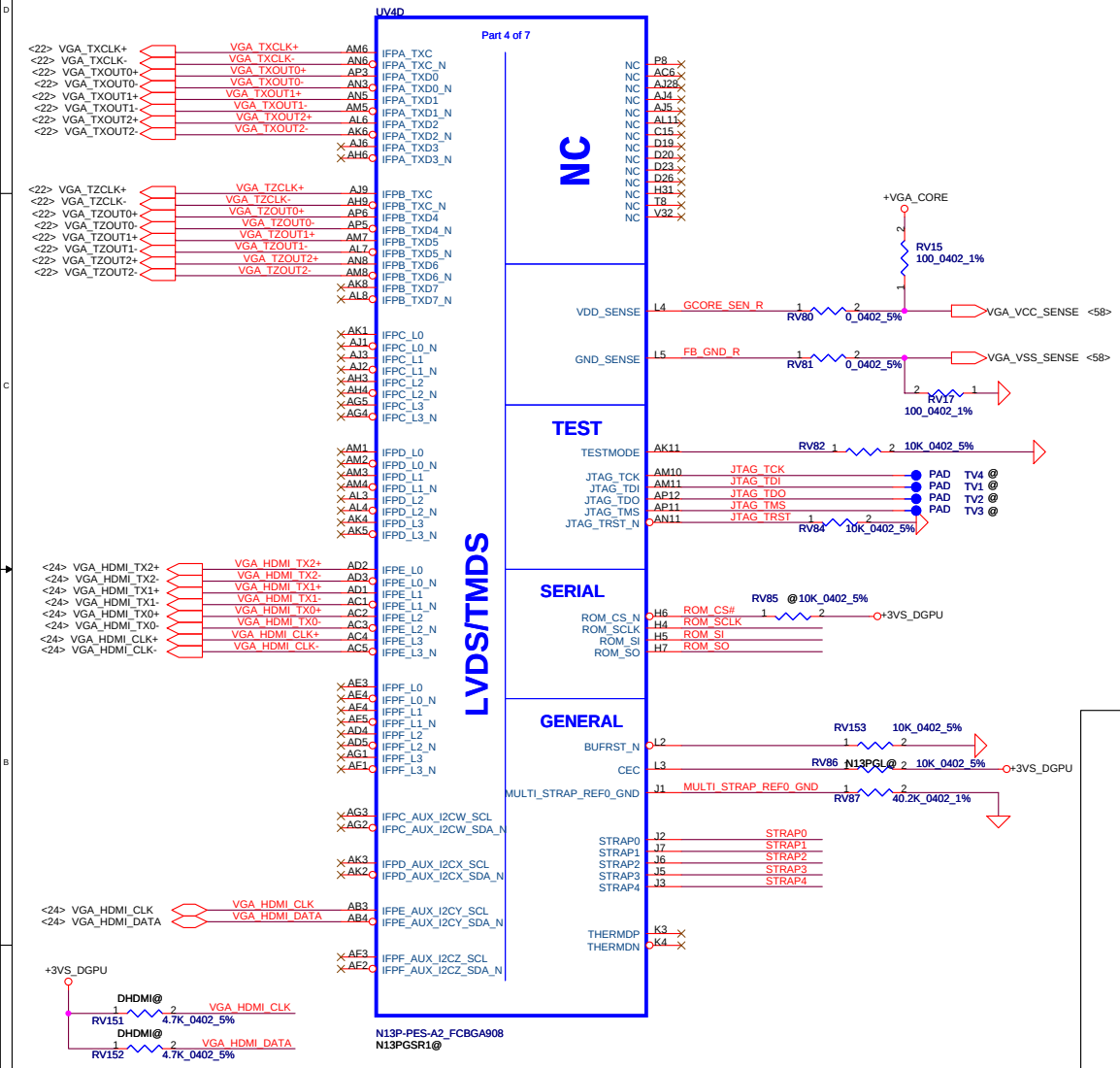

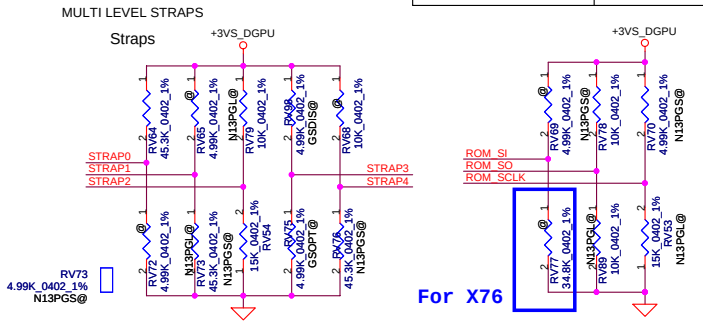

N13P-GL/GS/GT/LP ROM_SI				
	Hynix (900MHZ) 64MX16 H5TQ1G63DFR-11C SA000041S20	1GB	0010	RV77 PD 15K (SD034150280)
	Hynix (900MHZ) 128MX16 H5TQ2G63BFR-11C SA00003YO00	2GB	0110	RV77 PD 34.8k (SD034348280)
	Hynix (900MHZ) 128MX16 H5TQ2G63DFR-11C SA00003YO70	2GB	0101	RV77 PD 30k (SD034300280)
	Samsung (900MHZ) 64MX16 K4W1G1646G-BC11 SA00004GS00	1GB	0011	RV77 PD 20K (SD034200280)
	Samsung (900MHZ) 128M16 K4W2G1646C-HC11 SA000047Q00	2GB	0111	RV77 PD 45.3K (SD034453280)
	Samsung (900MHZ) 128M16 K4W2G1646E-HC11 SA000047QC0	2GB		

Security Classification	Compal Secret Data		
Issued Date	2011/12/14	Deciphered Date	2012/12/31

THIS SHEET OF ENGINEERING DRAWING IS THE PROPRIETARY PROPERTY OF COMPAL ELECTRONICS, INC. AND CONTAINS CONFIDENTIAL AND TRADE SECRET INFORMATION. THIS SHEET MAY NOT BE TRANSFERED FROM THE CUSTODY OF THE COMPETENT DIVISION OF R&D DEPARTMENT EXCEPT AS AUTHORIZED BY COMPAL ELECTRONICS, INC. NEITHER THIS SHEET NOR THE INFORMATION IT CONTAINS MAY BE USED BY OR DISCLOSED TO ANY THIRD PARTY WITHOUT PRIOR WRITTEN CONSENT OF COMPAL ELECTRONICS, INC.

Compal Electronics, Inc.

Title: **SCHEMATICS, MB A8391**

Size: Custom | Document Number: 4019HG | Rev: B

Date: Thursday, February 16, 2012 | Sheet 15 of 61

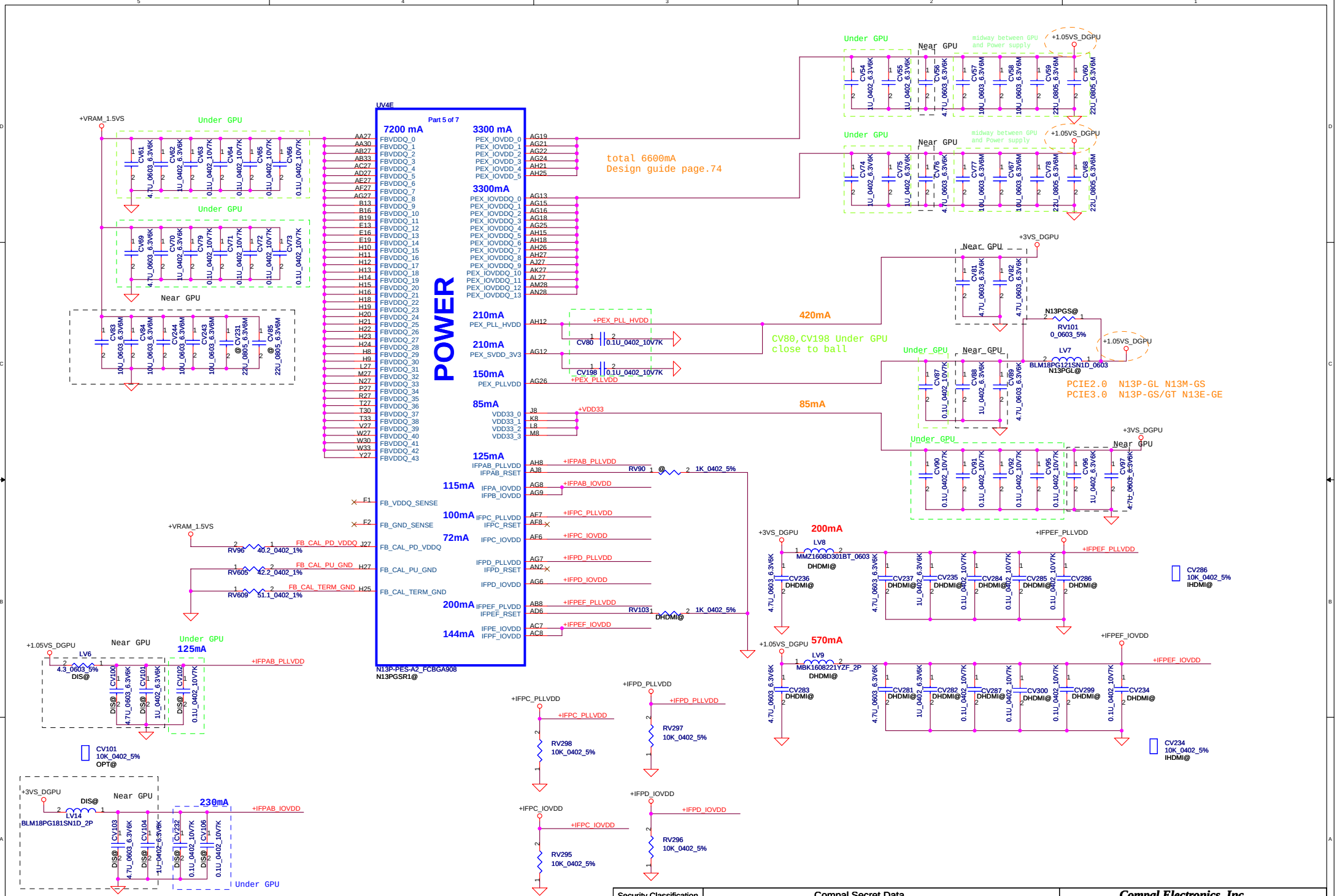

Security Classification	Compal Secret Data		
Issued Date	2011/12/14	Deciphered Date	2012/12/31

THIS SHEET OF ENGINEERING DRAWING IS THE PROPRIETARY PROPERTY OF COMPAL ELECTRONICS, INC. AND CONTAINS CONFIDENTIAL AND TRADE SECRET INFORMATION. THIS SHEET MAY NOT BE TRANSFERED FROM THE CUSTODY OF THE COMPETENT DIVISION OF R&D DEPARTMENT EXCEPT AS AUTHORIZED BY COMPAL ELECTRONICS, INC. NEITHER THIS SHEET NOR THE INFORMATION IT CONTAINS MAY BE USED BY OR DISCLOSED TO ANY THIRD PARTY WITHOUT PRIOR WRITTEN CONSENT OF COMPAL ELECTRONICS, INC.

Compal Electronics, Inc.

Title: **SCHEMATICS, MB A8391**

Size: Custom | Document Number: 4019HG | Rev: B

Date: Thursday, February 16, 2012 | Sheet 16 of 61

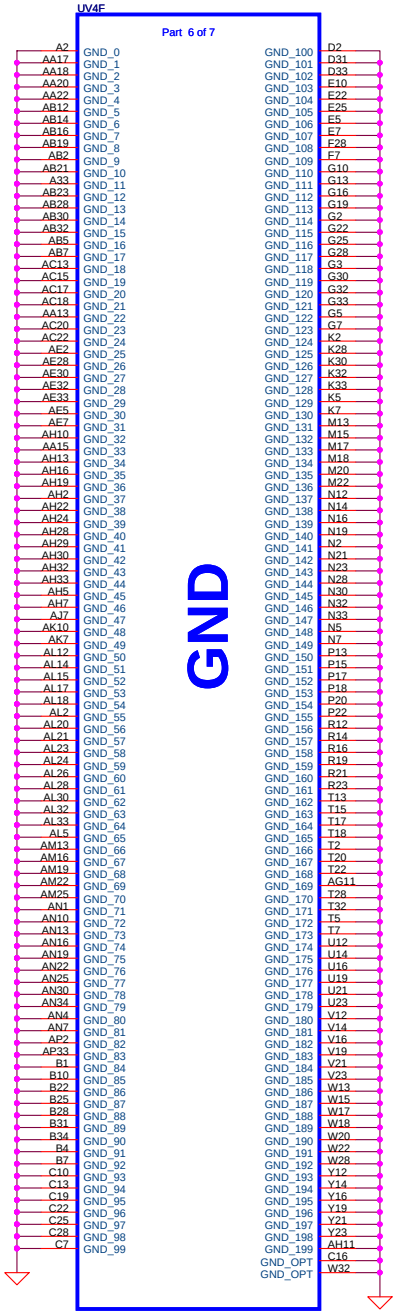

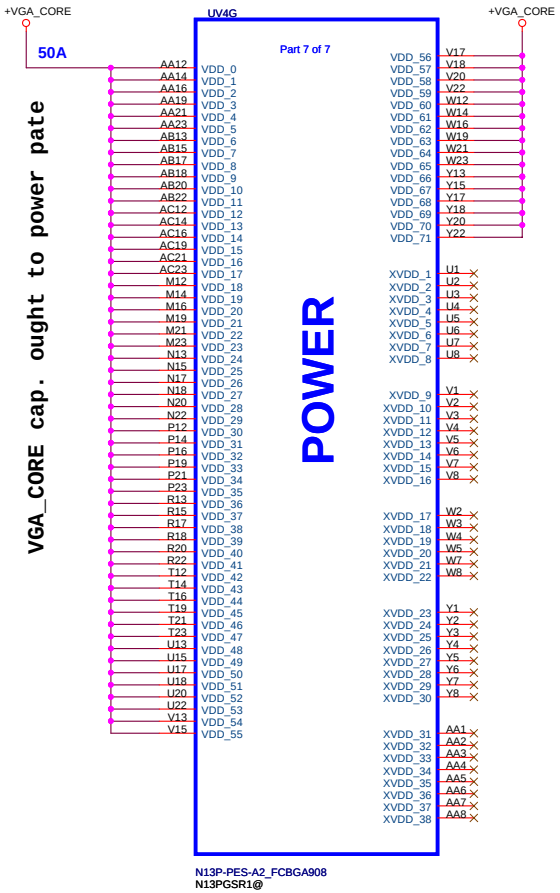

Security Classification	Compal Secret Data		
Issued Date	2011/12/14	Deciphered Date	2012/12/31

THIS SHEET OF ENGINEERING DRAWING IS THE PROPRIETARY PROPERTY OF COMPAL ELECTRONICS, INC. AND CONTAINS CONFIDENTIAL AND TRADE SECRET INFORMATION. THIS SHEET MAY NOT BE TRANSFERRED FROM THE CUSTODY OF THE COMPETENT DIVISION OF R&D DEPARTMENT EXCEPT AS AUTHORIZED BY COMPAL ELECTRONICS, INC. NEITHER THIS SHEET NOR THE INFORMATION IT CONTAINS MAY BE USED BY OR DISCLOSED TO ANY THIRD PARTY WITHOUT PRIOR WRITTEN CONSENT OF COMPAL ELECTRONICS, INC.

Compal Electronics, Inc.

Title: SCHEMATICS, MB A8391

Size: Custom | Document Number: 4019HG | Rev: B

Date: Thursday, February 16, 2012 | Sheet 17 of 61

VRAM DDR3 chips (1GB)

64Mx16 DDR3 *8==>1GB

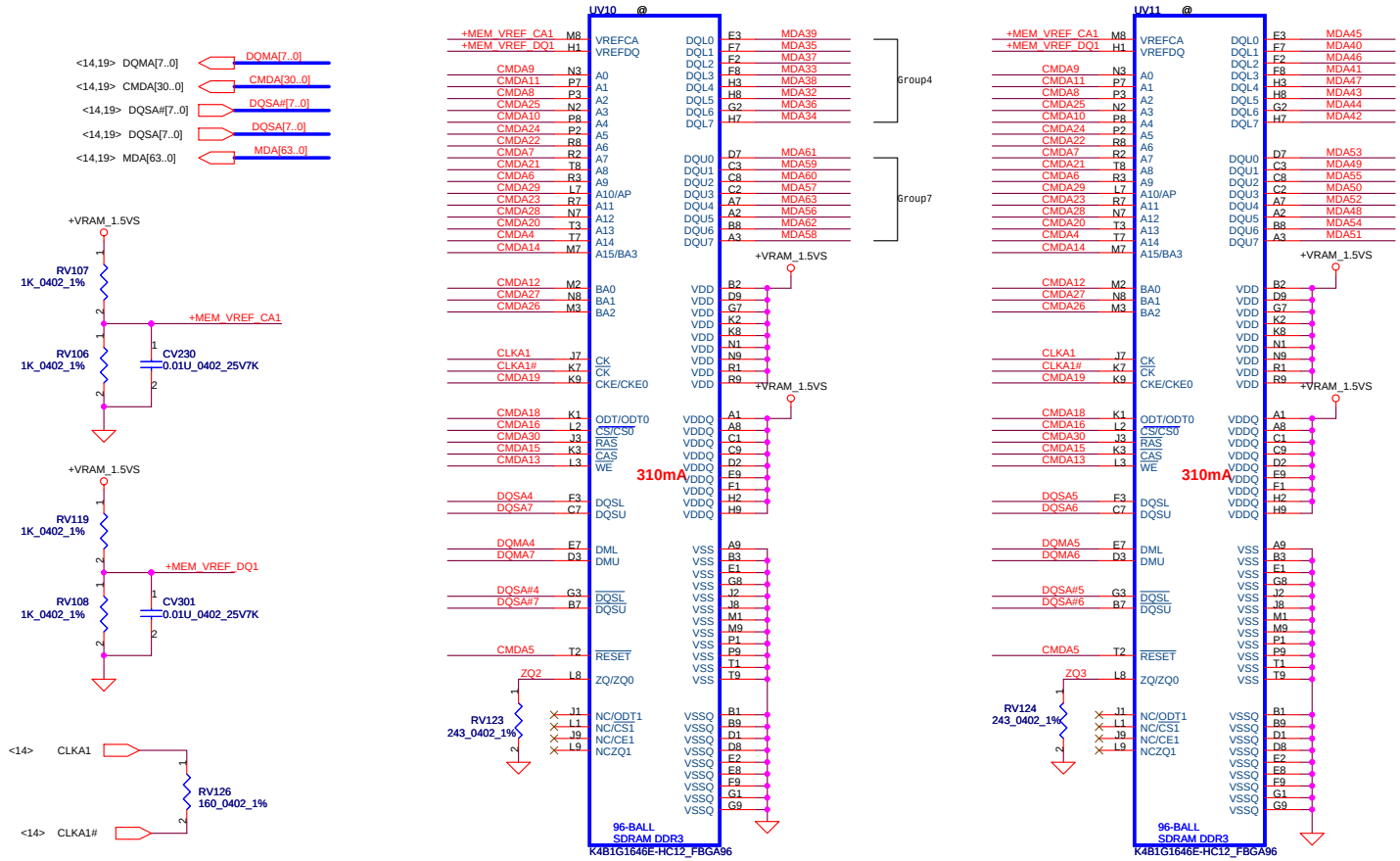

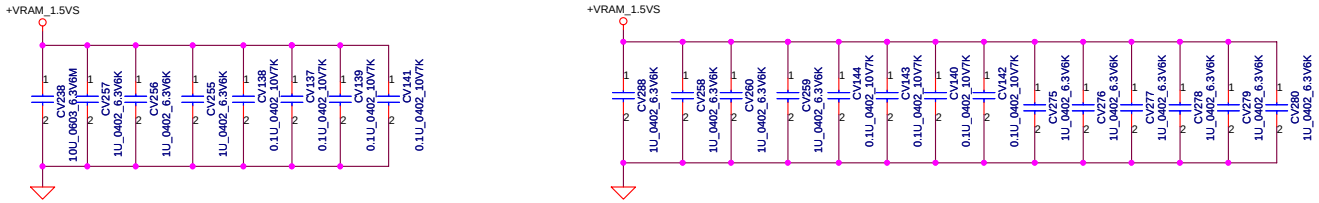

Mode D Address	0..31	32..63
CMD0	CS0_L#	
CMD1		
CMD2	ODT_L	
CMD3	CKE	
CMD4	A14	A14
CMD5	RST	RST
CMD6	A9	A9
CMD7	A7	A7
CMD8	A2	A2
CMD9	A0	A0
CMD10	A4	A4
CMD11	A1	A1
CMD12	BA0	BA0
CMD13	WE*	WE*
CMD14	A15	A15
CMD15	CAS*	CAS*
CMD16		CS0_H#
CMD17		
CMD18		ODT_H
CMD19		CKE_H
CMD20	A13	A13
CMD21	A8	A8
CMD22	A6	A6
CMD23	A11	A11
CMD24	A5	A5
CMD25	A3	A3
CMD26	BA2	BA2
CMD27	BA1	BA1
CMD28	A12	A12
CMD29	A10	A10
CMD30	RAS*	RAS*
Not Available		
	LOW	HIGH

Security Classification	Compal Secret Data		
Issued Date	2011/12/14	Deciphered Date	2012/12/31

THIS SHEET OF ENGINEERING DRAWING IS THE PROPRIETARY PROPERTY OF COMPAL ELECTRONICS, INC. AND CONTAINS CONFIDENTIAL AND TRADE SECRET INFORMATION. THIS SHEET MAY NOT BE TRANSFERED FROM THE CUSTODY OF THE COMPETENT DIVISION OF R&D DEPARTMENT EXCEPT AS AUTHORIZED BY COMPAL ELECTRONICS, INC. NEITHER THIS SHEET NOR THE INFORMATION IT CONTAINS MAY BE USED BY OR DISCLOSED TO ANY THIRD PARTY WITHOUT PRIOR WRITTEN CONSENT OF COMPAL ELECTRONICS, INC.

Compal Electronics, Inc.

Title: **SCHEMATICS, MB A8391**

Size: Custom | Document Number: 4019HG | Rev: B

Date: Thursday, February 16, 2012 | Sheet 18 of 61

VRAM DDR3 chips (1GB)

64Mx16 DDR3 *8==>1GB

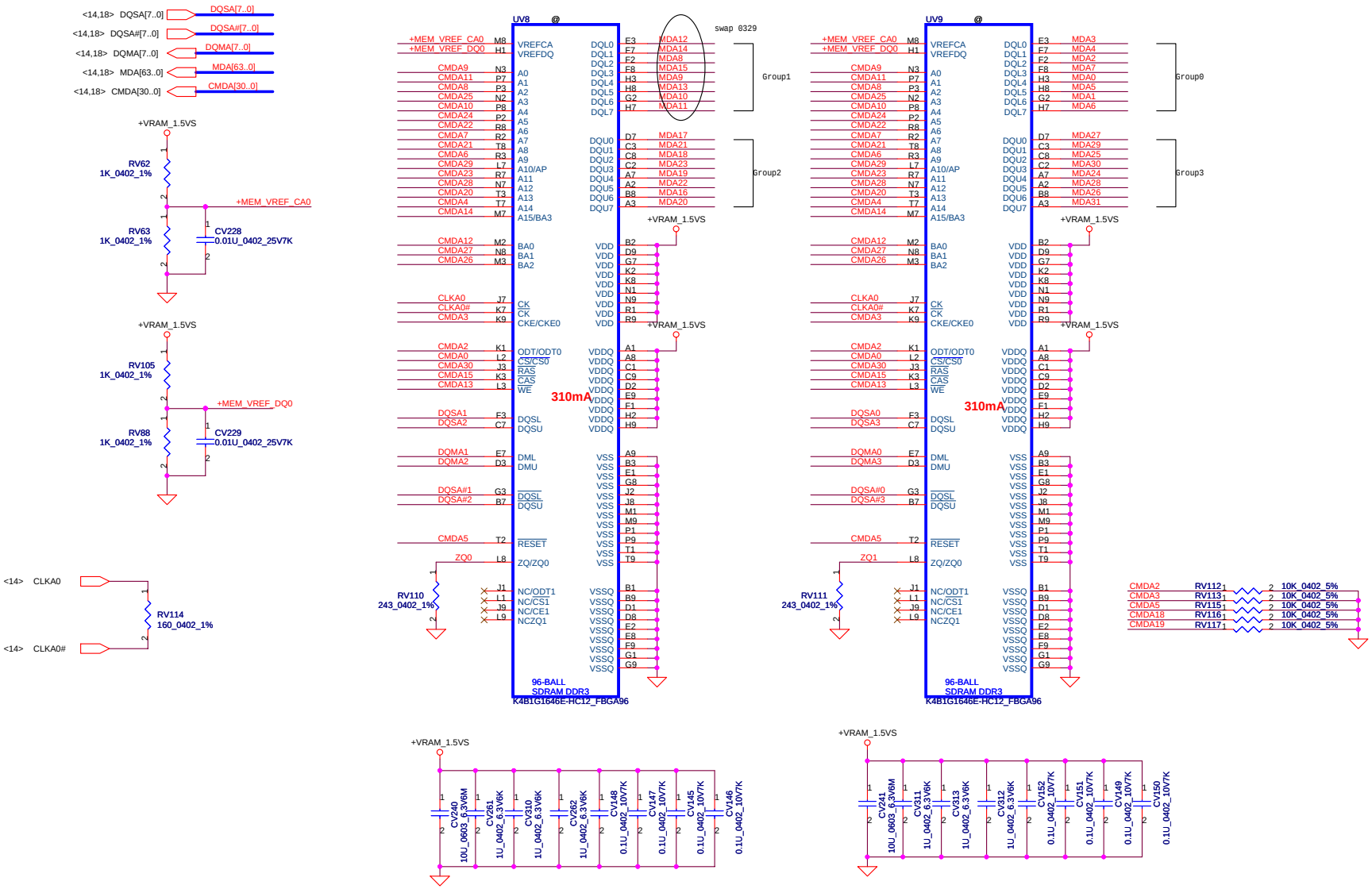

Mode D Address	0..31	32..63
CMD0	CS0_L#	
CMD1		
CMD2	ODT_L	
CMD3	CKE	
CMD4	A14	A14
CMD5	RST	RST
CMD6	A9	A9
CMD7	A7	A7
CMD8	A2	A2
CMD9	A0	A0
CMD10	A4	A4
CMD11	A1	A1
CMD12	BA0	BA0
CMD13	WE*	WE*
CMD14	A15	A15
CMD15	CAS*	CAS*
CMD16		CS0_H#
CMD17		
CMD18		ODT_H
CMD19		CKE_H
CMD20	A13	A13
CMD21	A8	A8
CMD22	A6	A6
CMD23	A11	A11
CMD24	A5	A5
CMD25	A3	A3
CMD26	BA2	BA2
CMD27	BA1	BA1
CMD28	A12	A12
CMD29	A10	A10
CMD30	RAS*	RAS*
Not Available		
	LOW	HIGH

	Command Bit	Default Pull-down
DDR3	ODTx	10k
	CKEx	10k
	RST	10k
	CS*	No Termination

Security Classification	Compal Secret Data		
Issued Date	2011/12/14	Deciphered Date	2012/12/31

THIS SHEET OF ENGINEERING DRAWING IS THE PROPRIETARY PROPERTY OF COMPAL ELECTRONICS, INC. AND CONTAINS CONFIDENTIAL AND TRADE SECRET INFORMATION. THIS SHEET MAY NOT BE TRANSFERED FROM THE CUSTODY OF THE COMPETENT DIVISION OF R&D DEPARTMENT EXCEPT AS AUTHORIZED BY COMPAL ELECTRONICS, INC. NEITHER THIS SHEET NOR THE INFORMATION IT CONTAINS MAY BE USED BY OR DISCLOSED TO ANY THIRD PARTY WITHOUT PRIOR WRITTEN CONSENT OF COMPAL ELECTRONICS, INC.

Compal Electronics, Inc.

Title: **SCHEMATICS, MB A8391**

Size: Custom | Document Number: 4019HG | Rev: B

Date: Thursday, February 16, 2012 | Sheet 19 of 61

VRAM DDR3 chips (1GB)

64Mx16 DDR3 *8==>1GB

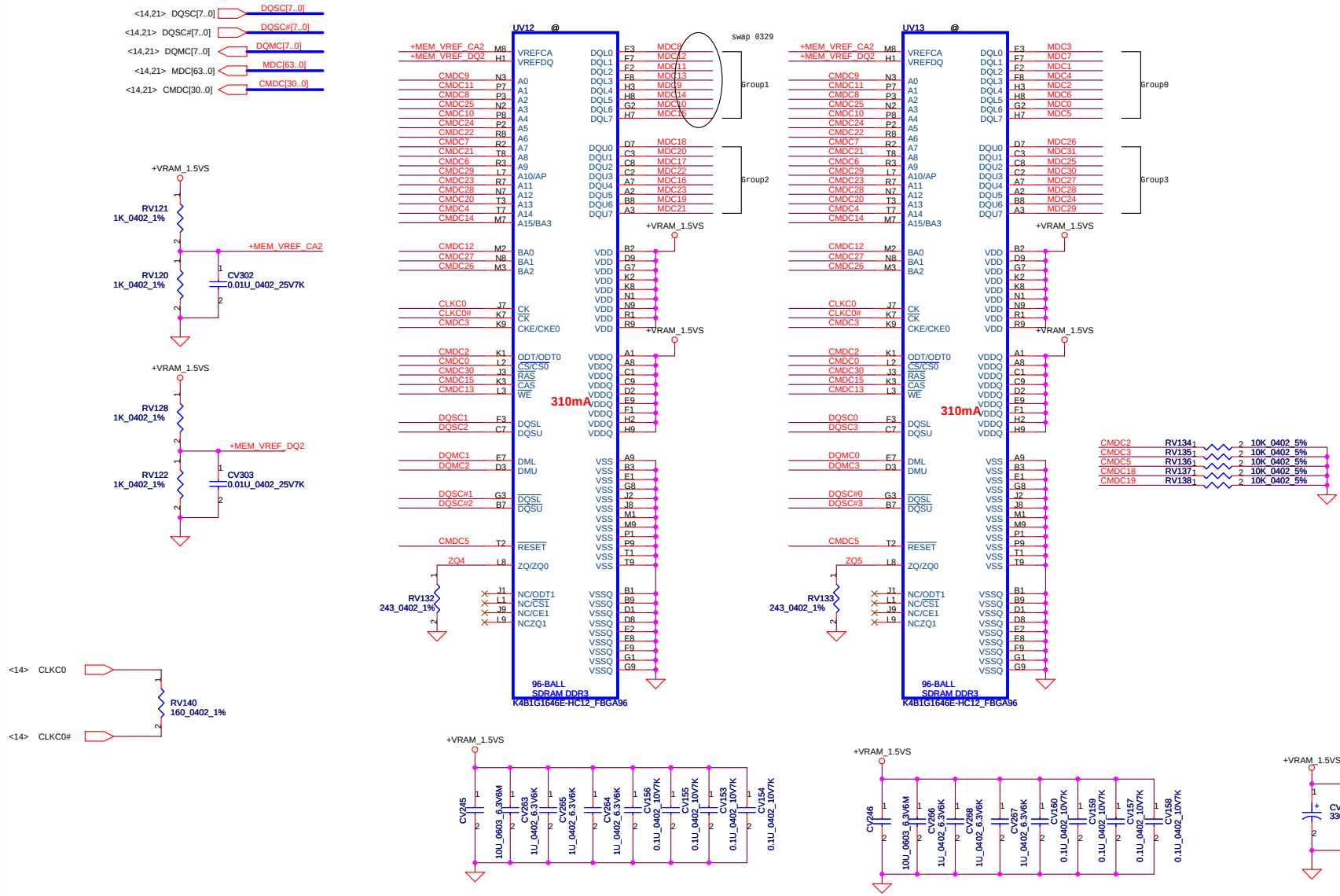

Mode D Address	0..31	32..63
CMD0	CS0_L#	
CMD1		
CMD2	ODT_L	
CMD3	CKE	
CMD4	A14	A14
CMD5	RST	RST
CMD6	A9	A9
CMD7	A7	A7
CMD8	A2	A2
CMD9	A0	A0
CMD10	A4	A4
CMD11	A1	A1
CMD12	BA0	BA0
CMD13	WE*	WE*
CMD14	A15	A15
CMD15	CAS*	CAS*
CMD16		CS0_H#
CMD17		
CMD18		ODT_H
CMD19		CKE_H
CMD20	A13	A13
CMD21	A8	A8
CMD22	A6	A6
CMD23	A11	A11
CMD24	A5	A5
CMD25	A3	A3
CMD26	BA2	BA2
CMD27	BA1	BA1
CMD28	A12	A12
CMD29	A10	A10
CMD30	RAS*	RAS*
Not Available		
	LOW	HIGH

	Command Bit	Default Pull-down
DDR3	ODTx	10k
	CKEx	10k
	RST	10k
	CS*	No Termination

Security Classification	Compal Secret Data		
Issued Date	2011/12/14	Deciphered Date	2012/12/31

THIS SHEET OF ENGINEERING DRAWING IS THE PROPRIETARY PROPERTY OF COMPAL ELECTRONICS, INC. AND CONTAINS CONFIDENTIAL AND TRADE SECRET INFORMATION. THIS SHEET MAY NOT BE TRANSFERRED FROM THE CUSTODY OF THE COMPETENT DIVISION OF R&D DEPARTMENT EXCEPT AS AUTHORIZED BY COMPAL ELECTRONICS, INC. NEITHER THIS SHEET NOR THE INFORMATION IT CONTAINS MAY BE USED BY OR DISCLOSED TO ANY THIRD PARTY WITHOUT PRIOR WRITTEN CONSENT OF COMPAL ELECTRONICS, INC.

Compal Electronics, Inc.

Title: **SCHEMATICS, MB A8391**

Size: Custom | Document Number: 4019HG | Rev: B

Date: Thursday, February 16, 2012 | Sheet 20 of 61

VRAM DDR3 chips (1GB)

64Mx16 DDR3 *8==>1GB

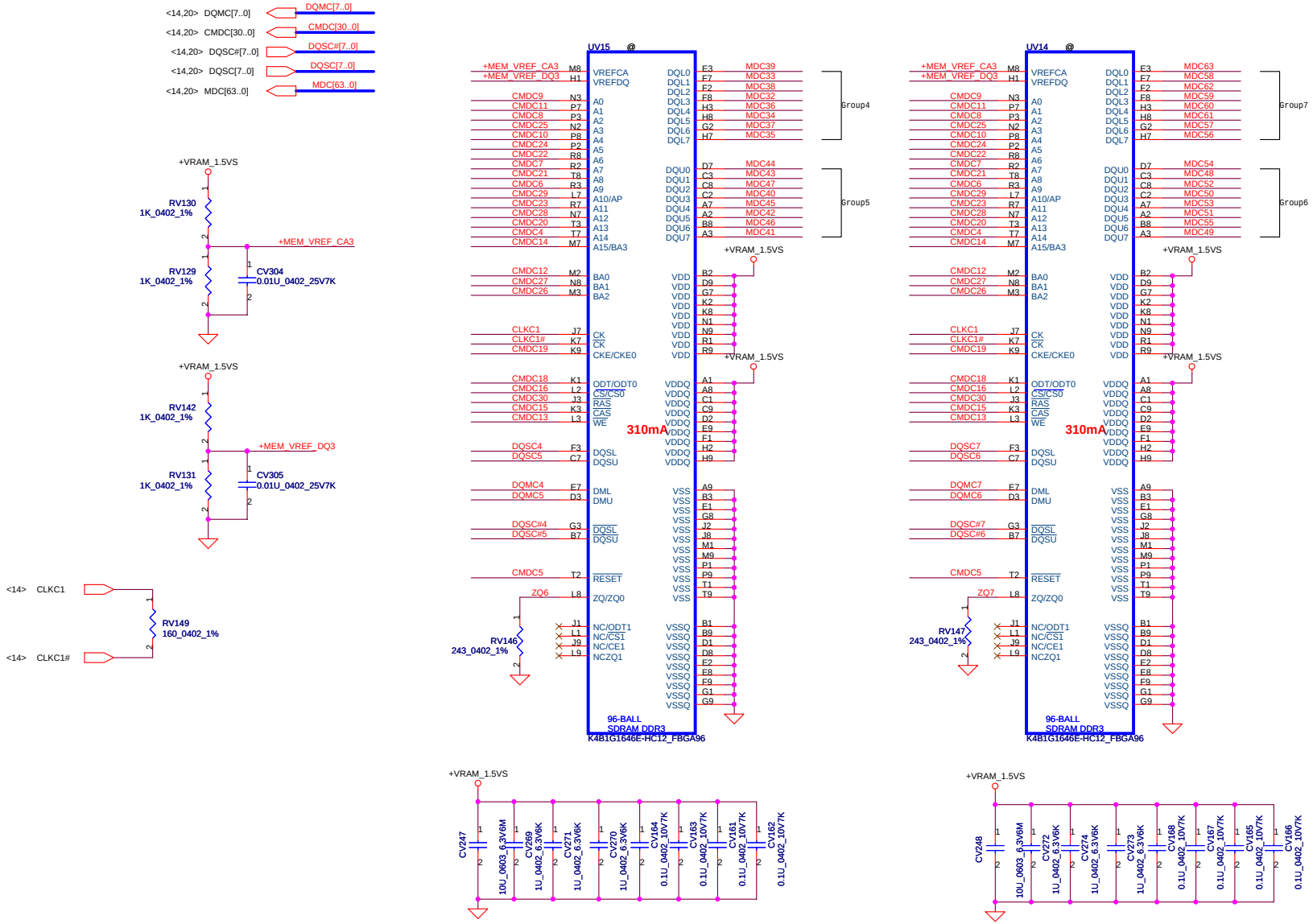

Mode D Address	0..31	32..63
CMD0	CS0_L#	
CMD1		
CMD2	ODT_L	
CMD3	CKE	
CMD4	A14	A14
CMD5	RST	RST
CMD6	A9	A9
CMD7	A7	A7
CMD8	A2	A2
CMD9	A0	A0
CMD10	A4	A4
CMD11	A1	A1
CMD12	BA0	BA0
CMD13	WE*	WE*
CMD14	A15	A15
CMD15	CAS*	CAS*
CMD16		CS0_H#
CMD17		
CMD18		ODT_H
CMD19		CKE_H
CMD20	A13	A13
CMD21	A8	A8
CMD22	A6	A6
CMD23	A11	A11
CMD24	A5	A5
CMD25	A3	A3
CMD26	BA2	BA2
CMD27	BA1	BA1
CMD28	A12	A12
CMD29	A10	A10
CMD30	RAS*	RAS*
Not Available		
	LOW	HIGH

Security Classification	Compal Secret Data		
Issued Date	2011/12/14	Deciphered Date	2012/12/31

THIS SHEET OF ENGINEERING DRAWING IS THE PROPRIETARY PROPERTY OF COMPAL ELECTRONICS, INC. AND CONTAINS CONFIDENTIAL AND TRADE SECRET INFORMATION. THIS SHEET MAY NOT BE TRANSFERED FROM THE CUSTODY OF THE COMPETENT DIVISION OF R&D DEPARTMENT EXCEPT AS AUTHORIZED BY COMPAL ELECTRONICS, INC. NEITHER THIS SHEET NOR THE INFORMATION IT CONTAINS MAY BE USED BY OR DISCLOSED TO ANY THIRD PARTY WITHOUT PRIOR WRITTEN CONSENT OF COMPAL ELECTRONICS, INC.

Compal Electronics, Inc.

Title: **SCHEMATICS, MB A8391**

Size: Custom | Document Number: 4019HG | Rev: B

Date: Thursday, February 16, 2012 | Sheet 21 of 61

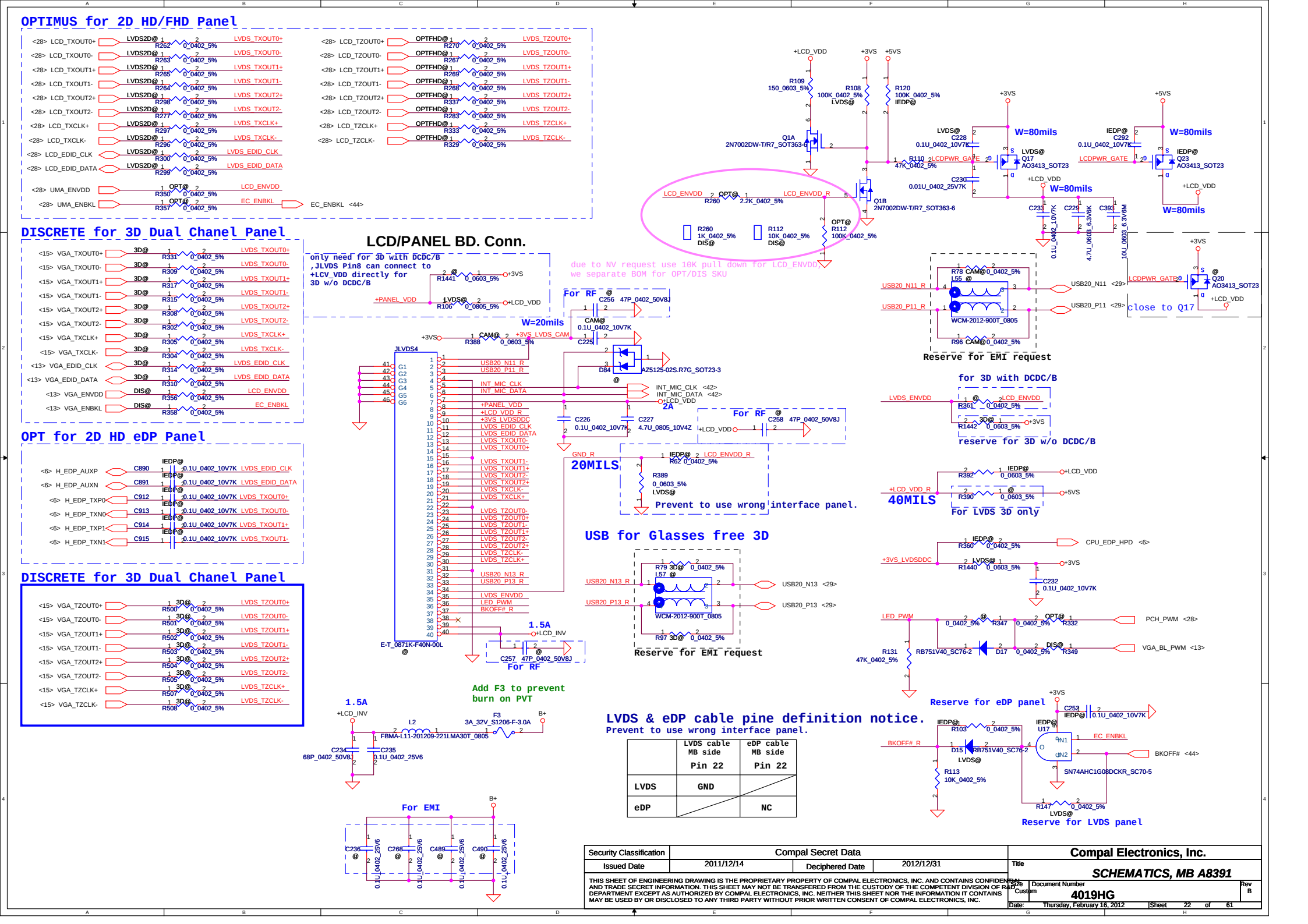
OPTIMUS for 2D HD/FHD Panel
DISCRETE for 3D Dual Chanel Panel
LCD/PANEL BD. Conn.
OPT for 2D HD eDP Panel
DISCRETE for 3D Dual Chanel Panel
USB for Glasses free 3D
LVDS & eDP cable pine definition notice.
Prevent to use wrong interface panel.
Reserve for EMI request
Reserve for eDP panel
Reserve for LVDS panel
Reserve for EMI request
for 3D with DCDC/B
reserve for 3D w/o DCDC/B
For LVDS 3D only
40MILS
20MILS
W=20mils
W=80mils
1.5A
Add F3 to prevent burn on PVT
For RF
For EMI
close to Q17
Compal Secret Data
Compal Electronics, Inc.
SCHEMATICS, MB A8391
4019HG
Thursday, February 16, 2012
Sheet 22 of 61

CRT CONNECTOR

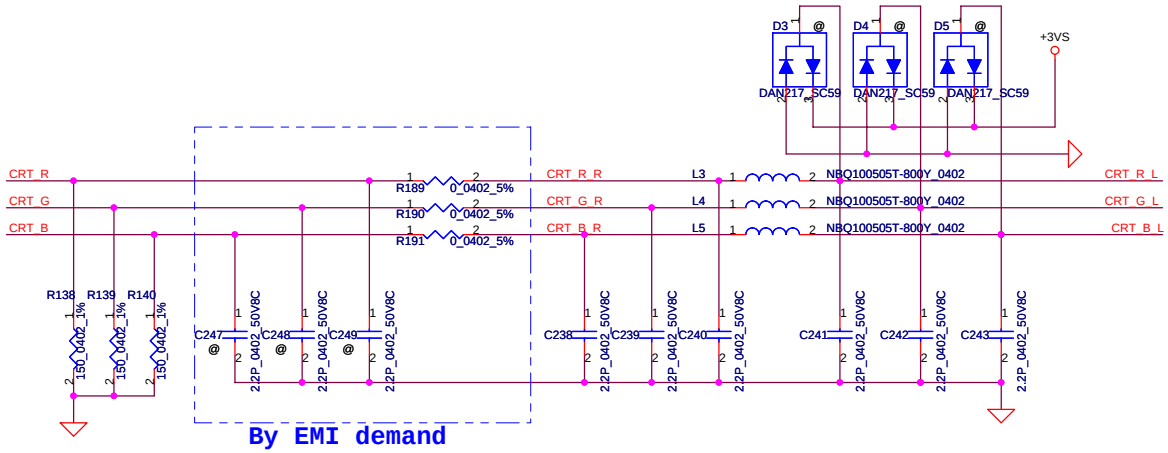

By EMI demand

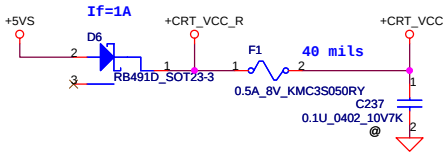

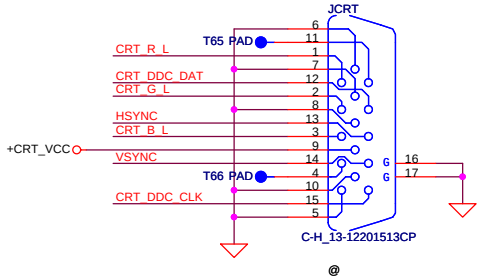

OPTIMUS

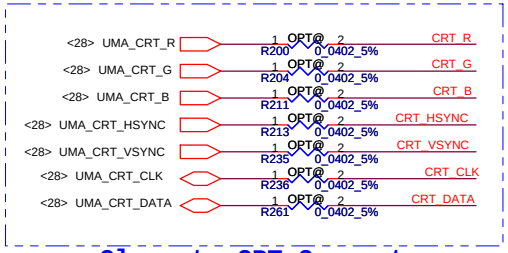

Close to CRT Connector

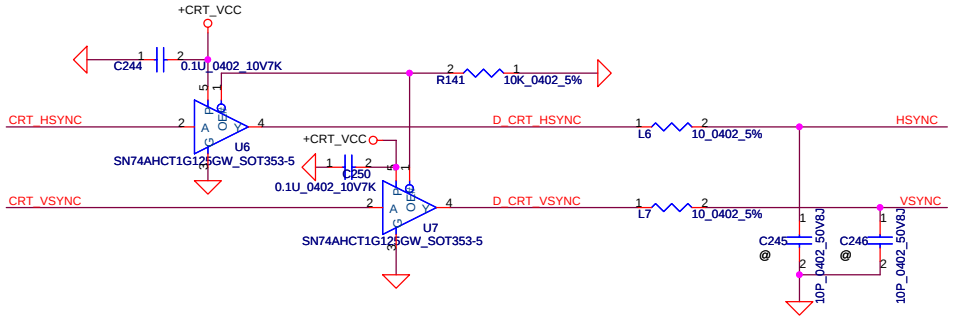

DISCRETE

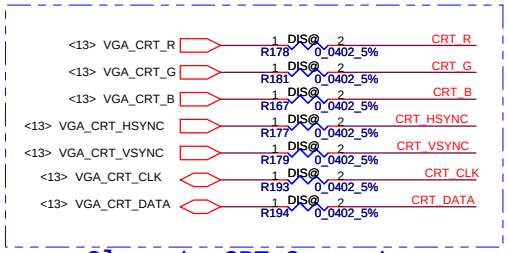

Close to CRT Connector

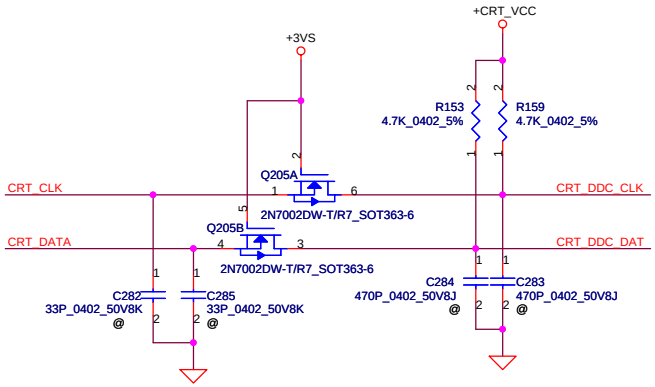

Security Classification	Compal Secret Data		
Issued Date	2011/12/14	Deciphered Date	2012/12/31

THIS SHEET OF ENGINEERING DRAWING IS THE PROPRIETARY PROPERTY OF COMPAL ELECTRONICS, INC. AND CONTAINS CONFIDENTIAL AND TRADE SECRET INFORMATION. THIS SHEET MAY NOT BE TRANSFERED FROM THE CUSTODY OF THE COMPETENT DIVISION OF R&D DEPARTMENT EXCEPT AS AUTHORIZED BY COMPAL ELECTRONICS, INC. NEITHER THIS SHEET NOR THE INFORMATION IT CONTAINS MAY BE USED BY OR DISCLOSED TO ANY THIRD PARTY WITHOUT PRIOR WRITTEN CONSENT OF COMPAL ELECTRONICS, INC.

Compal Electronics, Inc.

Title: *SCHEMATICS, MB A8391*

Size | Document Number: **4019HG** | Rev: B

Date: Thursday, February 16, 2012 | Sheet 23 of 61

HDMI CEC Controller

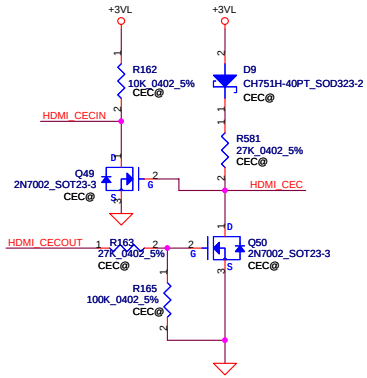

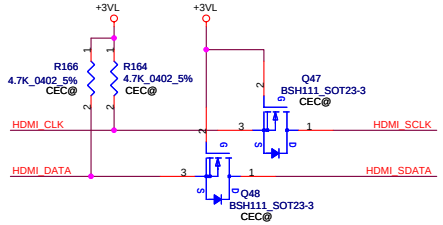

HDMI Royalty

JHDMI1 46@

RO0000003HM

HDMI W/Logo + HDCP

HDMI W/O Logo: RO0000001HM
HDMI W/Logo: RO0000002HM
HDMI W/Logo + HDCP: RO0000003HM

For Optimus

<28> UMA_HDMI_TXC+	CV336	0.1U_0402_10V7K	IHDMI@	UMA_DVI_TXC+
<28> UMA_HDMI_TXC-	CV337	0.1U_0402_10V7K	IHDMI@	UMA_DVI_TXC-
<28> UMA_HDMI_TX0+	CV338	0.1U_0402_10V7K	IHDMI@	UMA_DVI_TXD0+
<28> UMA_HDMI_TX0-	CV339	0.1U_0402_10V7K	IHDMI@	UMA_DVI_TXD0-
<28> UMA_HDMI_TX1+	CV340	0.1U_0402_10V7K	IHDMI@	UMA_DVI_TXD1+
<28> UMA_HDMI_TX1-	CV341	0.1U_0402_10V7K	IHDMI@	UMA_DVI_TXD1-
<28> UMA_HDMI_TX2+	CV342	0.1U_0402_10V7K	IHDMI@	UMA_DVI_TXD2+
<28> UMA_HDMI_TX2-	CV343	0.1U_0402_10V7K	IHDMI@	UMA_DVI_TXD2-

For DISCRETE

<15> VGA_HDMI_CLK+	CV328	0.1U_0402_10V7K	DHDMI@	VGA_DVI_TXC+
<15> VGA_HDMI_CLK-	CV329	0.1U_0402_10V7K	DHDMI@	VGA_DVI_TXC-
<15> VGA_HDMI_TX0+	CV330	0.1U_0402_10V7K	DHDMI@	VGA_DVI_TXD0+
<15> VGA_HDMI_TX0-	CV331	0.1U_0402_10V7K	DHDMI@	VGA_DVI_TXD0-
<15> VGA_HDMI_TX1+	CV332	0.1U_0402_10V7K	DHDMI@	VGA_DVI_TXD1+
<15> VGA_HDMI_TX1-	CV333	0.1U_0402_10V7K	DHDMI@	VGA_DVI_TXD1-
<15> VGA_HDMI_TX2+	CV334	0.1U_0402_10V7K	DHDMI@	VGA_DVI_TXD2+
<15> VGA_HDMI_TX2-	CV335	0.1U_0402_10V7K	DHDMI@	VGA_DVI_TXD2-

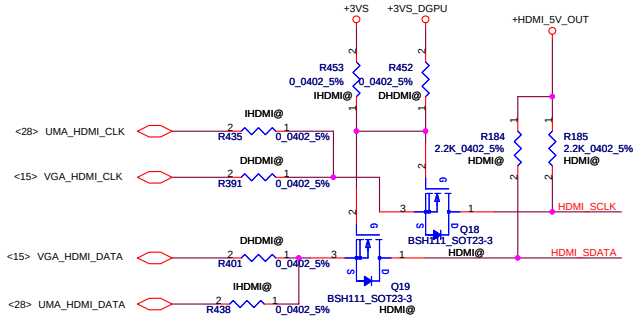

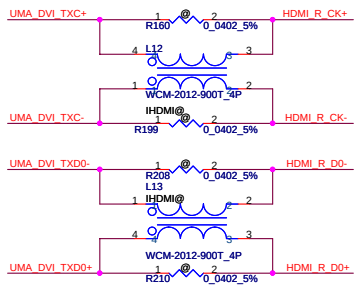

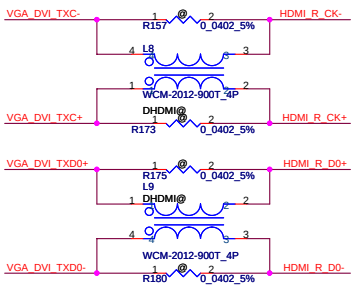

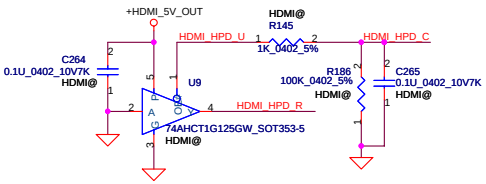

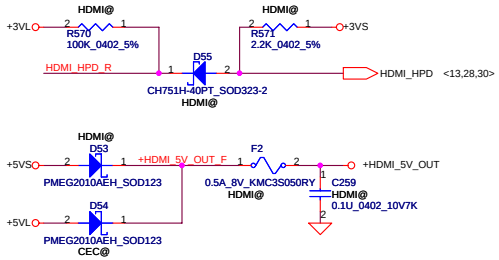

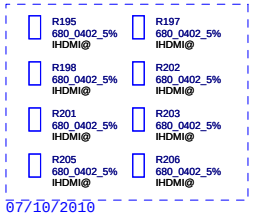

07/10/2010
Intel DG P.132

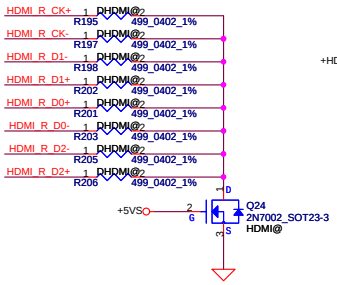

HDMI Connector

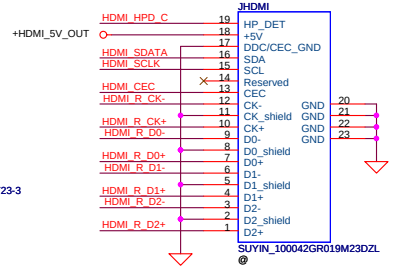

Security Classification	Compal Secret Data		
Issued Date	2011/12/14	Deciphered Date	2012/12/31

THIS SHEET OF ENGINEERING DRAWING IS THE PROPRIETARY PROPERTY OF COMPAL ELECTRONICS, INC. AND CONTAINS CONFIDENTIAL AND TRADE SECRET INFORMATION. THIS SHEET MAY NOT BE TRANSFERED FROM THE CUSTODY OF THE COMPETENT DIVISION OF R&D DEPARTMENT EXCEPT AS AUTHORIZED BY COMPAL ELECTRONICS, INC. NEITHER THIS SHEET NOR THE INFORMATION IT CONTAINS MAY BE USED BY OR DISCLOSED TO ANY THIRD PARTY WITHOUT PRIOR WRITTEN CONSENT OF COMPAL ELECTRONICS, INC.

Compal Electronics, Inc.

Title: SCHEMATICS, MB A8391

Size | Document Number: 4019HG | Rev: B

Date: Thursday, February 16, 2012 | Sheet 24 of 61

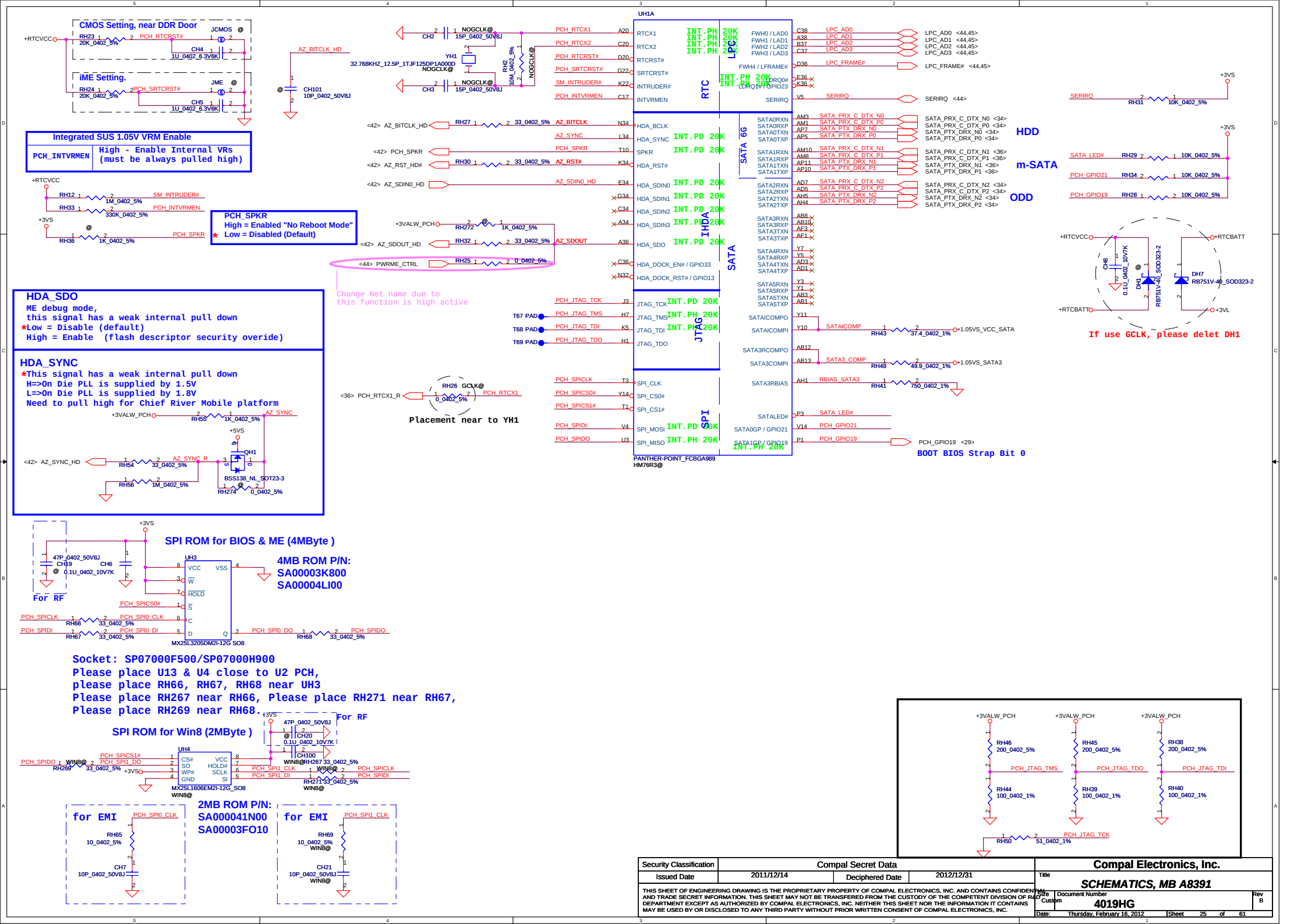

Security Classification	Compal Secret Data		
Issued Date	2011/12/14	Deciphered Date	2012/12/31

THIS SHEET OF ENGINEERING DRAWING IS THE PROPRIETARY PROPERTY OF COMPAL ELECTRONICS, INC. AND CONTAINS CONFIDENTIAL AND TRADE SECRET INFORMATION. THIS SHEET MAY NOT BE TRANSFERED FROM THE CUSTODY OF THE COMPETENT DIVISION OF R&D DEPARTMENT EXCEPT AS AUTHORIZED BY COMPAL ELECTRONICS, INC. NEITHER THIS SHEET NOR THE INFORMATION IT CONTAINS MAY BE USED BY OR DISCLOSED TO ANY THIRD PARTY WITHOUT PRIOR WRITTEN CONSENT OF COMPAL ELECTRONICS, INC.

Compal Electronics, Inc.

Title: ***SCHEMATICS, MB A8391***

Size: Custom | Document Number: **4019HG** | Rev: B

Date: Thursday, February 16, 2012 | Sheet 25 of 61

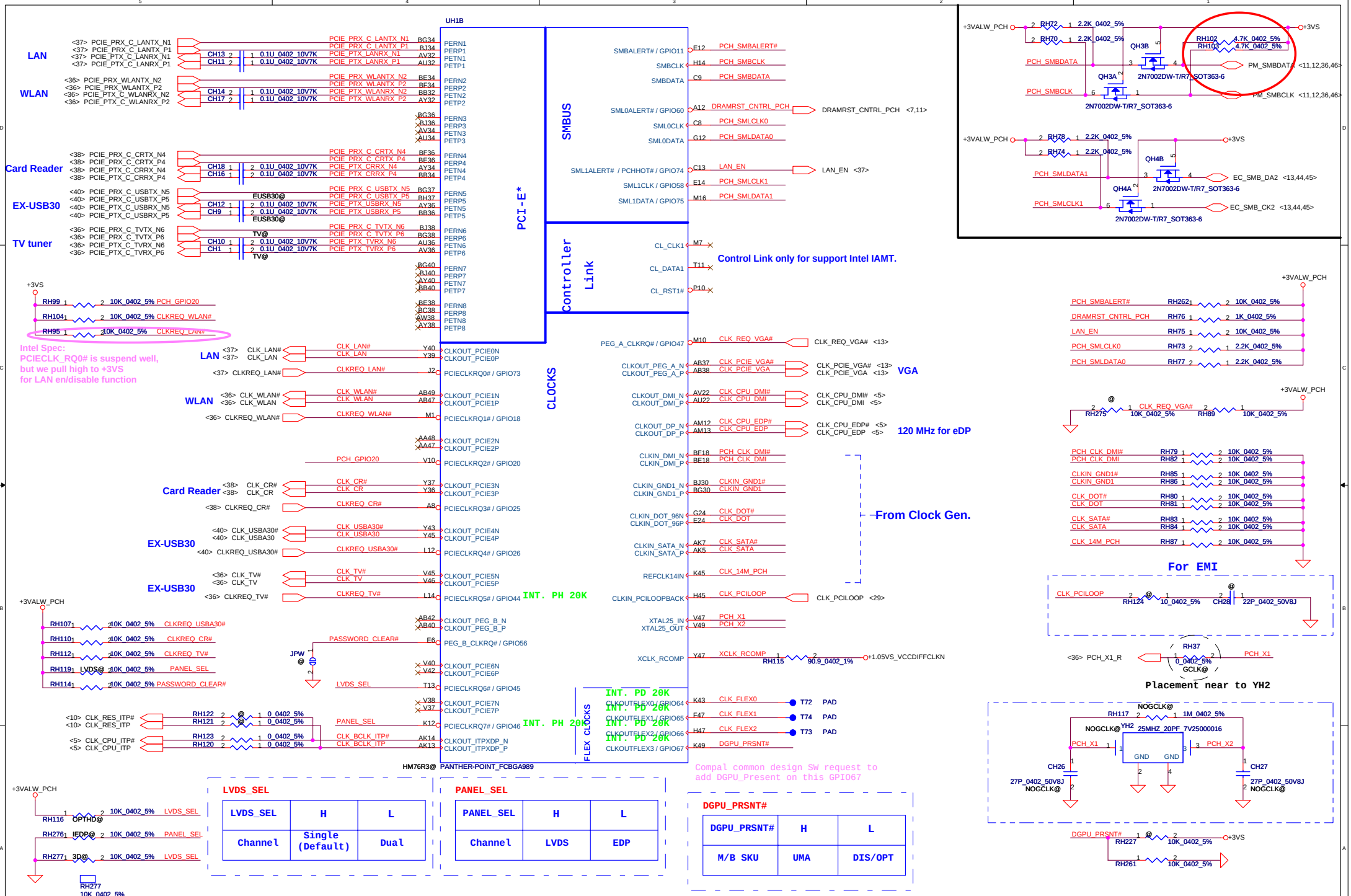

LVDS_SEL

LVDS_SEL	H	L
Channel	Single (Default)	Dual

PANEL_SEL

PANEL_SEL	H	L
Channel	LVDS	EDP

DGPU_PRSNT#

DGPU_PRSNT#	H	L
M/B SKU	UMA	DIS/OPT

Security Classification	Compal Secret Data			Compal Electronics, Inc.
Issued Date	2011/12/14	Deciphered Date	2012/12/31	Title: SCHEMATICS, MB A8391
				Size: Custom; Document Number: 4019HG; Rev: B
				Date: Thursday, February 16, 2012; Sheet 26 of 61

THIS SHEET OF ENGINEERING DRAWING IS THE PROPRIETARY PROPERTY OF COMPAL ELECTRONICS, INC. AND CONTAINS CONFIDENTIAL AND TRADE SECRET INFORMATION. THIS SHEET MAY NOT BE TRANSFERED FROM THE CUSTODY OF THE COMPETENT DIVISION OF R&D DEPARTMENT EXCEPT AS AUTHORIZED BY COMPAL ELECTRONICS, INC. NEITHER THIS SHEET NOR THE INFORMATION IT CONTAINS MAY BE USED BY OR DISCLOSED TO ANY THIRD PARTY WITHOUT PRIOR WRITTEN CONSENT OF COMPAL ELECTRONICS, INC.

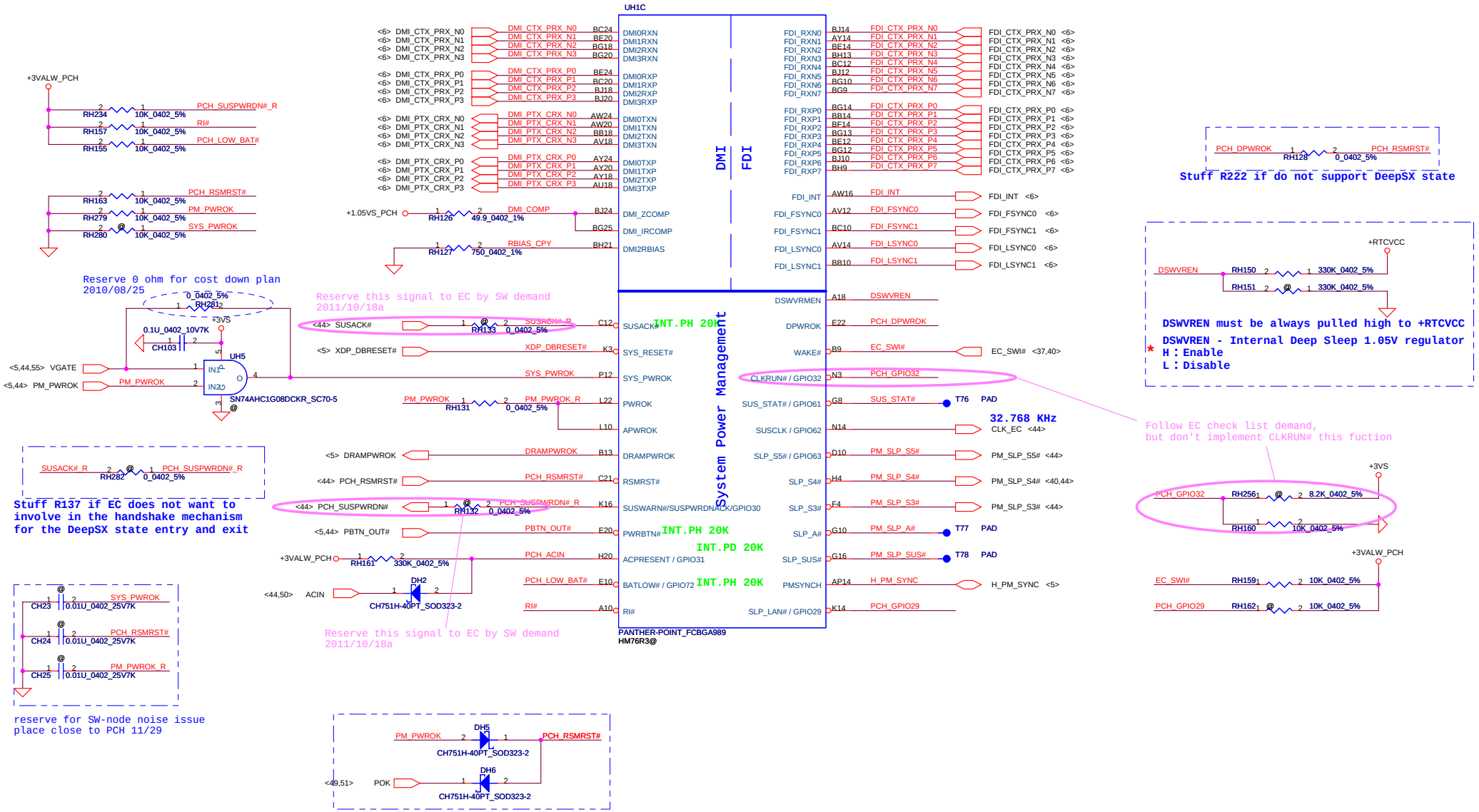

Security Classification	Compal Secret Data			Compal Electronics, Inc.
Issued Date	2011/12/14	Deciphered Date	2012/12/31	Title: SCHEMATICS, MB A8391
THIS SHEET OF ENGINEERING DRAWING IS THE PROPRIETARY PROPERTY OF COMPAL ELECTRONICS, INC. AND CONTAINS CONFIDENTIAL AND TRADE SECRET INFORMATION. THIS SHEET MAY NOT BE TRANSFERED FROM THE CUSTODY OF THE COMPETENT DIVISION OF R&D DEPARTMENT EXCEPT AS AUTHORIZED BY COMPAL ELECTRONICS, INC. NEITHER THIS SHEET NOR THE INFORMATION IT CONTAINS MAY BE USED BY OR DISCLOSED TO ANY THIRD PARTY WITHOUT PRIOR WRITTEN CONSENT OF COMPAL ELECTRONICS, INC.				Size: Custom; Document Number: 4019HG; Rev: B
				Date: Thursday, February 16, 2012; Sheet 27 of 61

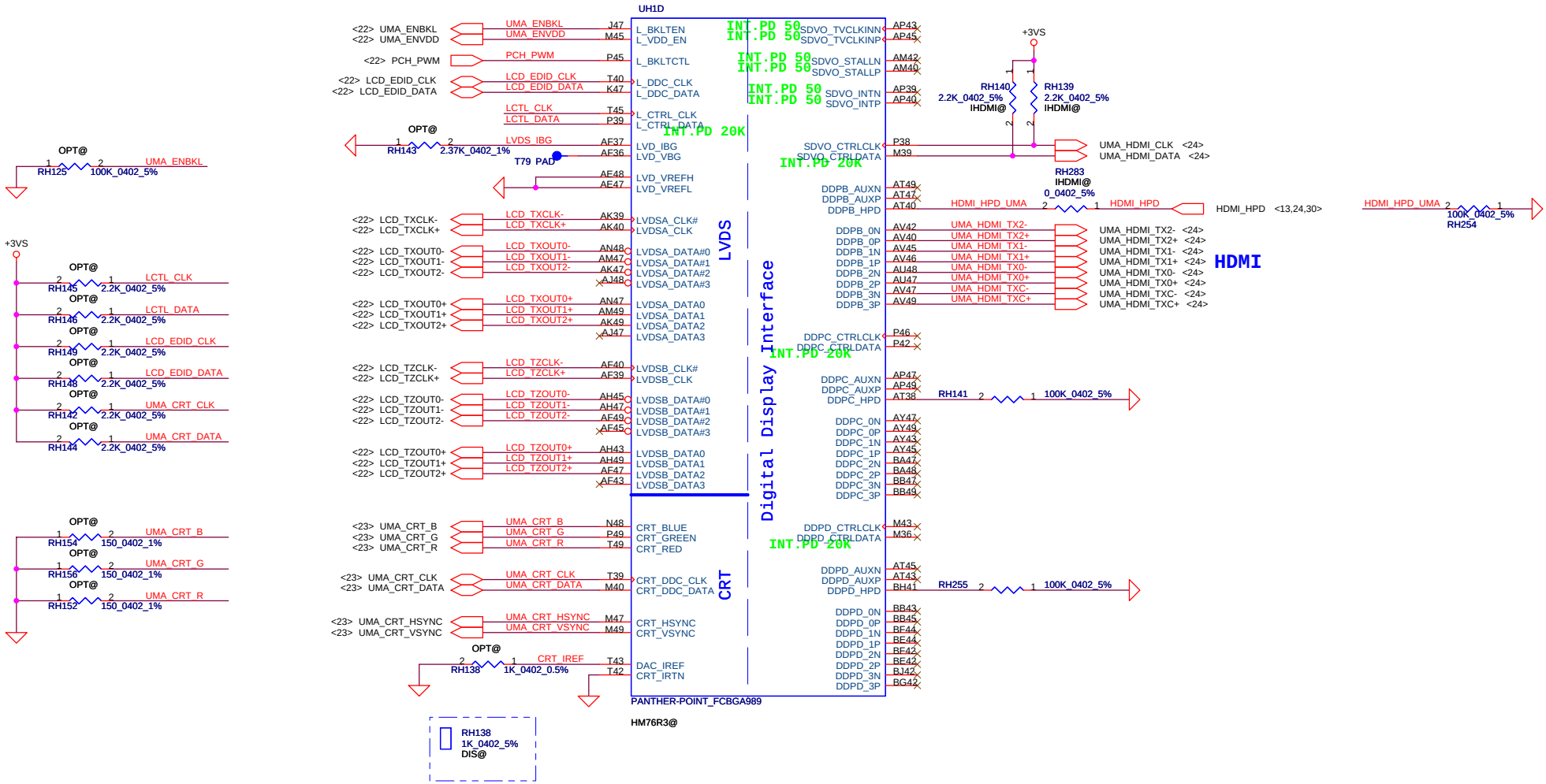

Security Classification	Compal Secret Data		
Issued Date	2011/12/14	Deciphered Date	2012/12/31

THIS SHEET OF ENGINEERING DRAWING IS THE PROPRIETARY PROPERTY OF COMPAL ELECTRONICS, INC. AND CONTAINS CONFIDENTIAL AND TRADE SECRET INFORMATION. THIS SHEET MAY NOT BE TRANSFERED FROM THE CUSTODY OF THE COMPETENT DIVISION OF R&D DEPARTMENT EXCEPT AS AUTHORIZED BY COMPAL ELECTRONICS, INC. NEITHER THIS SHEET NOR THE INFORMATION IT CONTAINS MAY BE USED BY OR DISCLOSED TO ANY THIRD PARTY WITHOUT PRIOR WRITTEN CONSENT OF COMPAL ELECTRONICS, INC.

Compal Electronics, Inc.

Title: ***SCHEMATICS, MB A8391***

Size: Custom | Document Number: **4019HG** | Rev: B

Date: Thursday, February 16, 2012 | Sheet 28 of 61

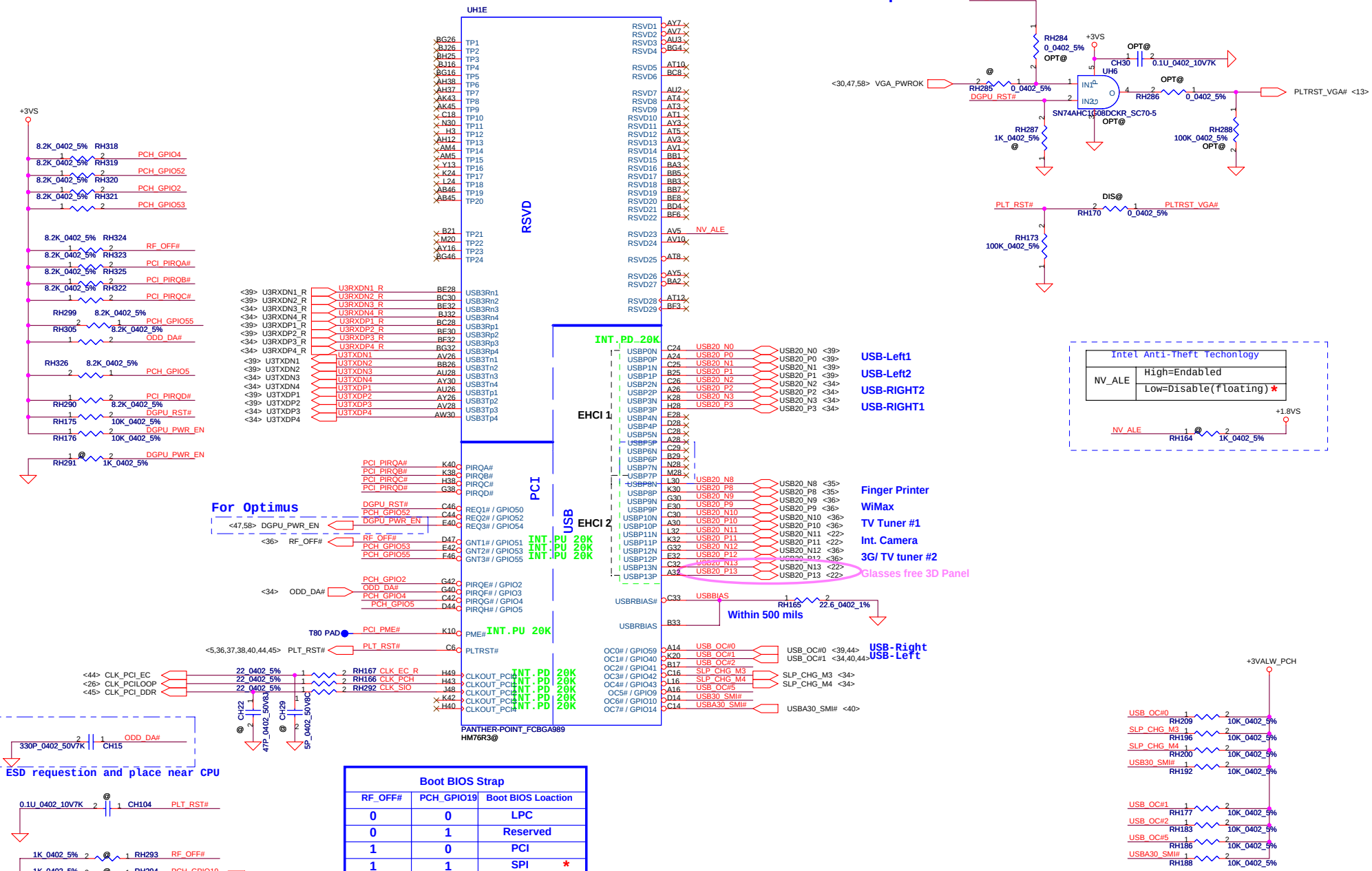

Boot BIOS Strap		
RF_OFF#	PCH_GPIO19	Boot BIOS Loaction
0	0	LPC
0	1	Reserved
1	0	PCI
1	1	SPI *

A16 Swap Override Strap	
WL_OFF#	* Low= A16 swap override Enable High= A16 swap override Disable

Security Classification	Compal Secret Data			Compal Electronics, Inc.
Issued Date	2011/12/14	Deciphered Date	2012/12/31	Title: SCHEMATICS, MB A8391

THIS SHEET OF ENGINEERING DRAWING IS THE PROPRIETARY PROPERTY OF COMPAL ELECTRONICS, INC. AND CONTAINS CONFIDENTIAL AND TRADE SECRET INFORMATION. THIS SHEET MAY NOT BE TRANSFERED FROM THE CUSTODY OF THE COMPETENT DIVISION OF R&D DEPARTMENT EXCEPT AS AUTHORIZED BY COMPAL ELECTRONICS, INC. NEITHER THIS SHEET NOR THE INFORMATION IT CONTAINS MAY BE USED BY OR DISCLOSED TO ANY THIRD PARTY WITHOUT PRIOR WRITTEN CONSENT OF COMPAL ELECTRONICS, INC.

Size	Document Number	Rev
Custom	4019HG	B

Date: Thursday, February 16, 2012 Sheet 29 of 61

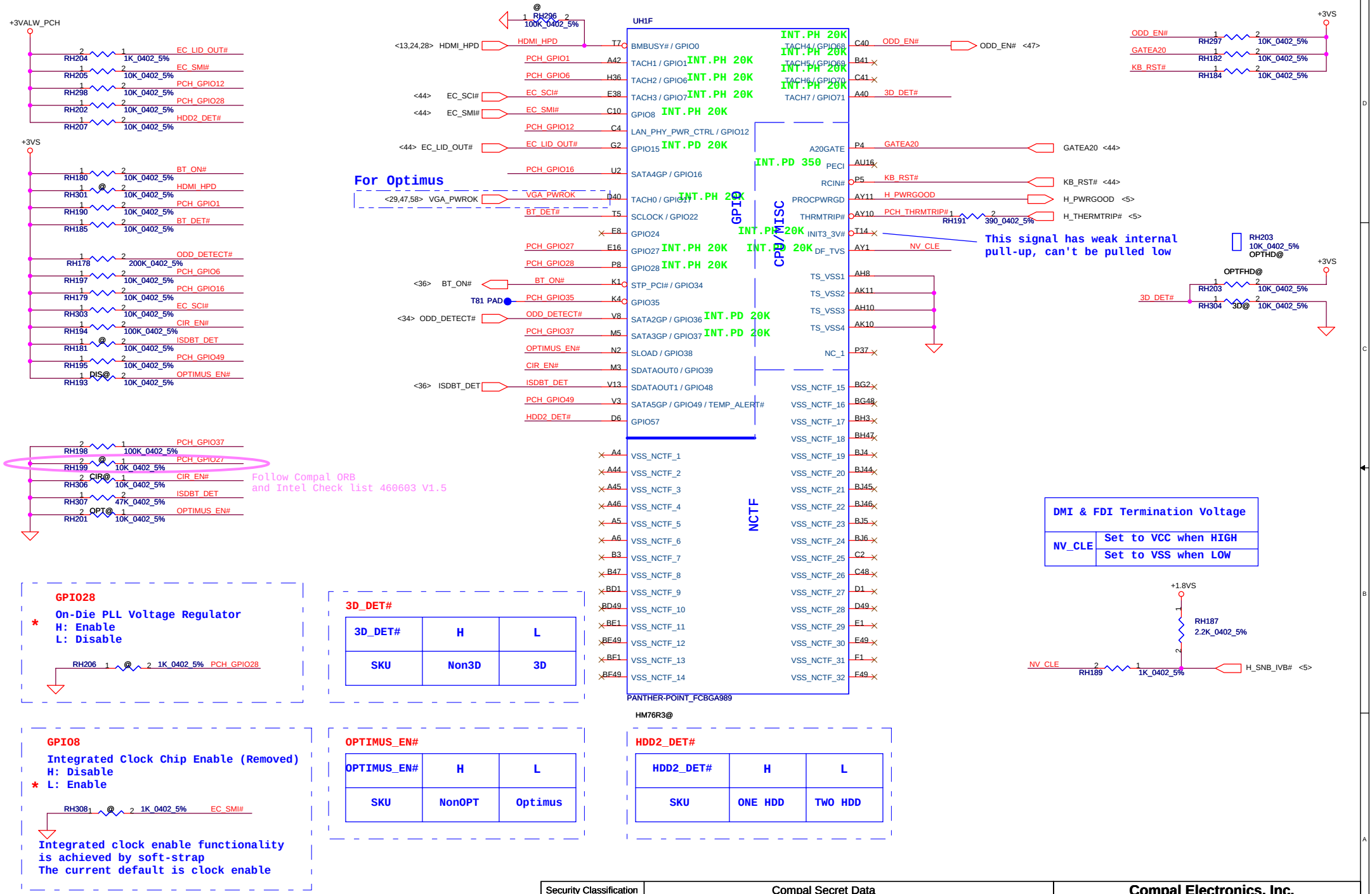

Security Classification	Compal Secret Data		
Issued Date	2011/12/14	Deciphered Date	2012/12/31

THIS SHEET OF ENGINEERING DRAWING IS THE PROPRIETARY PROPERTY OF COMPAL ELECTRONICS, INC. AND CONTAINS CONFIDENTIAL AND TRADE SECRET INFORMATION. THIS SHEET MAY NOT BE TRANSFERED FROM THE CUSTODY OF THE COMPETENT DIVISION OF R&D DEPARTMENT EXCEPT AS AUTHORIZED BY COMPAL ELECTRONICS, INC. NEITHER THIS SHEET NOR THE INFORMATION IT CONTAINS MAY BE USED BY OR DISCLOSED TO ANY THIRD PARTY WITHOUT PRIOR WRITTEN CONSENT OF COMPAL ELECTRONICS, INC.

Compal Electronics, Inc.

Title: ***SCHEMATICS, MB A8391***

Size: B | Document Number: **4019HG** | Rev: B

Date: Thursday, February 16, 2012 | Sheet 30 of 61

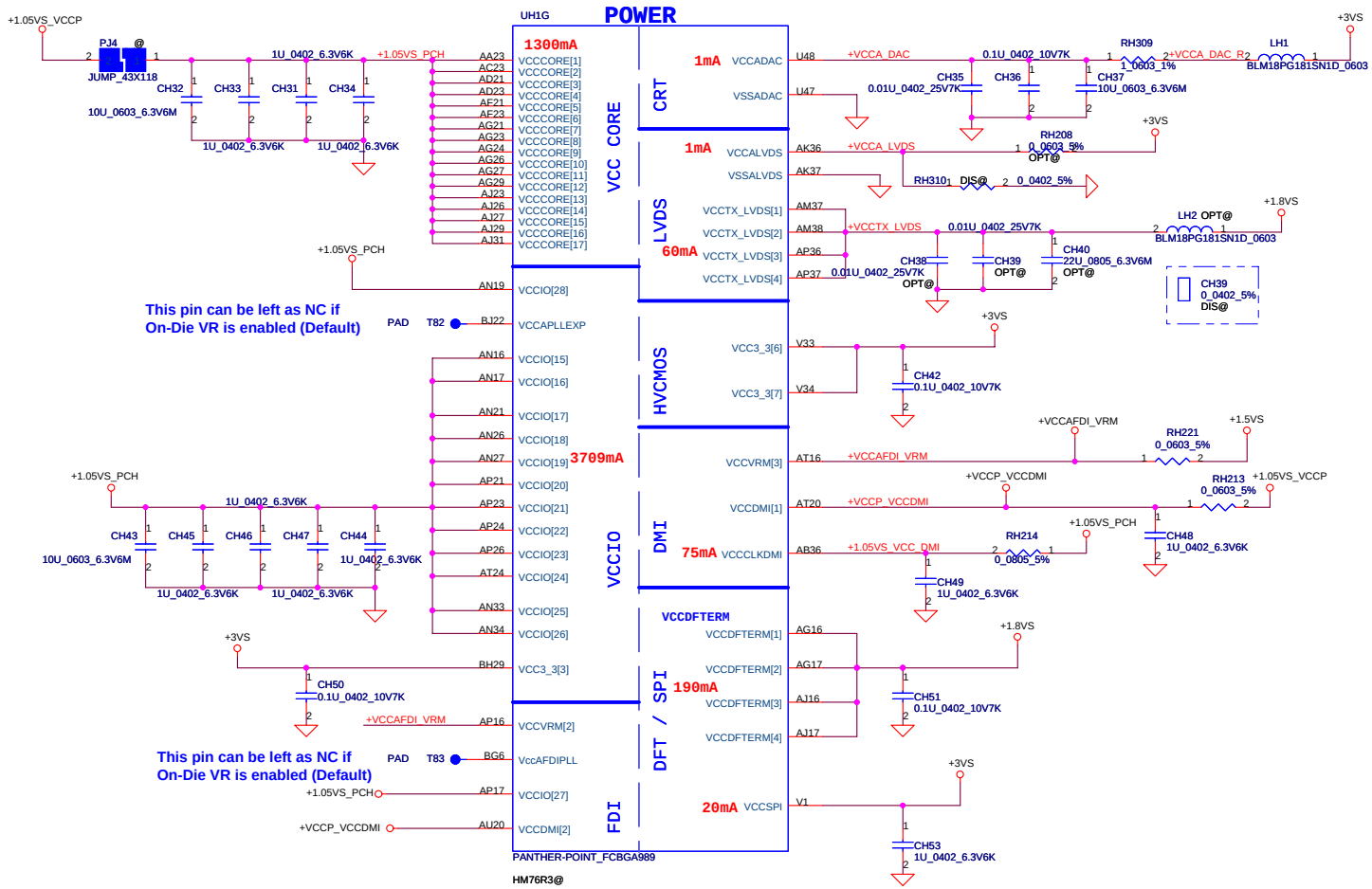

PCH Power Rail Table
Refer to PCH EDS R1.0

Voltage Rail	Voltage	S0 Iccmax Current (A)
V_PROC_IO	1.05	0.001
V5REF	5	0.001
V5REF_Sus	5	0.001
Vcc3_3	3.3	0.228
VccADAC	3.3	0.063
VccADPLLA	1.05	0.08
VccADPLLB	1.05	0.08
VccCore	1.05	1.7
VccDMI	1.1	0.047
VccIO	1.05	3.711
VccASW	1.05	0.903
VccSPI	3.3	0.01
VccDSW	3.3	0.001
VccDFTERM	1.8	0.002
VccRTC	3.3	N/A
VccSus3_3	3.3	0.095
VccSusHDA	3.3	0.01
VccVRM	1.5	0.167
VccCLKDMI	1.05	0.07
VccSSC	1.05	0.095
VccDIFFCLKN	1.05	0.055
VccALVDS	3.3	0.001
VccTX_LVDS	1.8	0.04

+3VALW to +3V_PCH

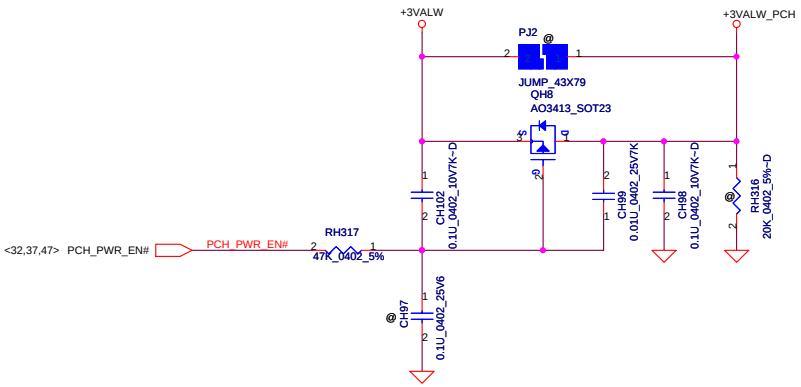

Security Classification	Compal Secret Data		
Issued Date	2011/12/14	Deciphered Date	2012/12/31

THIS SHEET OF ENGINEERING DRAWING IS THE PROPRIETARY PROPERTY OF COMPAL ELECTRONICS, INC. AND CONTAINS CONFIDENTIAL AND TRADE SECRET INFORMATION. THIS SHEET MAY NOT BE TRANSFERED FROM THE CUSTODY OF THE COMPETENT DIVISION OF R&D DEPARTMENT EXCEPT AS AUTHORIZED BY COMPAL ELECTRONICS, INC. NEITHER THIS SHEET NOR THE INFORMATION IT CONTAINS MAY BE USED BY OR DISCLOSED TO ANY THIRD PARTY WITHOUT PRIOR WRITTEN CONSENT OF COMPAL ELECTRONICS, INC.

Compal Electronics, Inc.

Title: ***SCHEMATICS, MB A8391***

Size: Custom | Document Number: **4019HG** | Rev: B

Date: Thursday, February 16, 2012 | Sheet 31 of 61

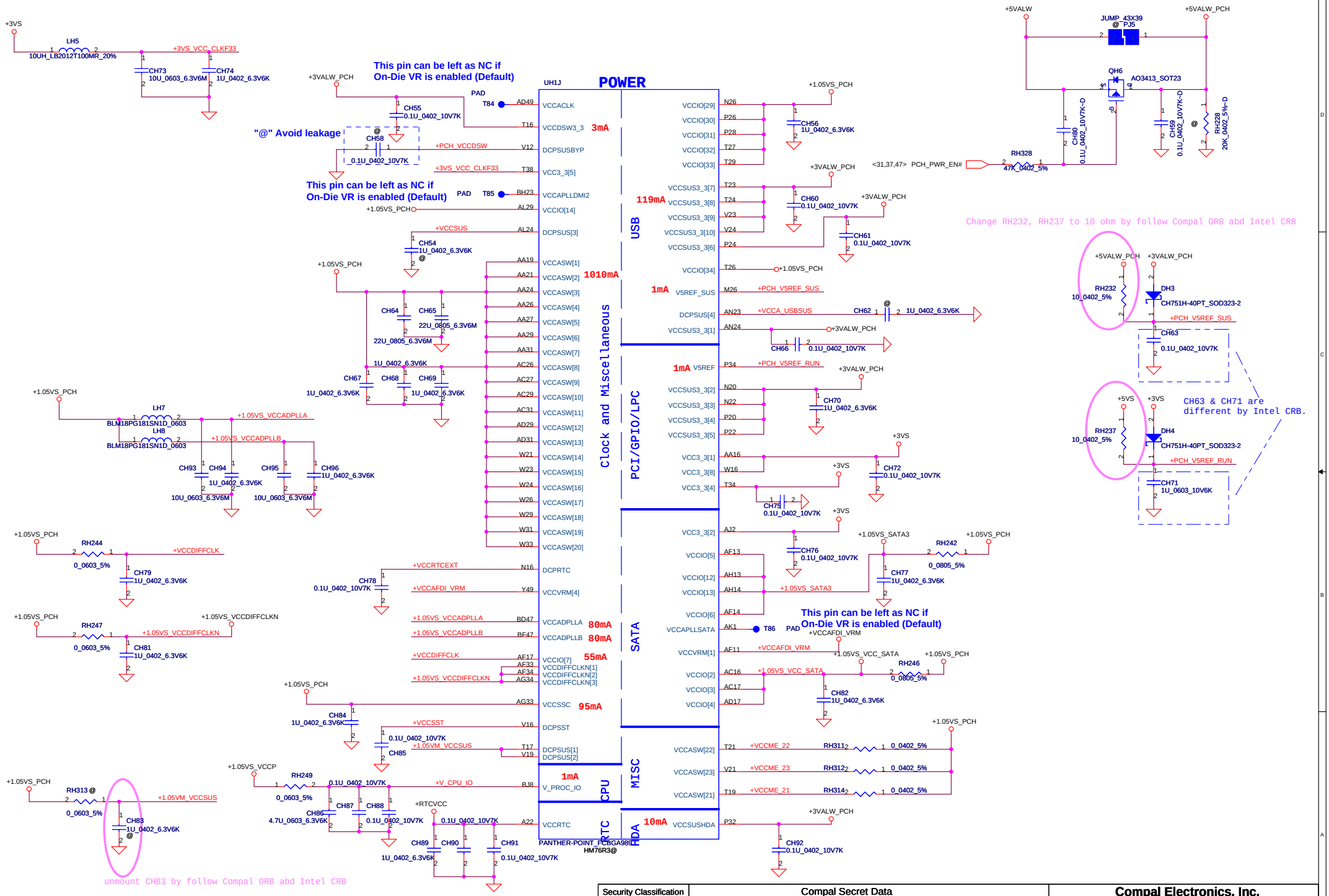

Security Classification	Compal Secret Data			Compal Electronics, Inc.
Issued Date	2011/12/14	Deciphered Date	2012/12/31	Title: SCHEMATICS, MB A8391
THIS SHEET OF ENGINEERING DRAWING IS THE PROPRIETARY PROPERTY OF COMPAL ELECTRONICS, INC. AND CONTAINS CONFIDENTIAL AND TRADE SECRET INFORMATION. THIS SHEET MAY NOT BE TRANSFERRED FROM THE CUSTODY OF THE COMPETENT DIVISION OF R&D DEPARTMENT EXCEPT AS AUTHORIZED BY COMPAL ELECTRONICS, INC. NEITHER THIS SHEET NOR THE INFORMATION IT CONTAINS MAY BE USED BY OR DISCLOSED TO ANY THIRD PARTY WITHOUT PRIOR WRITTEN CONSENT OF COMPAL ELECTRONICS, INC.				Size: Custom; Document Number: 4019HG; Rev: B
				Date: Thursday, February 16, 2012; Sheet 32 of 61

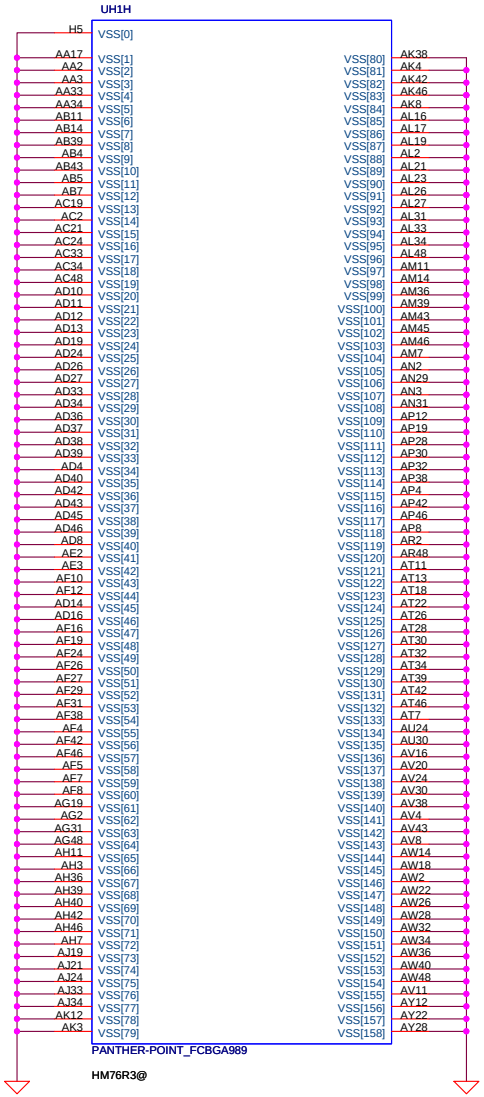

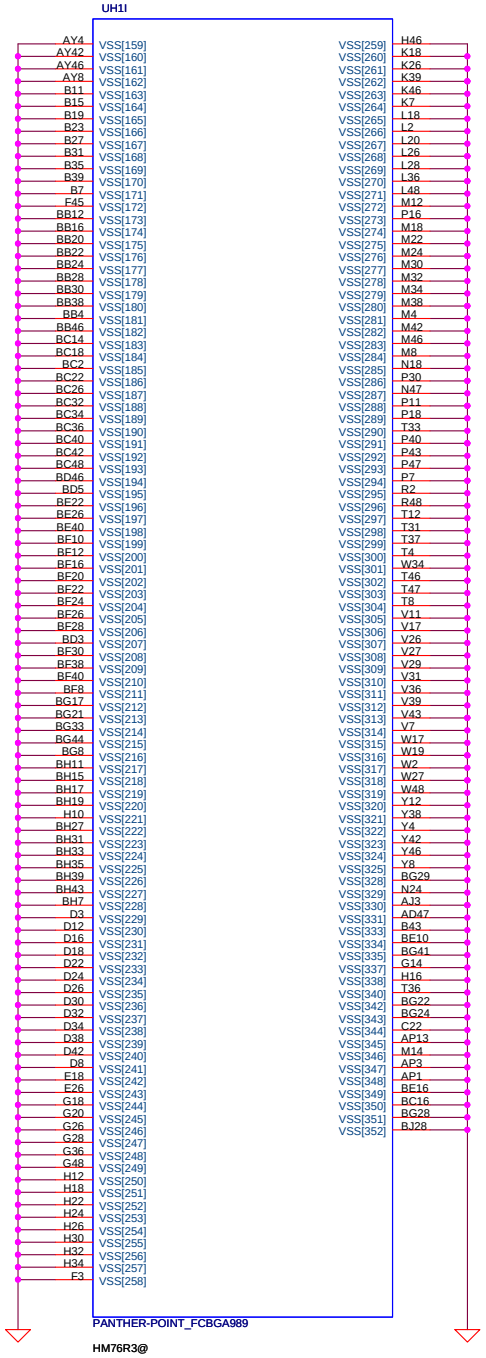

Security Classification	Compal Secret Data		
Issued Date	2011/12/14	Deciphered Date	2012/12/31

THIS SHEET OF ENGINEERING DRAWING IS THE PROPRIETARY PROPERTY OF COMPAL ELECTRONICS, INC. AND CONTAINS CONFIDENTIAL AND TRADE SECRET INFORMATION. THIS SHEET MAY NOT BE TRANSFERED FROM THE CUSTODY OF THE COMPETENT DIVISION OF R&D DEPARTMENT EXCEPT AS AUTHORIZED BY COMPAL ELECTRONICS, INC. NEITHER THIS SHEET NOR THE INFORMATION IT CONTAINS MAY BE USED BY OR DISCLOSED TO ANY THIRD PARTY WITHOUT PRIOR WRITTEN CONSENT OF COMPAL ELECTRONICS, INC.

Compal Electronics, Inc.

Title: ***SCHEMATICS, MB A8391***

Size: Custom | Document Number: **4019HG** | Rev: B

Date: Thursday, February 16, 2012 | Sheet 33 of 61

SATA HDD Conn.

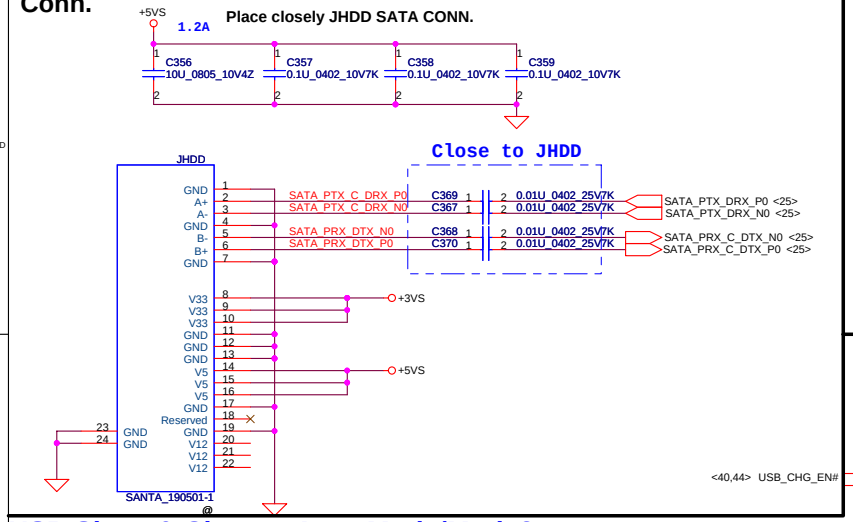

SATA ODD Conn

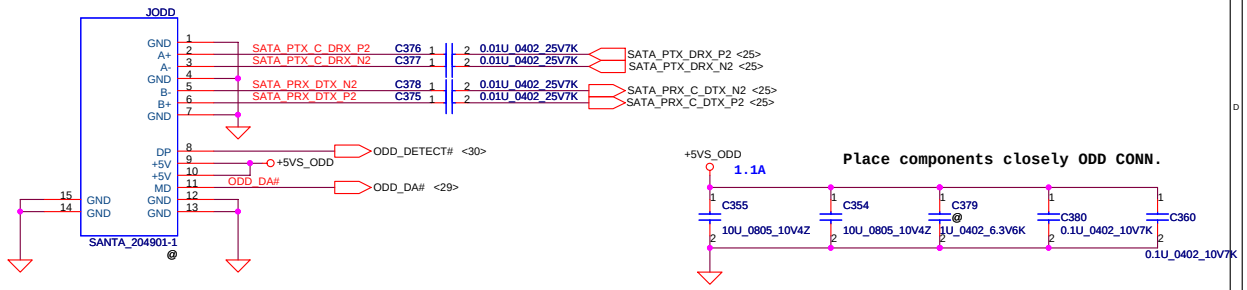

USB Right-Side

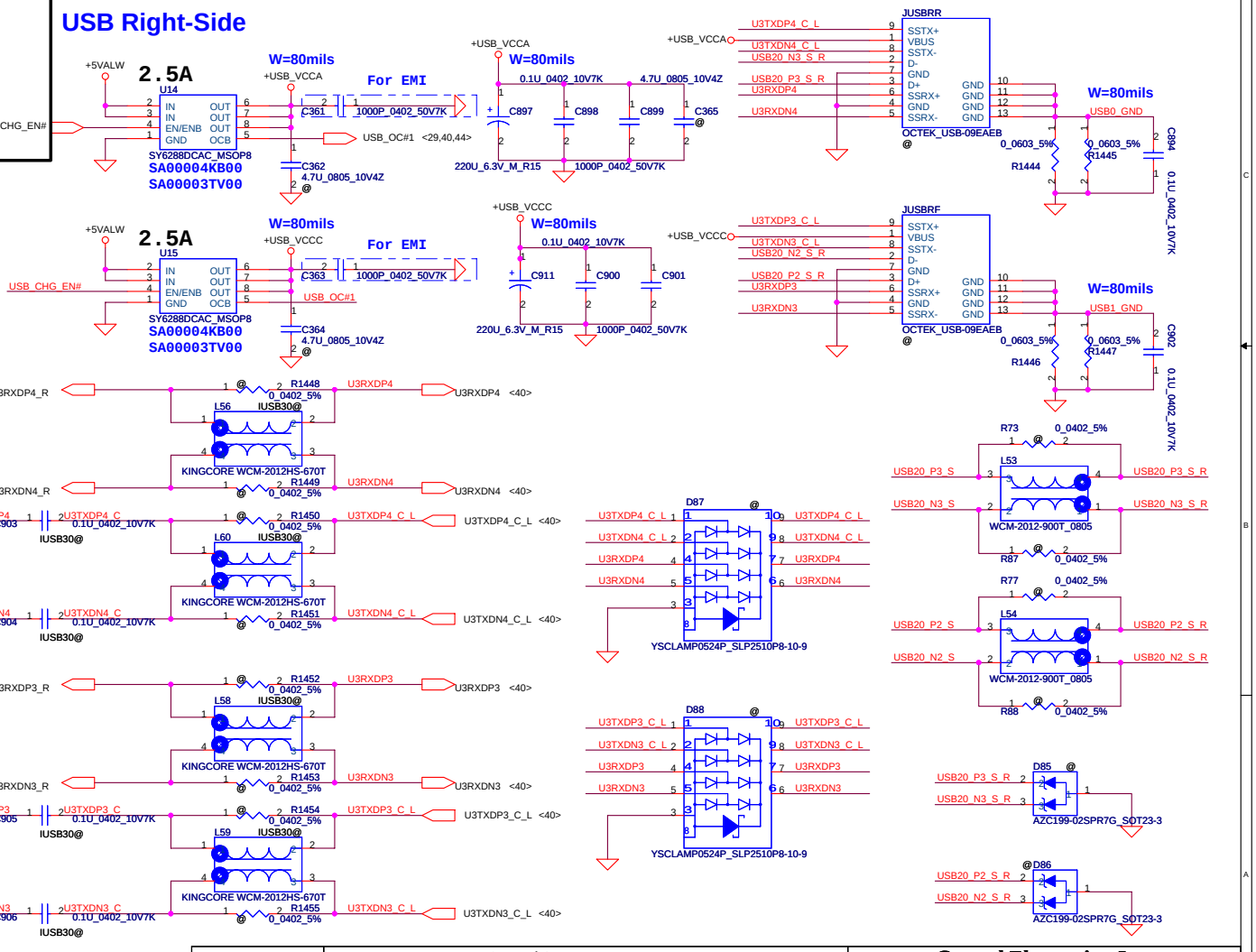

USB Sleep & Charge Auto-Mode/Mode3

MAX14600 & MAX14617			
CB0 SLP_CHG_M4	CB1 SLP_CHG_M3	CB2 (14617 only)	STATUS
0	0	0	AUTO MODE
0	1	0	Force Dedicated charger mode (MODE3)
1	0	0	Pass-Through (USB) Mode: Connect DP/DM to TDP/TDM
1	1	0	Pass-Through (USB) Mode with CDP Emulation: Auto Connect DP/DM to TDP/TDM depending on CDP status
X	X	1	Force Apple 2A Charger Mode: Apple 2A resistor dividers

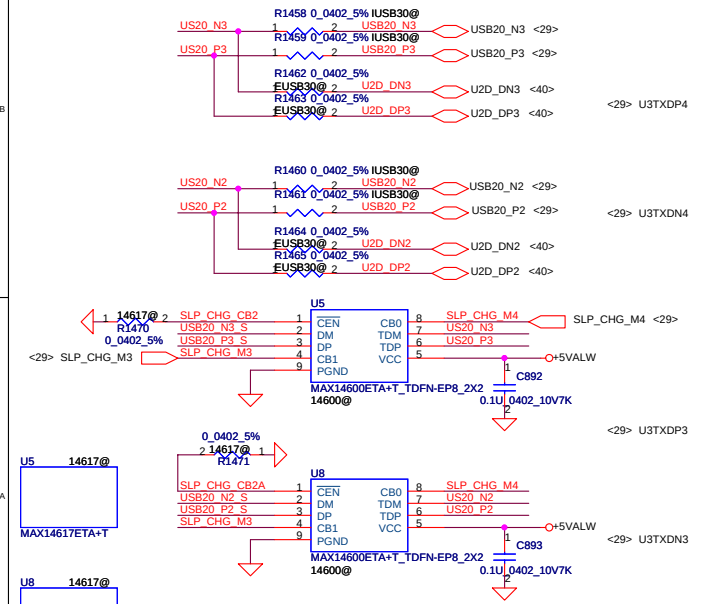

Security Classification	Compal Secret Data		
Issued Date	2011/12/14	Deciphered Date	2012/12/31

THIS SHEET OF ENGINEERING DRAWING IS THE PROPRIETARY PROPERTY OF COMPAL ELECTRONICS, INC. AND CONTAINS CONFIDENTIAL AND TRADE SECRET INFORMATION. THIS SHEET MAY NOT BE TRANSFERED FROM THE CUSTODY OF THE COMPETENT DIVISION OF R&D DEPARTMENT EXCEPT AS AUTHORIZED BY COMPAL ELECTRONICS, INC. NEITHER THIS SHEET NOR THE INFORMATION IT CONTAINS MAY BE USED BY OR DISCLOSED TO ANY THIRD PARTY WITHOUT PRIOR WRITTEN CONSENT OF COMPAL ELECTRONICS, INC.

Compal Electronics, Inc.

Title: **SCHEMATICS, MB A8391**

Size: | Document Number: **4019HG** | Rev: B

Date: Thursday, February 16, 2012 | Sheet 34 of 61

B-CAS Circuit

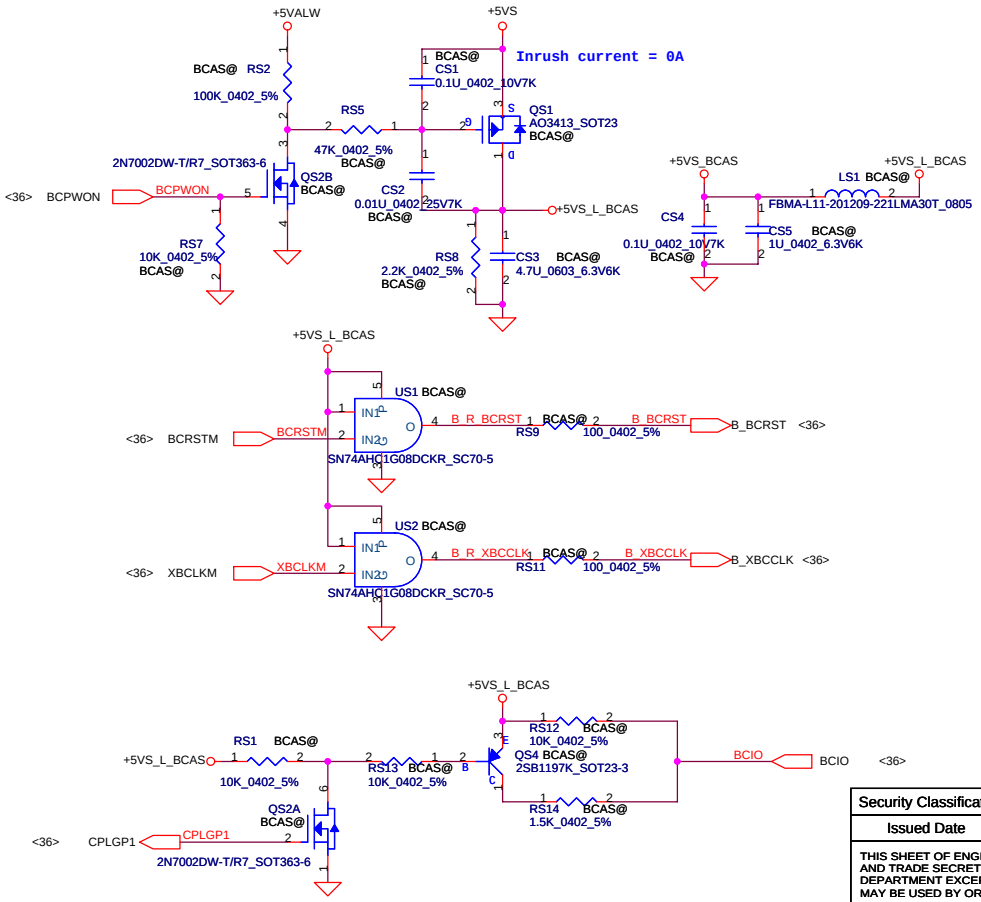

Finger printer

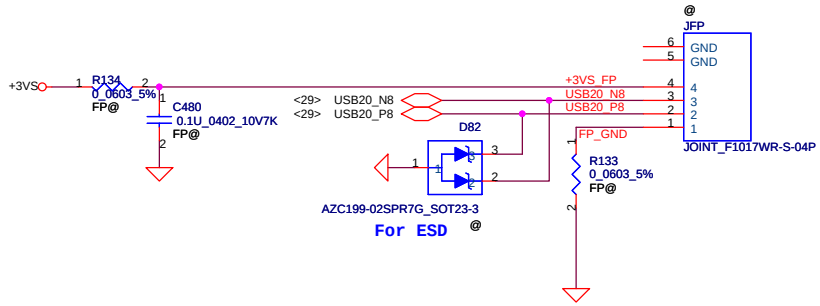

Security Classification	Compal Secret Data		
Issued Date	2011/12/14	Deciphered Date	2012/12/31

THIS SHEET OF ENGINEERING DRAWING IS THE PROPRIETARY PROPERTY OF COMPAL ELECTRONICS, INC. AND CONTAINS CONFIDENTIAL AND TRADE SECRET INFORMATION. THIS SHEET MAY NOT BE TRANSFERED FROM THE CUSTODY OF THE COMPETENT DIVISION OF R&D DEPARTMENT EXCEPT AS AUTHORIZED BY COMPAL ELECTRONICS, INC. NEITHER THIS SHEET NOR THE INFORMATION IT CONTAINS MAY BE USED BY OR DISCLOSED TO ANY THIRD PARTY WITHOUT PRIOR WRITTEN CONSENT OF COMPAL ELECTRONICS, INC.

Compal Electronics, Inc.

Title: **SCHEMATICS, MB A8391**

Size | Document Number: **4019HG** | Rev: B

Date: Thursday, February 16, 2012 | Sheet 35 of 61

Slot 1 Half PCIe Mini Card-WLAN/ WiMax

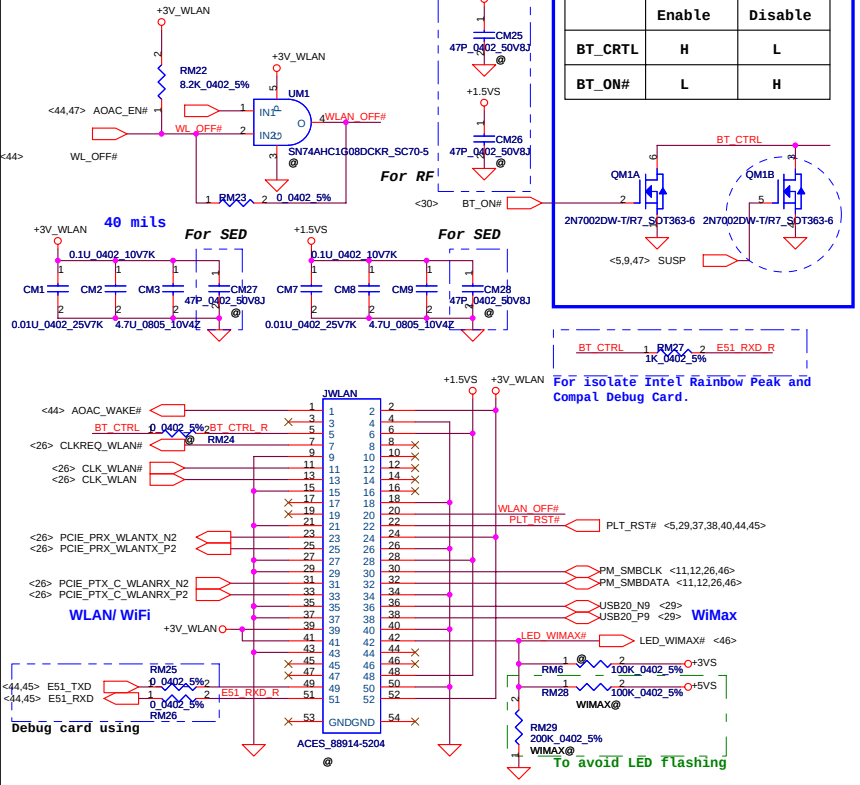

WLAN&BT Combo module circuits

	BT on module Enable	BT on module Disable
BT_CRTL	H	L
BT_ON#	L	H

Slot 2 Full PCIe Mini Card- 3G/ TV Tuner

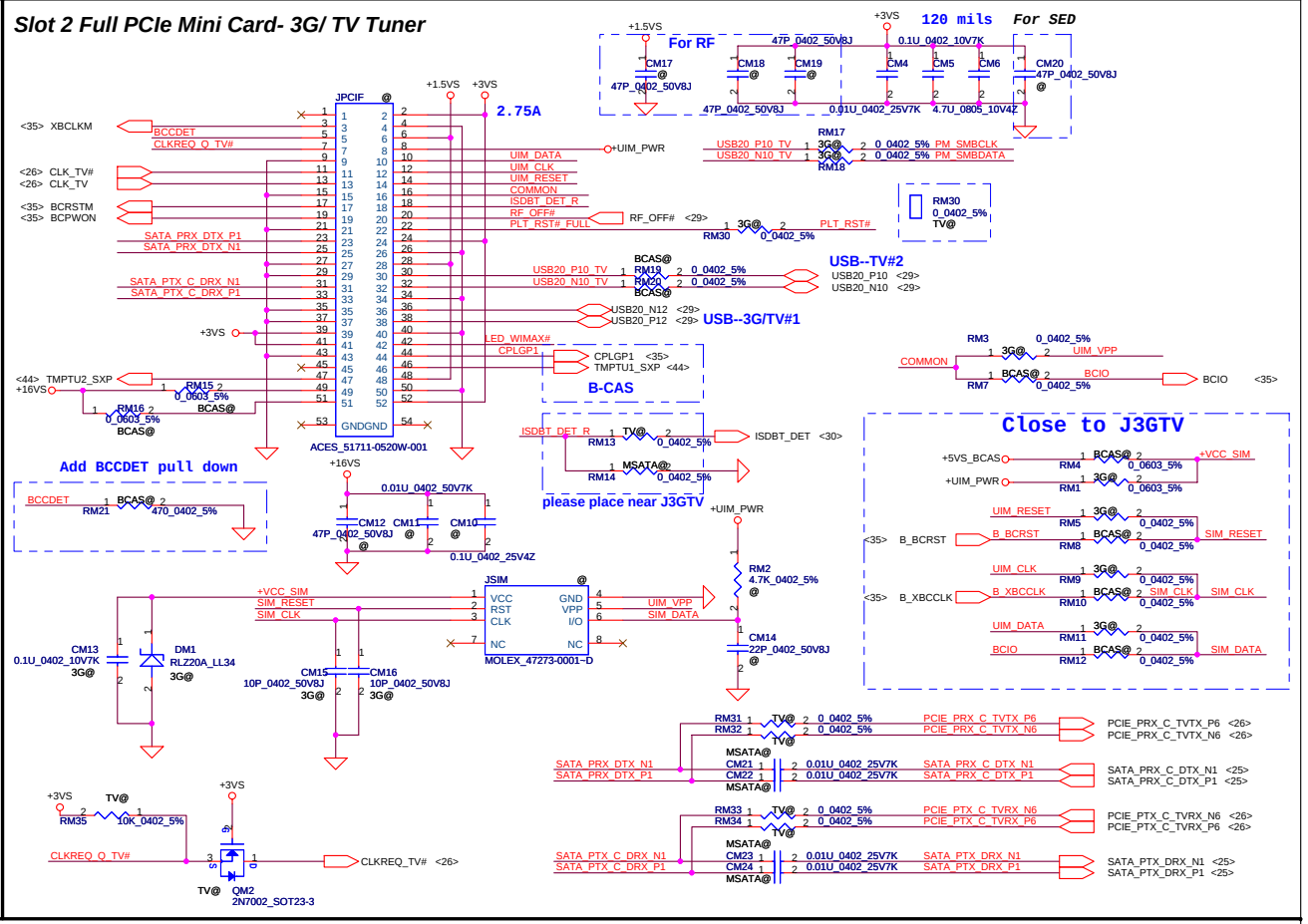

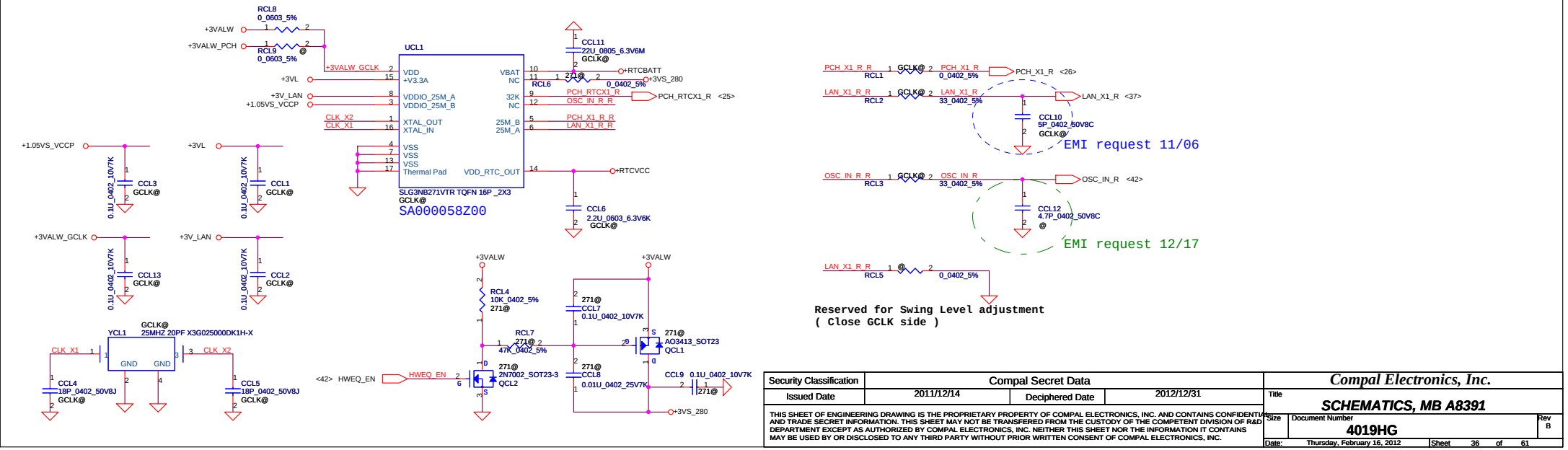

Security Classification	Compal Secret Data		
Issued Date	2011/12/14	Deciphered Date	2012/12/31

THIS SHEET OF ENGINEERING DRAWING IS THE PROPRIETARY PROPERTY OF COMPAL ELECTRONICS, INC. AND CONTAINS CONFIDENTIAL AND TRADE SECRET INFORMATION. THIS SHEET MAY NOT BE TRANSFERED FROM THE CUSTODY OF THE COMPETENT DIVISION OF R&D DEPARTMENT EXCEPT AS AUTHORIZED BY COMPAL ELECTRONICS, INC. NEITHER THIS SHEET NOR THE INFORMATION IT CONTAINS MAY BE USED BY OR DISCLOSED TO ANY THIRD PARTY WITHOUT PRIOR WRITTEN CONSENT OF COMPAL ELECTRONICS, INC.

Compal Electronics, Inc.

Title: SCHEMATICS, MB A8391

Size: | Document Number: 4019HG | Rev: B

Date: Thursday, February 16, 2012 | Sheet 36 of 61

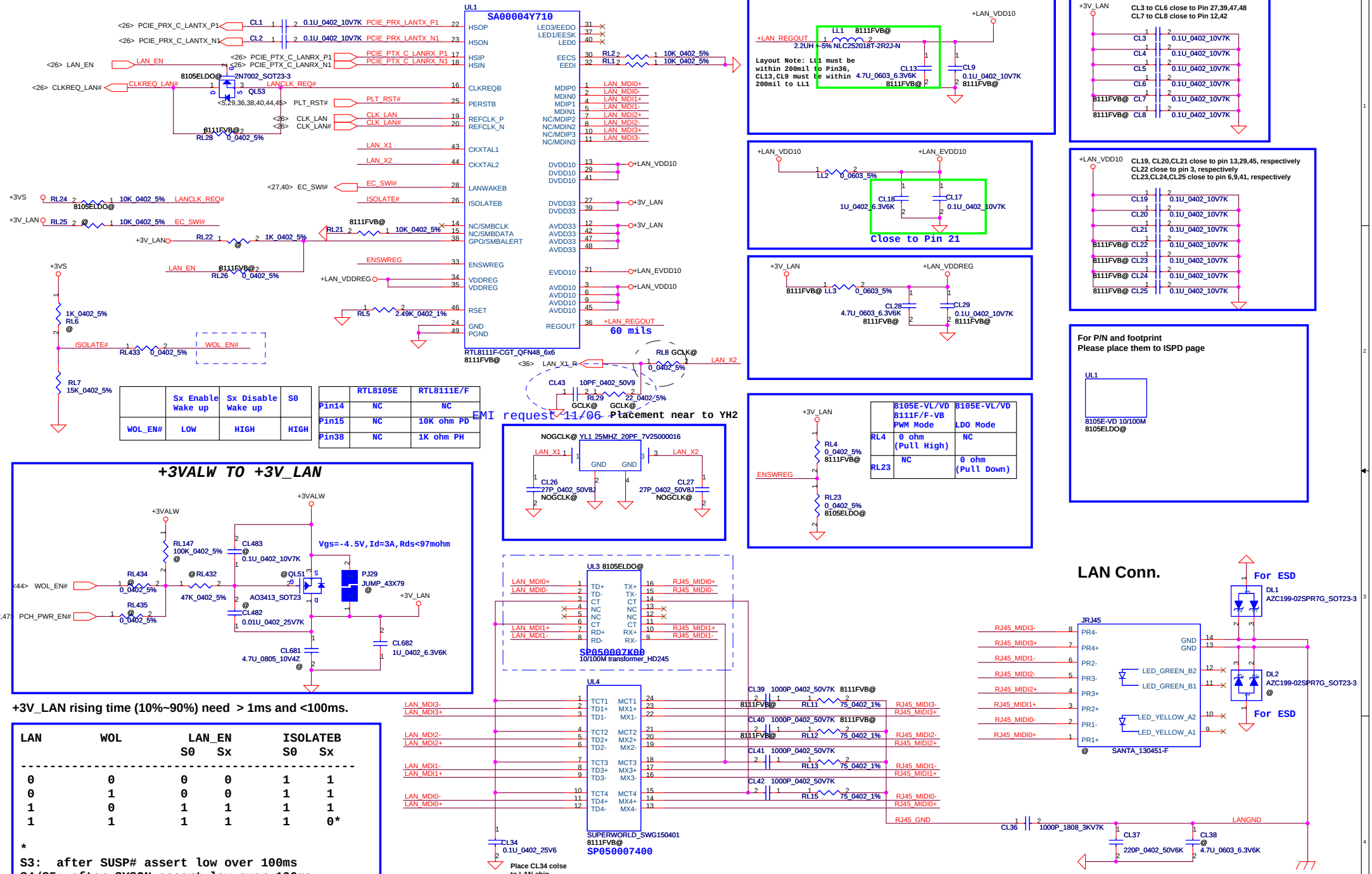

	Sx Enable Wake up	Sx Disable Wake up	S0
WOL_EN#	LOW	HIGH	HIGH

	RTL8105E	RTL8111E/F
Pin14	NC	NC
Pin15	NC	10K ohm PD
Pin38	NC	1K ohm PH

LAN	WOL	LAN_EN		ISOLATEB	
		S0	Sx	S0	Sx
0	0	0	0	1	1
0	1	0	0	1	1
1	0	1	1	1	1
1	1	1	1	1	0*

*
S3: after SUSP# assert low over 100ms
S4/S5: after SYSON assert low over 100ms

Security Classification	Compal Secret Data		
Issued Date	2011/12/14	Deciphered Date	2012/12/31

THIS SHEET OF ENGINEERING DRAWING IS THE PROPRIETARY PROPERTY OF COMPAL ELECTRONICS, INC. AND CONTAINS CONFIDENTIAL AND TRADE SECRET INFORMATION. THIS SHEET MAY NOT BE TRANSFERED FROM THE CUSTODY OF THE COMPETENT DIVISION OF R&D DEPARTMENT EXCEPT AS AUTHORIZED BY COMPAL ELECTRONICS, INC. NEITHER THIS SHEET NOR THE INFORMATION IT CONTAINS MAY BE USED BY OR DISCLOSED TO ANY THIRD PARTY WITHOUT PRIOR WRITTEN CONSENT OF COMPAL ELECTRONICS, INC.

Compal Electronics, Inc.

Title: SCHEMATICS, MB A8391

Size: Custom | Document Number: 4019HG | Rev: B

Date: Thursday, February 16, 2012 | Sheet 37 of 61

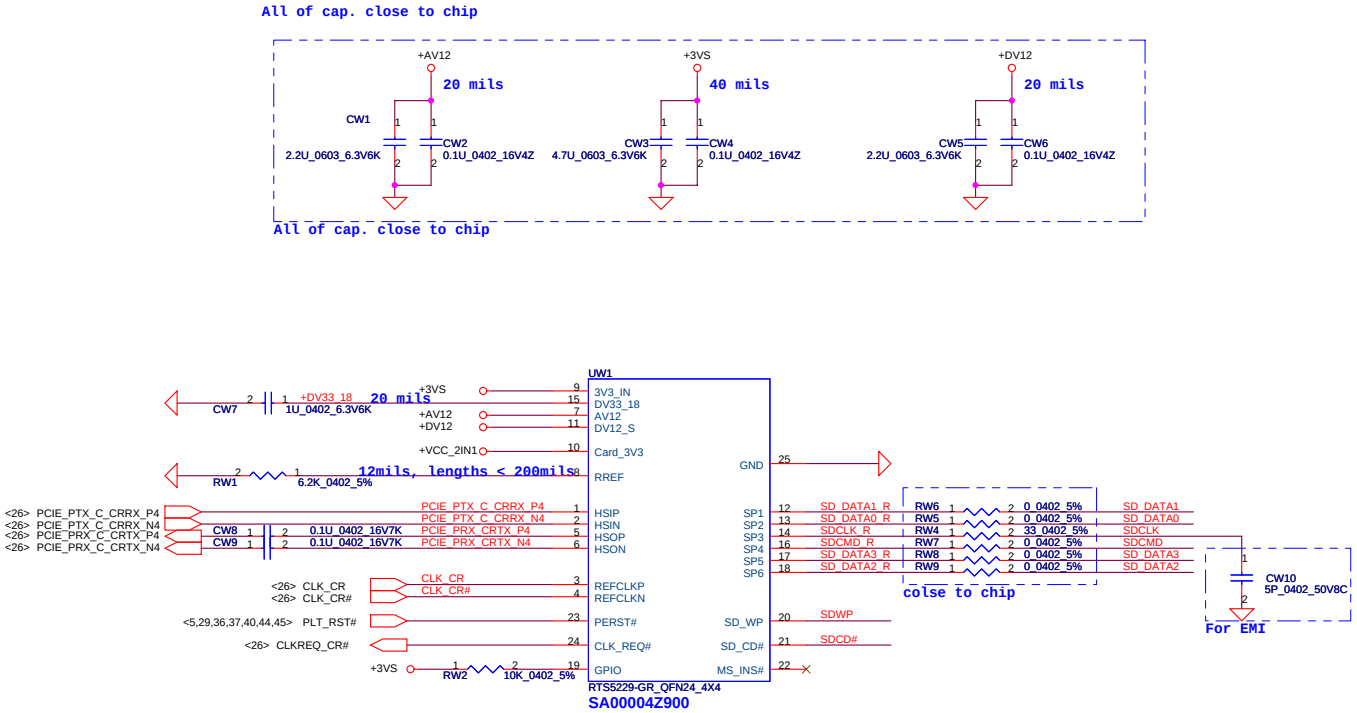

< 2 in 1 Card Reader >

Connector on bottom side

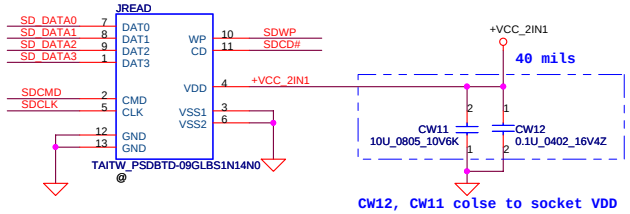

Security Classification	Compal Secret Data		
Issued Date	2011/12/14	Deciphered Date	2012/12/31

THIS SHEET OF ENGINEERING DRAWING IS THE PROPRIETARY PROPERTY OF COMPAL ELECTRONICS, INC. AND CONTAINS CONFIDENTIAL AND TRADE SECRET INFORMATION. THIS SHEET MAY NOT BE TRANSFERED FROM THE CUSTODY OF THE COMPETENT DIVISION OF R&D DEPARTMENT EXCEPT AS AUTHORIZED BY COMPAL ELECTRONICS, INC. NEITHER THIS SHEET NOR THE INFORMATION IT CONTAINS MAY BE USED BY OR DISCLOSED TO ANY THIRD PARTY WITHOUT PRIOR WRITTEN CONSENT OF COMPAL ELECTRONICS, INC.

Compal Electronics, Inc.

Title: **SCHEMATICS, MB A8391**

Size: Custom | Document Number: **4019HG** | Rev: B

Date: Thursday, February 16, 2012 | Sheet 38 of 61

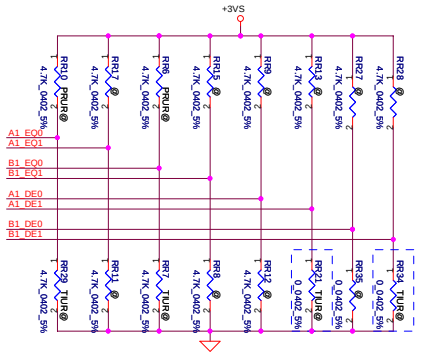

Note：
1) keep differential trace mismatch less than +/- 5mil
2) keep USB3 impedance follow Intel SPEC
3) Power / GND pin trace 10mil

TI: A_DE1、B_DE1 need 0ohm to GND.
If use Parade and need control
A_DE1 & B_DE1 please use 4.7K

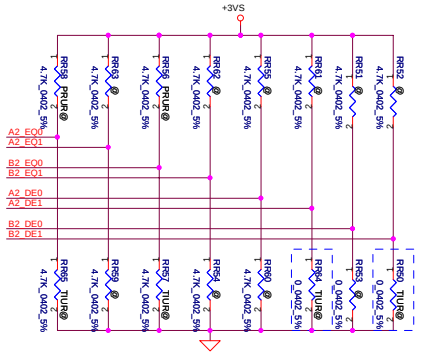

TI: A_DE1、B_DE1 need 0ohm to GND.
If use Parade and need control
A_DE1 & B_DE1 please use 4.7K

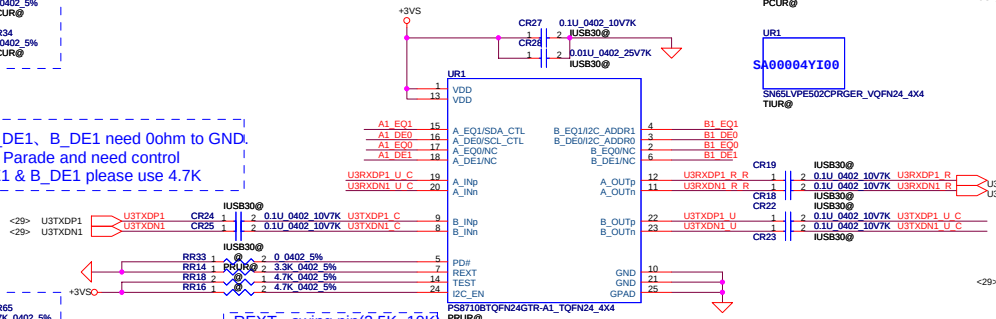

REXT - swing pin(2.5K~10K)
When test RX need add RR18

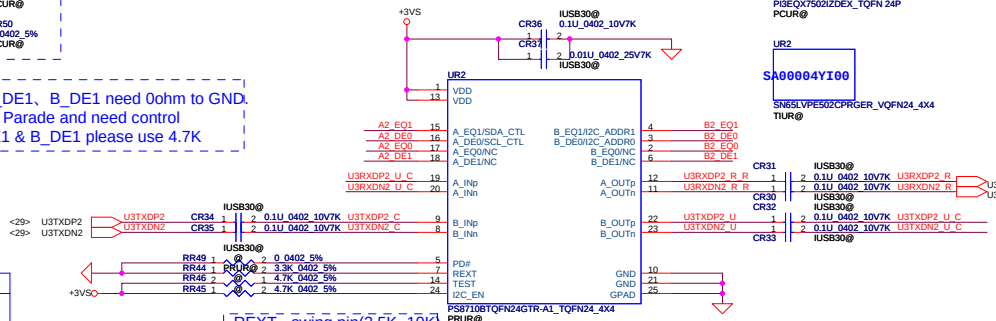

REXT - swing pin(2.5K~10K)
When test RX need add RR18

TI suggest EQ1(Pin2) & EQ2(Pin17) to pull Down use 7dB
DE1(Pin3) & DE2(Pin16) NC use 0dB
OS1(Pin4) & OS2(Pin15) NC use 1042mV

OUTPUT SWING AND EQ CONTROL (at 2.5 GHZ)			
OSx	TRANSISTION BIT AMPLITUDE (TYP mVpp)	EQx	EQUALIZATION (dB)
NC(default)	1042	NC(default)	0
0	908	0	7
1	1127	1	15
OUTPUT DE CONTROL (at 2.5GHZ)			
DEx	OSx = NC	OSx = 0	OSx = 0
NC(default)	0 dB	0 dB	0 dB
0	-3.5 dB	-2.2 dB	-4.4 dB
1	-6.0 dB	-5.2 dB	-6.0 dB
CONTROL PINS SETTINGS			
EN_RXD	DEVICE FUNCTION	CM	DEVICE FUNCTION
1(default)	Normal Operation	0(default)	Normal Operation
0	Sleep Mode	1	Compliance Test Mode

BOM Structure

Pericom	PCUR@
TI	TIUR@
Parade	PRUR@
USB3.0	USB30R@

Parade suggest EQ1(Pin2) & EQ2(Pin17) to pull High use 7dB. All control has internally pulled down at ~150Kohm,
If add ESD Diode A_DE0(Pin16) and B_DE0(Pin3) need pull high to 7dB otherwise 3dB

A_EQ1(Pin15)	A_EQ0(Pin17)		B_EQ1(Pin4)	B_EQ0(Pin2)	
L	L	adaptive EQ enable	L	L	adaptive EQ enable
L	H	Loss up to 7dB	L	H	Loss up to 7dB
H	L	Loss up to 14.5dB	H	L	Loss up to 14.5dB
H	H	Loss up to 11.5dB	H	H	Loss up to 11.5dB
A_DE1(Pin18)	**A_DE0(Pin16)**		**B_DE1(Pin6)**	**B_DE0(Pin3)**	
L	L	3.5dB	L	L	3.5dB
L	H	No de-emphasis	L	H	No de-emphasis
H	L	7dB	H	L	7dB
H	H	5dB with boost output swing	H	H	5dB with boost output swing

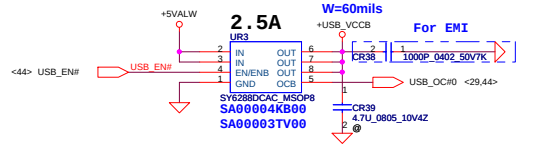

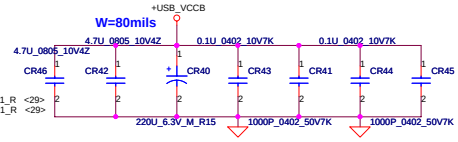

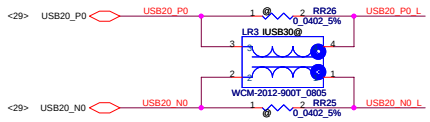

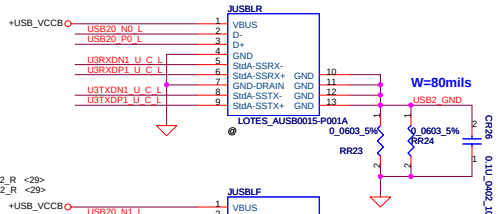

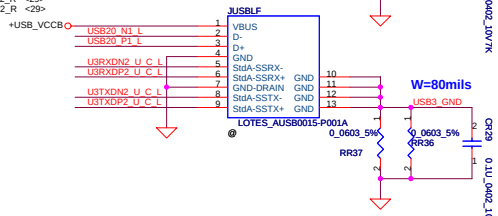

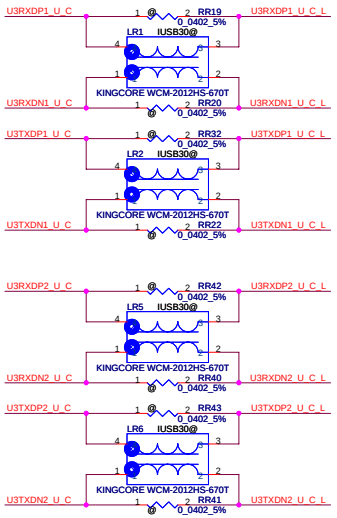

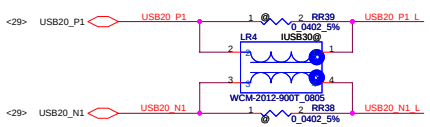

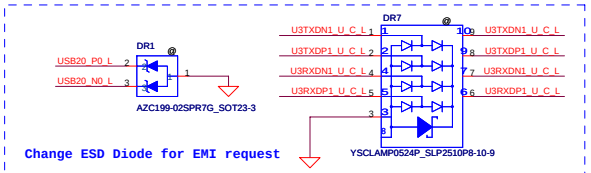

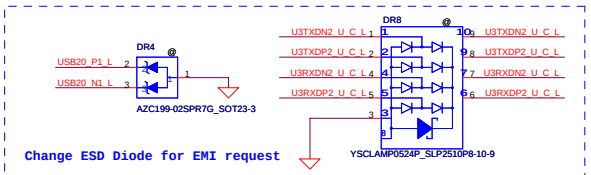

Security Classification	Compal Secret Data		
Issued Date	2011/12/14	Deciphered Date	2012/12/31

THIS SHEET OF ENGINEERING DRAWING IS THE PROPRIETARY PROPERTY OF COMPAL ELECTRONICS, INC. AND CONTAINS CONFIDENTIAL AND TRADE SECRET INFORMATION. THIS SHEET MAY NOT BE TRANSFERED FROM THE CUSTODY OF THE COMPETENT DIVISION OF R&D DEPARTMENT EXCEPT AS AUTHORIZED BY COMPAL ELECTRONICS, INC. NEITHER THIS SHEET NOR THE INFORMATION IT CONTAINS MAY BE USED BY OR DISCLOSED TO ANY THIRD PARTY WITHOUT PRIOR WRITTEN CONSENT OF COMPAL ELECTRONICS, INC.

Compal Electronics, Inc.

Title: SCHEMATICS, MB A8391

Size: Custom | Document Number: 4019HG | Rev: B

Date: Thursday, February 16, 2012 | Sheet 39 of 61

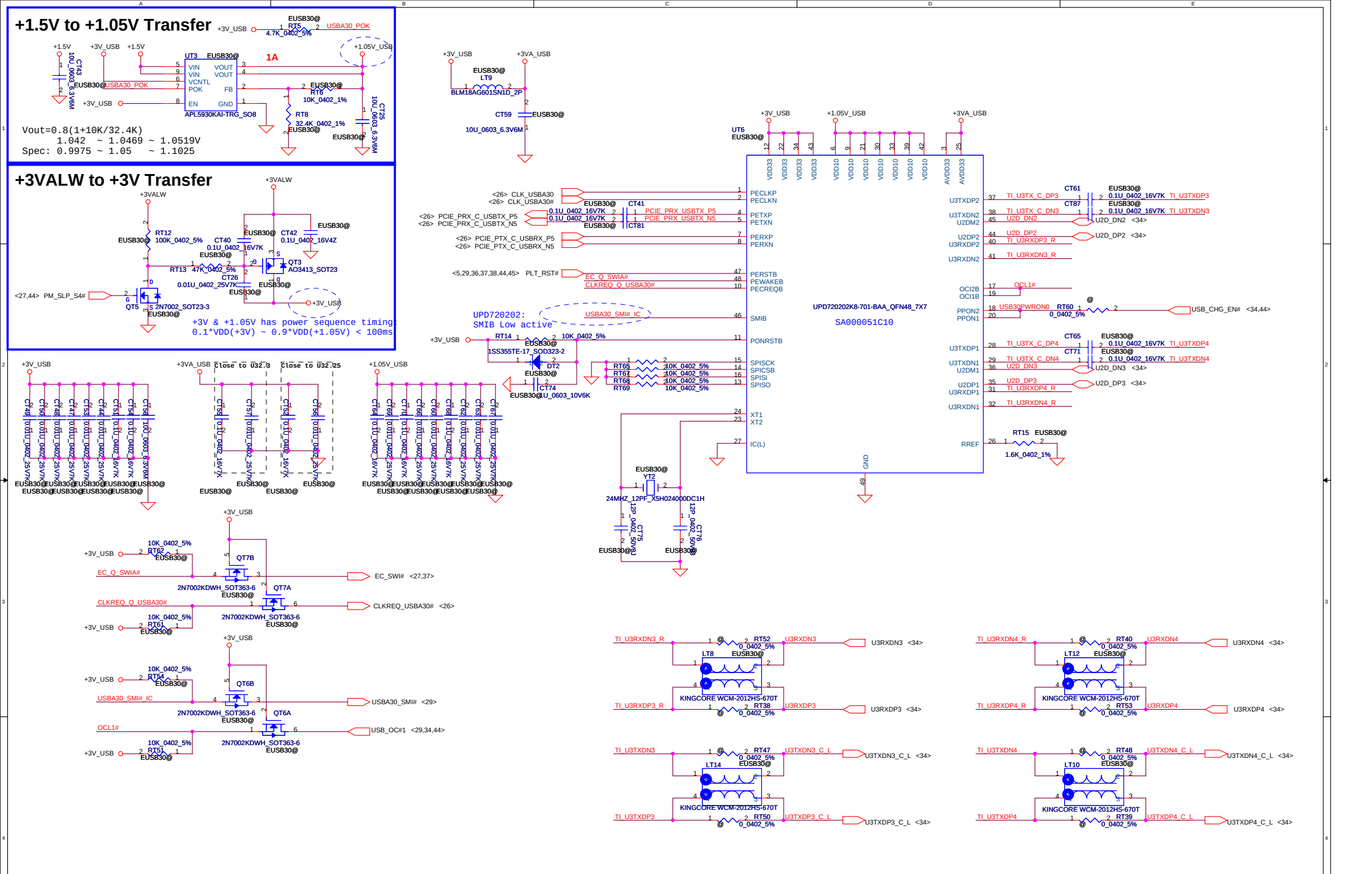

Security Classification	Compal Secret Data		
Issued Date	2011/12/14	Deciphered Date	2012/12/31

THIS SHEET OF ENGINEERING DRAWING IS THE PROPRIETARY PROPERTY OF COMPAL ELECTRONICS, INC. AND CONTAINS CONFIDENTIAL AND TRADE SECRET INFORMATION. THIS SHEET MAY NOT BE TRANSFERED FROM THE CUSTODY OF THE COMPETENT DIVISION OF R&D DEPARTMENT EXCEPT AS AUTHORIZED BY COMPAL ELECTRONICS, INC. NEITHER THIS SHEET NOR THE INFORMATION IT CONTAINS MAY BE USED BY OR DISCLOSED TO ANY THIRD PARTY WITHOUT PRIOR WRITTEN CONSENT OF COMPAL ELECTRONICS, INC.

Compal Electronics, Inc.

Title: ***SCHEMATICS, MB A8391***

Size	Document Number	Rev
Custom	4019HG	B

Date: Thursday, February 16, 2012 | Sheet 40 of 61

Security Classification	Compal Secret Data		
Issued Date	2011/12/14	Deciphered Date	2012/12/31

THIS SHEET OF ENGINEERING DRAWING IS THE PROPRIETARY PROPERTY OF COMPAL ELECTRONICS, INC. AND CONTAINS CONFIDENTIAL AND TRADE SECRET INFORMATION. THIS SHEET MAY NOT BE TRANSFERED FROM THE CUSTODY OF THE COMPETENT DIVISION OF R&D DEPARTMENT EXCEPT AS AUTHORIZED BY COMPAL ELECTRONICS, INC. NEITHER THIS SHEET NOR THE INFORMATION IT CONTAINS MAY BE USED BY OR DISCLOSED TO ANY THIRD PARTY WITHOUT PRIOR WRITTEN CONSENT OF COMPAL ELECTRONICS, INC.

Compal Electronics, Inc.

Title: ***SCHEMATICS, MB A8391***

Size	Document Number	Rev
Custom	4019HG	B

Date: Thursday, February 16, 2012 | Sheet 41 of 61

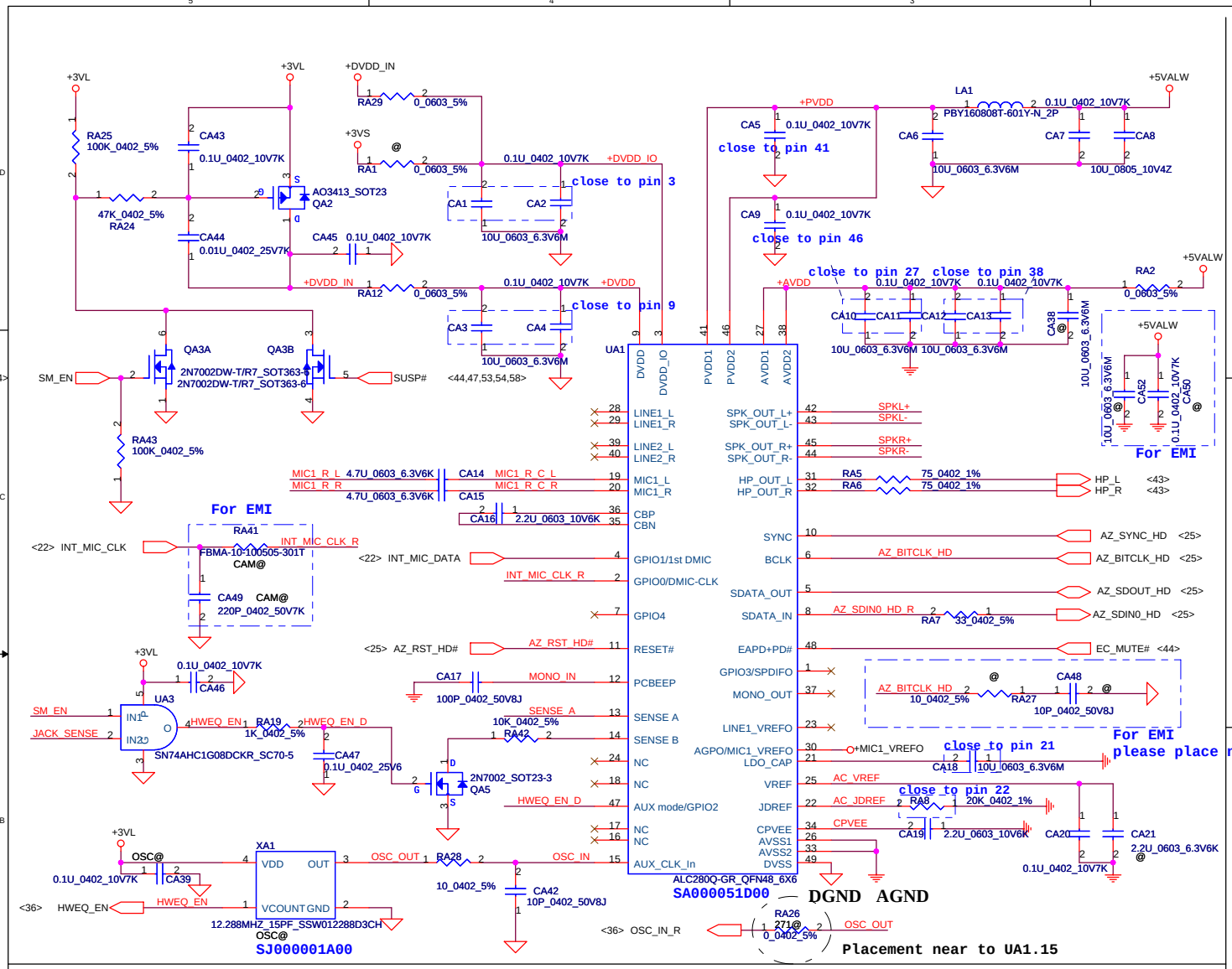

2W 4ohm =40mil
1W 8ohm =20mil
placement near Audio Codec

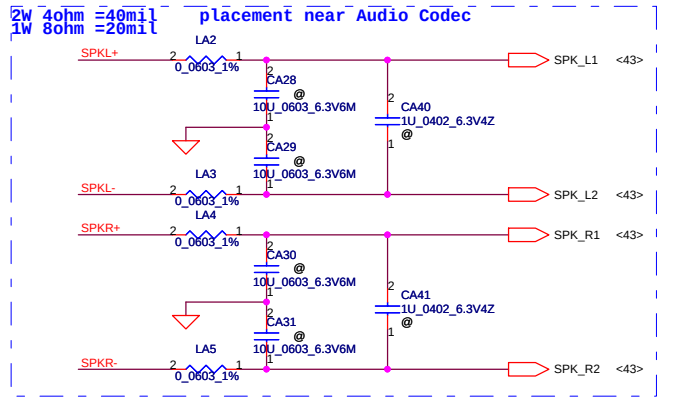

PCI Beep

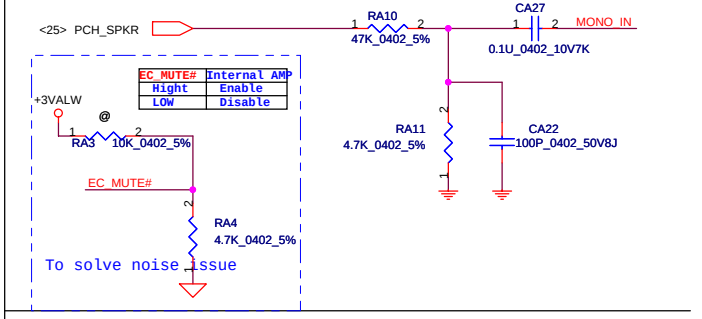

EC_MUTE#	Internal AMP
Hight	Enable
LOW	Disable

Beep sound

Ext.MIC/LINE IN JACK

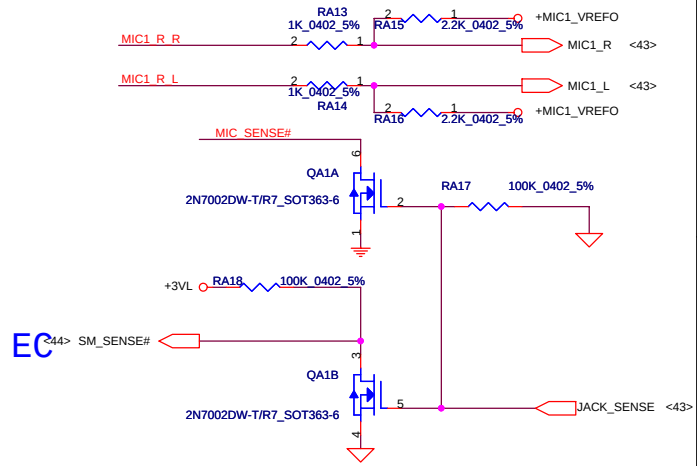

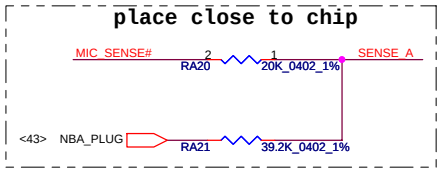

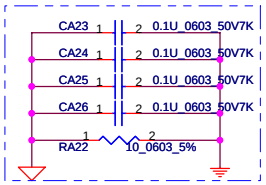

Sense Pin	Impedance	Codec Signals	Function
SENSE A	39.2K	PORT-A (PIN 31, 32)	Headphone out
	20K	PORT-B (PIN 19, 20)	Ext. MIC
	10K	PORT-C (PIN 28, 29)	
	5.1K	PORT-E	
SENSE B	39.2K		
	20K		
	10K		

Security Classification	Compal Secret Data		
Issued Date	2011/12/14	Deciphered Date	2012/12/31

THIS SHEET OF ENGINEERING DRAWING IS THE PROPRIETARY PROPERTY OF COMPAL ELECTRONICS, INC. AND CONTAINS CONFIDENTIAL AND TRADE SECRET INFORMATION. THIS SHEET MAY NOT BE TRANSFERED FROM THE CUSTODY OF THE COMPETENT DIVISION OF R&D DEPARTMENT EXCEPT AS AUTHORIZED BY COMPAL ELECTRONICS, INC. NEITHER THIS SHEET NOR THE INFORMATION IT CONTAINS MAY BE USED BY OR DISCLOSED TO ANY THIRD PARTY WITHOUT PRIOR WRITTEN CONSENT OF COMPAL ELECTRONICS, INC.

Compal Electronics, Inc.

Title: SCHEMATICS, MB A8391

Size | Document Number: 4019HG | Rev: B

Date: Thursday, February 16, 2012 | Sheet 42 of 61

HeadPhone/LINE OUT JACK

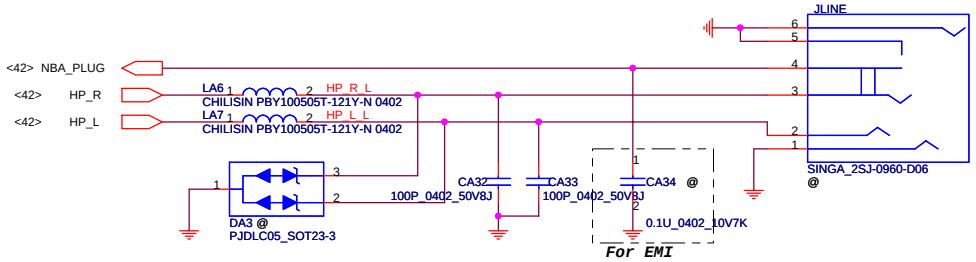

EXT.MIC/LINE IN JACK

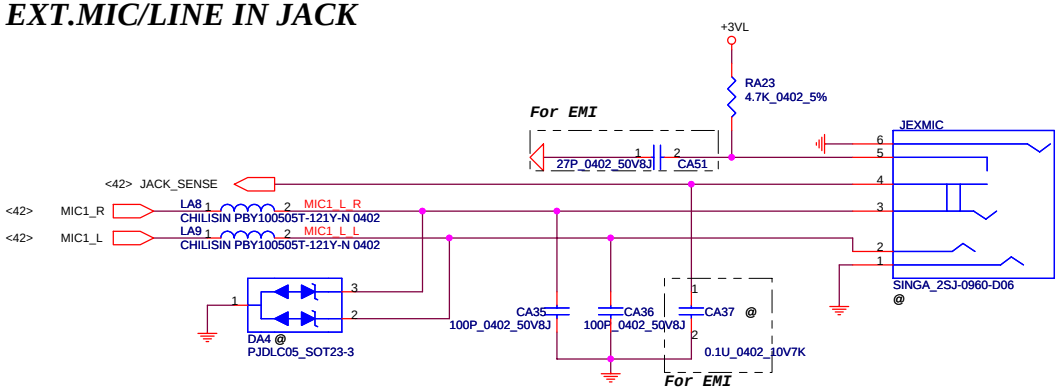

SPK CONN.

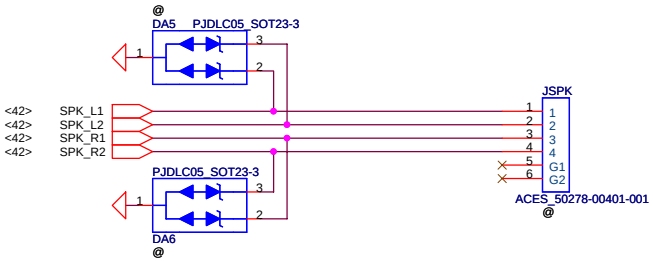

Security Classification	Compal Secret Data		
Issued Date	2011/12/14	Deciphered Date	2012/12/31

THIS SHEET OF ENGINEERING DRAWING IS THE PROPRIETARY PROPERTY OF COMPAL ELECTRONICS, INC. AND CONTAINS CONFIDENTIAL AND TRADE SECRET INFORMATION. THIS SHEET MAY NOT BE TRANSFERED FROM THE CUSTODY OF THE COMPETENT DIVISION OF R&D DEPARTMENT EXCEPT AS AUTHORIZED BY COMPAL ELECTRONICS, INC. NEITHER THIS SHEET NOR THE INFORMATION IT CONTAINS MAY BE USED BY OR DISCLOSED TO ANY THIRD PARTY WITHOUT PRIOR WRITTEN CONSENT OF COMPAL ELECTRONICS, INC.

Compal Electronics, Inc.

Title: SCHEMATICS, MB A8391

Size | Document Number: 4019HG | Rev: B

Date: Thursday, February 16, 2012 | Sheet 43 of 61

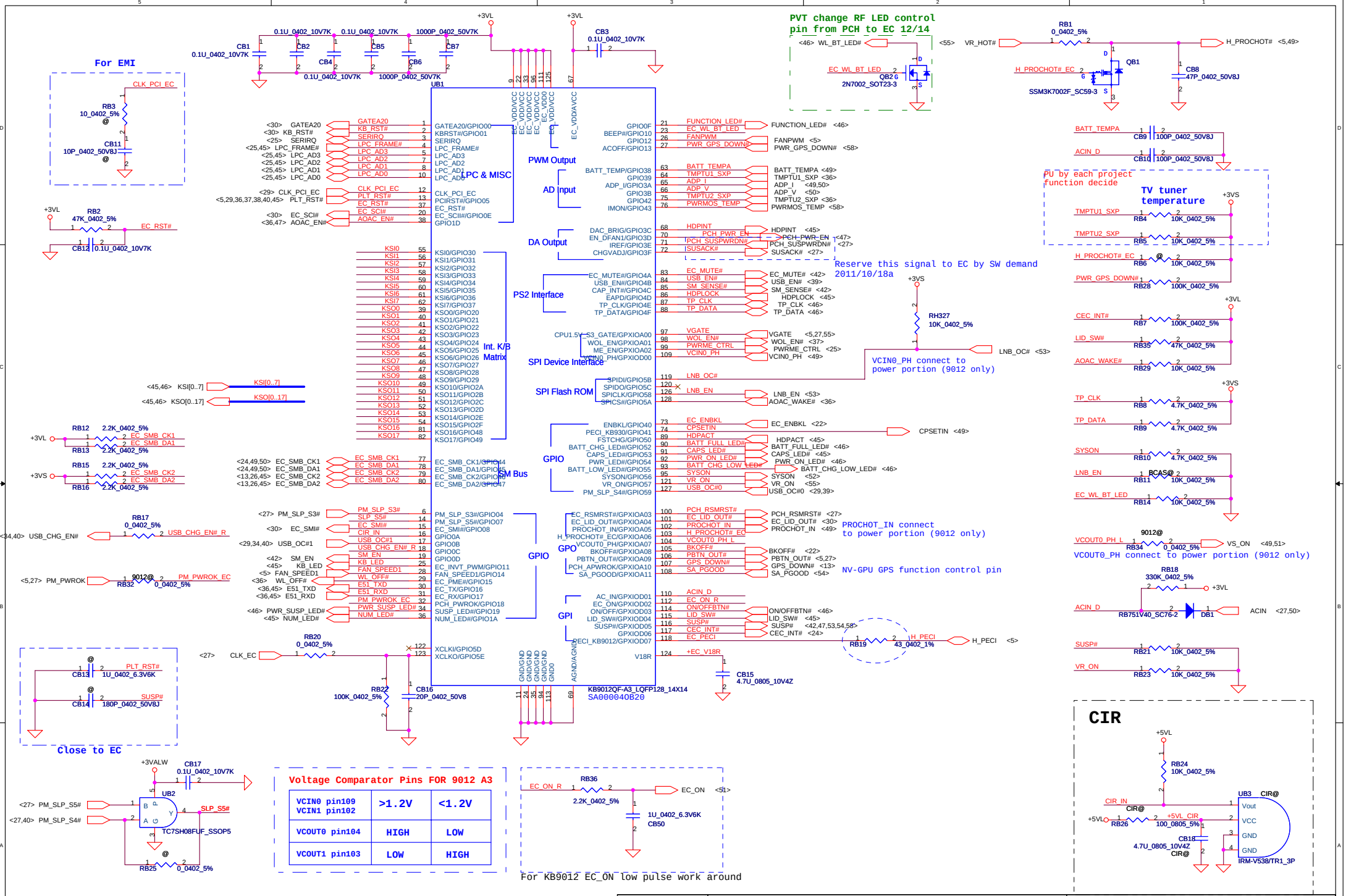
For EMI
PVT change RF LED control pin from PCH to EC 12/14
UB1
KB9012QF-A3_LQFP128_14X14
SA000040B20
LPC & MISC
PWM Output
AD Input
DA Output
PS2 Interface
Int. K/B Matrix
SPI Device Interface
SPI Flash ROM
SM Bus
GPIO
GPO
GPI
Reserve this signal to EC by SW demand 2011/10/18a
VCIN0_PH connect to power portion (9012 only)
PROCHOT_IN connect to power portion (9012 only)
NV-GPU GPS function control pin
VCOUT0_PH connect to power portion (9012 only)
TV tuner temperature
PU by each project function decide
Close to EC
CIR
Voltage Comparator Pins FOR 9012 A3
VCIN0 pin109 VCIN1 pin102 >1.2V <1.2V
VCOUT0 pin104 HIGH LOW
VCOUT1 pin103 LOW HIGH
For KB9012 EC_ON low pulse work around
Compal Secret Data
Compal Electronics, Inc.
SCHEMATICS, MB A8391
4019HG
Thursday, February 16, 2012
Sheet 44 of 61

SPI Flash (128KB)

Lid SW

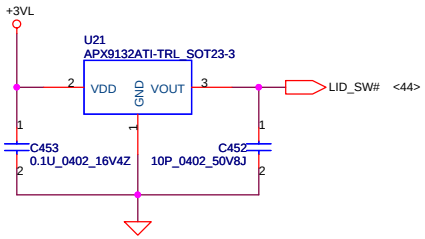

LPC Debug Port

Place the PAD under DDR DIMM.

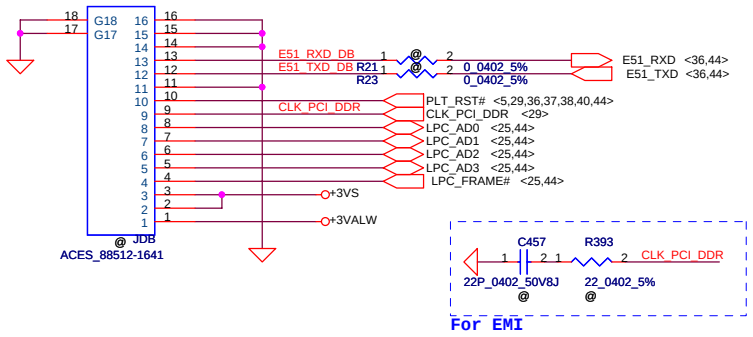

Keyboard LED

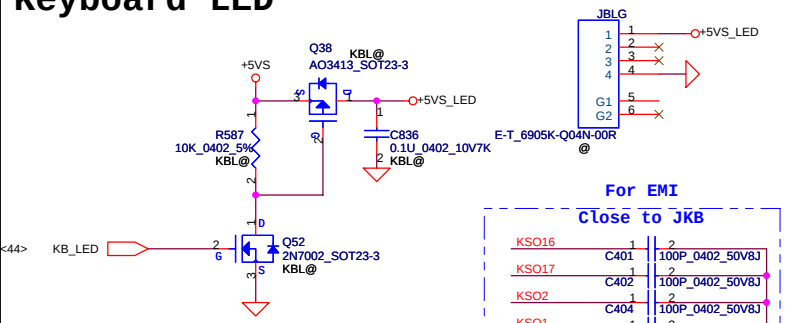

KEYBOARD CONN.

G-Sensor

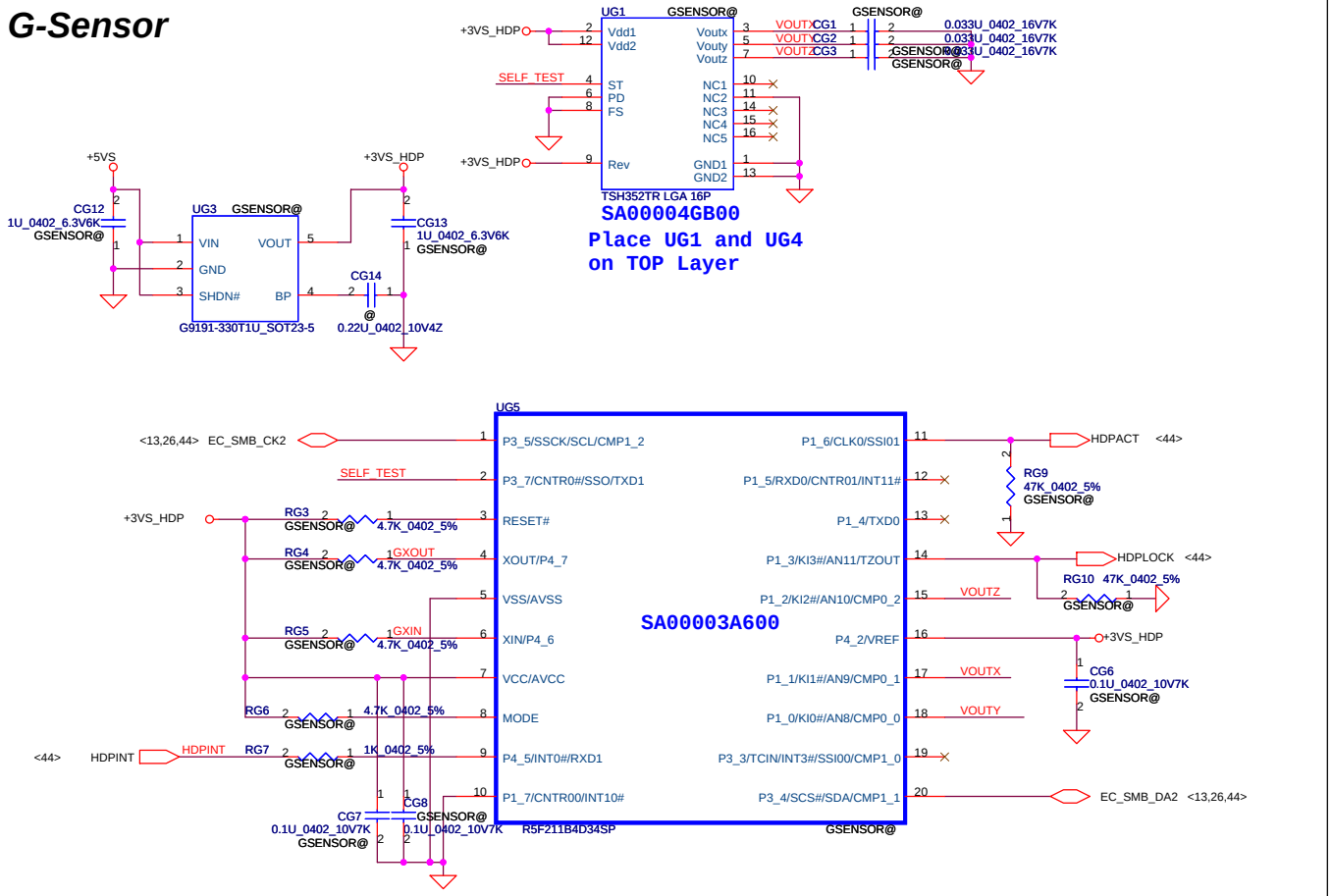

Security Classification	Compal Secret Data		
Issued Date	2011/12/14	Deciphered Date	2012/12/31

THIS SHEET OF ENGINEERING DRAWING IS THE PROPRIETARY PROPERTY OF COMPAL ELECTRONICS, INC. AND CONTAINS CONFIDENTIAL AND TRADE SECRET INFORMATION. THIS SHEET MAY NOT BE TRANSFERED FROM THE CUSTODY OF THE COMPETENT DIVISION OF R&D DEPARTMENT EXCEPT AS AUTHORIZED BY COMPAL ELECTRONICS, INC. NEITHER THIS SHEET NOR THE INFORMATION IT CONTAINS MAY BE USED BY OR DISCLOSED TO ANY THIRD PARTY WITHOUT PRIOR WRITTEN CONSENT OF COMPAL ELECTRONICS, INC.

Compal Electronics, Inc.

Title: SCHEMATICS, MB A8391

Size | Document Number: 4019HG | Rev: B

Date: Thursday, February 16, 2012 | Sheet 45 of 61

Power Button

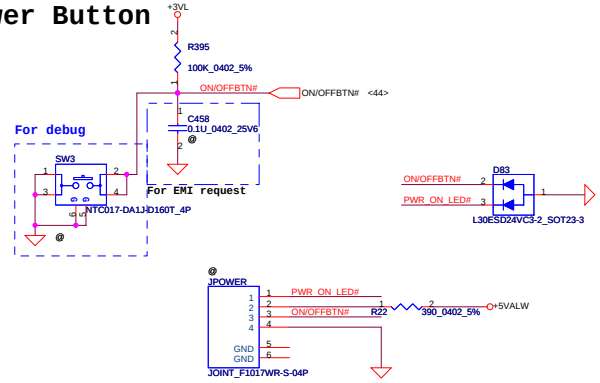

Touchpad Connector

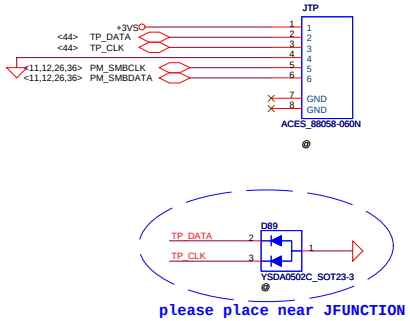

BATT CHARGE /FULL LED & AC IN

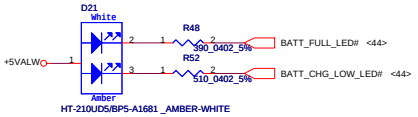

White LED bright when AC-adaptor is plugged and a Battery is full charged

Amber LED bright when charging battery from AC-adaptor

Amber LED blink during Critical Low battery

POWER LED

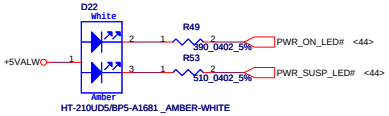

WiMAX LED

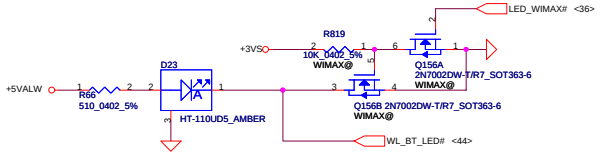

ESD solution

EMI solution

Screw Hole

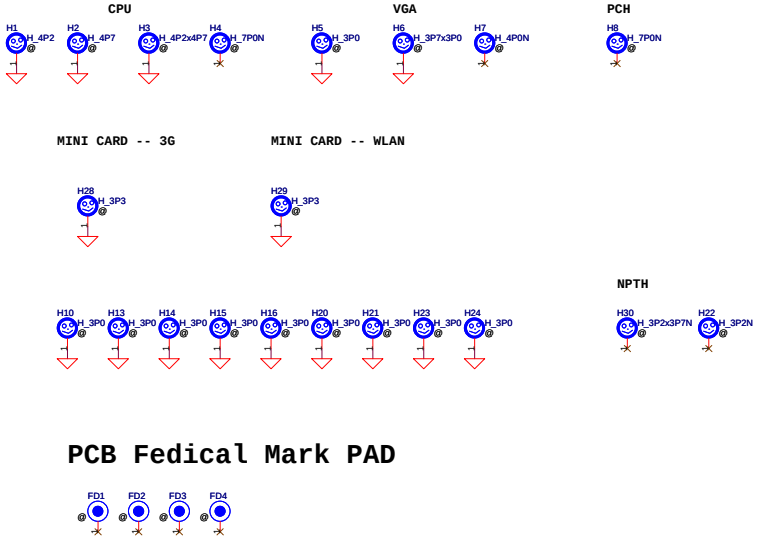

PCB Fedical Mark PAD

ISPD

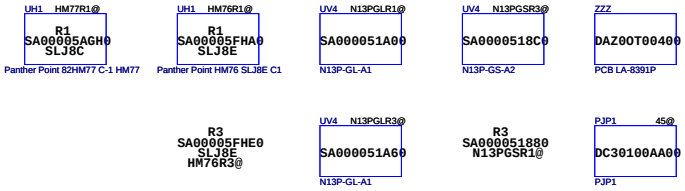

FUNCTION/B Connector

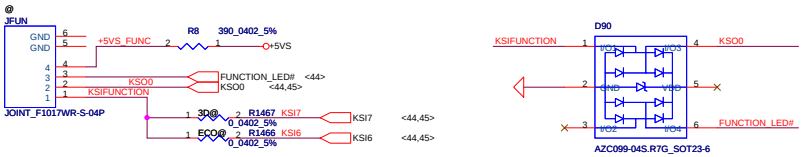

Green LED SC500009S00 VF=2.8V~3.15V, Isink<15mA

White LED SC500004W00 VF=2.75V~3.15V, Isink<15mA

please place near JFUNCTION

Security Classification	Compal Secret Data			Compal Electronics, Inc.
Issued Date	2011/12/14	Deciphered Date	2012/12/31	Title: SCHEMATICS, MB A8391
				Size / Document Number: 4019HG / Rev: B
				Date: Thursday, February 16, 2012 / Sheet 46 of 61

THIS SHEET OF ENGINEERING DRAWING IS THE PROPRIETARY PROPERTY OF COMPAL ELECTRONICS, INC. AND CONTAINS CONFIDENTIAL AND TRADE SECRET INFORMATION. THIS SHEET MAY NOT BE TRANSFERED FROM THE CUSTODY OF THE COMPETENT DIVISION OF R&D DEPARTMENT EXCEPT AS AUTHORIZED BY COMPAL ELECTRONICS, INC. NEITHER THIS SHEET NOR THE INFORMATION IT CONTAINS MAY BE USED BY OR DISCLOSED TO ANY THIRD PARTY WITHOUT PRIOR WRITTEN CONSENT OF COMPAL ELECTRONICS, INC.

+3VALW TO +3VS

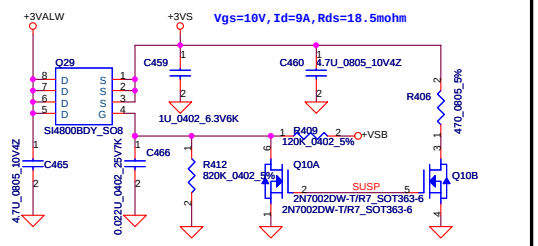

+5VALW TO +5VS

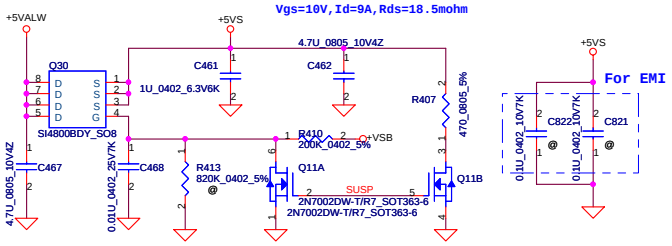

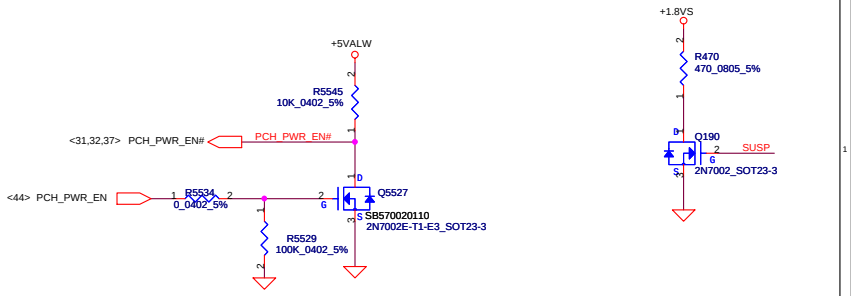

+1.5V to +VRAM_1.5VS

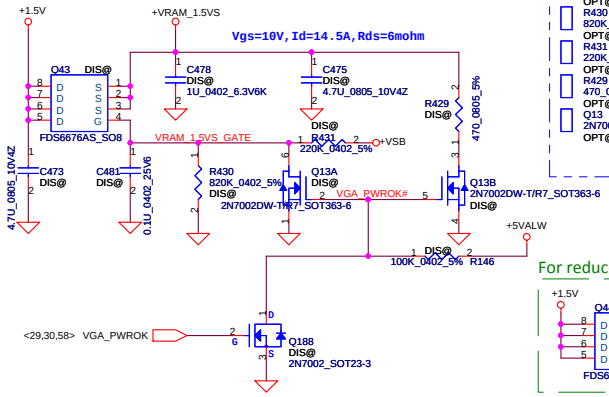

Q43 FDS6676AS_SO8 OPT@
C481 0.1U_0402_25V6 OPT@
R430 820K_0402_5% OPT@
R431 220K_0402_5% OPT@
R429 470_0805_5% OPT@
Q13 2N7002DW-T/R7_SOT363-6 OPT@
C473 4.7U_0805_10V4Z OPT@
C478 1U_0402_6.3V6K OPT@
C475 4.7U_0805_10V4Z OPT@
R146 100K_0402_5% OPT@
Q188 2N7002_SOT23-3 OPT@
Q44 FDS6676AS_SO8 OPT@

For reduce Rds-on 12/05 PVT

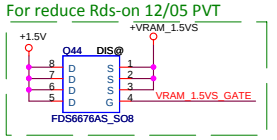

For S3 CPU Power Saving

+1.05VS_VCCP to +1.05VS_DGPU

Short PJ33 for Discrete SKUs

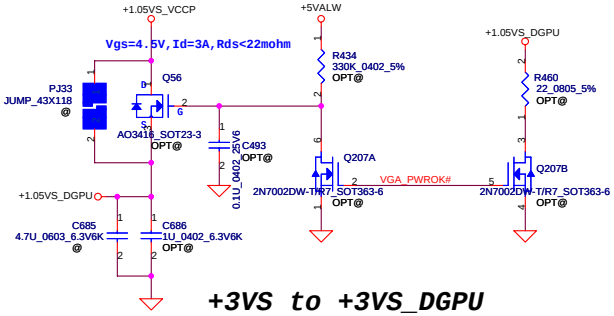

close to PU700

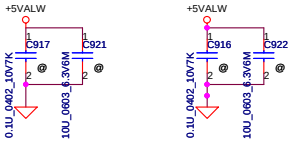

close to PL402

close to PL402

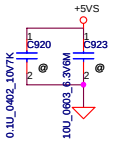

close to PU700

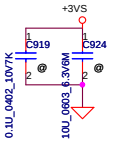

close to PU450

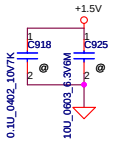

+5VS TO +5VS_ODD

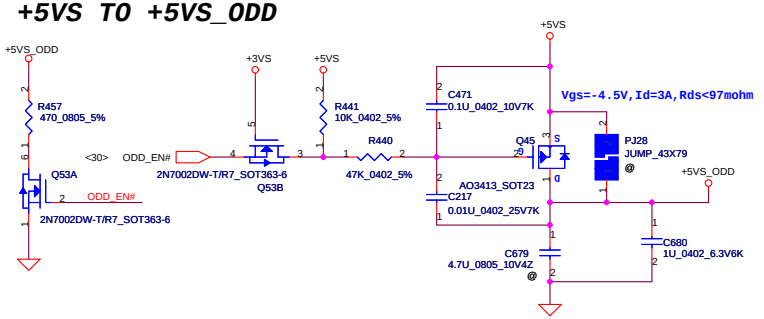

+3VS to +3VS_DGPU

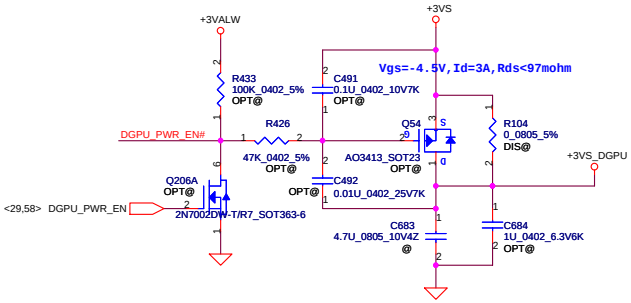

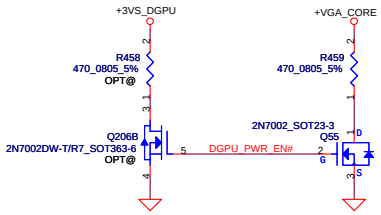

+3VALW TO +3V_WLAN for AOAC and WOWL

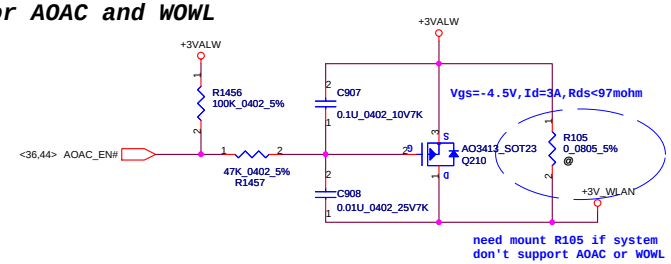

Security Classification	Compal Secret Data		
Issued Date	2011/12/14	Deciphered Date	2012/12/31

THIS SHEET OF ENGINEERING DRAWING IS THE PROPRIETARY PROPERTY OF COMPAL ELECTRONICS, INC. AND CONTAINS CONFIDENTIAL AND TRADE SECRET INFORMATION. THIS SHEET MAY NOT BE TRANSFERED FROM THE CUSTODY OF THE COMPETENT DIVISION OF R&D DEPARTMENT EXCEPT AS AUTHORIZED BY COMPAL ELECTRONICS, INC. NEITHER THIS SHEET NOR THE INFORMATION IT CONTAINS MAY BE USED BY OR DISCLOSED TO ANY THIRD PARTY WITHOUT PRIOR WRITTEN CONSENT OF COMPAL ELECTRONICS, INC.

Compal Electronics, Inc.

Title: SCHEMATICS, MB A8391

Size | Document Number: 4019HG | Rev: B

Date: Thursday, February 16, 2012 | Sheet 47 of 61

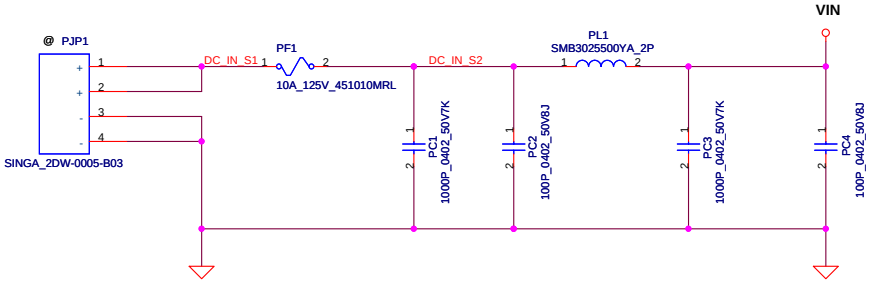

RTC Battery

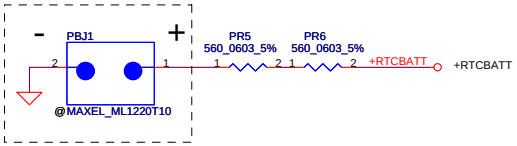

SP093MX0000

(100mA,40mils ,Via NO.= 2)

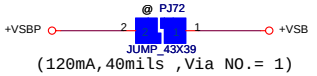

(120mA,40mils ,Via NO.= 1)

(1.54A,70mils ,Via NO.= 4)
OCP=4.2A

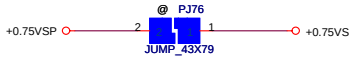

(0.5A,40mils ,Via NO.= 1)

(5A,200mils ,Via NO.= 10)
OCP=6.2A

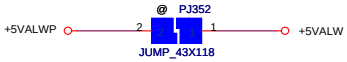

(8.13A,200mils ,Via NO.= 16)
OCP=8.7A

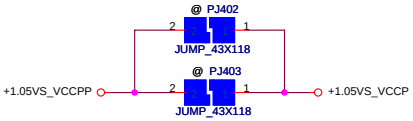

(17A,680mils ,Via NO.=34)
OCP=23.91A

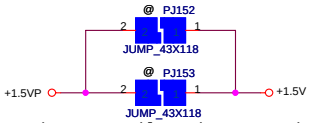

(15A, 600mils ,Via NO.= 30)
OCP=18A

ACIN

Precharge detector	Min.	typ.	Max
H-->L	14.42V	14.74V	15.23V
L-->H	15.39V	15.88V	16.39V

Security Classification	Compal Secret Data		
Issued Date	2011/12/14	Deciphered Date	2012/12/31

THIS SHEET OF ENGINEERING DRAWING IS THE PROPRIETARY PROPERTY OF COMPAL ELECTRONICS, INC. AND CONTAINS CONFIDENTIAL AND TRADE SECRET INFORMATION. THIS SHEET MAY NOT BE TRANSFERED FROM THE CUSTODY OF THE COMPETENT DIVISION OF R&D DEPARTMENT EXCEPT AS AUTHORIZED BY COMPAL ELECTRONICS, INC. NEITHER THIS SHEET NOR THE INFORMATION IT CONTAINS MAY BE USED BY OR DISCLOSED TO ANY THIRD PARTY WITHOUT PRIOR WRITTEN CONSENT OF COMPAL ELECTRONICS, INC.

Compal Electronics, Inc.

Title: ***SCHEMATICS, MB A8391***

Size: | Document Number: **4019HG** | Rev: B

Date: Thursday, February 16, 2012 | Sheet 48 of 61

PH1 under CPU botten side :
CPU thermal protection at 90 degree C
Recovery at 56 degree C

Rset = 3 * Rtmh
Rhyst = (Rset* Rtml) / (3*Rtml - Rset)

Rtmh at 90C = 7.87K, Rtml at 56C = 26.1K
Rset = 3 * 7.87K = 23.61K ==> 23.7K
Rhyst = (23.7K * 26.1K) / (3 * 26.1K - 23.7K) = 11.33K ==> 11.3K

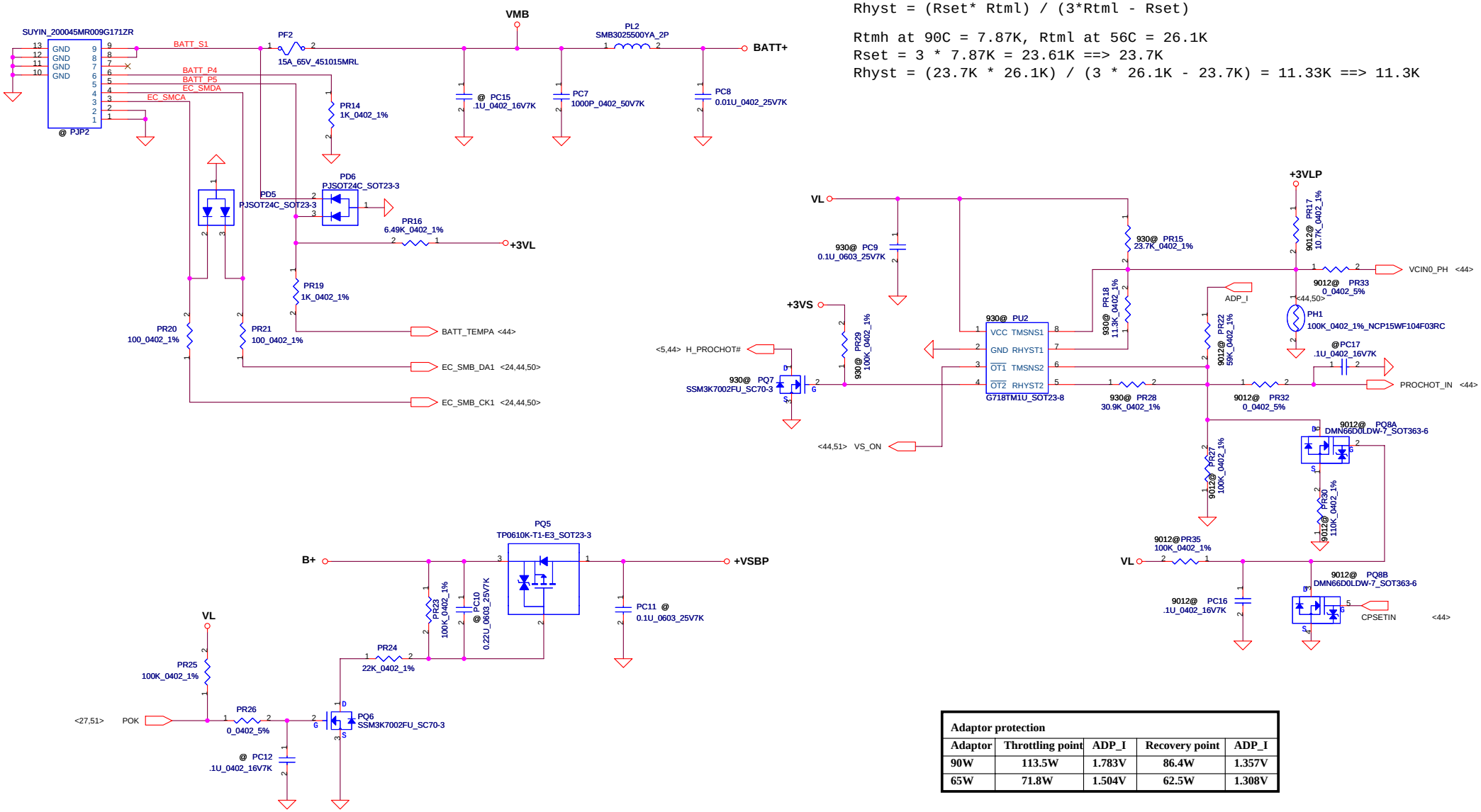

Adaptor protection

Adaptor	Throttling point	ADP_I	Recovery point	ADP_I
90W	113.5W	1.783V	86.4W	1.357V
65W	71.8W	1.504V	62.5W	1.308V

Security Classification	Compal Secret Data		
Issued Date	2011/12/14	Deciphered Date	2012/12/31

THIS SHEET OF ENGINEERING DRAWING IS THE PROPRIETARY PROPERTY OF COMPAL ELECTRONICS, INC. AND CONTAINS CONFIDENTIAL AND TRADE SECRET INFORMATION. THIS SHEET MAY NOT BE TRANSFERED FROM THE CUSTODY OF THE COMPETENT DIVISION OF R&D DEPARTMENT EXCEPT AS AUTHORIZED BY COMPAL ELECTRONICS, INC. NEITHER THIS SHEET NOR THE INFORMATION IT CONTAINS MAY BE USED BY OR DISCLOSED TO ANY THIRD PARTY WITHOUT PRIOR WRITTEN CONSENT OF COMPAL ELECTRONICS, INC.

Compal Electronics, Inc.

Title: **SCHEMATICS, MB A8391**

Size | Document Number: **4019HG** | Rev: B

Date: Thursday, February 16, 2012 | Sheet 49 of 61

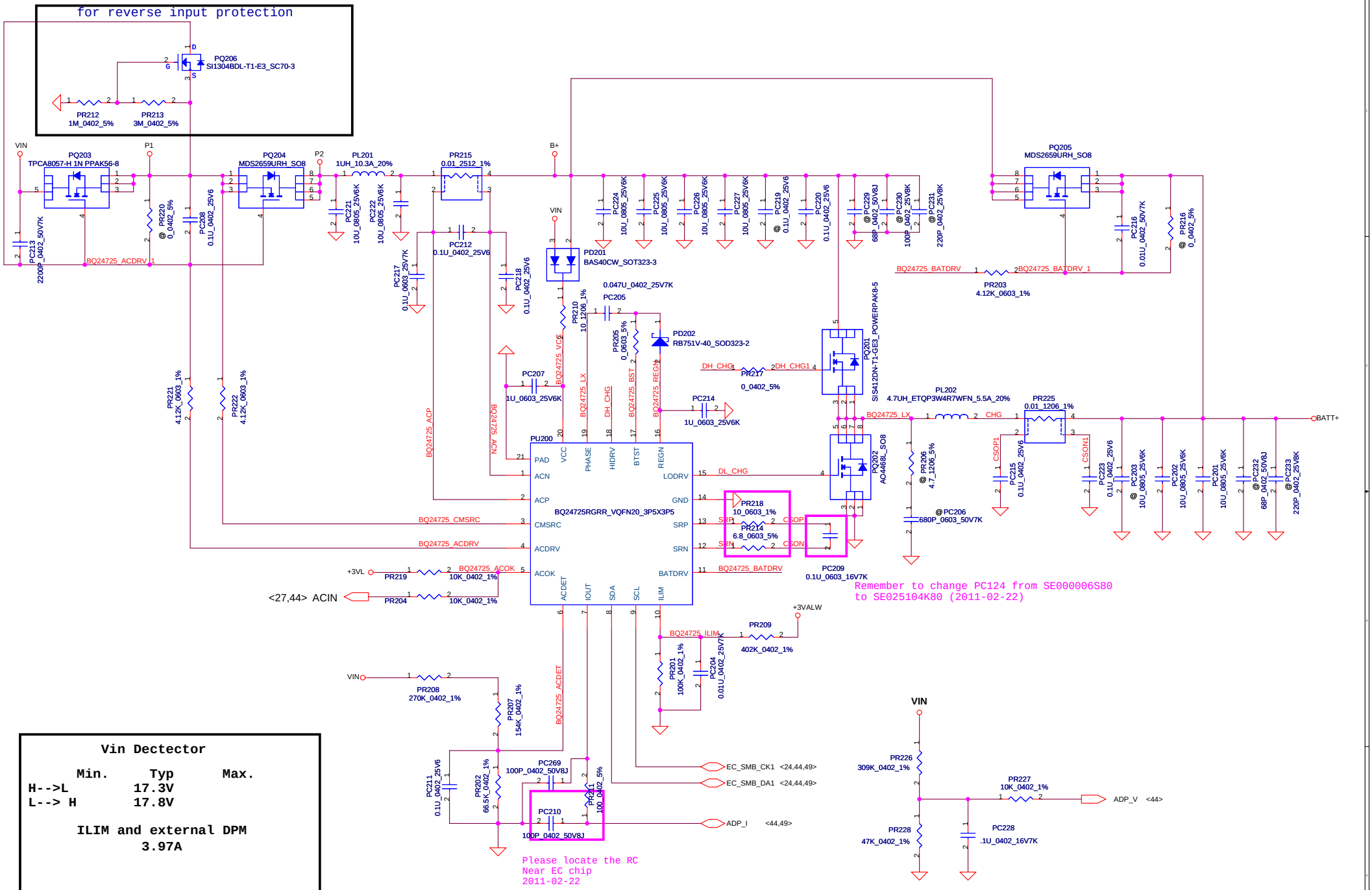

Vin Dectector

	Min.	Typ	Max.
H-->L		17.3V	
L--> H		17.8V	

ILIM and external DPM
3.97A

Security Classification	Compal Secret Data		
Issued Date	2011/12/14	Deciphered Date	2012/12/31

THIS SHEET OF ENGINEERING DRAWING IS THE PROPRIETARY PROPERTY OF COMPAL ELECTRONICS, INC. AND CONTAINS CONFIDENTIAL AND TRADE SECRET INFORMATION. THIS SHEET MAY NOT BE TRANSFERED FROM THE CUSTODY OF THE COMPETENT DIVISION OF R&D DEPARTMENT EXCEPT AS AUTHORIZED BY COMPAL ELECTRONICS, INC. NEITHER THIS SHEET NOR THE INFORMATION IT CONTAINS MAY BE USED BY OR DISCLOSED TO ANY THIRD PARTY WITHOUT PRIOR WRITTEN CONSENT OF COMPAL ELECTRONICS, INC.

Compal Electronics, Inc.

Title: **SCHEMATICS, MB A8391**

Size | Document Number: **4019HG** | Rev: B

Date: Thursday, February 16, 2012 | Sheet 50 of 61

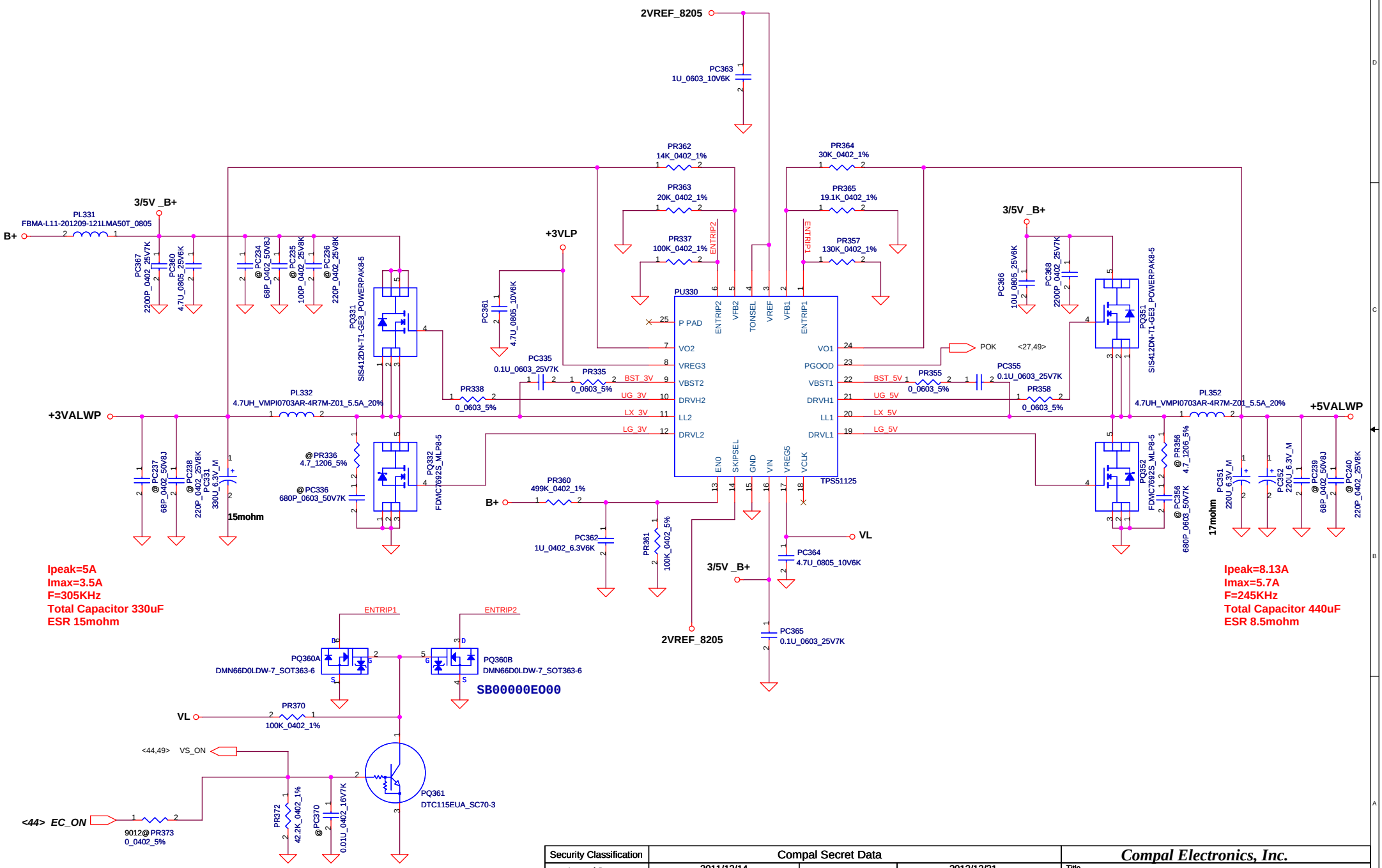

Security Classification	Compal Secret Data		
Issued Date	2011/12/14	Deciphered Date	2012/12/31

THIS SHEET OF ENGINEERING DRAWING IS THE PROPRIETARY PROPERTY OF COMPAL ELECTRONICS, INC. AND CONTAINS CONFIDENTIAL AND TRADE SECRET INFORMATION. THIS SHEET MAY NOT BE TRANSFERED FROM THE CUSTODY OF THE COMPETENT DIVISION OF R&D DEPARTMENT EXCEPT AS AUTHORIZED BY COMPAL ELECTRONICS, INC. NEITHER THIS SHEET NOR THE INFORMATION IT CONTAINS MAY BE USED BY OR DISCLOSED TO ANY THIRD PARTY WITHOUT PRIOR WRITTEN CONSENT OF COMPAL ELECTRONICS, INC.

Compal Electronics, Inc.

Title: **SCHEMATICS, MB A8391**

Size | Document Number: **4019HG** | Rev: B

Date: Thursday, February 16, 2012 | Sheet 51 of 61

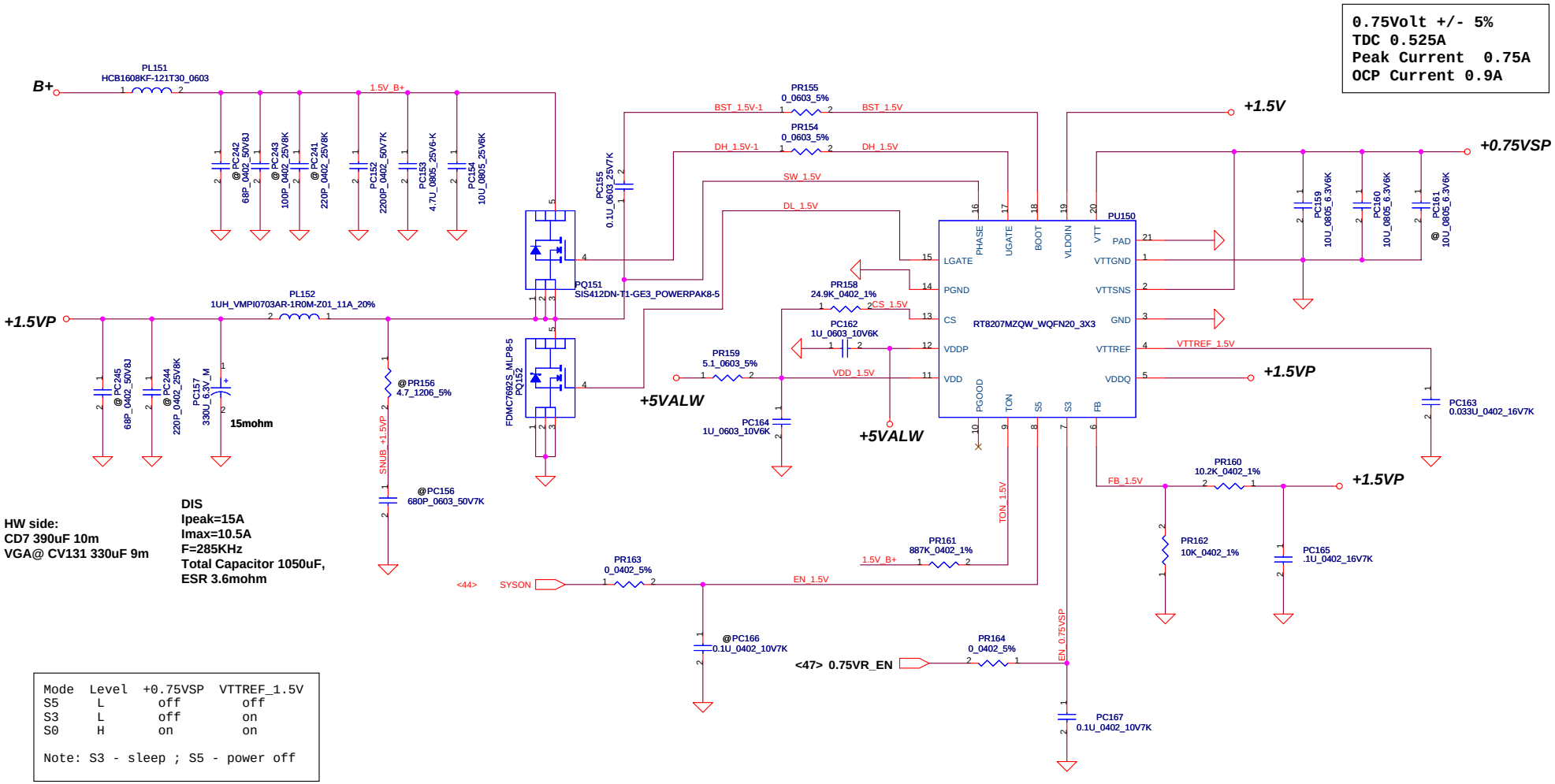

Mode	Level	+0.75VSP	VTTREF_1.5V
S5	L	off	off
S3	L	off	on
S0	H	on	on

Note: S3 - sleep ; S5 - power off

Security Classification	Compal Secret Data		
Issued Date	2011/12/14	Deciphered Date	2012/12/31

THIS SHEET OF ENGINEERING DRAWING IS THE PROPRIETARY PROPERTY OF COMPAL ELECTRONICS, INC. AND CONTAINS CONFIDENTIAL AND TRADE SECRET INFORMATION. THIS SHEET MAY NOT BE TRANSFERED FROM THE CUSTODY OF THE COMPETENT DIVISION OF R&D DEPARTMENT EXCEPT AS AUTHORIZED BY COMPAL ELECTRONICS, INC. NEITHER THIS SHEET NOR THE INFORMATION IT CONTAINS MAY BE USED BY OR DISCLOSED TO ANY THIRD PARTY WITHOUT PRIOR WRITTEN CONSENT OF COMPAL ELECTRONICS, INC.

Compal Electronics, Inc.

Title: SCHEMATICS, MB A8391

Size | Document Number: 4019HG | Rev B

Date: Thursday, February 16, 2012 | Sheet 52 of 61

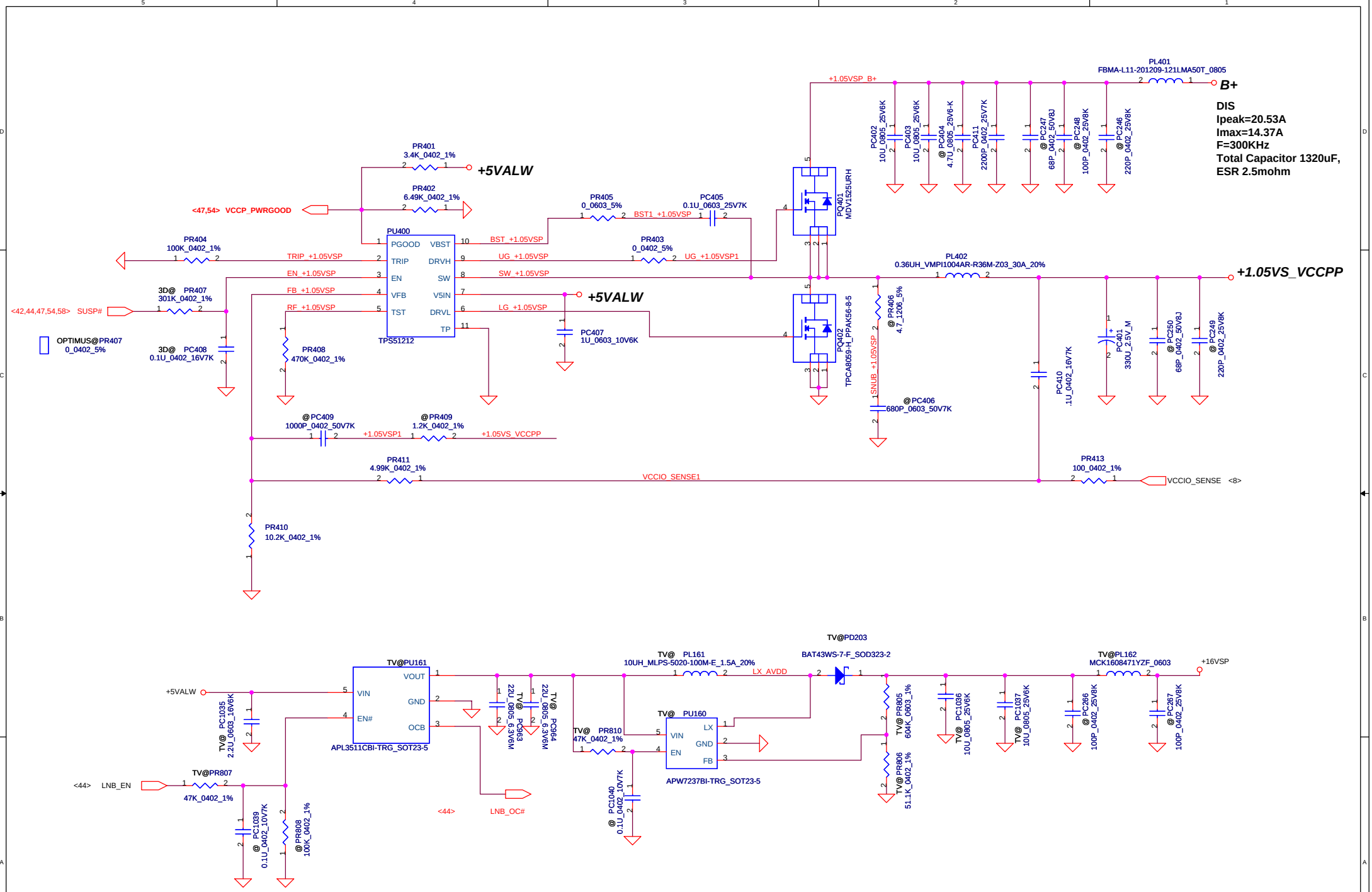

Security Classification	Compal Secret Data		
Issued Date	2011/12/14	Deciphered Date	2012/12/31

THIS SHEET OF ENGINEERING DRAWING IS THE PROPRIETARY PROPERTY OF COMPAL ELECTRONICS, INC. AND CONTAINS CONFIDENTIAL AND TRADE SECRET INFORMATION. THIS SHEET MAY NOT BE TRANSFERED FROM THE CUSTODY OF THE COMPETENT DIVISION OF R&D DEPARTMENT EXCEPT AS AUTHORIZED BY COMPAL ELECTRONICS, INC. NEITHER THIS SHEET NOR THE INFORMATION IT CONTAINS MAY BE USED BY OR DISCLOSED TO ANY THIRD PARTY WITHOUT PRIOR WRITTEN CONSENT OF COMPAL ELECTRONICS, INC.

Compal Electronics, Inc.

Title: **SCHEMATICS, MB A8391**

Size: Custom | Document Number: **4019HG** | Rev: B

Date: Thursday, February 16, 2012 | Sheet 53 of 61

The 1k PD on the VCCSA VIDs are empty.
These should be stuffed to ensure that
VCCSA VID is 00 prior to VCCIO stability.

VID [0]	VID[1]	VCCSA Vout
0	0	0.9V
0	1	0.8V
1	0	0.725V
1	1	0.675V

output voltage adjustable network

+VCC_SAP
TDC 4.2A
Peak Current 6A
OCP current 8A

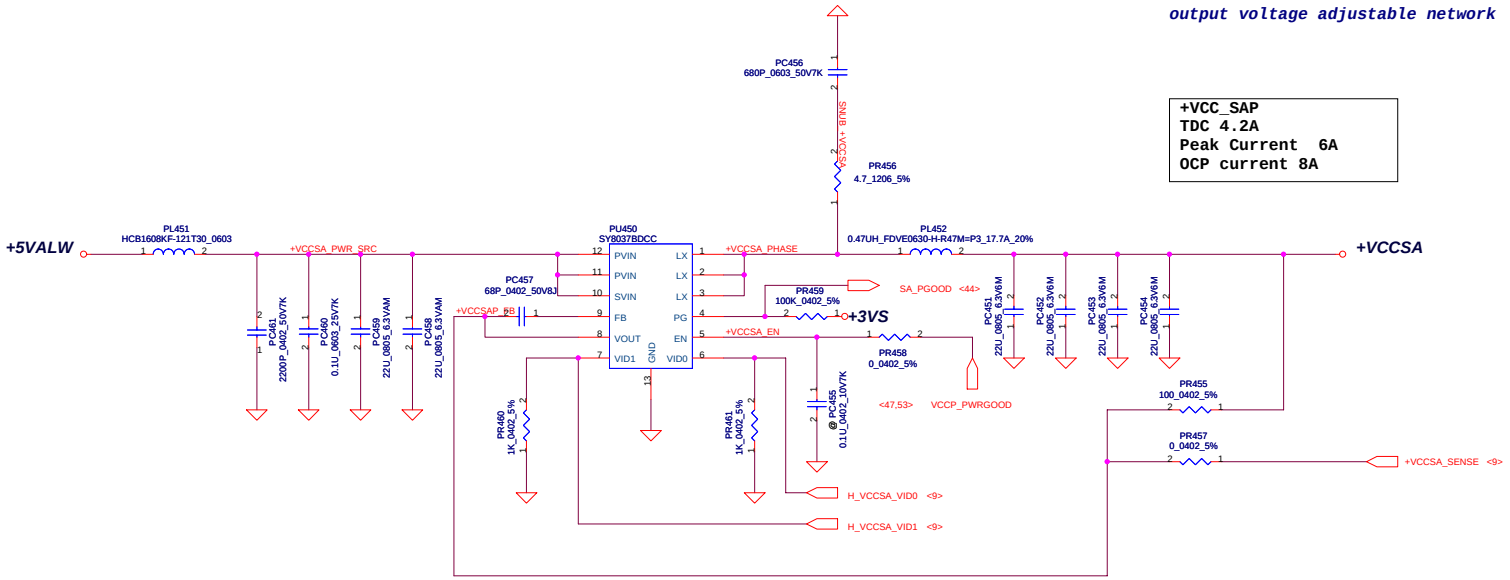

Ipeak=1.308A
ILIM = 4A
F=1MHz

Security Classification	Compal Secret Data		
Issued Date	2011/12/14	Deciphered Date	2012/12/31

THIS SHEET OF ENGINEERING DRAWING IS THE PROPRIETARY PROPERTY OF COMPAL ELECTRONICS, INC. AND CONTAINS CONFIDENTIAL AND TRADE SECRET INFORMATION. THIS SHEET MAY NOT BE TRANSFERED FROM THE CUSTODY OF THE COMPETENT DIVISION OF R&D DEPARTMENT EXCEPT AS AUTHORIZED BY COMPAL ELECTRONICS, INC. NEITHER THIS SHEET NOR THE INFORMATION IT CONTAINS MAY BE USED BY OR DISCLOSED TO ANY THIRD PARTY WITHOUT PRIOR WRITTEN CONSENT OF COMPAL ELECTRONICS, INC.

Compal Electronics, Inc.

Title: SCHEMATICS, MB A8391

Size: C | Document Number: 4019HG | Rev: B

Date: Thursday, February 16, 2012 | Sheet 54 of 61

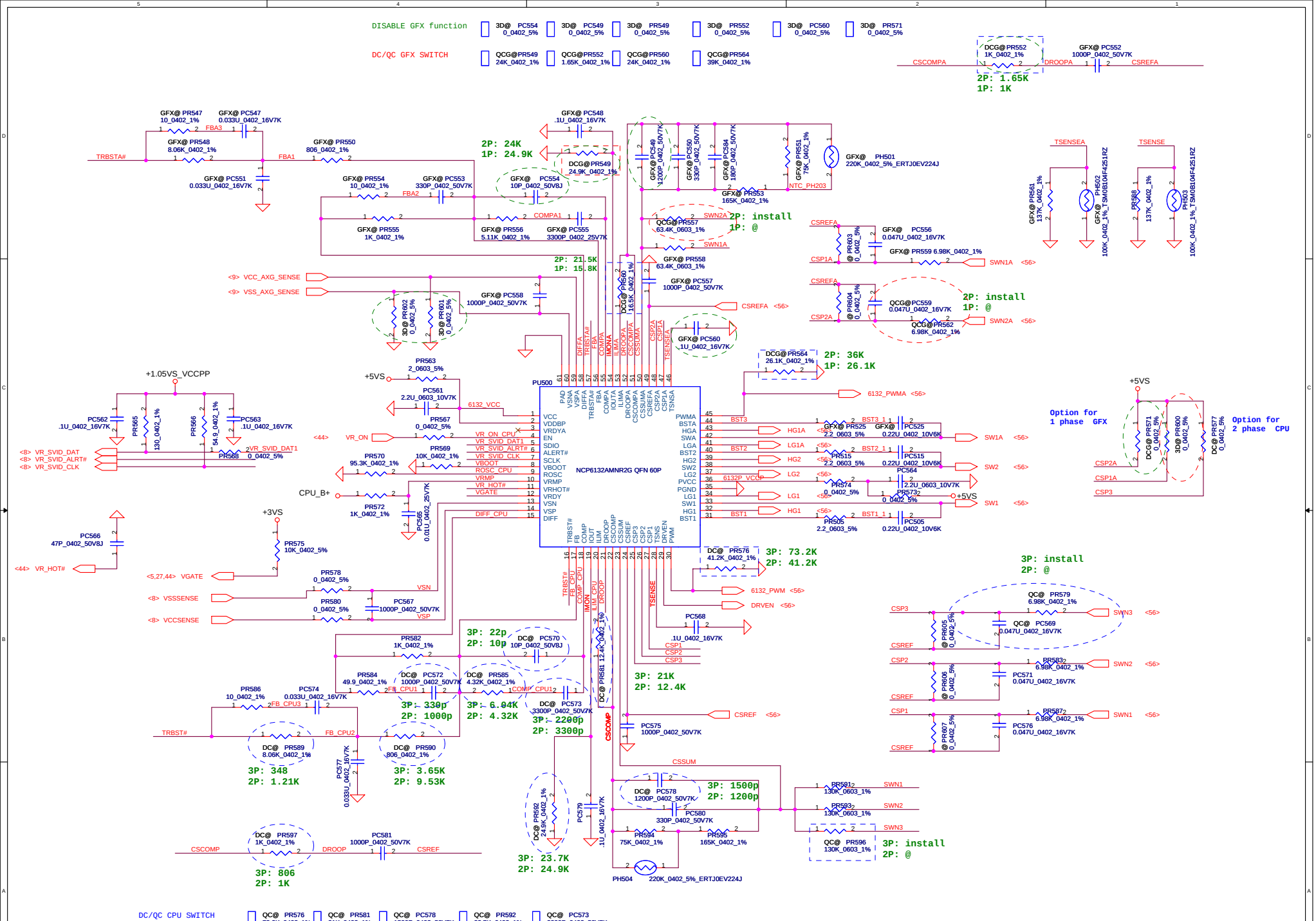

Security Classification	Compal Secret Data		
Issued Date	2011/12/14	Deciphered Date	2012/12/31

THIS SHEET OF ENGINEERING DRAWING IS THE PROPRIETARY PROPERTY OF COMPAL ELECTRONICS, INC. AND CONTAINS CONFIDENTIAL AND TRADE SECRET INFORMATION. THIS SHEET MAY NOT BE TRANSFERED FROM THE CUSTODY OF THE COMPETENT DIVISION OF RADIO DEPARTMENT EXCEPT AS AUTHORIZED BY COMPAL ELECTRONICS, INC. NEITHER THIS SHEET NOR THE INFORMATION IT CONTAINS MAY BE USED BY OR DISCLOSED TO ANY THIRD PARTY WITHOUT PRIOR WRITTEN CONSENT OF COMPAL ELECTRONICS, INC.

Compal Electronics, Inc.

Title: **SCHEMATICS, MB A8391**

Size: Custom | Document Number: 4019HG | Rev: B

Date: Thursday, February 16, 2012 | Sheet 55 of 61

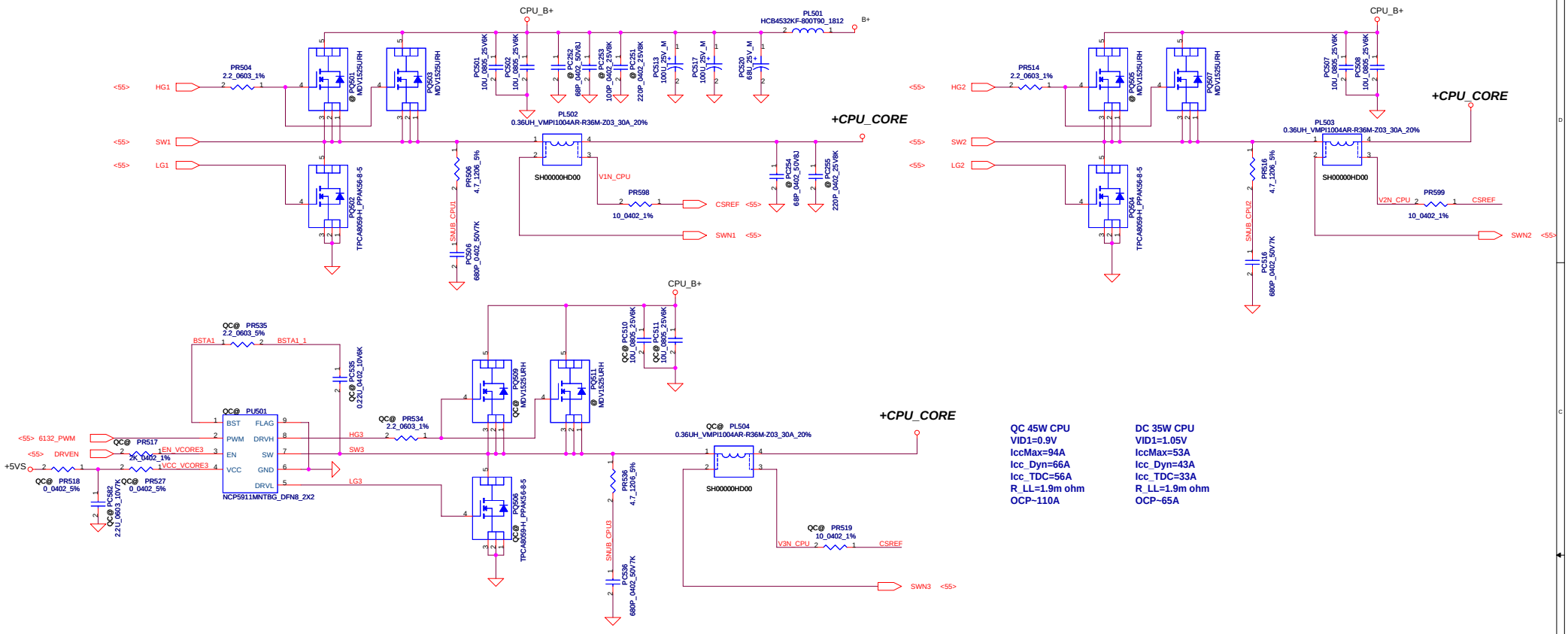

QC 45W CPU
VID1=0.9V
IccMax=94A
Icc_Dyn=66A
Icc_TDC=56A
R_LL=1.9m ohm
OCP~110A

DC 35W CPU
VID1=1.05V
IccMax=53A
Icc_Dyn=43A
Icc_TDC=33A
R_LL=1.9m ohm
OCP~65A

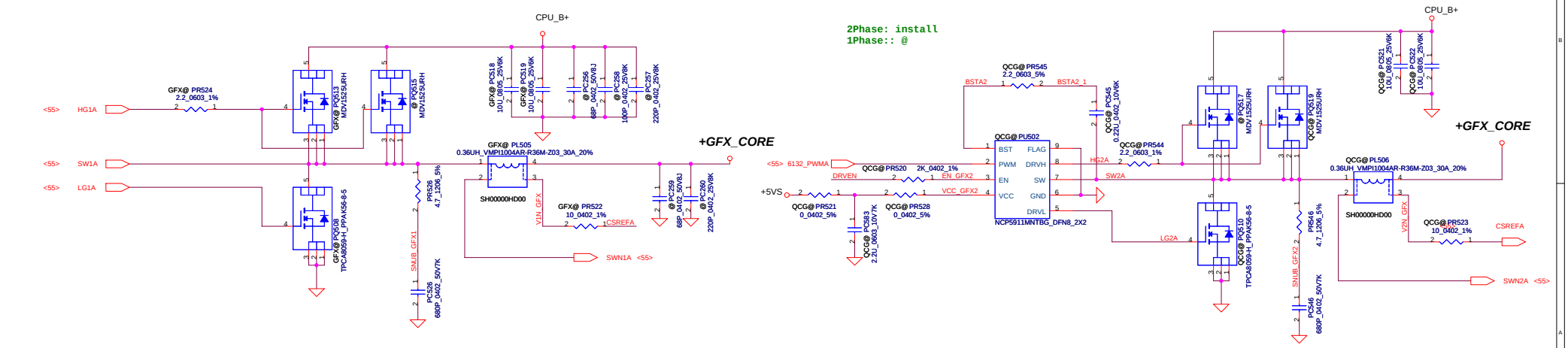

QC 45W GT2
VID1=1.23V
IccMax=46A
Icc_Dyn=37A
Icc_TDC=38A
R_LL=3.9m ohm
OCP~55A

DC 35W GT2
VID1=1.23V
IccMax=33A
Icc_Dyn=20.2A
Icc_TDC=21.5A
R_LL=3.9m ohm
OCP~40A

Security Classification	Compal Secret Data		
Issued Date	2011/12/14	Deciphered Date	2012/12/31

THIS SHEET OF ENGINEERING DRAWING IS THE PROPRIETARY PROPERTY OF COMPAL ELECTRONICS, INC. AND CONTAINS CONFIDENTIAL AND TRADE SECRET INFORMATION. THIS SHEET MAY NOT BE TRANSFERED FROM THE CUSTODY OF THE COMPETENT DIVISION OF R&D DEPARTMENT EXCEPT AS AUTHORIZED BY COMPAL ELECTRONICS, INC. NEITHER THIS SHEET NOR THE INFORMATION IT CONTAINS MAY BE USED BY OR DISCLOSED TO ANY THIRD PARTY WITHOUT PRIOR WRITTEN CONSENT OF COMPAL ELECTRONICS, INC.

Compal Electronics, Inc.

Title: SCHEMATICS, MB A8391

Size: C | Document Number: 4019HG | Rev: B

Date: Thursday, February 16, 2012 | Sheet 56 of 61

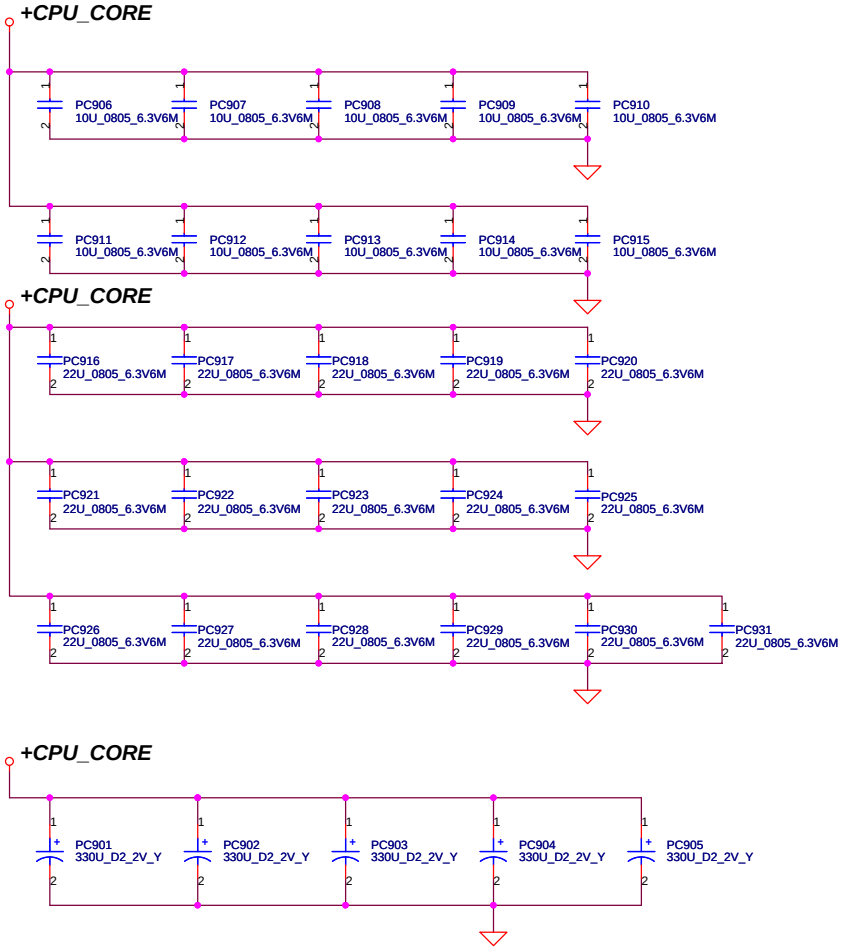

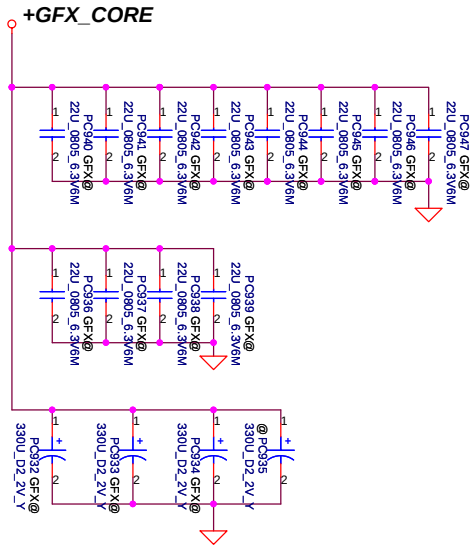

Below is 458544_CRV_PDDG_0.5 Table 5-8.

Socket Bottom	5 x 22 µF (0805) 5 x (0805) no-stuff sites
Socket Top	7 x 22 µF (0805) 2 x (0805) no-stuff sites

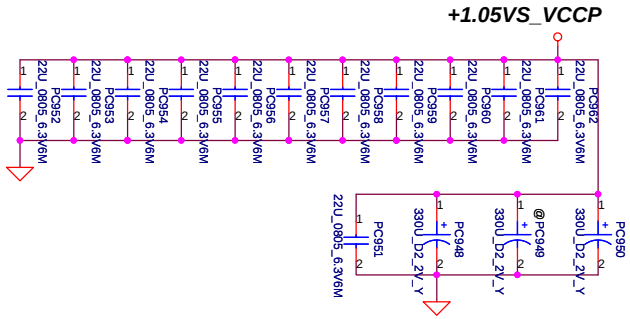

Chief River	330uF*9m	470uF*4.5m	22uF	10uF
8layer for DC CPU	4		16	10
8layer for QC CPU	5		16	10
6layer for DC CPU	5		16	10
6layer for QC CPU	4	1	16	10
GFX_CORE DC	2		12	
GFX_CORE QC	3		12	
1.05V_VCCP	2		12	

Security Classification	Compal Secret Data		
Issued Date	2011/12/14	Deciphered Date	2012/12/31

THIS SHEET OF ENGINEERING DRAWING IS THE PROPRIETARY PROPERTY OF COMPAL ELECTRONICS, INC. AND CONTAINS CONFIDENTIAL AND TRADE SECRET INFORMATION. THIS SHEET MAY NOT BE TRANSFERED FROM THE CUSTODY OF THE COMPETENT DIVISION OF R&D DEPARTMENT EXCEPT AS AUTHORIZED BY COMPAL ELECTRONICS, INC. NEITHER THIS SHEET NOR THE INFORMATION IT CONTAINS MAY BE USED BY OR DISCLOSED TO ANY THIRD PARTY WITHOUT PRIOR WRITTEN CONSENT OF COMPAL ELECTRONICS, INC.

Compal Electronics, Inc.

Title: **SCHEMATICS, MB A8391**

Size | Document Number: 4019HG | Rev: B

Date: Thursday, February 16, 2012 | Sheet 57 of 61

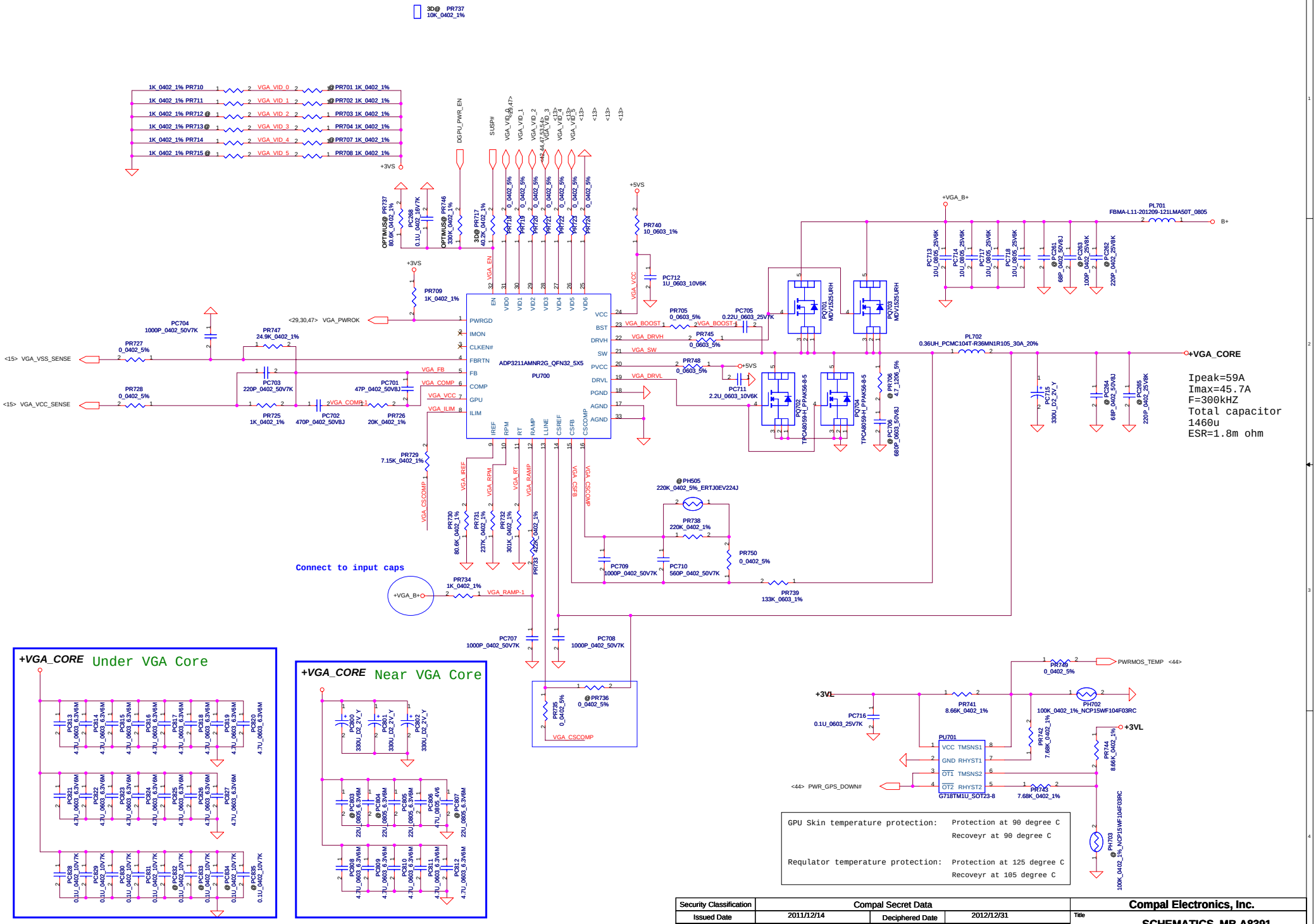

Security Classification	Compal Secret Data			Compal Electronics, Inc.
Issued Date	2011/12/14	Deciphered Date	2012/12/31	Title: SCHEMATICS, MB A8391
				Size: Document Number: 4019HG Rev: B
				Date: Thursday, February 16, 2012 Sheet 58 of 61

THIS SHEET OF ENGINEERING DRAWING IS THE PROPRIETARY PROPERTY OF COMPAL ELECTRONICS, INC. AND CONTAINS CONFIDENTIAL AND TRADE SECRET INFORMATION. THIS SHEET MAY NOT BE TRANSFERED FROM THE CUSTODY OF THE COMPETENT DIVISION OF R&D DEPARTMENT EXCEPT AS AUTHORIZED BY COMPAL ELECTRONICS, INC. NEITHER THIS SHEET NOR THE INFORMATION IT CONTAINS MAY BE USED BY OR DISCLOSED TO ANY THIRD PARTY WITHOUT PRIOR WRITTEN CONSENT OF COMPAL ELECTRONICS, INC.

NO	DATE	PAGE	MODIFICATION LIST	PURPOSE
1.	2011/09/29	P51-PWR_+3VALWP/+5VALWP	Change PU330 to RT8205L	Change source
2.	2011/09/29	P53-PWR_ +1.05VS_VCCP/+16VSP	Change PU400 to RT8237C	Change source
3.	2011/09/29	P54-PWR_+VCCSAP/1.8VSP	Change PU450 to SY8037B	Change source
4.	2011/09/29	P57-PWR +CPU_CORE DECOUPLING	Change HMOS to MDV1525	Change source
5.	2011/09/29	P53-PWR_ +1.05VS_VCCP/+16VSP	Change HMOS to MDV1525	Change source
6.	2011/09/29	P49-PWR_BATTERY CONN / OTP	Change PD5,PD6 to SCA00001G00	ESD team request
7.	2011/09/29	P57-PWR +CPU_CORE DECOUPLING	Change PR589 from 348 to 8.06k	FAE suggestion
8.	2011/09/29	P57-PWR +CPU_CORE DECOUPLING	Change PR590 from 3.65k to 806	FAE suggestion
10.	2011/09/29	P57-PWR +CPU_CORE DECOUPLING	Change PC574 from 680P to 0.033u	FAE suggestion
11.	2011/09/29	P57-PWR +CPU_CORE DECOUPLING	Change PC577 from 4700P to 0.033u	FAE suggestion
12.	2011/09/29	P57-PWR +CPU_CORE DECOUPLING	Change PR548 from 1.21k to 8.06k	FAE suggestion
13.	2011/09/29	P57-PWR +CPU_CORE DECOUPLING	Change PR550 from 10.7k to 806	FAE suggestion
14.	2011/09/29	P57-PWR +CPU_CORE DECOUPLING	Change PC547 from 680P to 0.033u	FAE suggestion
15.	2011/09/29	P57-PWR +CPU_CORE DECOUPLING	Change PC551 from 4700P to 0.033u	FAE suggestion
16.	2011/09/29	P57-PWR +CPU_CORE DECOUPLING	Add snubber and boost resistor	For 3x3 H-MOS solution
17.	2011/09/29	P49-PWR_BATTERY CONN / OTP	Add PR22 120k,PR27 100k, PR32 0 Ohm	For 120W adapter protect(9012)
18.	2011/09/29	P58-PWR_VGA_CORE	Remove PC803, PC804 add PC806 47u	For Nvidia suggestion
19.	2011/09/29	P51-PWR_+3VALWP/+5VALWP	Change PC360 to SE000006R80	Change source
20.	2011/09/29	P58-PWR_VGA_CORE	Change PC702 to SE00000H180	Change source
21.	2011/09/29	P49-PWR_BATTERY CONN / OTP	Add PR17 14k, PR33 0 Ohm	For CPU temperature protect(9012)
22.	2011/09/29	P51-PWR_+3VALWP/+5VALWP	Add PR373 0 Ohm	For 3/5 V always power on(9012)

THIS SHEET OF ENGINEERING DRAWING IS THE PROPRIETARY PROPERTY OF COMPAL ELECTRONICS, INC. AND CONTAINS CONFIDENTIAL AND TRADE SECRET INFORMATION. THIS SHEET MAY NOT BE TRANSFERED FROM THE CUSTODY OF THE COMPETENT DIVISION OF R&D DEPARTMENT EXCEPT AS AUTHORIZED BY COMPAL ELECTRONICS, INC. NEITHER THIS SHEET NOR THE INFORMATION IT CONTAINS MAY BE USED BY OR DISCLOSED TO ANY THIRD PARTY WITHOUT PRIOR WRITTEN CONSENT OF COMPAL ELECTRONICS, INC.

HW PIR (Product Improve Record)

QFKAA LA-8391P SCHEMATIC CHANGE LIST
REVISION CHANGE: 0.2
GERBER-OUT DATE: 2011/11/11

Item	Page	Date	Request	Solution
1)	44	2011/9/27	in order to add one AD channel for PWR VR	change PWR_GPS_DOWN# to EC GPIO43.
			protect of GPU GPS	change HDPACT to EC_GPIO50
2)	44	2011/9/27	in order to reduce BOM	change CB50 to SE000000K80
3)	15	2011/9/27	for N13PGL strap pin by NV review	modify VRAM Table
				change RV77 to @ due to it is for X76
				change RV98 to @ for N13PGL
				change RV76 to @ for N13PGL
				change RV73 to 45.3k (SD034453280) for N13PGL
				change RV89 to 34.8k (SD034348280) for N13PGL
4)	15	2011/9/28	for N13PGL strap pin by NV review	change RV89 to 30k (SD034300280) for N13PGL
5)	15	2011/9/28	for N13PGS strap pin by NV review	change RV73 BOM sstructure to N13PGS@(34.8K) & N13PGL@(45.3K)
				change RV54 to @
				change RV79 BOM sstructure to N13PGS@(20K) & N13PGL@(10K)
				change RV76 to 10K and N13PGS@
				change RV98 to GSDIS@
				change RV75 to GSOPT@
6)	22	2011/9/29B	by ESD demand	change D84 to SCA00001L00
7)	35	2011/9/29B	by ESD demand	change D82 to SCA00001L00
8)	37	2011/9/29B	by ESD demand	change D92 to SCA00001L00
9)	05	2011/10/05A	follow HW4 check list	reserve decoupling cap CC66, CC67, CC70 for H_PM_SYNC & H_PECI, BUF_CPU_RST#
11)	28	2011/10/05A	by Customer demand	add LVDS dual channel signal
12)	22	2011/10/05A	by Customer demand	add LVDS dual channel signal and 0ohm: R267 R268 R269 R270 R283 R329 R333 R337 (OPTFHD@)
				and R500 R501 R502 R503 R504 R505 R507 R508 (3D@)
13)	26	2011/10/05A	by Customer demand	add RH277 BOM structure : OPTFHD@
14)	47	2011/10/05A	follow HW4 check list	add unused Dual MOS: Q7B,Q6B
15)	15	2011/10/18a	by NV demaend	change RV89 to 10k (SD034100280) for N13PGL
16)	10	2011/10/18a	for PEG reversal	change RC79 from @ to always mount
17)	44	2011/10/18a	discuss with EC	change Function_LED from EC_GPIO4D, PIN86 to EC_GPIO11, PIN25
				change HDPLOCK from EC_GPIO11, PIN25 to EC_GPIO4D, PIN86
				add GPUPWR_SKIN# on EC_GPIO13, pin27
				change PWRMOS_TEMP from EC_GPIO50, PIN89 to EC_GPIO43, PIN76
				change HDPACT from EC_GPIO43, PIN76 to EC_GPIO50, PIN89
				change RB28 pin1 from PWR_GPS_DOWN# to GPUPWR_SKIN#
				reserve SUSACK# and PCH_SUSPWRDN# by SW demand
18)	27	2011/10/18a	by SW ME demand	change PCH_SUSPWRDN_R to PCH_SUSPWRDN#_R
				add PCH_SUSPWRDN# to EC and RH132
				remove T75
				change SUSACK# to SUSACK#_R
				add RH133 and SUSACK# to EC
19)	46	2011/11/1	new touch pad add new function	add JTP connector Pin 5 (PM_SMBCLK) , Pin6 (PM_SMBDATA)
20)	36	2011/11/1	TV tuner(BCAS) 16V reserve	add RM15 and RM16 reserve for TV tuner (BCAS)
21)	42	2011/11/1	avoid SM_EN floating	reserve RA43 for SM_EN 100K pull down reserve
22)	42	2011/11/1	for vendor request	exchange location of RA28 and CA42
23)	42	2011/11/1	for vendor request	RA26 pin2 change name from OSC_IN to OSC_OUT
24)	42	2011/11/1	for vendor request, S&M HP need shut down	delete DA1. add RA19 ,QA5 ,RA42 ,
25)	32	2011/11/2	for lot6 0.5W power consumption	delete CH57 ,PJ3 then add PJ5, QH6, CH59, RH228
26)	47	2011/11/2	for lot6 0.5W power consumption	add R5545, Q5527, R5529, R5534
27)	47	2011/11/3	for NV power sequence	R434 change from 220K to 330K
28)	47	2011/11/3	for NV power sequence	change net name from DGPU_PWR_EN# to VGA_PWROK#
29)	32	2011/11/3	for lot6 0.5W power consumption	reserve RH228
30)	46	2011/11/3	for lot6 0.5W power consumption	change D21 power from +5VL to +5VALW
31)	44	2011/11/7	for lot6 0.5W power consumption	add EC pin 70 for PCH_PWR_EN
32)	29	2011/11/7	for NV sequence	delete RH287 for NV sequence
33)	29	2011/11/7	for NV sequence	RH175 change to always mount
34)	29	2011/11/7	for TV tuner 16VS over current Pin	delete RH174 and RH1
35)	29	2011/11/7	for TV tuner 16VS over current Pin	change PCH D44 ball trace name to LNB_OC#
36)	29	2011/11/7	for TV tuner 16VS over current Pin	add RH326 for LNB_OC# pull high
37)	42	2011/11/9	for vendor request	exchange CA42 and RA28 location
38)	40	2011/11/9	for vendor request	add RT67 RT68 RT69 RT70 RT72 RT73
39)	36	2011/11/9	for EMI request	reserve CCL10 for EMI request
40)	37	2011/11/9	for EMI request	reserver RL29 CL43 for EMI request
41)	29	2011/11/9	EC common core for WL_OFF#	PCH pin F46 and RH299 chagne net name from WL_OFF# to PCH_GPIO55
42)	44	2011/11/9	EC common core for WL_OFF#	change EC pin 29 net name from CPSETIN to WL_OFF#
43)	36	2011/11/9	EC common core for WL_OFF#	add R5546 for WL_OFF# pull high to +3V_WLAN
44)	44	2011/11/9	EC common core for WL_OFF#	CPSETIN signal change from EC pin 29 to EC pin 74
45)	44	2011/11/9	LNB_OC# change from PCH pin D44 to EC pin 119	add RH327 pull high to +3VS for LNB_OC#
46)	36	2011/11/15	for vendor demand	change YCL1 from SJ10000CU00 to SJ10000EF00, CCL4 and CCL5 from 30pF to 15pF
47)	15	2011/11/15	for NV recommend	change BOM structure of RV54 from @ to N13PGS@
48)	47	2011/11/15c	for NV DG demand	change R460 from 470ohm to 22ohm
49)	36	2011/11/15d	by EMI demand	change BOM structure of CCL10 from @ to GCLK@
50)	37	2011/11/15d	by EMI demand	change BOM structure of RL29, CL43 from @ to GCLK@

THIS SHEET OF ENGINEERING DRAWING IS THE PROPRIETARY PROPERTY OF COMPAL ELECTRONICS, INC. AND CONTAINS CONFIDENTIAL AND TRADE SECRET INFORMATION. THIS SHEET MAY NOT BE TRANSFERED FROM THE CUSTODY OF THE COMPETENT DIVISION OF R&D DEPARTMENT EXCEPT AS AUTHORIZED BY COMPAL ELECTRONICS, INC. NEITHER THIS SHEET NOR THE INFORMATION IT CONTAINS MAY BE USED BY OR DISCLOSED TO ANY THIRD PARTY WITHOUT PRIOR WRITTEN CONSENT OF COMPAL ELECTRONICS, INC.

HW PIR (Product Improve Record)

QFKAA LA-8391P SCHEMATIC CHANGE LIST
REVISION CHANGE: 0.3
GERBER-OUT DATE: 2011/12/22

Item	Page	Date	Request	Solution
1)	27	2011/11/29a	For DVT hang	Add CH23 CH24 CH25 for SW-node noise.
2)	13	2011/11/29a	For ME request	Change location from JLVDS to JLVDS4
3)	47	2011/12/05a	For reduce Rds-on of +VRAM_1.5VS	Add Q44
4)	05	2011/12/07a	For leakage	Change from +3VALW to +3VALW_PCH of UC1
5)	44	2011/12/13a	For design change	Change LNB_EN from PCH to EC and delte RH315, add RB11
6)	24	2011/12/13a	For HDMI leakage	Change Pin 5 of U9 from +5VL to +HDMI_5V_OUT
7)	44	2011/12/13a	For design change RF LED control pin	Change RF LED control pin from PCH to EC.
8)	35	2011/12/15a	For ME request	Change JFP/JPOWER/JFUN from zif to non-zif
9)	40	2011/12/15a	For adjust EXT USB3.0 sequence	Change +3V to +3V_USB control pin from syson to PM_SLP_S4#
10)	41	2011/12/15a	For adjust EXT USB3.0 sequence	Change +3V to +3V_USB control pin from syson to PM_SLP_S4#
11)	22	2011/12/17a	For prevent LVDS burn issue	Add F3 (Poly fuse to prevent burn)
12)	46	2011/12/19a	For ME delete stand-off	Delete H25,H26,H27
13)	46	2011/12/19a	For Wimax flash issue	Change +5VS to +3VS of Wimax LED
14)	46	2011/12/19a	For layout request	Add net name +5VS_FUNC with Function conn power pin
15)	15	2011/12/20a	For NV request	Change RV76 from 10K to 20K
16)	46	2011/12/21a	For power rail change	Change WiMAX LED power rail from +5VS to +5VALW
17)	16	2011/12/22a	For NV request	Change LV6 from bead to 4.3ohm resistor
18)	29	2011/12/22a	For EMI request	Add CH29 for EMI request

QFKAA LA-8391P SCHEMATIC CHANGE LIST
REVISION CHANGE: 1.0
GERBER-OUT DATE: 2012/02/02

Item	Page	Date	Request	Solution
1)	36	2012/01/12a	For GCLK	Add CCL13(0.1u) for +3VALW
2)	15	2012/01/12a	For NV suggestion	Change RV 76 from 20K to 45K(Support GEN3)
3)	36	2012/01/12a	For MSATA pin define.	Add RM30 (MSATA define that Pin22 is reserve, so other function need to add PLT_RST#).
4)	36	2012/01/18a	For GLCK	Change CCL13 from +3VLAW to +3VALW_GCLK
5)	41	2012/01/30a	For TV tuner use PCIE interface	Add RM31~RM35 and QM2
6)	26	2012/01/30a	For TV tuner use PCIE interface	Change PCIE 6 from USB to TV tuner
7)	26	2012/01/30a	For TV tuner use PCIE interface	Change CLK_USB30 to CLK_TV and CLKREQ_USB30# to CLKREQ_TV#
8)	11	2012/01/30a	For M1 only	Unmount RC117/RC118/QC7/QC8
9)	46	2012/01/30a	For MP	Unmount SW3
10)	15	2012/01/30a	For NV suggestion	Change RV 73 to 5K
11)	43	2012/01/30a	For EMI request	Add CA51
12)	41	2012/01/30a	For Internal USB30 only	Delete Page 41

THIS SHEET OF ENGINEERING DRAWING IS THE PROPRIETARY PROPERTY OF COMPAL ELECTRONICS, INC. AND CONTAINS CONFIDENTIAL AND TRADE SECRET INFORMATION. THIS SHEET MAY NOT BE TRANSFERED FROM THE CUSTODY OF THE COMPETENT DIVISION OF R&D DEPARTMENT EXCEPT AS AUTHORIZED BY COMPAL ELECTRONICS, INC. NEITHER THIS SHEET NOR THE INFORMATION IT CONTAINS MAY BE USED BY OR DISCLOSED TO ANY THIRD PARTY WITHOUT PRIOR WRITTEN CONSENT OF COMPAL ELECTRONICS, INC.

www.s-manuals.com