COMPAL CONFIDENTIAL

MODEL NAME : *QAL80*

PCB NO : *LA-7781P (DA60000OP10)*

BOM P/N : *4319EK31L01*

GPIO MAP: E4_VC_GPIO_map_rev_1.1

Dalmore 14 UMA

@ *Ivy Bridge + Panther POINT*

2012-02-24

REV : 1.0 (A00)

@ : Nopop Component

CONN@ : Connector Component

MB Type	BOM P/N	
ATG TPM	L51	1@ 5@
ATG Non-TPM	L52	2@ 5@
TPM	L01	1@
Non-TPM	L02	2@

MB PCB

Part Number	Description
DA60000OP10	PCB 0LD LA-7781P REV1 M/B UMA

PROPRIETARY NOTE: THIS SHEET OF ENGINEERING DRAWING AND SPECIFICATIONS CONTAINS CONFIDENTIAL TRADE SECRET AND OTHER PROPRIETARY INFORMATION OF DELL INC. ("DELL") THIS DOCUMENT MAY NOT BE TRANSFERRED OR COPIED WITHOUT THE EXPRESS WRITTEN AUTHORIZATION OF DELL. IN ADDITION, NEITHER THIS SHEET NOR THE INFORMATION IT CONTAINS WAY BE USED BY OR DISCLOSED TO ANY THIRD PARTY WITHOUT DELL'S EXPRESS WRITTEN CONSENT.

DELL CONFIDENTIAL/PROPRIETARY

Compal Electronics, Inc.		
Title: Cover Sheet		
Size	Document Number: LA-7781	Rev 1.0
Date: Friday, February 24, 2012	Sheet 1 of 61	

Block Diagram

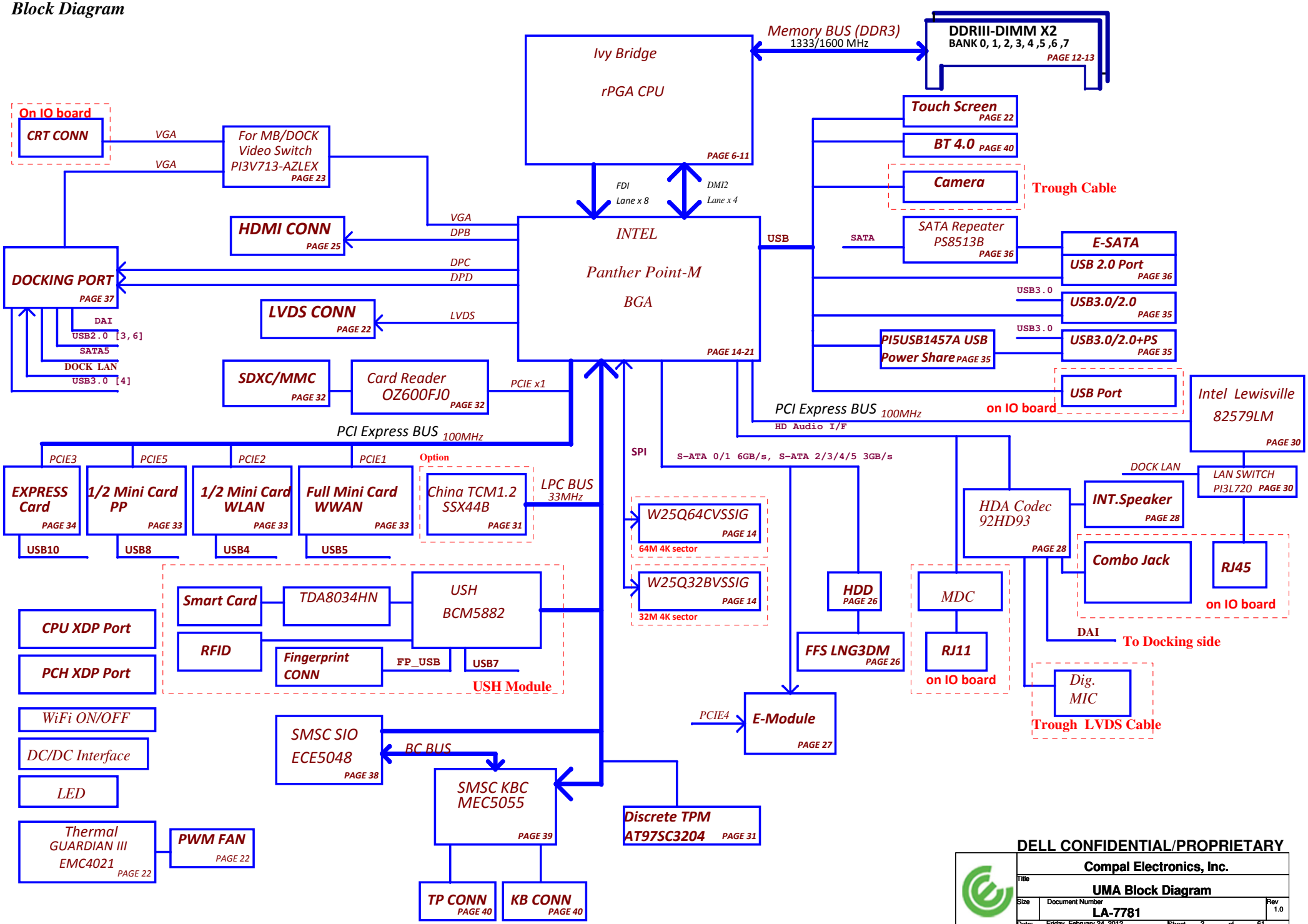

DELL CONFIDENTIAL/PROPRIETARY

Compal Electronics, Inc.		
Title: UMA Block Diagram		
Size	Document Number: LA-7781	Rev 1.0
Date: Friday, February 24, 2012	Sheet 2 of 61	

POWER STATES

State \ Signal	SLP S3#	SLP S4#	SLP S5#	SLP A#	ALWAYS PLANE	M PLANE	SUS PLANE	RUN PLANE	CLOCKS
S0 (Full ON) / M0	HIGH	HIGH	HIGH	HIGH	ON	ON	ON	ON	ON
S3 (Suspend to RAM) / M3	LOW	HIGH	HIGH	HIGH	ON	ON	ON	OFF	OFF
S4 (Suspend to DISK) / M3	LOW	LOW	HIGH	HIGH	ON	ON	OFF	OFF	OFF
S5 (SOFT OFF) / M3	LOW	LOW	LOW	HIGH	ON	ON	OFF	OFF	OFF
S3 (Suspend to RAM) / M-OFF	LOW	HIGH	HIGH	LOW	ON	OFF	ON	OFF	OFF
S4 (Suspend to DISK) / M-OFF	LOW	LOW	HIGH	LOW	ON	OFF	OFF	OFF	OFF
S5 (SOFT OFF) / M-OFF	LOW	LOW	LOW	LOW	ON	OFF	OFF	OFF	OFF

PM TABLE

State \ power plane	+PWR_SRC_S +5V_ALW +3.3V_ALW_PCH +3.3V_RTC_LDO	+3.3V_SUS +1.5V_MEM	+5V_RUN +3.3V_RUN +1.8V_RUN +1.5V_RUN +0.75V_DDR_VTT +VCC_CORE +1.05V_RUN_VTT +1.05V_RUN	+3.3V_M +1.05V_M	+3.3V_M +1.05V_M (M-OFF)
S0	ON	ON	ON	ON	ON
S3	ON	ON	OFF	ON	OFF
S5 S4/AC	ON	OFF	OFF	ON	OFF
S5 S4/AC don't exist	OFF	OFF	OFF	OFF	OFF

need to update Power Status and PM Table

SATA	DESTINATION
SATA 0	HDD
SATA 1	ODD/ E3 Module Bay
SATA 2	NA
SATA 3	NA
SATA 4	ESATA
SATA 5	Dock

	USB PORT#	DESTINATION
PCH	0	JUSB1 (Right side Top)
	1	JUSB2 (Right side Bottom)
	2	JESA1 (Right side ESATA)
	3	DOCKING
	4	WLAN
	5	WWAN
	6	DOCKING
	7	USH->BIO
	8	JMINI3(Flash)
	9	JUSB (Left side)
	10	Express card
	11	Bluetooth
	12	Camera
	13	LCD Touch

USH	0	BIO
	1	NA

PCI EXPRESS	DESTINATION
Lane 1	MINI CARD-1 WWAN
Lane 2	MINI CARD-2 WLAN
Lane 3	Express card
Lane 4	E3 Module Bay (USB3)
Lane 5	1/2vMINI CARD-3 PCIE
Lane 6	MMI
Lane 7	10/100/1G LOM
Lane 8	None

UMA DP/HDMI Port	Connetion
Port B	MB HDMI Conn
Port C	Dock DP port 2
Port D	Dock DP port 1

Layer No.	Name	Er	Material	Thickness (Material SPEC.) Unit : mil	Thickness (Actuality) Unit : mil
			SolderMask		0.50
			Add Plating		1.45
1	Top		Copper foil	0.5oz	0.65
			Prepreg	1080	2.60
2	VCC		Copper foil	1oz	1.35
			Core	3mil	3.00
3	Sig 1		Copper foil	1oz	1.35
			Prepreg	7628 HRC*2+2116+7628 HRC*2	33.50
4	Sig 2		Copper foil	1oz	1.35
			Core	3mil	3.00
5	GND		Copper foil	1oz	1.35
			Prepreg	1080	2.60
6	Bottom		Copper foil	0.5oz	0.65
			Add Plating		1.45
			SolderMask		0.50
Overall Thickness (1.4mm ± 10%)			55.1		55.30000

PROPRIETARY NOTE: THIS SHEET OF ENGINEERING DRAWING AND SPECIFICATIONS CONTAINS CONFIDENTIAL TRADE SECRET AND OTHER PROPRIETARY INFORMATION OF DELL INC. ("DELL") THIS DOCUMENT MAY NOT BE TRANSFERRED OR COPIED WITHOUT THE EXPRESS WRITTEN AUTHORIZATION OF DELL. IN ADDITION, NEITHER THIS SHEET NOR THE INFORMATION IT CONTAINS WAY BE USED BY OR DISCLOSED TO ANY THIRD PARTY WITHOUT DELL'S EXPRESS WRITTEN CONSENT.

DELL CONFIDENTIAL/PROPRIETARY

Compal Electronics, Inc.

Title: Index and Config.

Size | Document Number: LA-7781 | Rev 1.0

Date: Friday, February 24, 2012 | Sheet 3 of 61

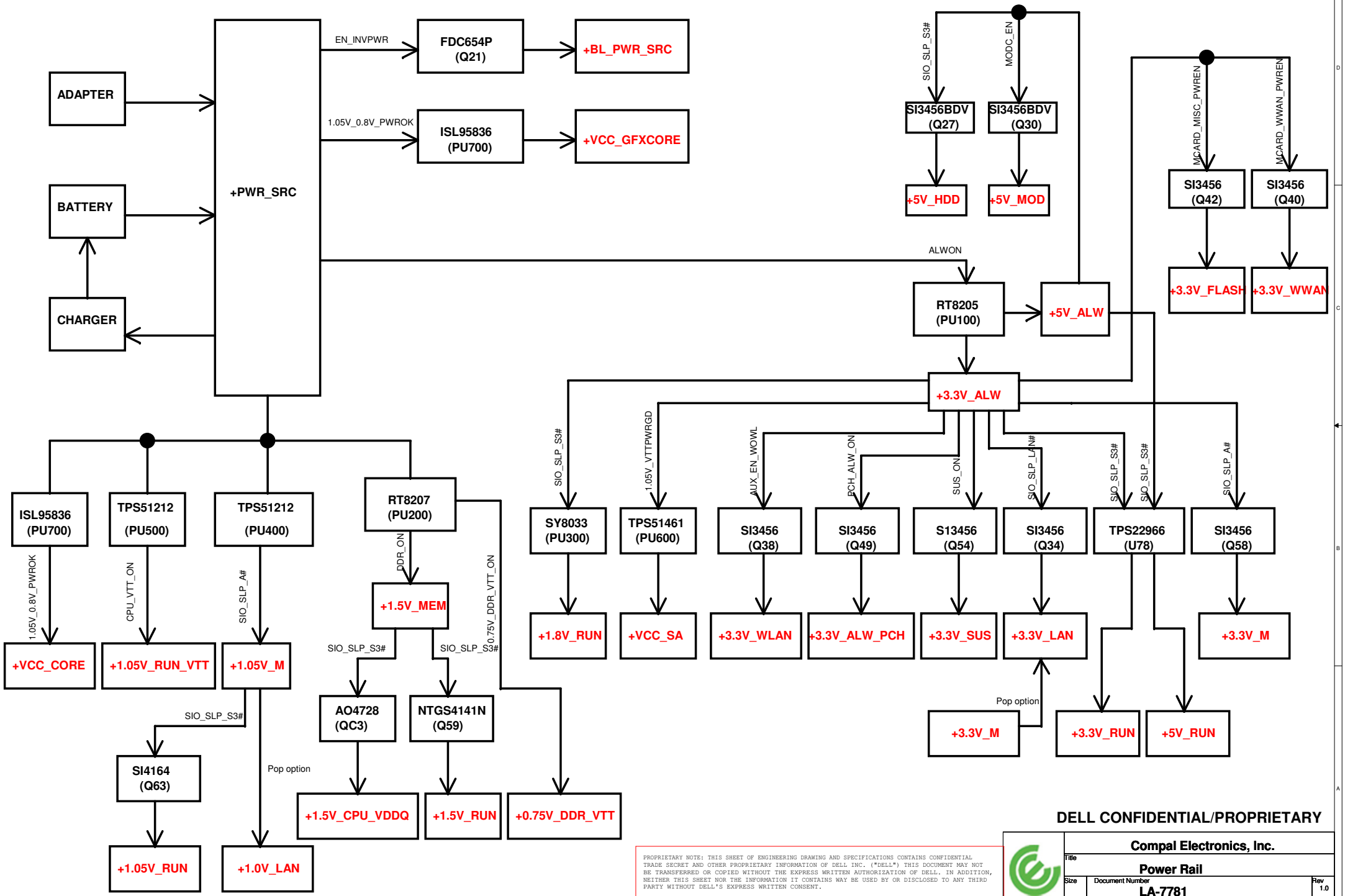

DELL CONFIDENTIAL/PROPRIETARY

PROPRIETARY NOTE: THIS SHEET OF ENGINEERING DRAWING AND SPECIFICATIONS CONTAINS CONFIDENTIAL TRADE SECRET AND OTHER PROPRIETARY INFORMATION OF DELL INC. ("DELL") THIS DOCUMENT MAY NOT BE TRANSFERRED OR COPIED WITHOUT THE EXPRESS WRITTEN AUTHORIZATION OF DELL. IN ADDITION, NEITHER THIS SHEET NOR THE INFORMATION IT CONTAINS WAY BE USED BY OR DISCLOSED TO ANY THIRD PARTY WITHOUT DELL'S EXPRESS WRITTEN CONSENT.

Compal Electronics, Inc.
Title: Power Rail
Size
Document Number: LA-7781
Rev 1.0
Date: Friday, February 24, 2012
Sheet 4 of 61

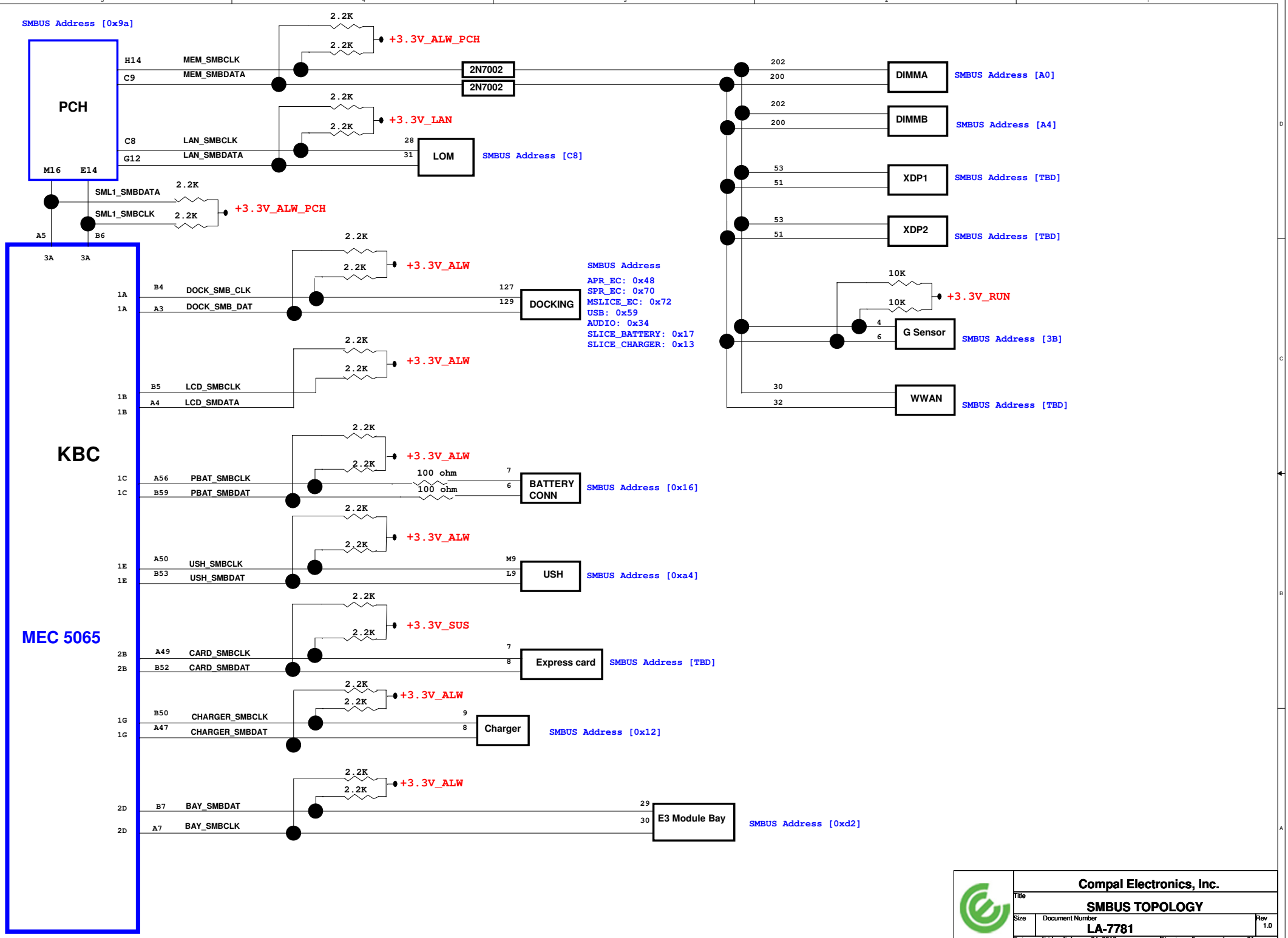

Compal Electronics, Inc.

Title: SMBUS TOPOLOGY

Size | Document Number: LA-7781 | Rev 1.0

Date: Friday, February 24, 2012 | Sheet 5 of 61

(1)PEG_RCOMPO (H22) use 4mil connect to PEG_ICOMPI, then use 4mil connect to RC2.
(2)PEG_ICOMPO use 12mil connect to RC2

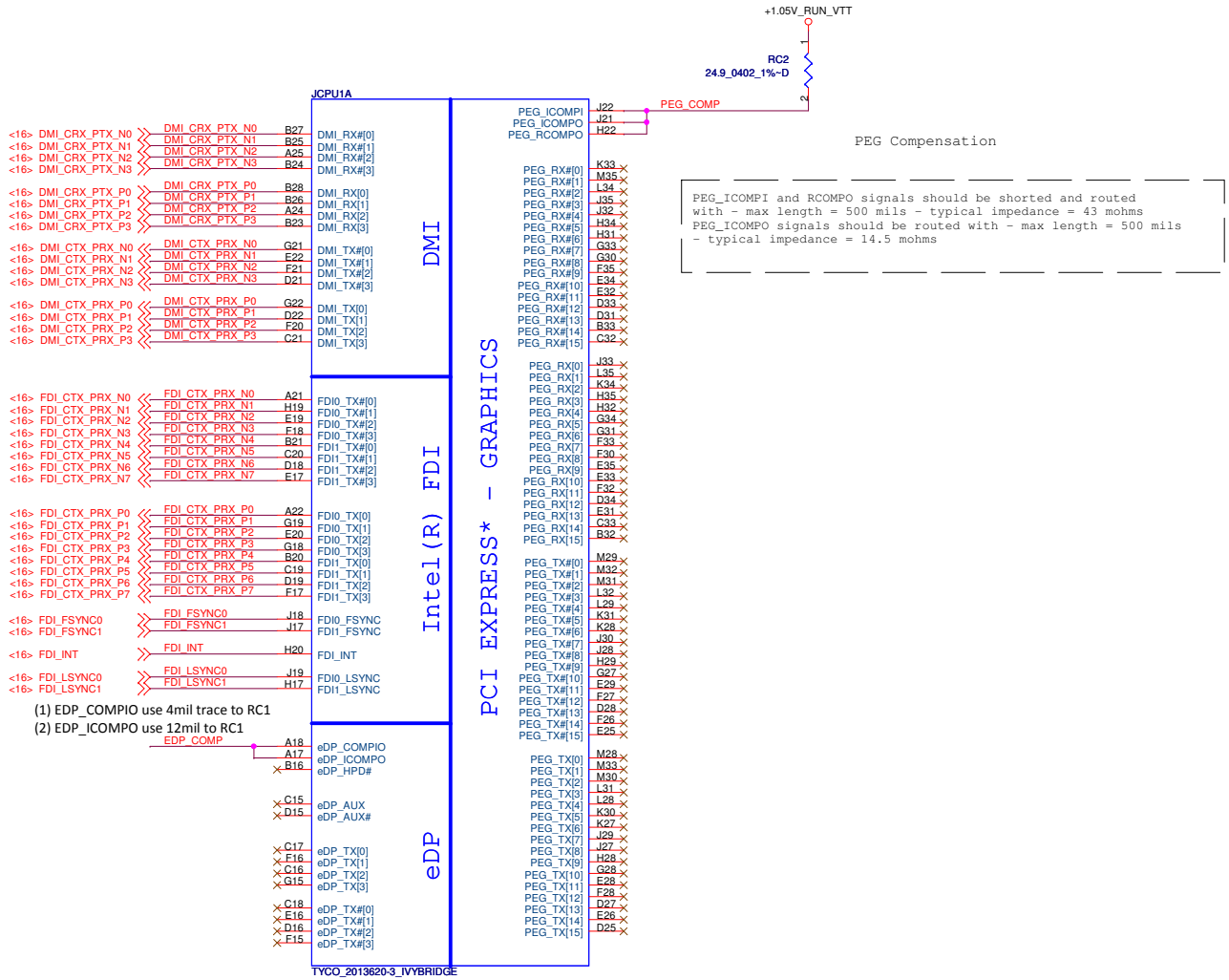

PEG Compensation

PEG_ICOMPI and RCOMPO signals should be shorted and routed with - max length = 500 mils - typical impedance = 43 mohms
PEG_ICOMPO signals should be routed with - max length = 500 mils - typical impedance = 14.5 mohms

(1) EDP_COMPIO use 4mil trace to RC1
(2) EDP_ICOMPO use 12mil to RC1

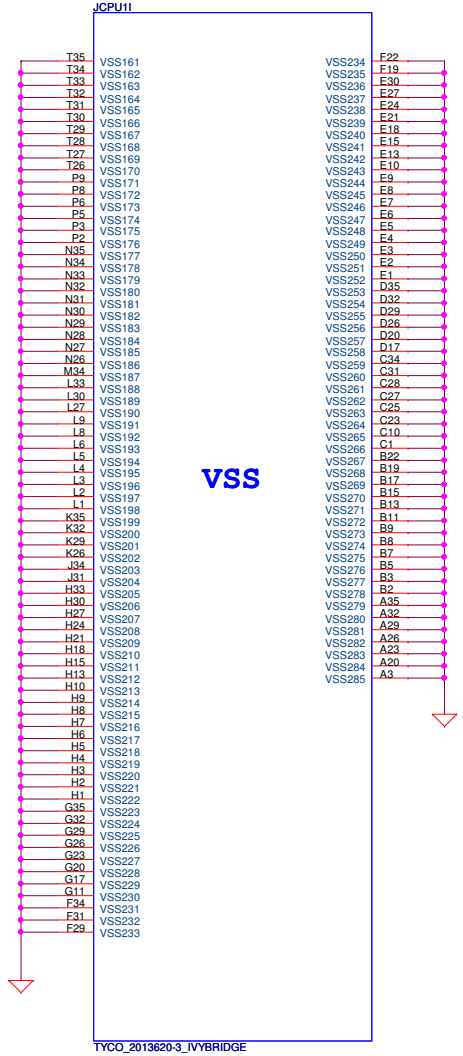

DP Compensation

eDP_COMPIO and ICOMPO signals should be shorted near balls and routed with typical impedance <25 mohms

DELL CONFIDENTIAL/PROPRIETARY

PROPRIETARY NOTE: THIS SHEET OF ENGINEERING DRAWING AND SPECIFICATIONS CONTAINS CONFIDENTIAL TRADE SECRET AND OTHER PROPRIETARY INFORMATION OF DELL INC. ("DELL") THIS DOCUMENT MAY NOT BE TRANSFERRED OR COPIED WITHOUT THE EXPRESS WRITTEN AUTHORIZATION OF DELL. IN ADDITION, NEITHER THIS SHEET NOR THE INFORMATION IT CONTAINS WAY BE USED BY OR DISCLOSED TO ANY THIRD PARTY WITHOUT DELL'S EXPRESS WRITTEN CONSENT.

Compal Electronics, Inc.			
Title: Ivy Bridge (1/6)			
Size	Document Number: LA-7781		Rev 1.0
Date: Friday, February 24, 2012	Sheet 6 of 61		

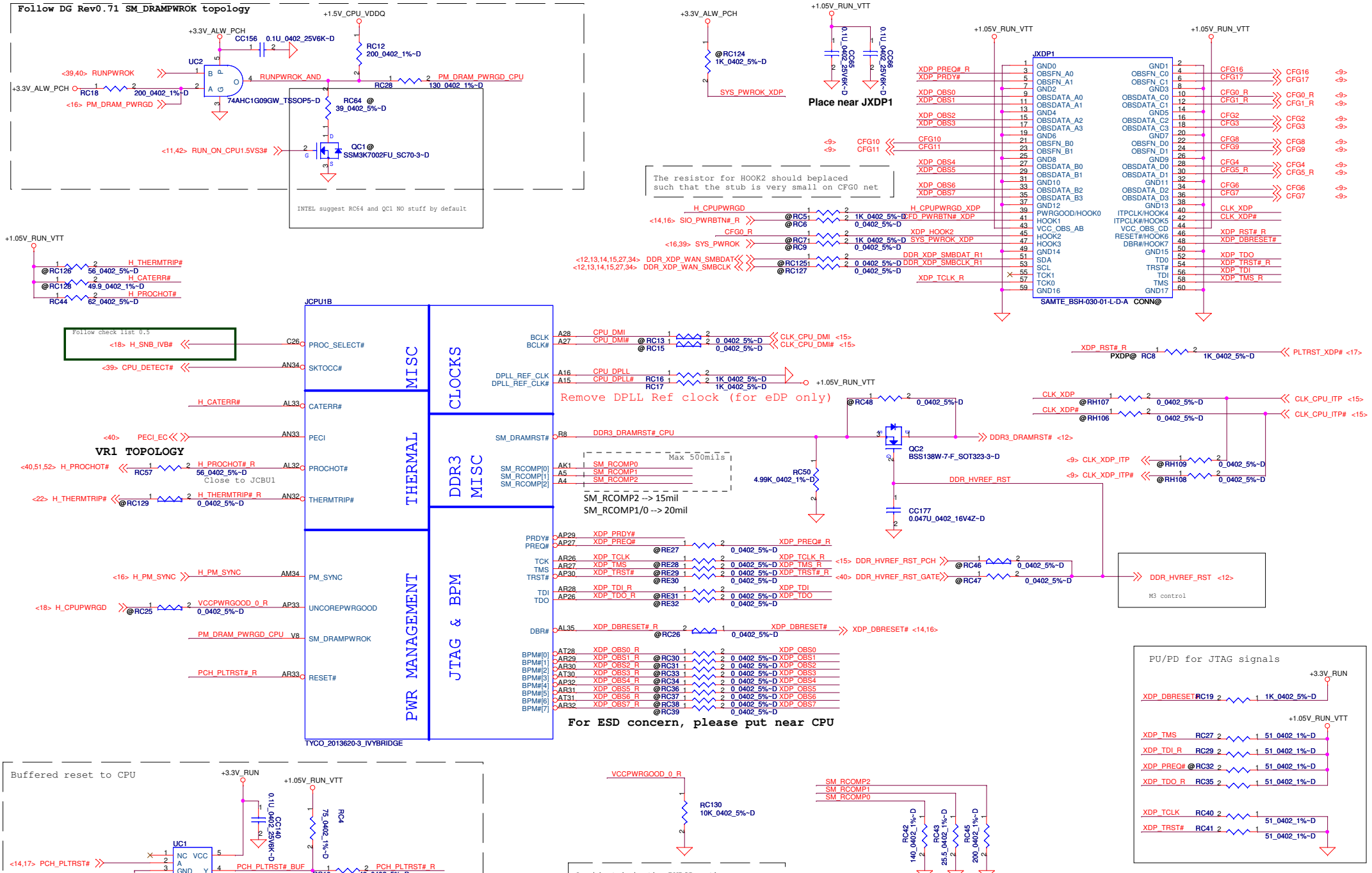

DELL CONFIDENTIAL/PROPRIETARY

PROPRIETARY NOTE: THIS SHEET OF ENGINEERING DRAWING AND SPECIFICATIONS CONTAINS CONFIDENTIAL TRADE SECRET AND OTHER PROPRIETARY INFORMATION OF DELL INC. ("DELL") THIS DOCUMENT MAY NOT BE TRANSFERRED OR COPIED WITHOUT THE EXPRESS WRITTEN AUTHORIZATION OF DELL. IN ADDITION, NEITHER THIS SHEET NOR THE INFORMATION IT CONTAINS WAY BE USED BY OR DISCLOSED TO ANY THIRD PARTY WITHOUT DELL'S EXPRESS WRITTEN CONSENT.

Compal Electronics, Inc.		
Title: Ivy Bridge (1/6)		
Size	Document Number: LA-7781	Rev 1.0
Date: Friday, February 24, 2012	Sheet 7 of 61	

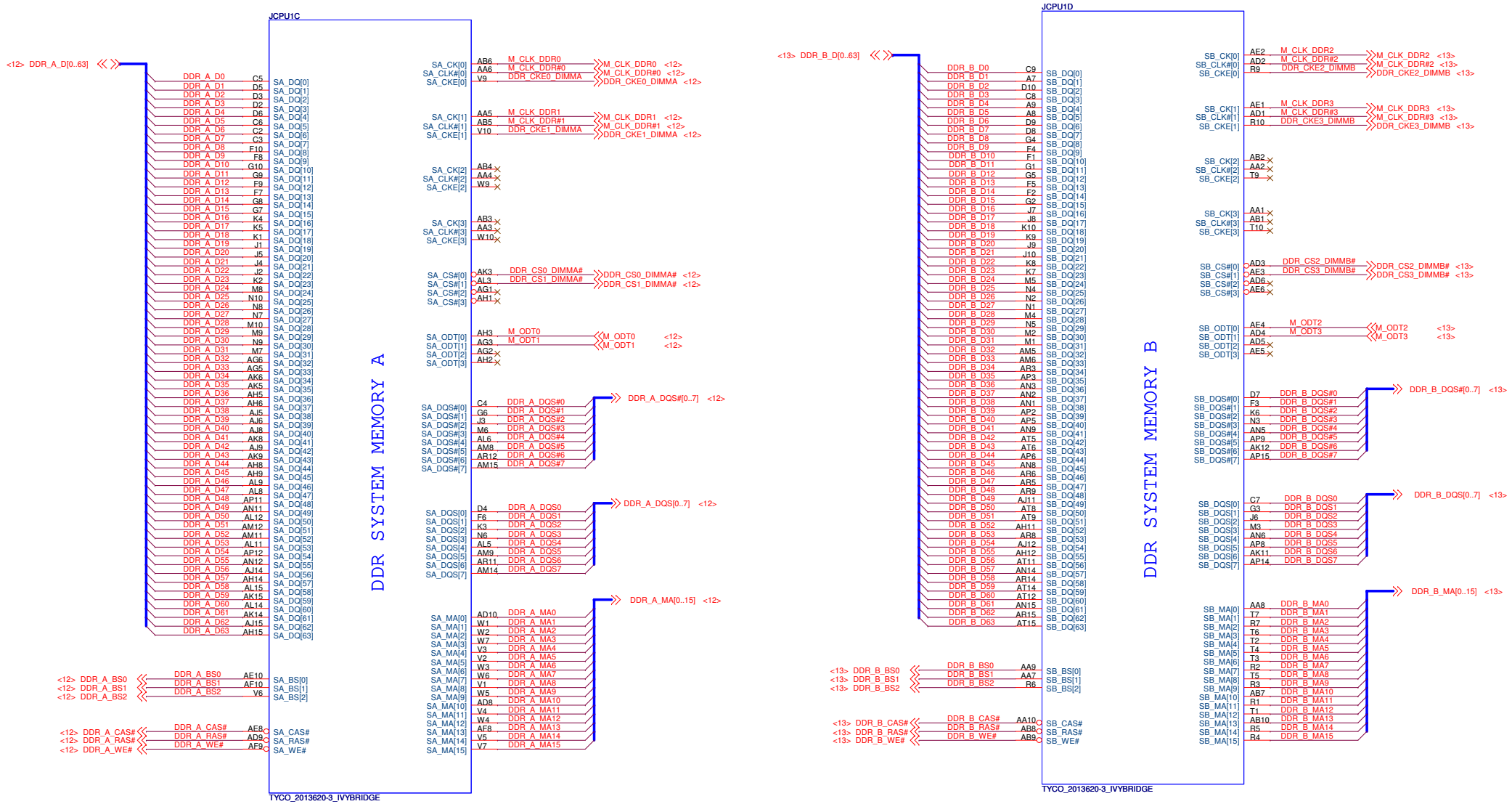

PROPRIETARY NOTE: THIS SHEET OF ENGINEERING DRAWING AND SPECIFICATIONS CONTAINS CONFIDENTIAL TRADE SECRET AND OTHER PROPRIETARY INFORMATION OF DELL INC. ("DELL") THIS DOCUMENT MAY NOT BE TRANSFERRED OR COPIED WITHOUT THE EXPRESS WRITTEN AUTHORIZATION OF DELL. IN ADDITION, NEITHER THIS SHEET NOR THE INFORMATION IT CONTAINS WAY BE USED BY OR DISCLOSED TO ANY THIRD PARTY WITHOUT DELL'S EXPRESS WRITTEN CONSENT.

DELL CONFIDENTIAL/PROPRIETARY

Compal Electronics, Inc.

Title: **Ivy Bridge (1/6)**

Size | Document Number: **LA-7781** | Rev: 1.0

Date: Friday, February 24, 2012 | Sheet 8 of 61

CFG Straps for Processor

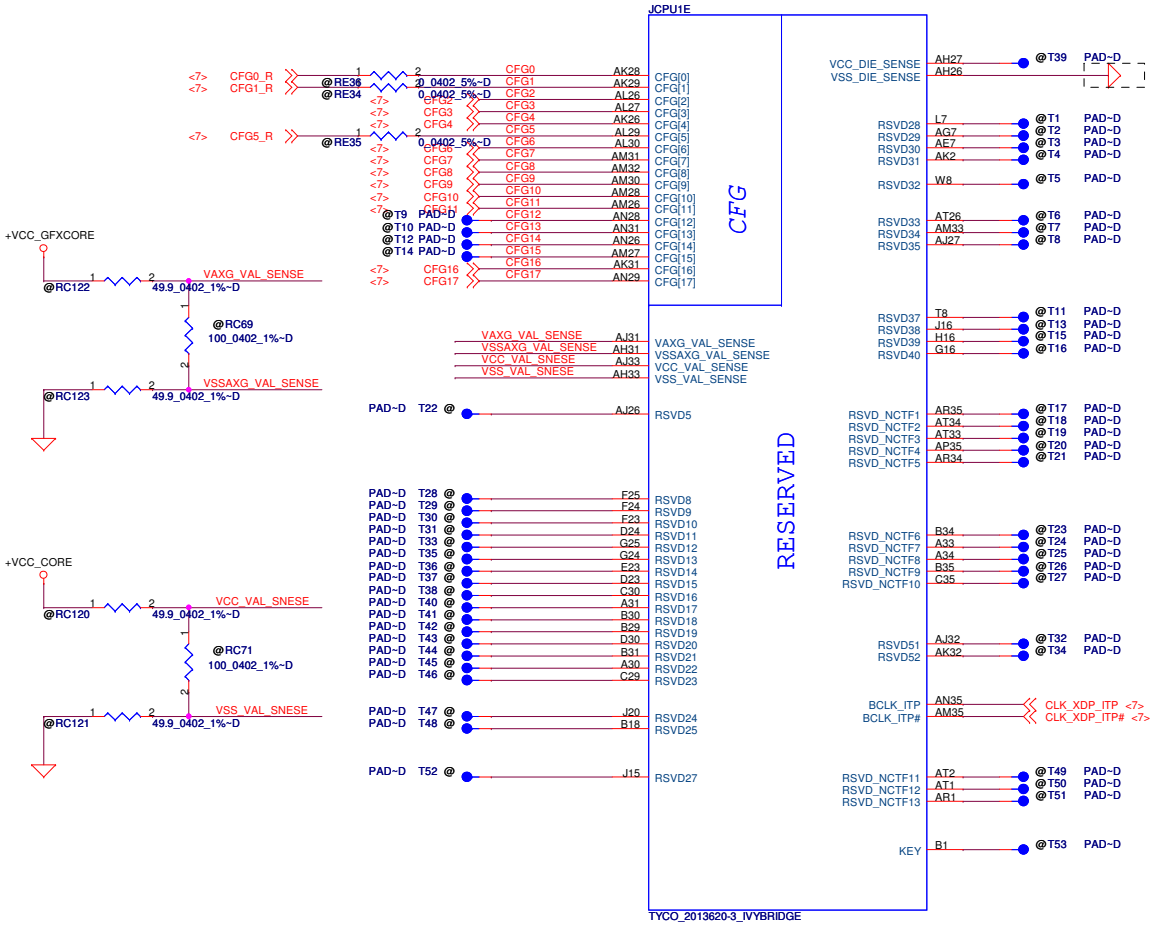

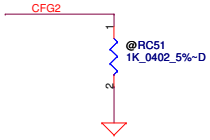

PEG Static Lane Reversal - CFG2 is for the 16x	
CFG2	1:(Default) Normal Operation; Lane # definition matches socket pin map definition 0:Lane Reversed

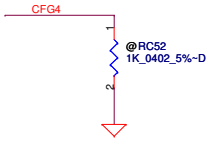

Display Port Presence Strap	
CFG4	1 : Disabled; No Physical Display Port attached to Embedded Display Port 0 : Enabled; An external Display Port device is connected to the Embedded Display Port

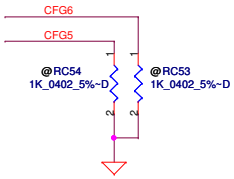

PCIE Port Bifurcation Straps	
CFG[6:5]	11: (Default) x16 - Device 1 functions 1 and 2 disabled 10: x8, x8 - Device 1 function 1 enabled ; function 2 disabled 01: Reserved - (Device 1 function 1 disabled ; function 2 enabled) 00: x8,x4,x4 - Device 1 functions 1 and 2 enabled

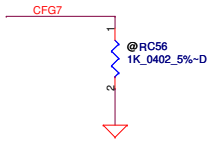

PEG DEFER TRAINING	
CFG7	1: (Default) PEG Train immediately following xxRESETB de assertion 0: PEG Wait for BIOS for training

DELL CONFIDENTIAL/PROPRIETARY

PROPRIETARY NOTE: THIS SHEET OF ENGINEERING DRAWING AND SPECIFICATIONS CONTAINS CONFIDENTIAL TRADE SECRET AND OTHER PROPRIETARY INFORMATION OF DELL INC. ("DELL") THIS DOCUMENT MAY NOT BE TRANSFERRED OR COPIED WITHOUT THE EXPRESS WRITTEN AUTHORIZATION OF DELL. IN ADDITION, NEITHER THIS SHEET NOR THE INFORMATION IT CONTAINS WAY BE USED BY OR DISCLOSED TO ANY THIRD PARTY WITHOUT DELL'S EXPRESS WRITTEN CONSENT.

POWER

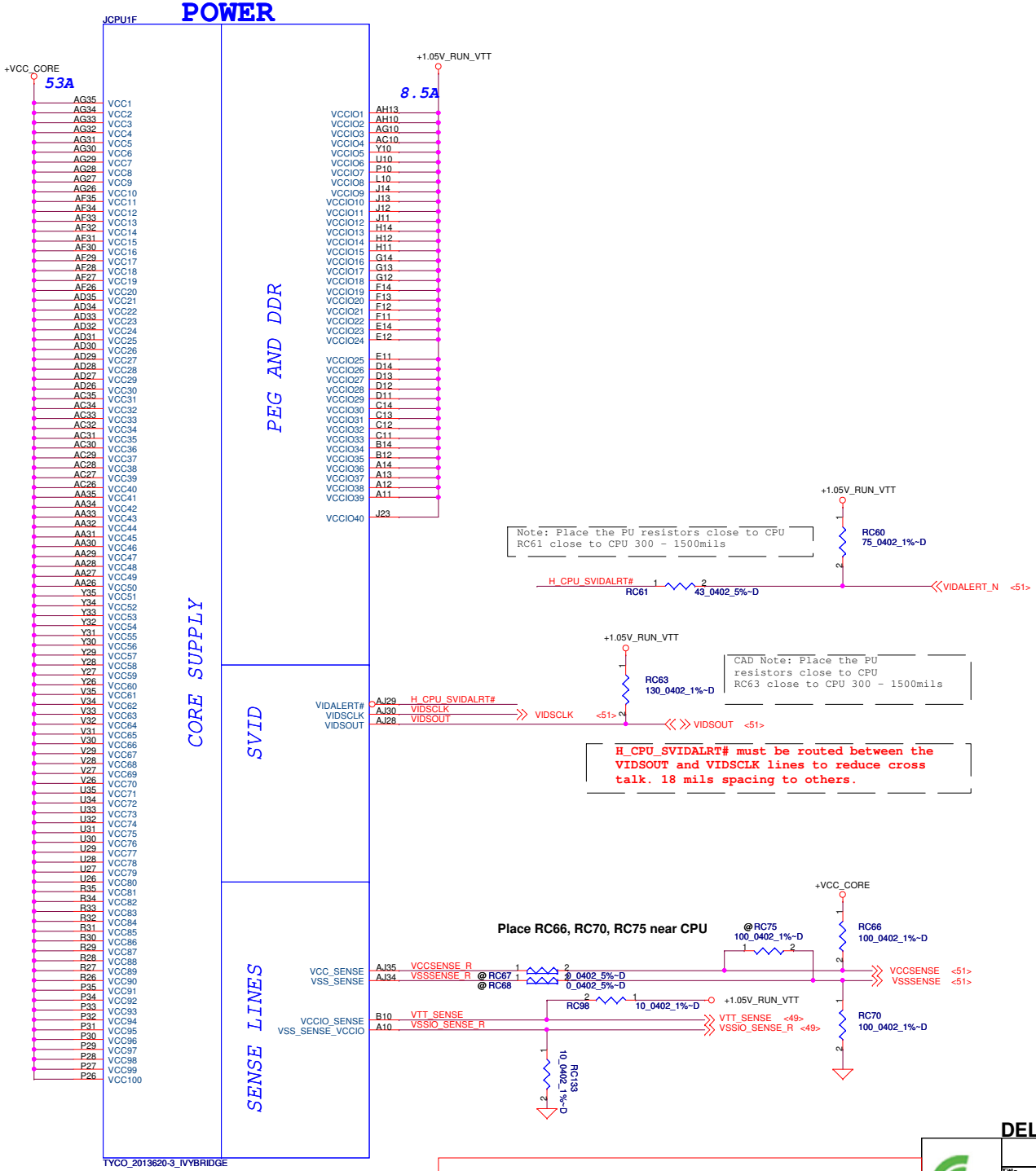

Iccmax current changed for PDDG Rev0.7

CPU Power Rail Table

Voltage Rail	Voltage	S0 Iccmax Current (A)
VCC	0.65-1.3	53
VCCIO	1.05	8.5
VAXG	0.0-1.1	26
VCCPLL	1.8	3
VDDQ	1.5	5
VCCSA	0.65-0.9	6
+1.5V_MEM	1.5	12-16 ★

★ Description

5A to Mem controller(+1.5V_CPU_VDDQ)
5-6A to 2 DIMMs/channel
2-5A to +1.5V_RUN & +0.75V_DDR_VTT

DELL CONFIDENTIAL/PROPRIETARY

PROPRIETARY NOTE: THIS SHEET OF ENGINEERING DRAWING AND SPECIFICATIONS CONTAINS CONFIDENTIAL TRADE SECRET AND OTHER PROPRIETARY INFORMATION OF DELL INC. ("DELL") THIS DOCUMENT MAY NOT BE TRANSFERRED OR COPIED WITHOUT THE EXPRESS WRITTEN AUTHORIZATION OF DELL. IN ADDITION, NEITHER THIS SHEET NOR THE INFORMATION IT CONTAINS WAY BE USED BY OR DISCLOSED TO ANY THIRD PARTY WITHOUT DELL'S EXPRESS WRITTEN CONSENT.

Compal Electronics, Inc.
Title: Ivy Bridge (1/6)
Size: Document Number: LA-7781 Rev: 1.0
Date: Friday, February 24, 2012 Sheet 10 of 61

+1.5V_CPU_VDDQ Source

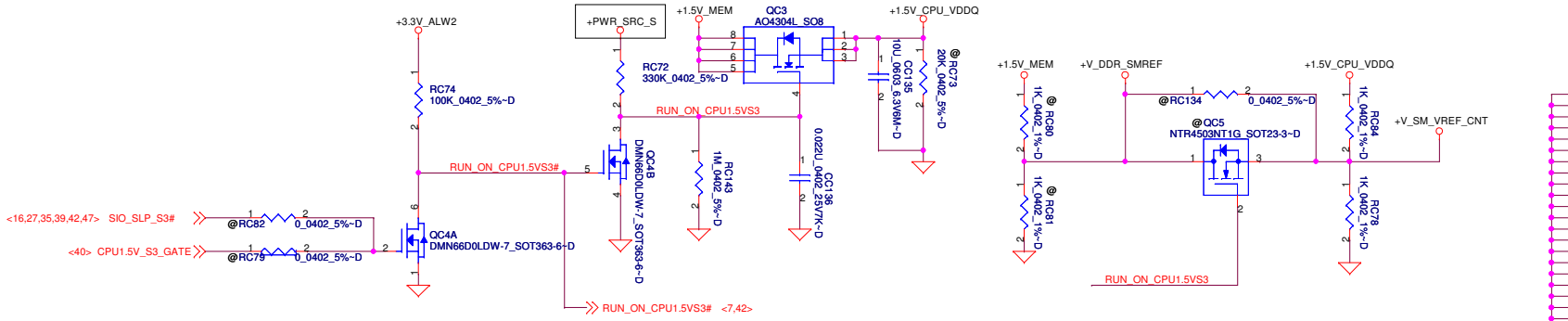

POWER

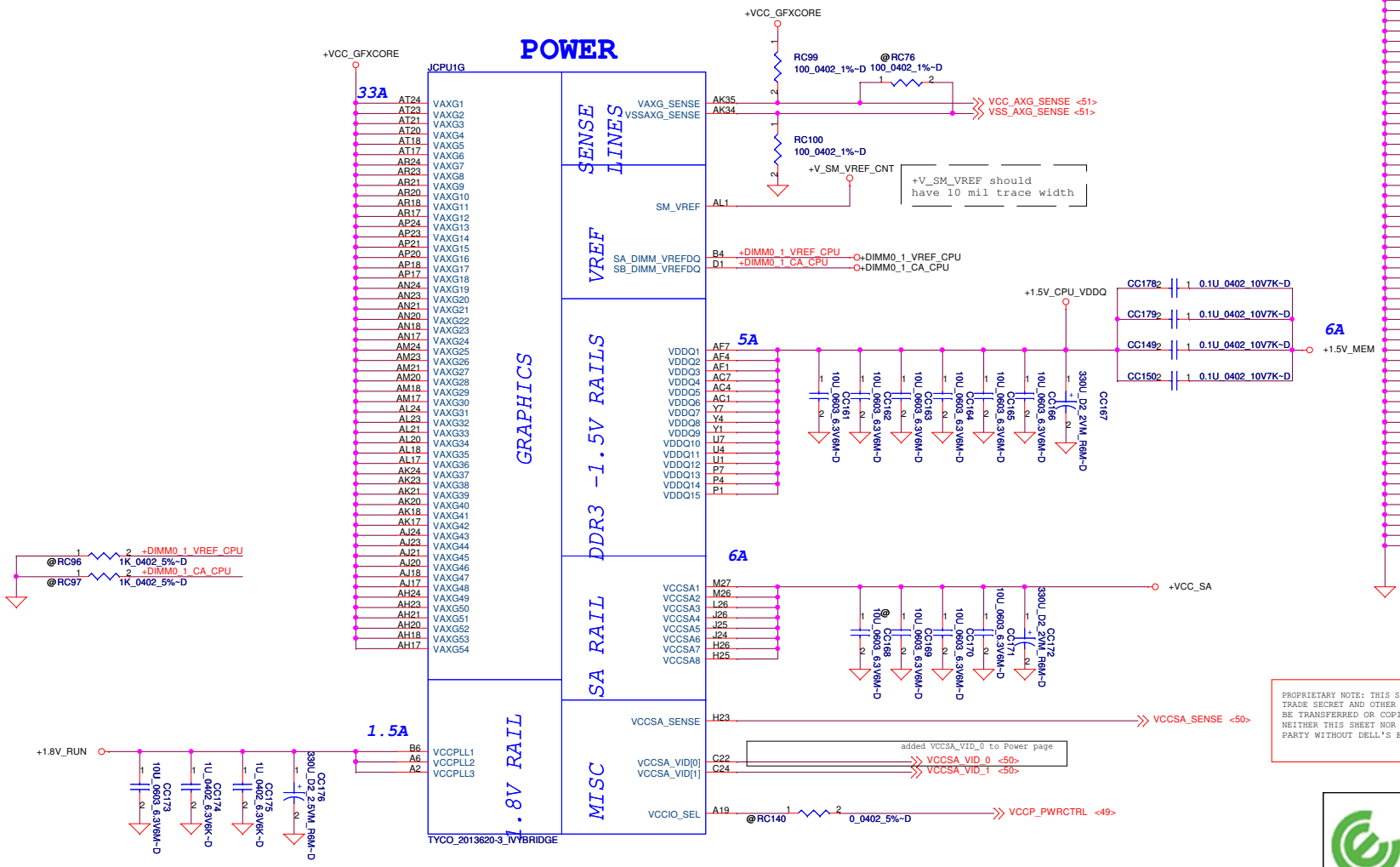

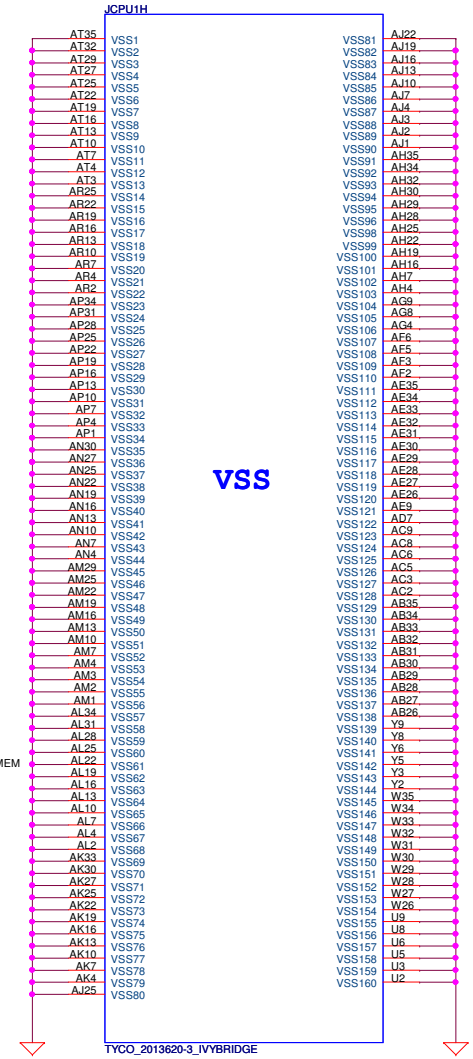

PROPRIETARY NOTE: THIS SHEET OF ENGINEERING DRAWING AND SPECIFICATIONS CONTAINS CONFIDENTIAL TRADE SECRET AND OTHER PROPRIETARY INFORMATION OF DELL INC. ("DELL") THIS DOCUMENT MAY NOT BE TRANSFERRED OR COPIED WITHOUT THE EXPRESS WRITTEN AUTHORIZATION OF DELL. IN ADDITION, NEITHER THIS SHEET NOR THE INFORMATION IT CONTAINS WAY BE USED BY OR DISCLOSED TO ANY THIRD PARTY WITHOUT DELL'S EXPRESS WRITTEN CONSENT.

DELL CONFIDENTIAL/PROPRIETARY

Compal Electronics, Inc.			
Title: Ivy Bridge (1/6)			
Size	Document Number: LA-7781		Rev 1.0
Date: Friday, February 24, 2012	Sheet 11 of 61		

JDIMM1 H=5.2

2-3A to 1 DIMMs/channel

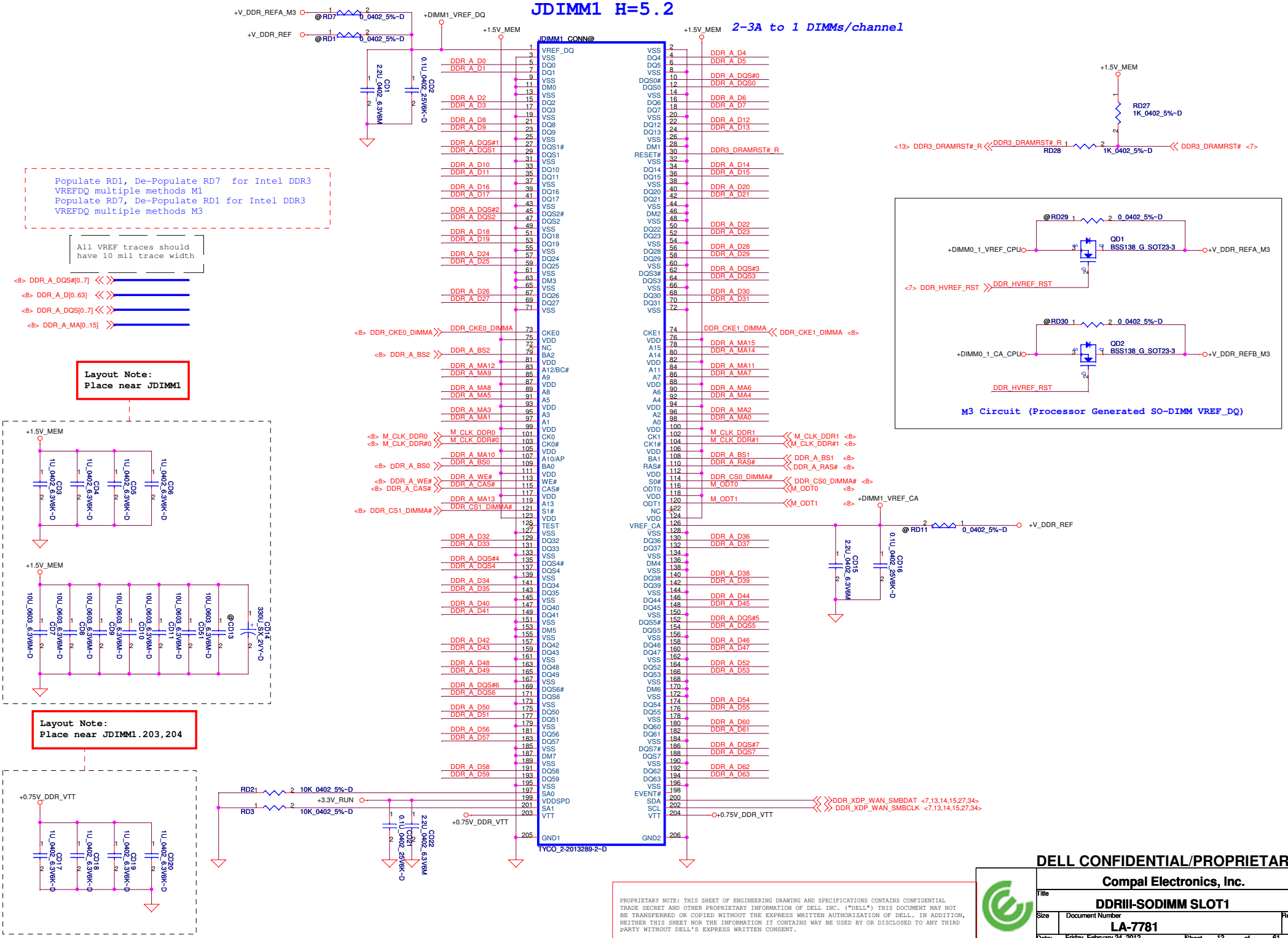

PROPRIETARY NOTE: THIS SHEET OF ENGINEERING DRAWING AND SPECIFICATIONS CONTAINS CONFIDENTIAL TRADE SECRET AND OTHER PROPRIETARY INFORMATION OF DELL INC. ("DELL") THIS DOCUMENT MAY NOT BE TRANSFERRED OR COPIED WITHOUT THE EXPRESS WRITTEN AUTHORIZATION OF DELL. IN ADDITION, NEITHER THIS SHEET NOR THE INFORMATION IT CONTAINS WAY BE USED BY OR DISCLOSED TO ANY THIRD PARTY WITHOUT DELL'S EXPRESS WRITTEN CONSENT.

DELL CONFIDENTIAL/PROPRIETARY

Compal Electronics, Inc.

Title: DDRIII-SODIMM SLOT1

Size | Document Number: LA-7781 | Rev: 1.0

Date: Friday, February 24, 2012 | Sheet 12 of 61

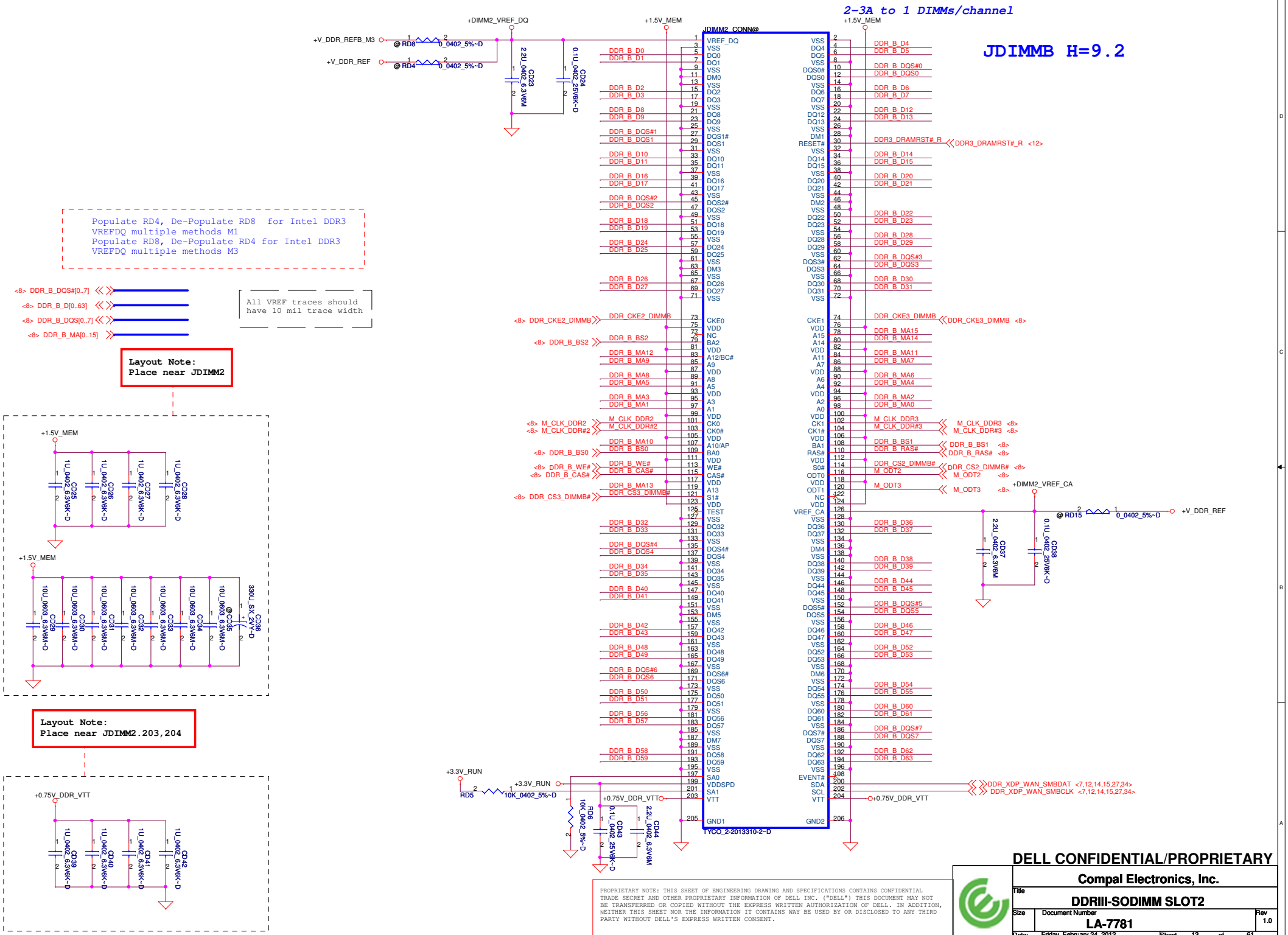

DELL CONFIDENTIAL/PROPRIETARY

PROPRIETARY NOTE: THIS SHEET OF ENGINEERING DRAWING AND SPECIFICATIONS CONTAINS CONFIDENTIAL TRADE SECRET AND OTHER PROPRIETARY INFORMATION OF DELL INC. ("DELL") THIS DOCUMENT MAY NOT BE TRANSFERRED OR COPIED WITHOUT THE EXPRESS WRITTEN AUTHORIZATION OF DELL. IN ADDITION, NEITHER THIS SHEET NOR THE INFORMATION IT CONTAINS WAY BE USED BY OR DISCLOSED TO ANY THIRD PARTY WITHOUT DELL'S EXPRESS WRITTEN CONSENT.

Compal Electronics, Inc.

Title: DDRIII-SODIMM SLOT2

Size | Document Number: LA-7781 | Rev: 1.0

Date: Friday, February 24, 2012 | Sheet 13 of 61

CMOS_CLR1	CMOS setting
Shunt	Clear CMOS
Open	Keep CMOS

ME_CLR1	TPM setting
Shunt	Clear ME RTC Registers
Open	Keep ME RTC Registers

PCH_AZ_SYNC is sampled at the rising edge of RSMRST# pin. So signal should be PU to the ALWAYS rail.

On Die PLL VR is supplied by 1.5V when sampled high, 1.8 V when sampled low

INTVRMEN- Integrated SUS 1.1V VRM Enable
High - Enable Internal VRs
Low - Enable External VRs

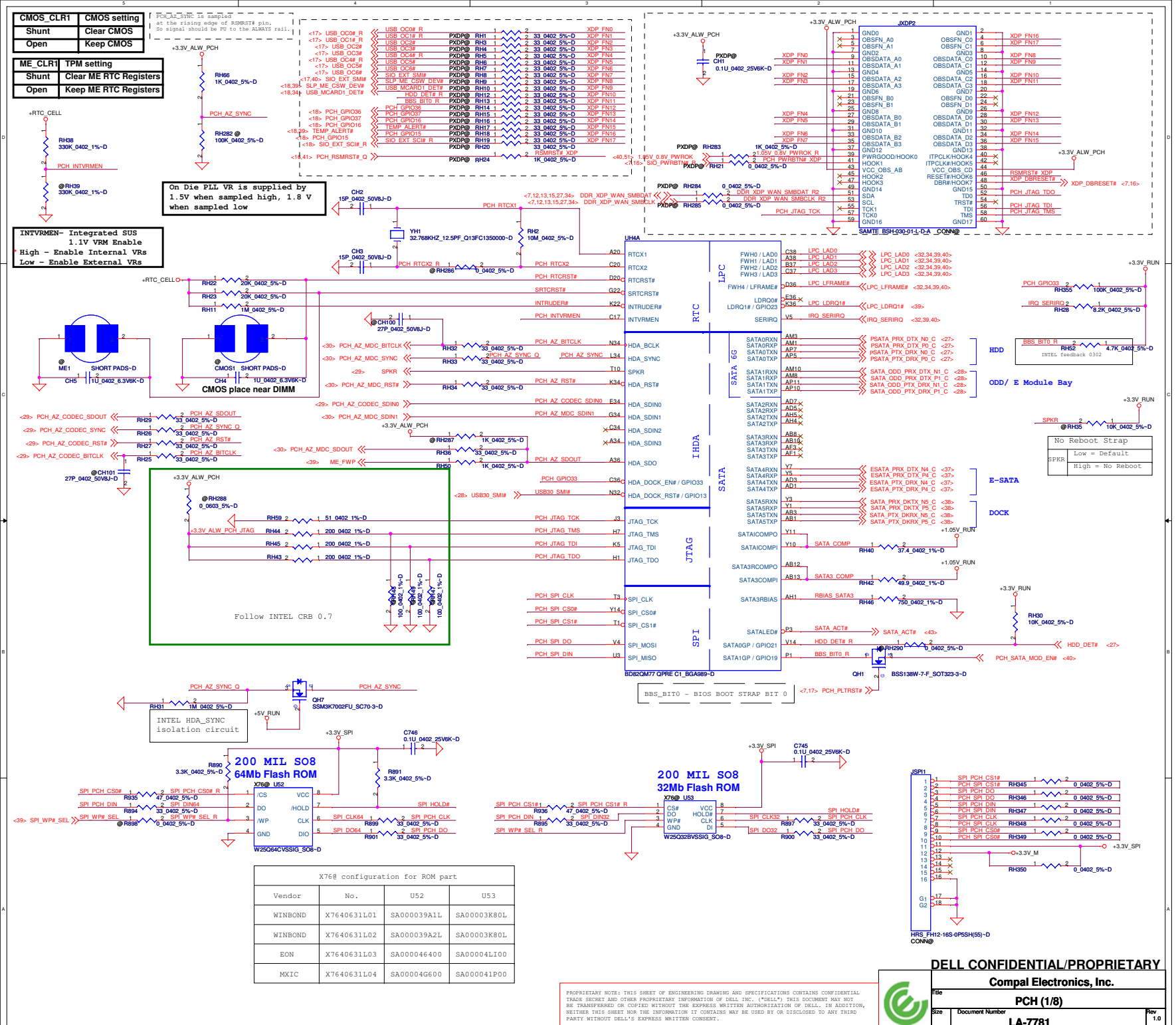

X76@ configuration for ROM part			
Vendor	No.	U52	U53
WINBOND	X7640631L01	SA000039A1L	SA00003K80L
WINBOND	X7640631L02	SA000039A2L	SA00003K80L
EON	X7640631L03	SA000046400	SA00004LI00
MXIC	X7640631L04	SA00004G600	SA000041P00

PROPRIETARY NOTE: THIS SHEET OF ENGINEERING DRAWING AND SPECIFICATIONS CONTAINS CONFIDENTIAL TRADE SECRET AND OTHER PROPRIETARY INFORMATION OF DELL INC. ("DELL") THIS DOCUMENT MAY NOT BE TRANSFERRED OR COPIED WITHOUT THE EXPRESS WRITTEN AUTHORIZATION OF DELL. IN ADDITION, NEITHER THIS SHEET NOR THE INFORMATION IT CONTAINS MAY BE USED BY OR DISCLOSED TO ANY THIRD PARTY WITHOUT DELL'S EXPRESS WRITTEN CONSENT.

DELL CONFIDENTIAL/PROPRIETARY
Compal Electronics, Inc.
Title: PCH (1/8)
Size: Document Number: LA-7781 Rev: 1.0
Date: Friday, February 24, 2012 Sheet 14 of 61

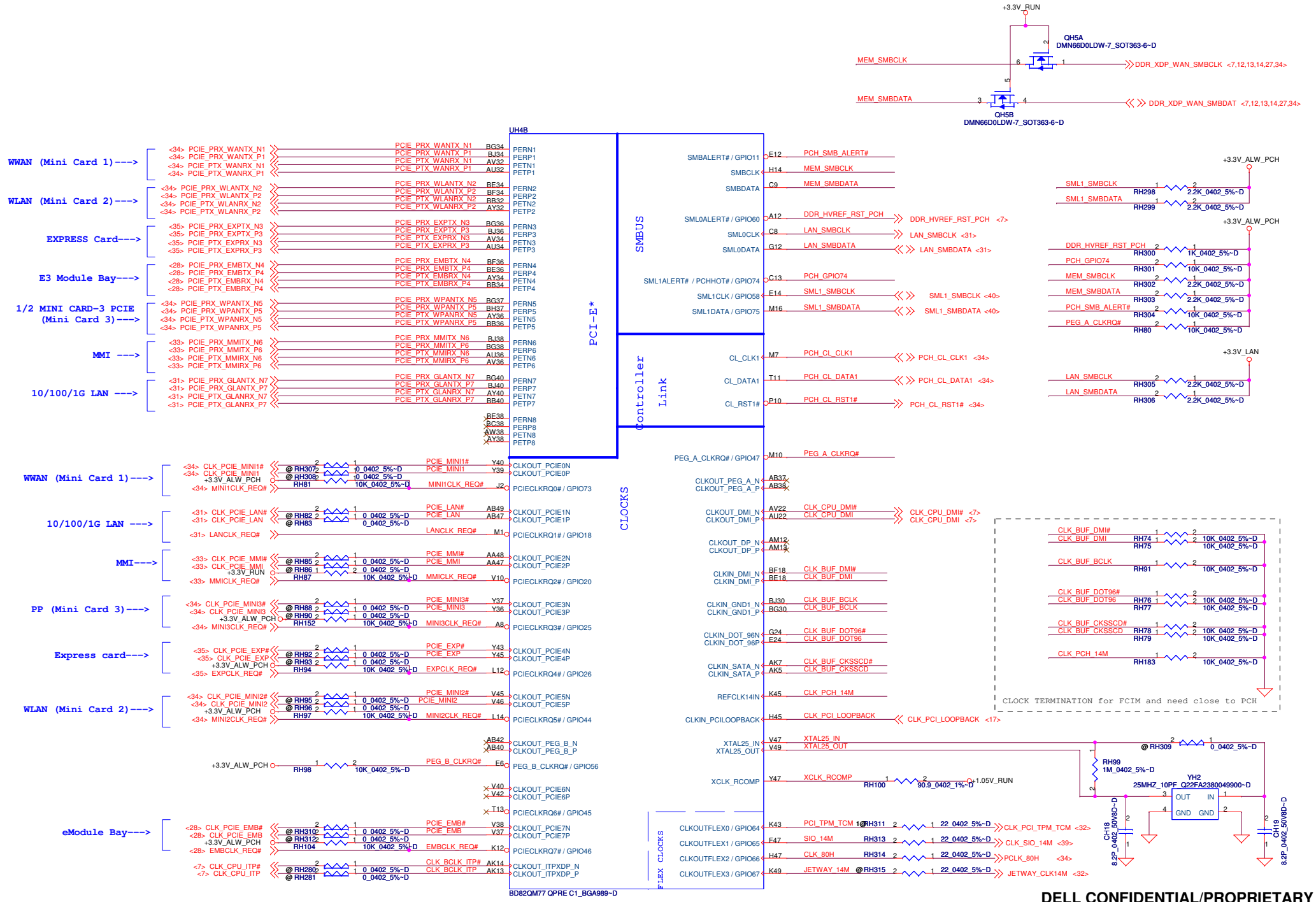

PROPRIETARY NOTE: THIS SHEET OF ENGINEERING DRAWING AND SPECIFICATIONS CONTAINS CONFIDENTIAL TRADE SECRET AND OTHER PROPRIETARY INFORMATION OF DELL INC. ("DELL") THIS DOCUMENT MAY NOT BE TRANSFERRED OR COPIED WITHOUT THE EXPRESS WRITTEN AUTHORIZATION OF DELL. IN ADDITION, NEITHER THIS SHEET NOR THE INFORMATION IT CONTAINS WAY BE USED BY OR DISCLOSED TO ANY THIRD PARTY WITHOUT DELL'S EXPRESS WRITTEN CONSENT.

DELL CONFIDENTIAL/PROPRIETARY

Compal Electronics, Inc.

Title	PCH (2/8)
Size	
Document Number	LA-7781
Rev	1.0
Date:	Friday, February 24, 2012
Sheet	15 of 61

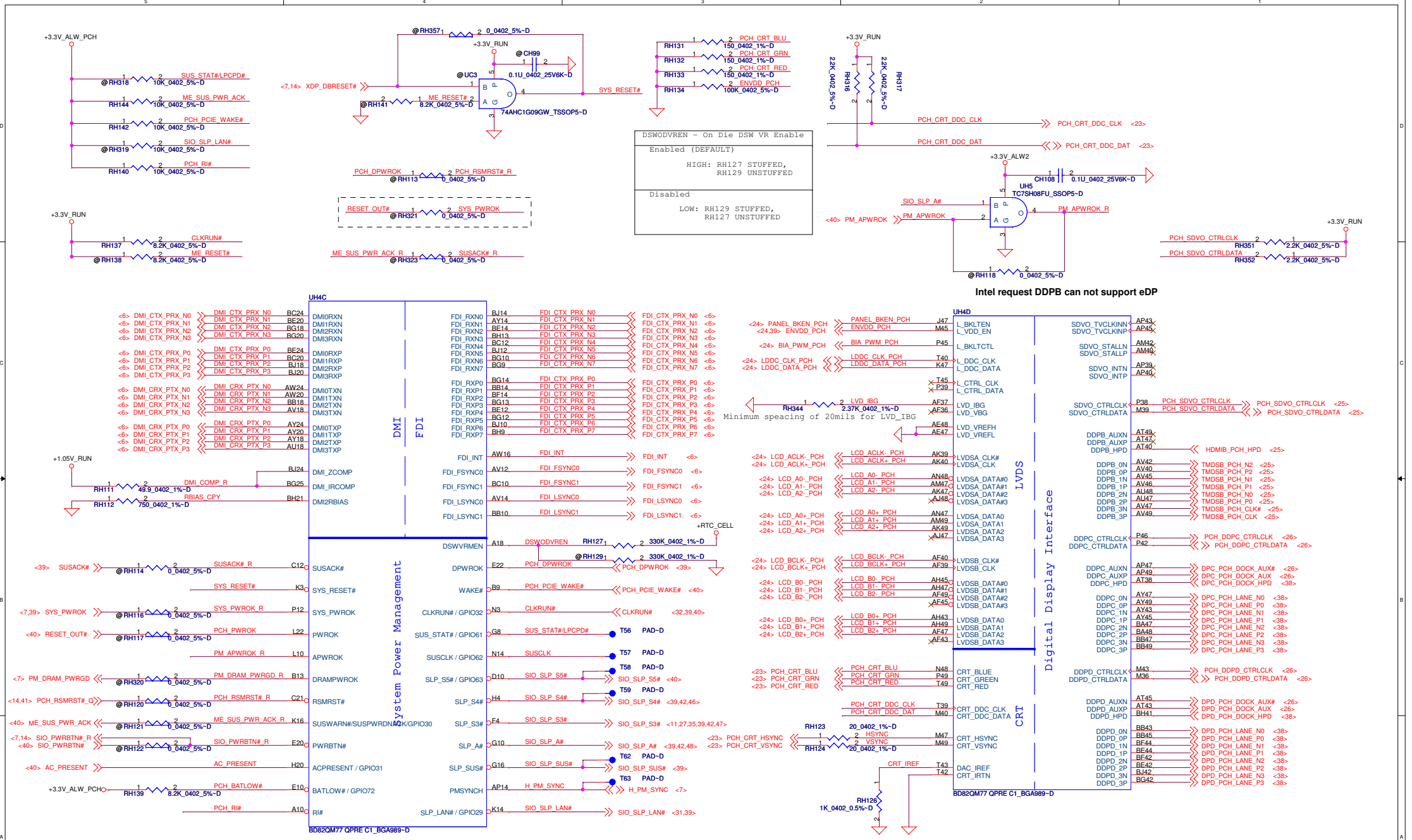

PROPRIETARY NOTE: THIS SHEET OF ENGINEERING DRAWING AND SPECIFICATIONS CONTAINS CONFIDENTIAL TRADE SECRET AND OTHER PROPRIETARY INFORMATION OF DELL INC. ("DELL") THIS DOCUMENT MAY NOT BE TRANSFERRED OR COPIED WITHOUT THE EXPRESS WRITTEN AUTHORIZATION OF DELL. IN ADDITION, NEITHER THIS SHEET NOR THE INFORMATION IT CONTAINS WAY BE USED BY OR DISCLOSED TO ANY THIRD PARTY WITHOUT DELL'S EXPRESS WRITTEN CONSENT.

DELL CONFIDENTIAL/PROPRIETARY

Compal Electronics, Inc.

Title: **PCH (3/8)**

Size | Document Number: **LA-7781** | Rev: 1.0

Date: Friday, February 24, 2012 | Sheet 16 of 61

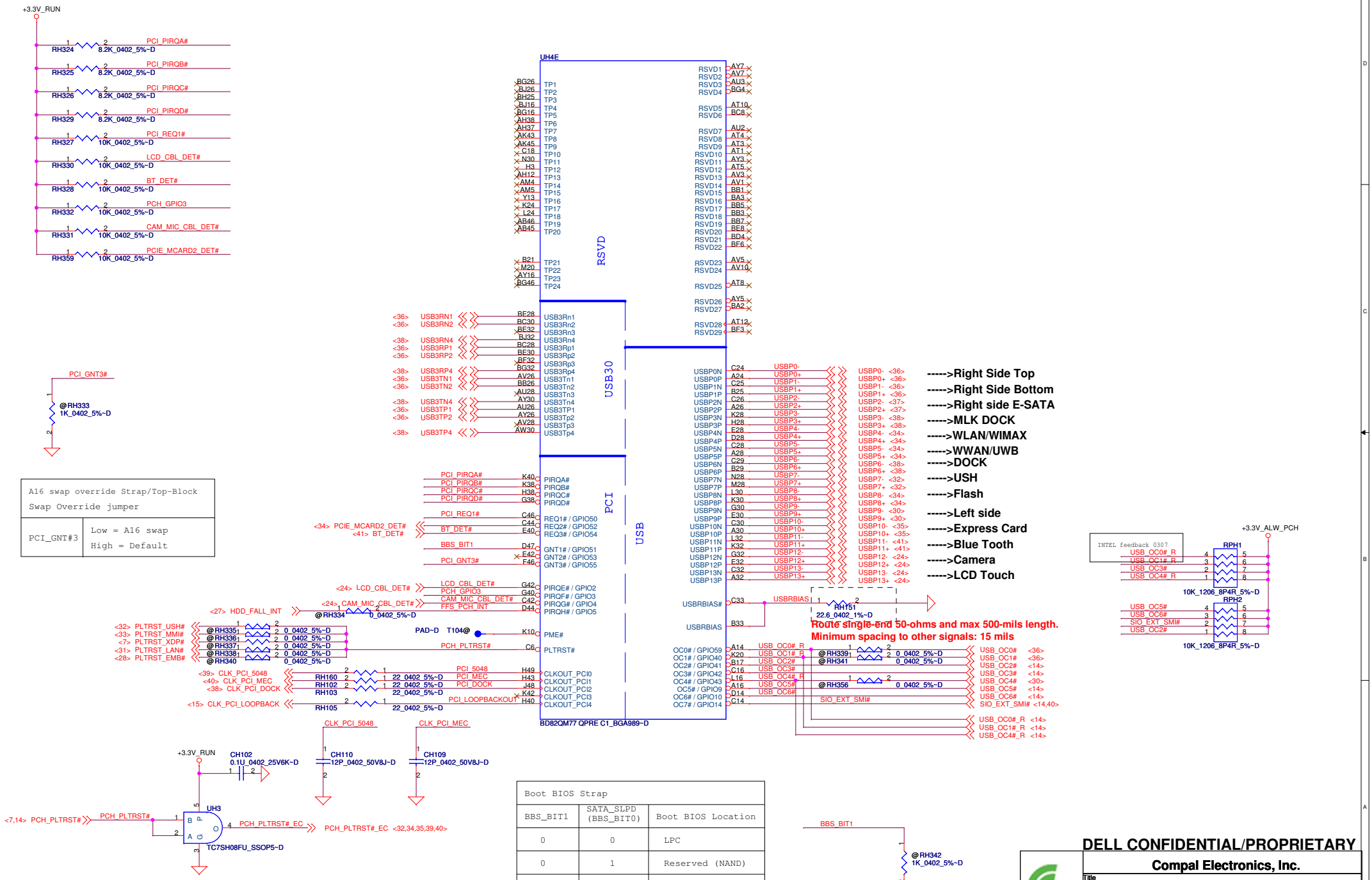

Boot BIOS Strap		
BBS_BIT1	SATA_SLPD (BBS_BIT0)	Boot BIOS Location
0	0	LPC
0	1	Reserved (NAND)
1	0	PCI
1	1	SPI

DELL CONFIDENTIAL/PROPRIETARY

Compal Electronics, Inc.

Title: PCH (4/8)

Size | Document Number: LA-7781 | Rev 1.0

Date: Friday, February 24, 2012 | Sheet 17 of 61

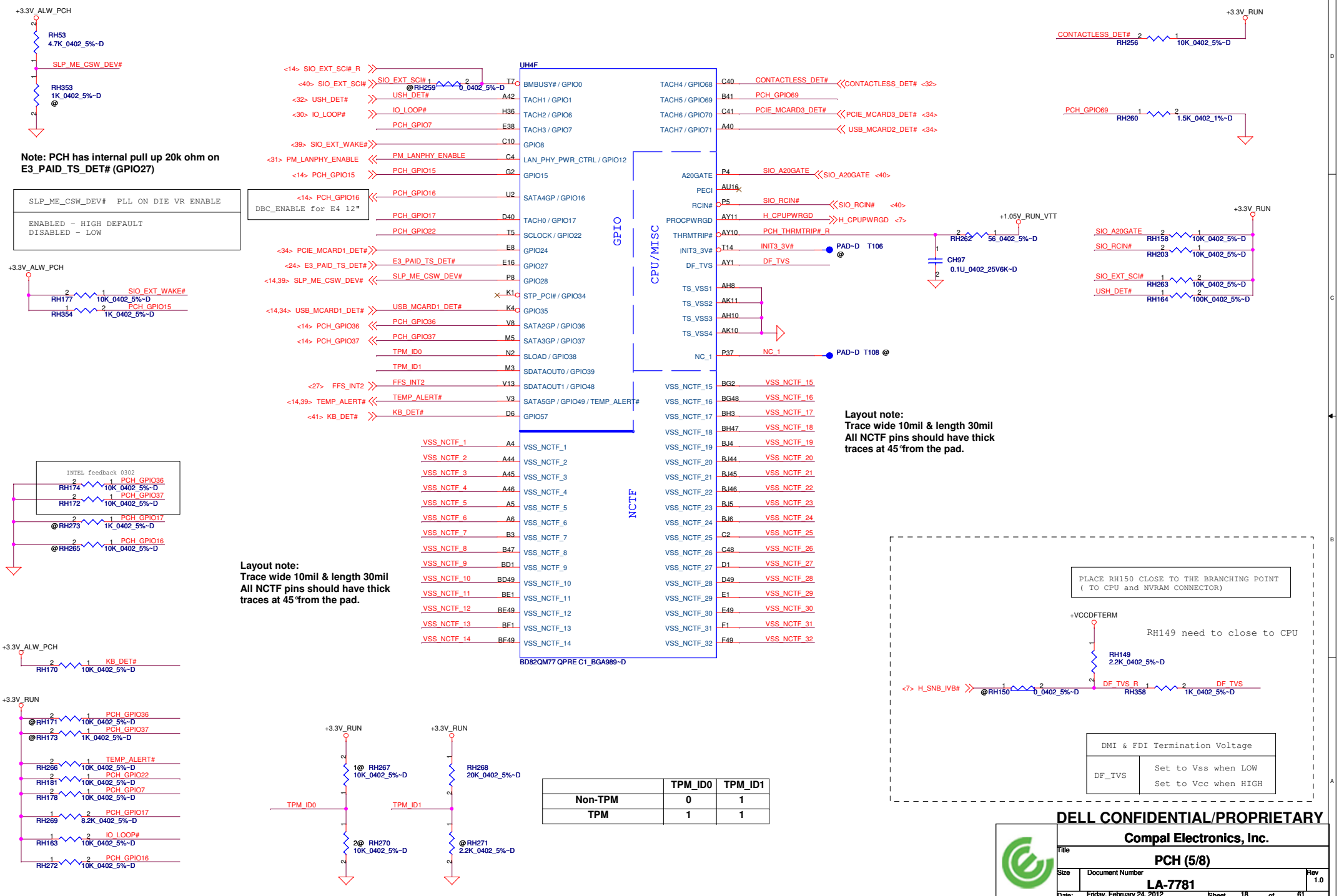

	TPM_ID0	TPM_ID1
Non-TPM	0	1
TPM	1	1

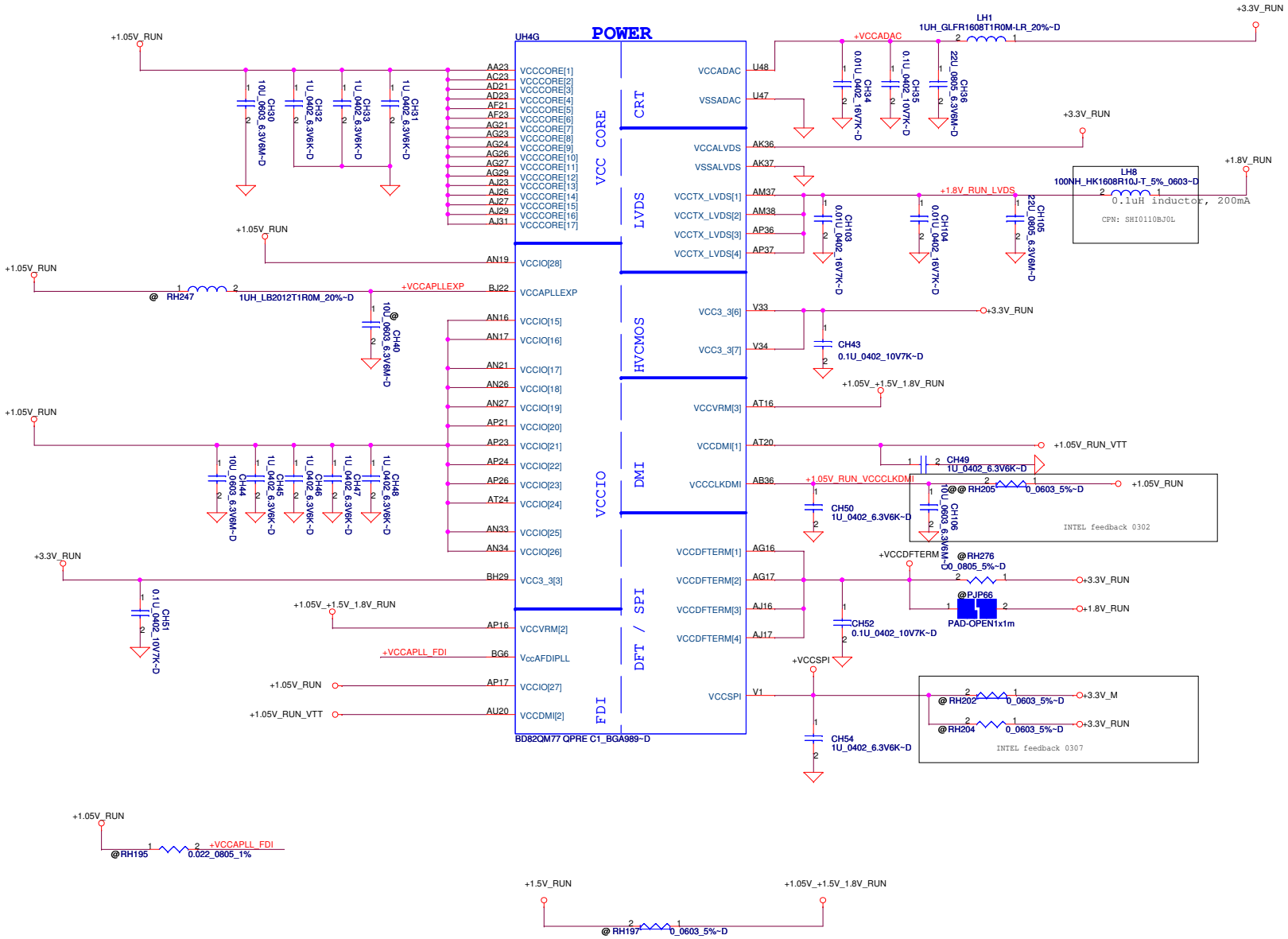

PCH Power Rail Table

Voltage Rail	Voltage	S0 Iccmax Current (A)
V_PROC_IO	1.05	0.001
V5REF	5	0.001
V5REF_Sus	5	0.001
Vcc3_3	3.3	0.228
VccADAC3	3.3	0.063
VccADPLLA	1.05	0.08
VccADPLLB	1.05	0.08
VccCore	1.05	1.7
VccDMI	1.1	0.047
VccIO	1.05	3.711
VccASW	1.05	0.903
VccSPI	3.3	0.01
VccDSW3_3	3.3	0.001
VCCDFTERM	1.8	0.002
VccRTC	3.3	2 (mA)
VccSus3_3	3.3	0.095
VccSusHDA	3.3	0.01
VccVRM	1.5	0.167
VccClkDMI	1.05	0.07
VccSSC	1.05	0.095
VccDIFFCLKN	1.05	0.055
VccALVDS	3.3	0.001
VccTX_LVDS	1.8	0.04

PROPRIETARY NOTE: THIS SHEET OF ENGINEERING DRAWING AND SPECIFICATIONS CONTAINS CONFIDENTIAL TRADE SECRET AND OTHER PROPRIETARY INFORMATION OF DELL INC. ("DELL") THIS DOCUMENT MAY NOT BE TRANSFERRED OR COPIED WITHOUT THE EXPRESS WRITTEN AUTHORIZATION OF DELL. IN ADDITION, NEITHER THIS SHEET NOR THE INFORMATION IT CONTAINS WAY BE USED BY OR DISCLOSED TO ANY THIRD PARTY WITHOUT DELL'S EXPRESS WRITTEN CONSENT.

DELL CONFIDENTIAL/PROPRIETARY

Compal Electronics, Inc.

Title: PCH (6/8)

Size | Document Number: LA-7781 | Rev: 1.0

Date: Friday, February 24, 2012 | Sheet 19 of 61

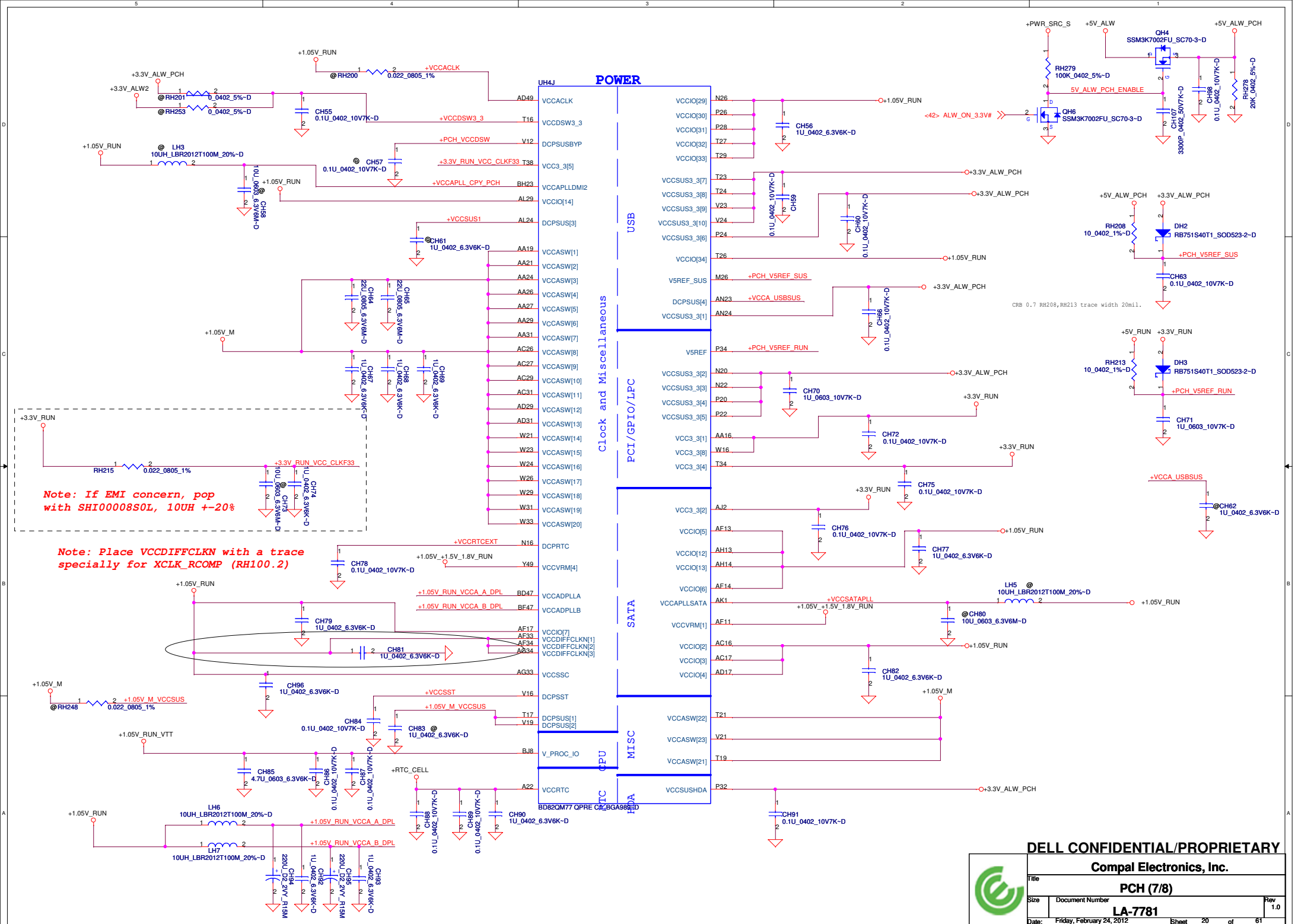
POWER
UH4J
Clock and Miscellaneous
USB
PCI/GPIO/LPC
SATA
MISC
CPU
HDA
BD82QM77 QPRE CAL,BGA989,SD
Note: If EMI concern, pop with SHI00008S0L, 10UH +-20%
Note: Place VCCDIFFCLKN with a trace specially for XCLK_RCOMP (RH100.2)
CRB 0.7 RH208,RH213 trace width 20mil.
DELL CONFIDENTIAL/PROPRIETARY
Compal Electronics, Inc.
Title
PCH (7/8)
Size
Document Number
LA-7781
Rev
1.0
Date: Friday, February 24, 2012
Sheet 20 of 61

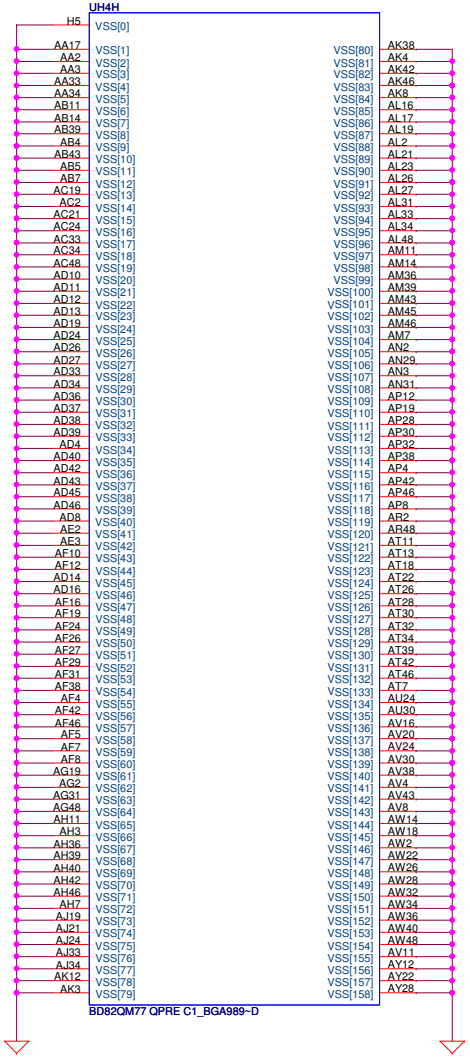

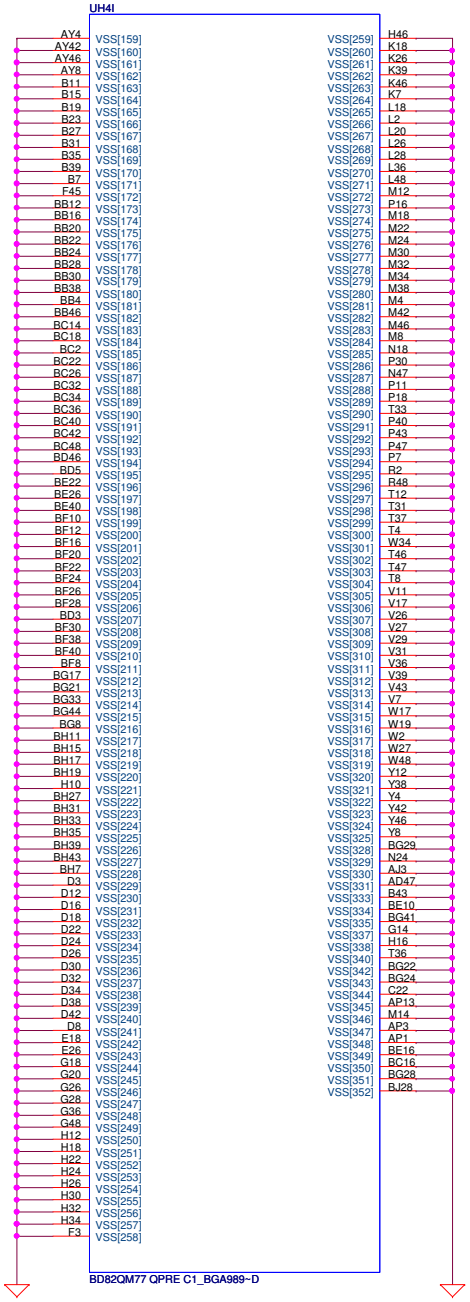

PROPRIETARY NOTE: THIS SHEET OF ENGINEERING DRAWING AND SPECIFICATIONS CONTAINS CONFIDENTIAL TRADE SECRET AND OTHER PROPRIETARY INFORMATION OF DELL INC. ("DELL") THIS DOCUMENT MAY NOT BE TRANSFERRED OR COPIED WITHOUT THE EXPRESS WRITTEN AUTHORIZATION OF DELL. IN ADDITION, NEITHER THIS SHEET NOR THE INFORMATION IT CONTAINS WAY BE USED BY OR DISCLOSED TO ANY THIRD PARTY WITHOUT DELL'S EXPRESS WRITTEN CONSENT.

DELL CONFIDENTIAL/PROPRIETARY

Compal Electronics, Inc.

Title	PCH (8/8)	
Size	Document Number: LA-7781	Rev 1.0
Date: Friday, February 24, 2012	Sheet 21 of 61	

Place under CPU
Place C266 close to the Q12 as possible

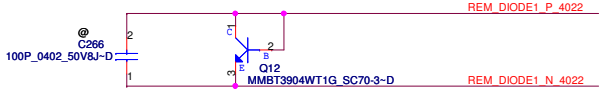

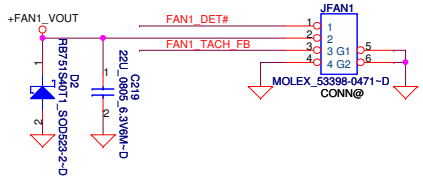

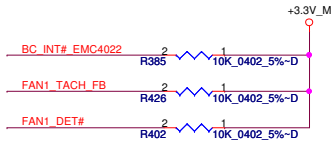

(1) DP2/DN2 for SODIMM on Q14, place Q14 close to SODIMM and C272 close to Q14
(2) DP4/DN4 for Skin on Q13, place Q13 close to Vcore VR choke.

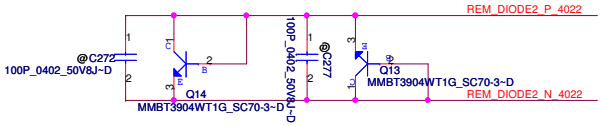

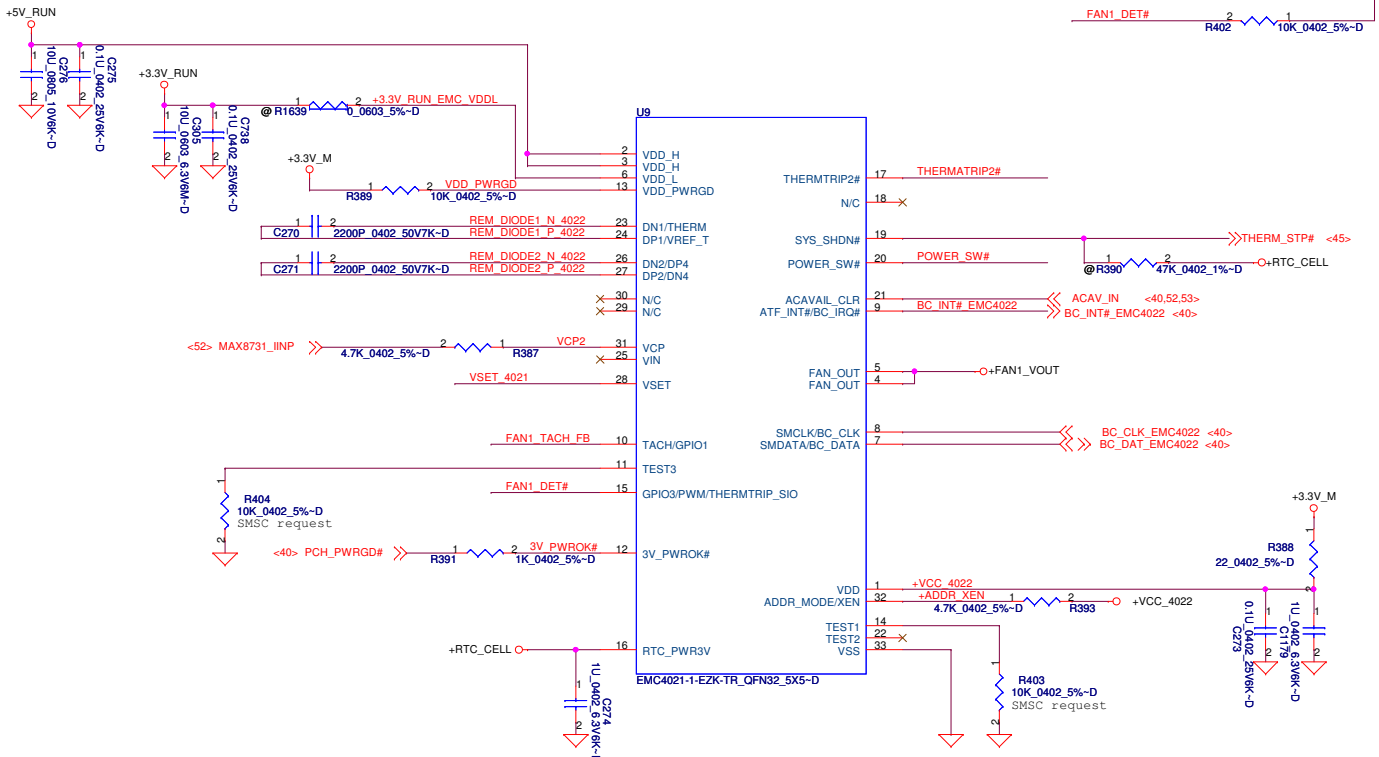

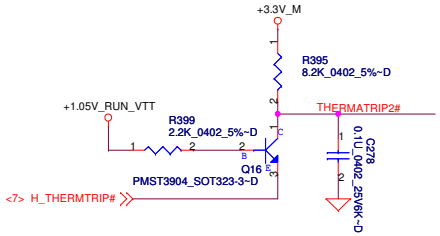

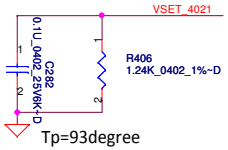

Tp=93degree

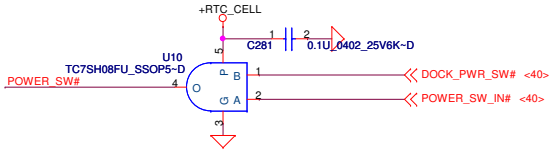

DELL CONFIDENTIAL/PROPRIETARY

PROPRIETARY NOTE: THIS SHEET OF ENGINEERING DRAWING AND SPECIFICATIONS CONTAINS CONFIDENTIAL TRADE SECRET AND OTHER PROPRIETARY INFORMATION OF DELL INC. ("DELL") THIS DOCUMENT MAY NOT BE TRANSFERRED OR COPIED WITHOUT THE EXPRESS WRITTEN AUTHORIZATION OF DELL. IN ADDITION, NEITHER THIS SHEET NOR THE INFORMATION IT CONTAINS WAY BE USED BY OR DISCLOSED TO ANY THIRD PARTY WITHOUT DELL'S EXPRESS WRITTEN CONSENT.

Compal Electronics, Inc.		
Title: FAN & Thermal Sensor		
Size	Document Number: LA-7781	Rev 1.0
Date: Friday, February 24, 2012	Sheet 22 of 61	

SW for MB/DOCK

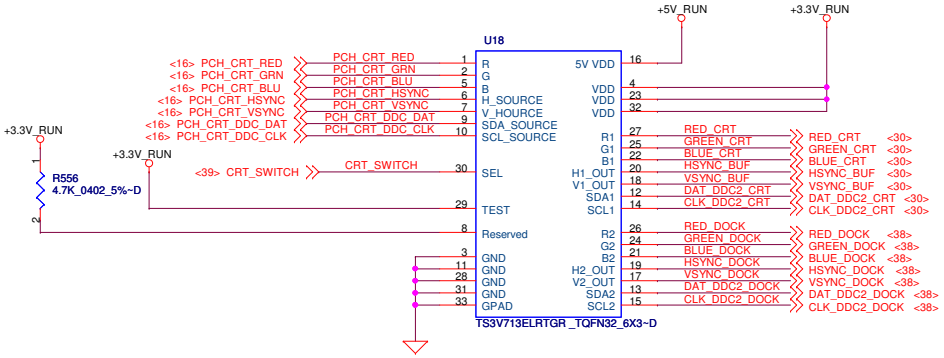

SEL1/SEL2	Chanel	Source
0	A=B1	MB
1	A=B2	APR/SPR

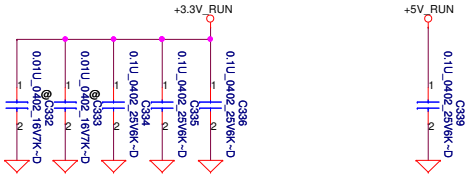

DELL CONFIDENTIAL/PROPRIETARY

Compal Electronics, Inc.		
Title: CRT/Video switch		
Size	Document Number: LA-7781	Rev 1.0
Date: Friday, February 24, 2012	Sheet 23 of 61	

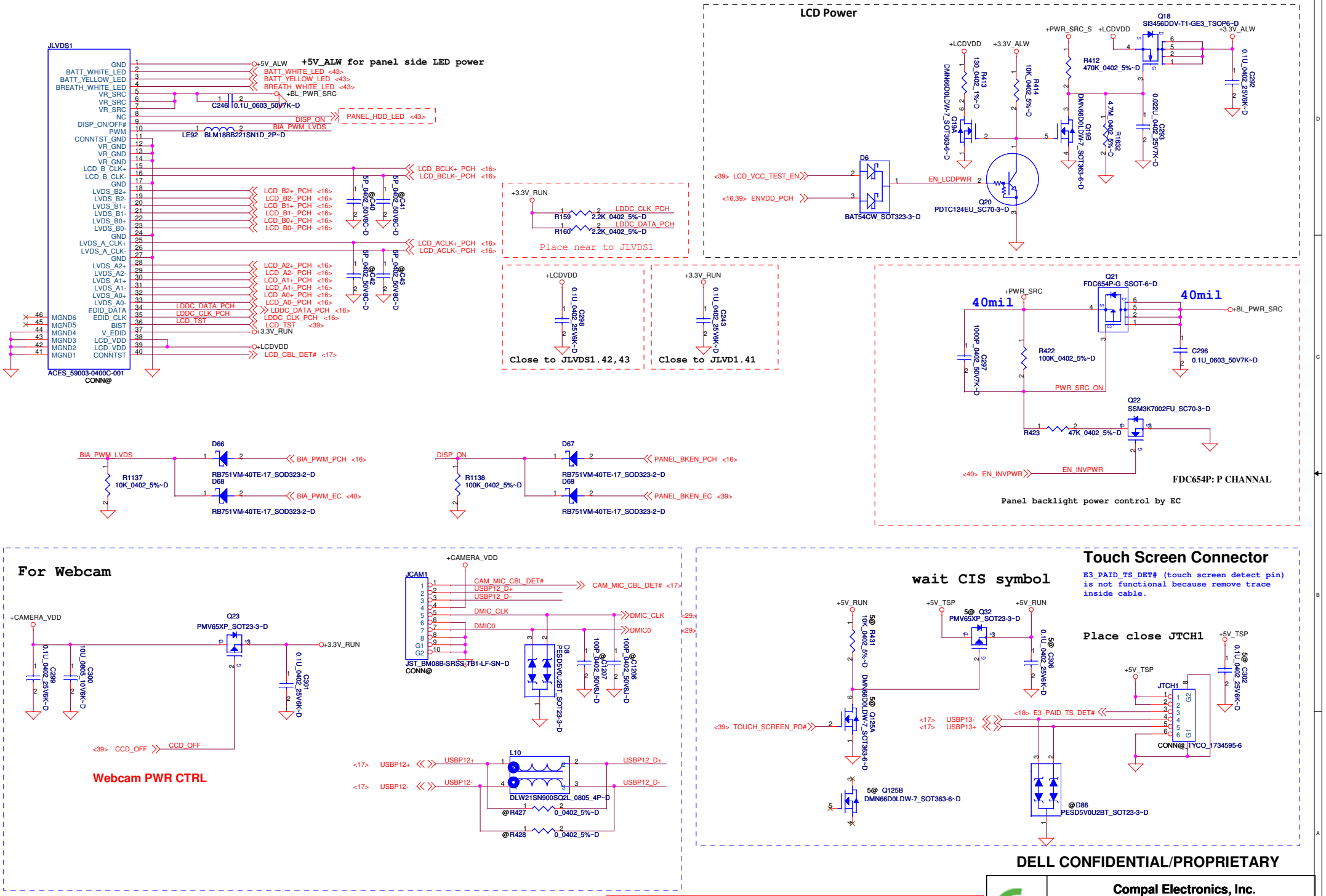

PROPRIETARY NOTE: THIS SHEET OF ENGINEERING DRAWING AND SPECIFICATIONS CONTAINS CONFIDENTIAL TRADE SECRET AND OTHER PROPRIETARY INFORMATION OF DELL INC. ("DELL") THIS DOCUMENT MAY NOT BE TRANSFERRED OR COPIED WITHOUT THE EXPRESS WRITTEN AUTHORIZATION OF DELL. IN ADDITION, NEITHER THIS SHEET NOR THE INFORMATION IT CONTAINS WAY BE USED BY OR DISCLOSED TO ANY THIRD PARTY WITHOUT DELL'S EXPRESS WRITTEN CONSENT.

Compal Electronics, Inc.	
Title	eDP & CAM &TS Conn
Size / Document Number	LA-7781
Rev	1.0
Date: Friday, February 24, 2012	Sheet 24 of 61

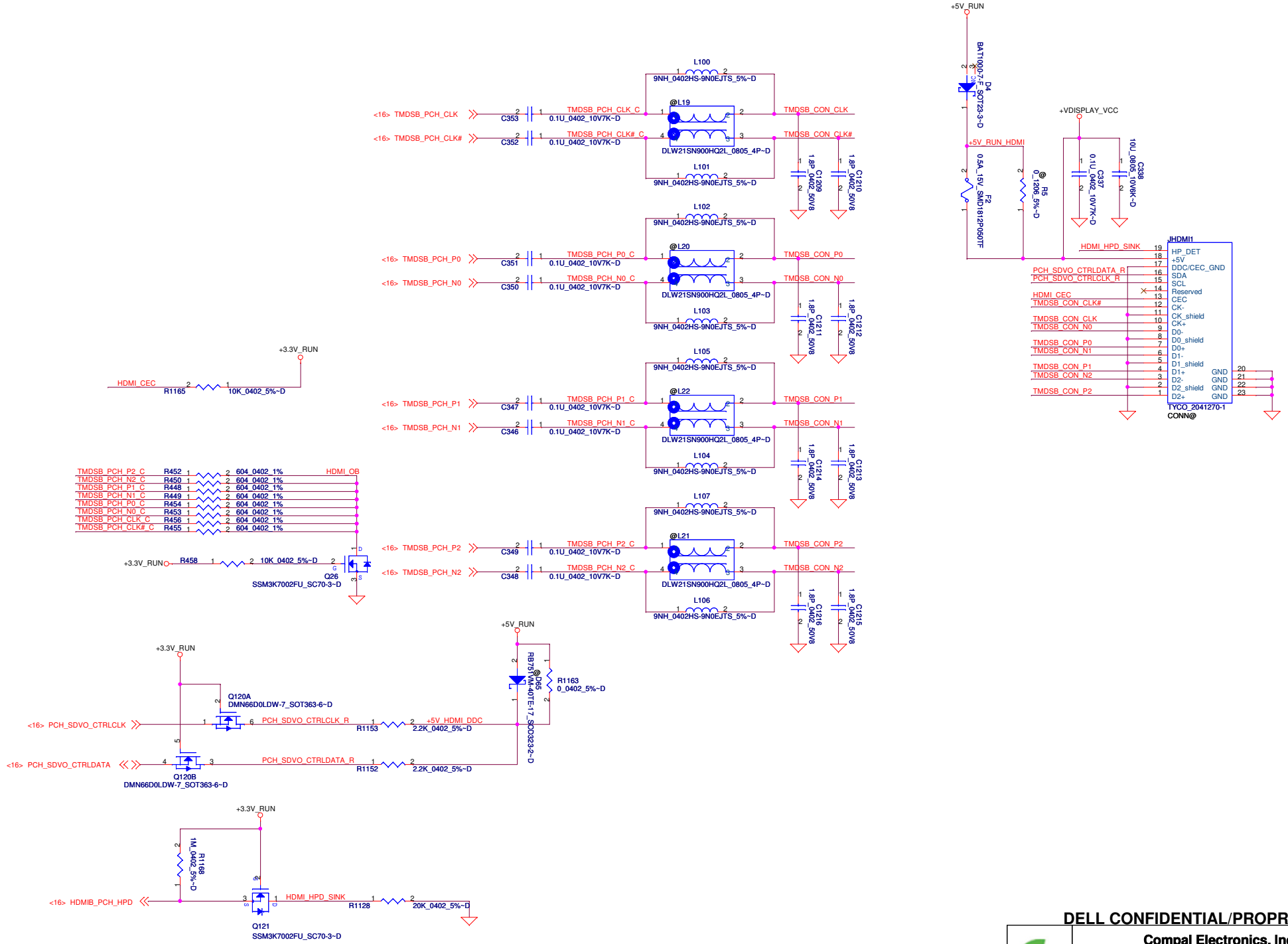

PROPRIETARY NOTE: THIS SHEET OF ENGINEERING DRAWING AND SPECIFICATIONS CONTAINS CONFIDENTIAL TRADE SECRET AND OTHER PROPRIETARY INFORMATION OF DELL INC. ("DELL") THIS DOCUMENT MAY NOT BE TRANSFERRED OR COPIED WITHOUT THE EXPRESS WRITTEN AUTHORIZATION OF DELL. IN ADDITION, NEITHER THIS SHEET NOR THE INFORMATION IT CONTAINS WAY BE USED BY OR DISCLOSED TO ANY THIRD PARTY WITHOUT DELL'S EXPRESS WRITTEN CONSENT.

DELL CONFIDENTIAL/PROPRIETARY

Compal Electronics, Inc.	
Title: HDMI port	
Size	Document Number: LA-7781 — Rev 1.0
Date: Friday, February 24, 2012	Sheet 25 of 61

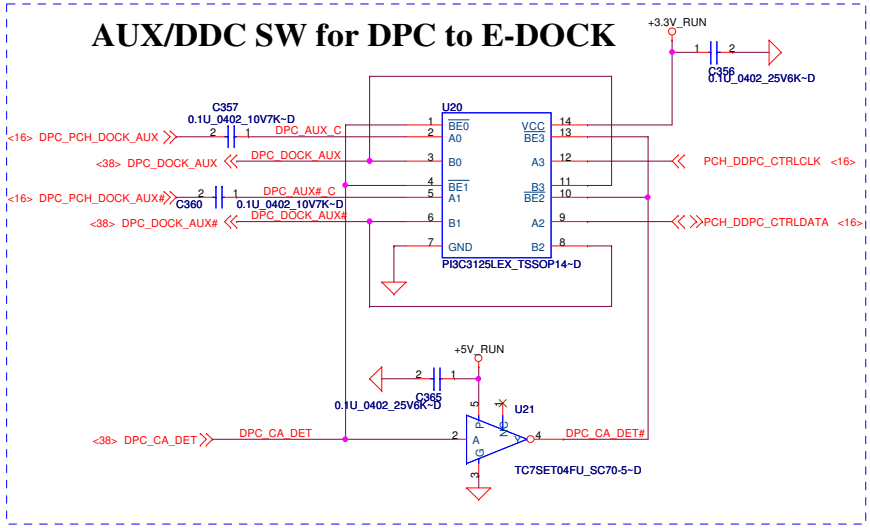

There is a new die for PI3C3125. Sample availabe on May.

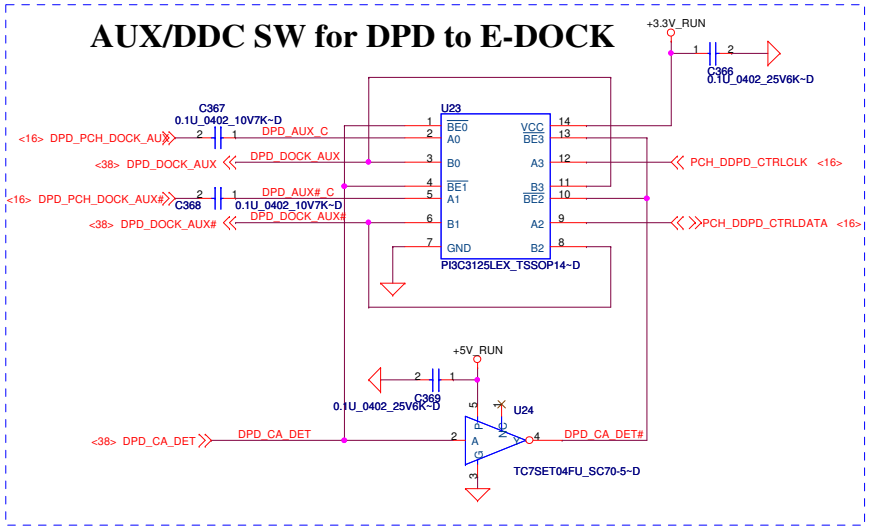

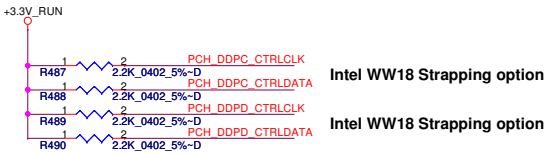

Intel WW18 Strapping option

Intel WW18 Strapping option

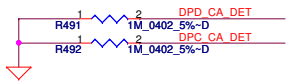

DELL CONFIDENTIAL/PROPRIETARY

PROPRIETARY NOTE: THIS SHEET OF ENGINEERING DRAWING AND SPECIFICATIONS CONTAINS CONFIDENTIAL TRADE SECRET AND OTHER PROPRIETARY INFORMATION OF DELL INC. ("DELL") THIS DOCUMENT MAY NOT BE TRANSFERRED OR COPIED WITHOUT THE EXPRESS WRITTEN AUTHORIZATION OF DELL. IN ADDITION, NEITHER THIS SHEET NOR THE INFORMATION IT CONTAINS WAY BE USED BY OR DISCLOSED TO ANY THIRD PARTY WITHOUT DELL'S EXPRESS WRITTEN CONSENT.

Compal Electronics, Inc.			
Title: DP AUX SW			
Size	Document Number: LA-7781		Rev 1.0
Date: Friday, February 24, 2012	Sheet 26 of 61		

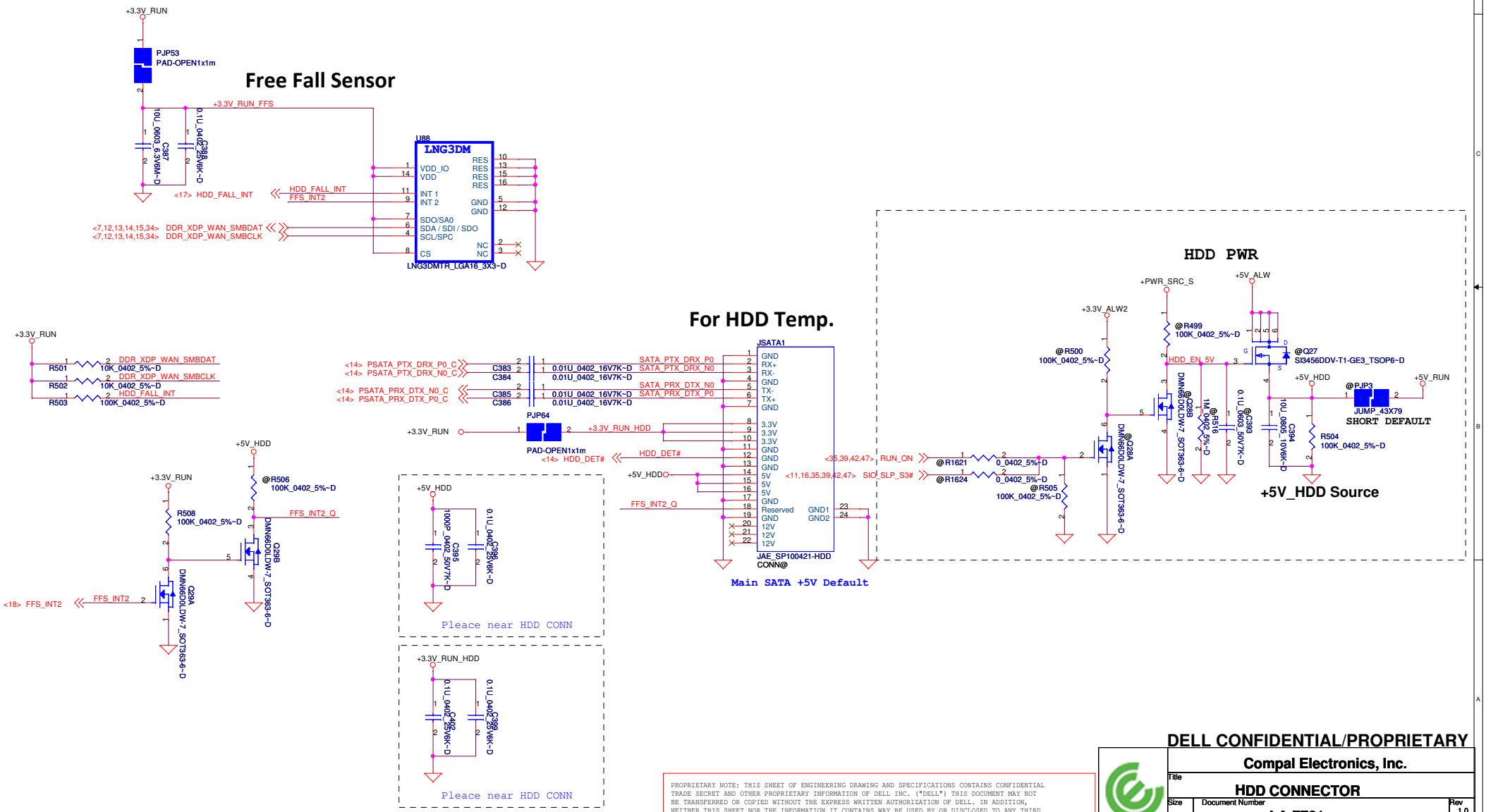

PROPRIETARY NOTE: THIS SHEET OF ENGINEERING DRAWING AND SPECIFICATIONS CONTAINS CONFIDENTIAL TRADE SECRET AND OTHER PROPRIETARY INFORMATION OF DELL INC. ("DELL") THIS DOCUMENT MAY NOT BE TRANSFERRED OR COPIED WITHOUT THE EXPRESS WRITTEN AUTHORIZATION OF DELL. IN ADDITION, NEITHER THIS SHEET NOR THE INFORMATION IT CONTAINS WAY BE USED BY OR DISCLOSED TO ANY THIRD PARTY WITHOUT DELL'S EXPRESS WRITTEN CONSENT.

DELL CONFIDENTIAL/PROPRIETARY

Compal Electronics, Inc.	
Title	HDD CONNECTOR
Size	Document Number: LA-7781
Rev	1.0
Date:	Friday, February 24, 2012
Sheet	27 of 61

For ODD

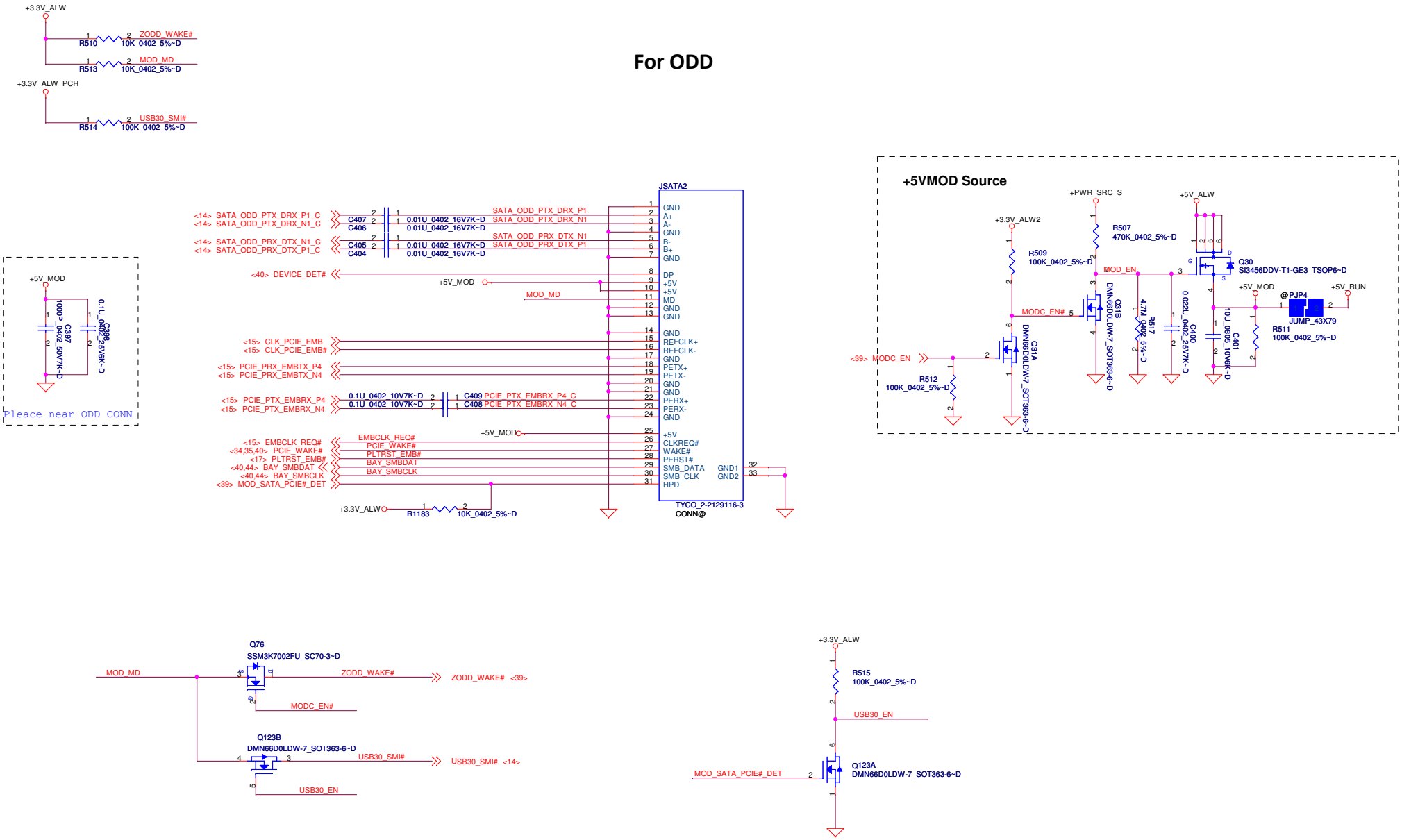

PROPRIETARY NOTE: THIS SHEET OF ENGINEERING DRAWING AND SPECIFICATIONS CONTAINS CONFIDENTIAL TRADE SECRET AND OTHER PROPRIETARY INFORMATION OF DELL INC. ("DELL") THIS DOCUMENT MAY NOT BE TRANSFERRED OR COPIED WITHOUT THE EXPRESS WRITTEN AUTHORIZATION OF DELL. IN ADDITION, NEITHER THIS SHEET NOR THE INFORMATION IT CONTAINS WAY BE USED BY OR DISCLOSED TO ANY THIRD PARTY WITHOUT DELL'S EXPRESS WRITTEN CONSENT.

DELL CONFIDENTIAL/PROPRIETARY

Compal Electronics, Inc.

Title: ODD CONNECTOR

Size | Document Number: LA-7781 | Rev: 1.0

Date: Friday, February 24, 2012 | Sheet 28 of 61

Internal Speakers Header

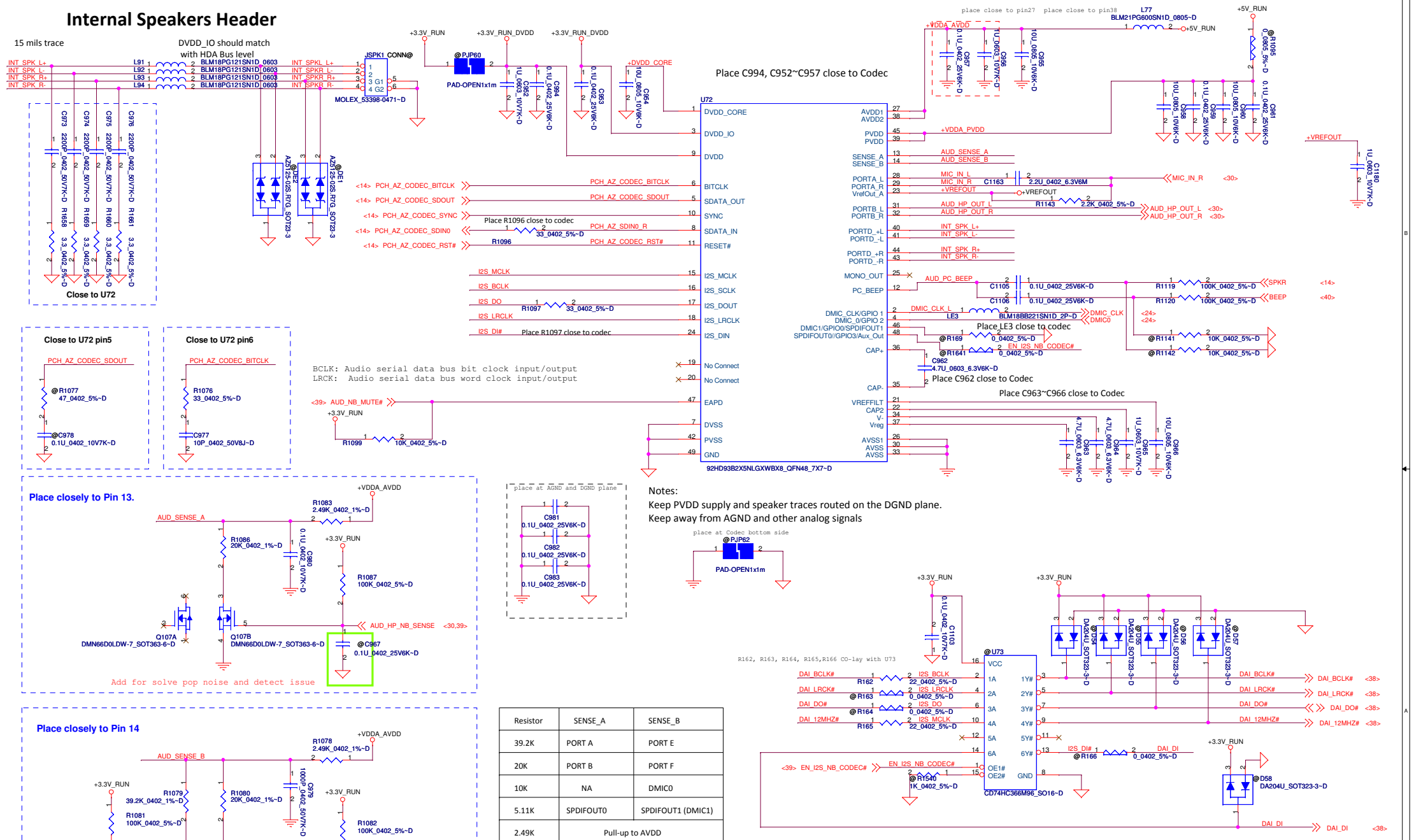

Notes:

Keep PVDD supply and speaker traces routed on the DGND plane.

Keep away from AGND and other analog signals

Resistor	SENSE_A	SENSE_B
39.2K	PORT A	PORT E
20K	PORT B	PORT F
10K	NA	DMIC0
5.11K	SPDIFOUT0	SPDIFOUT1 (DMIC1)
2.49K	Pull-up to AVDD	

PORT A	External MIC
PORT B	HeadPhone Out
PORT C	Dock Audio
PORT D	Internal SPK

PROPRIETARY NOTE: THIS SHEET OF ENGINEERING DRAWING AND SPECIFICATIONS CONTAINS CONFIDENTIAL TRADE SECRET AND OTHER PROPRIETARY INFORMATION OF DELL INC. ("DELL") THIS DOCUMENT MAY NOT BE TRANSFERRED OR COPIED WITHOUT THE EXPRESS WRITTEN AUTHORIZATION OF DELL. IN ADDITION, NEITHER THIS SHEET NOR THE INFORMATION IT CONTAINS WAY BE USED BY OR DISCLOSED TO ANY THIRD PARTY WITHOUT DELL'S EXPRESS WRITTEN CONSENT.

DELL CONFIDENTIAL/PROPRIETARY

Compal Electronics, Inc.

Title: Azalia (HD) Codec

Size | Document Number: LA-7781 | Rev: 1.0

Date: Friday, February 24, 2012 | Sheet 29 of 61

I/O board CONN.

Change to TYCO_2041300-2_60P-T and Horizonal reverse to SSI

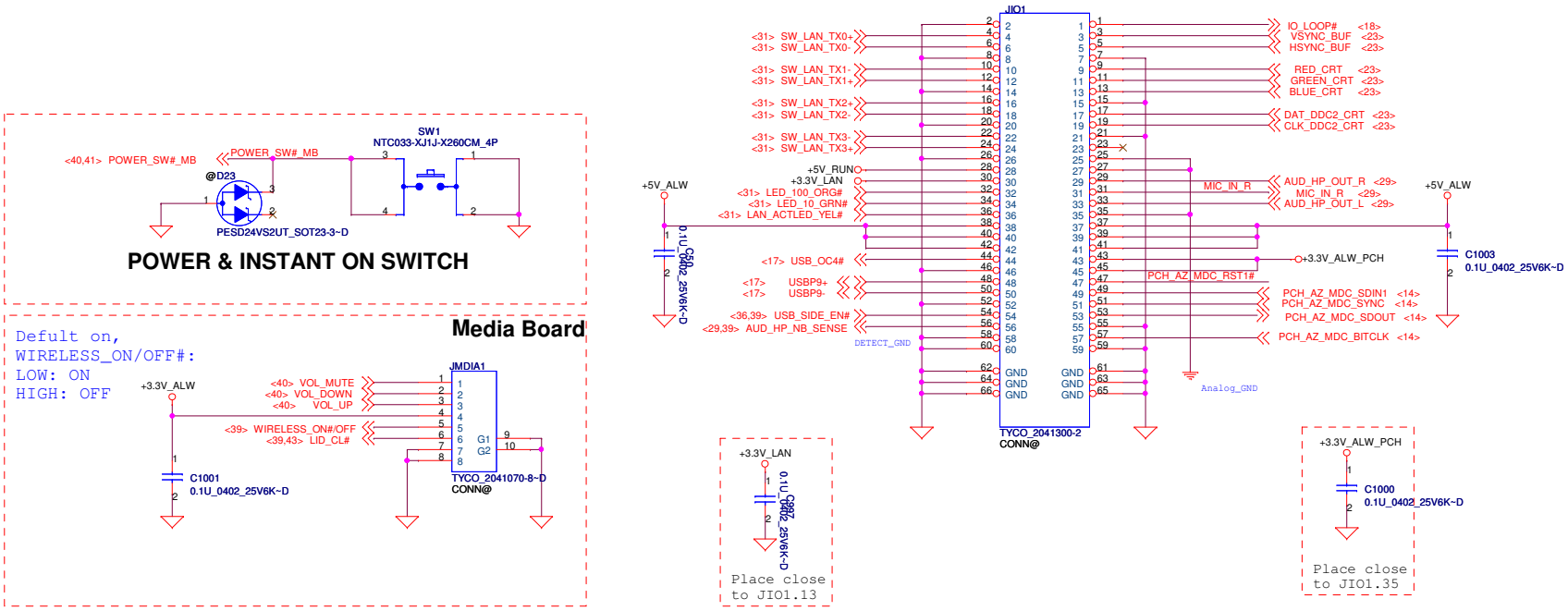

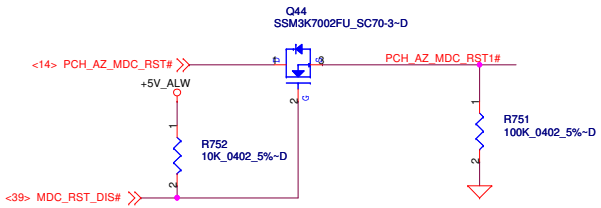

PROPRIETARY NOTE: THIS SHEET OF ENGINEERING DRAWING AND SPECIFICATIONS CONTAINS CONFIDENTIAL TRADE SECRET AND OTHER PROPRIETARY INFORMATION OF DELL INC. ("DELL") THIS DOCUMENT MAY NOT BE TRANSFERRED OR COPIED WITHOUT THE EXPRESS WRITTEN AUTHORIZATION OF DELL. IN ADDITION, NEITHER THIS SHEET NOR THE INFORMATION IT CONTAINS WAY BE USED BY OR DISCLOSED TO ANY THIRD PARTY WITHOUT DELL'S EXPRESS WRITTEN CONSENT.

DELL CONFIDENTIAL/PROPRIETARY

Compal Electronics, Inc.

Title: PWR SW/Sub-board Connector

Size | Document Number: LA-7781 | Rev 1.0

Date: Friday, February 24, 2012 | Sheet 30 of 61

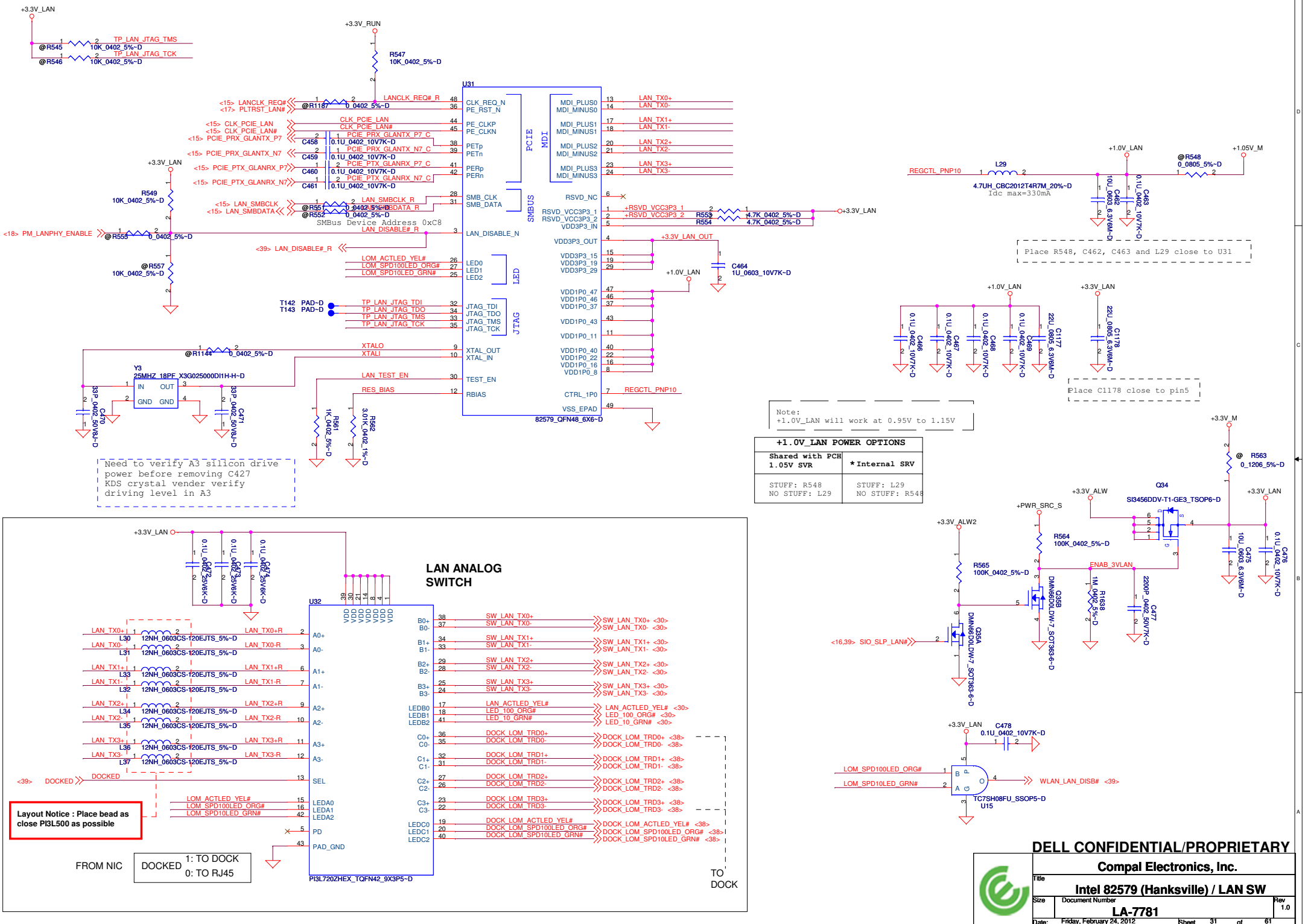
U31
82579_QFN48_6X6~D
PCIE
MDI
SMBUS
LED
JTAG
CLK_REQ_N
PE_RST_N
PE_CLKP
PE_CLKN
PETp
PETn
PERp
PERn
SMB_CLK
SMB_DATA
LAN_DISABLE_N
LED0
LED1
LED2
JTAG_TDI
JTAG_TDO
JTAG_TMS
JTAG_TCK
XTAL_OUT
XTAL_IN
TEST_EN
RBIAS
MDI_PLUS0
MDI_MINUS0
MDI_PLUS1
MDI_MINUS1
MDI_PLUS2
MDI_MINUS2
MDI_PLUS3
MDI_MINUS3
RSVD_NC
RSVD_VCC3P3_1
RSVD_VCC3P3_2
VDD3P3_IN
VDD3P3_OUT
VDD3P3_15
VDD3P3_19
VDD3P3_29
VDD1P0_47
VDD1P0_46
VDD1P0_37
VDD1P0_43
VDD1P0_11
VDD1P0_40
VDD1P0_22
VDD1P0_16
VDD1P0_8
CTRL_1P0
VSS_EPAD
LAN_TX0+
LAN_TX0-
LAN_TX1+
LAN_TX1-
LAN_TX2+
LAN_TX2-
LAN_TX3+
LAN_TX3-
+RSVD_VCC3P3_1
+RSVD_VCC3P3_2
+3.3V_LAN_OUT
REGCTL_PNP10
LANCLK_REQ# R
CLK_PCIE_LAN
CLK_PCIE_LAN#
PCIE_PRX_GLANTX_P7_C
PCIE_PRX_GLANTX_N7_C
PCIE_PTX_GLANRX_P7_C
PCIE_PTX_GLANRX_N7_C
LAN_SMBCLK_R
LAN_SMBDATA_R
SMBus Device Address 0xC8
LAN_DISABLE# R
LOM_ACTLED_YEL#
LOM_SPD100LED_ORG#
LOM_SPD10LED_GRN#
TP_LAN_JTAG_TDI
TP_LAN_JTAG_TDO
TP_LAN_JTAG_TMS
TP_LAN_JTAG_TCK
XTALO
XTALI
LAN_TEST_EN
RES_BIAS
+3.3V_LAN
+3.3V_RUN
TP_LAN_JTAG_TMS
TP_LAN_JTAG_TCK
R547 10K_0402_5%~D
R549 10K_0402_5%~D
R557 10K_0402_5%~D
R553 4.7K_0402_5%~D
R554 4.7K_0402_5%~D
C464 1U_0603_10V7K~D
Y3 25MHZ_18PF_X3G025000DI1H-H~D
C470 33P_0402_50V8J~D
C471 33P_0402_50V8J~D
R561 1K_0402_5%~D
R562 3.01K_0402_1%~D
Need to verify A3 silicon drive power before removing C427
KDS crystal vender verify driving level in A3
+1.0V_LAN
L29 4.7UH_CBC2012T4R7M_20%~D
Idc max=330mA
C462 10U_0603_6.3V6M~D
C463 0.1U_0402_10V7K~D
R548 0_0805_5%~D
+1.05V_M
Place R548, C462, C463 and L29 close to U31
C466 0.1U_0402_10V7K~D
C467 0.1U_0402_10V7K~D
C468 0.1U_0402_10V7K~D
C469 0.1U_0402_10V7K~D
C1177 22U_0805_6.3V6M~D
C1178 22U_0805_6.3V6M~D
+3.3V_LAN
Place C1178 close to pin5
Note:
+1.0V_LAN will work at 0.95V to 1.15V
+1.0V_LAN POWER OPTIONS
Shared with PCH 1.05V SVR
*Internal SRV
STUFF: R548
NO STUFF: L29
STUFF: L29
NO STUFF: R548
+3.3V_M
R563 0_1206_5%~D
+3.3V_ALW
Q34 SI3456DDV-T1-GE3_TSOP6~D
+3.3V_LAN
+PWR_SRC_S
+3.3V_ALW2
R564 100K_0402_5%~D
R565 100K_0402_5%~D
ENAB_3VLAN
Q35B DMN66D0LDW-7_SOT363-6~D
Q35A DMN66D0LDW-7_SOT363-6~D
R1638 1M_0402_5%~D
2200P_0402_50V7K~D
C477
C475 10U_0603_6.3V6M~D
C476 0.1U_0402_10V7K~D
<16,39> SIO_SLP_LAN#
+3.3V_LAN
C478 0.1U_0402_10V7K~D
LOM_SPD100LED_ORG#
LOM_SPD10LED_GRN#
WLAN_LAN_DISB# <39>
TC7SH08FU_SSOP5~D
U15
LAN ANALOG SWITCH
U32
PI3L720ZHEX_TQFN42_9X3P5~D
A0+
A0-
A1+
A1-
A2+
A2-
A3+
A3-
SEL
LEDA0
LEDA1
LEDA2
PD
PAD_GND
B0+
B0-
B1+
B1-
B2+
B2-
B3+
B3-
C0+
C0-
C1+
C1-
C2+
C2-
C3+
C3-
LEDC0
LEDC1
LEDC2
SW_LAN_TX0+ <30>
SW_LAN_TX0- <30>
SW_LAN_TX1+ <30>
SW_LAN_TX1- <30>
SW_LAN_TX2+ <30>
SW_LAN_TX2- <30>
SW_LAN_TX3+ <30>
SW_LAN_TX3- <30>
LAN_ACTLED_YEL# <30>
LED_100_ORG# <30>
LED_10_GRN# <30>
DOCK_LOM_TRD0+ <38>
DOCK_LOM_TRD0- <38>
DOCK_LOM_TRD1+ <38>
DOCK_LOM_TRD1- <38>
DOCK_LOM_TRD2+ <38>
DOCK_LOM_TRD2- <38>
DOCK_LOM_TRD3+ <38>
DOCK_LOM_TRD3- <38>
DOCK_LOM_ACTLED_YEL# <38>
DOCK_LOM_SPD100LED_ORG# <38>
DOCK_LOM_SPD10LED_GRN# <38>
TO DOCK
<39> DOCKED
Layout Notice : Place bead as close PI3L500 as possible
FROM NIC
DOCKED 1: TO DOCK 0: TO RJ45
DELL CONFIDENTIAL/PROPRIETARY
Compal Electronics, Inc.
Title
Intel 82579 (Hanksville) / LAN SW
Size
Document Number
LA-7781
Rev 1.0
Date: Friday, February 24, 2012
Sheet 31 of 61

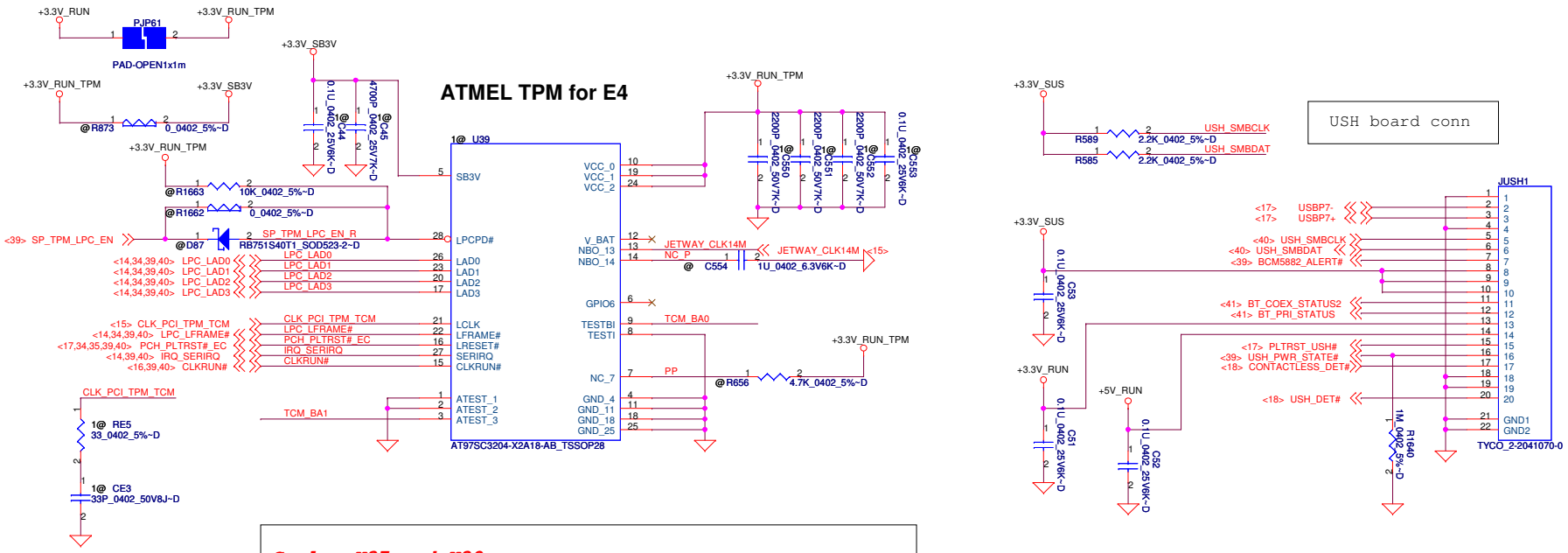

DELL CONFIDENTIAL/PROPRIETARY

PROPRIETARY NOTE: THIS SHEET OF ENGINEERING DRAWING AND SPECIFICATIONS CONTAINS CONFIDENTIAL TRADE SECRET AND OTHER PROPRIETARY INFORMATION OF DELL INC. ("DELL") THIS DOCUMENT MAY NOT BE TRANSFERRED OR COPIED WITHOUT THE EXPRESS WRITTEN AUTHORIZATION OF DELL. IN ADDITION, NEITHER THIS SHEET NOR THE INFORMATION IT CONTAINS WAY BE USED BY OR DISCLOSED TO ANY THIRD PARTY WITHOUT DELL'S EXPRESS WRITTEN CONSENT.

Compal Electronics, Inc.
Title: TPM/TCM
Size
Document Number: LA-7781
Rev: 1.0
Date: Friday, February 24, 2012
Sheet 32 of 61

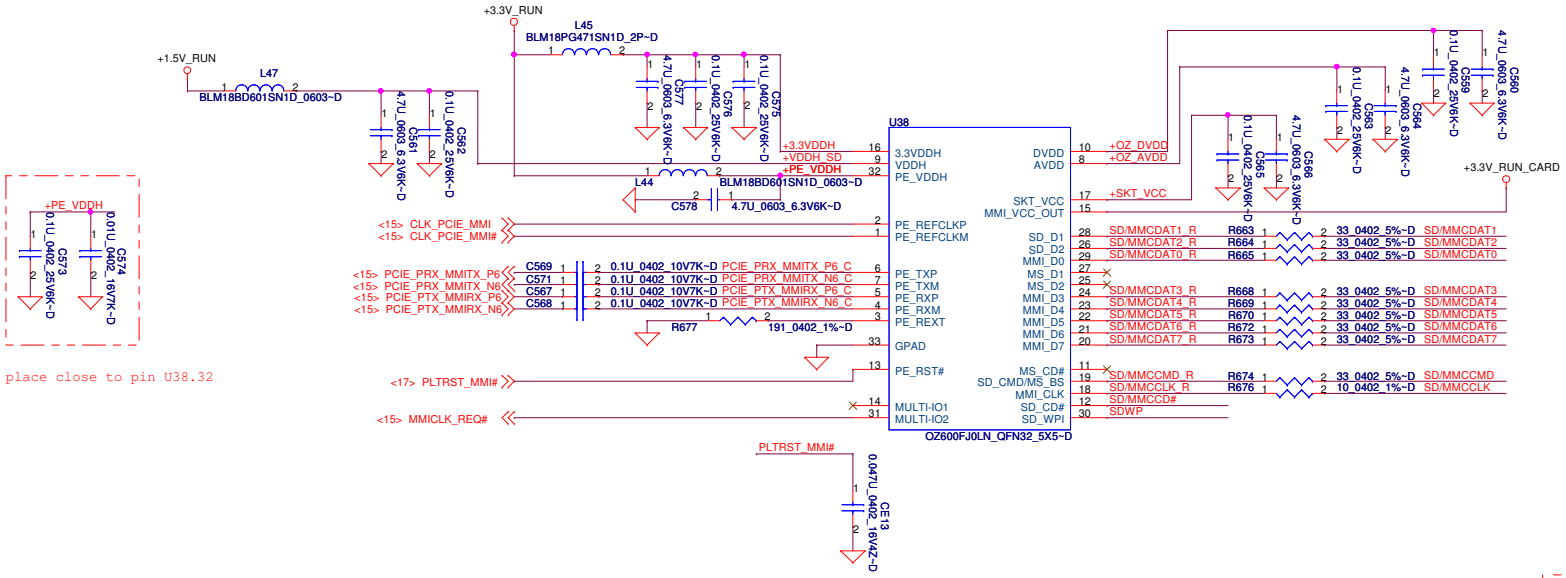

Note: The trace need to route as daisy-chain and the trace of SD signals need to route as short as possible

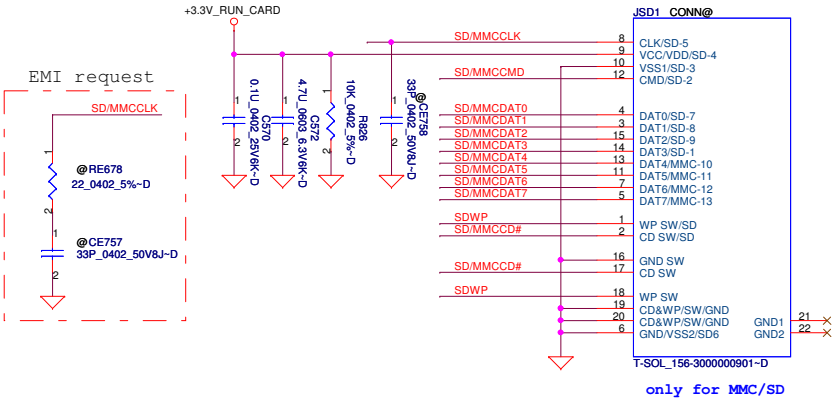

DELL CONFIDENTIAL/PROPRIETARY

PROPRIETARY NOTE: THIS SHEET OF ENGINEERING DRAWING AND SPECIFICATIONS CONTAINS CONFIDENTIAL TRADE SECRET AND OTHER PROPRIETARY INFORMATION OF DELL INC. ("DELL") THIS DOCUMENT MAY NOT BE TRANSFERRED OR COPIED WITHOUT THE EXPRESS WRITTEN AUTHORIZATION OF DELL. IN ADDITION, NEITHER THIS SHEET NOR THE INFORMATION IT CONTAINS WAY BE USED BY OR DISCLOSED TO ANY THIRD PARTY WITHOUT DELL'S EXPRESS WRITTEN CONSENT.

Compal Electronics, Inc.			
Title: Card Reader OZ600FJ0			
Size	Document Number: LA-7781		Rev 1.0
Date: Friday, February 24, 2012	Sheet 33 of 61		

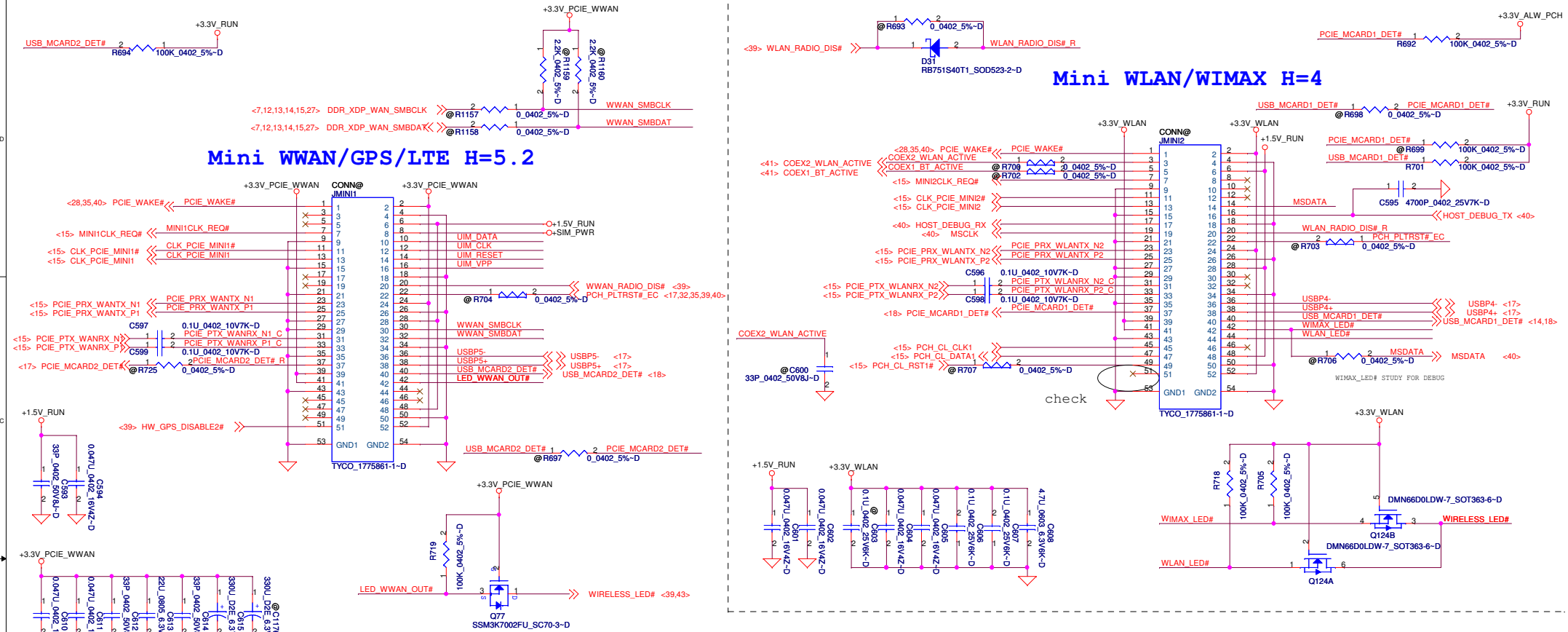

PWR Rail	Voltage Tolerance	Primary Power		Aux Power
		Peak	Normal	Normal
+3.3V	+-9%	1000	750	
+3.3Vaux	+-9%	330	250	250 (Wake enable) 5 (Not wake enable)
+1.5V	+-5%	500	375	NA

PROPRIETARY NOTE: THIS SHEET OF ENGINEERING DRAWING AND SPECIFICATIONS CONTAINS CONFIDENTIAL TRADE SECRET AND OTHER PROPRIETARY INFORMATION OF DELL INC. ("DELL") THIS DOCUMENT MAY NOT BE TRANSFERRED OR COPIED WITHOUT THE EXPRESS WRITTEN AUTHORIZATION OF DELL. IN ADDITION, NEITHER THIS SHEET NOR THE INFORMATION IT CONTAINS MAY BE USED BY OR DISCLOSED TO ANY THIRD PARTY WITHOUT DELL'S EXPRESS WRITTEN CONSENT.

DELL CONFIDENTIAL/PROPRIETARY

Compal Electronics, Inc.

Title: Mini Card

Size | Document Number: LA-7781 | Rev: 1.0

Date: Friday, February 24, 2012 | Sheet 34 of 61

Power Control for Mini card2

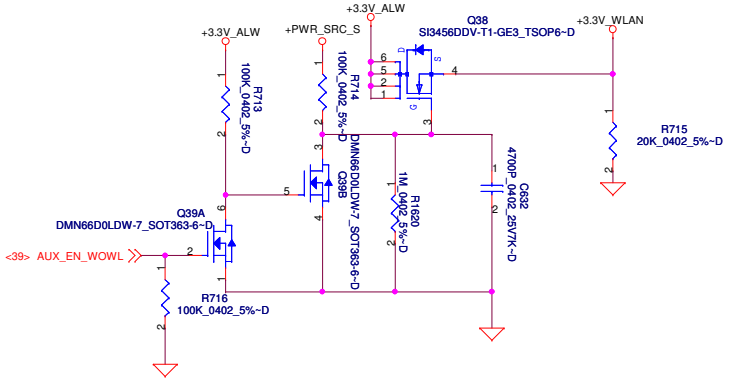

Express Card PWR S/W

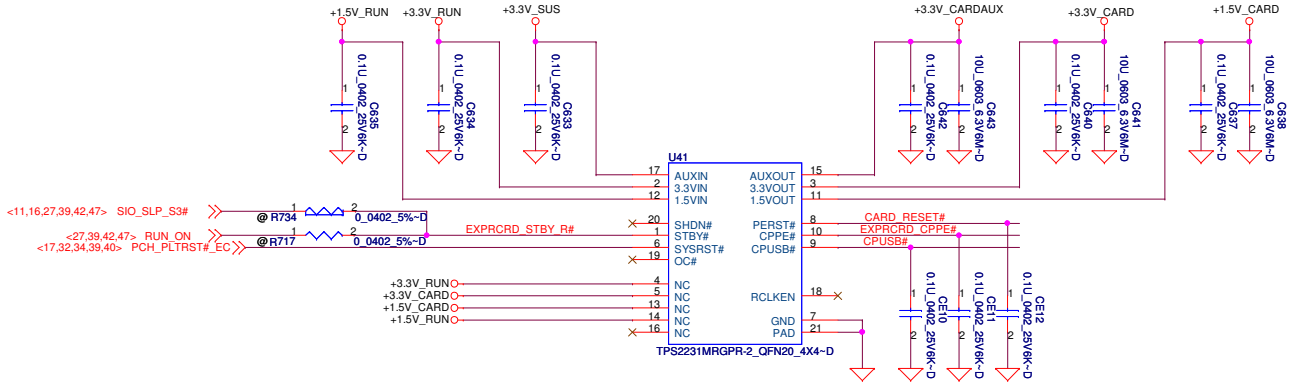

Note: Add connection on pin4, pin5, pin 13 and pin14 to support GMT 2nd source part

Power Control for Mini card1

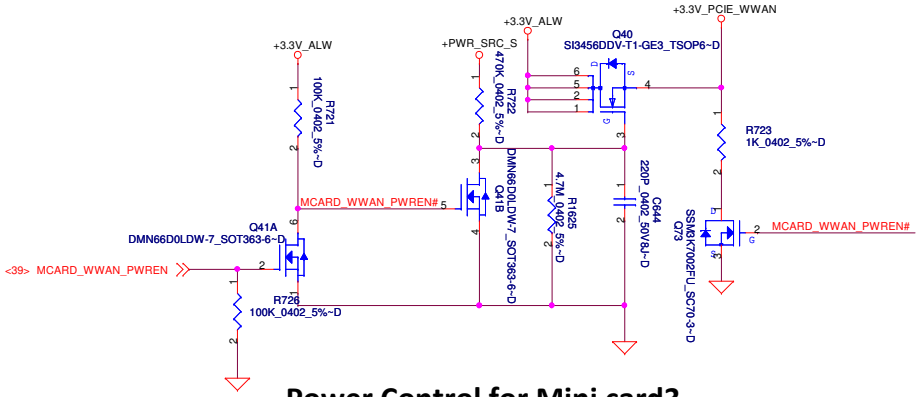

Express Card Conn.

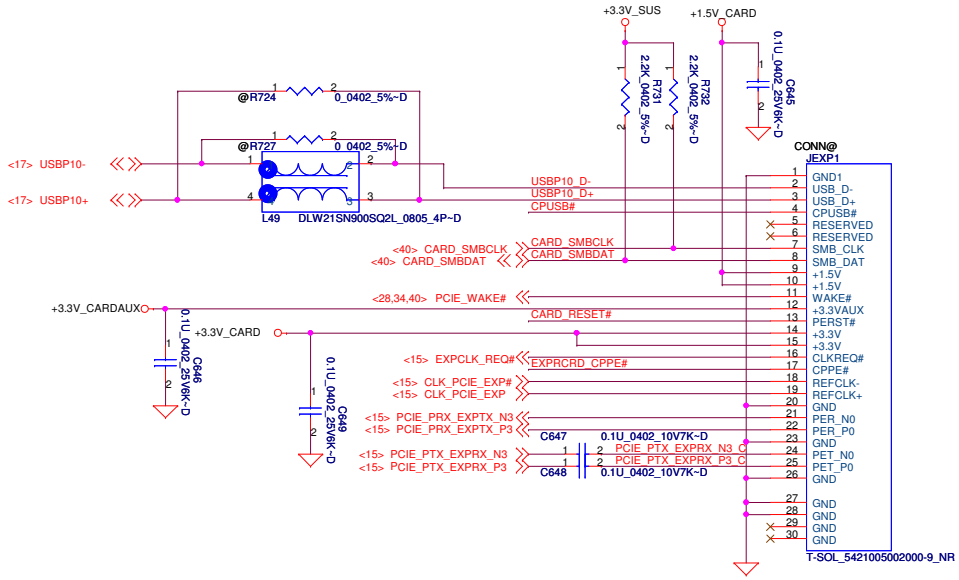

Power Control for Mini card3

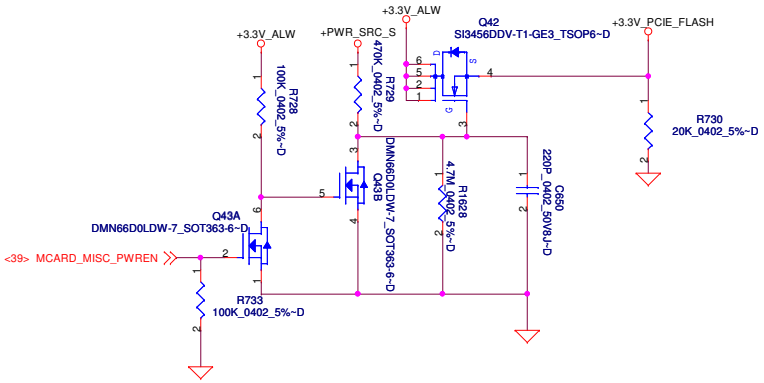

PROPRIETARY NOTE: THIS SHEET OF ENGINEERING DRAWING AND SPECIFICATIONS CONTAINS CONFIDENTIAL TRADE SECRET AND OTHER PROPRIETARY INFORMATION OF DELL INC. ("DELL") THIS DOCUMENT MAY NOT BE TRANSFERRED OR COPIED WITHOUT THE EXPRESS WRITTEN AUTHORIZATION OF DELL. IN ADDITION, NEITHER THIS SHEET NOR THE INFORMATION IT CONTAINS WAY BE USED BY OR DISCLOSED TO ANY THIRD PARTY WITHOUT DELL'S EXPRESS WRITTEN CONSENT.

DELL CONFIDENTIAL/PROPRIETARY

Compal Electronics, Inc.	
Title: PCIE-SATA SW / PCIE PWR	
Size	Document Number: LA-7781	Rev: 1.0
Date: Friday, February 24, 2012	Sheet 35 of 61

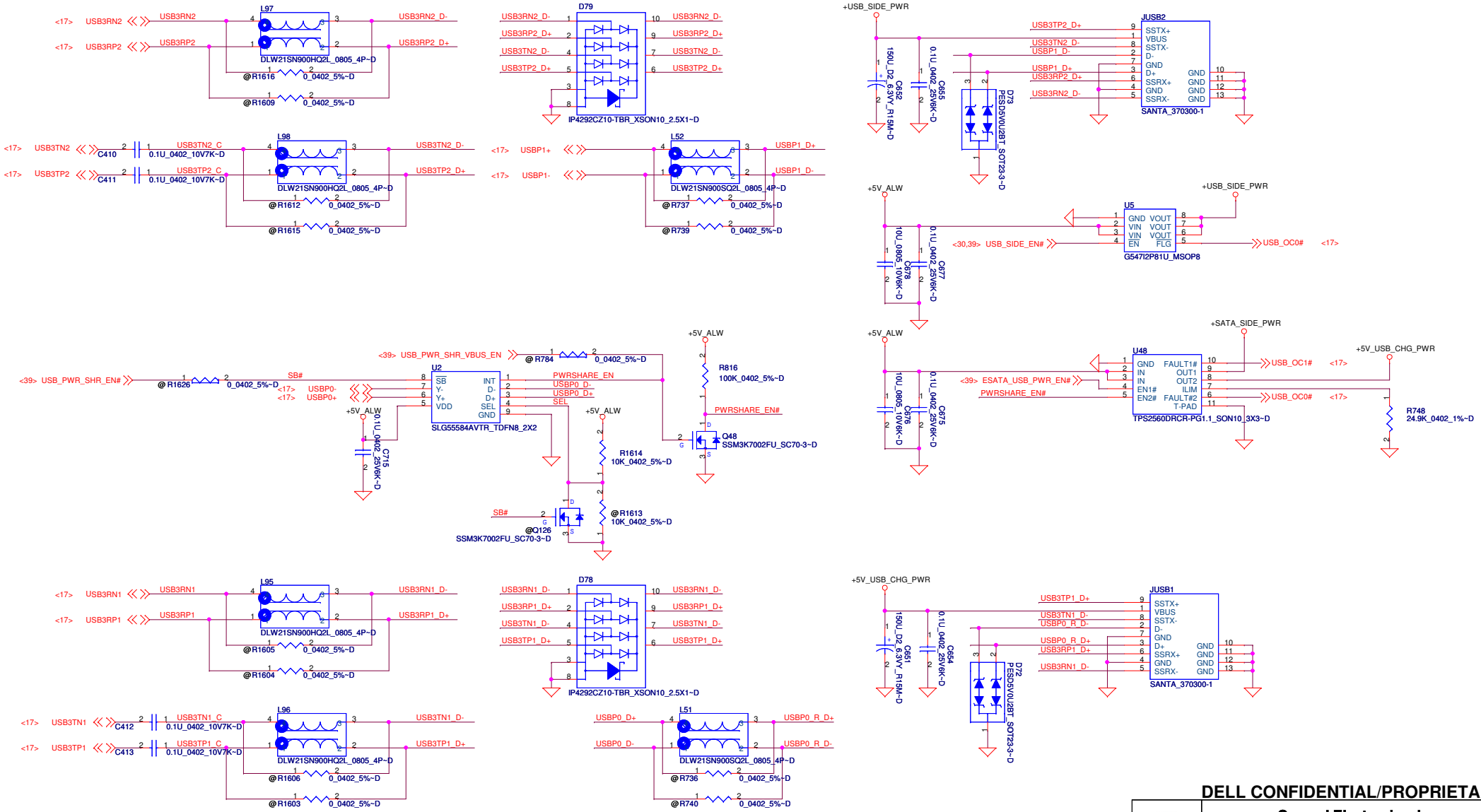

PROPRIETARY NOTE: THIS SHEET OF ENGINEERING DRAWING AND SPECIFICATIONS CONTAINS CONFIDENTIAL TRADE SECRET AND OTHER PROPRIETARY INFORMATION OF DELL INC. ("DELL") THIS DOCUMENT MAY NOT BE TRANSFERRED OR COPIED WITHOUT THE EXPRESS WRITTEN AUTHORIZATION OF DELL. IN ADDITION, NEITHER THIS SHEET NOR THE INFORMATION IT CONTAINS WAY BE USED BY OR DISCLOSED TO ANY THIRD PARTY WITHOUT DELL'S EXPRESS WRITTEN CONSENT.

DELL CONFIDENTIAL/PROPRIETARY

Compal Electronics, Inc.

Title: **USB x2**

Size | Document Number: **LA-7781** | Rev: 1.0

Date: Friday, February 24, 2012 | Sheet 36 of 61

ESATA Repeater

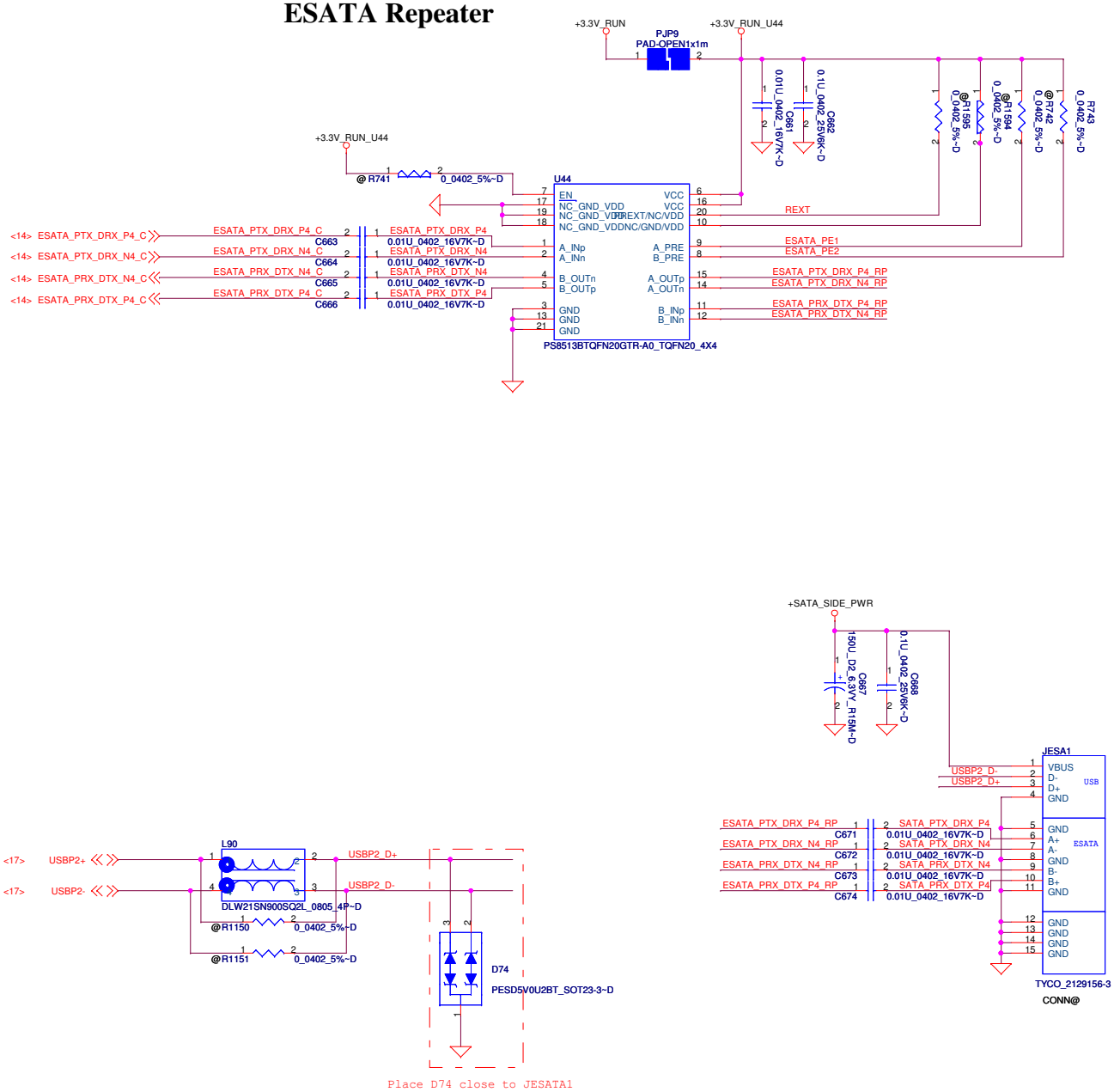

PROPRIETARY NOTE: THIS SHEET OF ENGINEERING DRAWING AND SPECIFICATIONS CONTAINS CONFIDENTIAL TRADE SECRET AND OTHER PROPRIETARY INFORMATION OF DELL INC. ("DELL") THIS DOCUMENT MAY NOT BE TRANSFERRED OR COPIED WITHOUT THE EXPRESS WRITTEN AUTHORIZATION OF DELL. IN ADDITION, NEITHER THIS SHEET NOR THE INFORMATION IT CONTAINS WAY BE USED BY OR DISCLOSED TO ANY THIRD PARTY WITHOUT DELL'S EXPRESS WRITTEN CONSENT.

DELL CONFIDENTIAL/PROPRIETARY

Compal Electronics, Inc.

Title: USB/ESATA/IO/MDC

Size | Document Number: LA-7781 | Rev: 1.0

Date: Friday, February 24, 2012 | Sheet 37 of 61

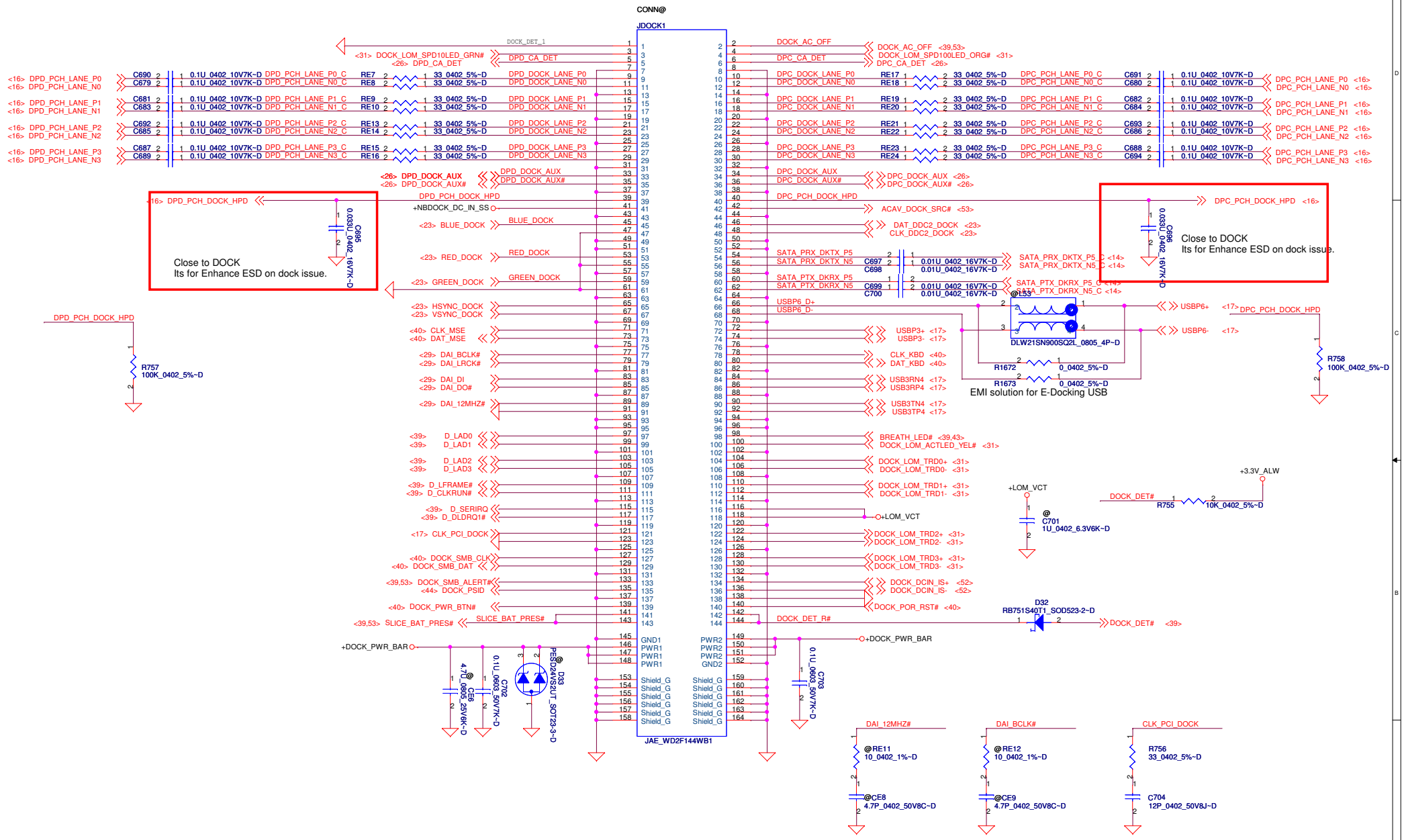

PROPRIETARY NOTE: THIS SHEET OF ENGINEERING DRAWING AND SPECIFICATIONS CONTAINS CONFIDENTIAL TRADE SECRET AND OTHER PROPRIETARY INFORMATION OF DELL INC. ("DELL") THIS DOCUMENT MAY NOT BE TRANSFERRED OR COPIED WITHOUT THE EXPRESS WRITTEN AUTHORIZATION OF DELL. IN ADDITION, NEITHER THIS SHEET NOR THE INFORMATION IT CONTAINS WAY BE USED BY OR DISCLOSED TO ANY THIRD PARTY WITHOUT DELL'S EXPRESS WRITTEN CONSENT.

DELL CONFIDENTIAL/PROPRIETARY

Compal Electronics, Inc.

Title: DOCKING CONN

Size | Document Number: LA-7781 | Rev: 1.0

Date: Friday, February 24, 2012 | Sheet 38 of 61

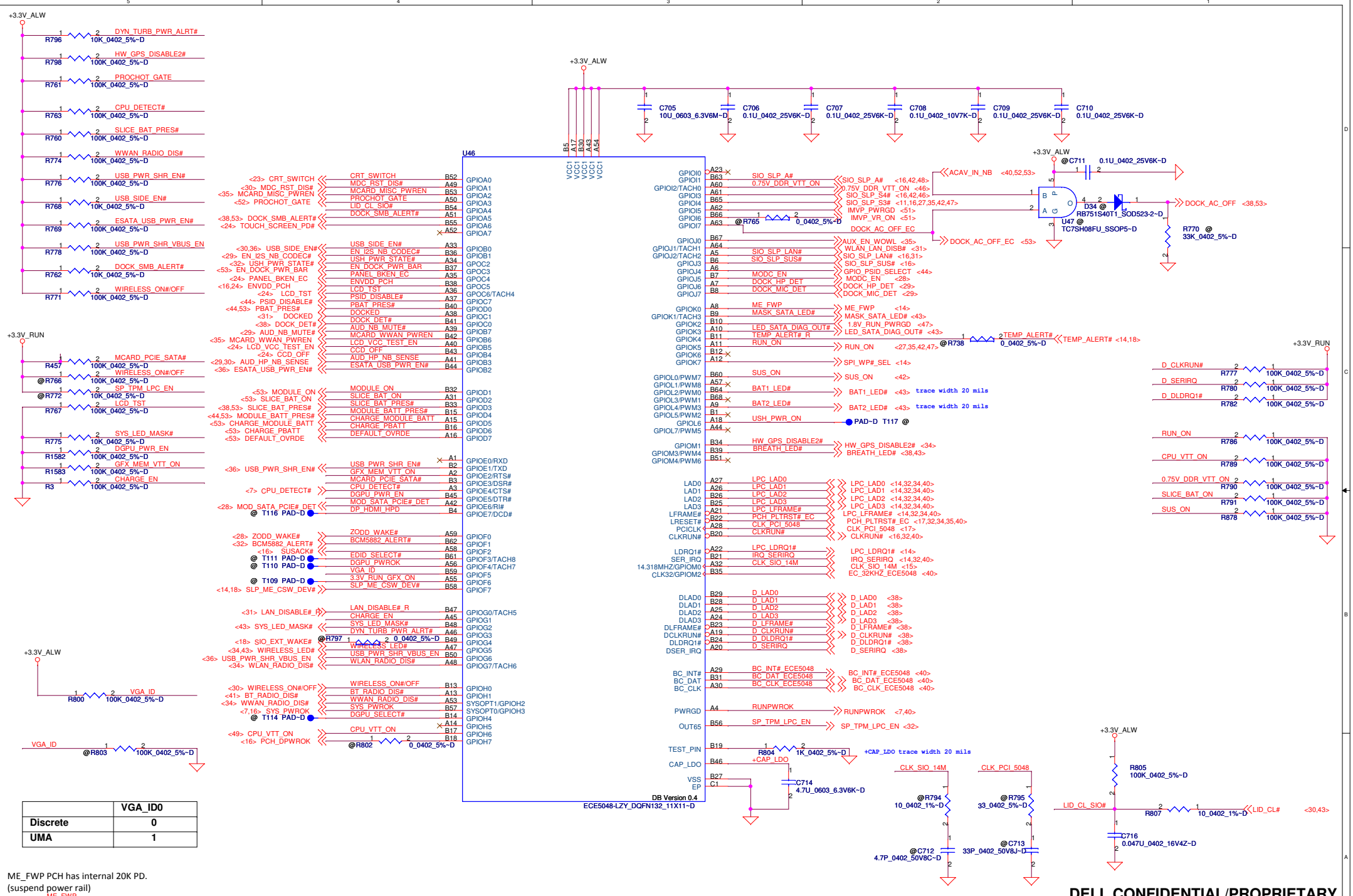

	VGA_ID0
Discrete	0
UMA	1

ME_FWP PCH has internal 20K PD.
(suspend power rail)

PROPRIETARY NOTE: THIS SHEET OF ENGINEERING DRAWING AND SPECIFICATIONS CONTAINS CONFIDENTIAL TRADE SECRET AND OTHER PROPRIETARY INFORMATION OF DELL INC. ("DELL") THIS DOCUMENT MAY NOT BE TRANSFERRED OR COPIED WITHOUT THE EXPRESS WRITTEN AUTHORIZATION OF DELL. IN ADDITION, NEITHER THIS SHEET NOR THE INFORMATION IT CONTAINS MAY BE USED BY OR DISCLOSED TO ANY THIRD PARTY WITHOUT DELL'S EXPRESS WRITTEN CONSENT.

DELL CONFIDENTIAL/PROPRIETARY

Compal Electronics, Inc.

Title: ECE5048

Size | Document Number: LA-7781 | Rev: 1.0

Date: Friday, February 24, 2012 | Sheet 39 of 61

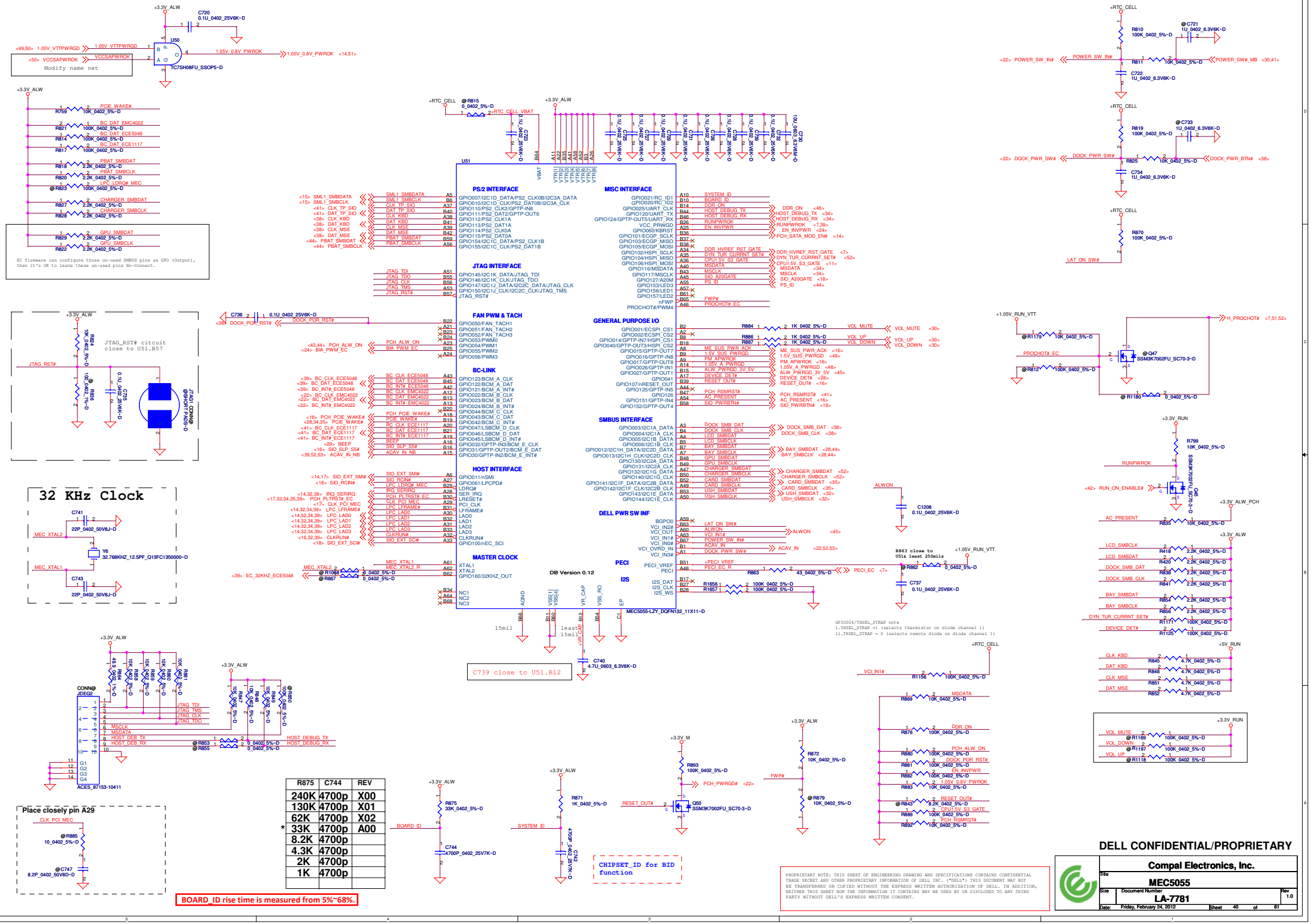

R875	C744	REV
240K	4700p	X00
130K	4700p	X01
62K	4700p	X02
* 33K	4700p	A00
8.2K	4700p	
4.3K	4700p	
2K	4700p	
1K	4700p	

PROPRIETARY NOTE: THIS SHEET OF ENGINEERING DRAWING AND SPECIFICATIONS CONTAINS CONFIDENTIAL TRADE SECRET AND OTHER PROPRIETARY INFORMATION OF DELL INC. ("DELL") THIS DOCUMENT MAY NOT BE TRANSFERRED OR COPIED WITHOUT THE EXPRESS WRITTEN AUTHORIZATION OF DELL. IN ADDITION, NEITHER THIS SHEET NOR THE INFORMATION IT CONTAINS MAY BE USED BY OR DISCLOSED TO ANY THIRD PARTY WITHOUT DELL'S EXPRESS WRITTEN CONSENT.

DELL CONFIDENTIAL/PROPRIETARY

Compal Electronics, Inc.

Title: MEC5055

Size: | Document Number: LA-7781 | Rev: 1.0

Date: Friday, February 24, 2012 | Sheet 40 of 61

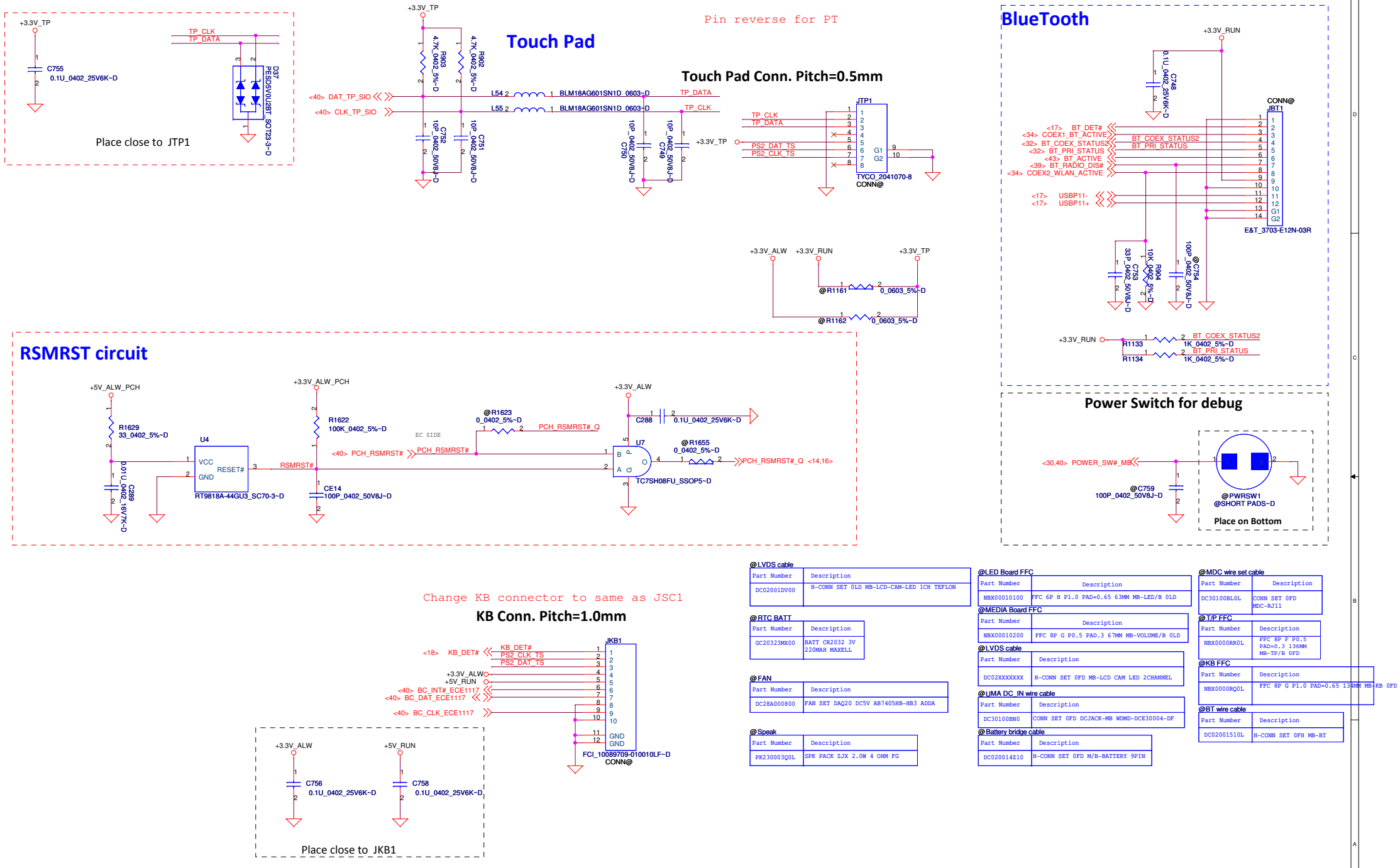

@LVDS cable

Part Number	Description
DC02001DV00	H-CONN SET 0LD MB-LCD-CAM-LED 1CH TEFLON

@RTC BATT

Part Number	Description
GC20323MX00	BATT CR2032 3V 220MAH MAXELL

@FAN

Part Number	Description
DC28A000800	FAN SET DAQ20 DC5V AB7405HB-HB3 ADDA

@Speak

Part Number	Description
PK230003Q0L	SPK PACK ZJX 2.0W 4 OHM FG

@LED Board FFC

Part Number	Description
NBX00010100	FFC 6P H P1.0 PAD=0.65 63MM MB-LED/B 0LD

@MEDIA Board FFC

Part Number	Description
NBX00010200	FFC 8P G P0.5 PAD.3 67MM MB-VOLUME/B 0LD

@LVDS cable

Part Number	Description
DC02XXXXXXX	H-CONN SET 0FD MB-LCD CAM LED 2CHANNEL

@UMA DC_IN wire cable

Part Number	Description
DC30100BN0	CONN SET 0FD DCJACK-MB WDMD-DCE30004-DF

@Battery bridge cable

Part Number	Description
DC020014Z10	H-CONN SET 0FD M/B-BATTERY 9PIN

@MDC wire set cable

Part Number	Description
DC30100BL0L	CONN SET 0FD MDC-RJ11

@T/P FFC

Part Number	Description
NBX0000RR0L	FFC 8P F P0.5 PAD=0.3 136MM MB-TP/B 0FD

@KB FFC

Part Number	Description
NBX0000RQ0L	FFC 8P G P1.0 PAD=0.65 138MM MB-KB 0FD

@BT wire cable

Part Number	Description
DC02001510L	H-CONN SET 0FH MB-BT

PROPRIETARY NOTE: THIS SHEET OF ENGINEERING DRAWING AND SPECIFICATIONS CONTAINS CONFIDENTIAL TRADE SECRET AND OTHER PROPRIETARY INFORMATION OF DELL INC. ("DELL") THIS DOCUMENT MAY NOT BE TRANSFERRED OR COPIED WITHOUT THE EXPRESS WRITTEN AUTHORIZATION OF DELL. IN ADDITION, NEITHER THIS SHEET NOR THE INFORMATION IT CONTAINS WAY BE USED BY OR DISCLOSED TO ANY THIRD PARTY WITHOUT DELL'S EXPRESS WRITTEN CONSENT.

DELL CONFIDENTIAL/PROPRIETARY

Compal Electronics, Inc.

Title: TP/KB/BT/FAN/RESET

Size | Document Number: LA-7781 | Rev: 1.0

Date: Friday, February 24, 2012 | Sheet 41 of 61

DC/DC Interface

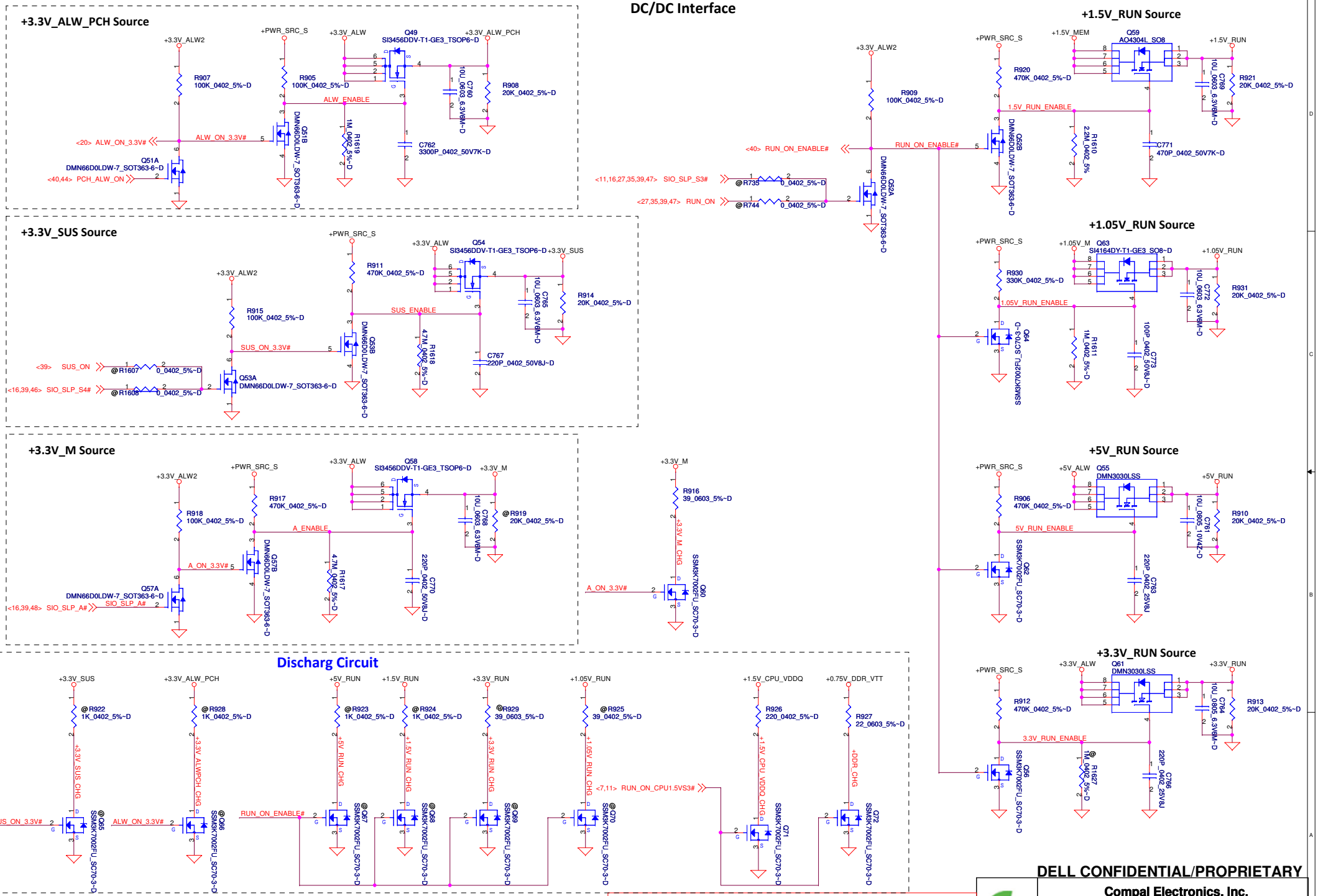

DELL CONFIDENTIAL/PROPRIETARY

PROPRIETARY NOTE: THIS SHEET OF ENGINEERING DRAWING AND SPECIFICATIONS CONTAINS CONFIDENTIAL TRADE SECRET AND OTHER PROPRIETARY INFORMATION OF DELL INC. ("DELL") THIS DOCUMENT MAY NOT BE TRANSFERRED OR COPIED WITHOUT THE EXPRESS WRITTEN AUTHORIZATION OF DELL. IN ADDITION, NEITHER THIS SHEET NOR THE INFORMATION IT CONTAINS WAY BE USED BY OR DISCLOSED TO ANY THIRD PARTY WITHOUT DELL'S EXPRESS WRITTEN CONSENT.

Compal Electronics, Inc.	
Title	POWER CONTROL
Size	
Document Number	LA-7781
Rev	1.0
Date: Friday, February 24, 2012	Sheet 42 of 61

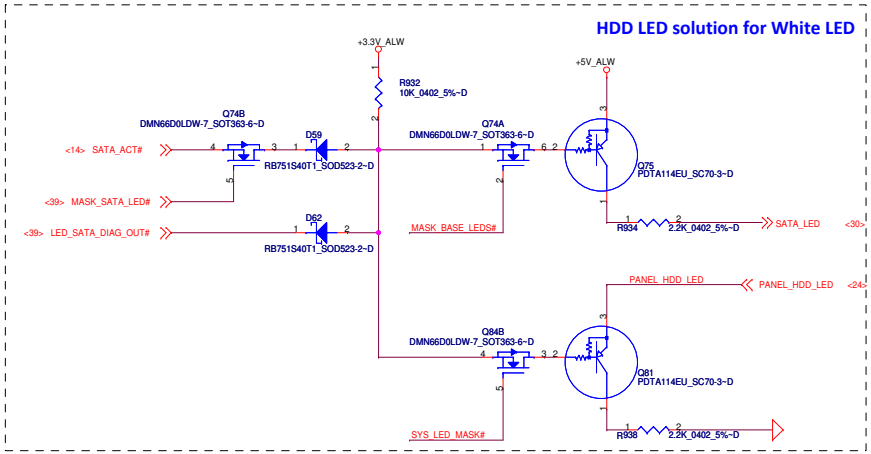

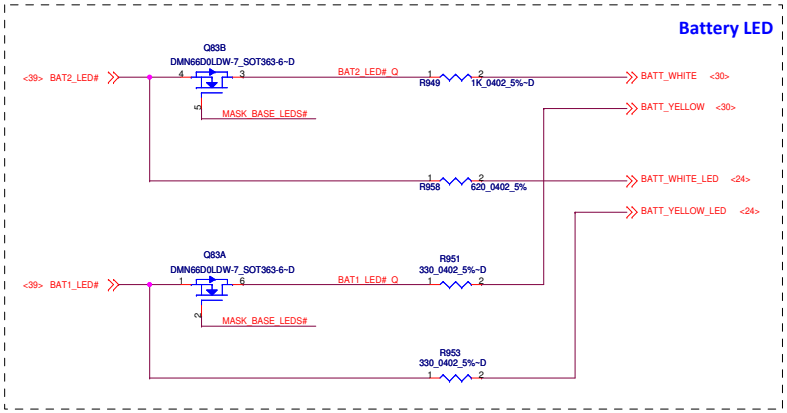

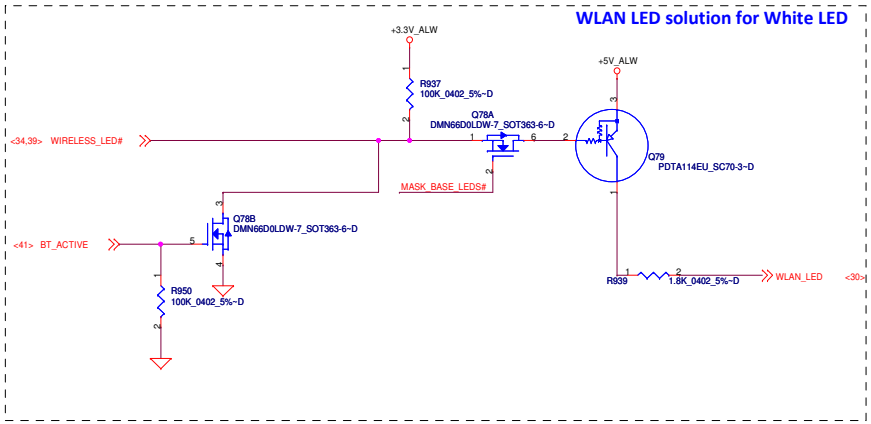

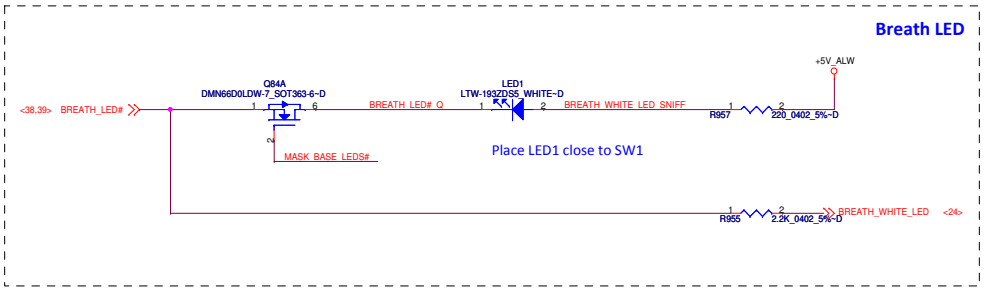

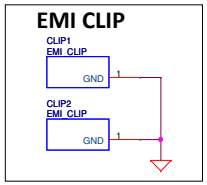

Fiducial Mark

@FD1 FIDUCIAL MARK~D
@FD2 FIDUCIAL MARK~D
@FD3 FIDUCIAL MARK~D
@FD4 FIDUCIAL MARK~D

LED Circuit Control Table

	SYS_LED_MASK#	LID_CL#
Mask All LEDs (Sniffer Function)	0	X
Mask Base MB LEDs (Lid Closed)	1	0
Do not Mask LEDs (Lid Opened)	1	1

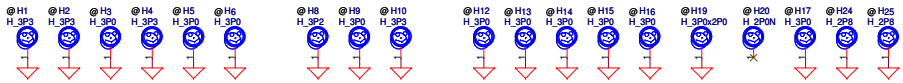

PROPRIETARY NOTE: THIS SHEET OF ENGINEERING DRAWING AND SPECIFICATIONS CONTAINS CONFIDENTIAL TRADE SECRET AND OTHER PROPRIETARY INFORMATION OF DELL INC. ("DELL") THIS DOCUMENT MAY NOT BE TRANSFERRED OR COPIED WITHOUT THE EXPRESS WRITTEN AUTHORIZATION OF DELL. IN ADDITION, NEITHER THIS SHEET NOR THE INFORMATION IT CONTAINS WAY BE USED BY OR DISCLOSED TO ANY THIRD PARTY WITHOUT DELL'S EXPRESS WRITTEN CONSENT.

DELL CONFIDENTIAL/PROPRIETARY

Compal Electronics, Inc.

Title: PAD and Standoff

Size | Document Number: LA-7781 | Rev: 1.0

Date: Friday, February 24, 2012 | Sheet 43 of 61

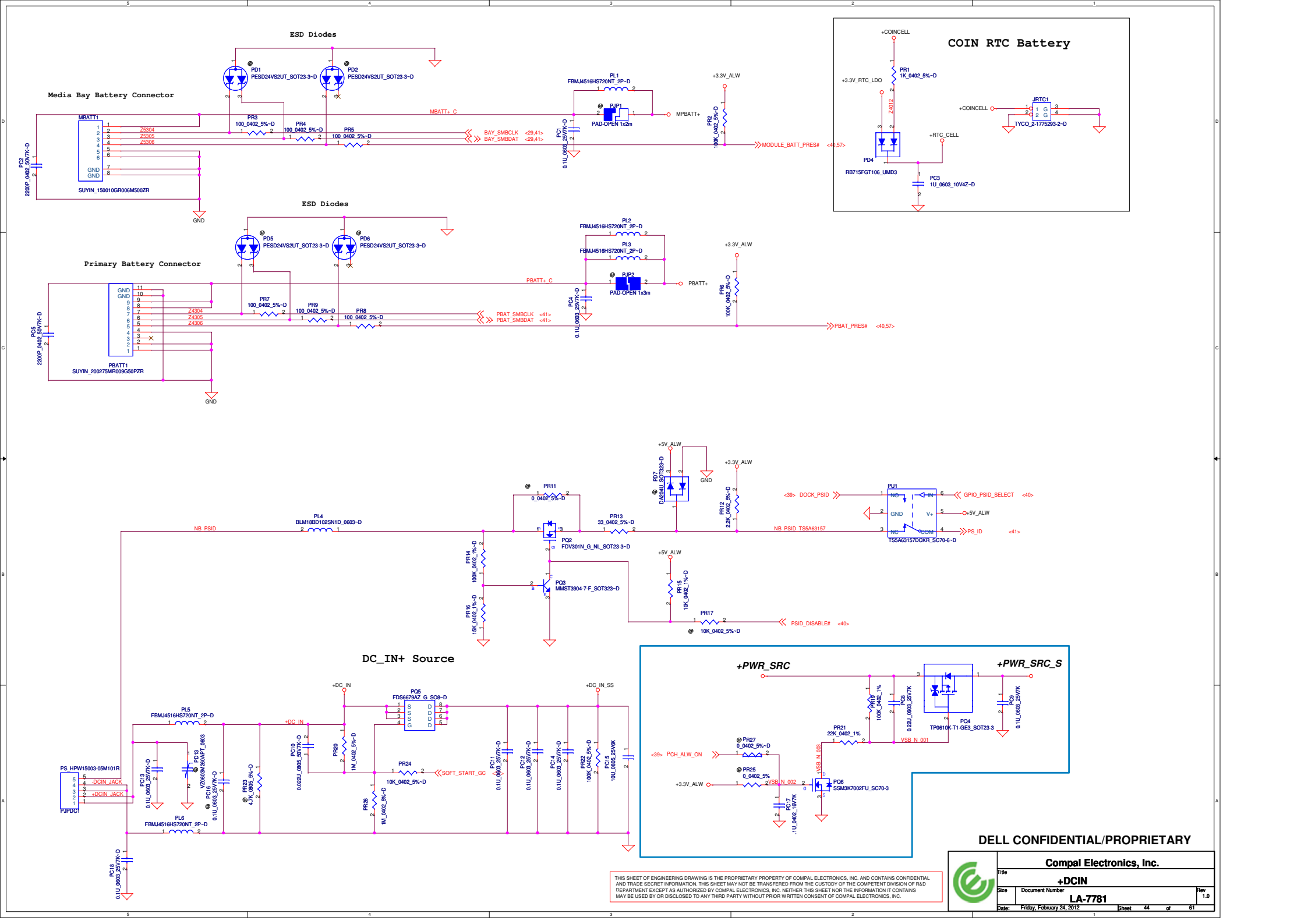

THIS SHEET OF ENGINEERING DRAWING IS THE PROPRIETARY PROPERTY OF COMPAL ELECTRONICS, INC. AND CONTAINS CONFIDENTIAL AND TRADE SECRET INFORMATION. THIS SHEET MAY NOT BE TRANSFERED FROM THE CUSTODY OF THE COMPETENT DIVISION OF R&D DEPARTMENT EXCEPT AS AUTHORIZED BY COMPAL ELECTRONICS, INC. NEITHER THIS SHEET NOR THE INFORMATION IT CONTAINS MAY BE USED BY OR DISCLOSED TO ANY THIRD PARTY WITHOUT PRIOR WRITTEN CONSENT OF COMPAL ELECTRONICS, INC.

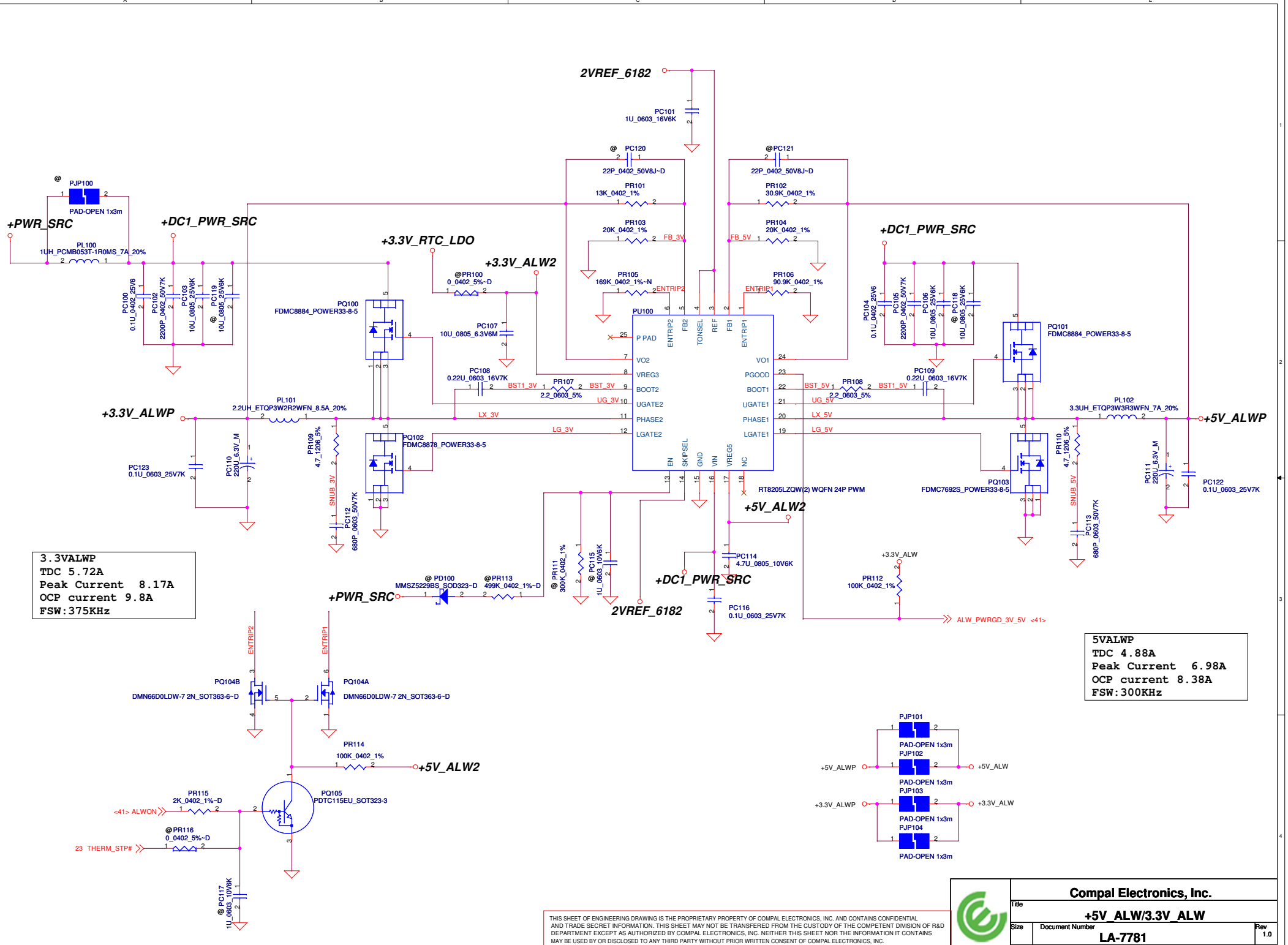

THIS SHEET OF ENGINEERING DRAWING IS THE PROPRIETARY PROPERTY OF COMPAL ELECTRONICS, INC. AND CONTAINS CONFIDENTIAL AND TRADE SECRET INFORMATION. THIS SHEET MAY NOT BE TRANSFERED FROM THE CUSTODY OF THE COMPETENT DIVISION OF R&D DEPARTMENT EXCEPT AS AUTHORIZED BY COMPAL ELECTRONICS, INC. NEITHER THIS SHEET NOR THE INFORMATION IT CONTAINS MAY BE USED BY OR DISCLOSED TO ANY THIRD PARTY WITHOUT PRIOR WRITTEN CONSENT OF COMPAL ELECTRONICS, INC.

Compal Electronics, Inc.

Title: +5V_ALW/3.3V_ALW

Size | Document Number: LA-7781 | Rev: 1.0

Date: Friday, February 24, 2012 | Sheet 45 of 61

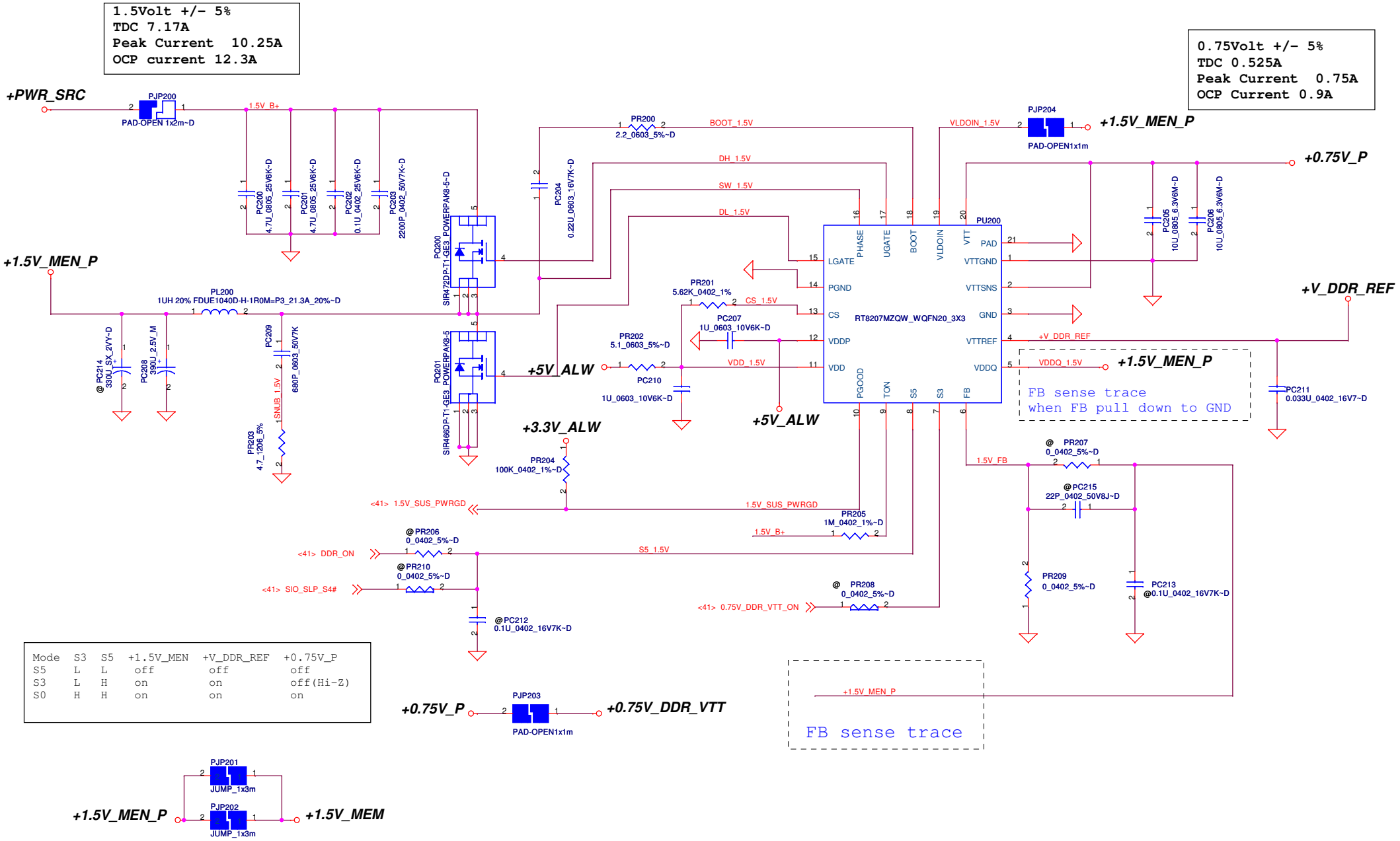

Mode	S3	S5	+1.5V_MEN	+V_DDR_REF	+0.75V_P
S5	L	L	off	off	off
S3	L	H	on	on	off(Hi-Z)
S0	H	H	on	on	on

DELL CONFIDENTIAL/PROPRIETARY

THIS SHEET OF ENGINEERING DRAWING IS THE PROPRIETARY PROPERTY OF COMPAL ELECTRONICS, INC. AND CONTAINS CONFIDENTIAL AND TRADE SECRET INFORMATION. THIS SHEET MAY NOT BE TRANSFERED FROM THE CUSTODY OF THE COMPETENT DIVISION OF R&D DEPARTMENT EXCEPT AS AUTHORIZED BY COMPAL ELECTRONICS, INC. NEITHER THIS SHEET NOR THE INFORMATION IT CONTAINS MAY BE USED BY OR DISCLOSED TO ANY THIRD PARTY WITHOUT PRIOR WRITTEN CONSENT OF COMPAL ELECTRONICS, INC.

Compal Electronics, Inc.	
Title	+1.5V_MEN/+0.75V_DDR_VTT
Size	Document Number: LA-7781
Rev	1.0
Date: Friday, February 24, 2012	Sheet 46 of 61

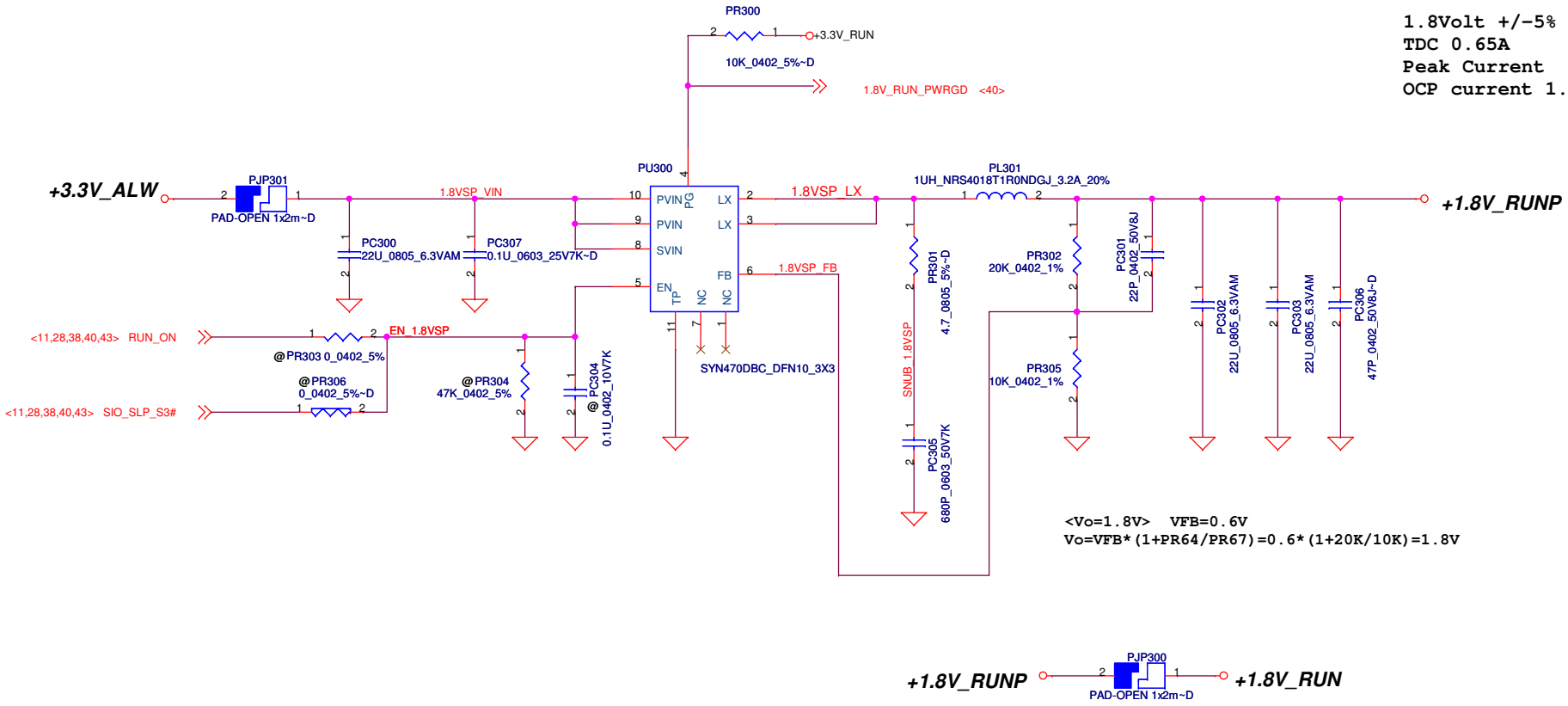

DELL CONFIDENTIAL/PROPRIETARY

THIS SHEET OF ENGINEERING DRAWING IS THE PROPRIETARY PROPERTY OF COMPAL ELECTRONICS, INC. AND CONTAINS CONFIDENTIAL AND TRADE SECRET INFORMATION. THIS SHEET MAY NOT BE TRANSFERED FROM THE CUSTODY OF THE COMPETENT DIVISION OF R&D DEPARTMENT EXCEPT AS AUTHORIZED BY COMPAL ELECTRONICS, INC. NEITHER THIS SHEET NOR THE INFORMATION IT CONTAINS MAY BE USED BY OR DISCLOSED TO ANY THIRD PARTY WITHOUT PRIOR WRITTEN CONSENT OF COMPAL ELECTRONICS, INC.

Compal Electronics, Inc.			
Title: +1.8V_RUN			
Size	Document Number: LA-7781		Rev 1.0
Date: Friday, February 24, 2012	Sheet 47 of 61		

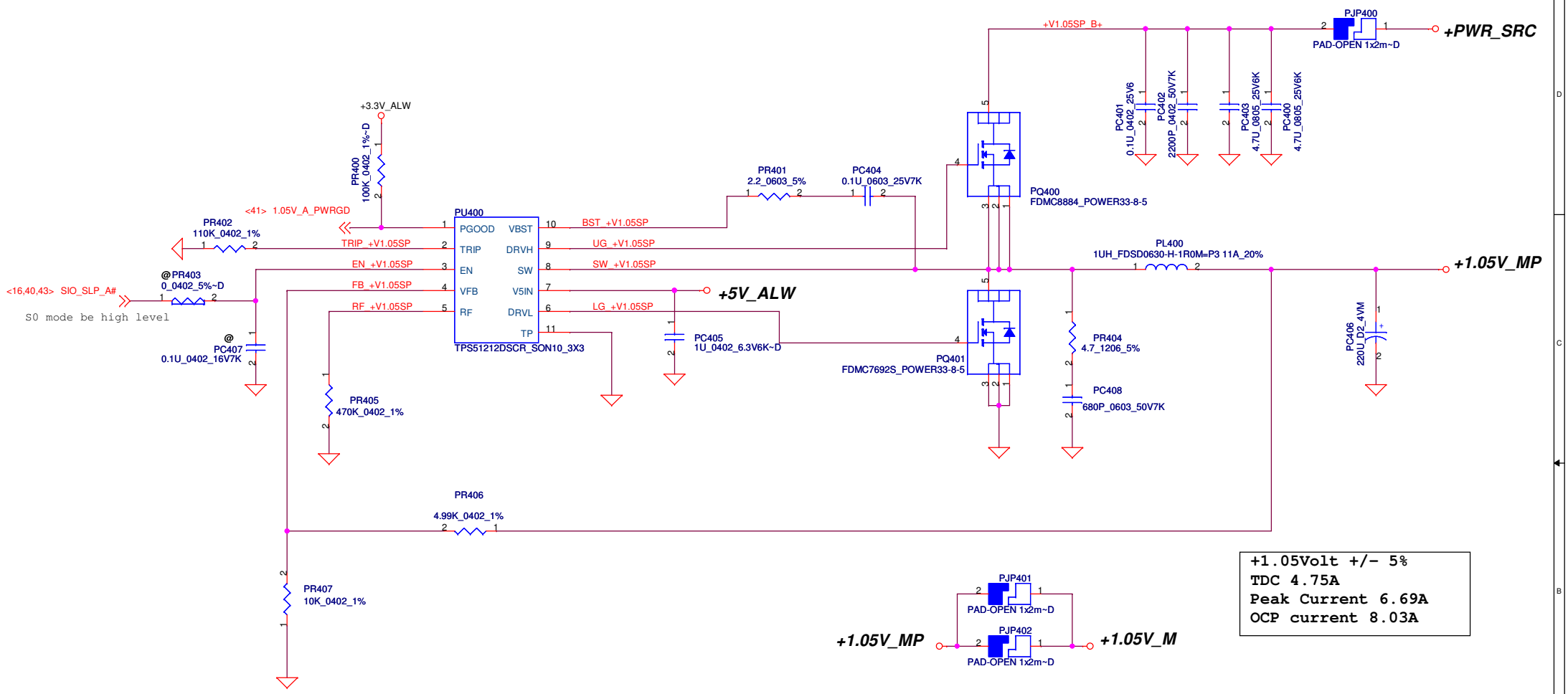

+1.05Volt +/- 5%
TDC 4.75A
Peak Current 6.69A
OCP current 8.03A

DELL CONFIDENTIAL/PROPRIETARY

THIS SHEET OF ENGINEERING DRAWING IS THE PROPRIETARY PROPERTY OF COMPAL ELECTRONICS, INC. AND CONTAINS CONFIDENTIAL AND TRADE SECRET INFORMATION. THIS SHEET MAY NOT BE TRANSFERED FROM THE CUSTODY OF THE COMPETENT DIVISION OF R&D DEPARTMENT EXCEPT AS AUTHORIZED BY COMPAL ELECTRONICS, INC. NEITHER THIS SHEET NOR THE INFORMATION IT CONTAINS MAY BE USED BY OR DISCLOSED TO ANY THIRD PARTY WITHOUT PRIOR WRITTEN CONSENT OF COMPAL ELECTRONICS, INC.

Compal Electronics, Inc.	
Title	+1.05V_M
Size	Document Number: LA-7781 — Rev 1.0
Date: Friday, February 24, 2012	Sheet 48 of 61

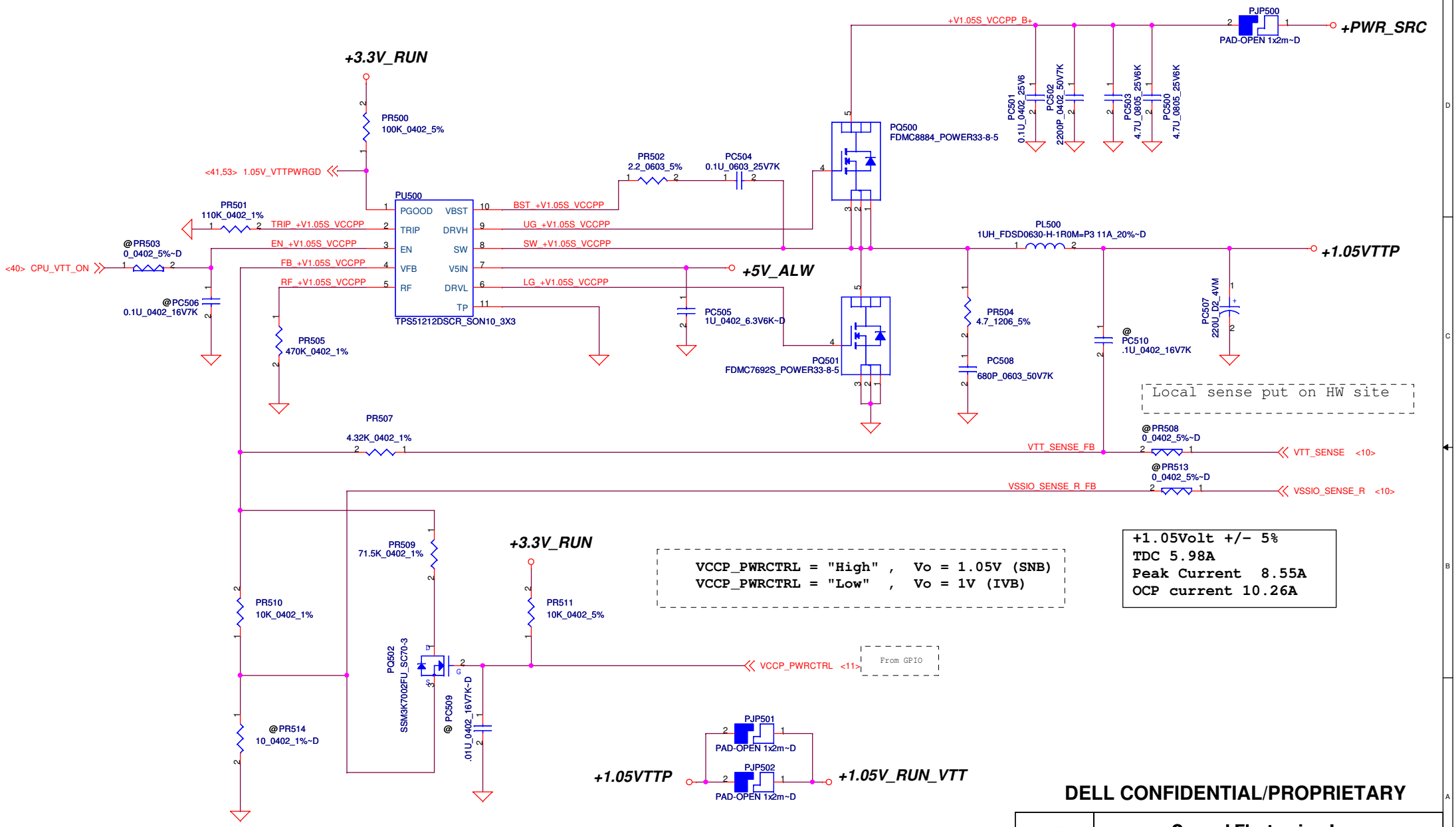

DELL CONFIDENTIAL/PROPRIETARY

THIS SHEET OF ENGINEERING DRAWING IS THE PROPRIETARY PROPERTY OF COMPAL ELECTRONICS, INC. AND CONTAINS CONFIDENTIAL AND TRADE SECRET INFORMATION. THIS SHEET MAY NOT BE TRANSFERED FROM THE CUSTODY OF THE COMPETENT DIVISION OF R&D DEPARTMENT EXCEPT AS AUTHORIZED BY COMPAL ELECTRONICS, INC. NEITHER THIS SHEET NOR THE INFORMATION IT CONTAINS MAY BE USED BY OR DISCLOSED TO ANY THIRD PARTY WITHOUT PRIOR WRITTEN CONSENT OF COMPAL ELECTRONICS, INC.

Compal Electronics, Inc.			
Title: +1.05V_RUN_VTT			
Size	Document Number: LA-7781		Rev 1.0
Date: Friday, February 24, 2012	Sheet 49 of 61		

VID [0]	VID[1]	VCCSA Vout
0	0	0.9V
0	1	0.8V
1	0	0.725V
1	1	0.675V

output voltage adjustable network

The 1k PD on the VCCSA VIDs are empty. These should be stuffed to ensure that VCCSA VID is 00 prior to VCCIO stability.

VCCSA
TDC 4.2A
Peak Current 6A
OCP current 7.2A

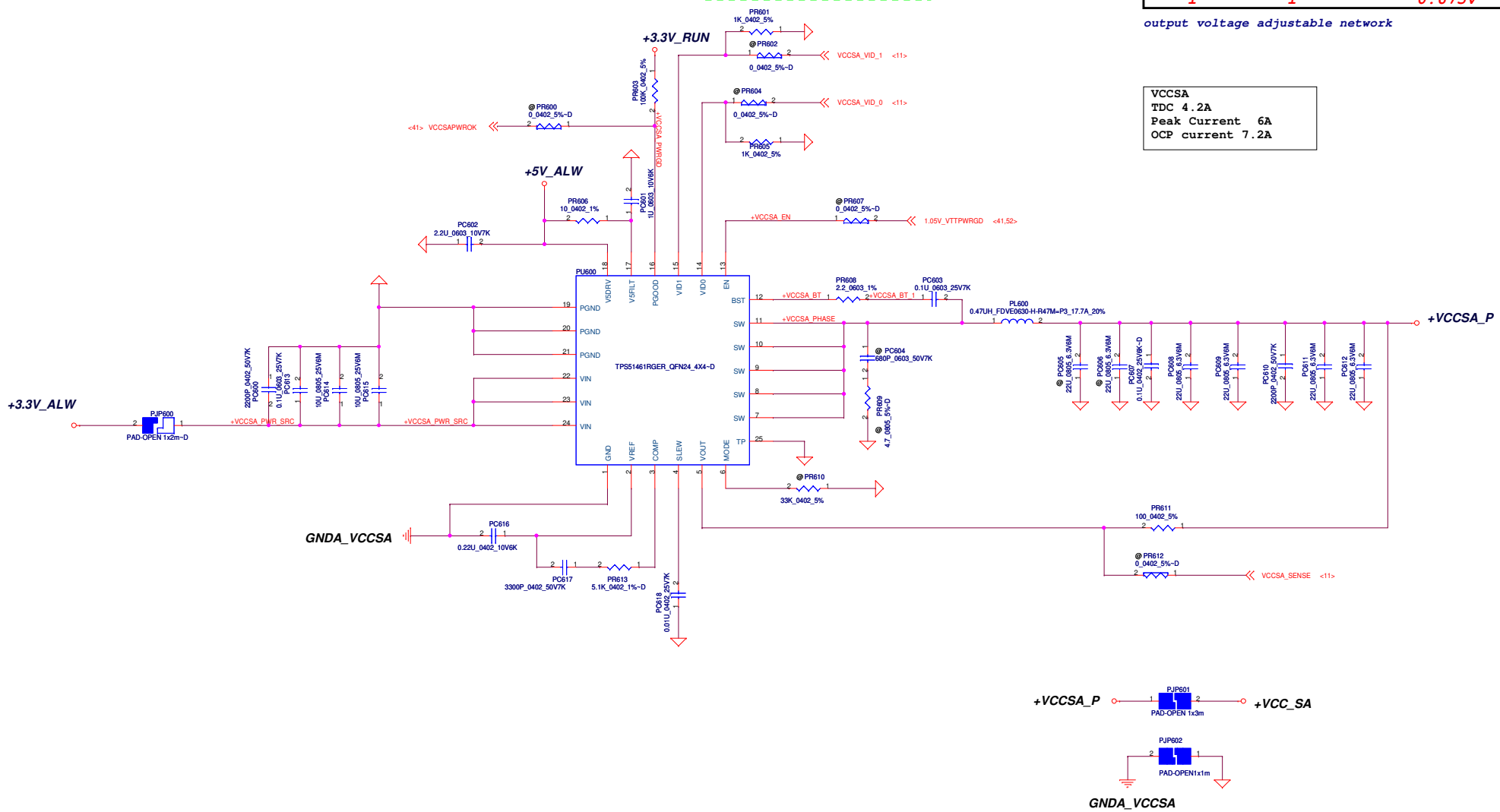

DELL CONFIDENTIAL/PROPRIETARY

THIS SHEET OF ENGINEERING DRAWING IS THE PROPRIETARY PROPERTY OF COMPAL ELECTRONICS, INC. AND CONTAINS CONFIDENTIAL AND TRADE SECRET INFORMATION. THIS SHEET MAY NOT BE TRANSFERED FROM THE CUSTODY OF THE COMPETENT DIVISION OF R&D DEPARTMENT EXCEPT AS AUTHORIZED BY COMPAL ELECTRONICS, INC. NEITHER THIS SHEET NOR THE INFORMATION IT CONTAINS MAY BE USED BY OR DISCLOSED TO ANY THIRD PARTY WITHOUT PRIOR WRITTEN CONSENT OF COMPAL ELECTRONICS, INC.

Compal Electronics, Inc.

Title: +VCC_SA

Size | Document Number: LA-7781 | Rev: 1.0

Date: Friday, February 24, 2012 | Sheet 50 of 61

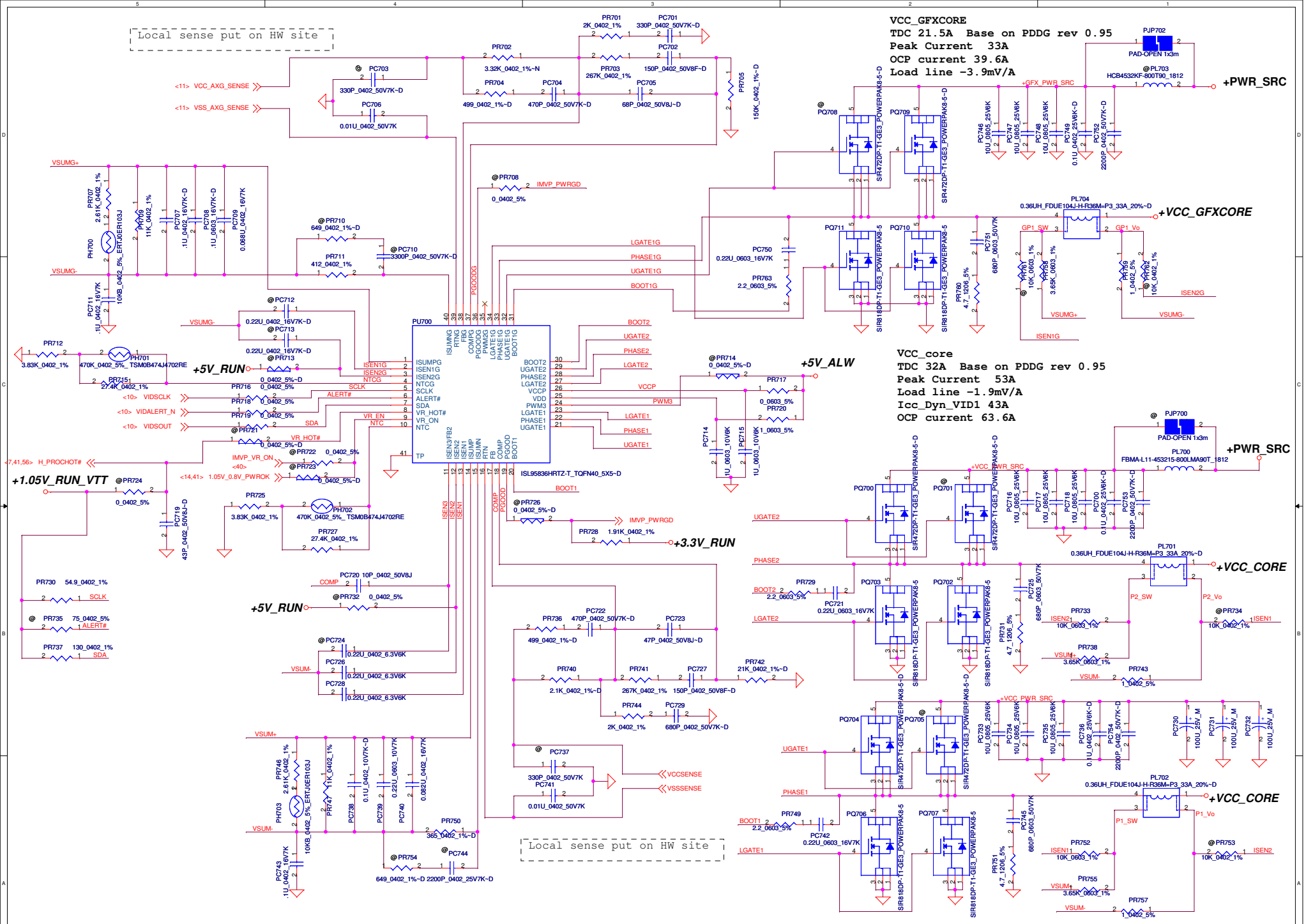

DELL CONFIDENTIAL/PROPRIETARY

THIS SHEET OF ENGINEERING DRAWING IS THE PROPRIETARY PROPERTY OF COMPAL ELECTRONICS, INC. AND CONTAINS CONFIDENTIAL AND TRADE SECRET INFORMATION. THIS SHEET MAY NOT BE TRANSFERED FROM THE CUSTODY OF THE COMPETENT DIVISION OF R&D DEPARTMENT EXCEPT AS AUTHORIZED BY COMPAL ELECTRONICS, INC. NEITHER THIS SHEET NOR THE INFORMATION IT CONTAINS MAY BE USED BY OR DISCLOSED TO ANY THIRD PARTY WITHOUT PRIOR WRITTEN CONSENT OF COMPAL ELECTRONICS, INC.

Compal Electronics, Inc.

Title: **+VCC_CORE**

Size | Document Number: **LA-7781** | Rev: 1.0

Date: Friday, February 24, 2012 | Sheet 51 of 61

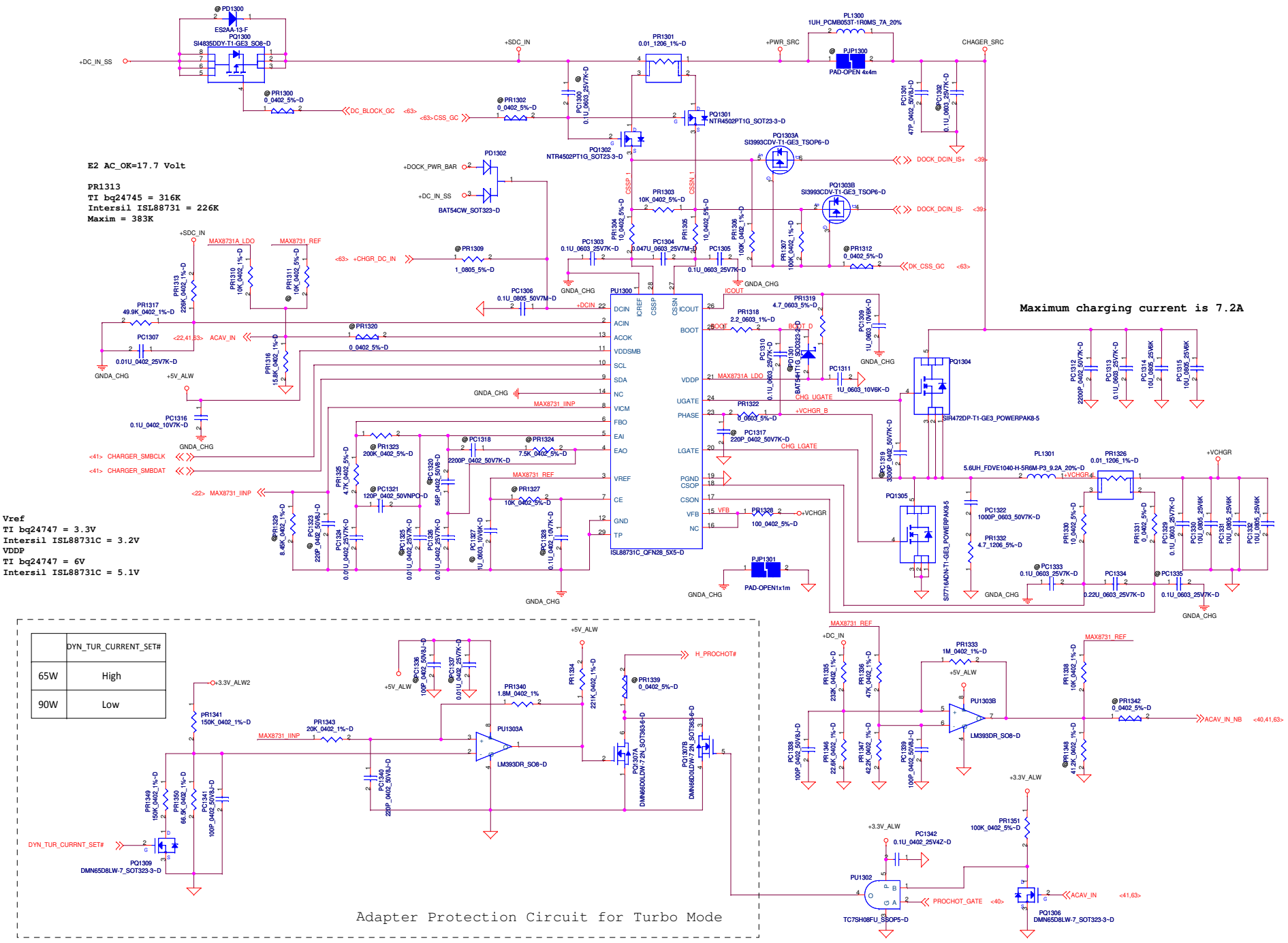

	DYN_TUR_CURRENT_SET#
65W	High
90W	Low

DELL CONFIDENTIAL/PROPRIETARY

THIS SHEET OF ENGINEERING DRAWING IS THE PROPRIETARY PROPERTY OF COMPAL ELECTRONICS, INC. AND CONTAINS CONFIDENTIAL AND TRADE SECRET INFORMATION. THIS SHEET MAY NOT BE TRANSFERED FROM THE CUSTODY OF THE COMPETENT DIVISION OF R&D DEPARTMENT EXCEPT AS AUTHORIZED BY COMPAL ELECTRONICS, INC. NEITHER THIS SHEET NOR THE INFORMATION IT CONTAINS MAY BE USED BY OR DISCLOSED TO ANY THIRD PARTY WITHOUT PRIOR WRITTEN CONSENT OF COMPAL ELECTRONICS, INC.

Compal Electronics, Inc.

Title: Charger

Size | Document Number: LA-7781 | Rev: 1.0

Date: Friday, February 24, 2012 | Sheet 52 of 61

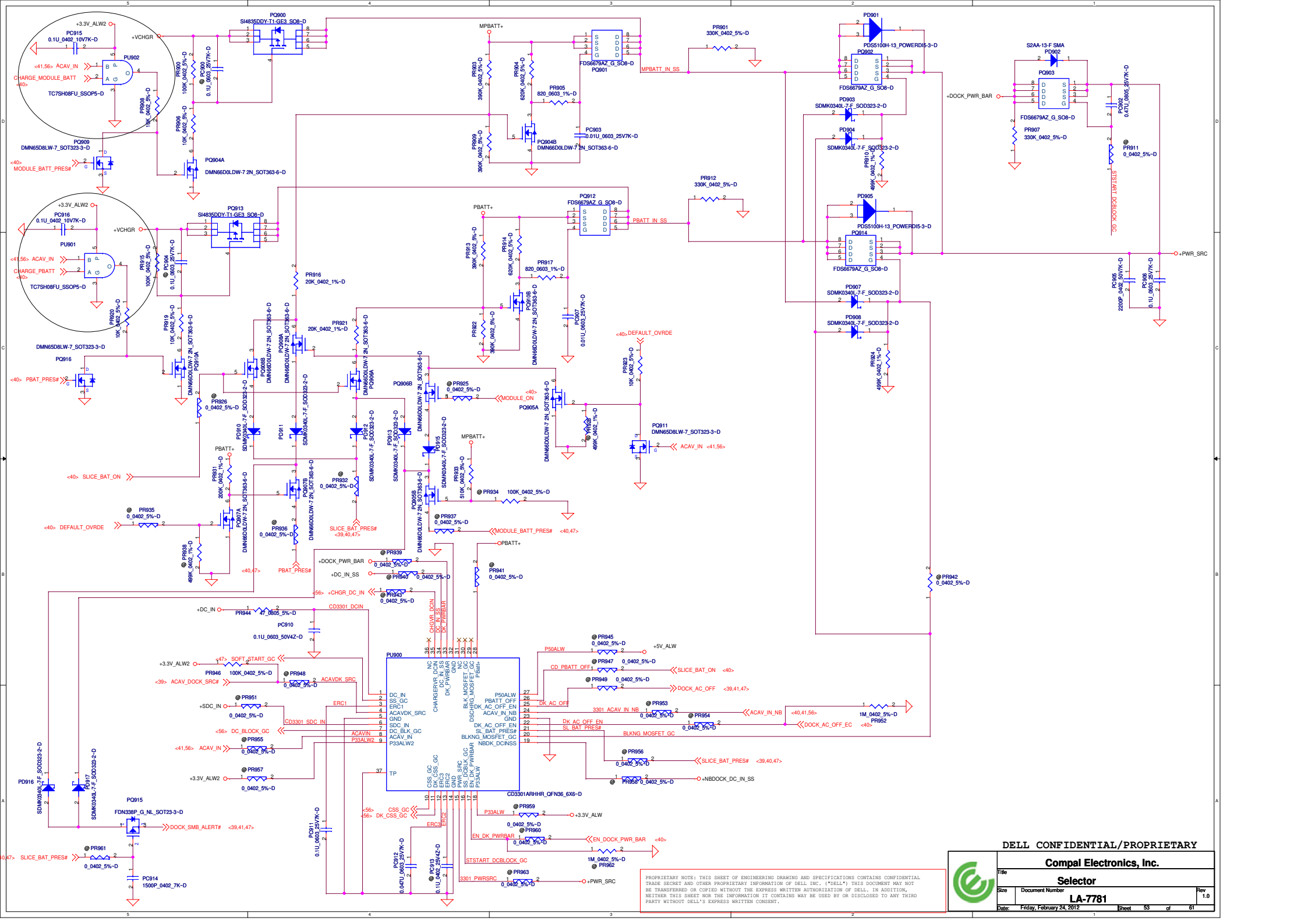
PU900
CD3301ARHHR_QFN36_6X6~D
PU902
TC7SH08FU_SSOP5~D
PU901
TC7SH08FU_SSOP5~D
PQ900
SI4835DDY-T1-GE3_SO8~D
PQ913
SI4835DDY-T1-GE3_SO8~D
PQ901
FDS6679AZ_G_SO8~D
PQ912
FDS6679AZ_G_SO8~D
PQ902
FDS6679AZ_G_SO8~D
PQ903
FDS6679AZ_G_SO8~D
PQ914
FDS6679AZ_G_SO8~D
PQ909
DMN65D8LW-7_SOT323-3~D
PQ916
DMN65D8LW-7_SOT323-3~D
PQ911
DMN65D8LW-7_SOT323-3~D
PQ915
FDN338P_G_NL_SOT23-3~D
PD901
PDS5100H-13_POWERDI5-3~D
PD905
PDS5100H-13_POWERDI5-3~D
PD902
S2AA-13-F SMA
PD903
SDMK0340L-7-F_SOD323-2~D
PD904
SDMK0340L-7-F_SOD323-2~D
PD907
SDMK0340L-7-F_SOD323-2~D
PD908
SDMK0340L-7-F_SOD323-2~D
PD910
SDMK0340L-7-F_SOD323-2~D
PD911
SDMK0340L-7-F_SOD323-2~D
PD912
SDMK0340L-7-F_SOD323-2~D
PD913
SDMK0340L-7-F_SOD323-2~D
PD915
SDMK0340L-7-F_SOD323-2~D
PD916
SDMK0340L-7-F_SOD323-2~D
PD917
SDMK0340L-7-F_SOD323-2~D
PQ904A
DMN66D0LDW-7 2N_SOT363-6~D
PQ904B
DMN66D0LDW-7 2N_SOT363-6~D
PQ906A
DMN66D0LDW-7 2N_SOT363-6~D
PQ906B
DMN66D0LDW-7 2N_SOT363-6~D
PQ907A
DMN66D0LDW-7 2N_SOT363-6~D
PQ907B
DMN66D0LDW-7 2N_SOT363-6~D
PQ908A
DMN66D0LDW-7 2N_SOT363-6~D
PQ908B
DMN66D0LDW-7 2N_SOT363-6~D
PQ905A
DMN66D0LDW-7 2N_SOT363-6~D
PQ905B
DMN66D0LDW-7 2N_SOT363-6~D
MPBATT+
PBATT+
+3.3V_ALW2
+VCHGR
+PWR_SRC
+DOCK_PWR_BAR
MPBATT_IN_SS
PBATT_IN_SS
ACAV_IN
CHARGE_MODULE_BATT
CHARGE_PBATT
MODULE_BATT_PRES#
PBAT_PRES#
SLICE_BAT_ON
DEFAULT_OVRDE
MODULE_ON
SLICE_BAT_PRES#
MODULE_BATT_PRES#
+DC_IN_SS
+CHGR_DC_IN
+DC_IN
CD3301_DCIN
SOFT_START_GC
ACAV_DOCK_SRC#
ACAVDK_SRC
+SDC_IN
CD3301_SDC_IN
DC_BLOCK_GC
ACAVIN
+5V_ALW
CD_PBATT_OFF
SLICE_BAT_ON
DOCK_AC_OFF
DK_AC_OFF
3301_ACAV_IN_NB
ACAV_IN_NB
DOCK_AC_OFF_EC
DK_AC_OFF_EN
SL_BAT_PRES#
BLKNG_MOSFET_GC
+NBDOCK_DC_IN_SS
DOCK_SMB_ALERT#
CSS_GC
DK_CSS_GC
P33ALW
EN_DK_PWRBAR
EN_DOCK_PWR_BAR
STSTART_DCBLOCK_GC
3301_PWRSRC
+PWR_SRC
DELL CONFIDENTIAL/PROPRIETARY
Compal Electronics, Inc.
Title
Selector
Size
Document Number
LA-7781
Rev
1.0
Date: Friday, February 24, 2012
Sheet 53 of 61
PROPRIETARY NOTE: THIS SHEET OF ENGINEERING DRAWING AND SPECIFICATIONS CONTAINS CONFIDENTIAL TRADE SECRET AND OTHER PROPRIETARY INFORMATION OF DELL INC. ("DELL") THIS DOCUMENT MAY NOT BE TRANSFERRED OR COPIED WITHOUT THE EXPRESS WRITTEN AUTHORIZATION OF DELL. IN ADDITION, NEITHER THIS SHEET NOR THE INFORMATION IT CONTAINS WAY BE USED BY OR DISCLOSED TO ANY THIRD PARTY WITHOUT DELL'S EXPRESS WRITTEN CONSENT.

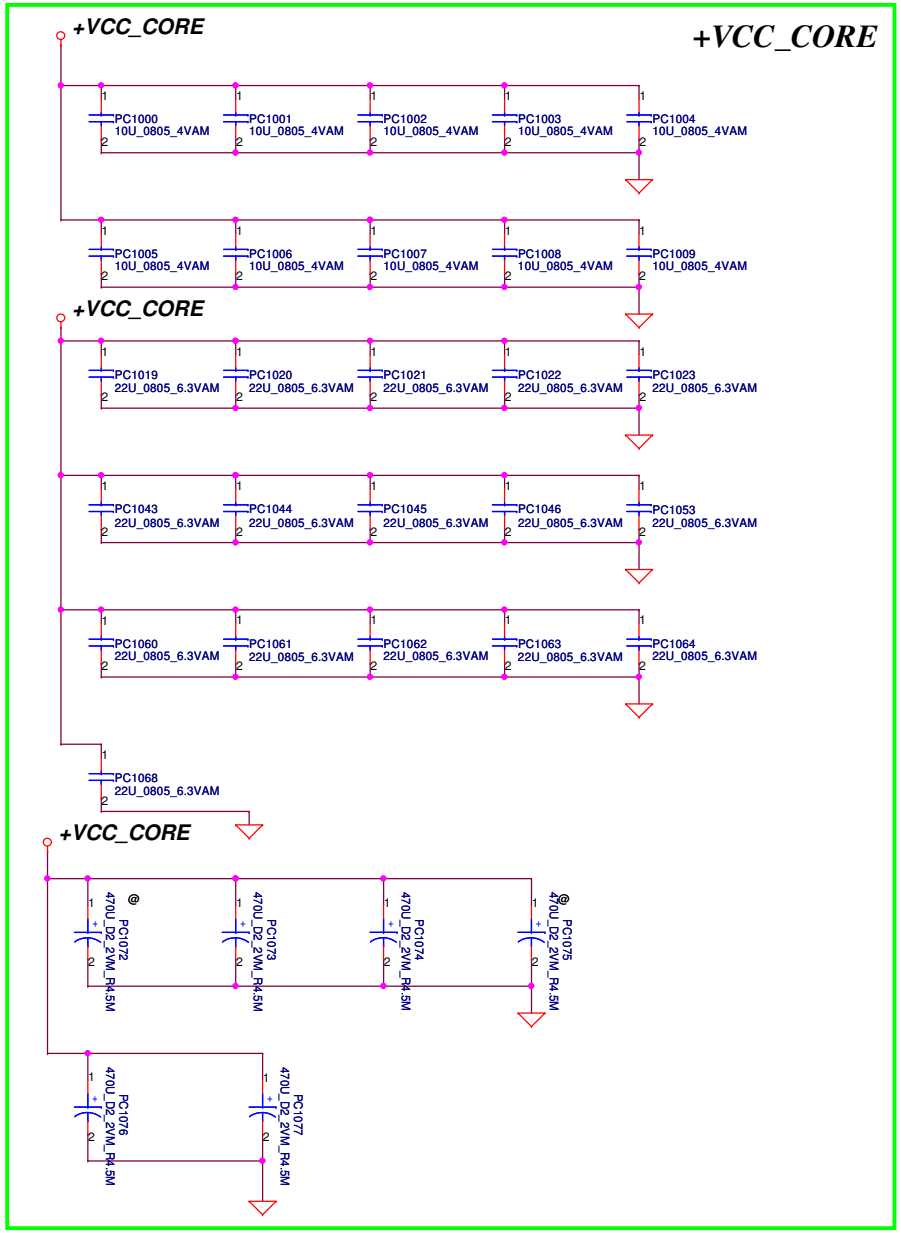

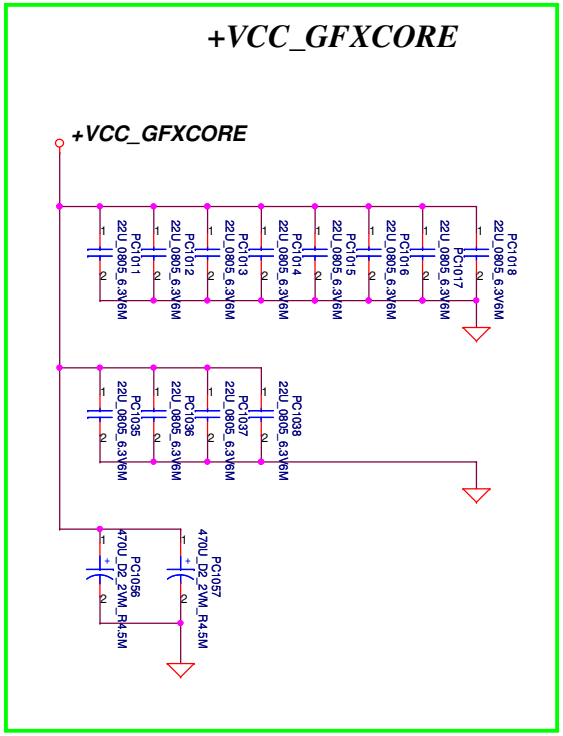

Below is 458544_CRV_PDDG_0.5 Table 5-8.

Socket Bottom	5 x 22 µF (0805) 5 x (0805) no-stuff sites
Socket Top	7 x 22 µF (0805) 2 x (0805) no-stuff sites

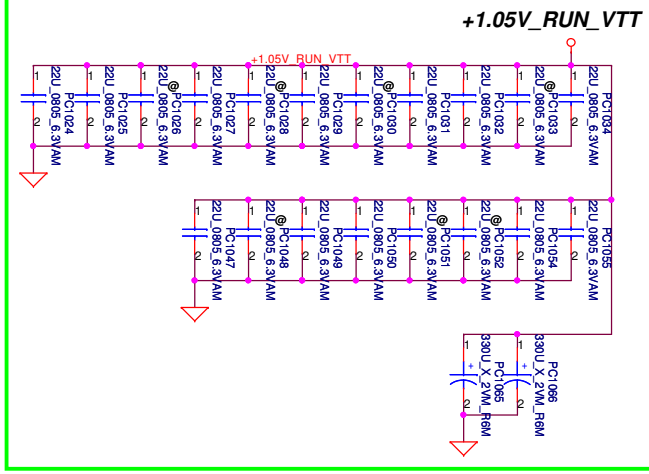

For sandy bridge depop PC1267
For ivy bridge pop PC1267

DELL CONFIDENTIAL/PROPRIETARY

THIS SHEET OF ENGINEERING DRAWING IS THE PROPRIETARY PROPERTY OF COMPAL ELECTRONICS, INC. AND CONTAINS CONFIDENTIAL AND TRADE SECRET INFORMATION. THIS SHEET MAY NOT BE TRANSFERED FROM THE CUSTODY OF THE COMPETENT DIVISION OF R&D DEPARTMENT EXCEPT AS AUTHORIZED BY COMPAL ELECTRONICS, INC. NEITHER THIS SHEET NOR THE INFORMATION IT CONTAINS MAY BE USED BY OR DISCLOSED TO ANY THIRD PARTY WITHOUT PRIOR WRITTEN CONSENT OF COMPAL ELECTRONICS, INC.

Compal Electronics, Inc.		
Title: PROCESSOR DECOUPLING		
Size	Document Number: LA-7781	Rev 1.0
Date: Friday, February 24, 2012	Sheet 54 of 61	

Version Change List (P. I. R. List) Page 1

Item	Page#	Title	Date	Request Owner	Issue Description	Solution Description	Rev.
1	46	+1.5V_MEN	7/5	Dell	Follow VC , enable use SIO_SLP_S4#.	Add PR210 for net "SIO_SLP_S4#"	X01
2	44	DCIN	8/4	Dell	ME design change.	PJPDC1 change from 7pin to 5pin	X01
3	45	+5V/3.3V	8/4	Compal	Main and 2nd IC common setting.	De-pop PD100,PR113,PR111	X01
4	51	Vcore/GFX core	8/4	Compal JimmyCC_Kuo	Suppress WWAN BB noise.	Pop PC751,PR760,PC725,PR731, PC745,PR751(680pF 0603, 4.7 ohm 1206)	X01
5	45	+5V/3.3V	8/4	Compal	DFX concern, choke change from 10*10 to 7*7	PL101 change from 3.3u 10*10 to 2.2u 7*7 PL102 change from 3.3u 10*10 to 3.3u 7*7	X01
6	45 46	+5V/3.3V +1.5V_MEN	8/4	Compal	COS concern, change from D2 Polymer cap to OScon cap	PC110,PC111 change from 220u polymer cap to 220u OScon cap PC208 change from 330u polymer cap to 390u OScon cap	X01
7	45 46	+5V/3.3V +1.5V_MEN	8/4	Compal	Prevent Jitter issue.	Add PC120,PC121,PC215 parallel with PR101,PR102,PR207	X01
8	51	Vcore/GFX core	8/4	Compal	Prevent output voltage glitch when power up.	PU700 VCCP and VDD change form +5V_RUN to +5V_ALW	X01
9	51,52 45	Vcore, Charger +5V/3.3V	8/8	Compal Justin_Hsu	EMI solution.	Pop PL700.PL1300,PL100	X01
10	45 46	+5V/3.3V +1.5V_MEN	8/8	Compal JimmyCC_Kuo	Suppress WWAN BB noise.	Pop PR109,PC112,PR110,PC113,PC209,PR203 (680pF 0603, 4.7 ohm 1206)	X01
11	47,48 49	+1.8V/+1.05VM +1.05V_VTT	8/8	Compal JimmyCC_Kuo	Suppress WWAN BB noise.	Pop PR301(0805),PC305,PR404,PC408,PR504, PC508(680pF 0603, 4.7 ohm 1206)	X01
12	45	+5V/3.3V	8/10	Compal JimmyCC_Kuo	Suppress WWAN BB noise.	Add PC122,PC123 on +5V_ALWP and +3.3V_ALWP	X01
13	45-53		11/16	Compal	For cost saving, change the 0ohm resistors to layout short PAD.	Footprint change PR100,PR116,PR208,PR210, PR306,PR403,PR503,PR508,PR513,PR600,PR607, PR612,PR602,PR604,PR714,PR726,PR713,PR721, PR723,PR1300,PR1302,PR1312,PR1320,PR1339, PR1342,PR911,PR925,PR937,PR941,PR932,PR936, PR926,PR935,PR945,PR947,PR949,PR939,PR940, PR943,PR948,PR951,PR955,PR957,PR961,PR953, PR954,PR956,PR958,PR959,PR960,PR963	X02
14	44	DCIN	11/30	Compal	Reduce power consumption in S5.	Add PCH_ALW_ON for +PWR_SRC_S enable signal.	X02

DELL CONFIDENTIAL/PROPRIETARY

THIS SHEET OF ENGINEERING DRAWING IS THE PROPRIETARY PROPERTY OF COMPAL ELECTRONICS, INC. AND CONTAINS CONFIDENTIAL AND TRADE SECRET INFORMATION. THIS SHEET MAY NOT BE TRANSFERED FROM THE CUSTODY OF THE COMPETENT DIVISION OF R&D DEPARTMENT EXCEPT AS AUTHORIZED BY COMPAL ELECTRONICS, INC. NEITHER THIS SHEET NOR THE INFORMATION IT CONTAINS MAY BE USED BY OR DISCLOSED TO ANY THIRD PARTY WITHOUT PRIOR WRITTEN CONSENT OF COMPAL ELECTRONICS, INC.

Version Change List (P. I. R. List) Page 1

Item	Page #	Title	Date	Request Owner	Issue Description	Solution Description	Rev.
1	51	VCORE/GFXcore	12/09	Compal	Fine tune load line,OCP,transient response.	PR740 change from 2K to 2.1K ohm. PC740 change from 0.033uF to 0.082uF. PR750 change from 348 to 365 ohm. PC707 change from 0.022uF to 0.1uF. PR711 change from 357 to 412 ohm. PR702 change from 2.55k to 3.32K ohm.	X02

THIS SHEET OF ENGINEERING DRAWING IS THE PROPRIETARY PROPERTY OF COMPAL ELECTRONICS, INC. AND CONTAINS CONFIDENTIAL AND TRADE SECRET INFORMATION. THIS SHEET MAY NOT BE TRANSFERED FROM THE CUSTODY OF THE COMPETENT DIVISION OF R&D DEPARTMENT EXCEPT AS AUTHORIZED BY COMPAL ELECTRONICS, INC. NEITHER THIS SHEET NOR THE INFORMATION IT CONTAINS MAY BE USED BY OR DISCLOSED TO ANY THIRD PARTY WITHOUT PRIOR WRITTEN CONSENT OF COMPAL ELECTRONICS, INC.

Version Change List (P. I. R. List)

Item	Page#	Title	Date	Request Owner	Issue Description	Solution Description	Rev.
1	42	HW	07/11/2011	COMPAL	E4 uses SIO_SLP_S4# for power control	DDR_ON and SUS_ON are replaced by SIO_SLP_S4#	X01
2	14,39	HW	07/11/2011	COMPAL	SMSC request to delete LPC_LDRQ0#	Leave LDRQ0# no connection on both of 5048 and PCH side	X01
3	11	HW	07/11/2011	COMPAL	Follow INTEL DG	Change RC99, RC100 from SD034100A8L (S RES 1/16W 10 +-1% 0402) to SD03410008L (S RES 1/16W 100 +-1% 0402)	X01
4	24	HW	07/11/2011	COMPAL	ATG needs touch screen circuit	Add "5@" for touch screen circuit of Dalmore 14" ATG	X01
5	22	HW	07/11/2011	COMPAL	UMA uses EMC4021 for cost concern	Change thermal sensor to EMC4021 for UMA	X01
6	42	HW	07/14/2011	COMPAL	Load SW sources output rising time mismatch and COS. cost concern	Change back to E3 +3.3V/5V_RUN discrete solution	X01
7	20	HW	07/14/2011	COMPAL	CH94 and CH95 to D2 size for cost concern	Change CH94 and CH95 from SGA0000170L to SGA00004L0L	X01
8	29	HW	07/19/2011	COMPAL	Codec is change to 92HD93	Pop R162~R166 and de-pop U73	X01
9	20,42	HW	07/21/2011	COMPAL	Vgs less than cut-in voltage in battery mode	Add control circuit for +5V_ALW_PCH	X01
10	27,28,42	HW	07/25/2011	COMPAL	Vgs of 5V MOS maybe large than max rating	Add R516, R517. Change Q55 from SB00000KQ0L to SB00000GV00	X01
11	11	HW	07/25/2011	COMPAL	Follow INTEL PDDG 0.8	De-pop RC140	X01
12	32	HW	07/25/2011	COMPAL	RESET_OUT# power sequence issue	Add R1640, 1M ohms pull down for USH_PWR_STATE# at M/B side	X01
13	15	HW	07/25/2011	COMPAL	Follow crystal measurement report	Change CH18 and CH19 to 8.2pF	X01
14	40	HW	07/27/2011	COMPAL	Change board ID to X01	Change R875 to 130Kohms	X01
15	34	HW	07/27/2011	COMPAL	PCH GPIO52 need 8.2~10K pull up +3.3VS	Change R695 from 100K to 10Kohms	X01
16	23	HW	07/28/2011	COMPAL	CRT SW 2nd source TI, TS3V713 pin29 is VDD	Connect pin29 to +3.3V_RUN	X01
17	16	HW	07/28/2011	COMPAL	+1.05V_M turn off before APWROK de-assert	Add UH5 circuit for HW solution	X01
~~18~~	~~29~~	~~HW~~	~~08/01/2011~~	~~COMPAL~~	~~Co-lay 92HD93 with ALC290~~	~~Pop option for 92HD93/ALC290=>R1646/C1164; R1644/R1643; C965/R1642; Q107/R171 Reserve for ALC290 only: C1204, C1205, R1647, C1165, R1648 Reserve for 92HD93 only: R1645, C963~~	~~X01~~
19	41	HW	08/02/2011	COMPAL	Reset IC threshold voltage issue	Change U4 to RT9801A (threshold adjustable)	X01
20	29	HW	08/02/2011	COMPAL	EMI request to add solution for BITCLK	Pop R1076 (33ohms) and C977 (10pF) for PCH_AZ_CODEC_BITCLK	X01
21	26	HW	08/03/2011	COMPAL	DPX_CA_DET voltage too low through dongle	Change U21 and U24 to SA000055G0L	X01
22	17	HW	08/03/2011	COMPAL	Request from INTEL review feedback	Pop RH332 for PCH_GPIO3	X01

DELL CONFIDENTIAL/PROPRIETARY

PROPRIETARY NOTE: THIS SHEET OF ENGINEERING DRAWING AND SPECIFICATIONS CONTAINS CONFIDENTIAL TRADE SECRET AND OTHER PROPRIETARY INFORMATION OF DELL INC. ("DELL") THIS DOCUMENT MAY NOT BE TRANSFERRED OR COPIED WITHOUT THE EXPRESS WRITTEN AUTHORIZATION OF DELL. IN ADDITION, NEITHER THIS SHEET NOR THE INFORMATION IT CONTAINS WAY BE USED BY OR DISCLOSED TO ANY THIRD PARTY WITHOUT DELL'S EXPRESS WRITTEN CONSENT.

Version Change List (P. I. R. List)

Item	Page#	Title	Date	Request Owner	Issue Description	Solution Description	Rev.
23	42,43	HW	08/04/2011	COMPAL	For cost saving	Change Q61 to SB00000GV00; HDD and breath LED control share Q84; Power team request Q59 change to SB00000L80L	X01
24	24, 29, 33	HW	08/08/2011	COMPAL	EMI request to add solution	Pop RE678 (22ohms), CE757 (33pF) and C981~3 (0.1uF). Add CE758 (33pF). Reserve C1206 and C1207.	X01
25	41	HW	08/08/2011	COMPAL	For RSMRST# debug	Reserve R1655 and pop R1623	X01
26	39	HW	08/08/2011	COMPAL	RF request to add solution	Pop R795 (33ohms), C713 (32pF), RE5 (33ohms), CE3 (32pF), R885 (10ohms) and C747 (8.2pF)	X01
27	43	HW	08/08/2011	COMPAL	White light LED brightness is abnormal	Change R934, R938, R939, R949, R958, R957 and R955 to 2.2 Kohms	X01
28	40	HW	08/09/2011	COMPAL	ESD request add 0.1uF on ALWON	Reserve C1208 for ESD backup plan	X01
29	17	HW	08/10/2011	COMPAL	RF request 10pF on MEC and 5048 PCI CLK	Reserve 10pF bypass cap. at CH109 and CH110	X01
30	18	HW	08/11/2011	COMPAL	Delete TCM and Non-TPM configuration	De-pop RH270 and RH271. Always pop RH267 and RH268	X01
31	11	HW	08/12/2011	COMPAL	S3 can't resume issue	Control 1.5V_VDDQ by EC. Pop RC79 and de-pop RC82	X01
32	40	HW	08/15/2011	COMPAL	Change board ID to X02	Change R875 to 62Kohms	X02
~~33~~	~~14~21~~	~~HW~~	~~08/15/2011~~	~~COMPAL~~	~~Change PCH to B0 version~~	~~Change UH4 to SA00004NQ2L~~	~~X02~~
34	42	HW	08/18/2011	COMPAL	Rated Vgs of Q61 is 25V	De-pop R1627	X02
35	36	HW	08/19/2011	COMPAL	Follow INTEL DG	Change C410~C413 from 0.01uF to 0.1uF	X02
36	19	HW	08/19/2011	COMPAL	CRT ripple garbage display issue	Change LH1 from 180ohms bead to 1uH inductor	X02
37	29	HW	08/29/2011	COMPAL	IDT request and codec version change	Change C1163 from 1uF to 2.2uF and codec from WA to WB version	X02
~~38~~	~~43~~	~~HW~~	~~08/29/2011~~	~~COMPAL~~	~~To meet current limit resistor of LED spec~~	~~Change R949, R958, R957, R955, R939, R938, R934 from 2.2K to 1.2Kohms~~	~~X02~~
~~39~~	~~42~~	~~HW~~	~~09/02/2011~~	~~COMPAL~~	~~DMN3030LSS-13 poor soldering issue~~	~~Change Q55 and Q61 to AO4478L~~	~~X02~~
40	39	HW	09/02/2011	COMPAL	SMSC change 5048 pin A23 to GPIOI0	Re-link ECE 5048 symbol	X02
~~41~~	~~25~~	~~HW~~	~~09/14/2011~~	~~COMPAL~~	~~HDMI EMI low cost solution~~	~~De-pop L19~L22. Add L100~107 (9nH) and C1209~C1216 (3.3pF)~~	~~X02~~
42	40	HW	09/14/2011	COMPAL	SMSC review feedback	Add R1656 and R1657 100Kohms to GND for I2S disabled	X02
43	29	HW	09/16/2011	COMPAL	Remove ALC290 co-lay circuit	Remove R1648, R1647, R1646, R1645, C1165, C1164, R1643, R1644, R1642, R171, C1204, C1205	X02
44	29	HW	09/16/2011	COMPAL	15" UMA speaker no sound issue	Add snubber on speaker trace with C: 2200pF and R: 3.3ohms. Change bead rated current from 200mA to 2A.	X02
45	33	HW	09/26/2011	COMPAL	EMI request to change SD CLK series R	R676 is changed from 33ohms to 10ohms	X02
~~46~~	~~42~~	~~HW~~	~~09/26/2011~~	~~COMPAL~~	~~1V leakage on +3.3V_RUN during system boot~~	~~Pop Q69 and R929 discharge circuit~~	~~X02~~
47	40	HW	09/26/2011	COMPAL	EC has internal pull up for volume signals	De-pop R1169, R1197 and R1118	X02

DELL CONFIDENTIAL/PROPRIETARY

PROPRIETARY NOTE: THIS SHEET OF ENGINEERING DRAWING AND SPECIFICATIONS CONTAINS CONFIDENTIAL TRADE SECRET AND OTHER PROPRIETARY INFORMATION OF DELL INC. ("DELL") THIS DOCUMENT MAY NOT BE TRANSFERRED OR COPIED WITHOUT THE EXPRESS WRITTEN AUTHORIZATION OF DELL. IN ADDITION, NEITHER THIS SHEET NOR THE INFORMATION IT CONTAINS WAY BE USED BY OR DISCLOSED TO ANY THIRD PARTY WITHOUT DELL'S EXPRESS WRITTEN CONSENT.

Version Change List (P. I. R. List)

Item	Page#	Title	Date	Request Owner	Issue Description	Solution Description	Rev.
~~48~~	~~42~~	~~HW~~	~~09/28/2011~~	~~COMPAL~~	~~INTEL timing spec, V2 fail~~	~~Change C763 to 470pF as that of +3.3V_RUN~~	~~X02~~
49	41	HW	10/05/2011	COMPAL	Chane reset IC to RT9818A-44GU3	Update U4 symbol and add R1629 for backup of inrush prevention. Change RSMRST# pull up with 100Koms. Pop R1655 and de-pop R1623.	X02
50	39	HW	10/05/2011	COMPAL	When suspend/resume cycles, wireless SW GPIO IRQs keeps giving	Add R771 pulling up to +3.3V_ALW for WIRELESS_ON#/OFF and de-pop R766	X02
51	19	HW	10/11/2011	COMPAL	CRT ripple garbage display issue	Change CH36 from 10uF to 22uF	X02
52	7~42	HW	10/11/2011	COMPAL	For cost saving	Change 0 ohm resistor to short pad	X02
53	29	HW	10/11/2011	COMPAL	Change C973~C976 P/N and R1658~R1661 size	Change C973~C976 P/N to SE074222K8L. Change R1658~R1661 size to 0402.	X02
~~54~~	~~42~~	~~HW~~	~~10/18/2011~~	~~COMPAL~~	~~+3.3V_SUS sequence timing probelm~~	~~Change C767 to 470pF, the same as that of +3.3V_RUN~~	~~X02~~
55	22	HW	10/18/2011	COMPAL	Thermal requests to change OTP from 88 to 93	Change R406 from 953ohms to 1.24Kohms	X02
~~56~~	~~43~~	~~HW~~	~~10/20/2011~~	~~COMPAL~~	~~BREATH LED flash issue when AC plugin~~	~~Add Q126 to control BREATH LED~~	~~X02~~
57	32	HW	10/24/2011	COMPAL	TPM is changed to AT97SC3204-X2A18-AB	U39(TPM) is changed to SA00004WQ10(AT97SC3204-X2A18-AB) for WIN8 support	X02
58	42	HW	10/25/2011	COMPAL	+3.3/5V_RUN inrush curren issue with 470pF	Change C763 and C766 form 470pF to 2200pF	X02
59	33	HW	10/25/2011	COMPAL	EMI change to reserve solution for SD/MMCCLK	De-pop RE678 and CE757	X02
60	34	HW	11/04/2011	COMPAL	PCH GPIO52 changed to be free	De-pop R725, remove R695 and add RH359	X02
61	17,39,40	HW	11/07/2011	COMPAL	RF final solution for PCI clock noise	De-pop R795, C713, R885 and C747. Pop CH109 and CH110 with 12pF	X02
62	43	HW	11/07/2011	COMPAL	Change current limit resistors of LED	R949 from 2.2K to 1K, R939 from 2.2K to 1.8K, R957 from 2.2K to 220, R951 from 475 to 330, R953 from 475 to 330 and R958 from 2.2K to 620	X02
~~67~~	~~14~21~~	~~HW~~	~~11/07/2011~~	~~COMPAL~~	~~Change PCH to C0 version~~	~~Change UH4 to SA00005BU0L~~	~~X02~~
68	11,42	HW	11/07/2011	COMPAL	AO4728L leakage issue	Change QC3 and Q59 to AO4304L (SB00000RV00)	X02
69	32	HW	11/07/2011	COMPAL	+3.3V_RUN Giltch when AC plugin	Add R1662 0ohm resistor. Reserve D87 and R1663 (pull high to +3.3V_RUN_TPM) for HW solution backup.	X02
70		HW	11/07/2011	COMPAL	Change 1Kohms tolerance for cost saving	Change 1Kohms +-1% to +-5% except RC78, RC80, RC81 and RC84	X02
71	38	HW	11/11/2011	COMPAL	EMI request to add 33ohms for DP port	Add RE7~RE24 for DP portD and portC	X02
72		HW	11/16/2011	COMPAL	Change RC value at Gate of MOS Load SW to modify power rail soft start timing	RC72 from 100K to 330K; RC143 from 330K to 1M; CC136 from 0.1u to 0.022u R412 from 100K to 470K; R1632 from 1M to 4.7M; C293 from 0.1u to 0.022u R507 from 100K to 470K; R517 from 1M to 4.7M; C400 from 0.1u to 0.022u R722 from 100K to 470K; R1625 from 1M to 4.7M; C644 from 4700p to 220p R729 from 100K to 470K; R1628 from 1M to 4.7M; C650 from 4700p to 220p R917 from 100K to 470K; R1617 from 1M to 4.7M; C770 from 4700p to 220p R920 from 100K to 470K; R1610 from 470K to 2.2M; C771 from 4700p to 470p R930 from 100K to 470K; R1611 from 470K to 2.2M; C773 from 2200p to 100p R906 from 100K to 470K; C763 from 2200p to 220p R912 from 100K to 470K; C766 from 470p to 220p	X02

DELL CONFIDENTIAL/PROPRIETARY

PROPRIETARY NOTE: THIS SHEET OF ENGINEERING DRAWING AND SPECIFICATIONS CONTAINS CONFIDENTIAL TRADE SECRET AND OTHER PROPRIETARY INFORMATION OF DELL INC. ("DELL") THIS DOCUMENT MAY NOT BE TRANSFERRED OR COPIED WITHOUT THE EXPRESS WRITTEN AUTHORIZATION OF DELL. IN ADDITION, NEITHER THIS SHEET NOR THE INFORMATION IT CONTAINS WAY BE USED BY OR DISCLOSED TO ANY THIRD PARTY WITHOUT DELL'S EXPRESS WRITTEN CONSENT.

Version Change List (P. I. R. List)

Item	Page#	Title	Date	Request Owner	Issue Description	Solution Description	Rev.
73	36	HW	11/21/2011	COMPAL	ESD team modify USB3.0 ESD diode package	Change D78 and D79 to NXP IP4292CZ10-TBR(SC300002F0L, Package: XSON10)	X02
74	42	HW	11/21/2011	COMPAL	Change RC value at Gate of MOS Load SW to modify power rail soft start timing	R930 from 470K to 330K; R1611 form 2.2M to 1M	X02
75	36	HW	11/23/2011	COMPAL	Add USB PWR SW circuit with G547 for JUSB2	Add single channel USB PWR SW U5, G547. Add decoupling cap. C677 and C678 for SW IC input. Add decoupling cap. C652 and C655 at conn. side.	X02
~~76~~	~~38~~	~~HW~~	~~11/29/2011~~	~~COMPAL~~	~~EMI solution for E-Docking USB (port8)~~	~~Add bypass resistors, R1672 and R1673; choke L99 for backup~~	~~X02~~
77	35	HW	11/30/2011	COMPAL	From ESD team request	Pop C1208 for UMA trace, ALWON Add CE10~CE12 for EXP PWR SW signals, CPUSB#, EXPRCRD_CPPE# and CARD_RESET# Add 0ohm resistors, RE27~RE32 and RE34~RE36 to block ESD from XDP	X02
78	17,34,38	HW	12/02/2011	COMPAL	EMI solution for E-Docking USB port	Swap USB Port6 and Port8; reserve a 90ohms choke at E-Docking conn.: Port6 from Mini3 Pink Panther card to E-docking Port8 from E-Docking to Mini3 Pink Panther card	X02
79	14~21	HW	12/05/2011	COMPAL	Change PCH to C1 version (QS)	Change UH4 to SA00005BU1L	X02
80	24	HW	12/06/2011	COMPAL	EMI solution for USB port12 of camera	Pop 90ohms choke, L10; De-pop R427 and R428	X02
81	42	HW	12/07/2011	COMPAL	+3.3V_SUS sequence timing	R911 from 100K to 470K; R1618 from 1M to 4.7M; C767 from 470p to 220p	X02
82	43	HW	12/07/2011	COMPAL	Add EMI solution	Add C1217 with 0.1uF	X02
83	25	HW	12/08/2011	COMPAL	EMI final solution for HDMI port	Pop L100~L107 with 9nH. Change C1209~C1216 from 3.3pF to 1.8pF. Change R450, R452~R456 and R458~R459 from 680ohms to 604ohms.	X02
84	41	HW	12/08/2011	COMPAL	To prevent inrush current at reset IC input	Change R1629 from 0ohms to 33ohms resistor	X02
85	25	HW	12/28/2011	COMPAL	SMT request to change F2 footprint	For DFX conern of F2 2nd source, SP040003H0L, change F2 footprint to F_MF-MSMF050-2	X02
86	40	HW	01/13/2012	COMPAL	Change board ID to A00	Change R875 to 33Kohms	A00
87	14	HW	01/13/2012	COMPAL	Add X76@ for ROM part	Add X76@ for U52 and U53	A00
88	40	HW	01/13/2012	COMPAL	Change MEC5055 P/N for MP	Change U51 P/N to SA00003TZ2L	A00
89	38	HW	01/13/2012	COMPAL	System hangs after hot dock (DF531758)	Change R755 from 100Kohms to 10Kohms	A00
90	14~21,32	HW	02/01/2012	COMPAL	Chnage PCH, LAN chip P/N for X-build	UH4 is changed to SA00005BU3L U31 is changed to SA00003SI5L	A00
~~91~~	~~31~~	~~HW~~	~~02/01/2012~~	~~COMPAL~~	~~Change PWR button, SW1 back to E3 solution~~	~~change SW1 back to E3 solution, ALPS SKRBAAE010~~	~~A00~~
92	15,18,32	HW	02/03/2012	COMPAL	Add BOM config for Non-TPM	Add 1@ for TPM and 2@ for Non-TPM config	A00
93	14	HW	02/16/2012	COMPAL	De-pop resistor on PCH JTAG for power saving	De-pop RH288, RH47, RH48 and RH49	A00
94	33	HW	02/20/2012	COMPAL	For SD card reader and KB ESD issue	Add 47nF CE13 close to reset input of SD card reader IC Add 100pF CE14 close to U4.3	A00
95	36	HW	02/24/2012	COMPAL	Samsung cell phone can't support CDP	Change charging mode to SDP only in S0 Add Q126 and change R1614 to 100Kohms (reserve this solution and R1614 10kohms)	A00

DELL CONFIDENTIAL/PROPRIETARY

PROPRIETARY NOTE: THIS SHEET OF ENGINEERING DRAWING AND SPECIFICATIONS CONTAINS CONFIDENTIAL TRADE SECRET AND OTHER PROPRIETARY INFORMATION OF DELL INC. ("DELL") THIS DOCUMENT MAY NOT BE TRANSFERRED OR COPIED WITHOUT THE EXPRESS WRITTEN AUTHORIZATION OF DELL. IN ADDITION, NEITHER THIS SHEET NOR THE INFORMATION IT CONTAINS WAY BE USED BY OR DISCLOSED TO ANY THIRD PARTY WITHOUT DELL'S EXPRESS WRITTEN CONSENT.

Version Change List (P. I. R. List)

Item	Page #	Title	Date	Request Owner	Issue Description	Solution Description	Rev.
96	36	HW	02/24/2012	COMPAL	Samsung cell phone can't support CDP	Change U2 to Seligo SA00004VH00	A00
97	41	HW	02/24/2012	COMPAL	Pericom IC fail	Change U4 to Richtek SA00005A60L	A00

DELL CONFIDENTIAL/PROPRIETARY

PROPRIETARY NOTE: THIS SHEET OF ENGINEERING DRAWING AND SPECIFICATIONS CONTAINS CONFIDENTIAL TRADE SECRET AND OTHER PROPRIETARY INFORMATION OF DELL INC. ("DELL") THIS DOCUMENT MAY NOT BE TRANSFERRED OR COPIED WITHOUT THE EXPRESS WRITTEN AUTHORIZATION OF DELL. IN ADDITION, NEITHER THIS SHEET NOR THE INFORMATION IT CONTAINS WAY BE USED BY OR DISCLOSED TO ANY THIRD PARTY WITHOUT DELL'S EXPRESS WRITTEN CONSENT.

www.s-manuals.com