Compal Confidential

Schematics Document

INTEL AUBURNDALE with IBEX core logic

Cartier UMA

LA-4902P

2009-12-07

REV:1.0

Security Classification	Compal Secret Data		
Issued Date	2008/09/15	Deciphered Date	2009/12/31

THIS SHEET OF ENGINEERING DRAWING IS THE PROPRIETARY PROPERTY OF COMPAL ELECTRONICS, INC. AND CONTAINS CONFIDENTIAL AND TRADE SECRET INFORMATION. THIS SHEET MAY NOT BE TRANSFERRED FROM THE CUSTODY OF THE COMPETENT DIVISION OF R&D DEPARTMENT EXCEPT AS AUTHORIZED BY COMPAL ELECTRONICS, INC. NEITHER THIS SHEET NOR THE INFORMATION IT CONTAINS MAY BE USED BY OR DISCLOSED TO ANY THIRD PARTY WITHOUT PRIOR WRITTEN CONSENT OF COMPAL ELECTRONICS, INC.

Compal Electronics, Inc.

Title: *Cover Sheet*

Size: Custom | Document Number: *LA-4902P* | Rev: 0.3

Date: Monday, December 14, 2009 | Sheet 1 of 47

hexainf@hotmail.com

Compal Confidential

Cartier UMA

File Name : LA-4902P

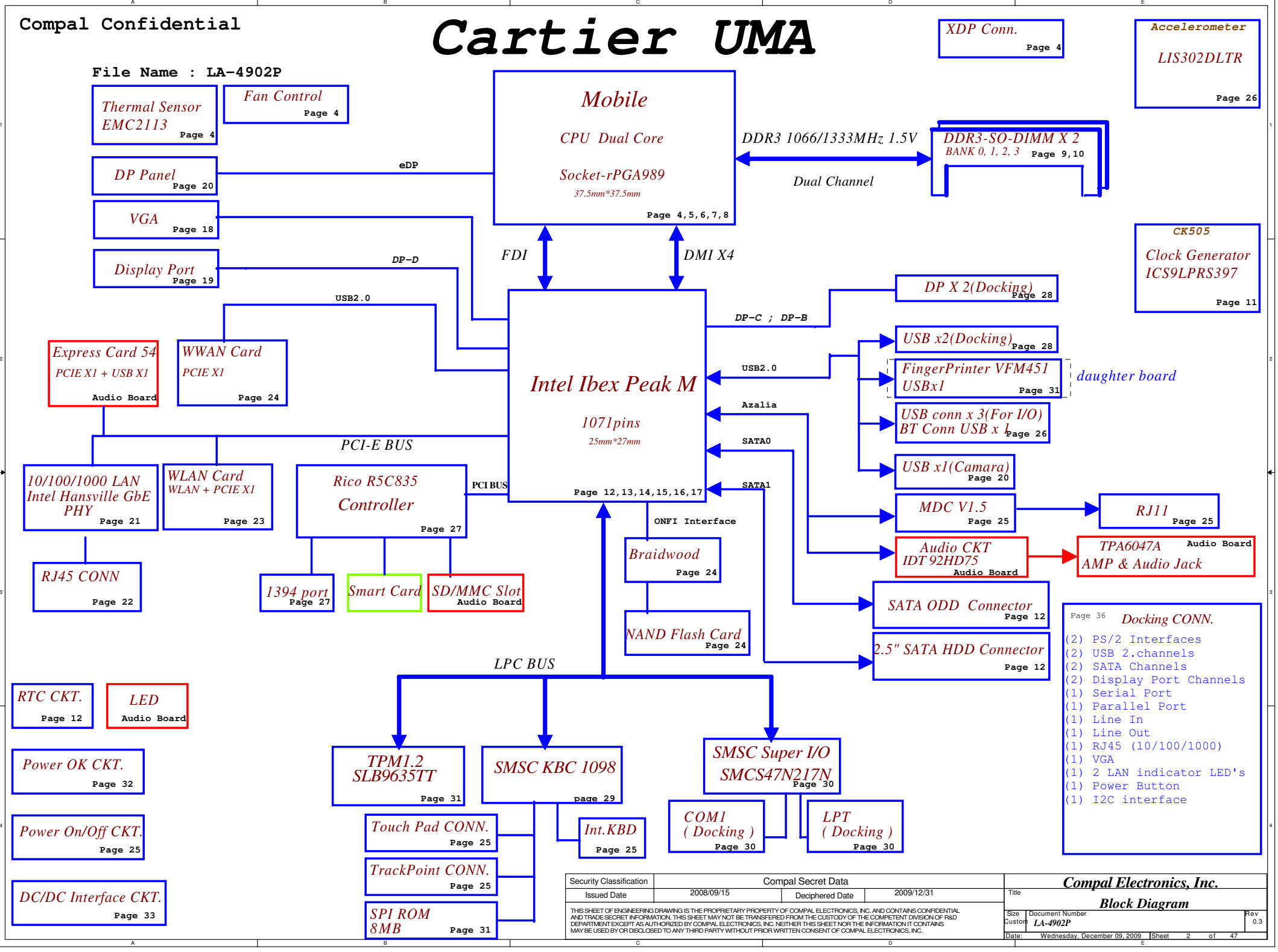

Security Classification	Compal Secret Data		
Issued Date	2008/09/15	Deciphered Date	2009/12/31

THIS SHEET OF ENGINEERING DRAWING IS THE PROPRIETARY PROPERTY OF COMPAL ELECTRONICS, INC. AND CONTAINS CONFIDENTIAL AND TRADE SECRET INFORMATION. THIS SHEET MAY NOT BE TRANSFERRED FROM THE CUSTODY OF THE COMPETENT DIVISION OF R&D DEPARTMENT EXCEPT AS AUTHORIZED BY COMPAL ELECTRONICS, INC. NEITHER THIS SHEET NOR THE INFORMATION IT CONTAINS MAY BE USED BY OR DISCLOSED TO ANY THIRD PARTY WITHOUT PRIOR WRITTEN CONSENT OF COMPAL ELECTRONICS, INC.

Compal Electronics, Inc.

Title: **Block Diagram**

Size: Custom | Document Number: LA-4902P | Rev: 0.3

Date: Wednesday, December 09, 2009 | Sheet 2 of 47

Voltage Rails

(O MEANS ON X MEANS OFF)

State \ power plane	+RTCVCC	+B +3VL	+5VALW +3VALW	+3VM +1.05VM	+1.5V +0.75V	+5VS +3VS +1.5VS +VCCP +CPU_CORE +1.05VS +1.8VS
S0	O	O	O	O	O	O
S1	O	O	O	O	O	O
S3	O	O	O	O	O	X
S5 S4/AC	O	O	O	O	X	X
S5 S4/ Battery only	O	O	X	X	X	X
S5 S4/AC & Battery don't exist	O	X	X	X	X	X

Symbol Note :

: means Digital Ground

: means Analog Ground

@ : means just reserve , no build
CONN@ : means ME part.

Install below 45 level BOM structure for ver. 0.1

45@ : means just put it in the BOM of 45 level.

Install below 43 level BOM structure for ver. 0.1

DEBUG@ : means just build when PCIE port 80 CARD function enable. *Remove before MP*

N10M@ : Install for N10M Graphic controller

1098@ : Install for 1098 KBC controller

Reserve below BOM structure for ver. 0.1

1091@ : Install for 1091 KBC controller

SMBUS Control Table

	SOURCE	BATT	XDP	SODIMM	CLK CHIP	MINI CARD	DOCK	NIC	THERMAL SENSOR	G-SENSOR
SMB_EC_CK1 SMB_EC_DA1	SMSC1098	V	X	X	X	X	X	X	X	X
SMBCLK SMBDATA	Calpella	X	V	V	V	V	V	X	X	V
SML0CLK SML0DATA	Calpella	X	X	X	X	X	X	V	X	X
SML1CLK SML1DATA	Calpella	X	X	X	X	X	X	X	V	V

hexalnf@hotmail.com

THIS SHEET OF ENGINEERING DRAWING IS THE PROPRIETARY PROPERTY OF COMPAL ELECTRONICS, INC. AND CONTAINS CONFIDENTIAL AND TRADE SECRET INFORMATION. THIS SHEET MAY NOT BE TRANSFERED FROM THE CUSTODY OF THE COMPETENT DIVISION OF R&D DEPARTMENT EXCEPT AS AUTHORIZED BY COMPAL ELECTRONICS, INC. NEITHER THIS SHEET NOR THE INFORMATION IT CONTAINS MAY BE USED BY OR DISCLOSED TO ANY THIRD PARTY WITHOUT PRIOR WRITTEN CONSENT OF COMPAL ELECTRONICS, INC.

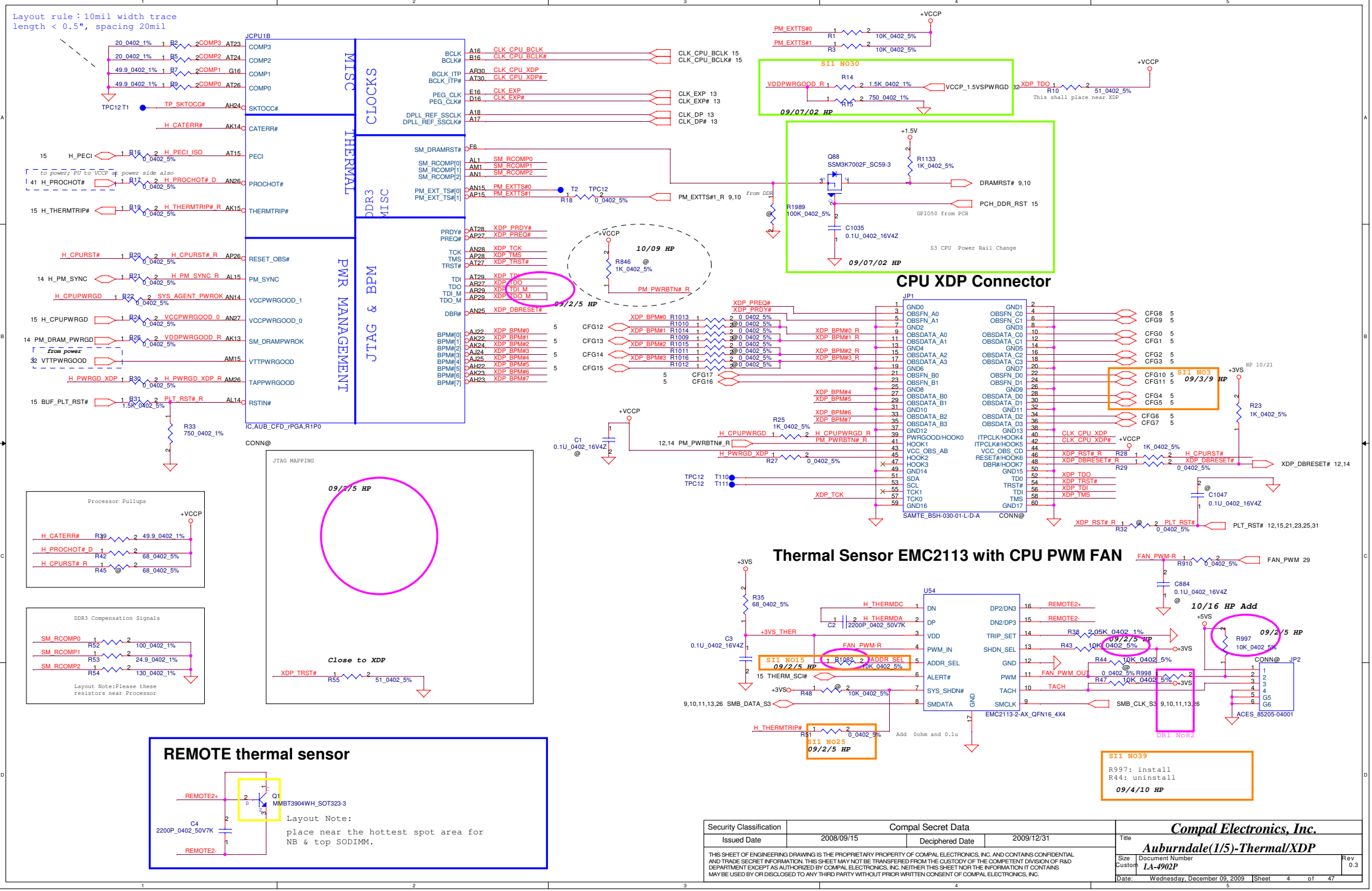
Layout rule：10mil width trace length < 0.5", spacing 20mil
JCPU1B
MISC
THERMAL
CLOCKS
DDR3 MISC
JTAG & BPM
PWR MANAGEMENT
CPU XDP Connector
JP1
SAMTE_BSH-030-01-L-D-A
Thermal Sensor EMC2113 with CPU PWM FAN
U54
EMC2113-2-AX_QFN16_4X4
JP2
ACES_85205-04001
Processor Pullups
DDR3 Compensation Signals
Layout Note:Please these resistors near Processor
JTAG MAPPING
Close to XDP
REMOTE thermal sensor
Q1
MMBT3904WH_SOT323-3
Layout Note:
place near the hottest spot area for NB & top SODIMM.
Security Classification
Compal Secret Data
Issued Date
2008/09/15
Deciphered Date
2009/12/31
Compal Electronics, Inc.
Auburndale(1/5)-Thermal/XDP
Size Custom
Document Number
LA-4902P
Rev 0.3
Date: Wednesday, December 09, 2009
Sheet 4 of 47

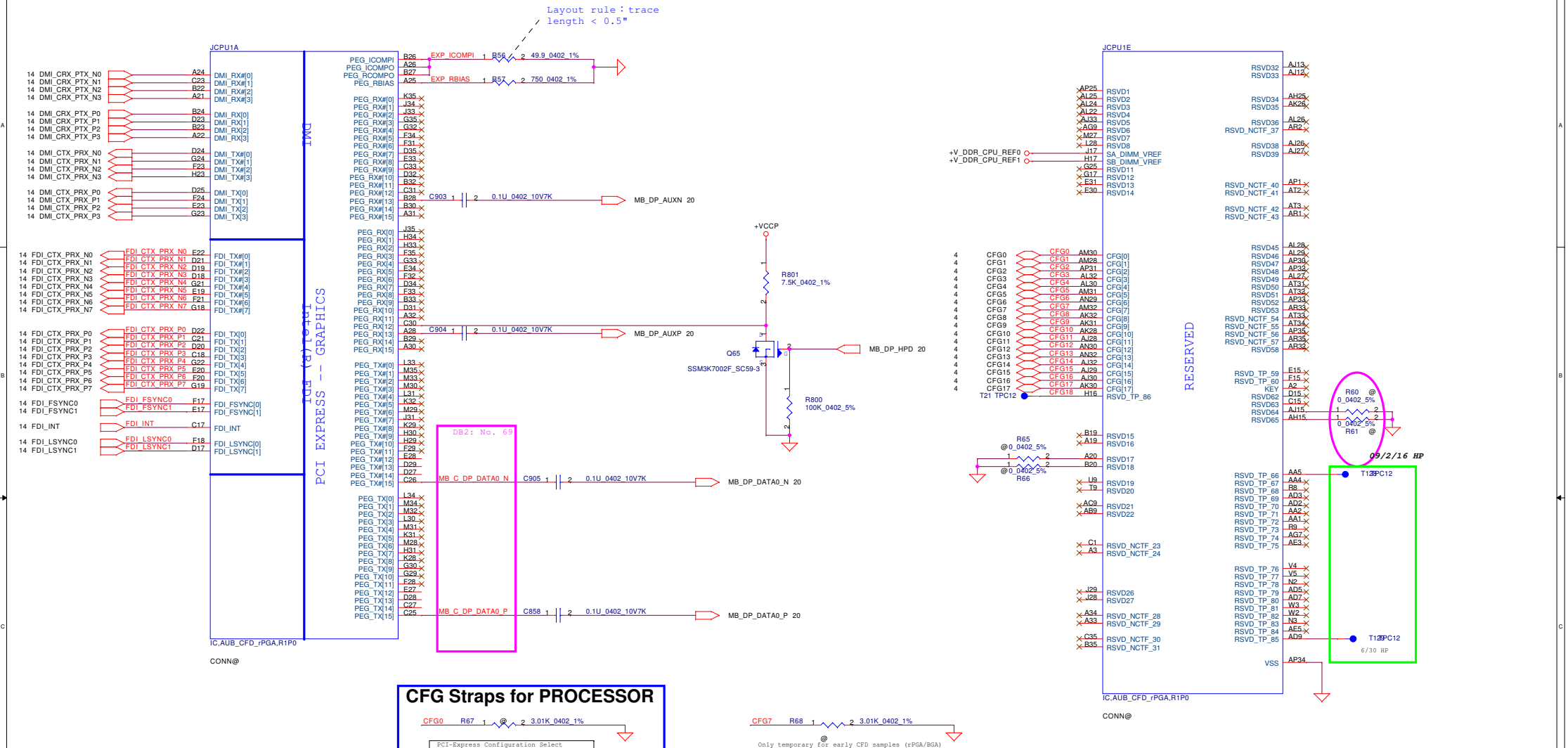

Security Classification	Compal Secret Data		
Issued Date	2008/09/15	Deciphered Date	2009/12/31

THIS SHEET OF ENGINEERING DRAWING IS THE PROPRIETARY PROPERTY OF COMPAL ELECTRONICS, INC. AND CONTAINS CONFIDENTIAL AND TRADE SECRET INFORMATION. THIS SHEET MAY NOT BE TRANSFERED FROM THE CUSTODY OF THE COMPETENT DIVISION OF R&D DEPARTMENT EXCEPT AS AUTHORIZED BY COMPAL ELECTRONICS, INC. NEITHER THIS SHEET NOR THE INFORMATION IT CONTAINS MAY BE USED BY OR DISCLOSED TO ANY THIRD PARTY WITHOUT PRIOR WRITTEN CONSENT OF COMPAL ELECTRONICS, INC.

Compal Electronics, Inc.

Title: **Auburndale(2/5)-DMI/PEG/FDI**

Size: Custom | Document Number: LA-4902P | Rev: 0.3

Date: Wednesday, December 09, 2009 | Sheet 5 of 47

hexainf@hotmail.com

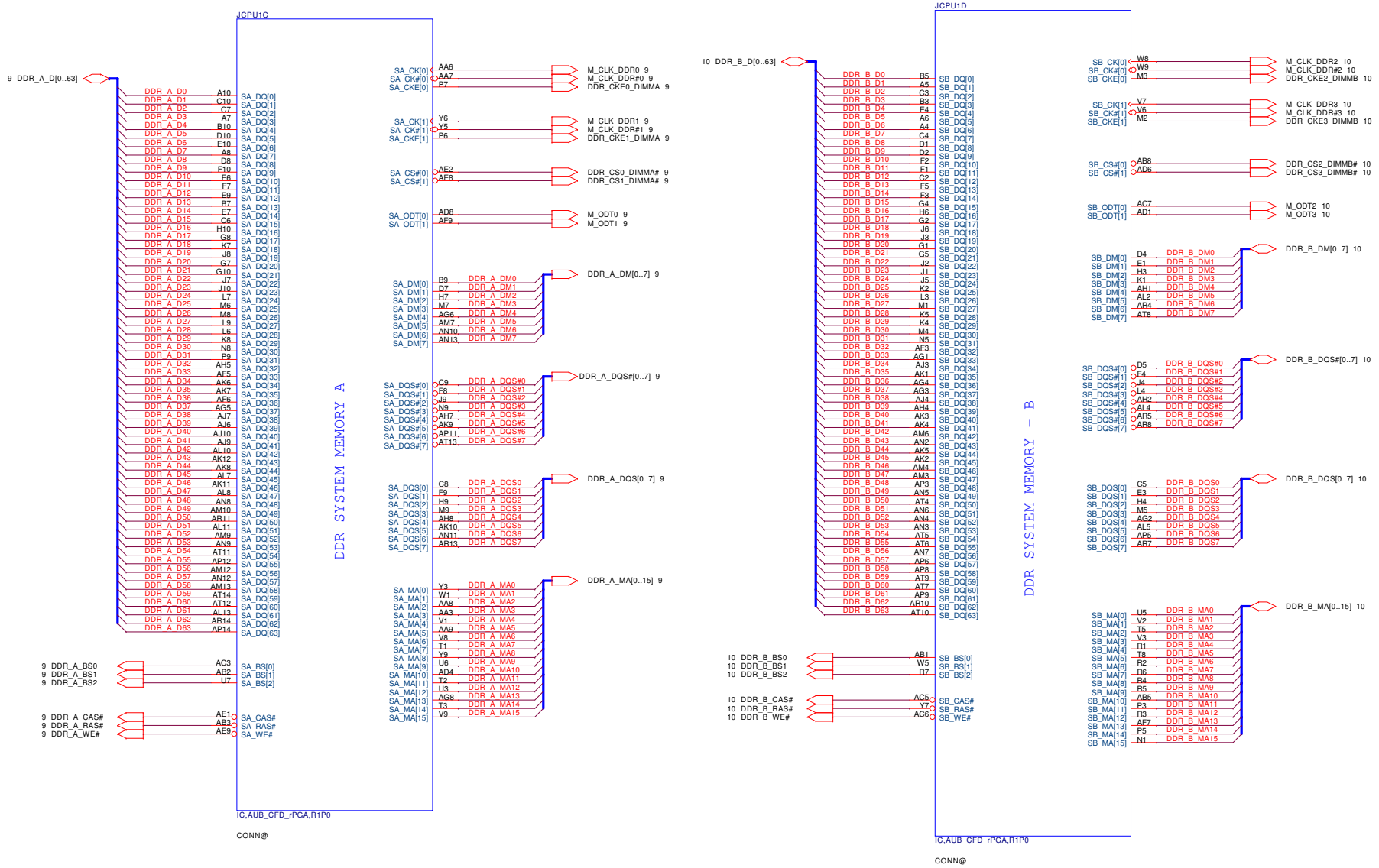

Security Classification	Compal Secret Data		
Issued Date	2008/09/15	Deciphered Date	2009/12/31

THIS SHEET OF ENGINEERING DRAWING IS THE PROPRIETARY PROPERTY OF COMPAL ELECTRONICS, INC. AND CONTAINS CONFIDENTIAL AND TRADE SECRET INFORMATION. THIS SHEET MAY NOT BE TRANSFERED FROM THE CUSTODY OF THE COMPETENT DIVISION OF R&D DEPARTMENT EXCEPT AS AUTHORIZED BY COMPAL ELECTRONICS, INC. NEITHER THIS SHEET NOR THE INFORMATION IT CONTAINS MAY BE USED BY OR DISCLOSED TO ANY THIRD PARTY WITHOUT PRIOR WRITTEN CONSENT OF COMPAL ELECTRONICS, INC.

Compal Electronics, Inc.

Title: **Auburndale(3/5)-DDR3**

Size: Custom | Document Number: LA-4902P | Rev: 0.3

Date: Wednesday, December 09, 2009 | Sheet 6 of 47

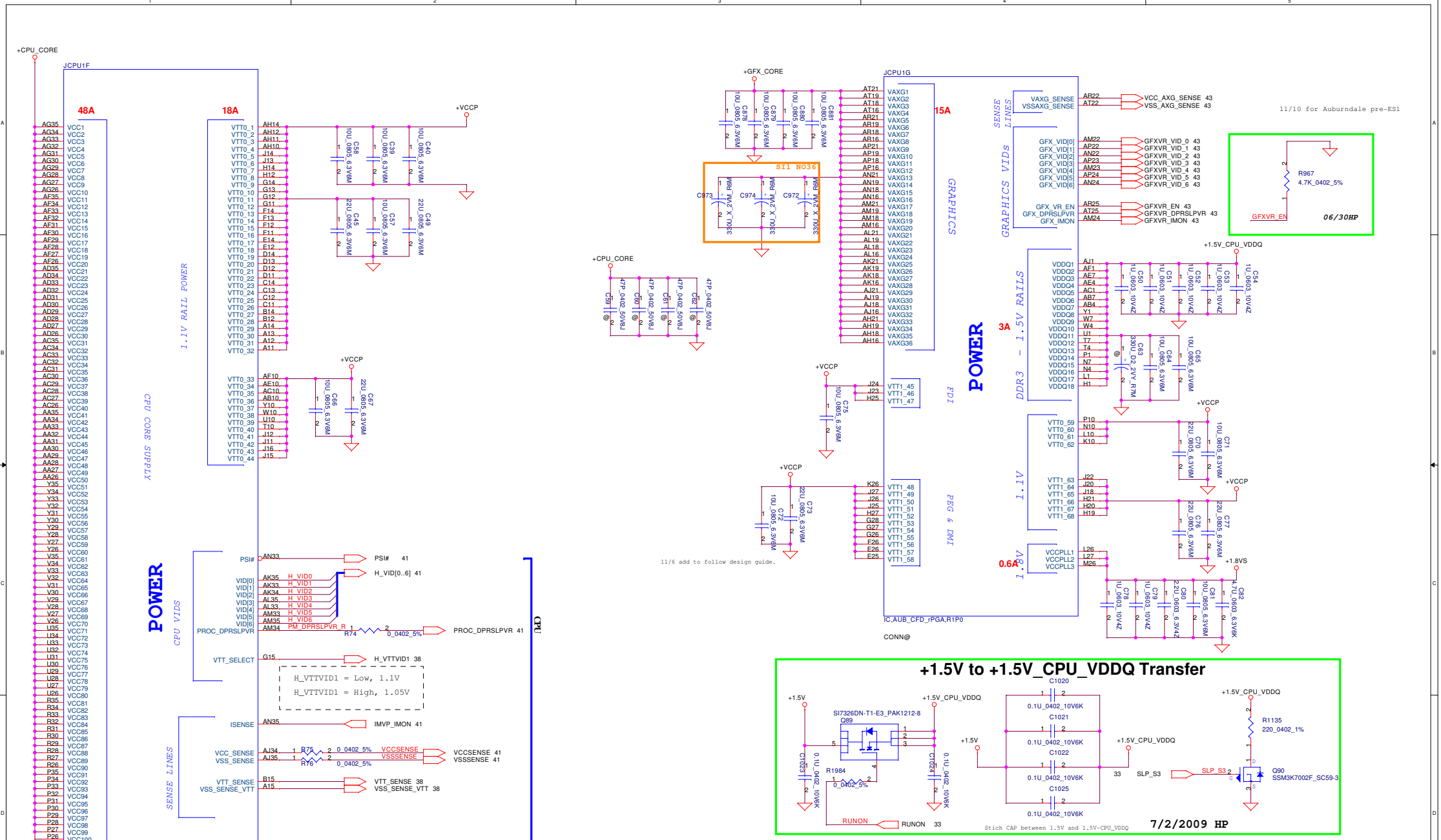

Security Classification	Compal Secret Data		
Issued Date	2008/09/15	Deciphered Date	2009/12/31

THIS SHEET OF ENGINEERING DRAWING IS THE PROPRIETARY PROPERTY OF COMPAL ELECTRONICS, INC. AND CONTAINS CONFIDENTIAL AND TRADE SECRET INFORMATION. THIS SHEET MAY NOT BE TRANSFERED FROM THE CUSTODY OF THE COMPETENT DIVISION OF R&D DEPARTMENT EXCEPT AS AUTHORIZED BY COMPAL ELECTRONICS, INC. NEITHER THIS SHEET NOR THE INFORMATION IT CONTAINS MAY BE USED BY OR DISCLOSED TO ANY THIRD PARTY WITHOUT PRIOR WRITTEN CONSENT OF COMPAL ELECTRONICS, INC.

Compal Electronics, Inc.

Title: **Auburndale(4/5)-PWR**

Size: Custom | Document Number: LA-4902P | Rev: 0.3

Date: Wednesday, December 09, 2009 | Sheet 7 of 47

hexainf@hotmail.com

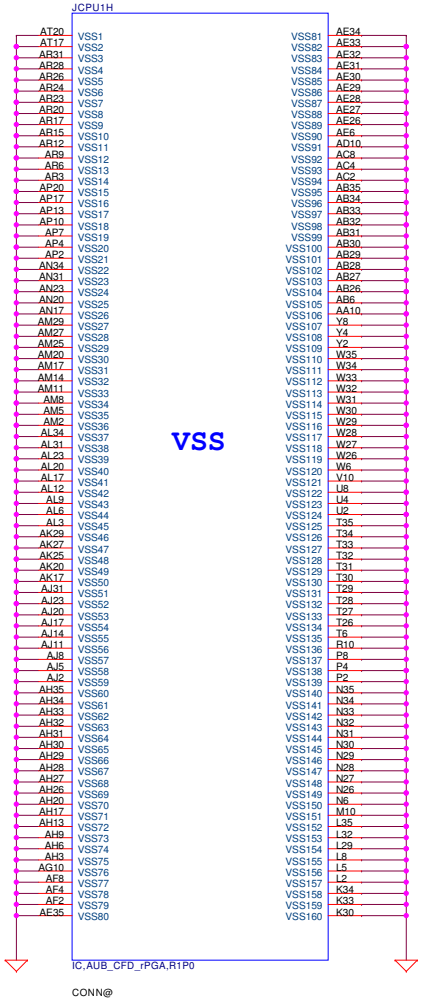

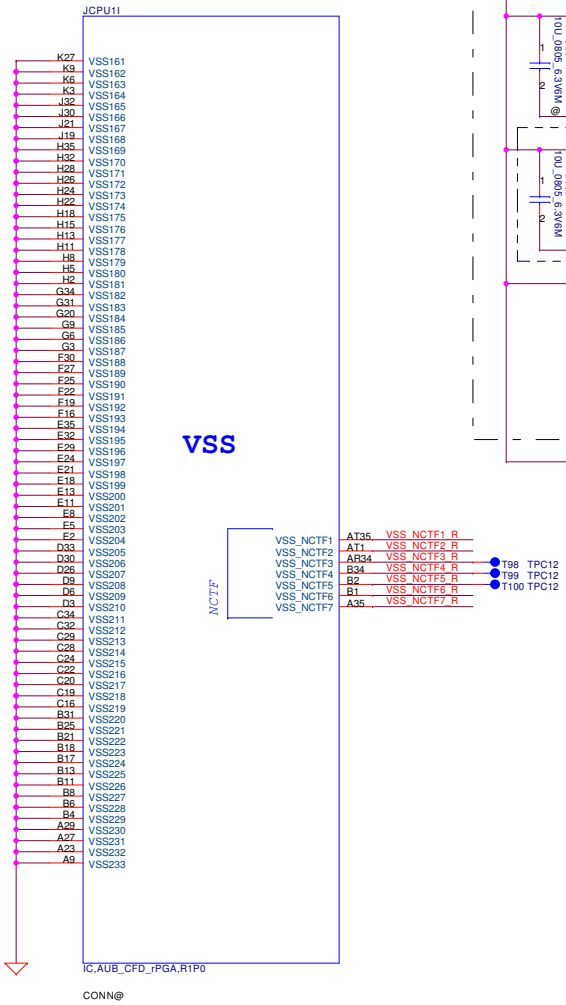

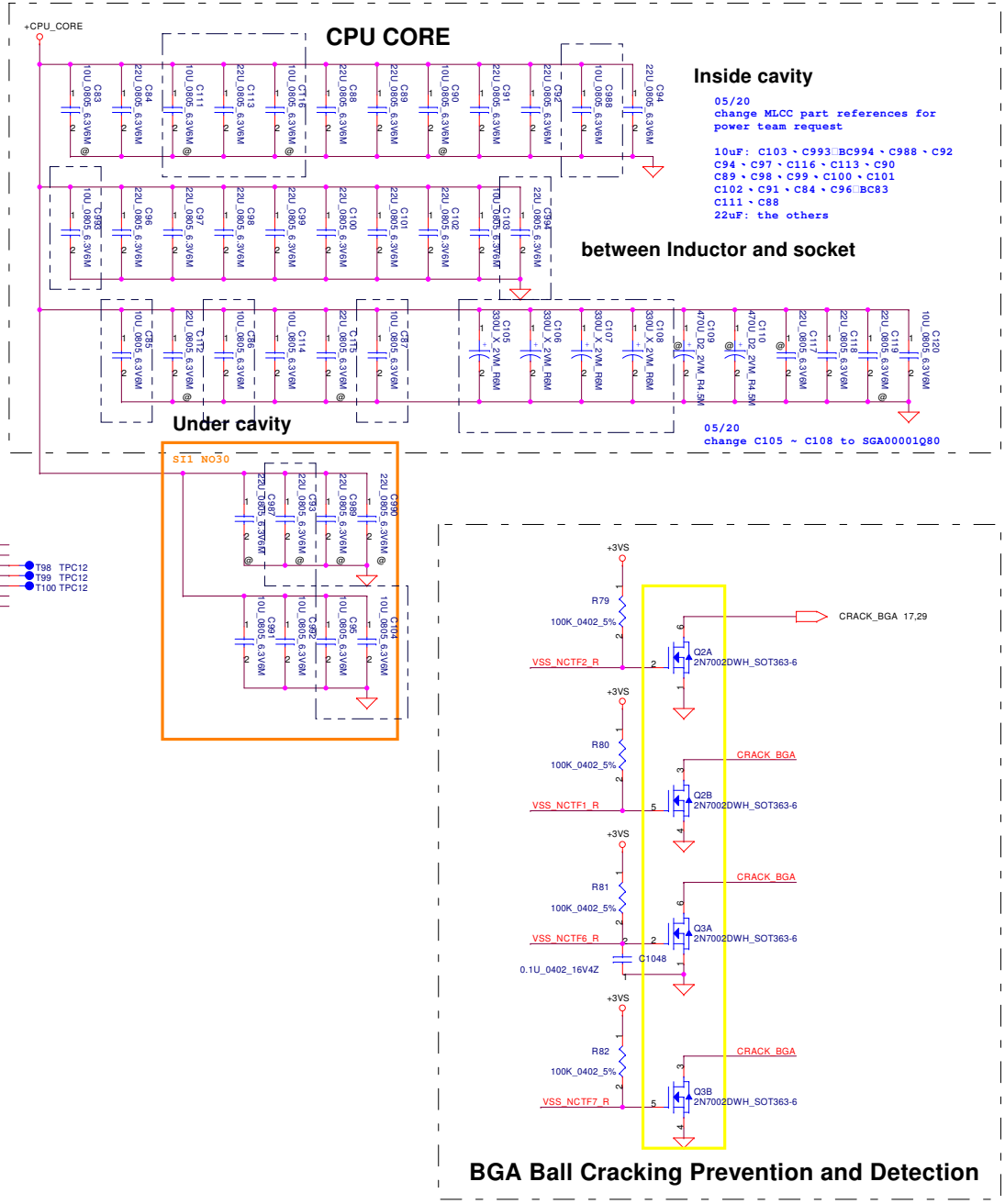

Security Classification	Compal Secret Data		
Issued Date	2008/09/15	Deciphered Date	2009/12/31

THIS SHEET OF ENGINEERING DRAWING IS THE PROPRIETARY PROPERTY OF COMPAL ELECTRONICS, INC. AND CONTAINS CONFIDENTIAL AND TRADE SECRET INFORMATION. THIS SHEET MAY NOT BE TRANSFERED FROM THE CUSTODY OF THE COMPETENT DIVISION OF R&D DEPARTMENT EXCEPT AS AUTHORIZED BY COMPAL ELECTRONICS, INC. NEITHER THIS SHEET NOR THE INFORMATION IT CONTAINS MAY BE USED BY OR DISCLOSED TO ANY THIRD PARTY WITHOUT PRIOR WRITTEN CONSENT OF COMPAL ELECTRONICS, INC.

Compal Electronics, Inc.

Title: Auburndale(5/5)-GND/Bypass

Size: Custom | Document Number: LA-4902P | Rev: 0.3

Date: Wednesday, December 09, 2009 | Sheet 8 of 47

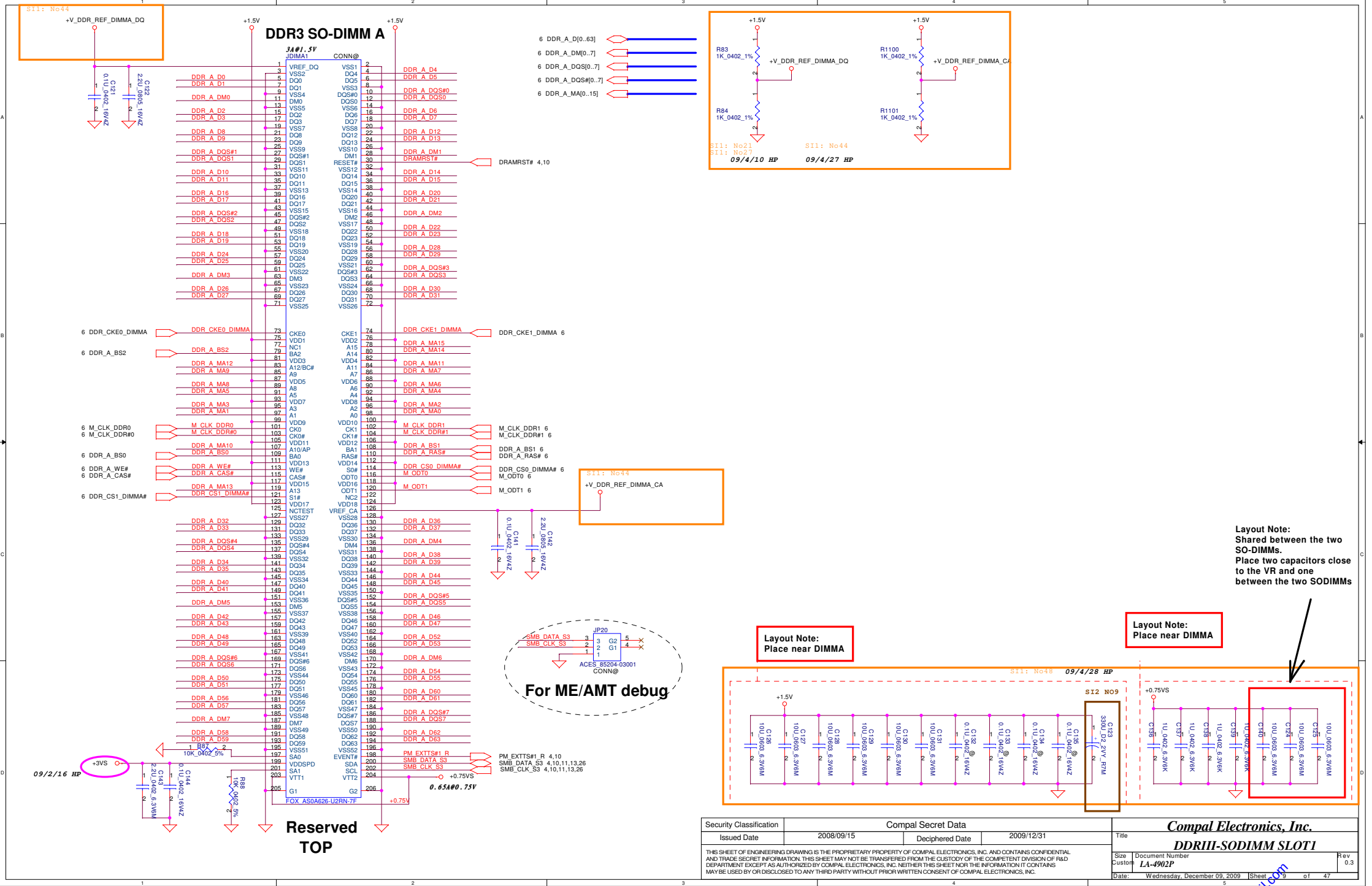

Security Classification	Compal Secret Data		
Issued Date	2008/09/15	Deciphered Date	2009/12/31

THIS SHEET OF ENGINEERING DRAWING IS THE PROPRIETARY PROPERTY OF COMPAL ELECTRONICS, INC. AND CONTAINS CONFIDENTIAL AND TRADE SECRET INFORMATION. THIS SHEET MAY NOT BE TRANSFERED FROM THE CUSTODY OF THE COMPETENT DIVISION OF R&D DEPARTMENT EXCEPT AS AUTHORIZED BY COMPAL ELECTRONICS, INC. NEITHER THIS SHEET NOR THE INFORMATION IT CONTAINS MAY BE USED BY OR DISCLOSED TO ANY THIRD PARTY WITHOUT PRIOR WRITTEN CONSENT OF COMPAL ELECTRONICS, INC.

Compal Electronics, Inc.

Title: DDRIII-SODIMM SLOT1

Size: Custom | Document Number: LA-4902P | Rev: 0.3

Date: Wednesday, December 09, 2009 | Sheet 9 of 47

hexainf@hotmail.com

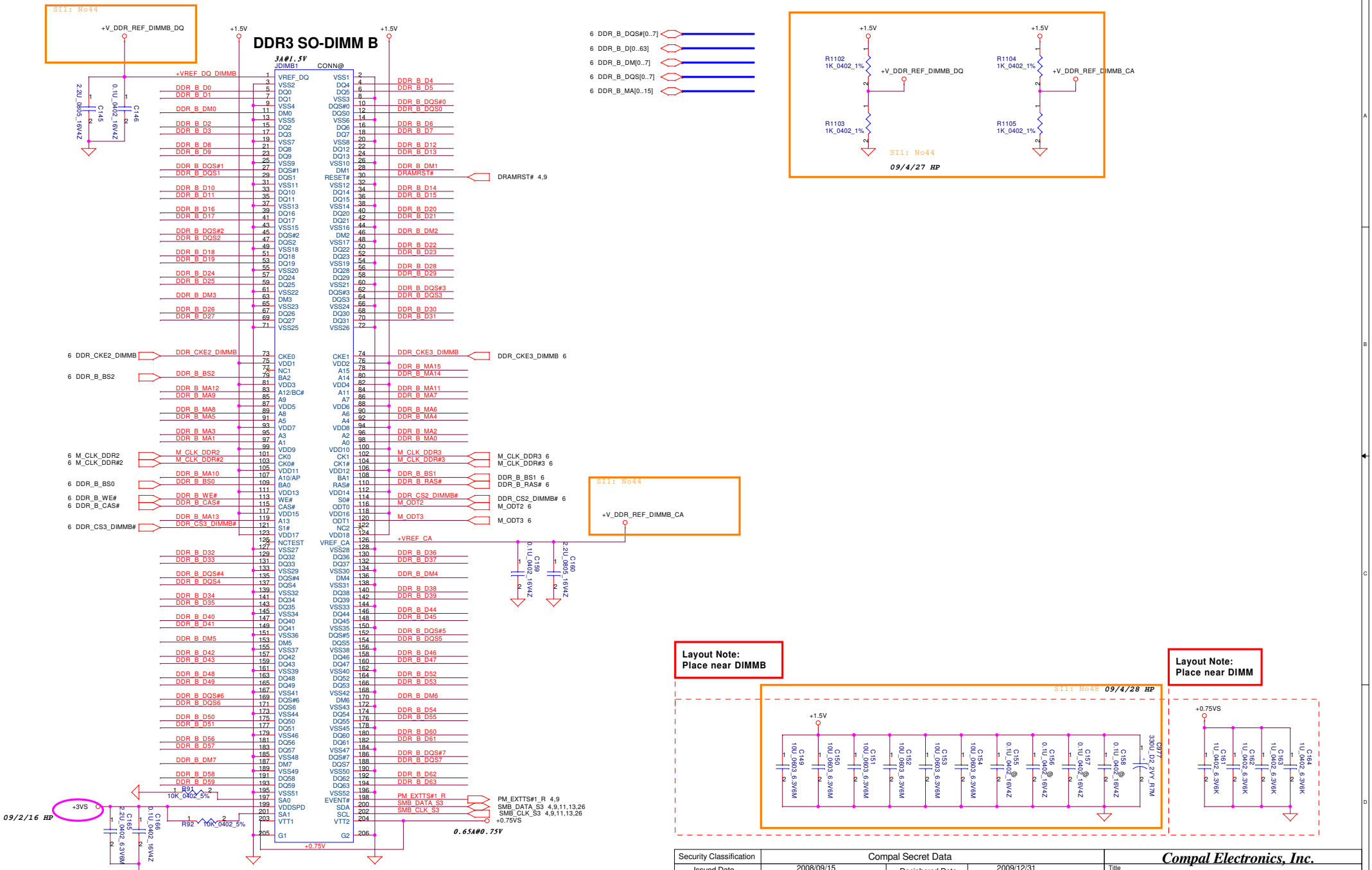

Security Classification	Compal Secret Data		
Issued Date	2008/09/15	Deciphered Date	2009/12/31

THIS SHEET OF ENGINEERING DRAWING IS THE PROPRIETARY PROPERTY OF COMPAL ELECTRONICS, INC. AND CONTAINS CONFIDENTIAL AND TRADE SECRET INFORMATION. THIS SHEET MAY NOT BE TRANSFERED FROM THE CUSTODY OF THE COMPETENT DIVISION OF R&D DEPARTMENT EXCEPT AS AUTHORIZED BY COMPAL ELECTRONICS, INC. NEITHER THIS SHEET NOR THE INFORMATION IT CONTAINS MAY BE USED BY OR DISCLOSED TO ANY THIRD PARTY WITHOUT PRIOR WRITTEN CONSENT OF COMPAL ELECTRONICS, INC.

Compal Electronics, Inc.

Title: **DDRIII-SODIMM SLOT2**

Size	Document Number	Rev
	LA-4902P	0.3

Date: Wednesday, December 09, 2009 | Sheet 10 of 47

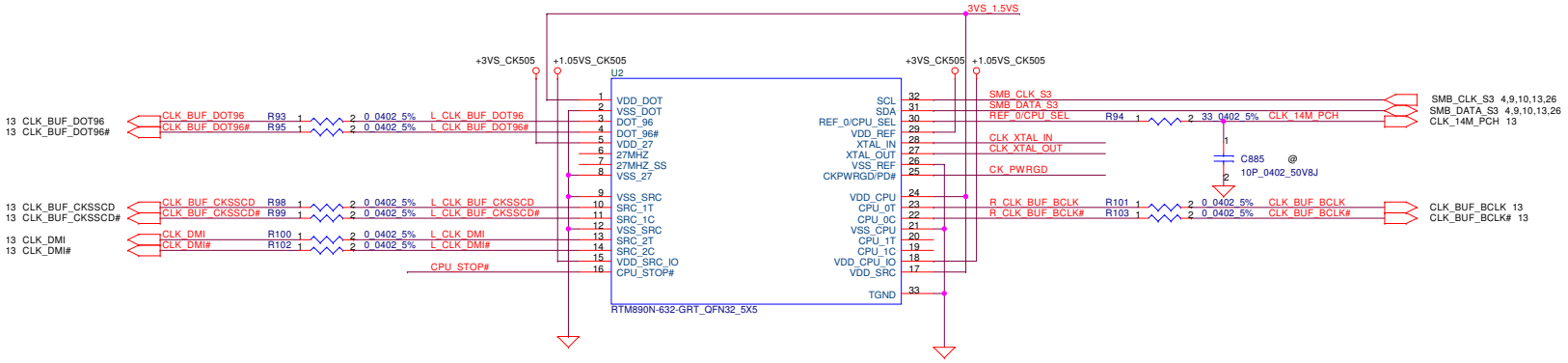

CLK Gen feature 1.5V support 6/29

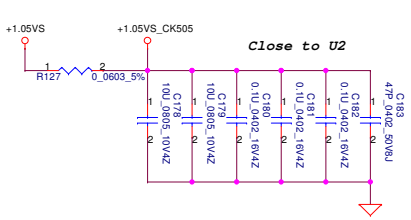

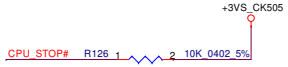

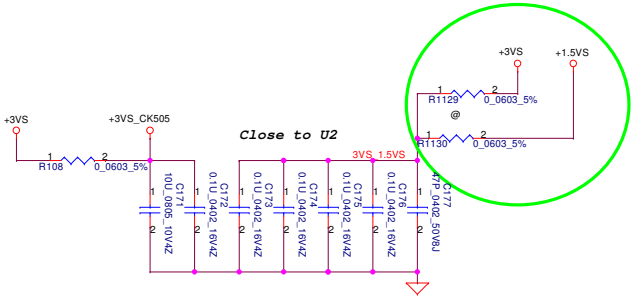

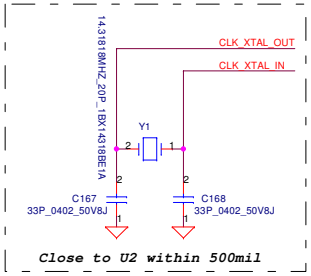

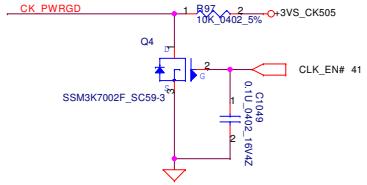

PIN 30	CPU_0	CPU_1
0 (Default)	133MHz	133MHz
1	100MHz	100MHz

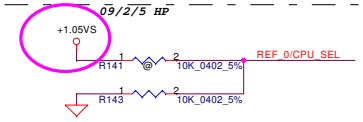

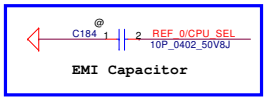

Security Classification	Compal Secret Data		
Issued Date	2008/09/15	Deciphered Date	2009/12/31

THIS SHEET OF ENGINEERING DRAWING IS THE PROPRIETARY PROPERTY OF COMPAL ELECTRONICS, INC. AND CONTAINS CONFIDENTIAL AND TRADE SECRET INFORMATION. THIS SHEET MAY NOT BE TRANSFERED FROM THE CUSTODY OF THE COMPETENT DIVISION OF R&D DEPARTMENT EXCEPT AS AUTHORIZED BY COMPAL ELECTRONICS, INC. NEITHER THIS SHEET NOR THE INFORMATION IT CONTAINS MAY BE USED BY OR DISCLOSED TO ANY THIRD PARTY WITHOUT PRIOR WRITTEN CONSENT OF COMPAL ELECTRONICS, INC.

Compal Electronics, Inc.

Title: **CLOCK GENERATOR**

Size | Document Number: LA-4902P | Rev: 0.3

Date: Wednesday, December 09, 2009 | Sheet 11 of 47

hexainf@hotmail.com

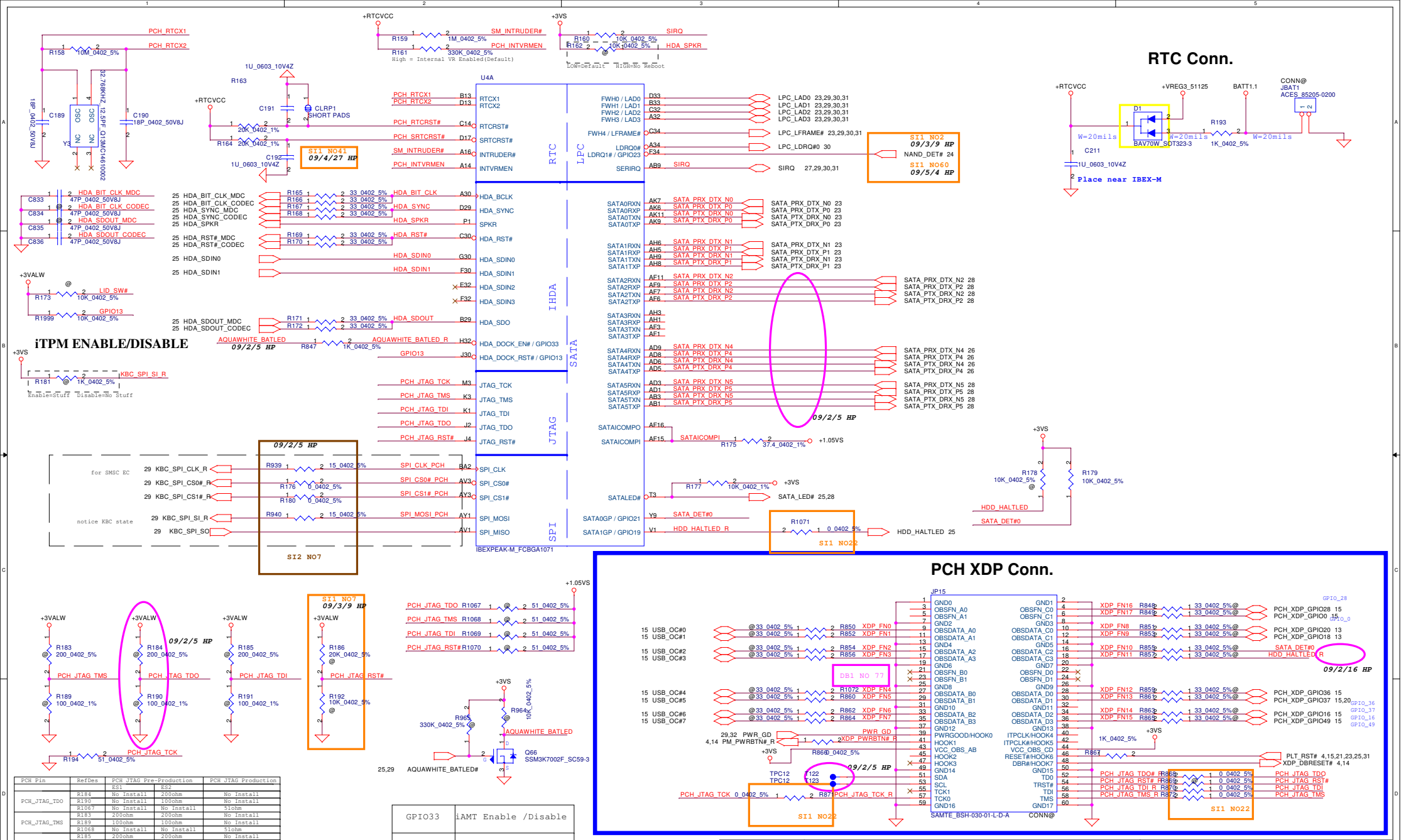

PCH Pin	RefDes	PCH JTAG Pre-Production		PCH JTAG Production
		ES1	ES2	
PCH_JTAG_TDO	R184	No Install	200ohm	No Install
	R190	No Install	100ohm	No Install
	R1067	No Install	No Install	51ohm
PCH_JTAG_TMS	R183	200ohm	200ohm	No Install
	R189	100ohm	100ohm	No Install
	R1068	No Install	No Install	51ohm
PCH_JTAG_TDI	R185	200ohm	200ohm	No Install
	R191	100ohm	100ohm	No Install
	R1069	No Install	No Install	51ohm
PCH_JTAG_TCK	R194	51ohm	51ohm	51ohm
PCH_JTAG_RST#	R186	20Kohm	20Kohm	No Install
	R192	10Kohm	10Kohm	No Install
	R1070	No Install	No Install	51ohm

GPIO33	iAMT Enable /Disable
Hi	Disable
Lo	Enable Default

Security Classification	Compal Secret Data		
Issued Date	2008/09/15	Deciphered Date	2009/12/31

THIS SHEET OF ENGINEERING DRAWING IS THE PROPRIETARY PROPERTY OF COMPAL ELECTRONICS, INC. AND CONTAINS CONFIDENTIAL AND TRADE SECRET INFORMATION. THIS SHEET MAY NOT BE TRANSFERED FROM THE CUSTODY OF THE COMPETENT DIVISION OF R&D DEPARTMENT EXCEPT AS AUTHORIZED BY COMPAL ELECTRONICS, INC. NEITHER THIS SHEET NOR THE INFORMATION IT CONTAINS MAY BE USED BY OR DISCLOSED TO ANY THIRD PARTY WITHOUT PRIOR WRITTEN CONSENT OF COMPAL ELECTRONICS, INC.

Compal Electronics, Inc.

Title: IBEX-M(1/6)-HDA/JTAG/SATA

Size: Custom | Document Number: LA-4902P | Rev: 0.3

Date: Wednesday, December 09, 2009 | Sheet 12 of 47

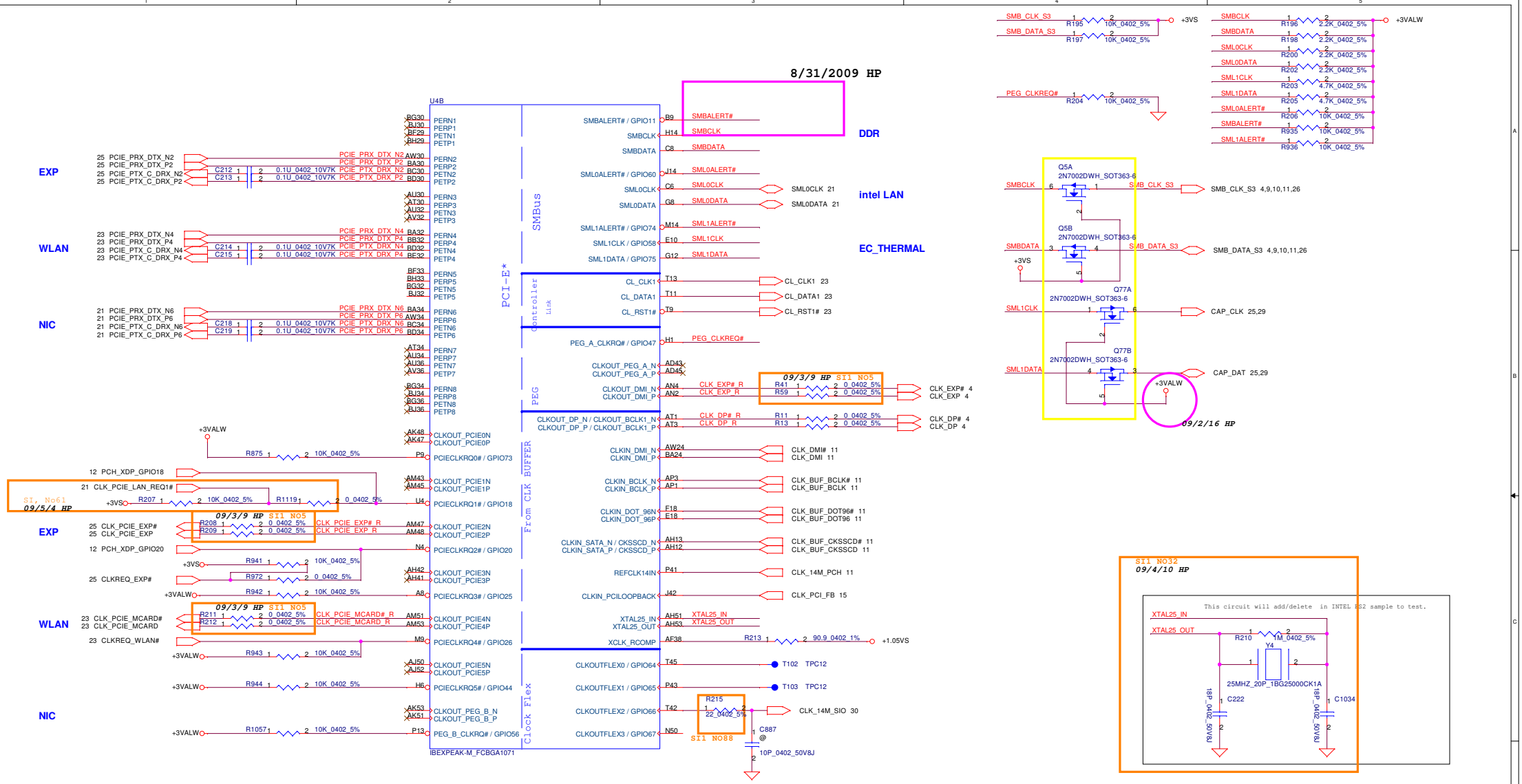

Security Classification	Compal Secret Data		
Issued Date	2008/09/15	Deciphered Date	2009/12/31

THIS SHEET OF ENGINEERING DRAWING IS THE PROPRIETARY PROPERTY OF COMPAL ELECTRONICS, INC. AND CONTAINS CONFIDENTIAL AND TRADE SECRET INFORMATION. THIS SHEET MAY NOT BE TRANSFERED FROM THE CUSTODY OF THE COMPETENT DIVISION OF R&D DEPARTMENT EXCEPT AS AUTHORIZED BY COMPAL ELECTRONICS, INC. NEITHER THIS SHEET NOR THE INFORMATION IT CONTAINS MAY BE USED BY OR DISCLOSED TO ANY THIRD PARTY WITHOUT PRIOR WRITTEN CONSENT OF COMPAL ELECTRONICS, INC.

Compal Electronics, Inc.

Title: **IBEX-M(2/6)-PCI-E/SMBUS/CLK**

Size: Custom | Document Number: LA-4902P | Rev: 0.3

Date: Wednesday, December 09, 2009 | Sheet 13 of 47

hexainf@hotmail.com

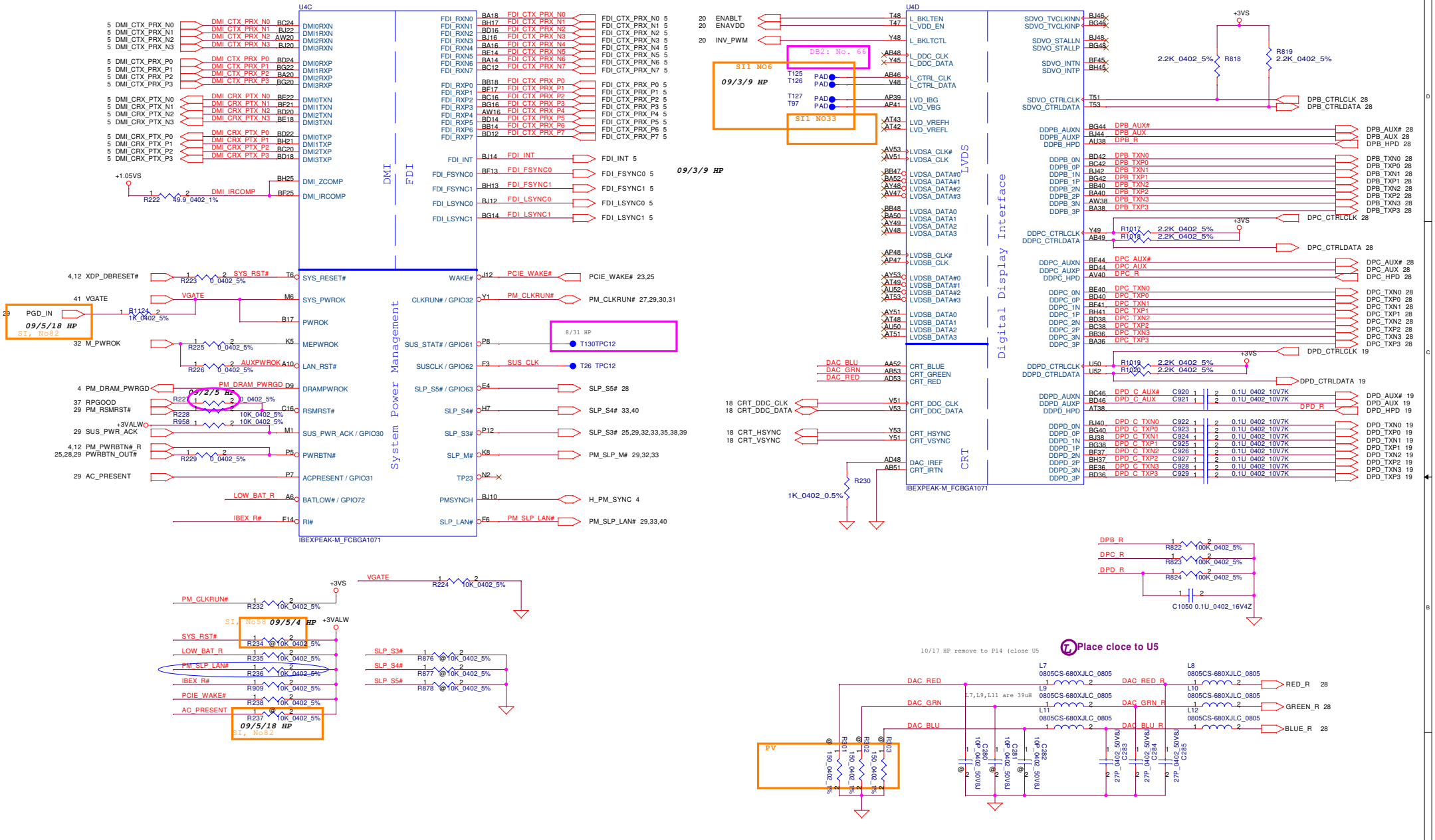

Security Classification	Compal Secret Data		
Issued Date	2008/09/15	Deciphered Date	2009/12/31

THIS SHEET OF ENGINEERING DRAWING IS THE PROPRIETARY PROPERTY OF COMPAL ELECTRONICS, INC. AND CONTAINS CONFIDENTIAL AND TRADE SECRET INFORMATION. THIS SHEET MAY NOT BE TRANSFERED FROM THE CUSTODY OF THE COMPETENT DIVISION OF R&D DEPARTMENT EXCEPT AS AUTHORIZED BY COMPAL ELECTRONICS, INC. NEITHER THIS SHEET NOR THE INFORMATION IT CONTAINS MAY BE USED BY OR DISCLOSED TO ANY THIRD PARTY WITHOUT PRIOR WRITTEN CONSENT OF COMPAL ELECTRONICS, INC.

Compal Electronics, Inc.

Title: **IBEX-M(3/6)-DMI/GPIO/LVDS**

Size: Custom | Document Number: LA-4902P | Rev: 0.3

Date: Wednesday, December 09, 2009 | Sheet 14 of 47

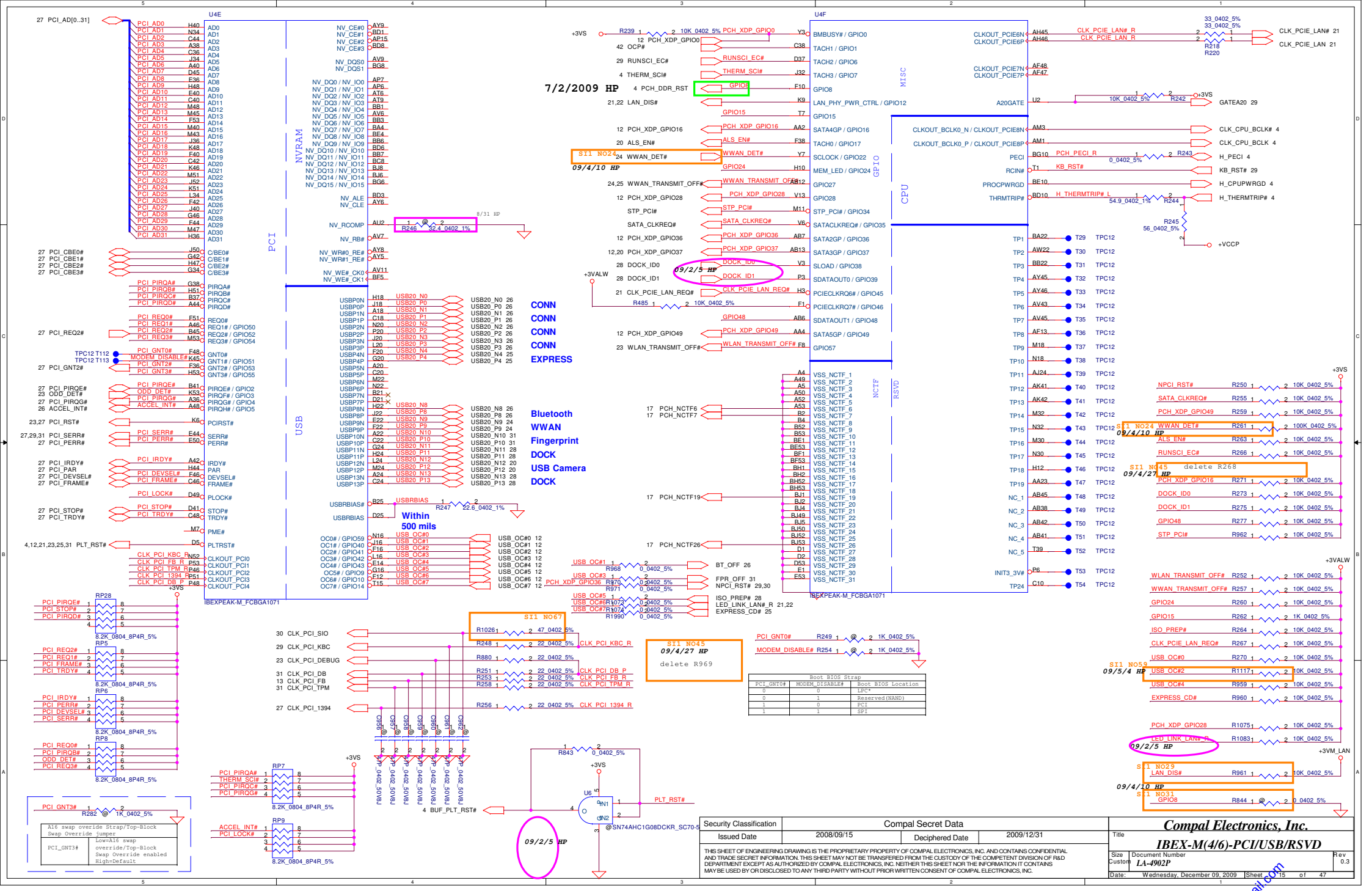
U4E
U4F
PCI
NVRAM
USB
MISC
GPIO
CPU
NCTF
RSVD
IBEXPEAK-M_FCBGA1071
7/2/2009 HP
SI1 NO24
09/4/10 HP
09/2/5 HP
CONN
CONN
CONN
CONN
EXPRESS
Bluetooth
WWAN
Fingerprint
DOCK
USB Camera
DOCK
Within
500 mils
SI1 NO67
SI1 NO45
09/4/27 HP
delete R969
SI1 NO45 delete R268
09/4/27 HP
SI1 NO59
09/5/4 HP
SI1 NO29
LAN_DIS#
09/4/10 HP
SI1 NO31
GPIO8
09/2/5 HP
Boot BIOS Strap
PCI_GNT0# MODEM_DISABLE# Boot BIOS Location
0 0 LPC*
0 1 Reserved(NAND)
1 0 PCI
1 1 SPI
A16 swap overide Strap/Top-Block Swap Override jumper
PCI_GNT3# Low=A16 swap override/Top-Block Swap Override enabled High=Default
Security Classification Compal Secret Data
Issued Date 2008/09/15 Deciphered Date 2009/12/31
Compal Electronics, Inc.
Title IBEX-M(4/6)-PCI/USB/RSVD
Size Custom Document Number LA-4902P Rev 0.3
Date: Wednesday, December 09, 2009 Sheet 15 of 47
hexainf@hotmail.com

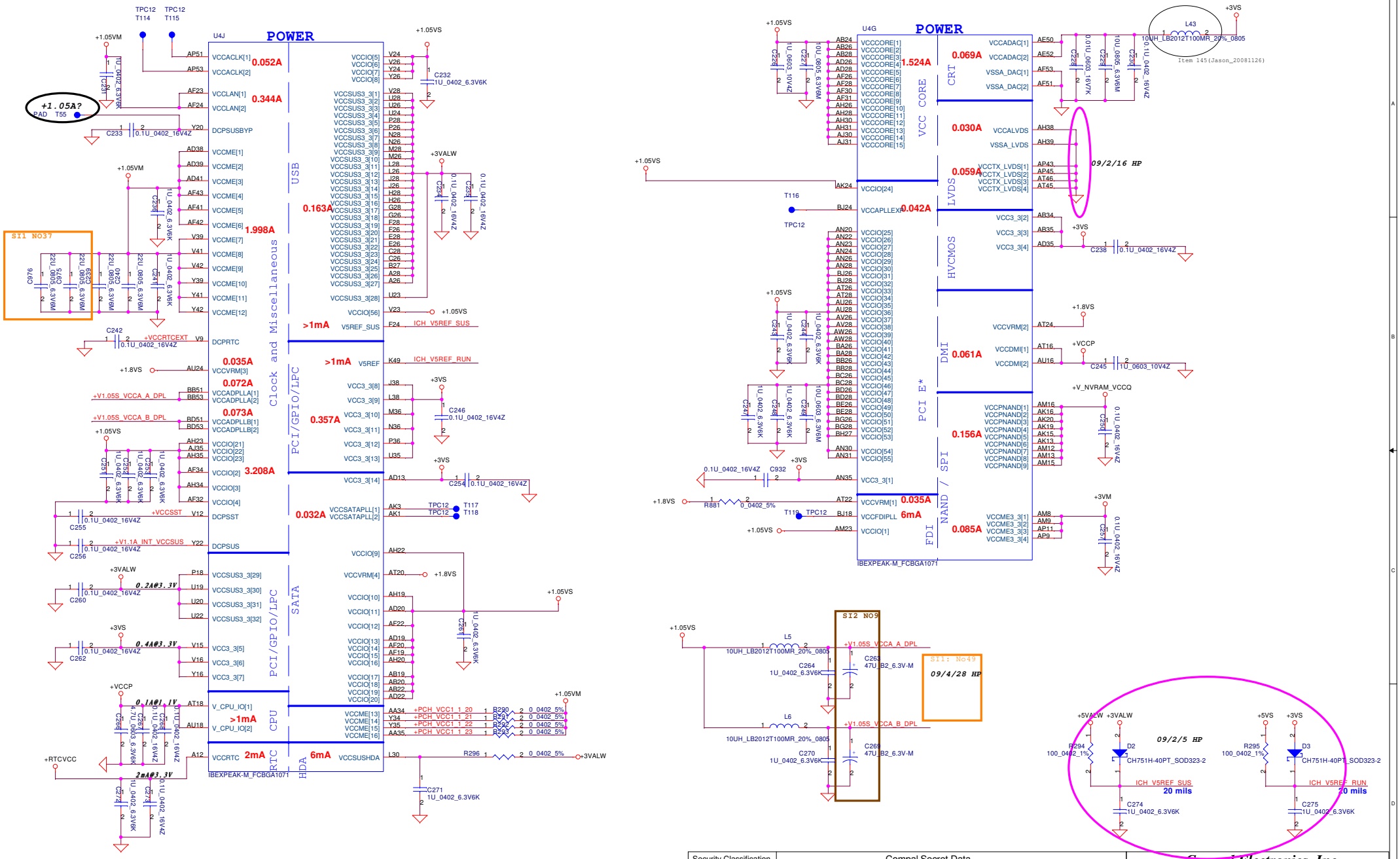

Security Classification	Compal Secret Data		
Issued Date	2008/09/15	Deciphered Date	2009/12/31

THIS SHEET OF ENGINEERING DRAWING IS THE PROPRIETARY PROPERTY OF COMPAL ELECTRONICS, INC. AND CONTAINS CONFIDENTIAL AND TRADE SECRET INFORMATION. THIS SHEET MAY NOT BE TRANSFERRED FROM THE CUSTODY OF THE COMPETENT DIVISION OF R&D DEPARTMENT EXCEPT AS AUTHORIZED BY COMPAL ELECTRONICS, INC. NEITHER THIS SHEET NOR THE INFORMATION IT CONTAINS MAY BE USED BY OR DISCLOSED TO ANY THIRD PARTY WITHOUT PRIOR WRITTEN CONSENT OF COMPAL ELECTRONICS, INC.

Compal Electronics, Inc.

Title: **IBEX-M(5/6)-PWR**

Size: Custom | Document Number: LA-4902P | Rev: 0.3

Date: Wednesday, December 09, 2009 | Sheet 16 of 47

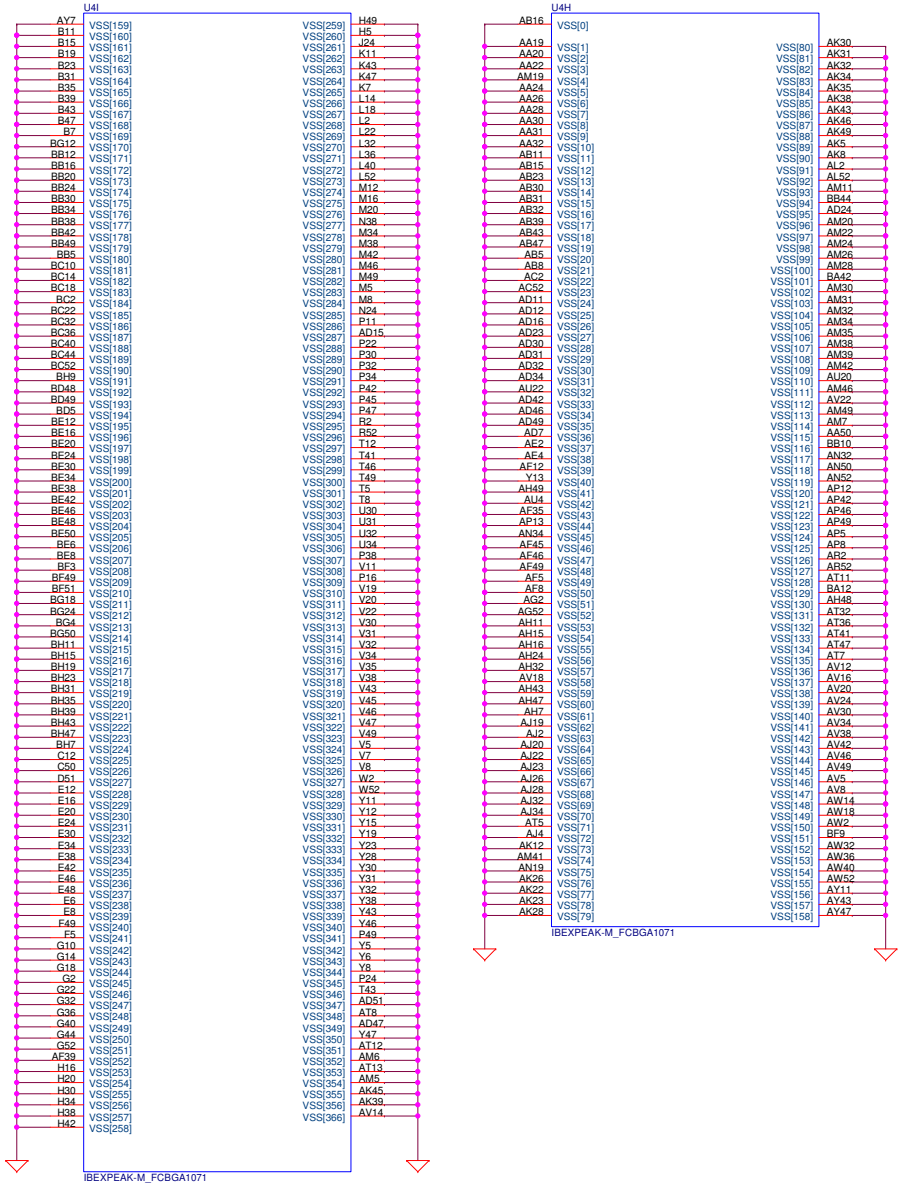

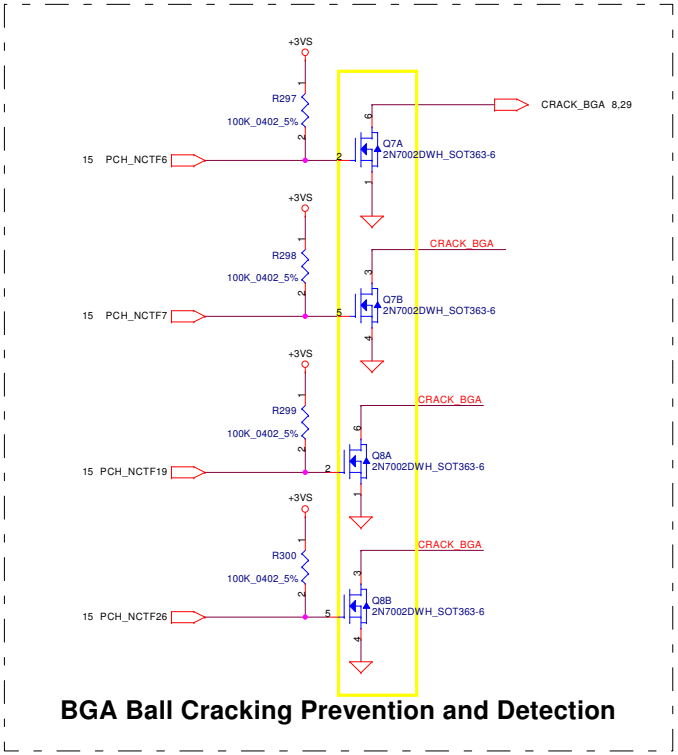

Security Classification	Compal Secret Data		
Issued Date	2008/09/15	Deciphered Date	2009/12/31

THIS SHEET OF ENGINEERING DRAWING IS THE PROPRIETARY PROPERTY OF COMPAL ELECTRONICS, INC. AND CONTAINS CONFIDENTIAL AND TRADE SECRET INFORMATION. THIS SHEET MAY NOT BE TRANSFERED FROM THE CUSTODY OF THE COMPETENT DIVISION OF R&D DEPARTMENT EXCEPT AS AUTHORIZED BY COMPAL ELECTRONICS, INC. NEITHER THIS SHEET NOR THE INFORMATION IT CONTAINS MAY BE USED BY OR DISCLOSED TO ANY THIRD PARTY WITHOUT PRIOR WRITTEN CONSENT OF COMPAL ELECTRONICS, INC.

Compal Electronics, Inc.

Title: **IBEX-M(6/6)-GND**

Size: Custom | Document Number: LA-4902P | Rev: 0.3

Date: Wednesday, December 09, 2009 | Sheet 17 of 47

hexainf@hotmail.com

CRT Connector

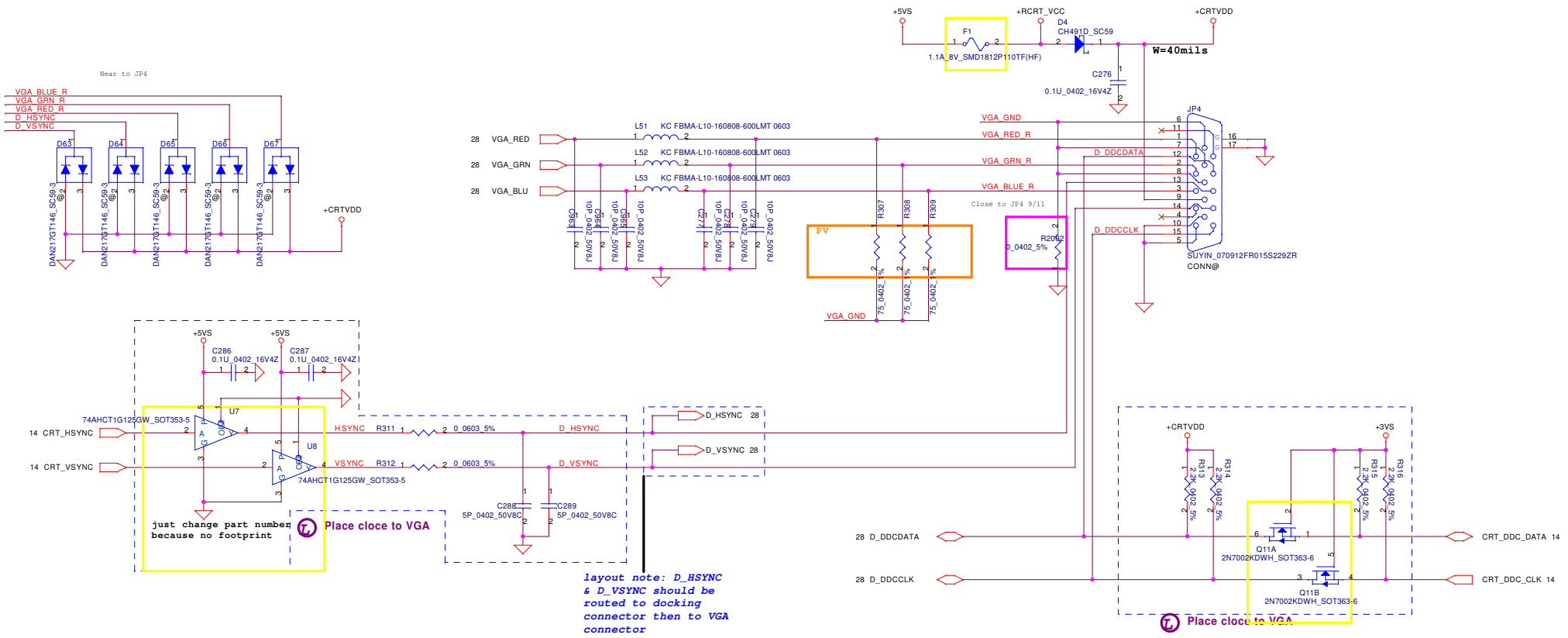

Security Classification	Compal Secret Data		
Issued Date	2008/09/15	Deciphered Date	2009/12/31

THIS SHEET OF ENGINEERING DRAWING IS THE PROPRIETARY PROPERTY OF COMPAL ELECTRONICS, INC. AND CONTAINS CONFIDENTIAL AND TRADE SECRET INFORMATION. THIS SHEET MAY NOT BE TRANSFERED FROM THE CUSTODY OF THE COMPETENT DIVISION OF R&D DEPARTMENT EXCEPT AS AUTHORIZED BY COMPAL ELECTRONICS, INC. NEITHER THIS SHEET NOR THE INFORMATION IT CONTAINS MAY BE USED BY OR DISCLOSED TO ANY THIRD PARTY WITHOUT PRIOR WRITTEN CONSENT OF COMPAL ELECTRONICS, INC.

Compal Electronics, Inc.

Title: **CRT Connector**

Size: | Document Number: *LA-4902P* | Rev: 0.3

Date: Wednesday, December 09, 2009 | Sheet 18 of 47

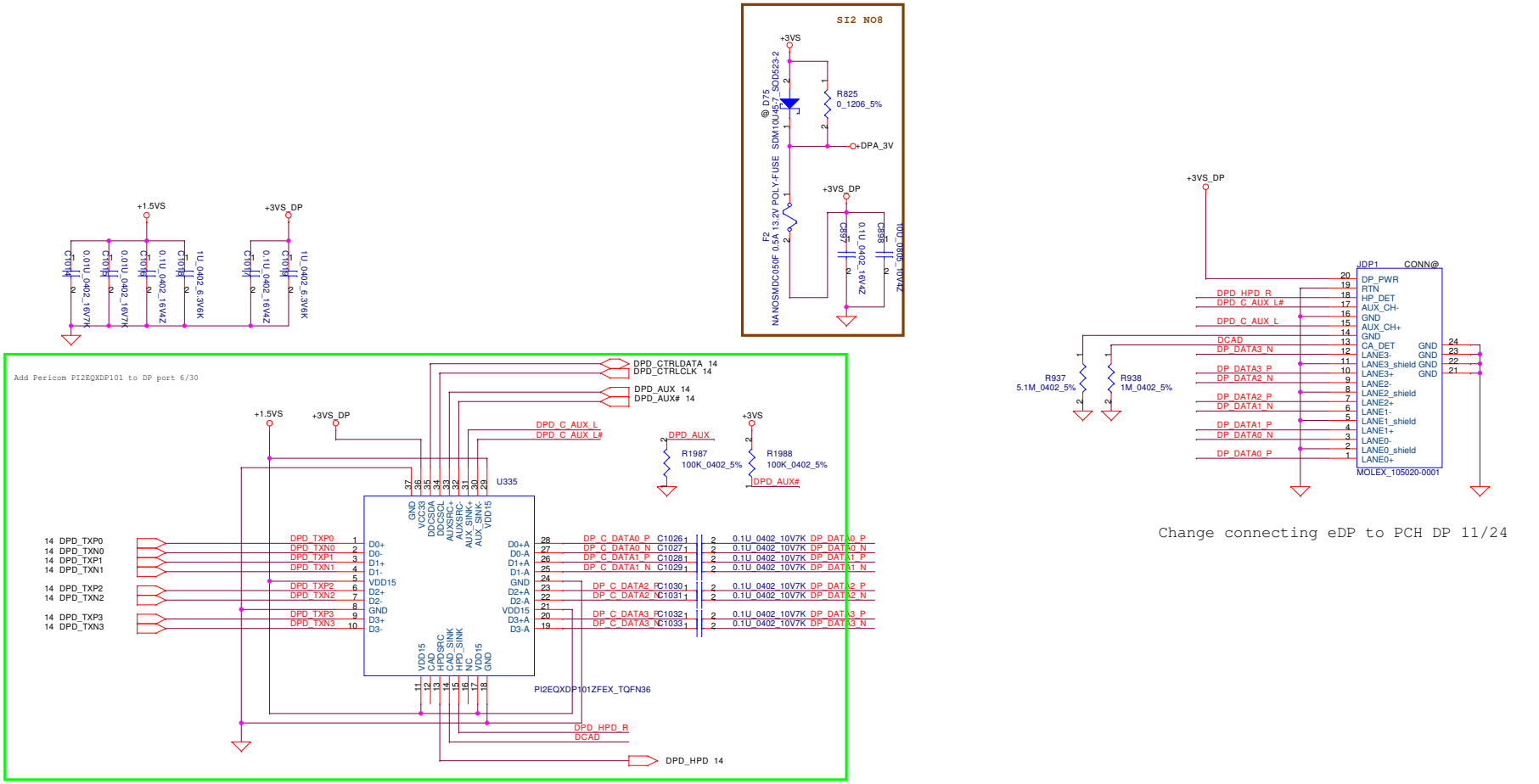

Change connecting eDP to PCH DP 11/24

Security Classification	Compal Secret Data		
Issued Date	2008/09/15	Deciphered Date	2009/12/31

THIS SHEET OF ENGINEERING DRAWING IS THE PROPRIETARY PROPERTY OF COMPAL ELECTRONICS, INC. AND CONTAINS CONFIDENTIAL AND TRADE SECRET INFORMATION. THIS SHEET MAY NOT BE TRANSFERED FROM THE CUSTODY OF THE COMPETENT DIVISION OF R&D DEPARTMENT EXCEPT AS AUTHORIZED BY COMPAL ELECTRONICS, INC. NEITHER THIS SHEET NOR THE INFORMATION IT CONTAINS MAY BE USED BY OR DISCLOSED TO ANY THIRD PARTY WITHOUT PRIOR WRITTEN CONSENT OF COMPAL ELECTRONICS, INC.

Compal Electronics, Inc.

Title: **Display Port Connector**

Size | Document Number: *LA-4902P* | Rev: 0.3

Date: Wednesday, December 09, 2009 | Sheet 19 of 47

hexainf@hotmail.com

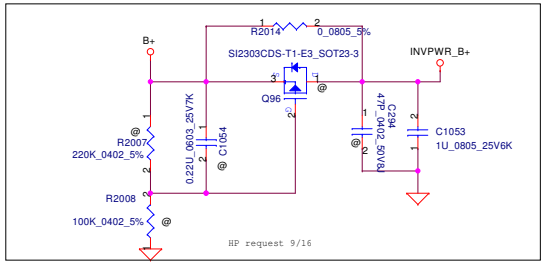

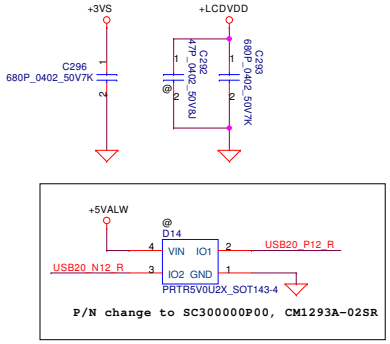

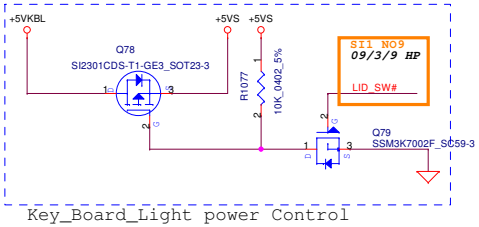

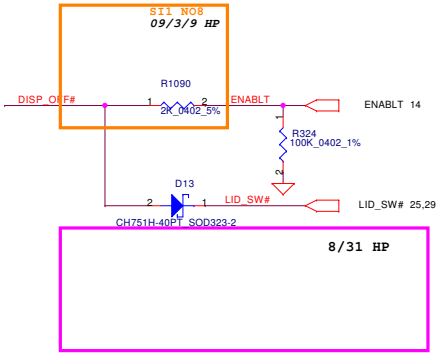

LCD/PANEL BD. CONN.

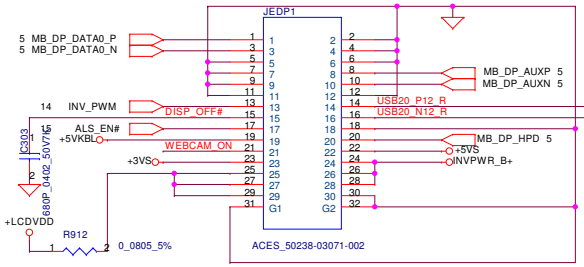

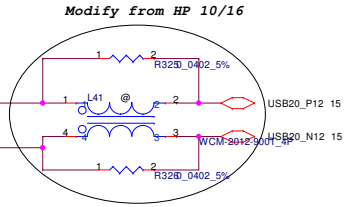

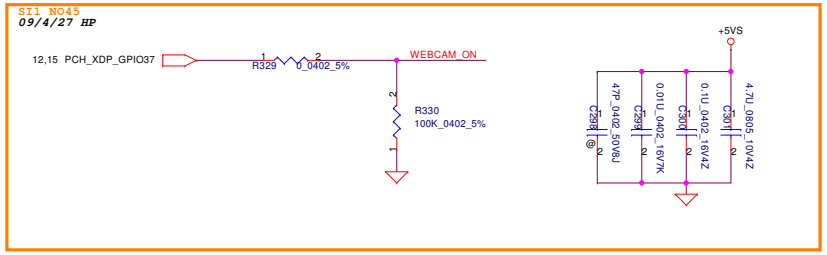

Change eDP LCD connector to 30pin for Coxial cable 9/13

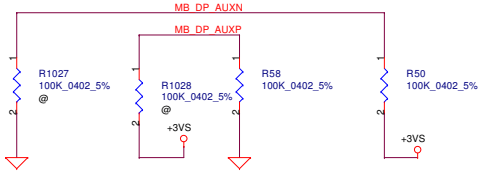

LCD POWER CIRCUIT

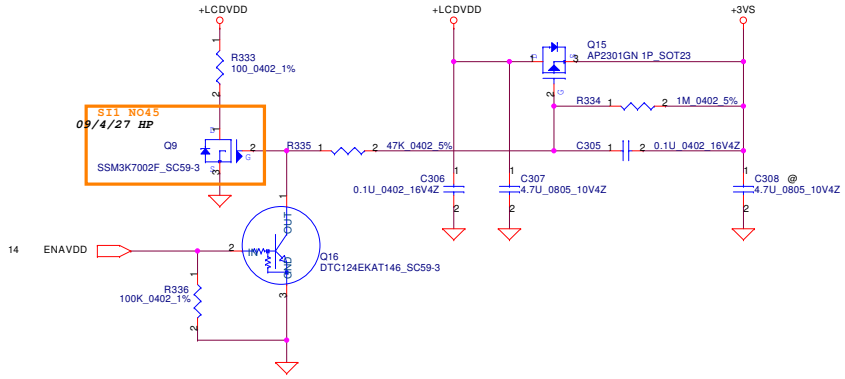

Security Classification	Compal Secret Data		
Issued Date	2008/09/15	Deciphered Date	2009/12/31

THIS SHEET OF ENGINEERING DRAWING IS THE PROPRIETARY PROPERTY OF COMPAL ELECTRONICS, INC. AND CONTAINS CONFIDENTIAL AND TRADE SECRET INFORMATION. THIS SHEET MAY NOT BE TRANSFERED FROM THE CUSTODY OF THE COMPETENT DIVISION OF R&D DEPARTMENT EXCEPT AS AUTHORIZED BY COMPAL ELECTRONICS, INC. NEITHER THIS SHEET NOR THE INFORMATION IT CONTAINS MAY BE USED BY OR DISCLOSED TO ANY THIRD PARTY WITHOUT PRIOR WRITTEN CONSENT OF COMPAL ELECTRONICS, INC.

Compal Electronics, Inc.

Title: **LCD CONN & Q-Switch & GPIO Ext.**

Size	Document Number	Rev
	LA-4902P	0.3

Date: Wednesday, December 09, 2009 | Sheet 20 of 47

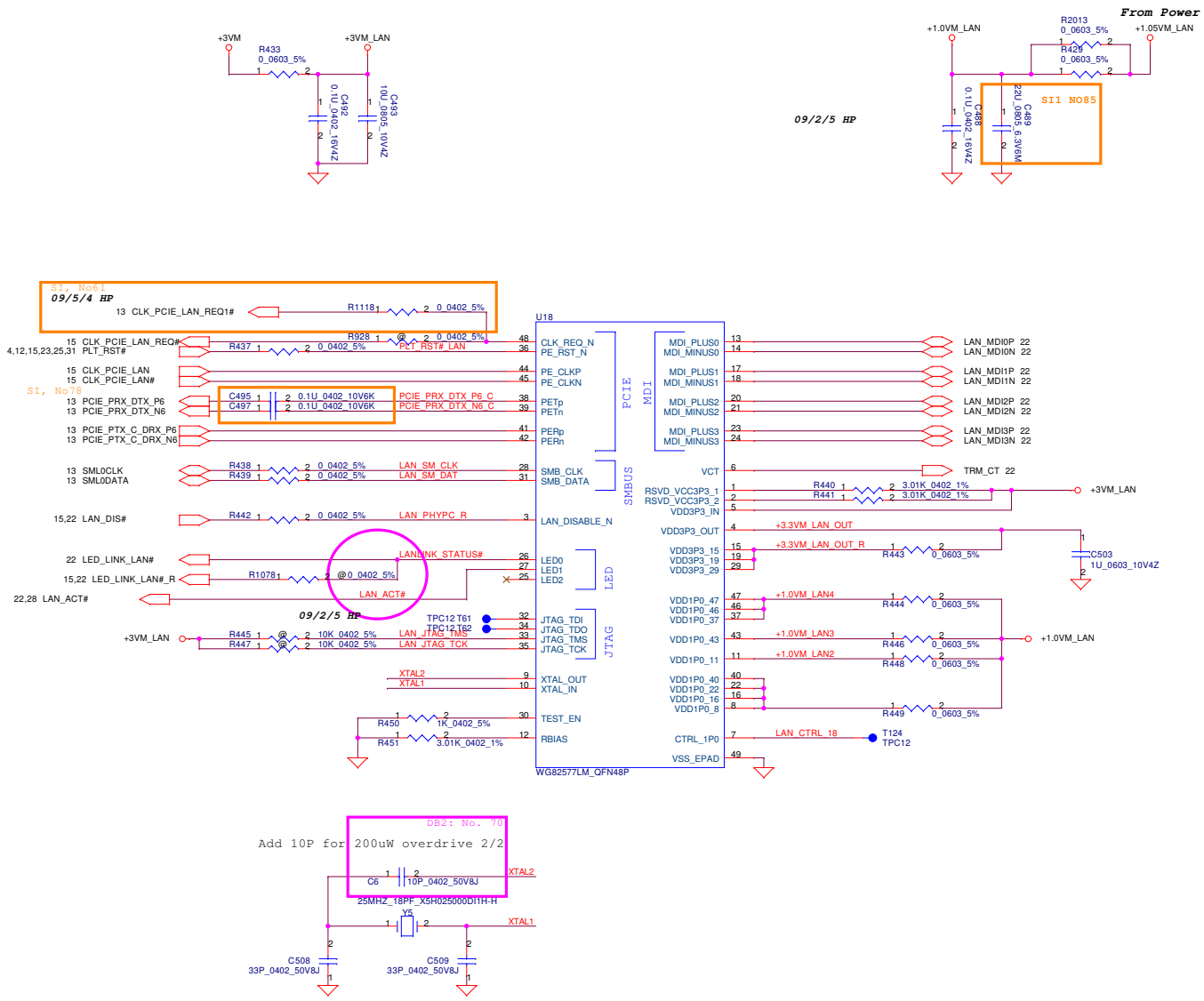

Security Classification	Compal Secret Data		
Issued Date	2008/09/15	Deciphered Date	2009/12/31

THIS SHEET OF ENGINEERING DRAWING IS THE PROPRIETARY PROPERTY OF COMPAL ELECTRONICS, INC. AND CONTAINS CONFIDENTIAL AND TRADE SECRET INFORMATION. THIS SHEET MAY NOT BE TRANSFERRED FROM THE CUSTODY OF THE COMPETENT DIVISION OF R&D DEPARTMENT EXCEPT AS AUTHORIZED BY COMPAL ELECTRONICS, INC. NEITHER THIS SHEET NOR THE INFORMATION IT CONTAINS MAY BE USED BY OR DISCLOSED TO ANY THIRD PARTY WITHOUT PRIOR WRITTEN CONSENT OF COMPAL ELECTRONICS, INC.

Compal Electronics, Inc.

Title: **Intel 82566 Nineveh**

Size: | Document Number: **LA-4902P** | Rev: 0.3

Date: Wednesday, December 09, 2009 | Sheet 21 of 47

hexainf@hotmail.com

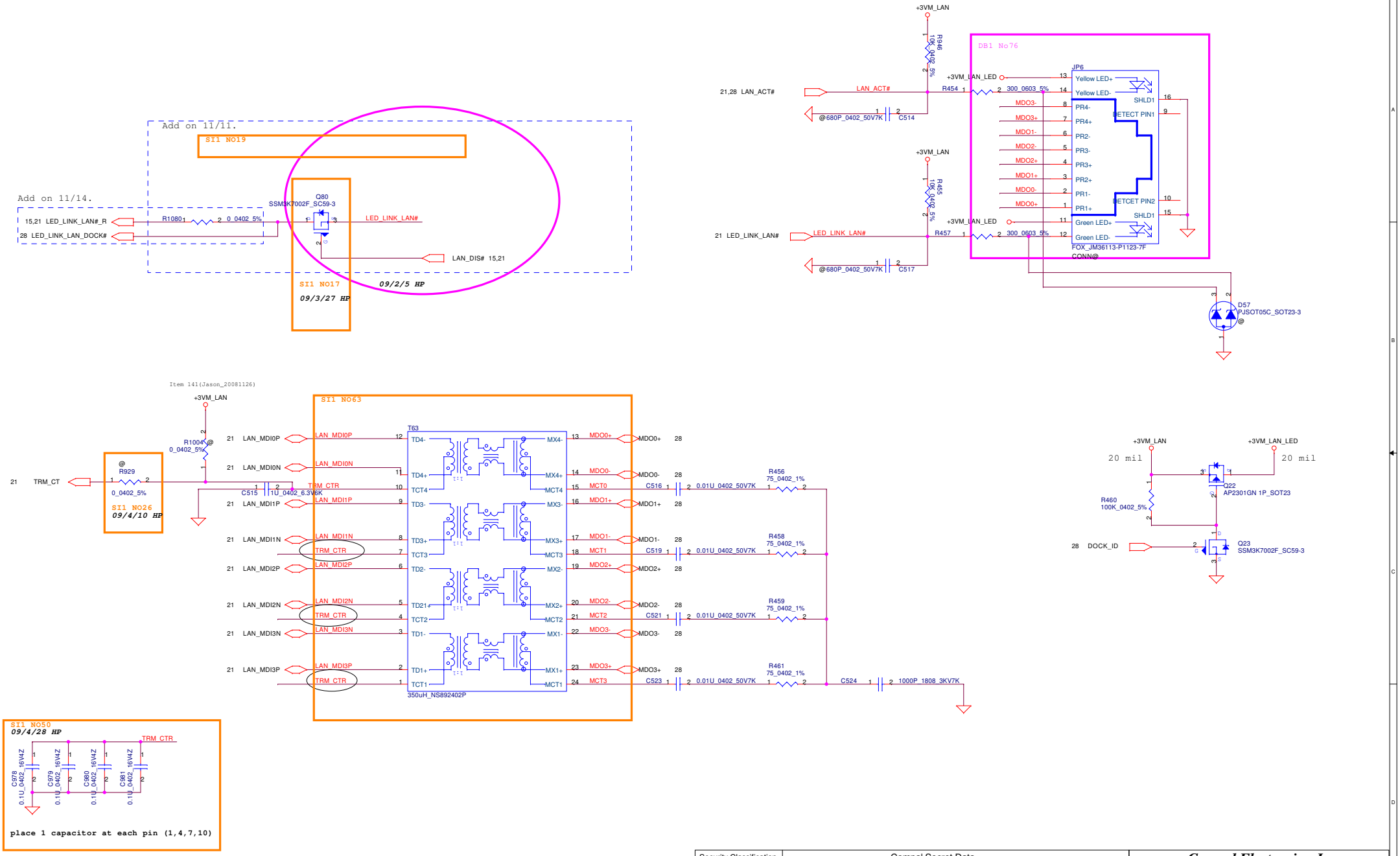

Security Classification	Compal Secret Data		
Issued Date	2008/09/15	Deciphered Date	2009/12/31

THIS SHEET OF ENGINEERING DRAWING IS THE PROPRIETARY PROPERTY OF COMPAL ELECTRONICS, INC. AND CONTAINS CONFIDENTIAL AND TRADE SECRET INFORMATION. THIS SHEET MAY NOT BE TRANSFERED FROM THE CUSTODY OF THE COMPETENT DIVISION OF R&D DEPARTMENT EXCEPT AS AUTHORIZED BY COMPAL ELECTRONICS, INC. NEITHER THIS SHEET NOR THE INFORMATION IT CONTAINS MAY BE USED BY OR DISCLOSED TO ANY THIRD PARTY WITHOUT PRIOR WRITTEN CONSENT OF COMPAL ELECTRONICS, INC.

Compal Electronics, Inc.

Title: **Magnetic & RJ45**

Size: | Document Number: *LA-4902P* | Rev: 0.3

Date: Wednesday, December 09, 2009 | Sheet 22 of 47

WLAN (Half mini Card)

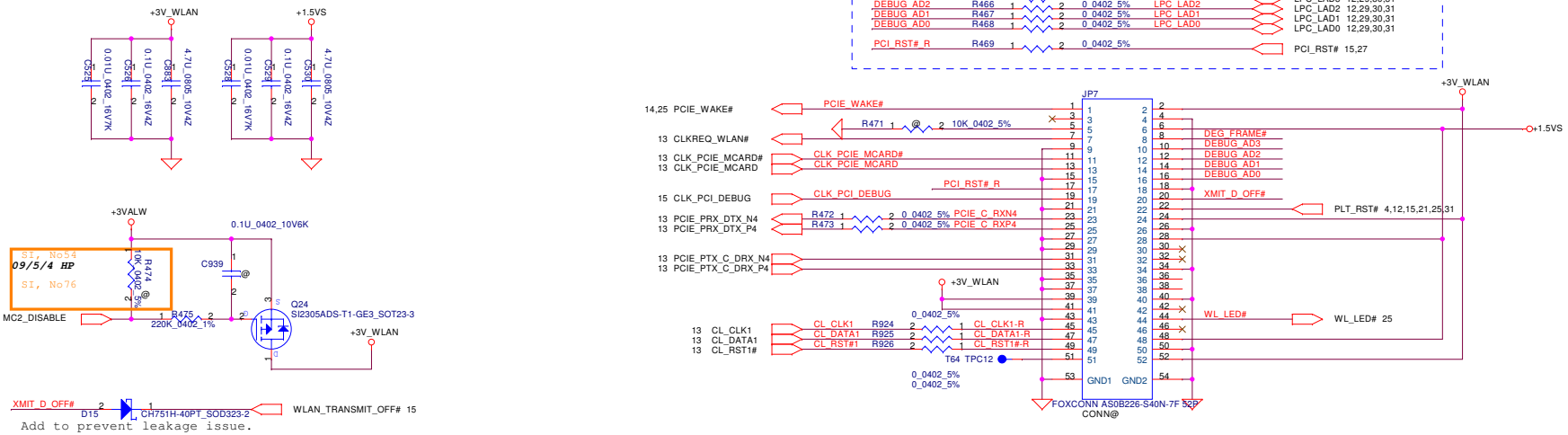

SATA HDD CONN.

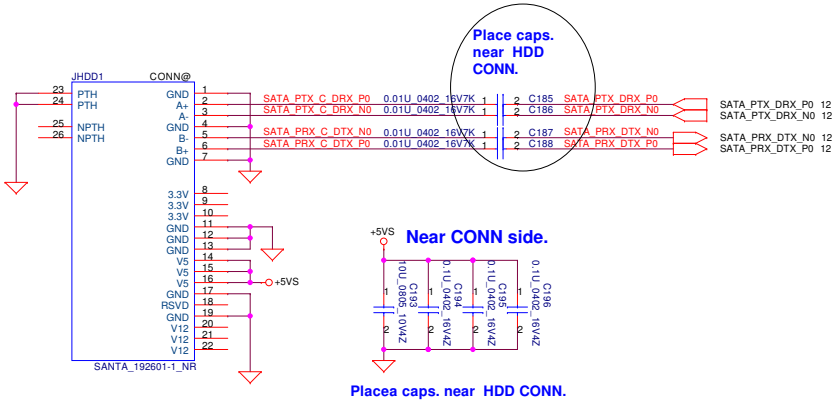

SATA ODD CONN.

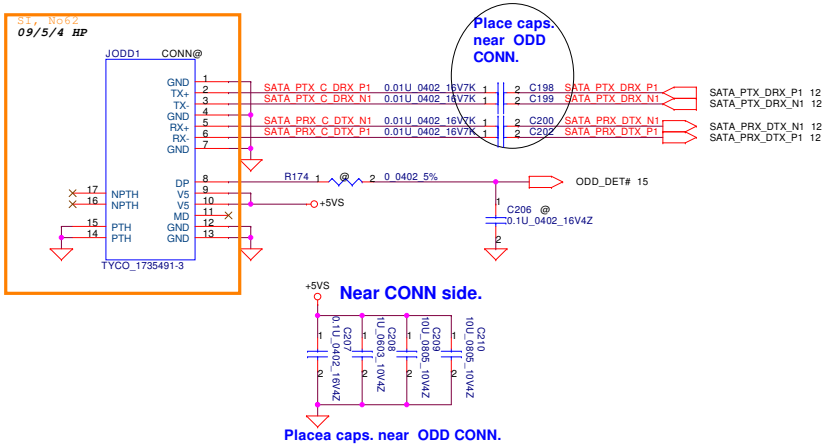

Security Classification	Compal Secret Data		
Issued Date	2008/09/15	Deciphered Date	2009/12/31

THIS SHEET OF ENGINEERING DRAWING IS THE PROPRIETARY PROPERTY OF COMPAL ELECTRONICS, INC. AND CONTAINS CONFIDENTIAL AND TRADE SECRET INFORMATION. THIS SHEET MAY NOT BE TRANSFERED FROM THE CUSTODY OF THE COMPETENT DIVISION OF R&D DEPARTMENT EXCEPT AS AUTHORIZED BY COMPAL ELECTRONICS, INC. NEITHER THIS SHEET NOR THE INFORMATION IT CONTAINS MAY BE USED BY OR DISCLOSED TO ANY THIRD PARTY WITHOUT PRIOR WRITTEN CONSENT OF COMPAL ELECTRONICS, INC.

Compal Electronics, Inc.

Title: **WLAN/ODD/HDD**

Size | Document Number: *LA-4902P* | Rev: 0.3

Date: Wednesday, December 09, 2009 | Sheet 23 of 47

hexainf@hotmail.com

WWAN (Full mini Card)

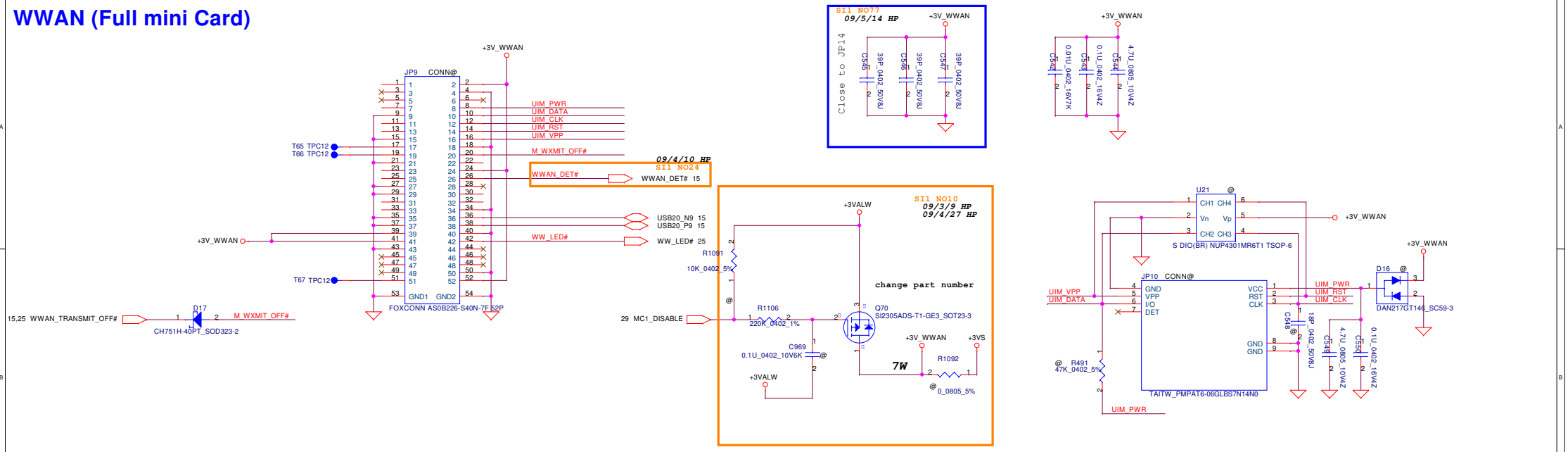

NAND

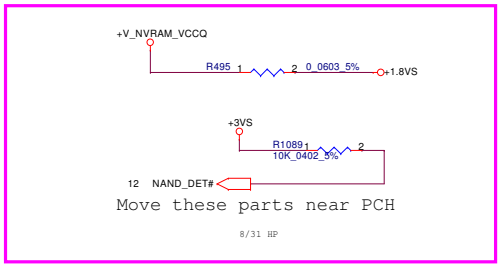

Security Classification	Compal Secret Data		
Issued Date	2008/09/15	Deciphered Date	2009/12/31

THIS SHEET OF ENGINEERING DRAWING IS THE PROPRIETARY PROPERTY OF COMPAL ELECTRONICS, INC. AND CONTAINS CONFIDENTIAL AND TRADE SECRET INFORMATION. THIS SHEET MAY NOT BE TRANSFERED FROM THE CUSTODY OF THE COMPETENT DIVISION OF R&D DEPARTMENT EXCEPT AS AUTHORIZED BY COMPAL ELECTRONICS, INC. NEITHER THIS SHEET NOR THE INFORMATION IT CONTAINS MAY BE USED BY OR DISCLOSED TO ANY THIRD PARTY WITHOUT PRIOR WRITTEN CONSENT OF COMPAL ELECTRONICS, INC.

Compal Electronics, Inc.

Title: **WWAN/NAND**

Size | Document Number: *LA-4902P* | Rev: 0.3

Date: Wednesday, December 09, 2009 | Sheet 24 of 47

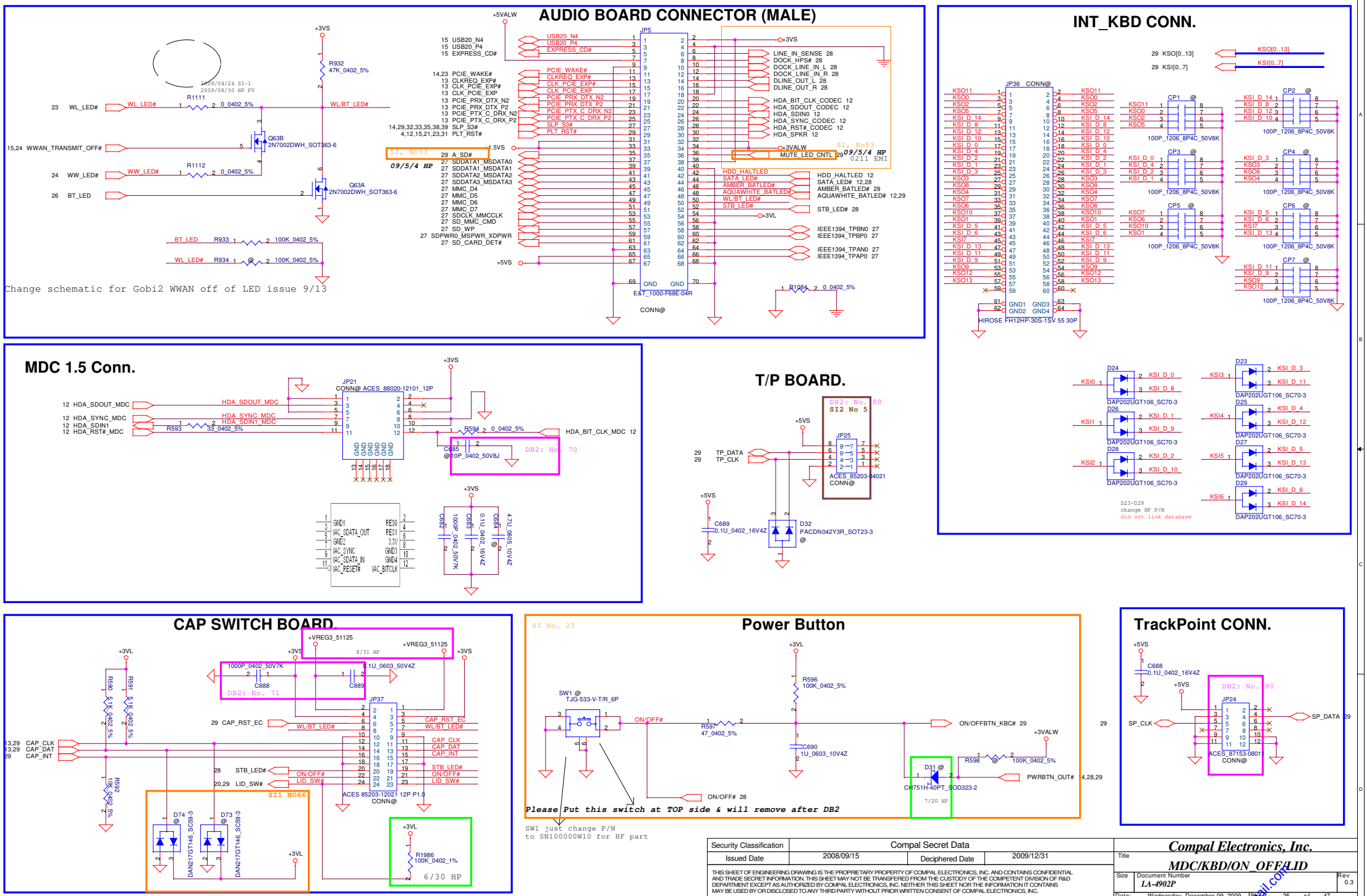

Security Classification	Compal Secret Data		
Issued Date	2008/09/15	Deciphered Date	2009/12/31

THIS SHEET OF ENGINEERING DRAWING IS THE PROPRIETARY PROPERTY OF COMPAL ELECTRONICS, INC. AND CONTAINS CONFIDENTIAL AND TRADE SECRET INFORMATION. THIS SHEET MAY NOT BE TRANSFERED FROM THE CUSTODY OF THE COMPETENT DIVISION OF R&D DEPARTMENT EXCEPT AS AUTHORIZED BY COMPAL ELECTRONICS, INC. NEITHER THIS SHEET NOR THE INFORMATION IT CONTAINS MAY BE USED BY OR DISCLOSED TO ANY THIRD PARTY WITHOUT PRIOR WRITTEN CONSENT OF COMPAL ELECTRONICS, INC.

Compal Electronics, Inc.

Title: MDC/KBD/ON_OFF/LID

Size: | Document Number: LA-4902P | Rev: 0.3

Date: Wednesday, December 09, 2009 | Sheet 25 of 47

hexainf@hotmail.com

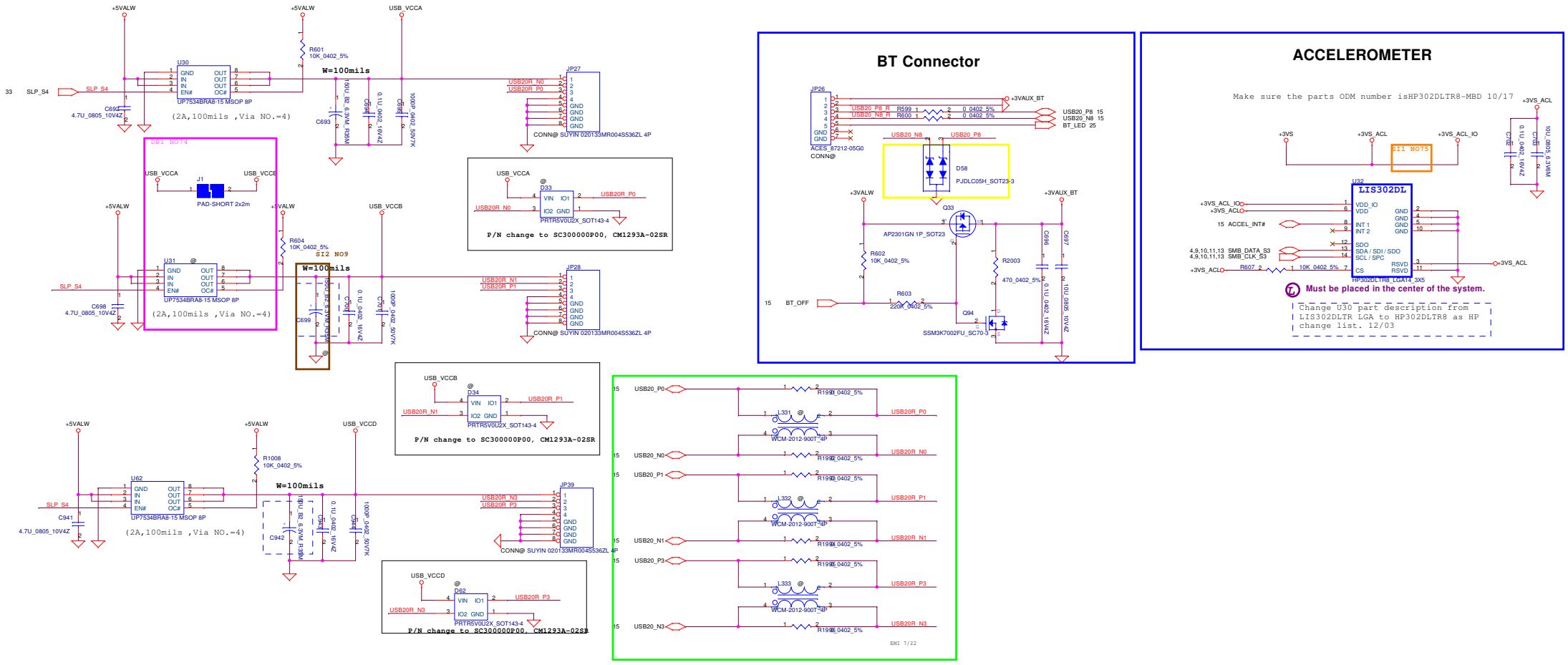

ESATA function

SI1 No72

09/5/14 HP

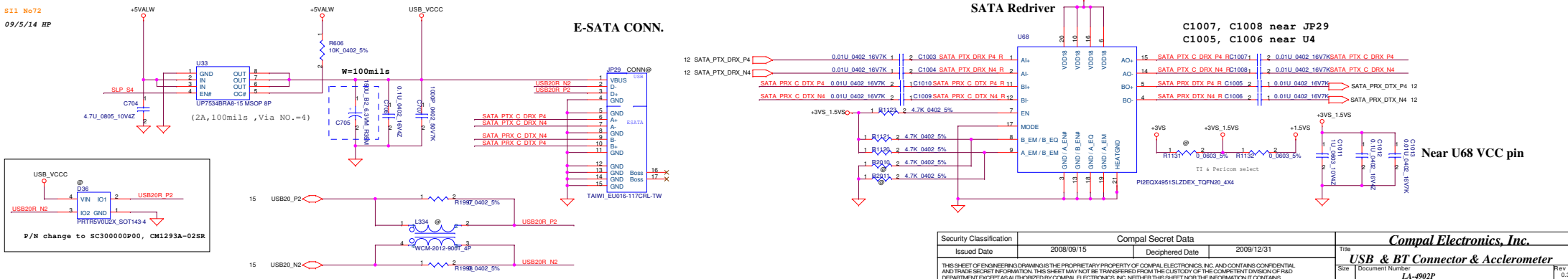

Security Classification	Compal Secret Data		
Issued Date	2008/09/15	Deciphered Date	2009/12/31

THIS SHEET OF ENGINEERING DRAWING IS THE PROPRIETARY PROPERTY OF COMPAL ELECTRONICS, INC. AND CONTAINS CONFIDENTIAL AND TRADE SECRET INFORMATION. THIS SHEET MAY NOT BE TRANSFERED FROM THE CUSTODY OF THE COMPETENT DIVISION OF R&D DEPARTMENT EXCEPT AS AUTHORIZED BY COMPAL ELECTRONICS, INC. NEITHER THIS SHEET NOR THE INFORMATION IT CONTAINS MAY BE USED BY OR DISCLOSED TO ANY THIRD PARTY WITHOUT PRIOR WRITTEN CONSENT OF COMPAL ELECTRONICS, INC.

Compal Electronics, Inc.

Title: **USB & BT Connector & Acclerometer**

Size	Document Number	Rev
	LA-4902P	0.3

Date: Wednesday, December 09, 2009 | Sheet 26 of 47

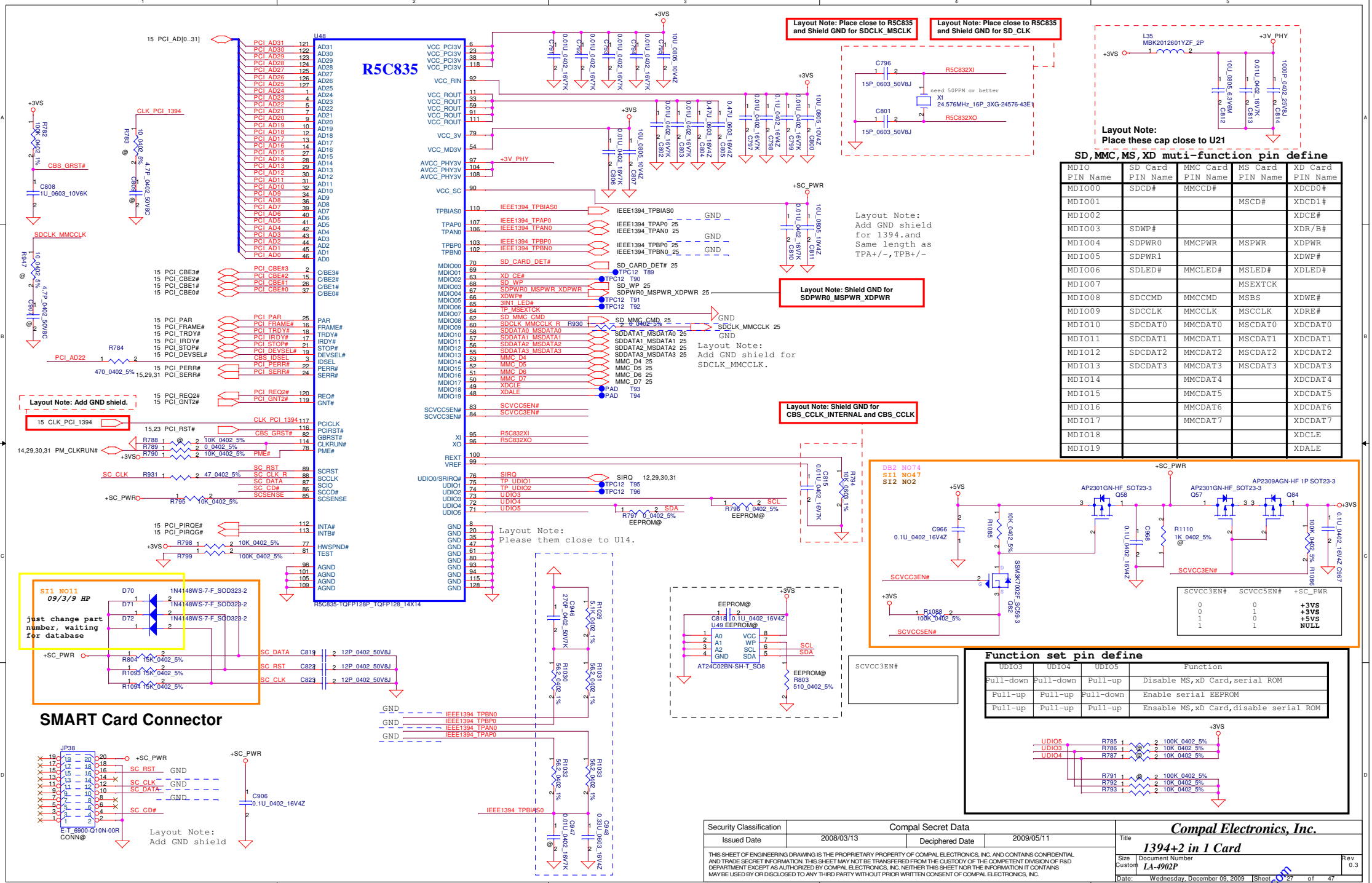

SD,MMC,MS,XD muti-function pin define

MDIO PIN Name	SD Card PIN Name	MMC Card PIN Name	MS Card PIN Name	XD Card PIN Name
MDIO00	SDCD#	MMCCD#		XDCD0#
MDIO01			MSCD#	XDCD1#
MDIO02				XDCE#
MDIO03	SDWP#			XDR/B#
MDIO04	SDPWR0	MMCPWR	MSPWR	XDPWR
MDIO05	SDPWR1			XDWP#
MDIO06	SDLED#	MMCLED#	MSLED#	XDLED#
MDIO07			MSEXTCK	
MDIO08	SDCCMD	MMCCMD	MSBS	XDWE#
MDIO09	SDCCLK	MMCCLK	MSCCLK	XDRE#
MDIO10	SDCDAT0	MMCDAT0	MSCDAT0	XDCDAT0
MDIO11	SDCDAT1	MMCDAT1	MSCDAT1	XDCDAT1
MDIO12	SDCDAT2	MMCDAT2	MSCDAT2	XDCDAT2
MDIO13	SDCDAT3	MMCDAT3	MSCDAT3	XDCDAT3
MDIO14		MMCDAT4		XDCDAT4
MDIO15		MMCDAT5		XDCDAT5
MDIO16		MMCDAT6		XDCDAT6
MDIO17		MMCDAT7		XDCDAT7
MDIO18				XDCLE
MDIO19				XDALE

Function set pin define

UDIO3	UDIO4	UDIO5	Function
Pull-down	Pull-down	Pull-up	Disable MS,xD Card,serial ROM
Pull-up	Pull-up	Pull-down	Enable serial EEPROM
Pull-up	Pull-up	Pull-up	Ensable MS,xD Card,disable serial ROM

Security Classification	Compal Secret Data		
Issued Date	2008/03/13	Deciphered Date	2009/05/11

THIS SHEET OF ENGINEERING DRAWING IS THE PROPRIETARY PROPERTY OF COMPAL ELECTRONICS, INC. AND CONTAINS CONFIDENTIAL AND TRADE SECRET INFORMATION. THIS SHEET MAY NOT BE TRANSFERED FROM THE CUSTODY OF THE COMPETENT DIVISION OF R&D DEPARTMENT EXCEPT AS AUTHORIZED BY COMPAL ELECTRONICS, INC. NEITHER THIS SHEET NOR THE INFORMATION IT CONTAINS MAY BE USED BY OR DISCLOSED TO ANY THIRD PARTY WITHOUT PRIOR WRITTEN CONSENT OF COMPAL ELECTRONICS, INC.

Compal Electronics, Inc.

Title: *1394+2 in 1 Card*

Size: Custom | Document Number: *LA-4902P* | Rev: 0.3

Date: Wednesday, December 09, 2009 | Sheet 27 of 47

hexainf@hotmail.com

DOCK CONN. 184PIN

DOCKING CONNECT

(1) PCI Express x1 channels
(2) PS/2 Interfaces
(2) USB 2.channels
(2) SATA Channels
(2) Display Port Channels
(1) Serial Port
(1) Parallel Port
(1) Line In
(1) Line Out
(1) RJ45 (10/100/1000)
(1) VGA
(1) 2 LAN indicator LED's
(1) Power Button
(1) I2C interface

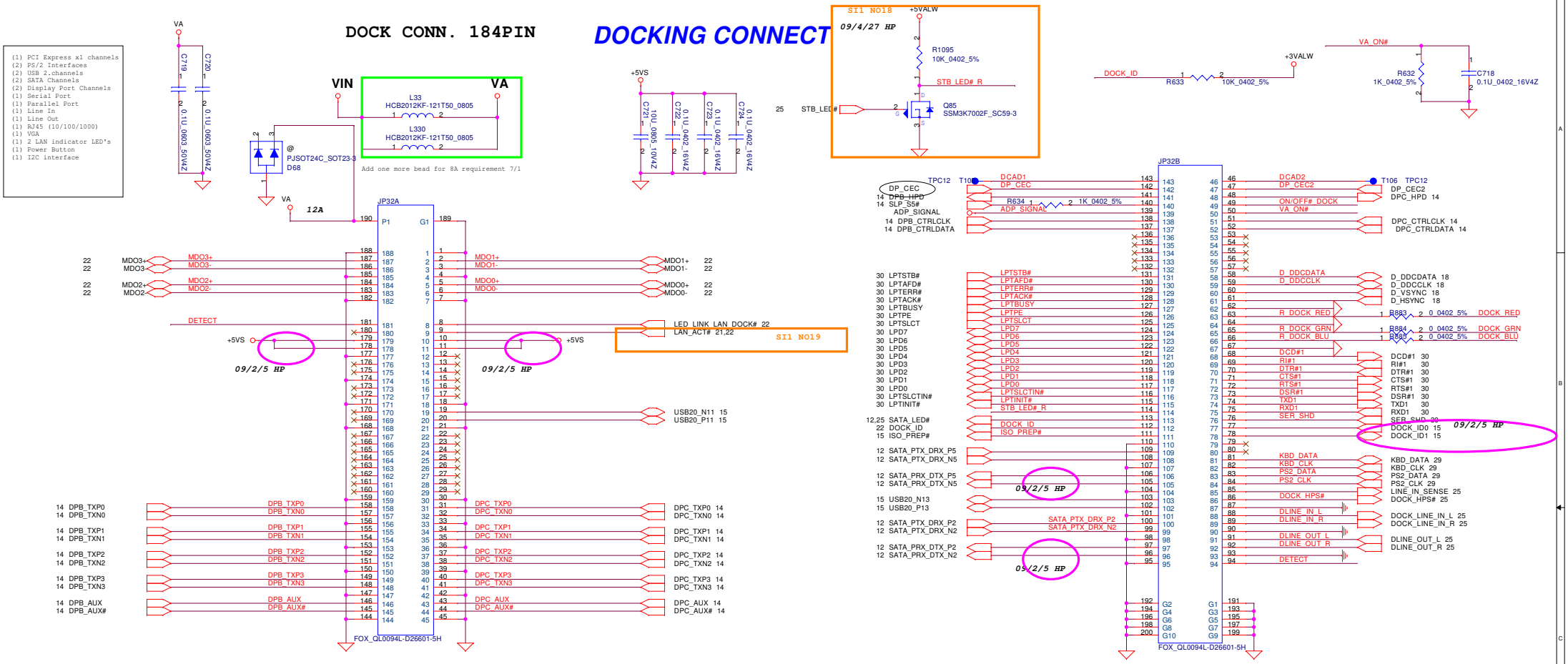

IN	NC<-->COM	NO<-->COM
L	ON	OFF
H	OFF	ON

Security Classification	Compal Secret Data		
Issued Date	2008/09/15	Deciphered Date	2009/12/31

THIS SHEET OF ENGINEERING DRAWING IS THE PROPRIETARY PROPERTY OF COMPAL ELECTRONICS, INC. AND CONTAINS CONFIDENTIAL AND TRADE SECRET INFORMATION. THIS SHEET MAY NOT BE TRANSFERED FROM THE CUSTODY OF THE COMPETENT DIVISION OF R&D DEPARTMENT EXCEPT AS AUTHORIZED BY COMPAL ELECTRONICS, INC. NEITHER THIS SHEET NOR THE INFORMATION IT CONTAINS MAY BE USED BY OR DISCLOSED TO ANY THIRD PARTY WITHOUT PRIOR WRITTEN CONSENT OF COMPAL ELECTRONICS, INC.

Compal Electronics, Inc.

Title: **DOCK CONN**

Size: Custom | Document Number: LA-4902P | Rev: 0.3

Date: Wednesday, December 09, 2009 | Sheet 28 of 47

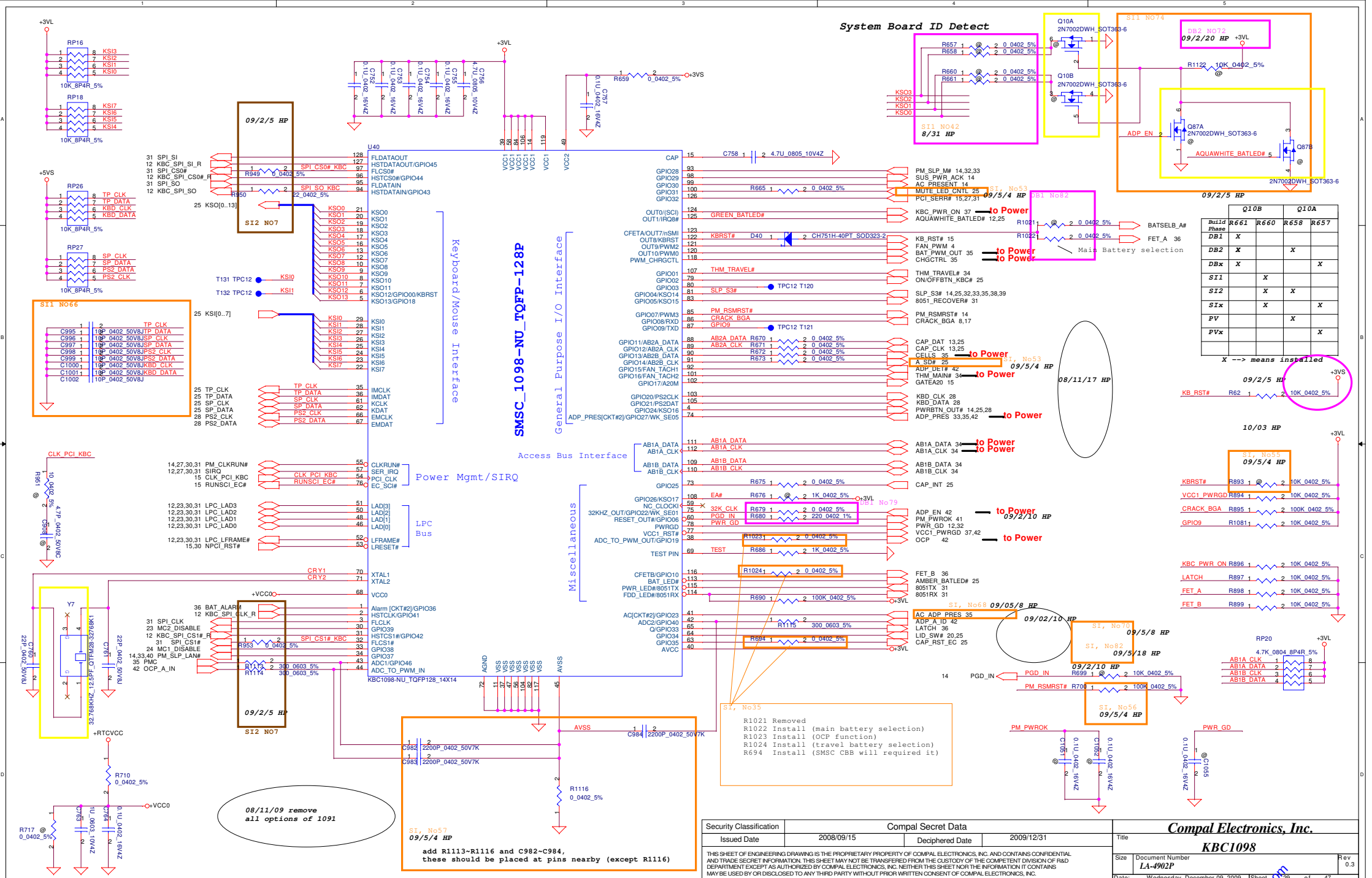
System Board ID Detect
SMSC_1098-NU_TQFP-128P
U40
KBC1098-NU_TQFP128_14X14
Keyboard/Mouse Interface
General Purpose I/O Interface
Access Bus Interface
Power Mgmt/SIRQ
LPC Bus
Miscellaneous
09/2/5 HP
SI2 NO7
SI1 NO66
SI1 NO42
8/31 HP
SI1 NO74
DB2 NO72
09/2/20 HP
Q10A
2N7002DWH_SOT363-6
Q10B
2N7002DWH_SOT363-6
Q87A
Q87B
AQUAWHITE_BATLED#
ADP_EN
SI, No53
09/5/4 HP
DB1 No82
Main Battery selection
08/11/17 HP
09/2/10 HP
SI, No68 09/05/8 HP
SI, No70
09/5/8 HP
SI, No82
09/5/18 HP
SI, No56
09/5/4 HP
SI, No55
09/5/4 HP
10/03 HP
SI, No35
R1021 Removed
R1022 Install (main battery selection)
R1023 Install (OCP function)
R1024 Install (travel battery selection)
R694 Install (SMSC CBB will required it)
08/11/09 remove
all options of 1091
SI, No57
09/5/4 HP
add R1113~R1116 and C982~C984,
these should be placed at pins nearby (except R1116)
Q10B Q10A
Build Phase R661 R660 R658 R657
DB1 X
DB2 X X
DBx X X
SI1 X
SI2 X X
SIx X X
PV X
PVx X
X --> means installed
Security Classification Compal Secret Data
Issued Date 2008/09/15 Deciphered Date 2009/12/31
Compal Electronics, Inc.
KBC1098
Size Document Number LA-4902P Rev 0.3
Date: Wednesday, December 09, 2009 Sheet 29 of 47
hexainf@hotmail.com

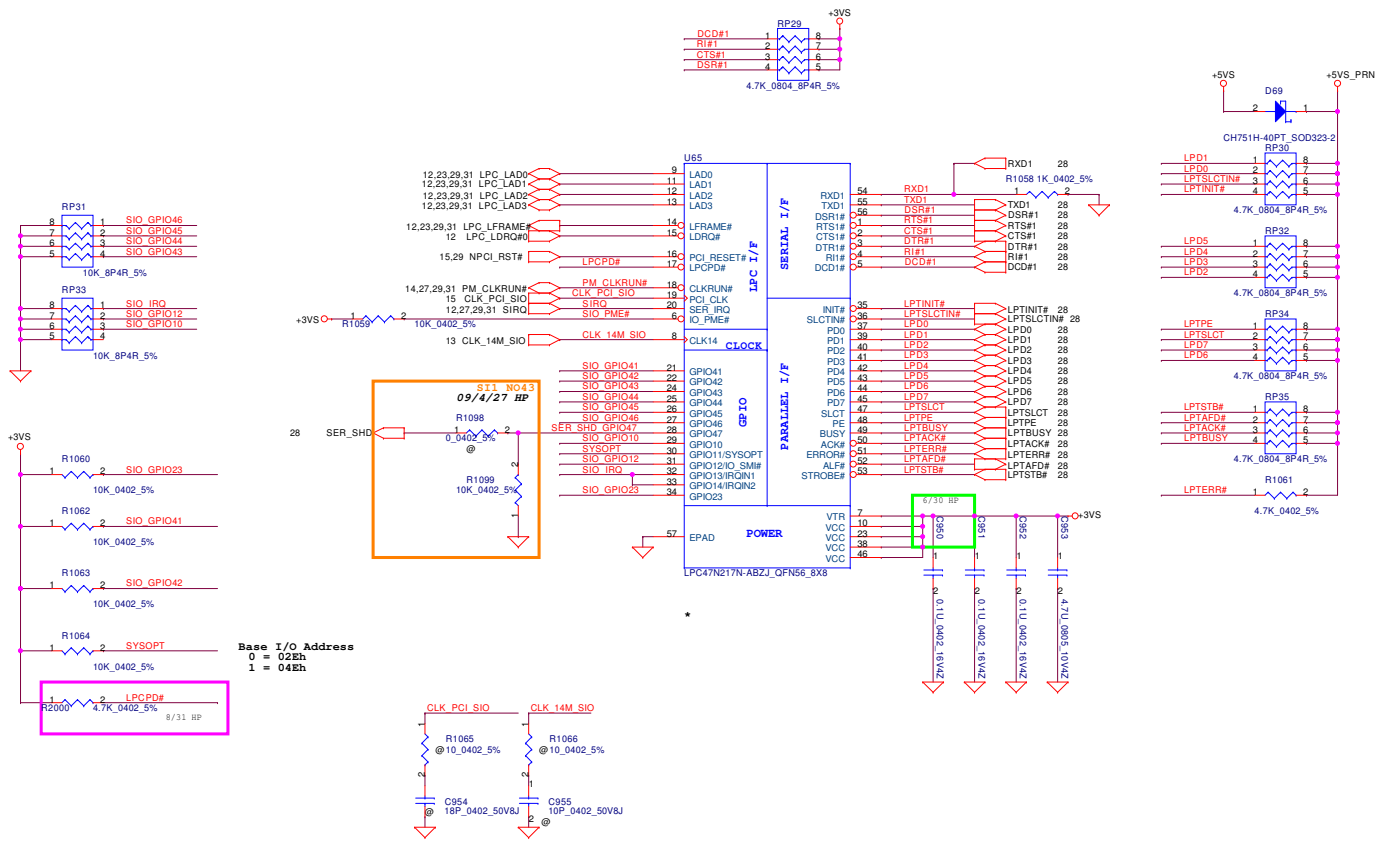

Security Classification	Compal Secret Data		
Issued Date	2008/09/09	Deciphered Date	2009/09/09

THIS SHEET OF ENGINEERING DRAWING IS THE PROPRIETARY PROPERTY OF COMPAL ELECTRONICS, INC. AND CONTAINS CONFIDENTIAL AND TRADE SECRET INFORMATION. THIS SHEET MAY NOT BE TRANSFERED FROM THE CUSTODY OF THE COMPETENT DIVISION OF R&D DEPARTMENT EXCEPT AS AUTHORIZED BY COMPAL ELECTRONICS, INC. NEITHER THIS SHEET NOR THE INFORMATION IT CONTAINS MAY BE USED BY OR DISCLOSED TO ANY THIRD PARTY WITHOUT PRIOR WRITTEN CONSENT OF COMPAL ELECTRONICS, INC.

Compal Electronics, Inc.

Title: **LPC47N217N-ABZJ_QFN**

Size	Document Number	Rev
	LA-4902P	0.3

Date: Wednesday, December 09, 2009 | Sheet 30 of 47

Finger Printer

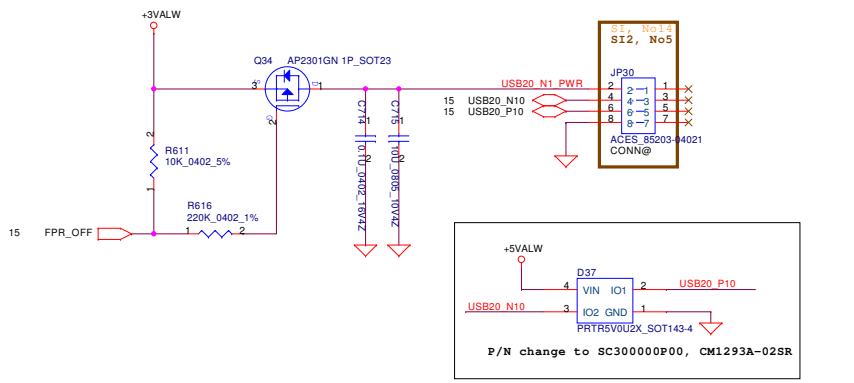

TPM1.2 on board

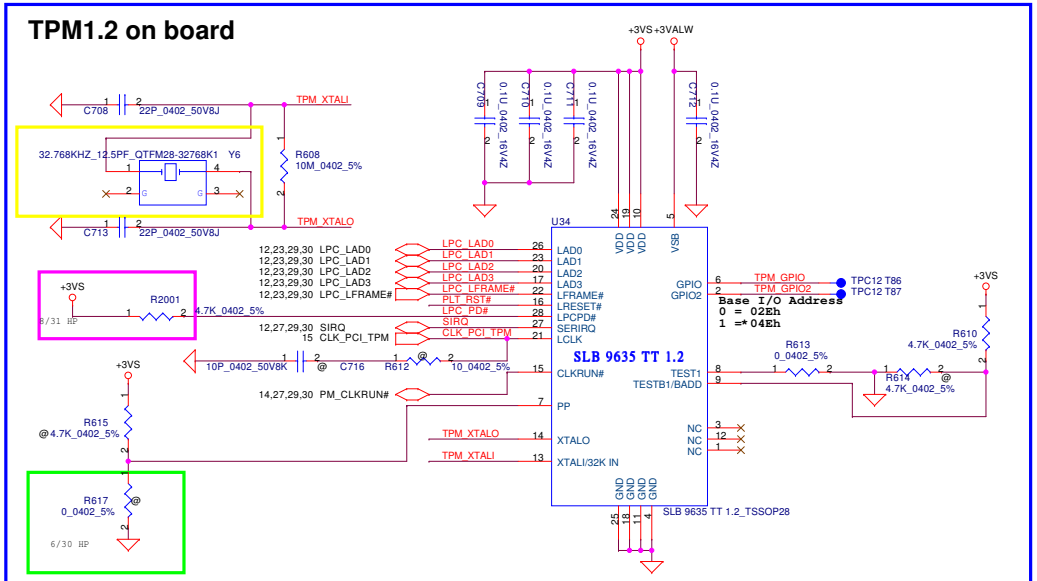

BIOS ROM(8MB)

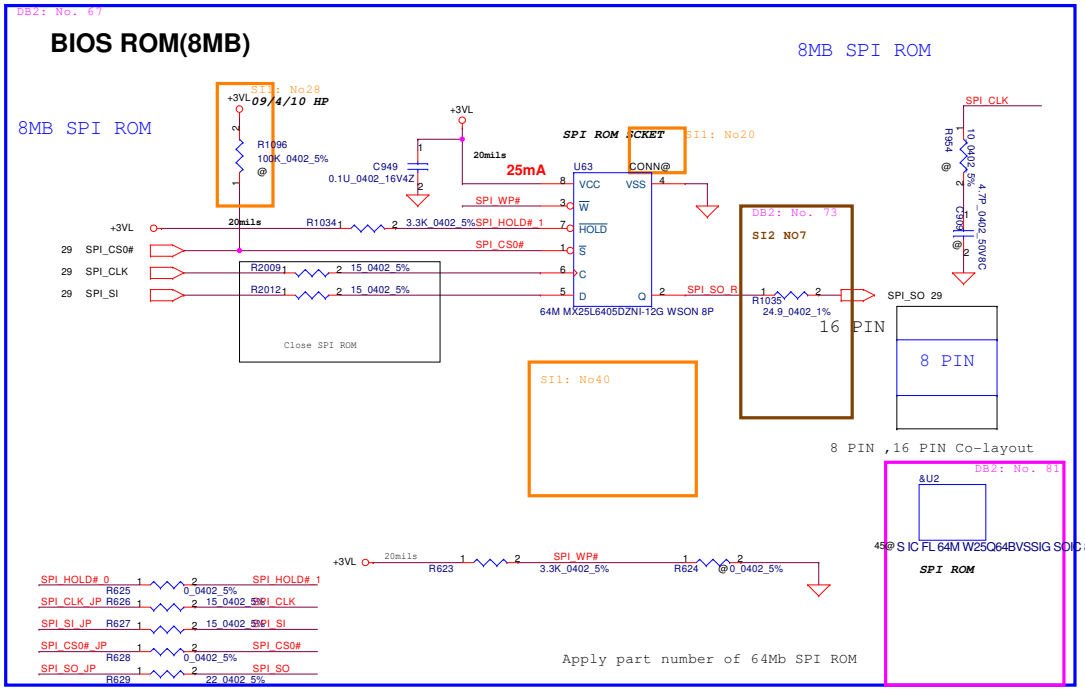

LPC Debug Port

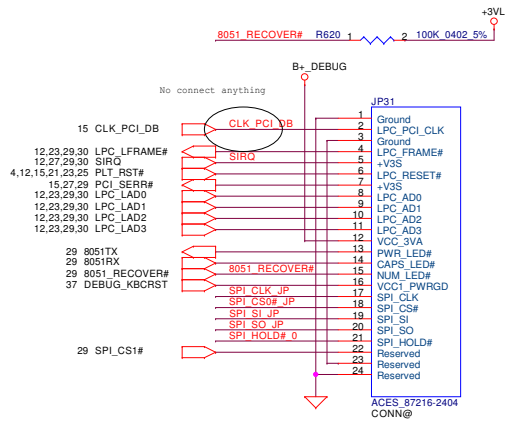

Security Classification	Compal Secret Data		
Issued Date	2008/09/15	Deciphered Date	2009/12/31

THIS SHEET OF ENGINEERING DRAWING IS THE PROPRIETARY PROPERTY OF COMPAL ELECTRONICS, INC. AND CONTAINS CONFIDENTIAL AND TRADE SECRET INFORMATION. THIS SHEET MAY NOT BE TRANSFERED FROM THE CUSTODY OF THE COMPETENT DIVISION OF R&D DEPARTMENT EXCEPT AS AUTHORIZED BY COMPAL ELECTRONICS, INC. NEITHER THIS SHEET NOR THE INFORMATION IT CONTAINS MAY BE USED BY OR DISCLOSED TO ANY THIRD PARTY WITHOUT PRIOR WRITTEN CONSENT OF COMPAL ELECTRONICS, INC.

Compal Electronics, Inc.

Title: TCG/BIOS ROM/PS2/SW LPC DEBUG

Size | Document Number: LA-4902P | Rev: 0.3

Date: Wednesday, December 09, 2009 | Sheet 31 of 47

hexainf@hotmail.com

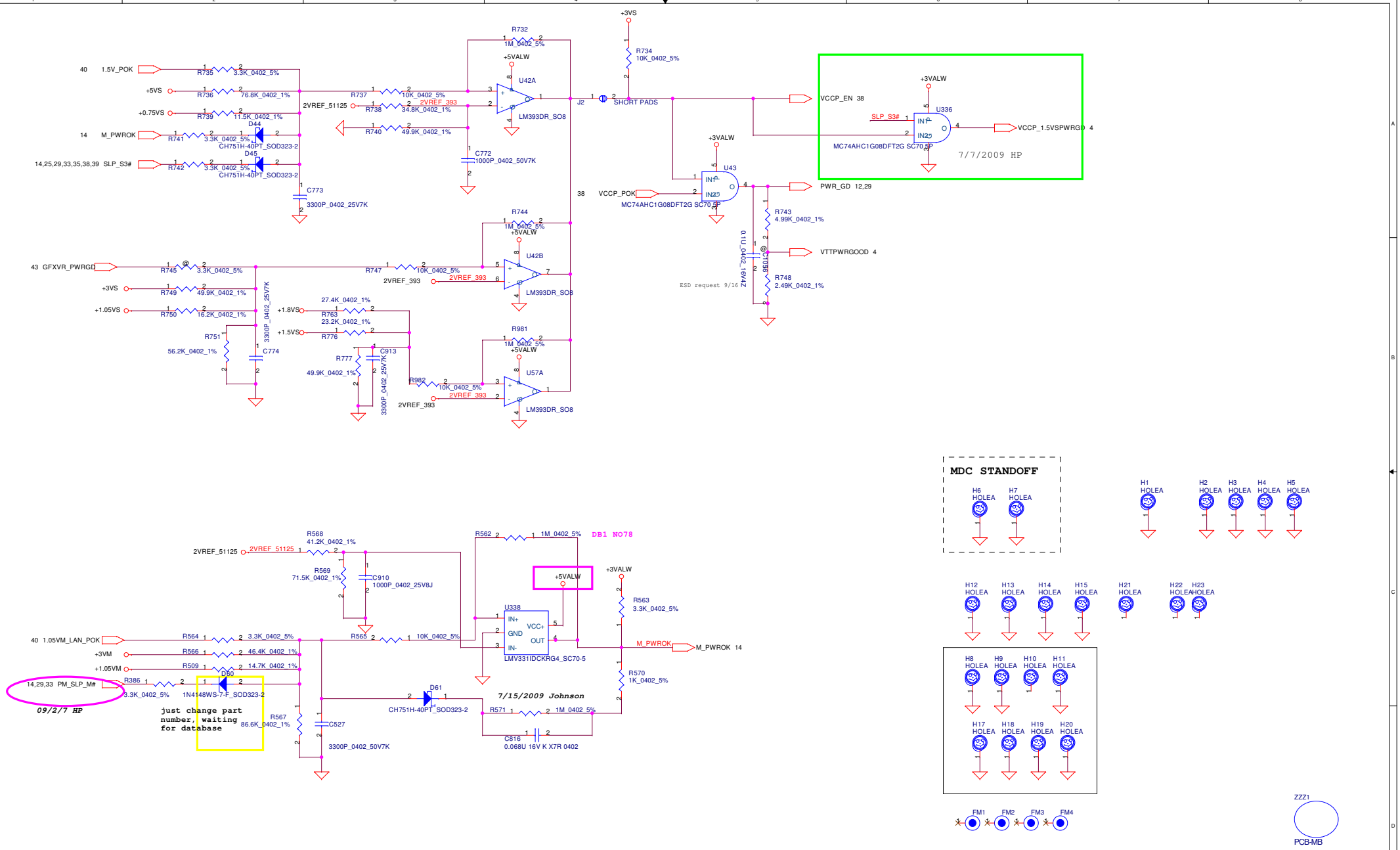

Security Classification	Compal Secret Data		
Issued Date	2008/09/15	Deciphered Date	2009/12/31

THIS SHEET OF ENGINEERING DRAWING IS THE PROPRIETARY PROPERTY OF COMPAL ELECTRONICS, INC. AND CONTAINS CONFIDENTIAL AND TRADE SECRET INFORMATION. THIS SHEET MAY NOT BE TRANSFERED FROM THE CUSTODY OF THE COMPETENT DIVISION OF R&D DEPARTMENT EXCEPT AS AUTHORIZED BY COMPAL ELECTRONICS, INC. NEITHER THIS SHEET NOR THE INFORMATION IT CONTAINS MAY BE USED BY OR DISCLOSED TO ANY THIRD PARTY WITHOUT PRIOR WRITTEN CONSENT OF COMPAL ELECTRONICS, INC.

Compal Electronics, Inc.

Title: **POK CKT**

Size: | Document Number: *LA-4902P* | Rev: 0.3

Date: Wednesday, December 09, 2009 | Sheet 32 of 47

+1.05VM_LAN to +1.05VS Transfer

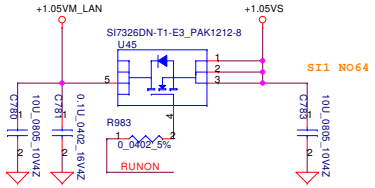

+3VALW to +3VS Transfer

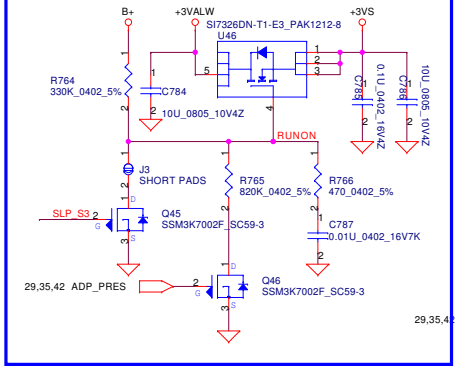

+5VALW to +5VS Transfer

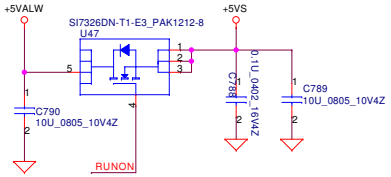

+3VALW to +3VM Transfer

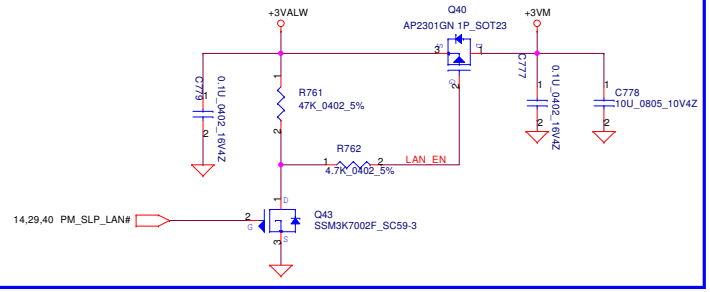

+1.05VM_LAN to +1.05VM Transfer

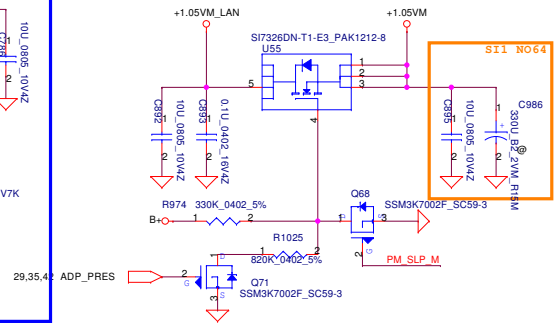

10/17 HP correct it

Discharge circuit-2 for V-M

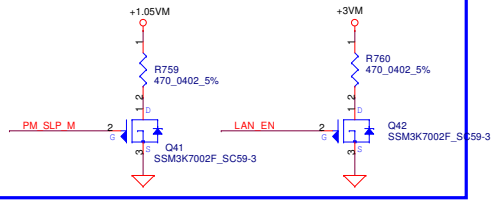

+1.5V to +1.5VS Transfer

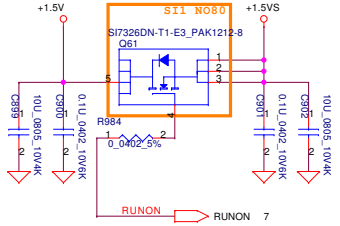

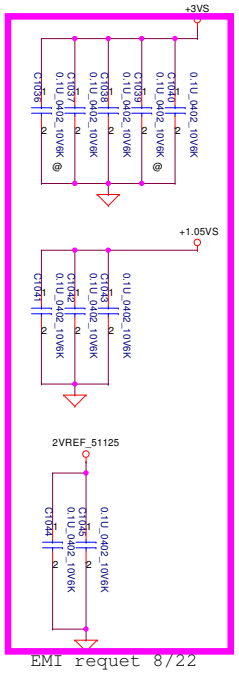

EMI requet 8/22

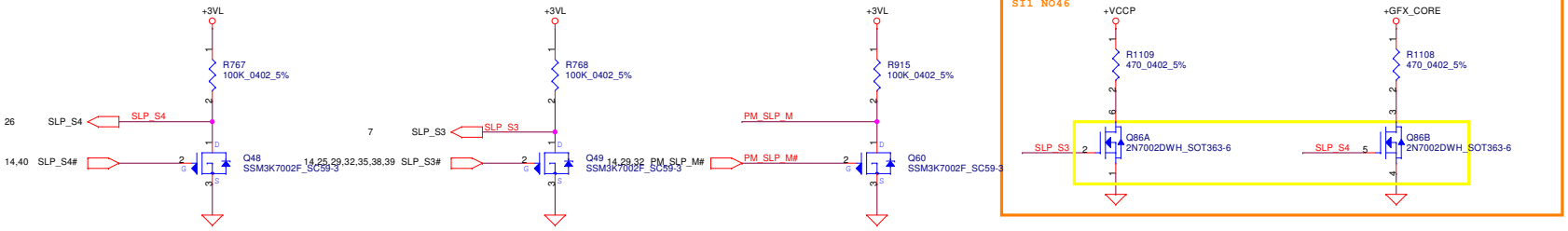

Discharge circuit-1

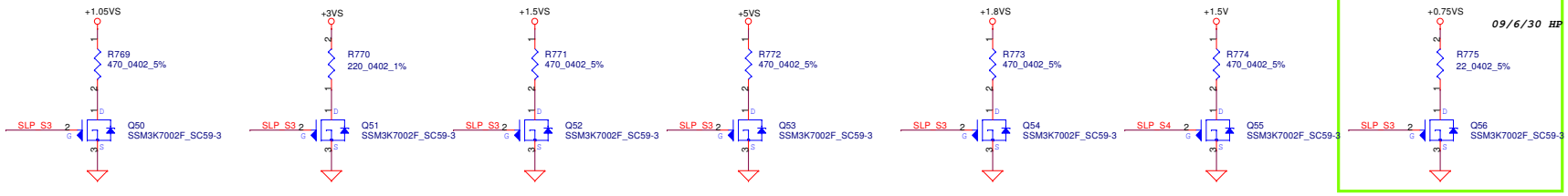

Security Classification	Compal Secret Data		
Issued Date	2008/09/15	Deciphered Date	2009/12/31

THIS SHEET OF ENGINEERING DRAWING IS THE PROPRIETARY PROPERTY OF COMPAL ELECTRONICS, INC. AND CONTAINS CONFIDENTIAL AND TRADE SECRET INFORMATION. THIS SHEET MAY NOT BE TRANSFERED FROM THE CUSTODY OF THE COMPETENT DIVISION OF R&D DEPARTMENT EXCEPT AS AUTHORIZED BY COMPAL ELECTRONICS, INC. NEITHER THIS SHEET NOR THE INFORMATION IT CONTAINS MAY BE USED BY OR DISCLOSED TO ANY THIRD PARTY WITHOUT PRIOR WRITTEN CONSENT OF COMPAL ELECTRONICS, INC.

Compal Electronics, Inc.

Title: **DC/DC Circuits**

Size: | Document Number: LA-4902P | Rev: 0.3

Date: Wednesday, December 09, 2009 | Sheet 33 of 47

hexainf@hotmail.com

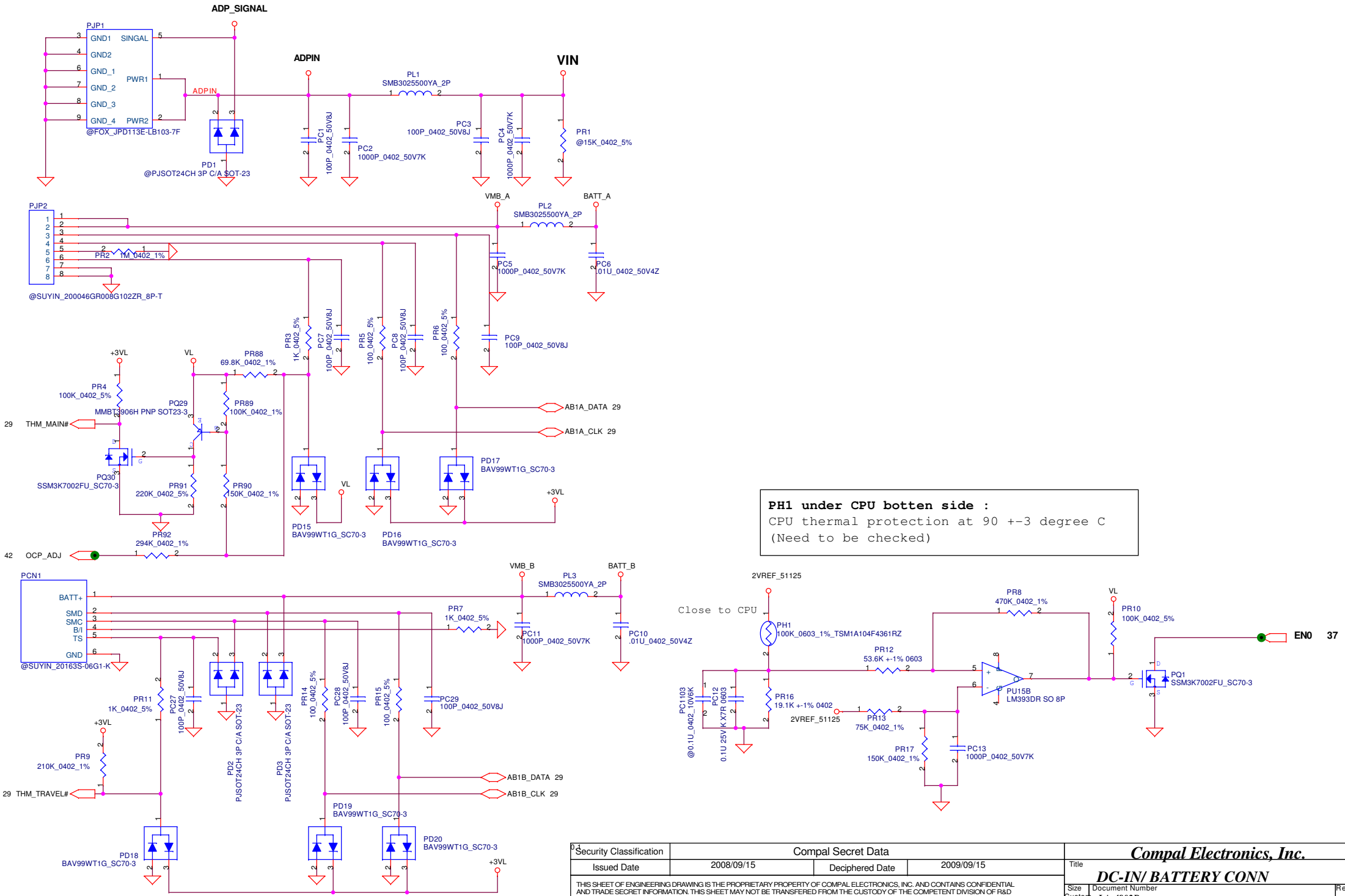

PH1 under CPU botten side :
CPU thermal protection at 90 +-3 degree C
(Need to be checked)

Security Classification	Compal Secret Data		
Issued Date	2008/09/15	Deciphered Date	2009/09/15

THIS SHEET OF ENGINEERING DRAWING IS THE PROPRIETARY PROPERTY OF COMPAL ELECTRONICS, INC. AND CONTAINS CONFIDENTIAL AND TRADE SECRET INFORMATION. THIS SHEET MAY NOT BE TRANSFERED FROM THE CUSTODY OF THE COMPETENT DIVISION OF R&D DEPARTMENT EXCEPT AS AUTHORIZED BY COMPAL ELECTRONICS, INC. NEITHER THIS SHEET NOR THE INFORMATION IT CONTAINS MAY BE USED BY OR DISCLOSED TO ANY THIRD PARTY WITHOUT PRIOR WRITTEN CONSENT OF COMPAL ELECTRONICS, INC.

Compal Electronics, Inc.

Title: **DC-IN/ BATTERY CONN**

Size: Custom | Document Number: LA-4902P | Rev

Date: Wednesday, December 09, 2009 | Sheet 34 of 44

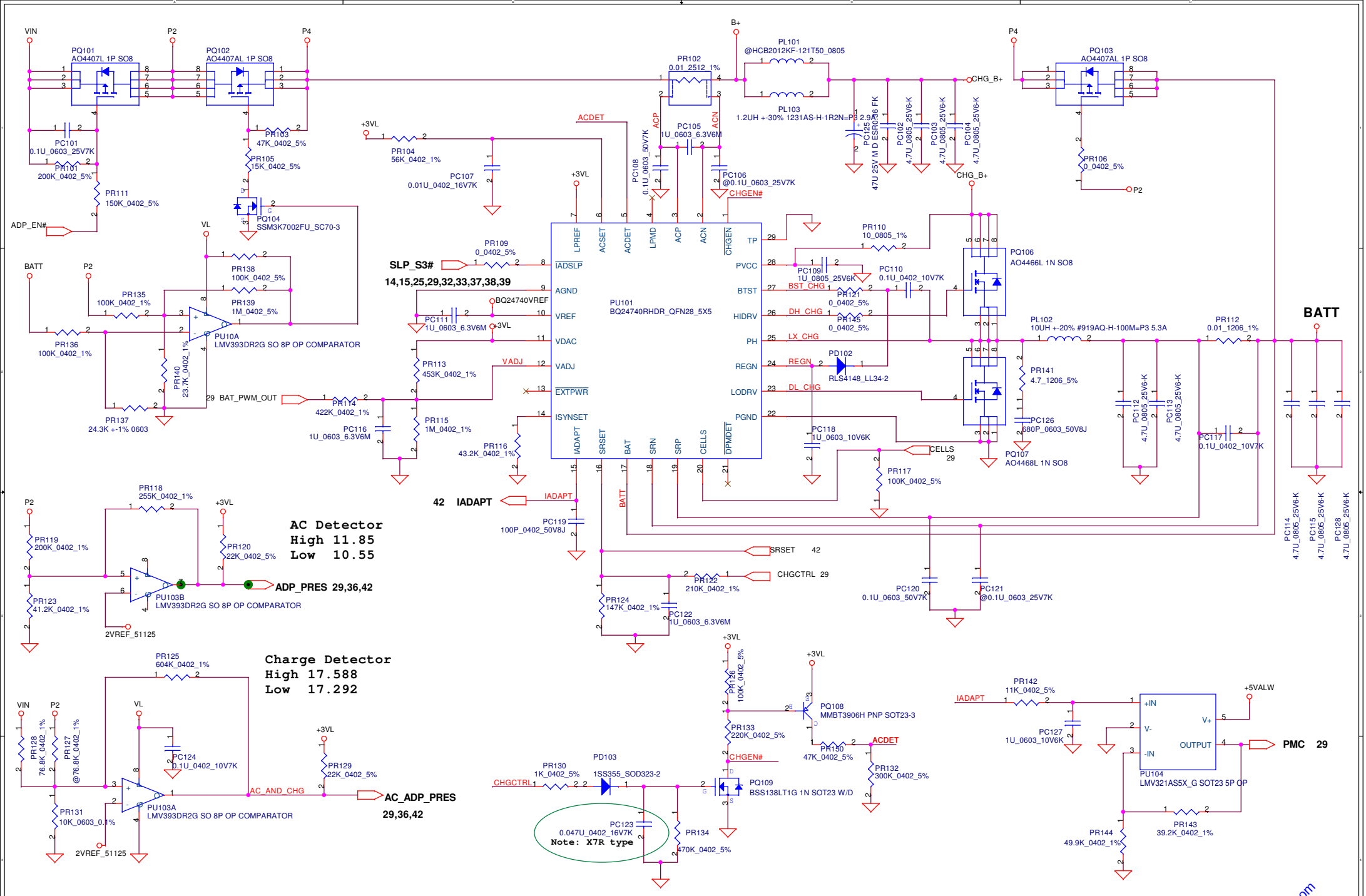

Security Classification	Compal Secret Data		
Issued Date	2008/09/15	Deciphered Date	2009/09/15

THIS SHEET OF ENGINEERING DRAWING IS THE PROPRIETARY PROPERTY OF COMPAL ELECTRONICS, INC. AND CONTAINS CONFIDENTIAL AND TRADE SECRET INFORMATION. THIS SHEET MAY NOT BE TRANSFERED FROM THE CUSTODY OF THE COMPETENT DIVISION OF R&D DEPARTMENT EXCEPT AS AUTHORIZED BY COMPAL ELECTRONICS, INC. NEITHER THIS SHEET NOR THE INFORMATION IT CONTAINS MAY BE USED BY OR DISCLOSED TO ANY THIRD PARTY WITHOUT PRIOR WRITTEN CONSENT OF COMPAL ELECTRONICS, INC.

Compal Electronics, Inc.

Title: **Charger**

Size: | Document Number: **LA-4902P** | Rev: 0.1

Date: Wednesday, December 09, 2009 | Sheet 35 of 44

hexainf@hotmail.com

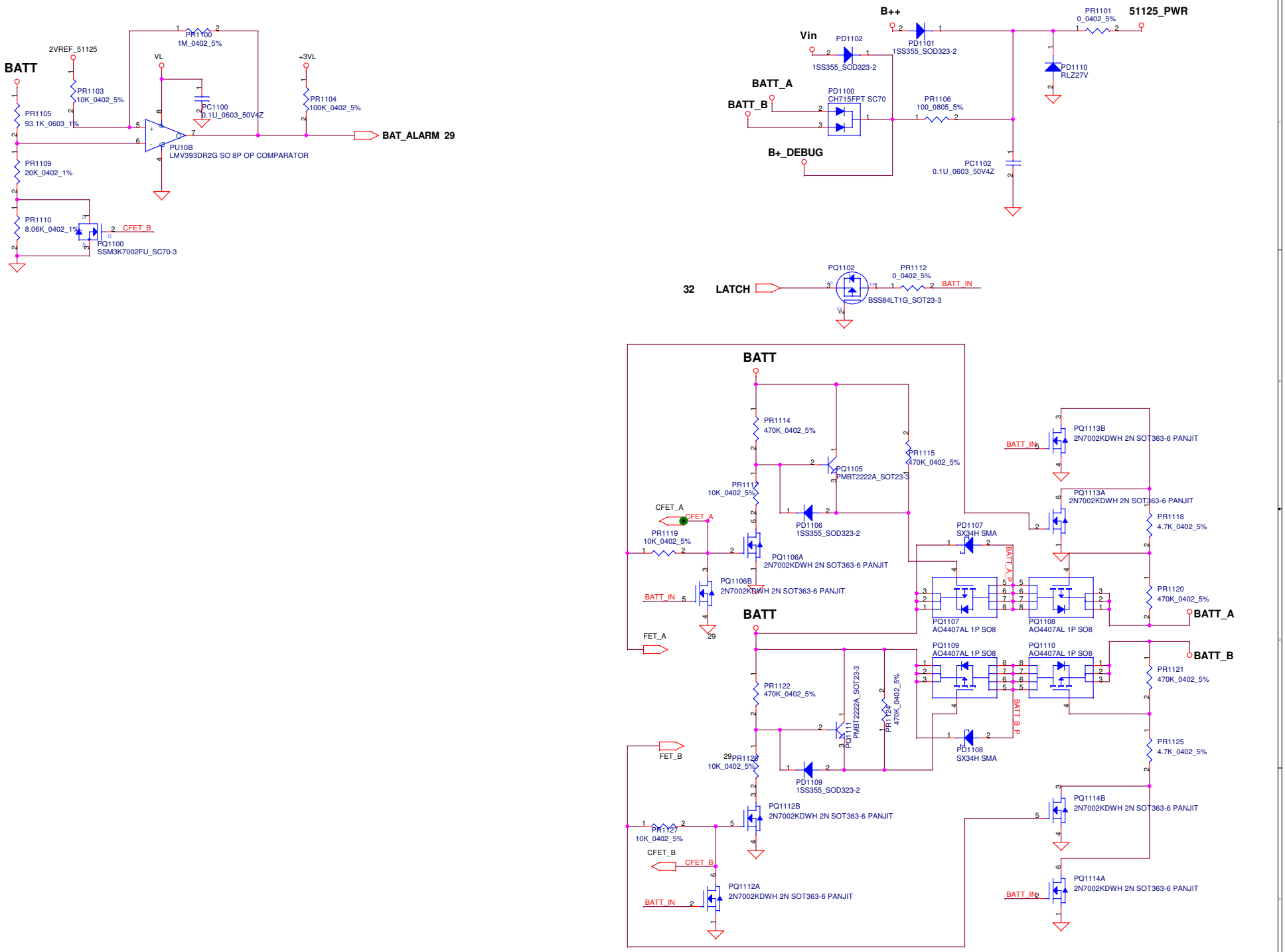

Security Classification	Compal Secret Data		
Issued Date	2008/09/15	Deciphered Date	2009/09/15

THIS SHEET OF ENGINEERING DRAWING IS THE PROPRIETARY PROPERTY OF COMPAL ELECTRONICS, INC. AND CONTAINS CONFIDENTIAL AND TRADE SECRET INFORMATION. THIS SHEET MAY NOT BE TRANSFERED FROM THE CUSTODY OF THE COMPETENT DIVISION OF R&D DEPARTMENT EXCEPT AS AUTHORIZED BY COMPAL ELECTRONICS, INC. NEITHER THIS SHEET NOR THE INFORMATION IT CONTAINS MAY BE USED BY OR DISCLOSED TO ANY THIRD PARTY WITHOUT PRIOR WRITTEN CONSENT OF COMPAL ELECTRONICS, INC.

Compal Electronics, Inc.

Title: **Battery selector**

Size: Custom | Document Number: **LA-4902P** | Rev

Date: Wednesday, December 09, 2009 | Sheet 36 of 44

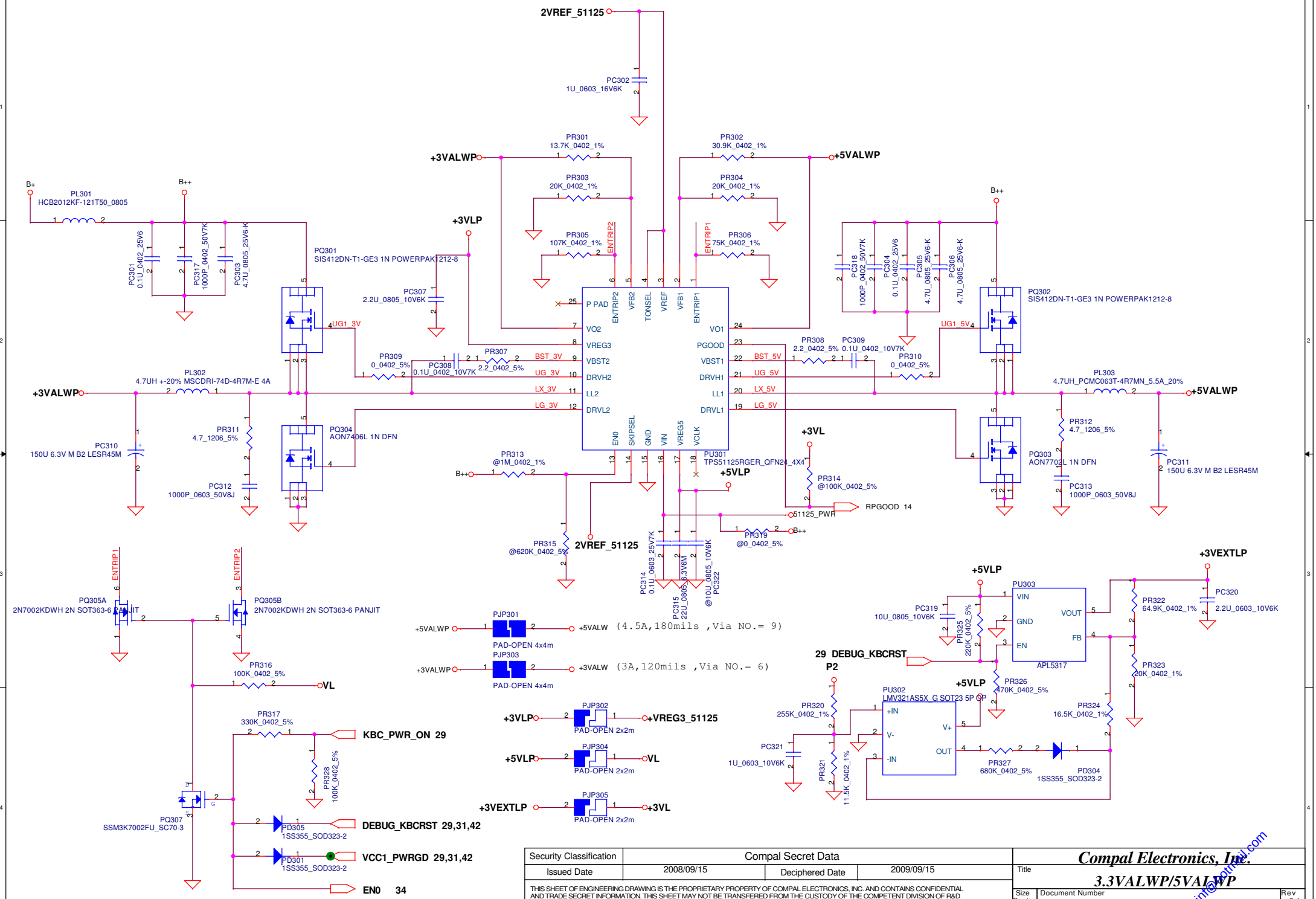

Security Classification	Compal Secret Data		
Issued Date	2008/09/15	Deciphered Date	2009/09/15

THIS SHEET OF ENGINEERING DRAWING IS THE PROPRIETARY PROPERTY OF COMPAL ELECTRONICS, INC. AND CONTAINS CONFIDENTIAL AND TRADE SECRET INFORMATION. THIS SHEET MAY NOT BE TRANSFERRED FROM THE CUSTODY OF THE COMPETENT DIVISION OF R&D DEPARTMENT EXCEPT AS AUTHORIZED BY COMPAL ELECTRONICS, INC. NEITHER THIS SHEET NOR THE INFORMATION IT CONTAINS MAY BE USED BY OR DISCLOSED TO ANY THIRD PARTY WITHOUT PRIOR WRITTEN CONSENT OF COMPAL ELECTRONICS, INC.

Compal Electronics, Inc.

Title: **3.3VALWP/5VALWP**

Size: Custom | Document Number: *LA-4902P* | Rev: 0.1

Date: Wednesday, December 09, 2009 | Sheet 37 of 44

seyain@hotmail.com

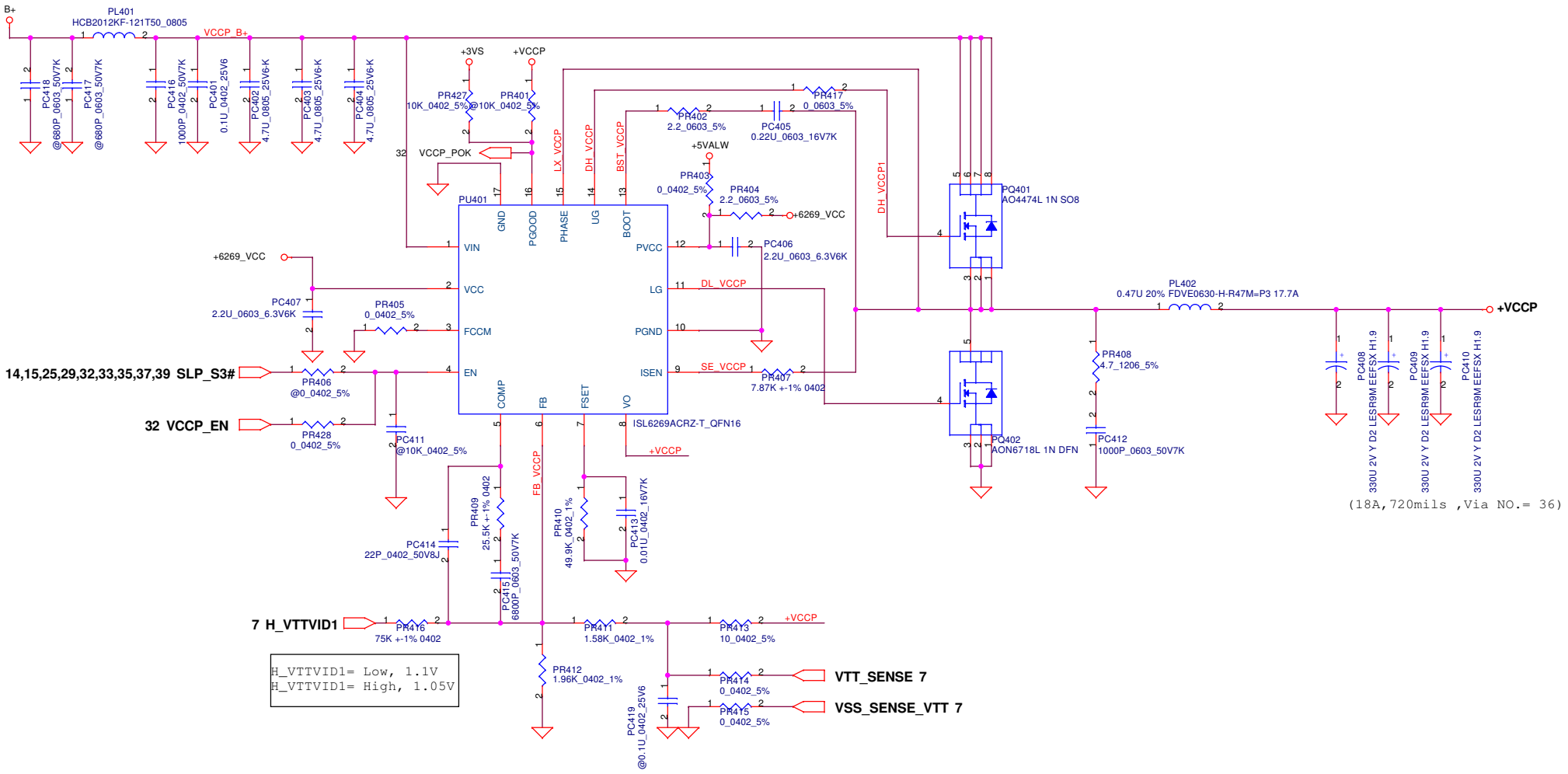

Security Classification	Compal Secret Data		
Issued Date	2008/09/15	Deciphered Date	2009/09/15

THIS SHEET OF ENGINEERING DRAWING IS THE PROPRIETARY PROPERTY OF COMPAL ELECTRONICS, INC. AND CONTAINS CONFIDENTIAL AND TRADE SECRET INFORMATION. THIS SHEET MAY NOT BE TRANSFERED FROM THE CUSTODY OF THE COMPETENT DIVISION OF R&D DEPARTMENT EXCEPT AS AUTHORIZED BY COMPAL ELECTRONICS, INC. NEITHER THIS SHEET NOR THE INFORMATION IT CONTAINS MAY BE USED BY OR DISCLOSED TO ANY THIRD PARTY WITHOUT PRIOR WRITTEN CONSENT OF COMPAL ELECTRONICS, INC.

Compal Electronics, Inc.

Title: **1.05V_VCCP**

Size	Document Number	Rev
	LA-4902P	0.1

Date: Wednesday, December 09, 2009 | Sheet 38 of 44

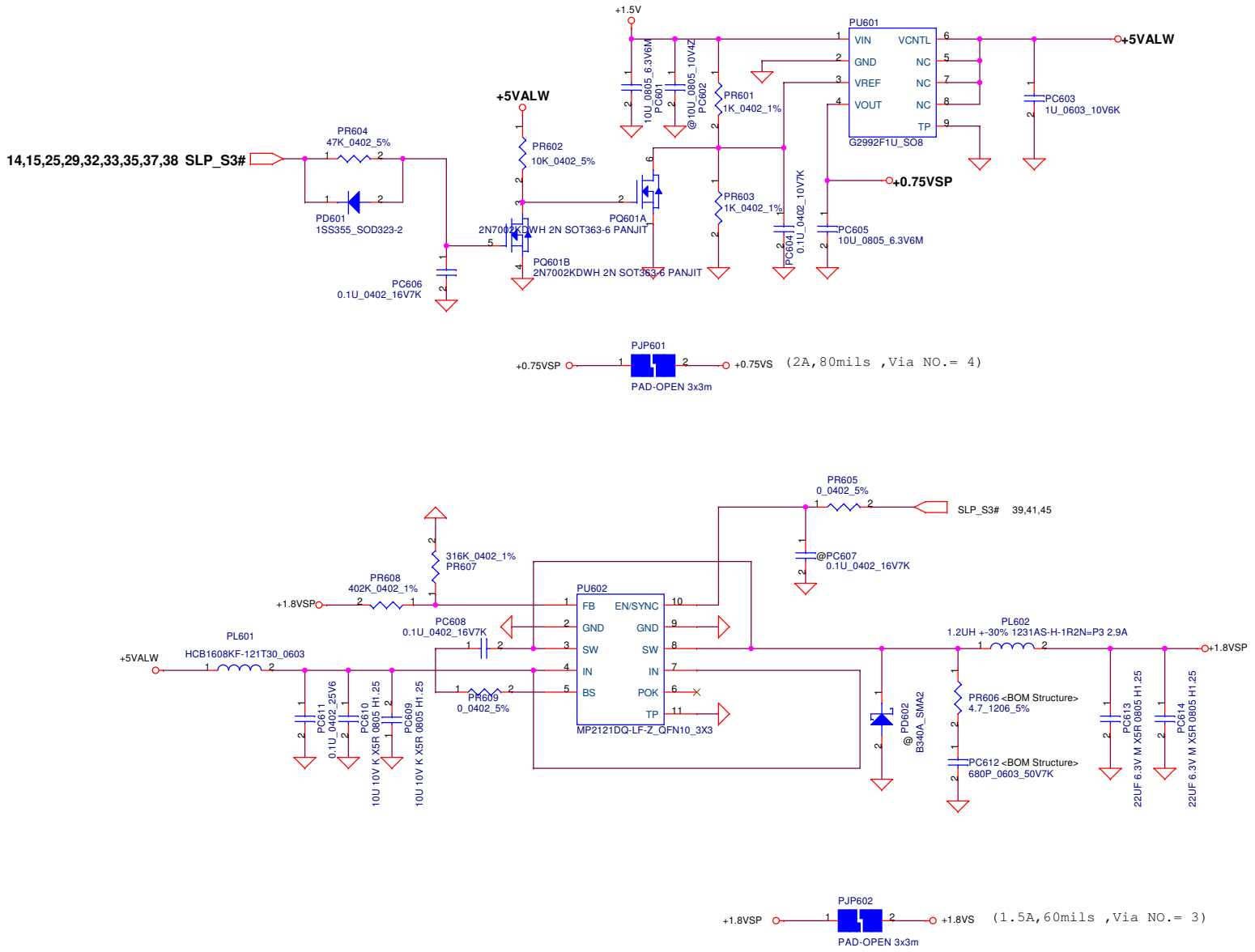

Security Classification	Compal Secret Data		
Issued Date	2008/09/15	Deciphered Date	2009/09/15

THIS SHEET OF ENGINEERING DRAWING IS THE PROPRIETARY PROPERTY OF COMPAL ELECTRONICS, INC. AND CONTAINS CONFIDENTIAL AND TRADE SECRET INFORMATION. THIS SHEET MAY NOT BE TRANSFERED FROM THE CUSTODY OF THE COMPETENT DIVISION OF R&D DEPARTMENT EXCEPT AS AUTHORIZED BY COMPAL ELECTRONICS, INC. NEITHER THIS SHEET NOR THE INFORMATION IT CONTAINS MAY BE USED BY OR DISCLOSED TO ANY THIRD PARTY WITHOUT PRIOR WRITTEN CONSENT OF COMPAL ELECTRONICS, INC.

Compal Electronics, Inc.

Title: **0.75VSP/1.8VSP**

Size: | Document Number: *LA-4902P* | Rev: 0.1

Date: Wednesday, December 09, 2009 | Sheet 39 of 44

hexainf@hotmail.com

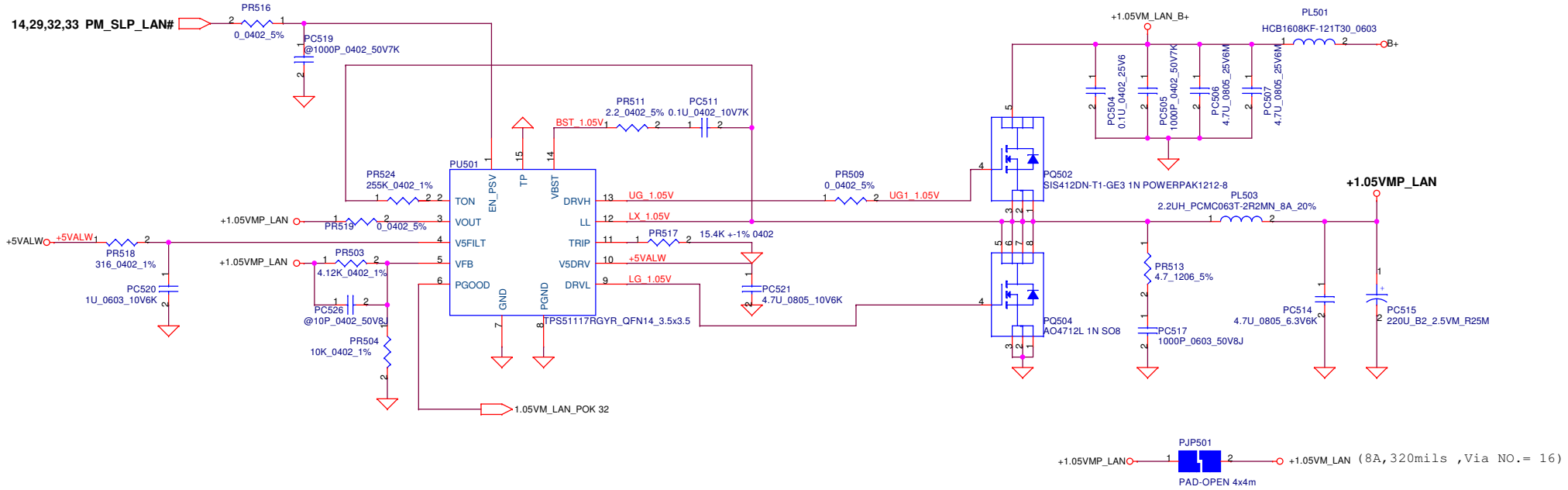

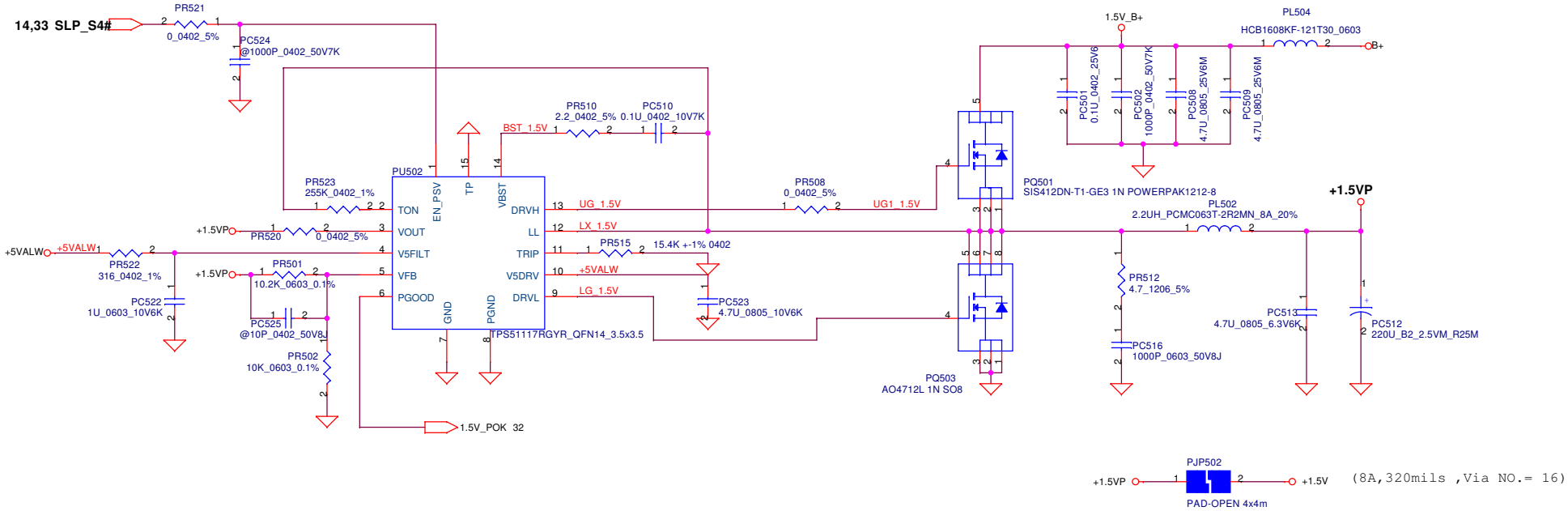

Security Classification	Compal Secret Data		
Issued Date	2008/09/15	Deciphered Date	2009/09/15

THIS SHEET OF ENGINEERING DRAWING IS THE PROPRIETARY PROPERTY OF COMPAL ELECTRONICS, INC. AND CONTAINS CONFIDENTIAL AND TRADE SECRET INFORMATION. THIS SHEET MAY NOT BE TRANSFERED FROM THE CUSTODY OF THE COMPETENT DIVISION OF R&D DEPARTMENT EXCEPT AS AUTHORIZED BY COMPAL ELECTRONICS, INC. NEITHER THIS SHEET NOR THE INFORMATION IT CONTAINS MAY BE USED BY OR DISCLOSED TO ANY THIRD PARTY WITHOUT PRIOR WRITTEN CONSENT OF COMPAL ELECTRONICS, INC.

Compal Electronics, Inc.

Title: **1.5VP/1.05VMP**

Size | Document Number: *LA-4902P* | Rev 0.1

Date: Wednesday, December 09, 2009 | Sheet 40 of 44

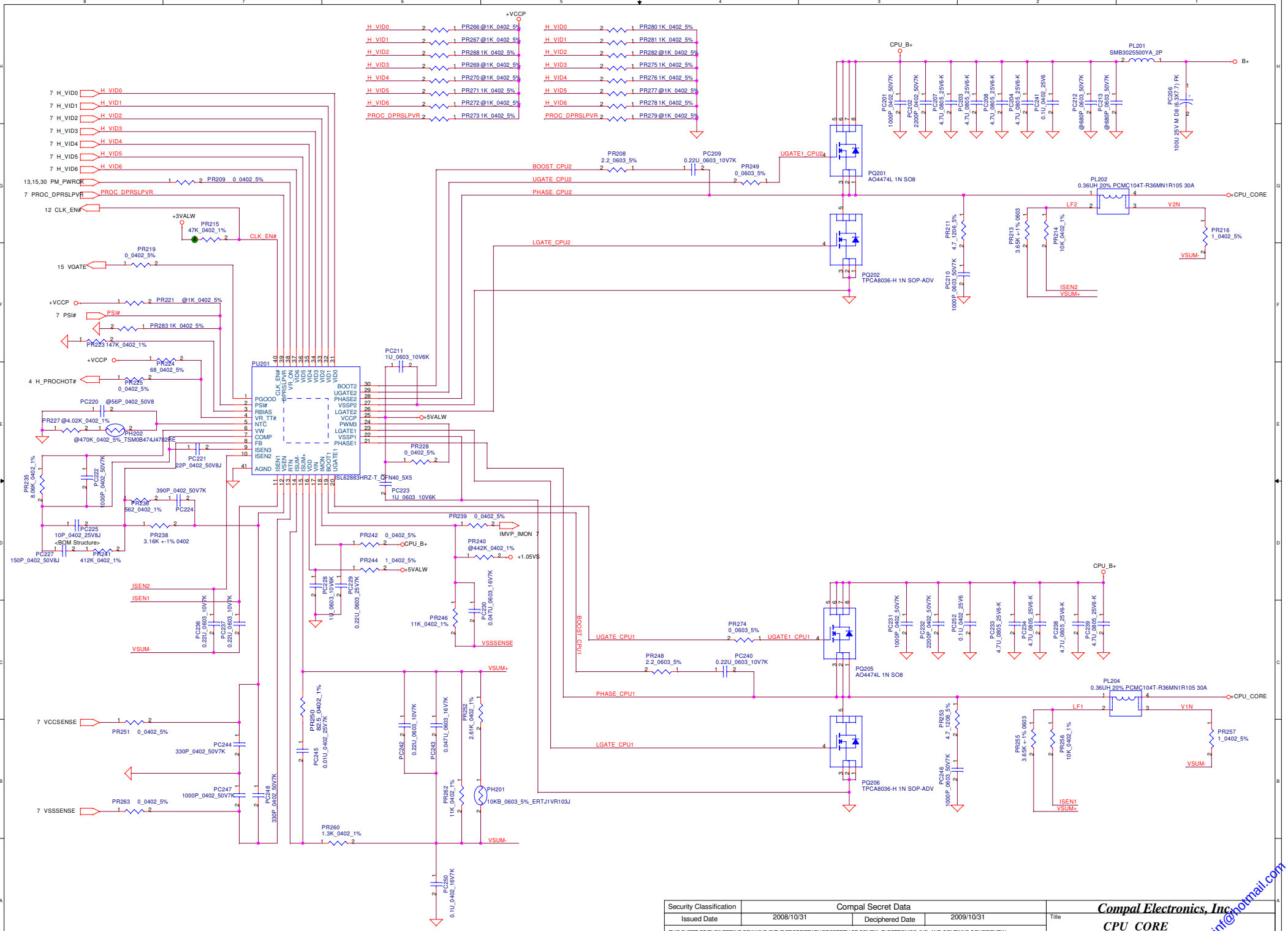

Security Classification	Compal Secret Data		
Issued Date	2008/10/31	Deciphered Date	2009/10/31

THIS SHEET OF ENGINEERING DRAWING IS THE PROPRIETARY PROPERTY OF COMPAL ELECTRONICS, INC. AND CONTAINS CONFIDENTIAL AND TRADE SECRET INFORMATION. THIS SHEET MAY NOT BE TRANSFERED FROM THE CUSTODY OF THE COMPETENT DIVISION OF R&D DEPARTMENT EXCEPT AS AUTHORIZED BY COMPAL ELECTRONICS, INC. NEITHER THIS SHEET NOR THE INFORMATION IT CONTAINS MAY BE USED BY OR DISCLOSED TO ANY THIRD PARTY WITHOUT PRIOR WRITTEN CONSENT OF COMPAL ELECTRONICS, INC.

Compal Electronics, Inc.

Title: CPU_CORE

Size: | Document Number: LA-3942P | Rev: 0.1

Date: Wednesday, December 09, 2009 | Sheet 41 of 44

hexainf@hotmail.com

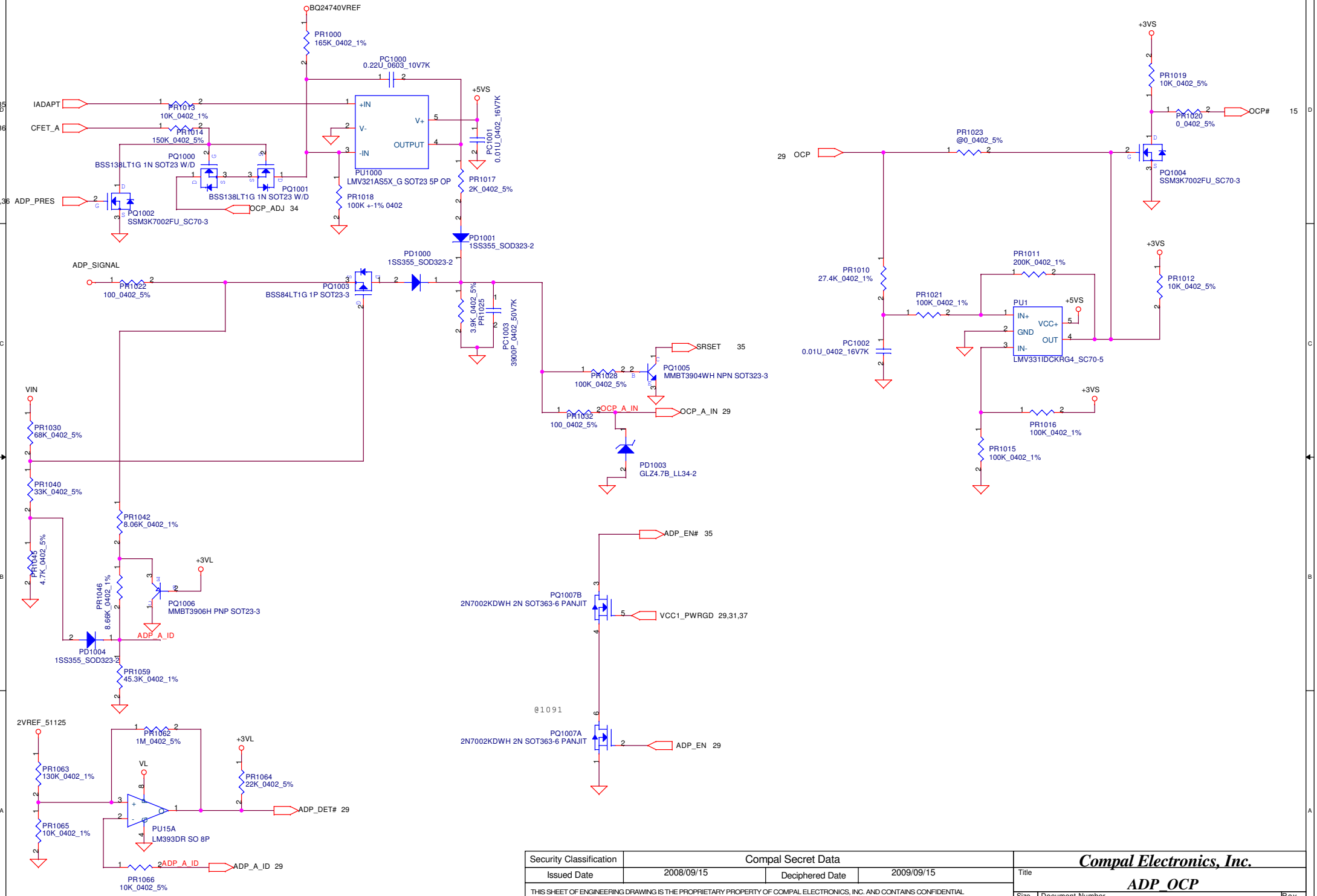

Security Classification	Compal Secret Data		
Issued Date	2008/09/15	Deciphered Date	2009/09/15

THIS SHEET OF ENGINEERING DRAWING IS THE PROPRIETARY PROPERTY OF COMPAL ELECTRONICS, INC. AND CONTAINS CONFIDENTIAL AND TRADE SECRET INFORMATION. THIS SHEET MAY NOT BE TRANSFERED FROM THE CUSTODY OF THE COMPETENT DIVISION OF R&D DEPARTMENT EXCEPT AS AUTHORIZED BY COMPAL ELECTRONICS, INC. NEITHER THIS SHEET NOR THE INFORMATION IT CONTAINS MAY BE USED BY OR DISCLOSED TO ANY THIRD PARTY WITHOUT PRIOR WRITTEN CONSENT OF COMPAL ELECTRONICS, INC.

Compal Electronics, Inc.

Title: **ADP_OCP**

Size: Custom | Document Number: *LA-4902P* | Rev

Date: Wednesday, December 09, 2009 | Sheet 42 of 44

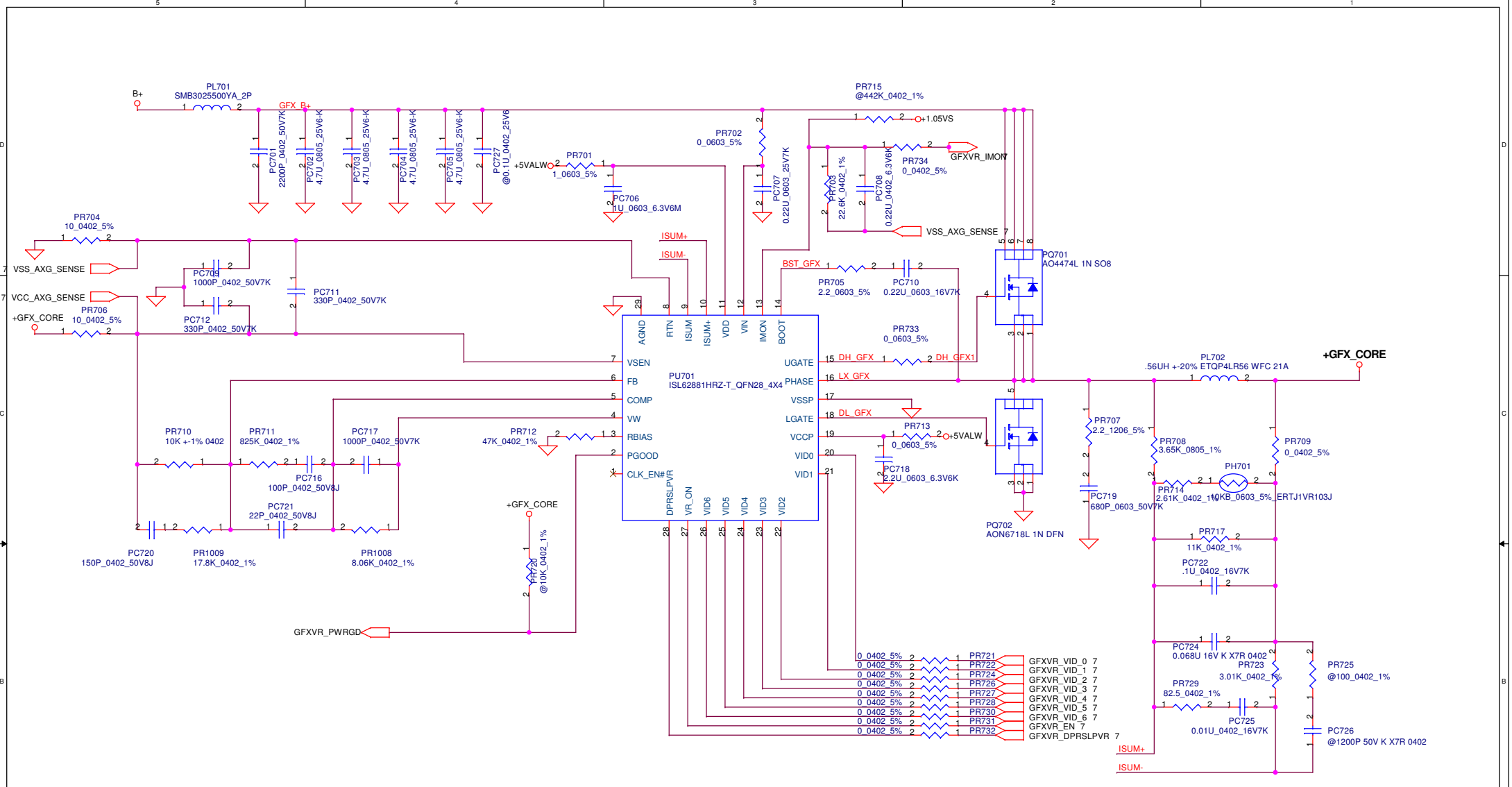

Security Classification	Compal Secret Data		
Issued Date	2008/10/31	Deciphered Date	2009/10/31

THIS SHEET OF ENGINEERING DRAWING IS THE PROPRIETARY PROPERTY OF COMPAL ELECTRONICS, INC. AND CONTAINS CONFIDENTIAL AND TRADE SECRET INFORMATION. THIS SHEET MAY NOT BE TRANSFERED FROM THE CUSTODY OF THE COMPETENT DIVISION OF R&D DEPARTMENT EXCEPT AS AUTHORIZED BY COMPAL ELECTRONICS, INC. NEITHER THIS SHEET NOR THE INFORMATION IT CONTAINS MAY BE USED BY OR DISCLOSED TO ANY THIRD PARTY WITHOUT PRIOR WRITTEN CONSENT OF COMPAL ELECTRONICS, INC.

Compal Electronics, Inc.

Title: **VCCGFX**

Size: Custom | Document Number: *LA-3942P* | Rev

Date: Wednesday, December 09, 2009 | Sheet 43 of 44

sexaint@hotmail.com

Item	Reason for change	PG#	Modify List	Date	Phase
1					
2					
3					
4					
5					
6					
7					

THIS SHEET OF ENGINEERING DRAWING IS THE PROPRIETARY PROPERTY OF COMPAL ELECTRONICS, INC. AND CONTAINS CONFIDENTIAL AND TRADE SECRET INFORMATION. THIS SHEET MAY NOT BE TRANSFERRED FROM THE CUSTODY OF THE COMPETENT DIVISION OF R&D DEPARTMENT EXCEPT AS AUTHORIZED BY COMPAL ELECTRONICS, INC. NEITHER THIS SHEET NOR THE INFORMATION IT CONTAINS MAY BE USED BY OR DISCLOSED TO ANY THIRD PARTY WITHOUT PRIOR WRITTEN CONSENT OF COMPAL ELECTRONICS, INC.

2/2

No1. P21, LED0 and LED1 nets reversed
No2. P16, for HP item 84, R294,R295,C274 value change
No3. P20, due to JEDP1 42pin to 30 pin, redefining the signals,
please remember to change footprint, symbol, part number.
No4. P20, JEDP1 change footprint and value
No5. P14,15, delete PCH LVDS signals and USB_5 for LVDS_CAMERA
No6. P21, LED0 and LED1 change back.
No7. P23, HDD/ODD footprint modified.
No8. P20, add 2 pins on JEDP1 by myself, different from database part
No9. P20, use real JEDP1 from database

No10. P12, for HP item 69, delete SMB_DATA_S3, SMB_CLK_S3 and add 2 test points
No11. P14, for HP item 78, install R2Z7
No12. P29, for HP item 82, KB_RST# pull high to +3VS
No13. P4, for HP item 85, unistall R997 and del R40
No14. P4, for HP item 97, delete R34,R36,R37,R46,R49 and change name
of XDP_TDI & XDP_TDO, and short XDP_TDI_M to XDP_TDO_M
No15. P4, for HP item 98, add a series R between pin3 and 5 on U54
No16. P21, for HP item 99, delete C484-C487, C945, R427, R428, R963, Q18
No17. P22, for HP item 100, delete Q80A
No18. P22, for HP item 101, Source and Drain of Q80B are swapped and change to a single 2N7002

No20. P12&P29, for HP item 103, change R948, R949, R952, R953,
R939, R176, R180, R940 to 0ohm and R950 to 33ohm
No21. P28, for HP item 104, Connect +5VS to JP32 pins 11, 178, 179.
No22. P11, for HP item 105, R141 is connected to +1.05VS
No23. P24, for HP item 106, Del R1006 and and Q70A. Replace Q70B with a single 7002
No24. P28, for HP item 107, Delete R635-R638 and short the signals
No25. P12, for HP item 108, Delete C201, C203-C205 and short the signals
No26. P21, for HP item 110, LED0 and LED1 nets reversed again
No27. P22, for HP item 111, Control signal for Q80B.GATE should be LAN_DIS#
No28. P7, for HP item 112, NO INSTALL R967 for ES1 silicon
No29. P12, for HP item 113, INSTALL R847 and change to 1Kohm.
Connect R847.1 to Q66.1 and remove the GND connection at R847.1.
No30. P12, for HP item 80, install R184 and R190
No31. P15 & P28, for HP item 79, GPIO38 and GPIO39 on U4 connect DOCK_ID0
and DOCK_ID1 to the docking connector pins 77 and 78
No32. P15, for HP item 60, delete R283
No33. P29, for HP item 66, chenge KSO4 to KSO3, change 10K to 0 Ohm, change the Table, add a NOR gate
No34. for No 18, change Q80 Source and Drain pin back.

No35. P32, for HP item 115, change PM_SLP_LAN# to PM_SLP_M# at R386-1
No36. P24, for HP item 116, circuits recuperation because of canceling item 106
No37. P19, for HP item 117, swap DPD_CTRLDATA and DPD_CTRLCLK,
AUX connects to CLK and AUX# connects to DATA,
add isolation nFET in series with Q74A and Q74B.

No38. P15, add 7 47P_0402 but "@" at every clock of PCI
No39. P12, change RTCVCC source from +VREG3_51125 instead of +3VL

No40. ESD change: (1) @: D63~D67, D14, D57, D32, D68, D33, D34, D36, D62,
No41. ESD change: (2) change P/N: D14, D57, D32, D68, D33, D34, D36, D62, D37
No42. ESD change: (3) affact layout: D14, D33, D34, D36, D62, D37
No43. modify C962 GND disconnection and R70 to GND
No44. modify HF part number, please search"change HF P/N" to know which parts changed.
No45. for Load BOM problems, change some parts as below:
(1) add CONN@: JCPU1, JP5
(2) add P/N for dual 2N7002: Q2,Q3,Q7,Q8,Q81
(3) change P/N: R570, C6, C829, R43, R44, R47

No46. for DRC check,
(1) P23, delete dummy net of JODD1 pin16, 17
(2) P28, add intersheet symbol at SMB_CLK_S3 and SMB_DATA_S3
(3) P21, add a TP at U18.7: LAN_CTRL_18
(4) P14, delete a dummy net N19910781
(5) P28, change JP32 pin DCAD net name to DCAD1

No47. for parts forbidden:
(1) C829 change to SE026104KN0 (2) R800 change to SD028100380
(3) D68 change to SCA00000E00 (4) C818 change to 0402 SE070104Z80

No48. EMI concern:
(1) install C833, C836, C956
(2) P25, JP25 pin difinition changes.
(3) R931 to 47 ohm
(4) P18, modify CRT circuits: add L and C, change R places, install C

No49. P29, for HP item 123, Change R680 to 100 ohms, and uninstall R699
No50. P29, delete R886, R887 and relative circuits
No51. P28, delete R892 for BATCON
No52. P23, change JODD1 pin16, 17 type to avoid from useless net names
No53. HF parts link database: D1

No54. HF parts link database:
(1) Q78 link SB00000H500
(2) D16, D63~D67 link SC2AN217020
(3) D1 link SC2N202U000
(4) D23~D29 did not link SC2P202U000, just revise manually
(5) Q57 & Q58 link SB000007H10
(6) C263 & C269 link SGA202211D0
(7) lots of 2N7002(Q4, Q23, Q32,Q41,Q42,Q43,Q45,Q46,48,49,50,51,
52,53,54,55,56,60,65,66,68,71,76,79,80) link SB000009080
(8) T63 link SP050002I10
(7) U42A, U42B, U44A, U57A link SA003930080

No55. combine power schematics 0212
No56. P29, for HP item 122, Connect D42-2 to VCORE_GP (not PM_PWROK)
TEST. change U42,U44,U57 value and footprint LM393DG_SO8

before netin
No57. change U42,U44,U57 link another SA003930080

2/16

No58. P5, for HP item 126, R60 and R61 should be NO INSTALL.
No59. P12, for HP item 127, Connect R857.1 to HDD_HALTLED_R instead of HDD_HALTLED
No60. P9,10, for HP item 128, Connect JDIMA1.199 and JDIMB1.199 to 3VS as Intel reference board
No61. P16, for HP item 131, Based on spec, VccTX_LVDS and VCCA_LVD to GND.
No62. P19, for HP item 136, Install Q76 and no install R1055 as there must be isolation
No63. P13, for HP item 138, Change Gate of Q77 to +3VALW

No64. change Pb-free
(1)R1058 to SD028100180,
(2)R1059,1060,1062,1063,1064 to SD028100280
(3)R615, 1061 to SD028470180
(4)RP31, RP33 to SD309100280
(5)RP29, 30, 32,34,35 to SD309470180 --> footprint should keep original
(5)C953 to SE053475Z80
(6)C950, 951, 952 to SE070104Z80
change HF
(1) SW1 to SN100000W10

No65. separate GND signals
(1) P28 and P25, add GNDA and resistors,

No66. P20, change JEDP1 to 24 pin connector, delete LANE[1:3] and EDID, as well as U4 relative signals.
No67. P31, change SPI ROM back to DB1 design, but mount 8pin, unmount 16pin
No68. P19, change misunderstand name:DPD_C_AUX/DPD_C_AUX# to DPD_C_AUX_L/DPD_C_AUX_L#

2/19

No69. P5, delete MB_DP_DATA[1:3]_N/P for JEDP pin cutting
No70. C6 and C685 change to SE071100J80 because of Jason's request(vendor doesn't have the original 25V part)
No71. P25, install C888,C889

2/20

No72. for HP item 66, P29, U66.5 should be connected to 3VL so that KBC can read board before boot and apply necessary fixes.
No73. for HP item 103, P31, R1035 should be 0ohm
No74. P27, change SC_PWR circuits for unsurely current

2/23
No74. P26, uninstall U31 and add J1 for cost down
No75. change some test point footprint to TPC12: T61,T62,T1,T55,T97,T22, and P14 lots of points

2/24
No76. P22, JP6 symbol error, modified!
No77. P12, add a net name XDP_FN4

2/25
No78. P32, change U44.8 to +5VALW for HP request
No79. P29, change R680=220 ohms

combine power schematics

No80. P25,
(1) JP24: redefine the singals of the pins,
(2) JP25: reverse pin definition

No81.
(1)U4 change PN to SA00002KV30 for ES2
(2)P31, &U1, &U2 change to SA000037A00

3/6

No82.
(1)P29, Firmwave said unmount R1021 and mount R1022
(2)P4, delete R998 <BOM structure>, otherwise BOM will be error

Security Classification	Compal Secret Data		
Issued Date	2008/03/13	Deciphered Date	2009/05/11

THIS SHEET OF ENGINEERING DRAWING IS THE PROPRIETARY PROPERTY OF COMPAL ELECTRONICS, INC. AND CONTAINS CONFIDENTIAL AND TRADE SECRET INFORMATION. THIS SHEET MAY NOT BE TRANSFERED FROM THE CUSTODY OF THE COMPETENT DIVISION OF R&D DEPARTMENT EXCEPT AS AUTHORIZED BY COMPAL ELECTRONICS, INC. NEITHER THIS SHEET NOR THE INFORMATION IT CONTAINS MAY BE USED BY OR DISCLOSED TO ANY THIRD PARTY WITHOUT PRIOR WRITTEN CONSENT OF COMPAL ELECTRONICS, INC.

Compal Electronics, Inc.

Title: **Hardware revision -DB2**

Size	Document Number	Rev
C	LA-4902P	0.3

Date: Wednesday, December 09, 2009 | Sheet 45 of 47

hexainf@hotmail.com

3/9
No1. for HP item 5, P32, change U44A to U57B and delete U44
No2. for HP item 6, P12&24, connect JP12.17 to U4A.F34 and add 10K pull-up to +3VS for Braidwood detection.
No3. for HP item 7, P4, changed PCH debug ports to CFG4 - pin 28, CFG5 - pin 30, CFG10 - pin 22, and CFG11 pin 24
No4. for HP item 11, P20, reverse Q9A
No5. for HP item 12, P13, Change all express clock series terminations from 33ohm to 0ohm, R208, R209, R211, R212, R41 and R59 should be 0ohm
No6. for HP item 13, P14, uninstall R337, R820, R821 to disable iVDS (DC1.0 did not say this)
No7. for HP item 14, P12, unmount R186 and R192 because latest PCH EDS shows that PCH XDP JTAG_RST# is now NO CONNECT on PCH
No8. for HP item 16, P20, Change D12 to 2Kohm resistor and remove R322
No9. for HP item 17, P20, Change Q79.2 to LID_SW#
No10. for HP item 18, P24, change WWAN power circuits to pFET circuits.
No11. for HP item 22, P27, add ESD Diodes and pullups for the SCCLK, SCIO, SCRST lines on the SC socket

3/16
No12. P14, add RGB name:DAC_RED_R,DAC_GRN_R,DAC_BLU_R

3/19
No13. P29, R593 part number: "space" delete

3/27
No14. P31, reverse JP30 pin definition
No15. P4, change R1082 from 0 ohm to 10K
No16. P14, P18, change R307,R308,R309,R301,R302,R303 from 75ohm to 150ohm
No17. for HP item 4, P22, Source and Drain on Q80B should be swapped
No18. P28, add a reversing circuit for STB_LED# to fix the LED bug
No19. P21,P28, delete redundant net LAN_ACT#_DOCK and change it to LAN_ACT#

4/2
No20. P31, revise BIOS connector to CONN@ and unmount &U1
No21. P9, reivse " M1@" to "M1@"
No22. P12, revise 0ohm(R868,R869,R870,R871,R872,R1071) from SD034000080 to SD028000080

4/3
No23. P25, modify Power button curcuits

4/10
No24. for HP item, P15 and 24, GPIO -->WWAN_DET# and pull high 100K
No25. for HP item, P4, Stuff R51 for SYS_SHDN# for SI-1 final.
No26. for HP item, P22, VCT pin U18.6 hould be NO CONNECT. R929 uninstall
No27. for HP item, P9&10, Remove M1@ for UMA and make it always installed. UMA will only use M1
No28. for HP item, P31, reserve 100Kohm pull up to 3VL on U6311
No29. for HP item, P15, LAN_DIS# should pull up to +3VM_LAN instead of 3VALW
No30. for HP item, P4, Change R14/R15 to 1.1K1%/3K1% per DG1.52
No31. for HP item, P15, Add NO INSTALL 0ohm to GND on GPIO8 on PCH and remove PULL UP to 3VLAW because PCH has an integrated pull up.
No32. for HP item, P13, For UMA:
NO INSTALL: R210, Y4, C222
INSTALL 0ohm resistor in C223

4/14
No33. P14, revise for HP item 13 not mentioned, delete LVD_VREFH and LVD_VREFL to GND
No34. for HP item, P19, Reserve 0.1uF on DDC_EN and DP_EN for concern about noise.

4/21
No35. P29,
R1021 Removed
R1022 Install (main battery selection)
R1023 Install (OCP function)
R1024 Install (travel battery selection)
R694 Install (SMSC CBB will required it)

4/22
power schematics updated: CARTIER_UMA_PWR_20090421.DSN
No36. P7, power team delete PC713~PC715, and add these 3 to my schematics as C972~974
No37. for HP item, P16, Add 2x22uF for VCCME (on PCH)

4/22
No38. revise the footprints of T113, 122, 123, 124 from TPC to TPC12
No6. for HP item 13, P14, delete R337, R820 and R821, and add 3 test points.
No39. for HP item, P4, install R997 and uninstall R44 to change FAN power

4/27
No18. revised for HP item, P28, change name STB_LED#_R
No40. P31, delete U64 and &U1
No10. for HP item 18 and 57, P24, modify WWAN circuits
No41. for HP item 50, P12, delete CLRP2
No42. for HP item 51, P29, change system ID by installing R660 and uninstalling the others
No43. for HP item 55, P30, add uninstalled 0ohm and 10K pull down at SER_SHD
No44. for HP item 46, P9,10, Install a new voltage divider for VREF_CA that is different from VREF_DQ divider
No45. for HP item 61, P15,20, delete R969, R330 R328, C297 R327 R329 Q14 C304 and Q9A, R268, delete WEBCAM_OFF circuits and add WEBCAM_ON circuits.
No46. P33, add +VCCP and +GFX_CORE discharge circuits

4/28
No47. P27, change Smart Card circuits
No48. for HP item 48, P9,10,
(1) add 1 uninstalled 300uF on DIMMB +1.5V,
(2) add 2 10uF on +0.75VS,
(3) delete 4 uninstalled 10uF on +1.5V
(4) unistall 8 0.1uF on +1.5V

No49. for HP item 49, P16, delete R289
No50. for HP item 52, P22, TRM_CRT: add 4 0.1uF
No51. for HP item 56, P24, change caps to 150uF and 22uF, delete the others.
No52. for HP item 60, P25, simplify WLAN/WWAN/BT LED circuits. uninstall Q62 and Q64
No45. for HP item 61, P20, modify WEBCAM again

4/30
power schematics updated: CARTIER_UMA_PWR_20090429.DSN

5/4
No53. for HP item 62, P25 & 29,
Change A_SD to A_SD# on U40.91U (GPIO14 of KBC).
Change A_SD to A_SD# on JP5.35 (Audio board connector).
Change EAPD to MUTE_LED_CNTL on U40.100U (GPIO31 of KBC).
Change EAPD to MUTE_LED_CNTL on JP5.36 (Audio board connector).

No54. for HP item 64, P23, uninstall R474. The concern is leakage when system is off.
No55. for HP item 65, P29, Uninstall pull-up on KBRST# (R893) as it is not needed.
No56. for HP item 66, P29, Change R700 on PM_RSMRST# from 10K to 100K to reduce current.
No57. for HP item 67, P29, for ADC small input filters. add R1113~R1116 and C982~C984
No58. for HP item 69, P14, uninstall R234 for wrong power rail
No59. for HP item 70, P15, add 10K pull-up to USB_OC#2 as we are not using it.
No60. for HP item 71, P12&24, change net name from BRAID_DET to NAND_DET#
No61. for HP item 72, P13&21, add CLK_PCIE_LAN_REQ1# connected U18.48 to U4B.U4
No62. P23, change JODD1, link database

5/5
No62. P23, JODD1 pin 16,17 change passive

5/6
No63. P22, swap T63 MDI +/- signals
No64. for HP item 15, P33, add 330uF to each of +1.05VS and +1.05VM
No63. P22, swap again
No64. for HP item 15, P33, change 330uF to smaller package because of lack of space, and delete C782, C894

5/7
power schematics updated: CARTIER_UMA_PWR_20090507.DSN
No65. P8, power team requests 10uF*22 and 22uF*18
No66. P29, according to SMSC AN 18 1 rev 0 12:
(1) add capacitors on PS2 signals
(2) reserve ESD diodes on cap_clk and cap_data

No67. P15, EMI concern: change R1026 to 47 ohm

5/7
No68. for HP item 68, P29, change net name :AC_AND CHG --> AC_ADP_PRES

5/8
No69. for HP item 74, P33, uninstall R775 and Q56
No70. for HP item 73, P29, uninstall D42

power schematics updated: CARTIER_UMA_PWR_20090508.DSN
No71. P20, JEDP.20 change to +5VS

5/12
No72. P26, add eSATA connector and redriver curcuits
No73. P19, correct Q75B's direction

5/13
No74. P29, cost down, change NOR to dual 2N7002
No75. P26, cost down, delete R605, and short the circuits
No76. P23, from Johnson, we should keep the pull high resistor because EC will not program the internal pull-high afterwards.

power schematics updated: CARTIER_UMA_PWR_20090513.DSN

5/14
No72. P26, change USB and E-SATA connector and revise this circuit
power schematics updated: CARTIER_UMA_PWR_20090514.DSN
No77. for HP item 75, P24, install C545~C547 39pF
No78. P21, c495, c497 CHANGE TO X5R SE095104K80

5/15
No79. P7, delete uninstalled VCCP 47pF * 4 and 10uF * 1(C41~C44, C46)
power schematics updated: CARTIER_UMA_PWR_20090515.DSN
No80. P33, Q61 change part

5/18
No81. for HP item 22, P27, install D70~72
No82. for HP item 76, P14, 29, 41
(1) add R=1k between PGD_IN and VGATE, and uninstall R237.
(2) remove D42.
(3) remove PR217 and PR230

No83. for HP item 77, P19, uninstall R1076
No84. for HP item 78, P19,
Remove R1051 and R1048 and make the following changes:
Install R1046 (100K) but change R1046.2 to GND
Install R1047 (100K) but change R1047.1 to 3VS

power schematics updated: CARTIER_UMA_PWR_20090518.DSN
No85. P21, change 10uF to 22uF to stablize voltage

5/19
No86. change HF part:
(1) SA411250130 S IC 74AHCT1G125GW SOT353 5P BUS BUFFER
-> SA00000RY00: U7, U8, (PN change only)
(2) SB000008E00 S TR MMBT3904W NPN SOT323-3
->SB000008E10: Q1,
(3) SB00000AR00 S TR 2N7002DW T/R7 2N SOT-363-6
-> SB00000AR10: Q2, Q3, Q5, Q7, Q8, Q10, Q63, Q77, Q86, Q87
(4) SB570025280 S TR 2N7002DW-7-F 2N SOT-363
-> SB00000EO10: Q11, Q72, Q73, Q74, Q75, Q81
(5) SC2N202U000 S DIO ROW DAN202UGT106 3P C/C SC-70
-> SC600000B00: D1
(6) SCA00000A00 S ZEN ROW PJDLC05 3P C/A SOT23
-> SCA00000A10: D58
(7) SJ100001V00 S CRYSTAL 32.768KHZ 1TJS125DJ4A420P
-> SJ100004N00: Y6, Y7
(8) SP04301P120 S FUSE SMD1812P110TF 1.1A 6V UL/CSA/TUV
-> SP04301P140: F1
(9) SC1N4148180 S DIO 1N4148WS-7-F SOD-323
-> SC100004P00: D60, D70, D71, D72 (PN change only)

No87. after Gerber out: BOM
(1) change Q70 to SB923050020
(2) link database:
JP31(enter myself), C888, R782, R202, R200, R791,
R785, R800, R796, R797, C184, C885, C887, C231,
C232, C236, C241, C243, C244, C247, C248, C251,
C252, C253, C261, C264, C270, C271, C272, C274,
C275, C515, RP16, RP18, RP26, RP27, R787

No88. according to Monji, P13, check R215 to 22 ohm

5/20
No89. U67: Change SA00002ZR0L to SA00002ZR00
for DELL prohibition part

No90. P08,
change MLCC part references for power
team request

(1) 10uF: C103、C993、C994、C988、C92
C94、C97、C116、C113、C90
C89、C98、C99、C100、C101
C102、C91、C84、C96、C83
C111、C88
(2) 22uF: the others
(3) change C105 ~ C108 to SGA00001Q80

SI1 to SI2

5/20
No1. change schematics parts of Q24 and Q70, the same P/N SB923050020

5/25
No2. P27, change R1086 to 100K, R1085 to 10K, delete R1110 like DIS
No3. PCH PN: SA00002KV60; LAN PN: SA00002MO40

Security Classification	Compal Secret Data		
Issued Date	2008/03/13	Deciphered Date	2009/05/11

THIS SHEET OF ENGINEERING DRAWING IS THE PROPRIETARY PROPERTY OF COMPAL ELECTRONICS, INC. AND CONTAINS CONFIDENTIAL AND TRADE SECRET INFORMATION. THIS SHEET MAY NOT BE TRANSFERED FROM THE CUSTODY OF THE COMPETENT DIVISION OF R&D DEPARTMENT EXCEPT AS AUTHORIZED BY COMPAL ELECTRONICS, INC. NEITHER THIS SHEET NOR THE INFORMATION IT CONTAINS MAY BE USED BY OR DISCLOSED TO ANY THIRD PARTY WITHOUT PRIOR WRITTEN CONSENT OF COMPAL ELECTRONICS, INC.

Compal Electronics, Inc.

Title: **Hardware revision -SI**

Size	Document Number	Rev
C	LA-4902P	0.3

Date: Wednesday, December 09, 2009 | Sheet 46 of 47

5/20
No1. change schematics parts of Q24 and Q70, the same P/N SB923050020

5/25
No2. P27, change R1086 to 100K, R1085 to 10K, delete R1110 like DIS
No3. PCH PN: SA00002KV60; LAN PN: SA00002MO40

6/2
No4. P12, change reference name: JBATT1 --> JBAT1
No5. P25 & P31, JP25 and JP30 are reversed(H and V) because of footprint silkscreen problem,
remember not to change routing, just change ME pin1

No6. P12, P29, P31, add net names of SPI signals
No7. P12,29,31, change 24.9ohm for SMSC reqest:R939,R940,R950,R948,R952,R1035

6/18
No8. P19, add 1 fuse on DP power

6/22

No9. P19, as per Johnson's request, for cost down
(1) uninstall C123, C699
(2) change C552 from 150uF to 100uF +0.1uF*2 (not ok)
(3) change C263 and C269 to 100uF (not ok)

Security Classification	Compal Secret Data		
Issued Date	2008/03/13	Deciphered Date	2009/05/11

THIS SHEET OF ENGINEERING DRAWING IS THE PROPRIETARY PROPERTY OF COMPAL ELECTRONICS, INC. AND CONTAINS CONFIDENTIAL AND TRADE SECRET INFORMATION. THIS SHEET MAY NOT BE TRANSFERED FROM THE CUSTODY OF THE COMPETENT DIVISION OF R&D DEPARTMENT EXCEPT AS AUTHORIZED BY COMPAL ELECTRONICS, INC. NEITHER THIS SHEET NOR THE INFORMATION IT CONTAINS MAY BE USED BY OR DISCLOSED TO ANY THIRD PARTY WITHOUT PRIOR WRITTEN CONSENT OF COMPAL ELECTRONICS, INC.

Compal Electronics, Inc.

Title: **Hardware revision -SI2**

Size	Document Number	Rev
C	LA-4902P	0.3

Date: Wednesday, December 09, 2009 | Sheet 47 of 47

hexainf@hotmail.com