Compal Confidential

DAT20 Schematics Document

Banias uFCPGA Package with 855PM(Odem) + ICH4-M

2003-09-25

REV: 0.3

THIS SHEET OF ENGINEERING DRAWING IS THE PROPRIETARY PROPERTY OF COMPAL ELECTRONICS, INC. AND CONTAINS CONFIDENTIAL AND TRADE SECRET INFORMATION. THIS SHEET MAY NOT BE TRANSFERED FROM THE CUSTODY OF THE COMPETENT DIVISION OF R&D DEPARTMENT EXCEPT AS AUTHORIZED BY COMPAL ELECTRONICS, INC. NEITHER THIS SHEET NOR THE INFORMATION IT CONTAINS MAY BE USED BY OR DISCLOSED TO ANY THIRD PARTY WITHOUT PRIOR WRITTEN CONSENT OF COMPAL ELECTRONICS, INC.

Compal Electronics, Inc.		
Title: Cover Sheet		
Size: Custom	Document Number: DAT20 LA-1971	Rev: 0.3
Date: Friday, September 26, 2003	Sheet 1 of 42	

Compal confidential
Model Name : DAT20
File Name : LA-1971 Rev:0.3
Part Number : DA8AT20L000

Block Diagram

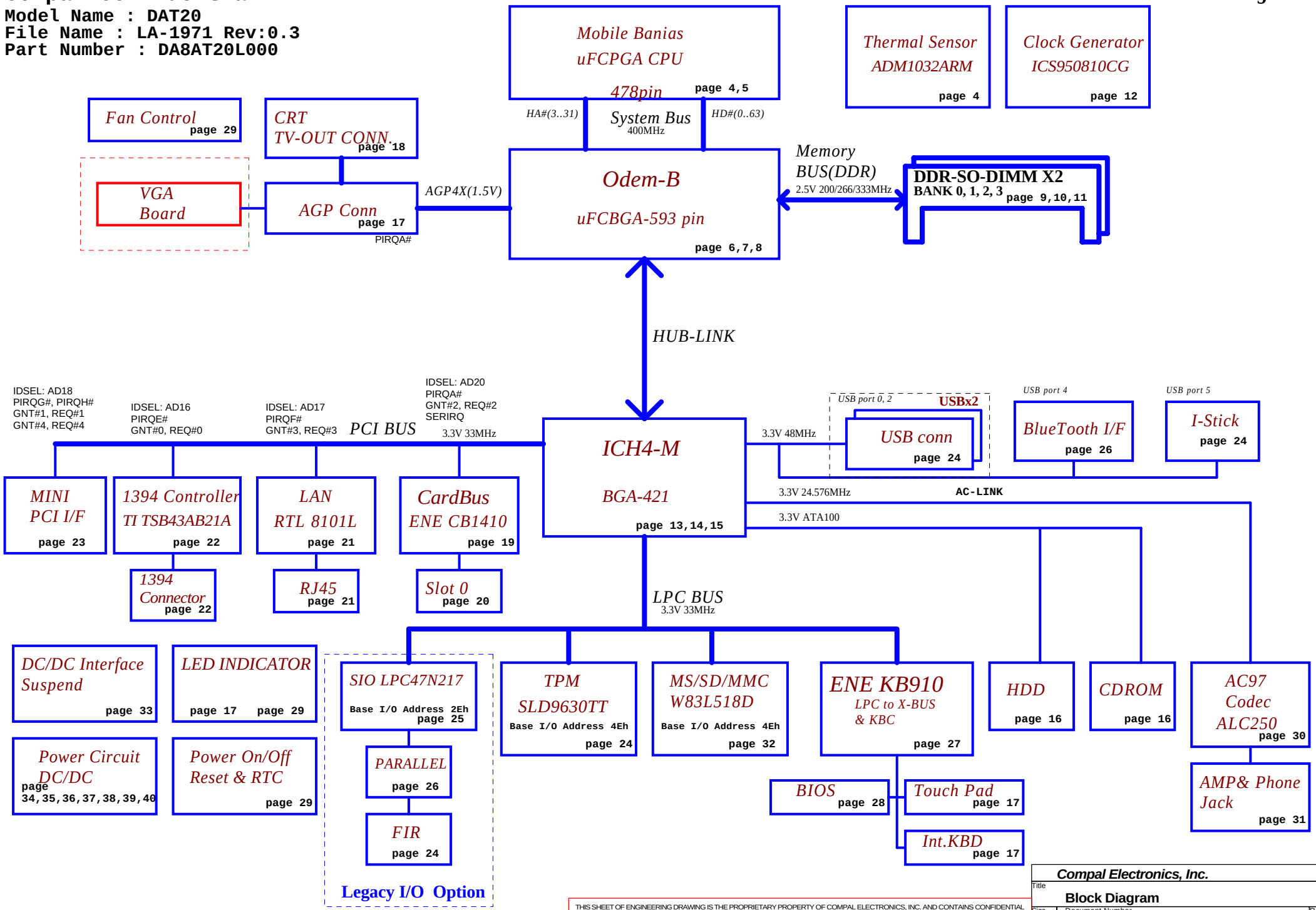

THIS SHEET OF ENGINEERING DRAWING IS THE PROPRIETARY PROPERTY OF COMPAL ELECTRONICS, INC. AND CONTAINS CONFIDENTIAL AND TRADE SECRET INFORMATION. THIS SHEET MAY NOT BE TRANSFERED FROM THE CUSTODY OF THE COMPETENT DIVISION OF R&D DEPARTMENT EXCEPT AS AUTHORIZED BY COMPAL ELECTRONICS, INC. NEITHER THIS SHEET NOR THE INFORMATION IT CONTAINS MAY BE USED BY OR DISCLOSED TO ANY THIRD PARTY WITHOUT PRIOR WRITTEN CONSENT OF COMPAL ELECTRONICS, INC.

Compal Electronics, Inc.			
Title: Block Diagram			
Size: Custom	Document Number: DAT20 LA-1971		Rev: 0.3
Date: Friday, September 26, 2003	Sheet 2 of 42		

Voltage Rails

Power Plane	Description	S0-S1	S3	S5
VIN	Adapter power supply (19V)	N/A	N/A	N/A
B+	AC or battery power rail for power circuit.	N/A	N/A	N/A
+CPU_CORE	Core voltage for CPU	ON	OFF	OFF
+VCCP	1.05V rail for Processor I/O	ON	OFF	OFF
+1.2VS	1.2VS switched power rail for MCH	ON	OFF	OFF
+1.25VS	1.25V switched power rail	ON	OFF	OFF
+1.5VALW	1.5V power rail	ON	ON	ON
+1.5VS	AGP 4X	ON	OFF	OFF
+1.8VS	1.8V switched power rail	ON	OFF	OFF
+2.5V	2.5V power rail	ON	ON	OFF
+2.5VS	2.5V switched power rail	ON	OFF	OFF
+3VALW	3.3V always on power rail	ON	ON	ON*
+3V	3.3V power rail	ON	ON	OFF
+3VS	3.3V switched power rail	ON	OFF	OFF
+5VALW	5V always on power rail	ON	ON	ON*
+5V	5V power rail	ON	ON	OFF
+5VS	5V switched power rail	ON	OFF	OFF
+12VALW	12V always on power rail	ON	ON	ON*
+RTCVCC	RTC power	ON	ON	ON

Note : ON* means that this power plane is ON only with AC power available, otherwise it is OFF.

Board ID Table for AD channel

Vcc	3.3V +/- 5%
Ra	100K +/- 5%

Board ID	Rb	V_{AD_BID} min	V_{AD_BID} typ	V_{AD_BID} max
0	0	0 V	0 V	0 V
1	8.2K +/- 5%	0.216 V	0.250 V	0.289 V
2	18K +/- 5%	0.436 V	0.503 V	0.538 V
3	33K +/- 5%	0.712 V	0.819 V	0.875 V
4	56K +/- 5%	1.036 V	1.185 V	1.264 V
5	100K +/- 5%	1.453 V	1.650 V	1.759 V
6	200K +/- 5%	1.935 V	2.200 V	2.341 V
7	NC	2.500 V	3.300 V	3.300 V

Board ID	PCB Revision
0	0.1
* 1	0.2
2	0.3
3	0.4
4	
5	
6	
7	

External PCI Devices

Device	IDSEL#	REQ#/GNT#	Interrupts
VGA			PIRQA
CardBus	AD20	2	PIRQA
LAN	AD17	3	PIRQF
Mini-PCI	AD18,AD22	1/4	PIRQG/PIRQH
1394	AD16	0	PIRQE

EC SM Bus1 address

Device	Address
Smart Battery	0001 011X b
EEPROM(24C16/02)	1010 000X b
(24C04)	1011 000Xb

EC SM Bus2 address

Device	Address
ADM1032	1001 110X b

ICH4-M SM Bus address

Device	Address
Clock Generator (ICS950810CG)	1101 001Xb
DDR DIMM0	1010 000Xb
DDR DIMM1	1010 001Xb

THIS SHEET OF ENGINEERING DRAWING IS THE PROPRIETARY PROPERTY OF COMPAL ELECTRONICS, INC. AND CONTAINS CONFIDENTIAL AND TRADE SECRET INFORMATION. THIS SHEET MAY NOT BE TRANSFERED FROM THE CUSTODY OF THE COMPETENT DIVISION OF R&D DEPARTMENT EXCEPT AS AUTHORIZED BY COMPAL ELECTRONICS, INC. NEITHER THIS SHEET NOR THE INFORMATION IT CONTAINS MAY BE USED BY OR DISCLOSED TO ANY THIRD PARTY WITHOUT PRIOR WRITTEN CONSENT OF COMPAL ELECTRONICS, INC.

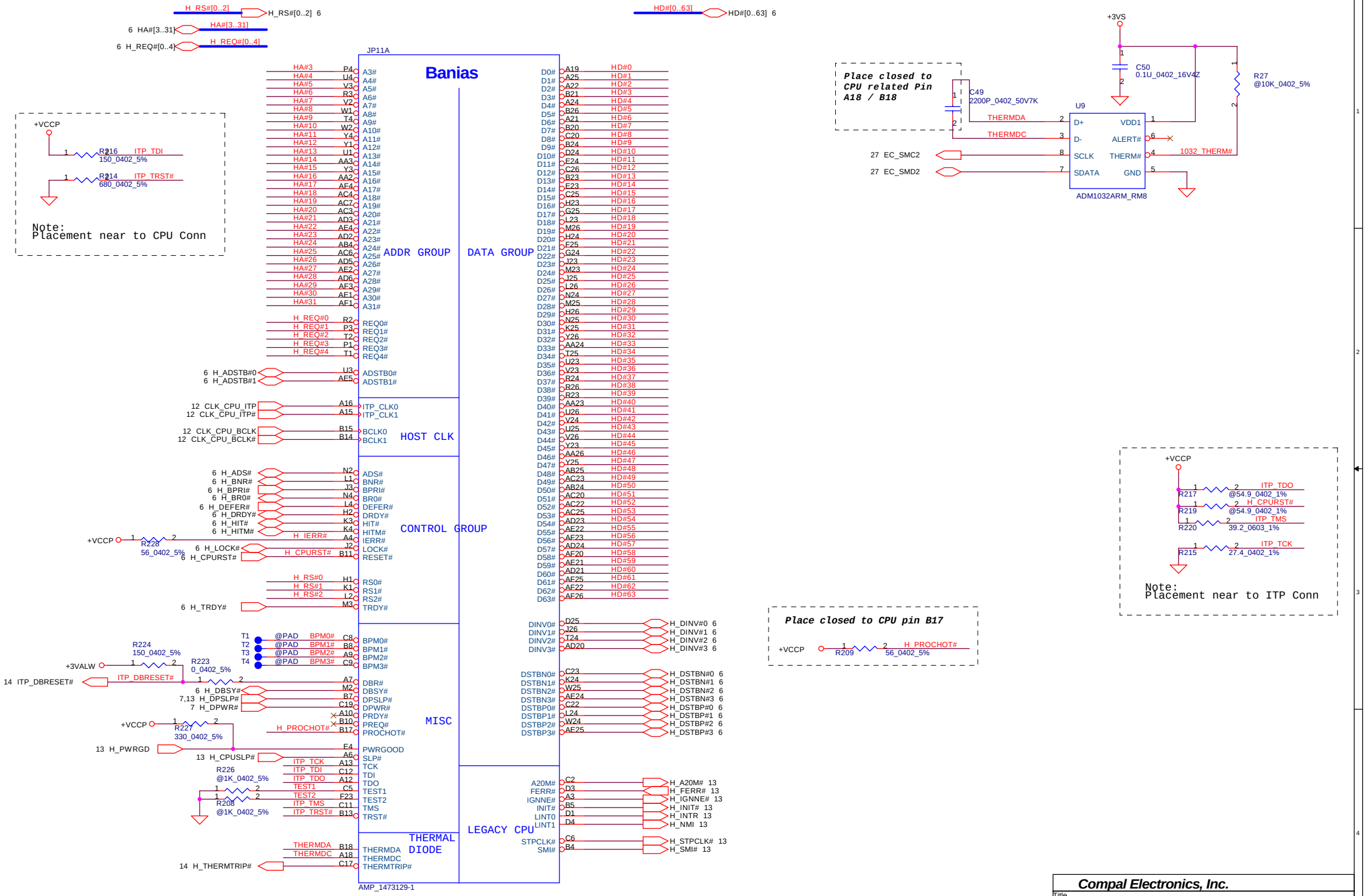

THIS SHEET OF ENGINEERING DRAWING IS THE PROPRIETARY PROPERTY OF COMPAL ELECTRONICS, INC. AND CONTAINS CONFIDENTIAL AND TRADE SECRET INFORMATION. THIS SHEET MAY NOT BE TRANSFERED FROM THE CUSTODY OF THE COMPETENT DIVISION OF R&D DEPARTMENT EXCEPT AS AUTHORIZED BY COMPAL ELECTRONICS, INC. NEITHER THIS SHEET NOR THE INFORMATION IT CONTAINS MAY BE USED BY OR DISCLOSED TO ANY THIRD PARTY WITHOUT PRIOR WRITTEN CONSENT OF COMPAL ELECTRONICS, INC.

Compal Electronics, Inc.

Title: **Banias Processor in mFCPGA479 (1/2)**

Size: Custom | Document Number: **DAT20 LA-1971** | Rev: 0.3

Date: Friday, September 26, 2003 | Sheet 4 of 42

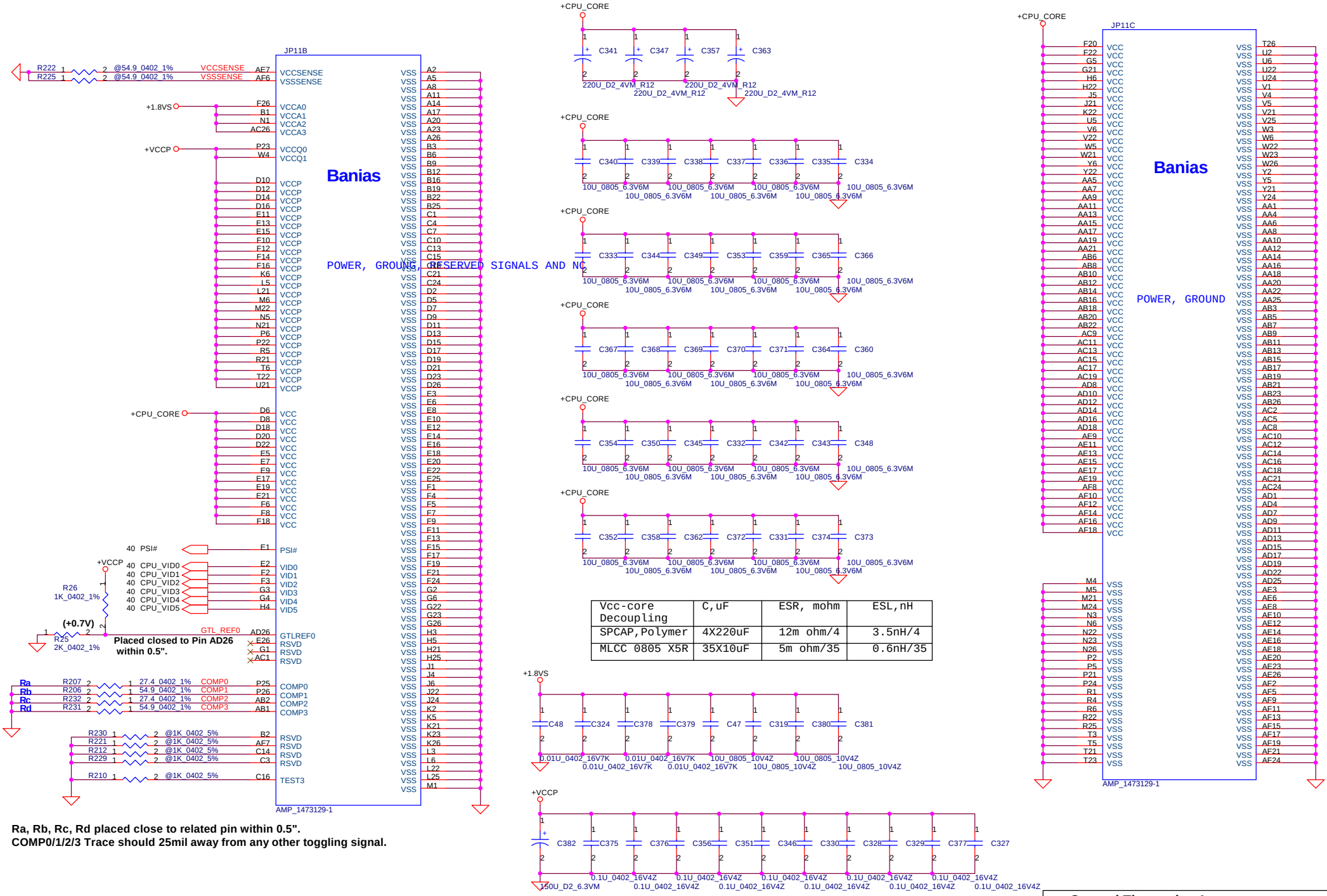

Vcc-core Decoupling	C,uF	ESR, mohm	ESL,nH
SPCAP,Polymer	4X220uF	12m ohm/4	3.5nH/4
MLCC 0805 X5R	35X10uF	5m ohm/35	0.6nH/35

Ra, Rb, Rc, Rd placed close to related pin within 0.5".
COMP0/1/2/3 Trace should 25mil away from any other toggling signal.

THIS SHEET OF ENGINEERING DRAWING IS THE PROPRIETARY PROPERTY OF COMPAL ELECTRONICS, INC. AND CONTAINS CONFIDENTIAL AND TRADE SECRET INFORMATION. THIS SHEET MAY NOT BE TRANSFERED FROM THE CUSTODY OF THE COMPETENT DIVISION OF R&D DEPARTMENT EXCEPT AS AUTHORIZED BY COMPAL ELECTRONICS, INC. NEITHER THIS SHEET NOR THE INFORMATION IT CONTAINS MAY BE USED BY OR DISCLOSED TO ANY THIRD PARTY WITHOUT PRIOR WRITTEN CONSENT OF COMPAL ELECTRONICS, INC.

Compal Electronics, Inc.

Title: **Banias Processor in mFCPGA479 (2/2)**

Size: Custom | Document Number: **DAT20 LA-1971** | Rev: 0.3

Date: Friday, September 26, 2003 | Sheet 5 of 42

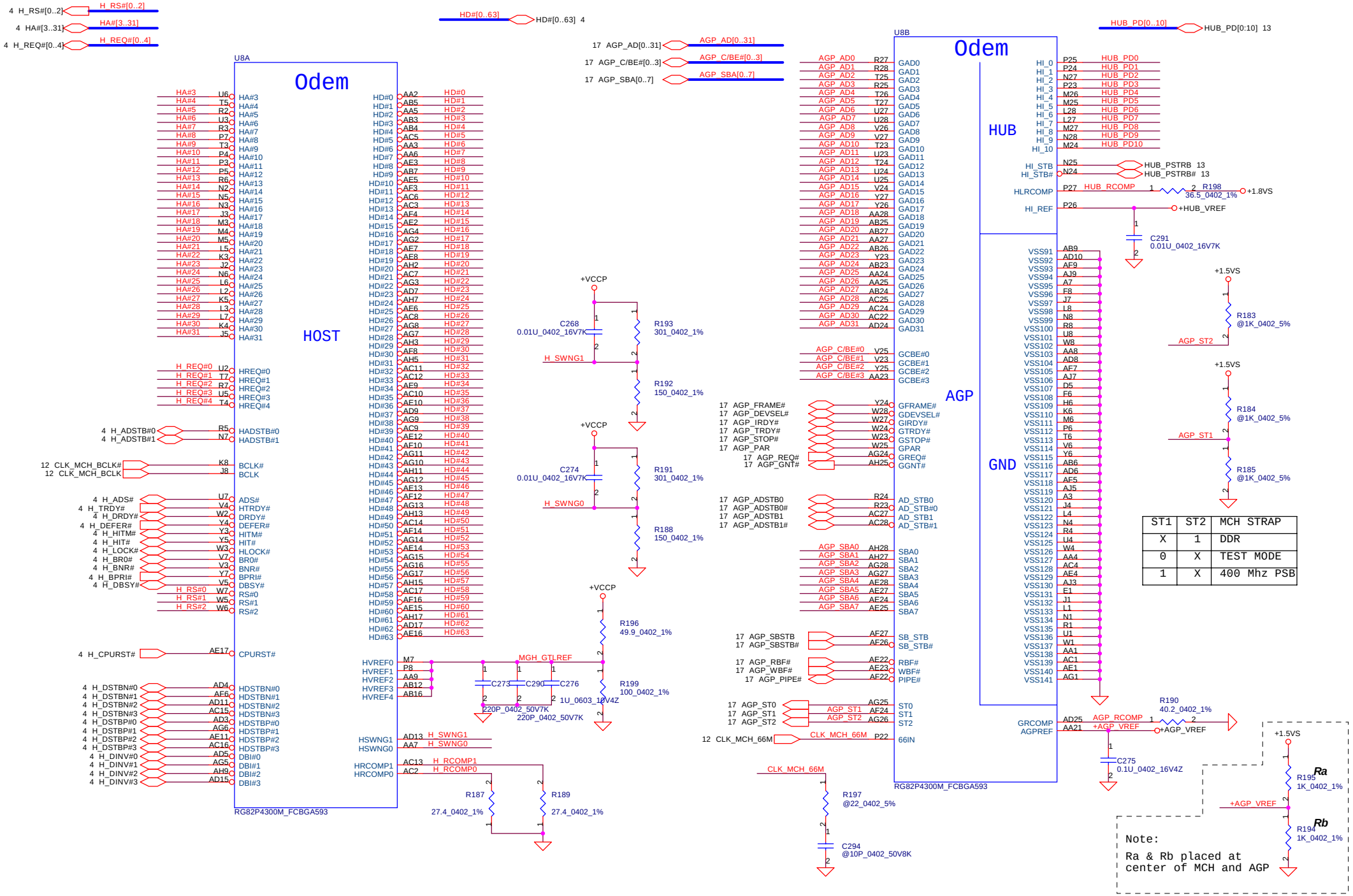

ST1	ST2	MCH STRAP
X	1	DDR
0	X	TEST MODE
1	X	400 Mhz PSB

THIS SHEET OF ENGINEERING DRAWING IS THE PROPRIETARY PROPERTY OF COMPAL ELECTRONICS, INC. AND CONTAINS CONFIDENTIAL AND TRADE SECRET INFORMATION. THIS SHEET MAY NOT BE TRANSFERED FROM THE CUSTODY OF THE COMPETENT DIVISION OF R&D DEPARTMENT EXCEPT AS AUTHORIZED BY COMPAL ELECTRONICS, INC. NEITHER THIS SHEET NOR THE INFORMATION IT CONTAINS MAY BE USED BY OR DISCLOSED TO ANY THIRD PARTY WITHOUT PRIOR WRITTEN CONSENT OF COMPAL ELECTRONICS, INC.

Compal Electronics, Inc.

Title: **Odem (1/3)**

Size: Custom | Document Number: **DAT20 LA-1971** | Rev: 0.3

Date: Friday, September 26, 2003 | Sheet 6 of 42

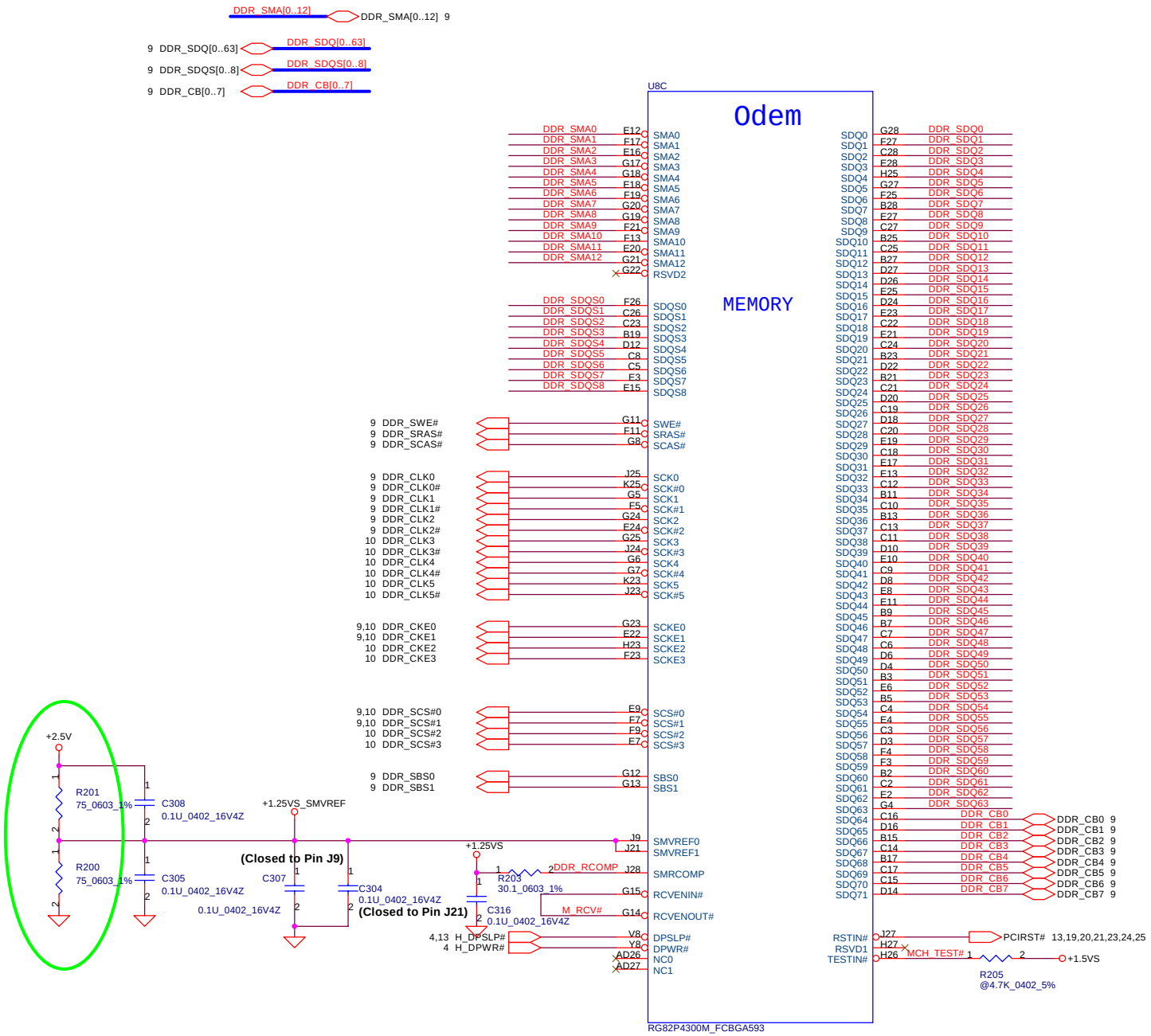

THIS SHEET OF ENGINEERING DRAWING IS THE PROPRIETARY PROPERTY OF COMPAL ELECTRONICS, INC. AND CONTAINS CONFIDENTIAL AND TRADE SECRET INFORMATION. THIS SHEET MAY NOT BE TRANSFERED FROM THE CUSTODY OF THE COMPETENT DIVISION OF R&D DEPARTMENT EXCEPT AS AUTHORIZED BY COMPAL ELECTRONICS, INC. NEITHER THIS SHEET NOR THE INFORMATION IT CONTAINS MAY BE USED BY OR DISCLOSED TO ANY THIRD PARTY WITHOUT PRIOR WRITTEN CONSENT OF COMPAL ELECTRONICS, INC.

Compal Electronics, Inc.

Title: **Odem (2/3)**

Size: Custom | Document Number: **DAT20 LA-1971** | Rev: 0.3

Date: Friday, September 26, 2003 | Sheet 7 of 42

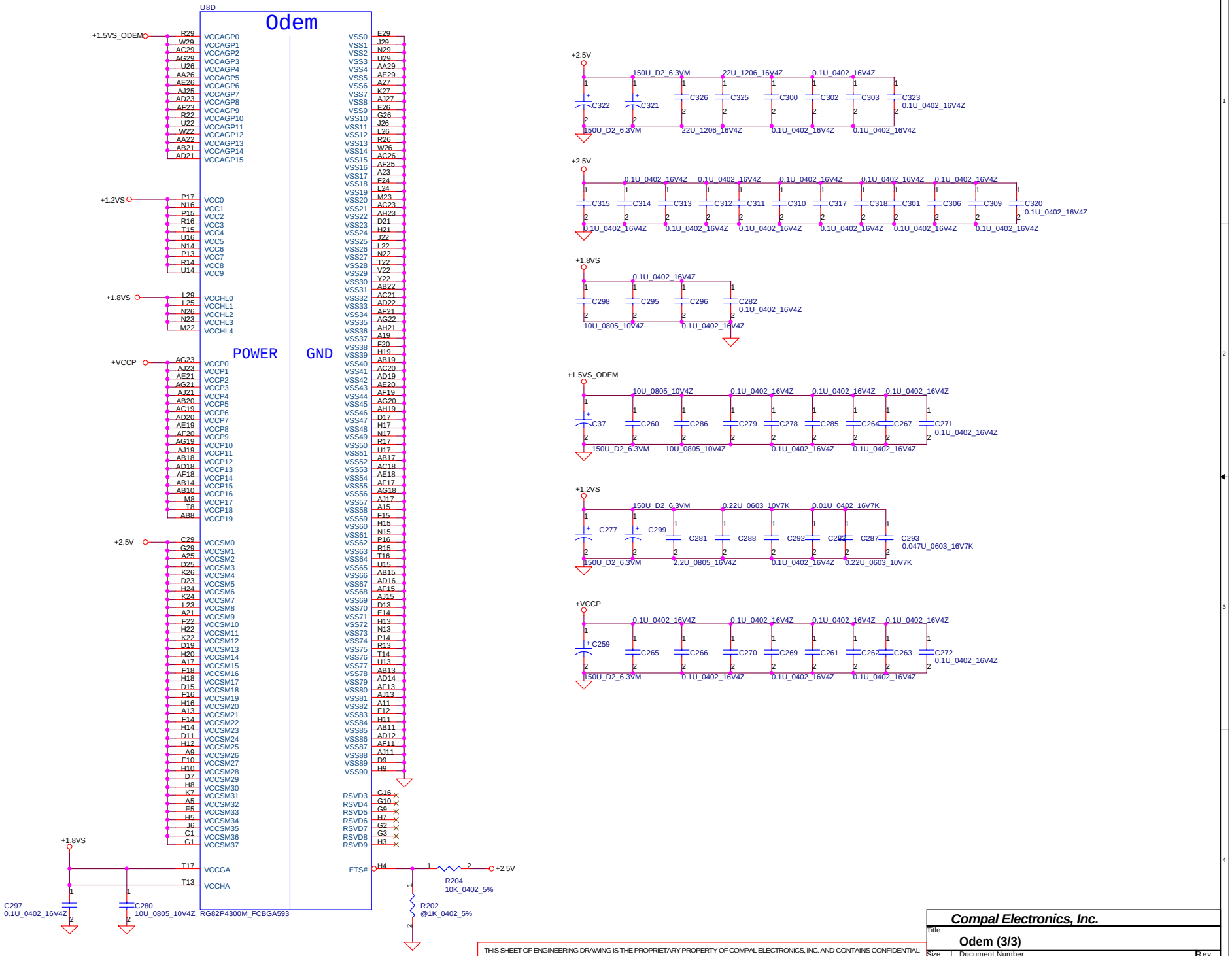

THIS SHEET OF ENGINEERING DRAWING IS THE PROPRIETARY PROPERTY OF COMPAL ELECTRONICS, INC. AND CONTAINS CONFIDENTIAL AND TRADE SECRET INFORMATION. THIS SHEET MAY NOT BE TRANSFERED FROM THE CUSTODY OF THE COMPETENT DIVISION OF R&D DEPARTMENT EXCEPT AS AUTHORIZED BY COMPAL ELECTRONICS, INC. NEITHER THIS SHEET NOR THE INFORMATION IT CONTAINS MAY BE USED BY OR DISCLOSED TO ANY THIRD PARTY WITHOUT PRIOR WRITTEN CONSENT OF COMPAL ELECTRONICS, INC.

Compal Electronics, Inc.	
Title: Odem (3/3)	
Size: Custom	Document Number: DAT20 LA-1971
Rev: 0.3	
Date: Friday, September 26, 2003	Sheet 8 of 42

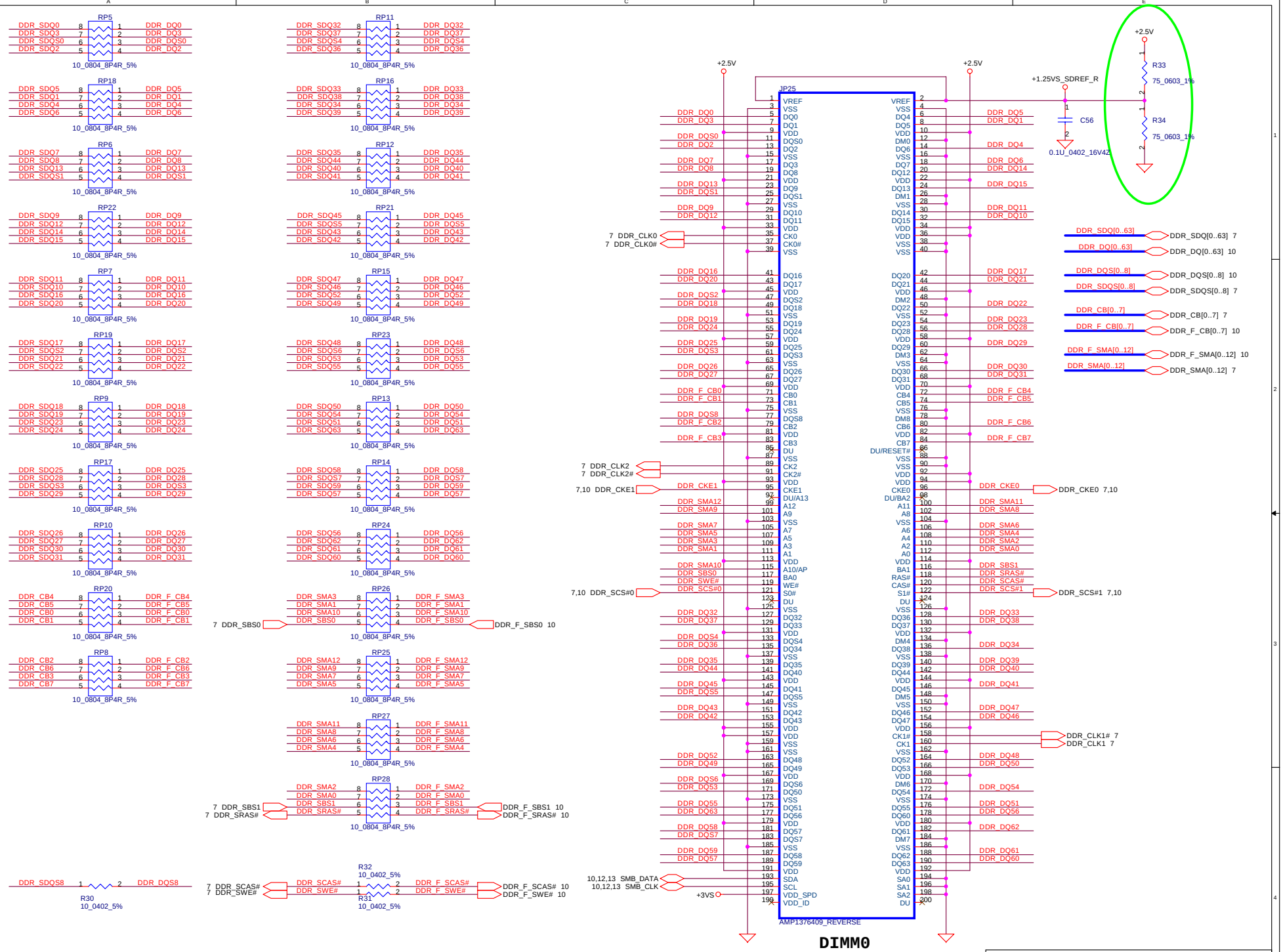

THIS SHEET OF ENGINEERING DRAWING IS THE PROPRIETARY PROPERTY OF COMPAL ELECTRONICS, INC. AND CONTAINS CONFIDENTIAL AND TRADE SECRET INFORMATION. THIS SHEET MAY NOT BE TRANSFERED FROM THE CUSTODY OF THE COMPETENT DIVISION OF R&D DEPARTMENT EXCEPT AS AUTHORIZED BY COMPAL ELECTRONICS, INC. NEITHER THIS SHEET NOR THE INFORMATION IT CONTAINS MAY BE USED BY OR DISCLOSED TO ANY THIRD PARTY WITHOUT PRIOR WRITTEN CONSENT OF COMPAL ELECTRONICS, INC.

Compal Electronics, Inc.

Title: **DDR-SODIMM SLOT0**

Size	Document Number	Rev
Custom	DAT20 LA-1971	0.3

Date: Friday, September 26, 2003 | Sheet 9 of 42

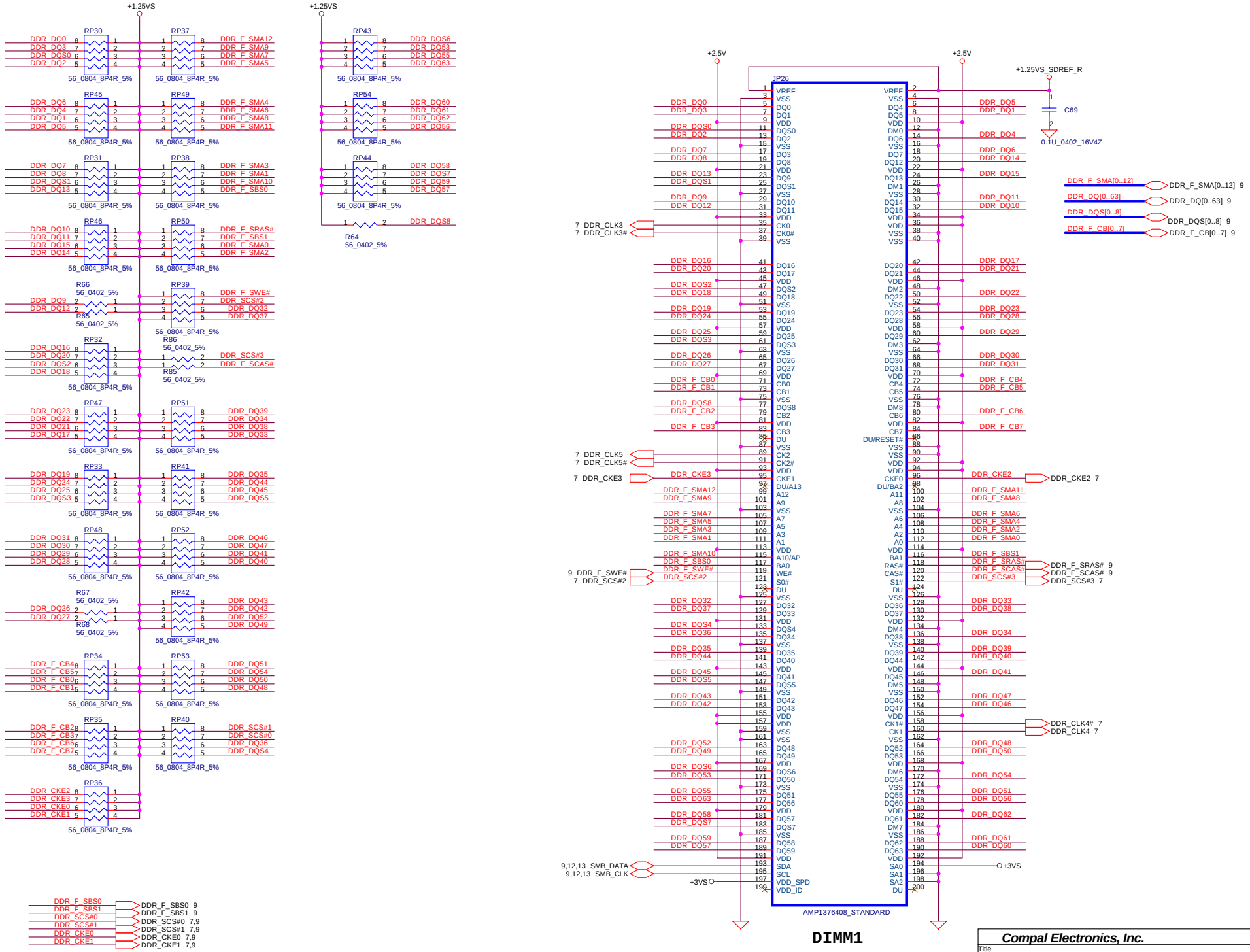

THIS SHEET OF ENGINEERING DRAWING IS THE PROPRIETARY PROPERTY OF COMPAL ELECTRONICS, INC. AND CONTAINS CONFIDENTIAL AND TRADE SECRET INFORMATION. THIS SHEET MAY NOT BE TRANSFERED FROM THE CUSTODY OF THE COMPETENT DIVISION OF R&D DEPARTMENT EXCEPT AS AUTHORIZED BY COMPAL ELECTRONICS, INC. NEITHER THIS SHEET NOR THE INFORMATION IT CONTAINS MAY BE USED BY OR DISCLOSED TO ANY THIRD PARTY WITHOUT PRIOR WRITTEN CONSENT OF COMPAL ELECTRONICS, INC.

Compal Electronics, Inc.

Title: **DDR-SODIMM SLOT1**

Size: Custom | Document Number: **DAT20 LA-1971** | Rev: 0.3

Date: Friday, September 26, 2003 | Sheet 10 of 42

Layout note :

Distribute as close as possible to DDR-SODIMM.

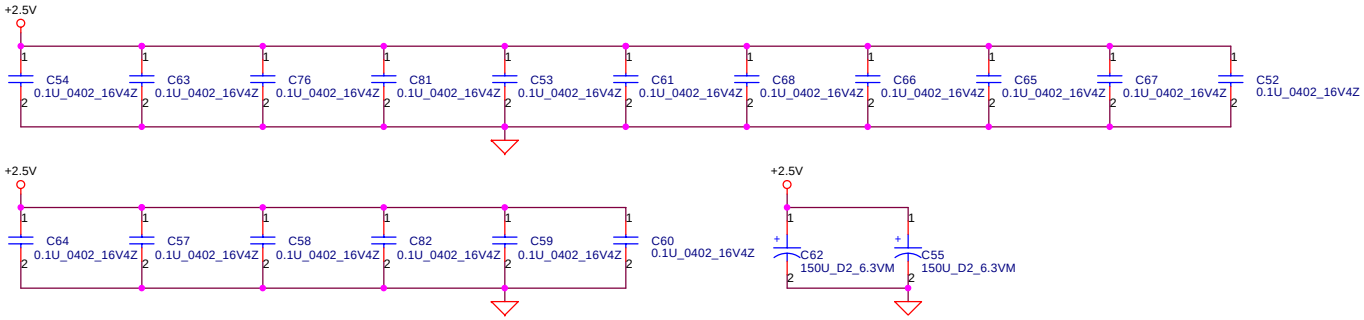

Layout note :

Place one cap close to every 2 pull up resistors termination to +1.25V

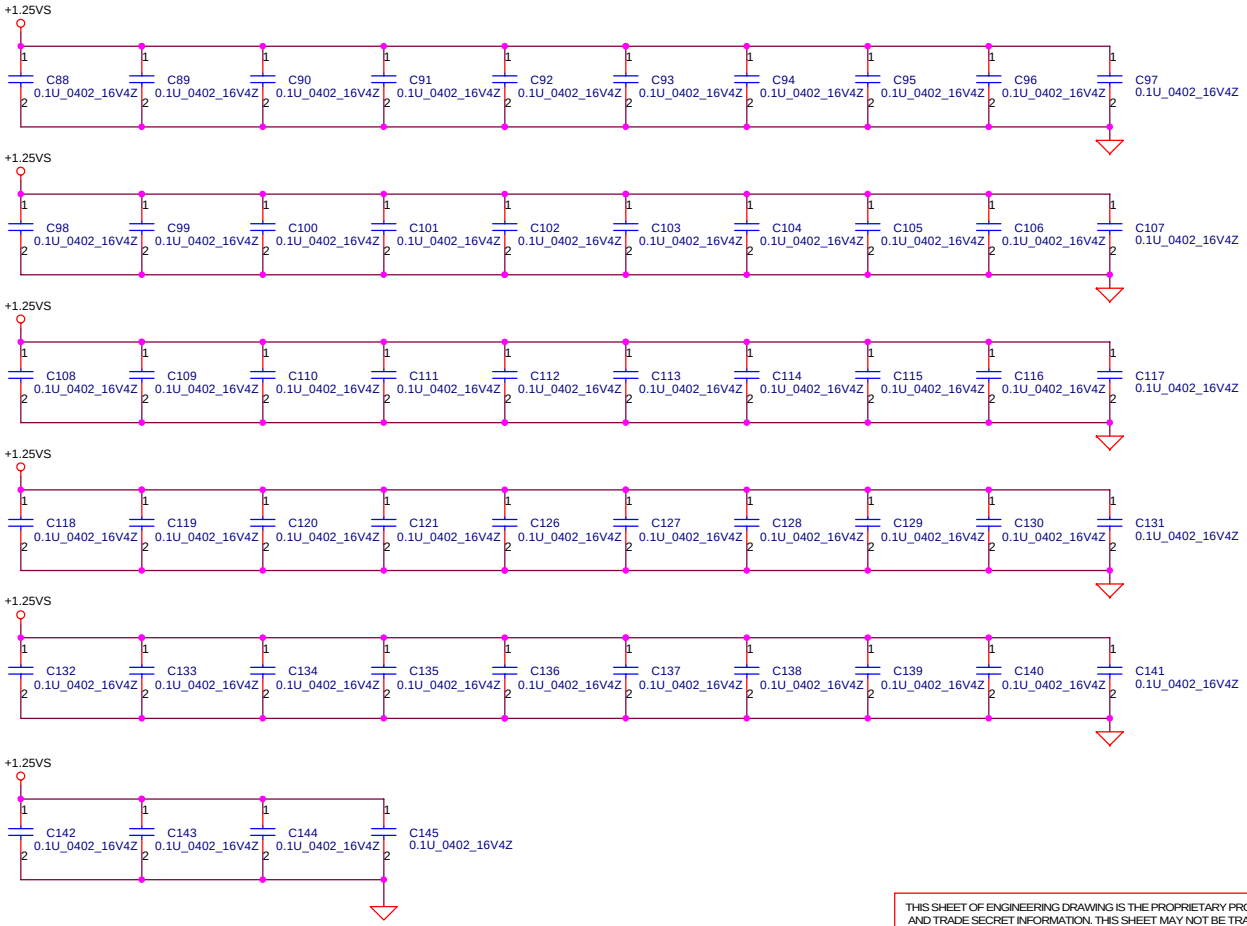

THIS SHEET OF ENGINEERING DRAWING IS THE PROPRIETARY PROPERTY OF COMPAL ELECTRONICS, INC. AND CONTAINS CONFIDENTIAL AND TRADE SECRET INFORMATION. THIS SHEET MAY NOT BE TRANSFERED FROM THE CUSTODY OF THE COMPETENT DIVISION OF R&D DEPARTMENT EXCEPT AS AUTHORIZED BY COMPAL ELECTRONICS, INC. NEITHER THIS SHEET NOR THE INFORMATION IT CONTAINS MAY BE USED BY OR DISCLOSED TO ANY THIRD PARTY WITHOUT PRIOR WRITTEN CONSENT OF COMPAL ELECTRONICS, INC.

Compal Electronics, Inc.		
Title: **DDR SODIMM Decoupling**		
Size: Custom	Document Number: **DAT20 LA-1971**	Rev: 0.3
Date: Friday, September 26, 2003	Sheet 11 of 42	

Clock Generator

SEL2	SEL1	SEL0	CPUCLKC[0..2]	CPUCLKT[0..2]
0	0	0	166.67	166.67
0	**0**	**1**	**100.00**	**100.00**
0	1	0	200.00	200.00
0	1	1	133.33	133.33

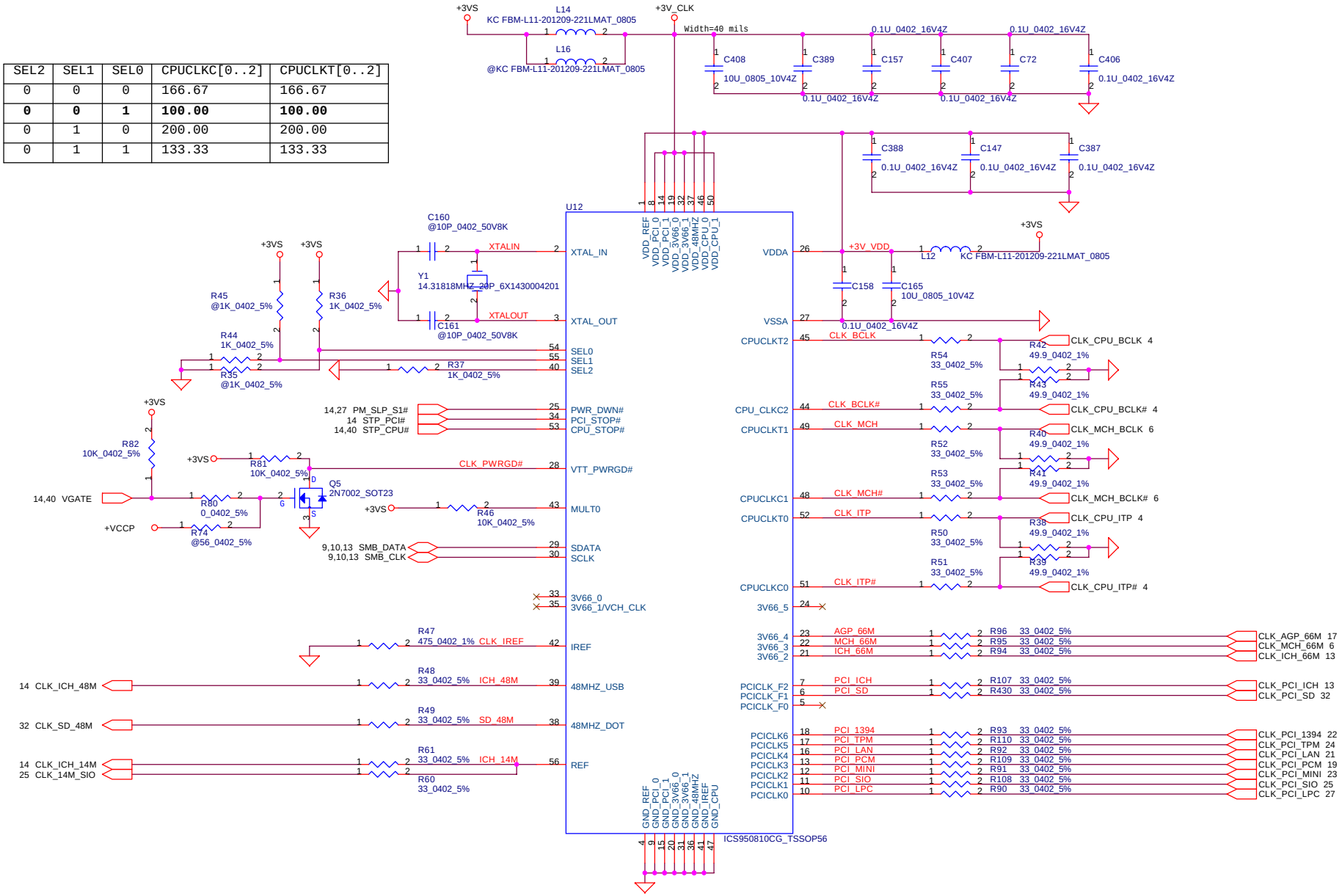

THIS SHEET OF ENGINEERING DRAWING IS THE PROPRIETARY PROPERTY OF COMPAL ELECTRONICS, INC. AND CONTAINS CONFIDENTIAL AND TRADE SECRET INFORMATION. THIS SHEET MAY NOT BE TRANSFERED FROM THE CUSTODY OF THE COMPETENT DIVISION OF R&D DEPARTMENT EXCEPT AS AUTHORIZED BY COMPAL ELECTRONICS, INC. NEITHER THIS SHEET NOR THE INFORMATION IT CONTAINS MAY BE USED BY OR DISCLOSED TO ANY THIRD PARTY WITHOUT PRIOR WRITTEN CONSENT OF COMPAL ELECTRONICS, INC.

Compal Electronics, Inc.

Title: **Clock Generator**

Size: Custom | Document Number: **DAT20 LA-1971** | Rev: 0.3

Date: Friday, September 26, 2003 | Sheet 12 of 42

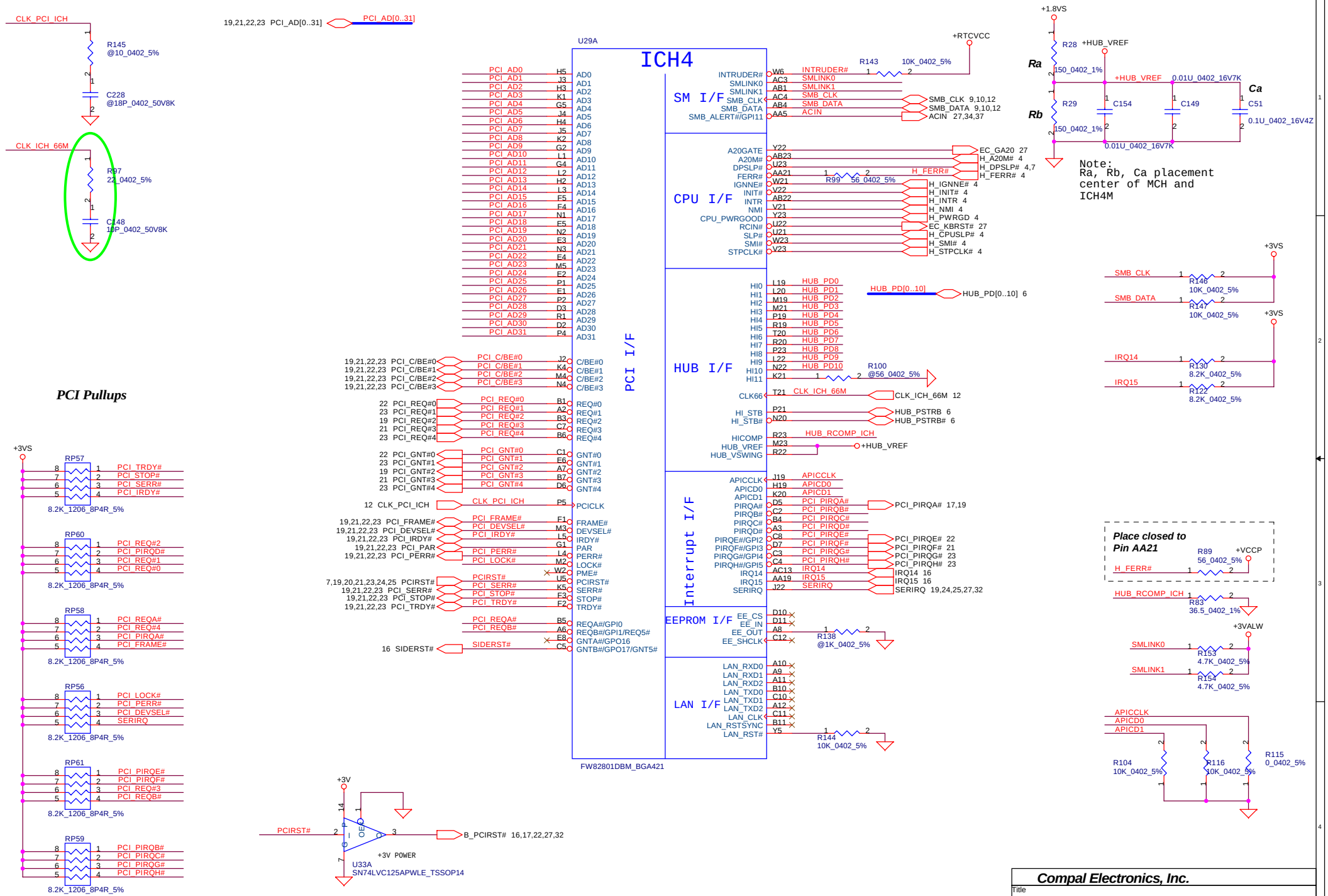
ICH4
U29A
PCI I/F
SM I/F
CPU I/F
HUB I/F
Interrupt I/F
EEPROM I/F
LAN I/F
FW82801DBM_BGA421
PCI Pullups
Ra
Rb
Ca
Note:
Ra, Rb, Ca placement center of MCH and ICH4M
Place closed to Pin AA21
U33A
SN74LVC125APWLE_TSSOP14
+3V POWER
Compal Electronics, Inc.
ICH4-M (1/3)
DAT20 LA-1971
Friday, September 26, 2003
Sheet 13 of 42
THIS SHEET OF ENGINEERING DRAWING IS THE PROPRIETARY PROPERTY OF COMPAL ELECTRONICS, INC. AND CONTAINS CONFIDENTIAL AND TRADE SECRET INFORMATION. THIS SHEET MAY NOT BE TRANSFERED FROM THE CUSTODY OF THE COMPETENT DIVISION OF R&D DEPARTMENT EXCEPT AS AUTHORIZED BY COMPAL ELECTRONICS, INC. NEITHER THIS SHEET NOR THE INFORMATION IT CONTAINS MAY BE USED BY OR DISCLOSED TO ANY THIRD PARTY WITHOUT PRIOR WRITTEN CONSENT OF COMPAL ELECTRONICS, INC.

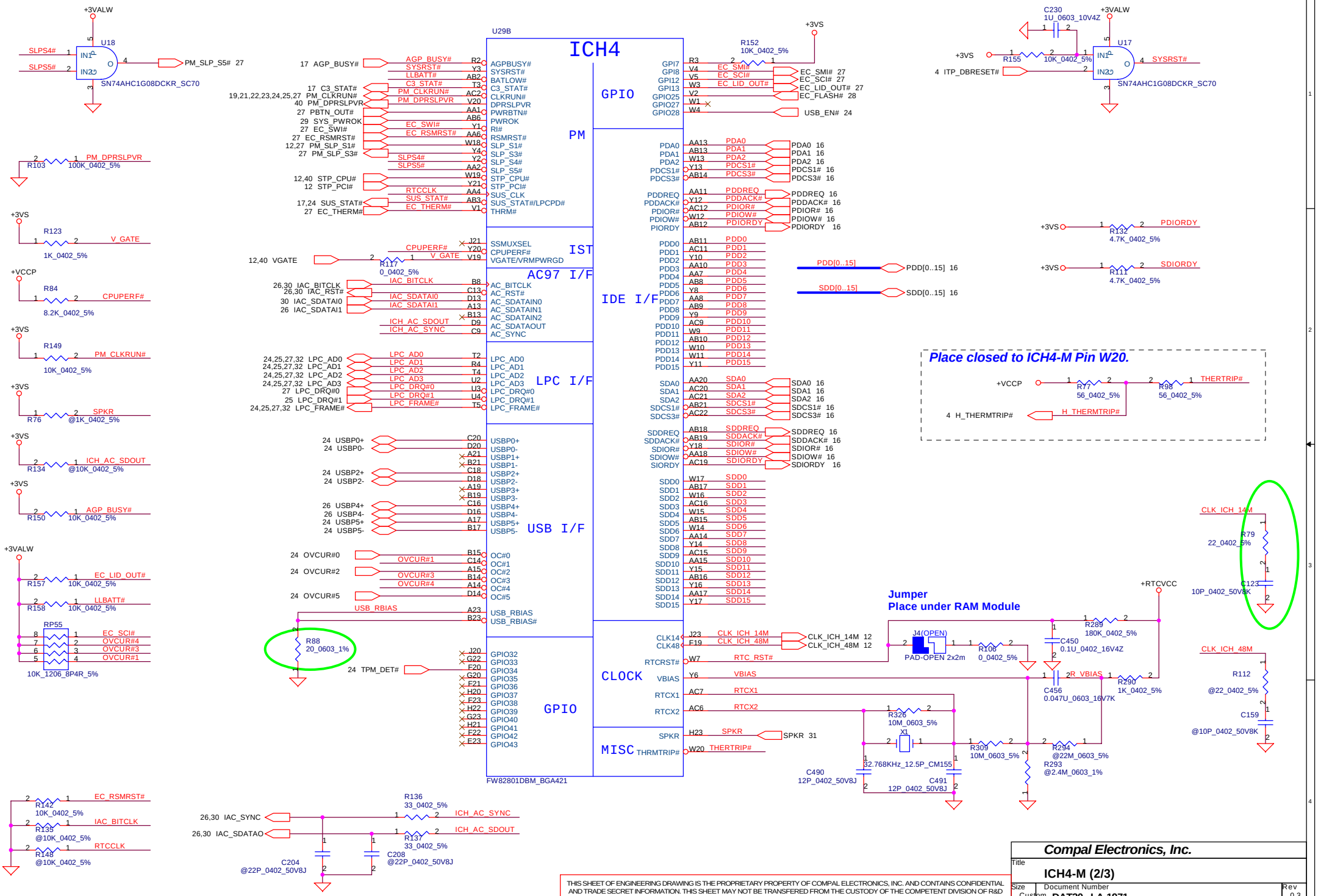

THIS SHEET OF ENGINEERING DRAWING IS THE PROPRIETARY PROPERTY OF COMPAL ELECTRONICS, INC. AND CONTAINS CONFIDENTIAL AND TRADE SECRET INFORMATION. THIS SHEET MAY NOT BE TRANSFERED FROM THE CUSTODY OF THE COMPETENT DIVISION OF R&D DEPARTMENT EXCEPT AS AUTHORIZED BY COMPAL ELECTRONICS, INC. NEITHER THIS SHEET NOR THE INFORMATION IT CONTAINS MAY BE USED BY OR DISCLOSED TO ANY THIRD PARTY WITHOUT PRIOR WRITTEN CONSENT OF COMPAL ELECTRONICS, INC.

Compal Electronics, Inc.	
Title	ICH4-M (2/3)
Size Custom	Document Number DAT20 LA-1971
Rev	0.3
Date: Friday, September 26, 2003	Sheet 14 of 42

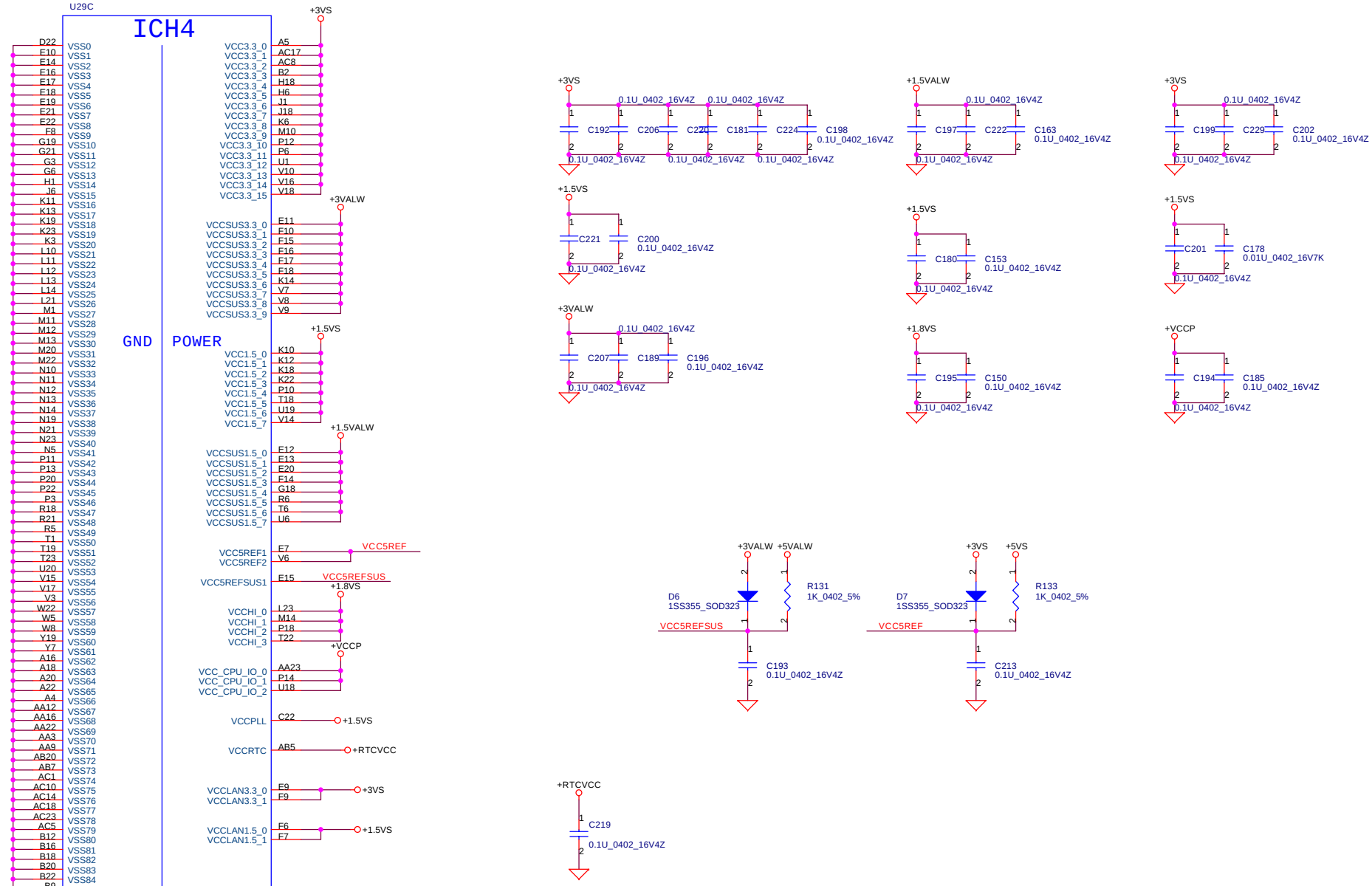

THIS SHEET OF ENGINEERING DRAWING IS THE PROPRIETARY PROPERTY OF COMPAL ELECTRONICS, INC. AND CONTAINS CONFIDENTIAL AND TRADE SECRET INFORMATION. THIS SHEET MAY NOT BE TRANSFERED FROM THE CUSTODY OF THE COMPETENT DIVISION OF R&D DEPARTMENT EXCEPT AS AUTHORIZED BY COMPAL ELECTRONICS, INC. NEITHER THIS SHEET NOR THE INFORMATION IT CONTAINS MAY BE USED BY OR DISCLOSED TO ANY THIRD PARTY WITHOUT PRIOR WRITTEN CONSENT OF COMPAL ELECTRONICS, INC.

Compal Electronics, Inc.

Title: **ICH4-M (3/3)**

Size: Custom | Document Number: **DAT20 LA-1971** | Rev: 0.3

Date: Friday, September 26, 2003 | Sheet 15 of 42

HDD Connector

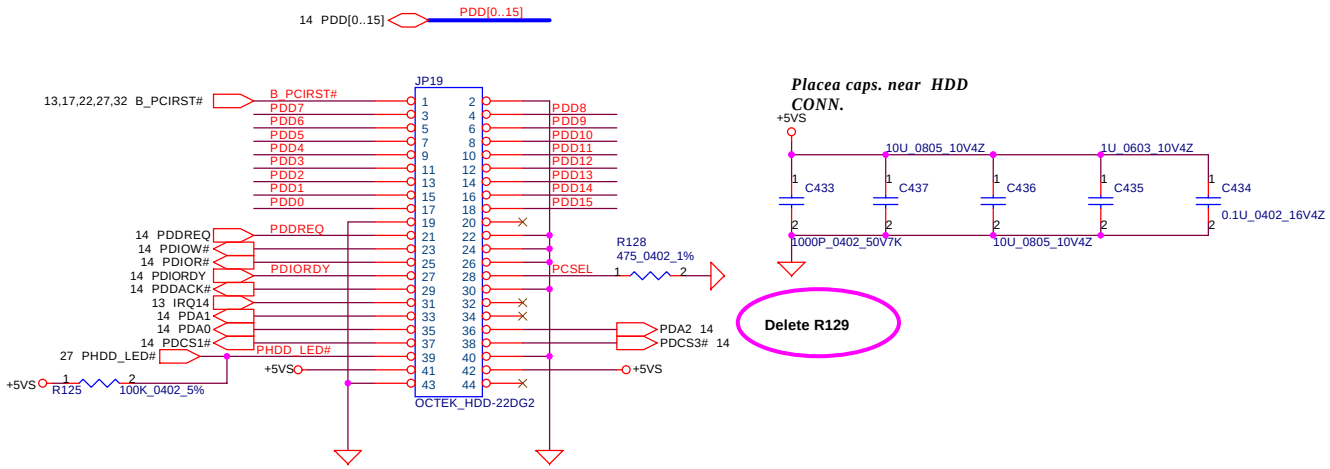

Placea caps. near HDD CONN.

CD-ROM Connector

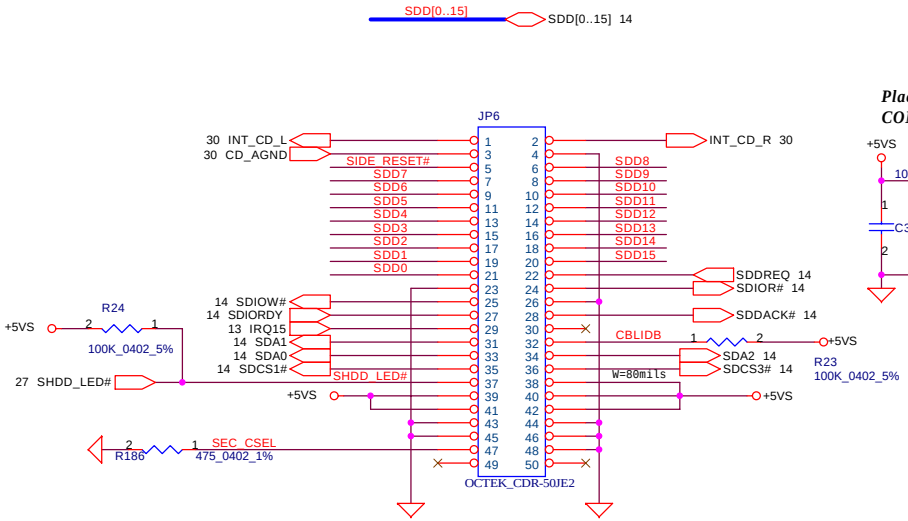

Change PCB Footprint.

Place caps. near CDROM CONN.

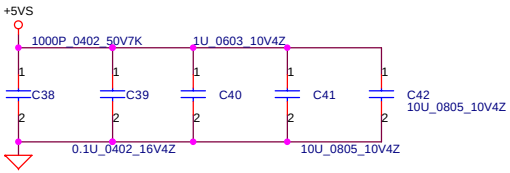

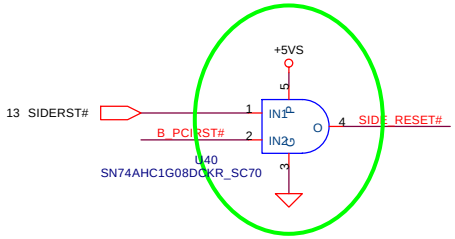

THIS SHEET OF ENGINEERING DRAWING IS THE PROPRIETARY PROPERTY OF COMPAL ELECTRONICS, INC. AND CONTAINS CONFIDENTIAL AND TRADE SECRET INFORMATION. THIS SHEET MAY NOT BE TRANSFERED FROM THE CUSTODY OF THE COMPETENT DIVISION OF R&D DEPARTMENT EXCEPT AS AUTHORIZED BY COMPAL ELECTRONICS, INC. NEITHER THIS SHEET NOR THE INFORMATION IT CONTAINS MAY BE USED BY OR DISCLOSED TO ANY THIRD PARTY WITHOUT PRIOR WRITTEN CONSENT OF COMPAL ELECTRONICS, INC.

Compal Electronics, Inc.		
Title: IDE/CD-ROM Module		
Size: Custom	Document Number: DAT20 LA-1971	Rev: 0.3
Date: Friday, September 26, 2003	Sheet 16 of 42	

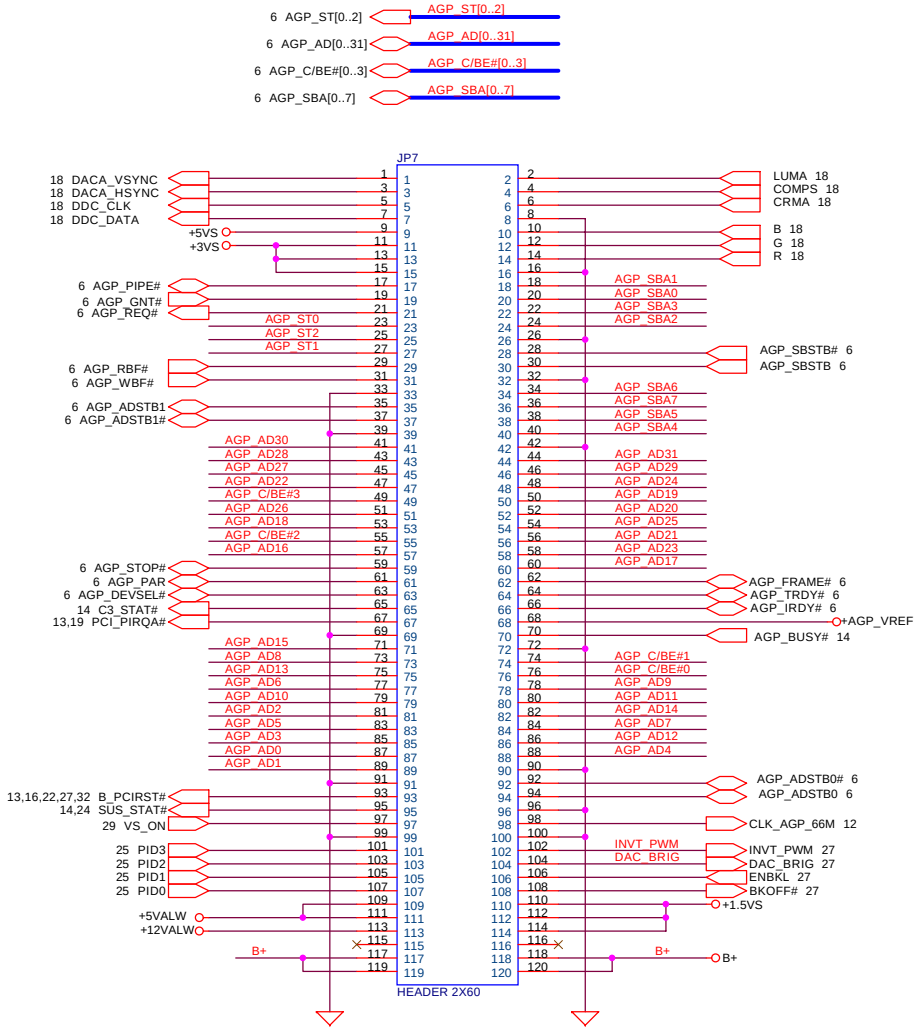

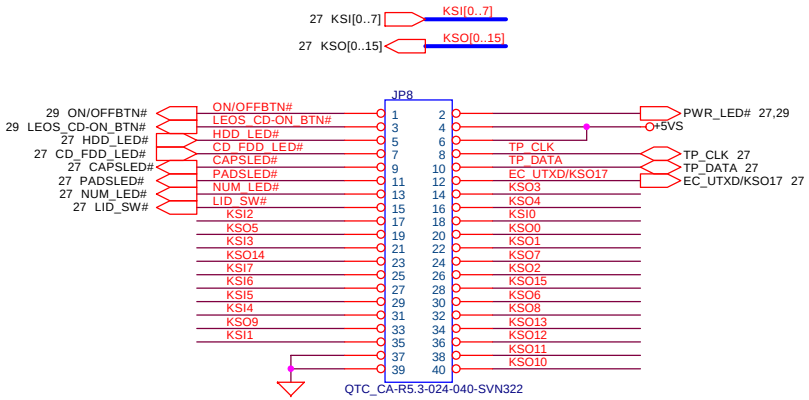

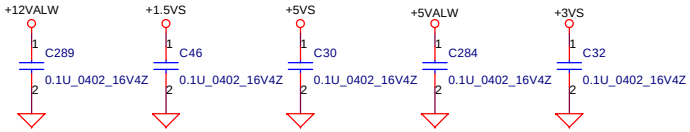

THIS SHEET OF ENGINEERING DRAWING IS THE PROPRIETARY PROPERTY OF COMPAL ELECTRONICS, INC. AND CONTAINS CONFIDENTIAL AND TRADE SECRET INFORMATION. THIS SHEET MAY NOT BE TRANSFERED FROM THE CUSTODY OF THE COMPETENT DIVISION OF R&D DEPARTMENT EXCEPT AS AUTHORIZED BY COMPAL ELECTRONICS, INC. NEITHER THIS SHEET NOR THE INFORMATION IT CONTAINS MAY BE USED BY OR DISCLOSED TO ANY THIRD PARTY WITHOUT PRIOR WRITTEN CONSENT OF COMPAL ELECTRONICS, INC.

Compal Electronics, Inc.

Title: **AGP Connector**

Size: Custom | Document Number: **DAT20 LA-1971** | Rev: 0.3

Date: Friday, September 26, 2003 | Sheet 17 of 42

CRT, TV-OUT CONNECTOR

TV-OUT Conn.

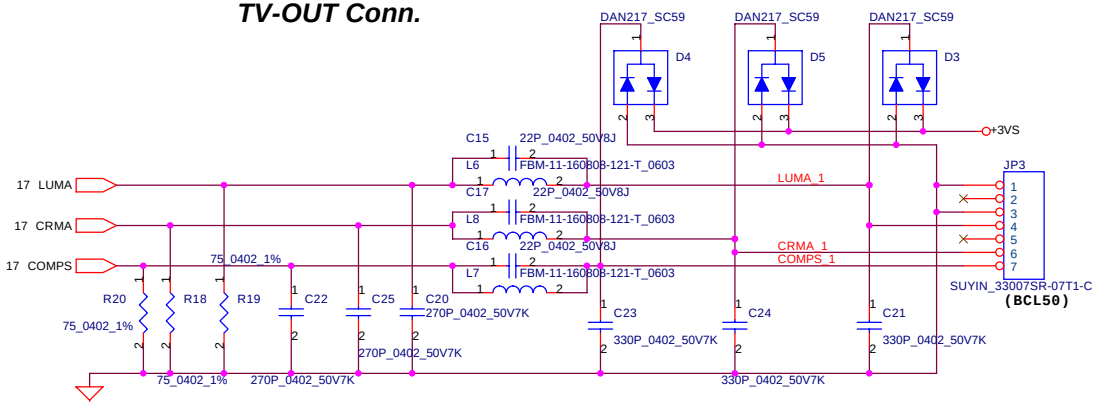

CRT Conn.

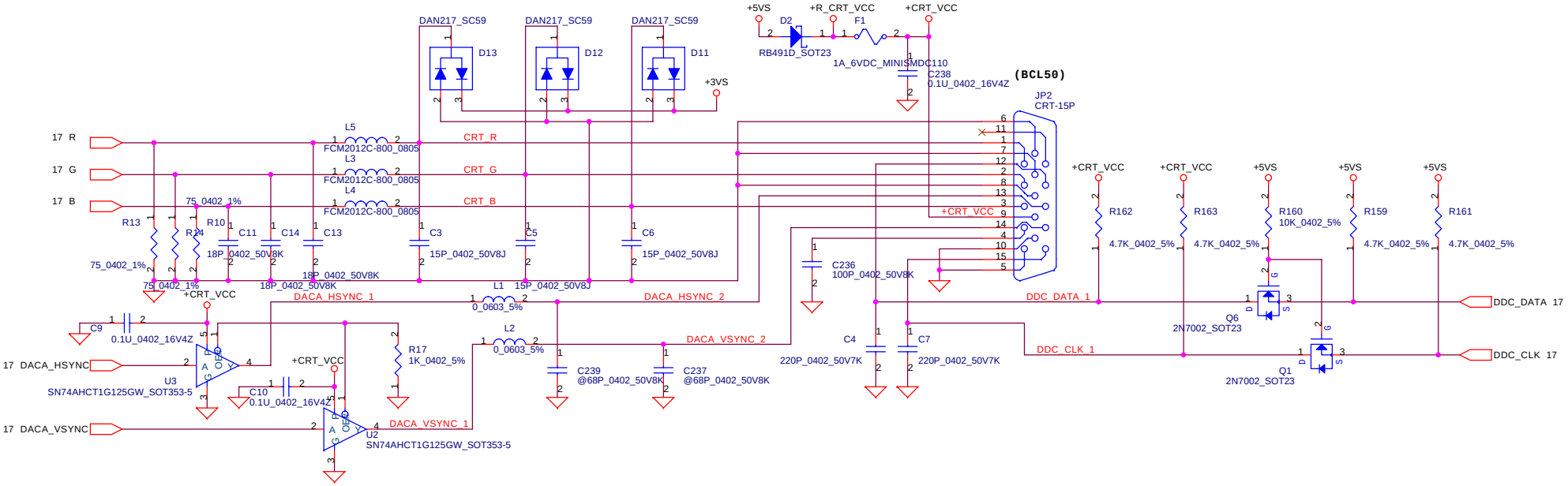

THIS SHEET OF ENGINEERING DRAWING IS THE PROPRIETARY PROPERTY OF COMPAL ELECTRONICS, INC. AND CONTAINS CONFIDENTIAL AND TRADE SECRET INFORMATION. THIS SHEET MAY NOT BE TRANSFERED FROM THE CUSTODY OF THE COMPETENT DIVISION OF R&D DEPARTMENT EXCEPT AS AUTHORIZED BY COMPAL ELECTRONICS, INC. NEITHER THIS SHEET NOR THE INFORMATION IT CONTAINS MAY BE USED BY OR DISCLOSED TO ANY THIRD PARTY WITHOUT PRIOR WRITTEN CONSENT OF COMPAL ELECTRONICS, INC.

Compal Electronics, Inc.			
Title	CRT,TV-OUT CONNECTOR		
Size Custom	Document Number DAT20 LA-1971		Rev 0.3
Date: Friday, September 26, 2003	Sheet 18 of 42		

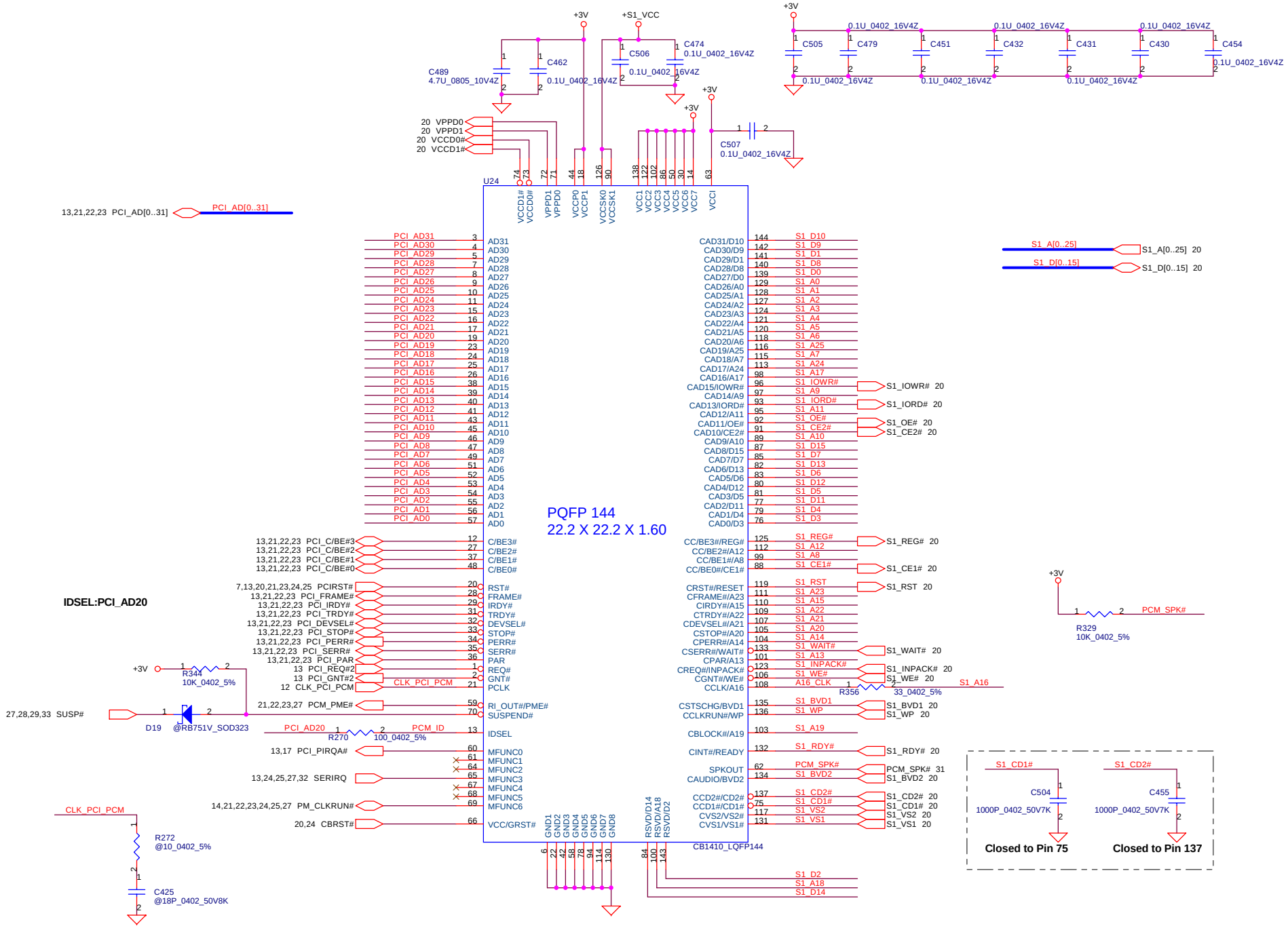

THIS SHEET OF ENGINEERING DRAWING IS THE PROPRIETARY PROPERTY OF COMPAL ELECTRONICS, INC. AND CONTAINS CONFIDENTIAL AND TRADE SECRET INFORMATION. THIS SHEET MAY NOT BE TRANSFERED FROM THE CUSTODY OF THE COMPETENT DIVISION OF R&D DEPARTMENT EXCEPT AS AUTHORIZED BY COMPAL ELECTRONICS, INC. NEITHER THIS SHEET NOR THE INFORMATION IT CONTAINS MAY BE USED BY OR DISCLOSED TO ANY THIRD PARTY WITHOUT PRIOR WRITTEN CONSENT OF COMPAL ELECTRONICS, INC.

Compal Electronics, Inc.	
Title	PCMCIA controller ENE CB1410
Size: Custom	Document Number: DAT20 LA-1971
Rev	0.3
Date: Friday, September 26, 2003	Sheet 19 of 42

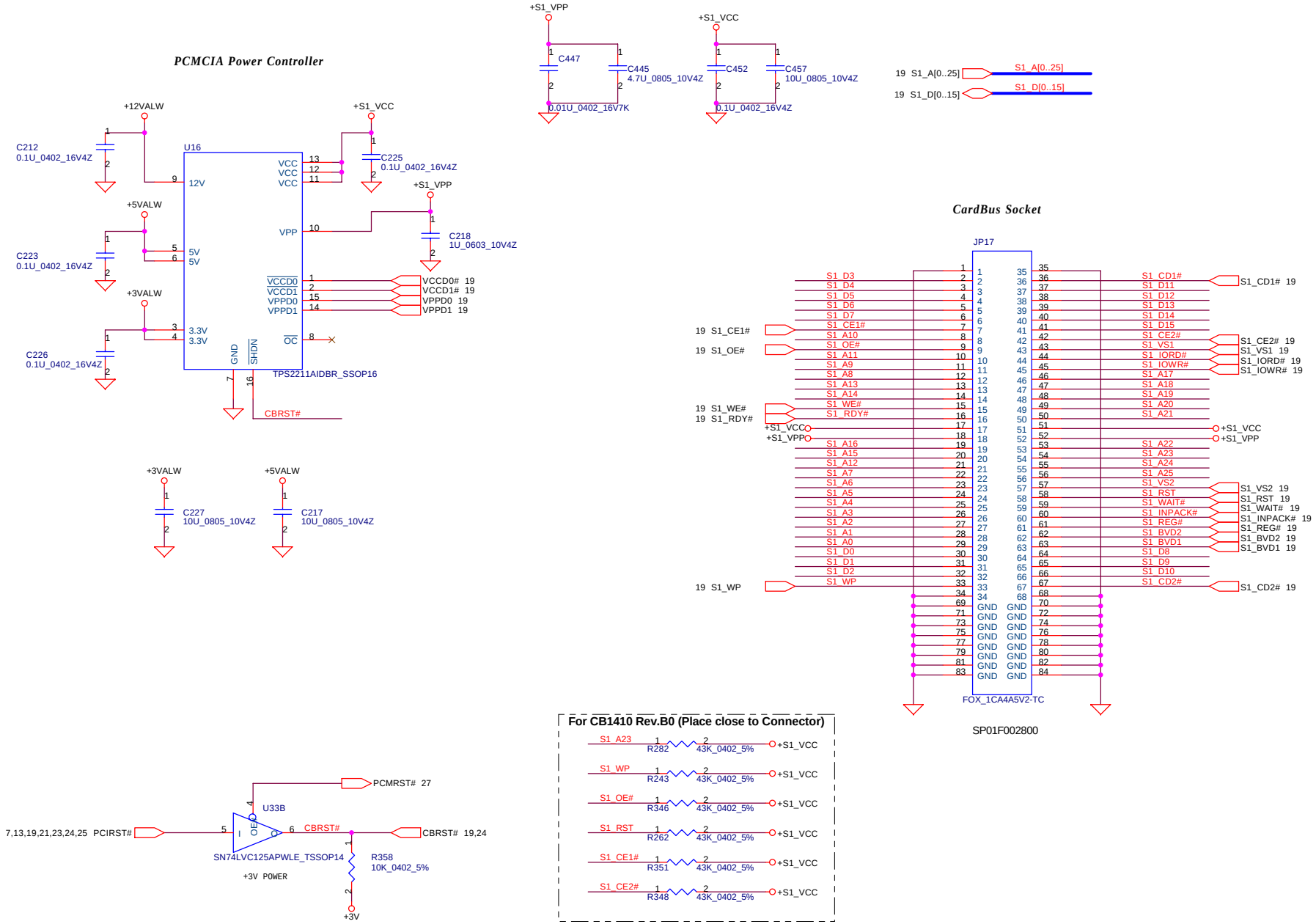

THIS SHEET OF ENGINEERING DRAWING IS THE PROPRIETARY PROPERTY OF COMPAL ELECTRONICS, INC. AND CONTAINS CONFIDENTIAL AND TRADE SECRET INFORMATION. THIS SHEET MAY NOT BE TRANSFERED FROM THE CUSTODY OF THE COMPETENT DIVISION OF R&D DEPARTMENT EXCEPT AS AUTHORIZED BY COMPAL ELECTRONICS, INC. NEITHER THIS SHEET NOR THE INFORMATION IT CONTAINS MAY BE USED BY OR DISCLOSED TO ANY THIRD PARTY WITHOUT PRIOR WRITTEN CONSENT OF COMPAL ELECTRONICS, INC.

Compal Electronics, Inc.

Title: **CardBus Socket**

Size: Custom | Document Number: **DAT20 LA-1971** | Rev: 0.3

Date: Friday, September 26, 2003 | Sheet 20 of 42

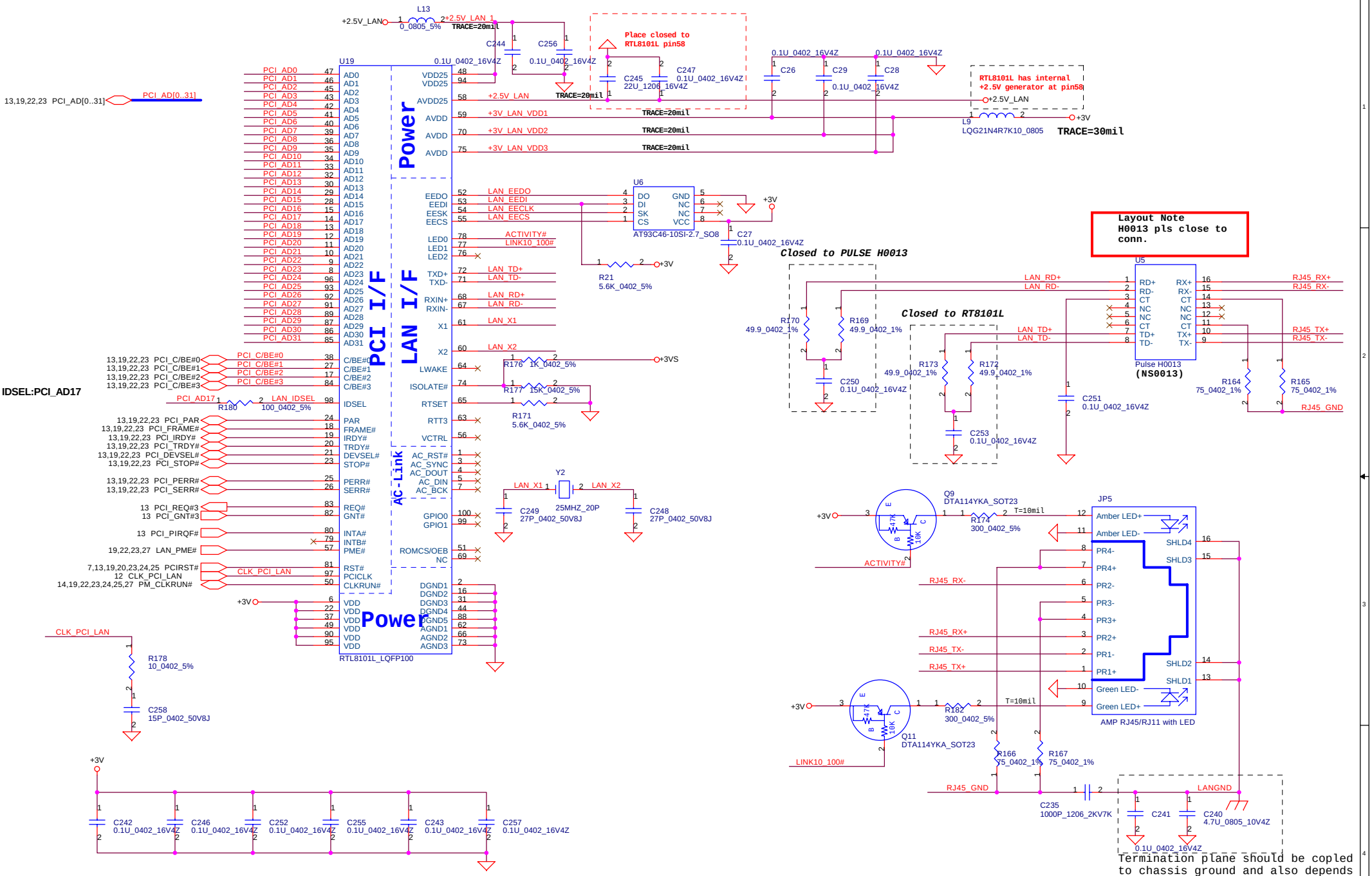

THIS SHEET OF ENGINEERING DRAWING IS THE PROPRIETARY PROPERTY OF COMPAL ELECTRONICS, INC. AND CONTAINS CONFIDENTIAL AND TRADE SECRET INFORMATION. THIS SHEET MAY NOT BE TRANSFERED FROM THE CUSTODY OF THE COMPETENT DIVISION OF R&D DEPARTMENT EXCEPT AS AUTHORIZED BY COMPAL ELECTRONICS, INC. NEITHER THIS SHEET NOR THE INFORMATION IT CONTAINS MAY BE USED BY OR DISCLOSED TO ANY THIRD PARTY WITHOUT PRIOR WRITTEN CONSENT OF COMPAL ELECTRONICS, INC.

Compal Electronics, Inc.	
Title	LAN REALTEK RTL8101L
Size: Custom	Document Number: DAT20 LA-1971
Rev	0.3
Date: Friday, September 26, 2003	Sheet 21 of 42

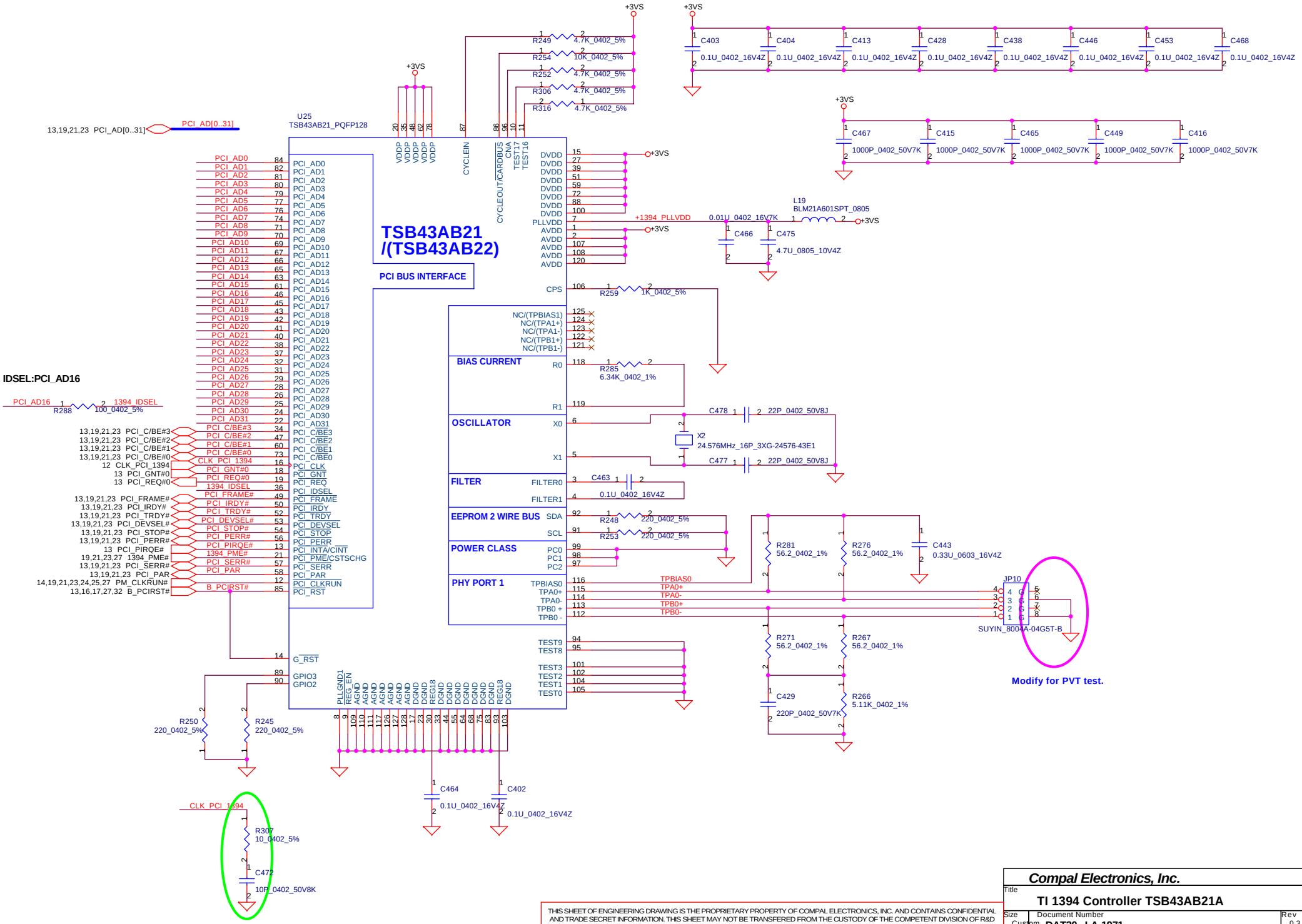

THIS SHEET OF ENGINEERING DRAWING IS THE PROPRIETARY PROPERTY OF COMPAL ELECTRONICS, INC. AND CONTAINS CONFIDENTIAL AND TRADE SECRET INFORMATION. THIS SHEET MAY NOT BE TRANSFERED FROM THE CUSTODY OF THE COMPETENT DIVISION OF R&D DEPARTMENT EXCEPT AS AUTHORIZED BY COMPAL ELECTRONICS, INC. NEITHER THIS SHEET NOR THE INFORMATION IT CONTAINS MAY BE USED BY OR DISCLOSED TO ANY THIRD PARTY WITHOUT PRIOR WRITTEN CONSENT OF COMPAL ELECTRONICS, INC.

Compal Electronics, Inc.

Title: **TI 1394 Controller TSB43AB21A**

Size: Custom | Document Number: **DAT20 LA-1971** | Rev: 0.3

Date: Friday, September 26, 2003 | Sheet 22 of 42

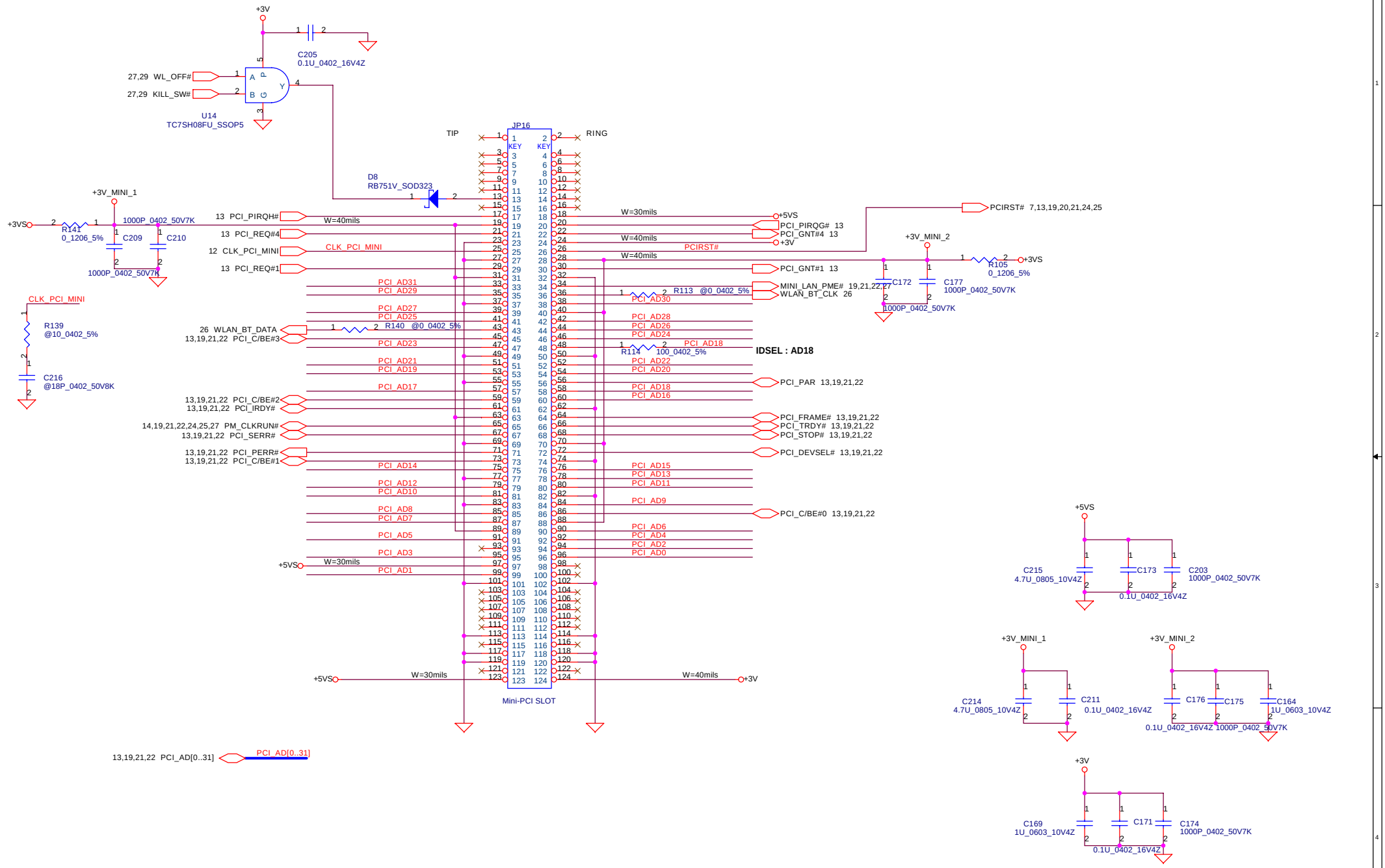

THIS SHEET OF ENGINEERING DRAWING IS THE PROPRIETARY PROPERTY OF COMPAL ELECTRONICS, INC. AND CONTAINS CONFIDENTIAL AND TRADE SECRET INFORMATION. THIS SHEET MAY NOT BE TRANSFERED FROM THE CUSTODY OF THE COMPETENT DIVISION OF R&D DEPARTMENT EXCEPT AS AUTHORIZED BY COMPAL ELECTRONICS, INC. NEITHER THIS SHEET NOR THE INFORMATION IT CONTAINS MAY BE USED BY OR DISCLOSED TO ANY THIRD PARTY WITHOUT PRIOR WRITTEN CONSENT OF COMPAL ELECTRONICS, INC.

Compal Electronics, Inc.

Title: **Mini PCI Slot**

Size: Custom | Document Number: **DAT20 LA-1971** | Rev: 0.3

Date: Friday, September 26, 2003 | Sheet 23 of 42

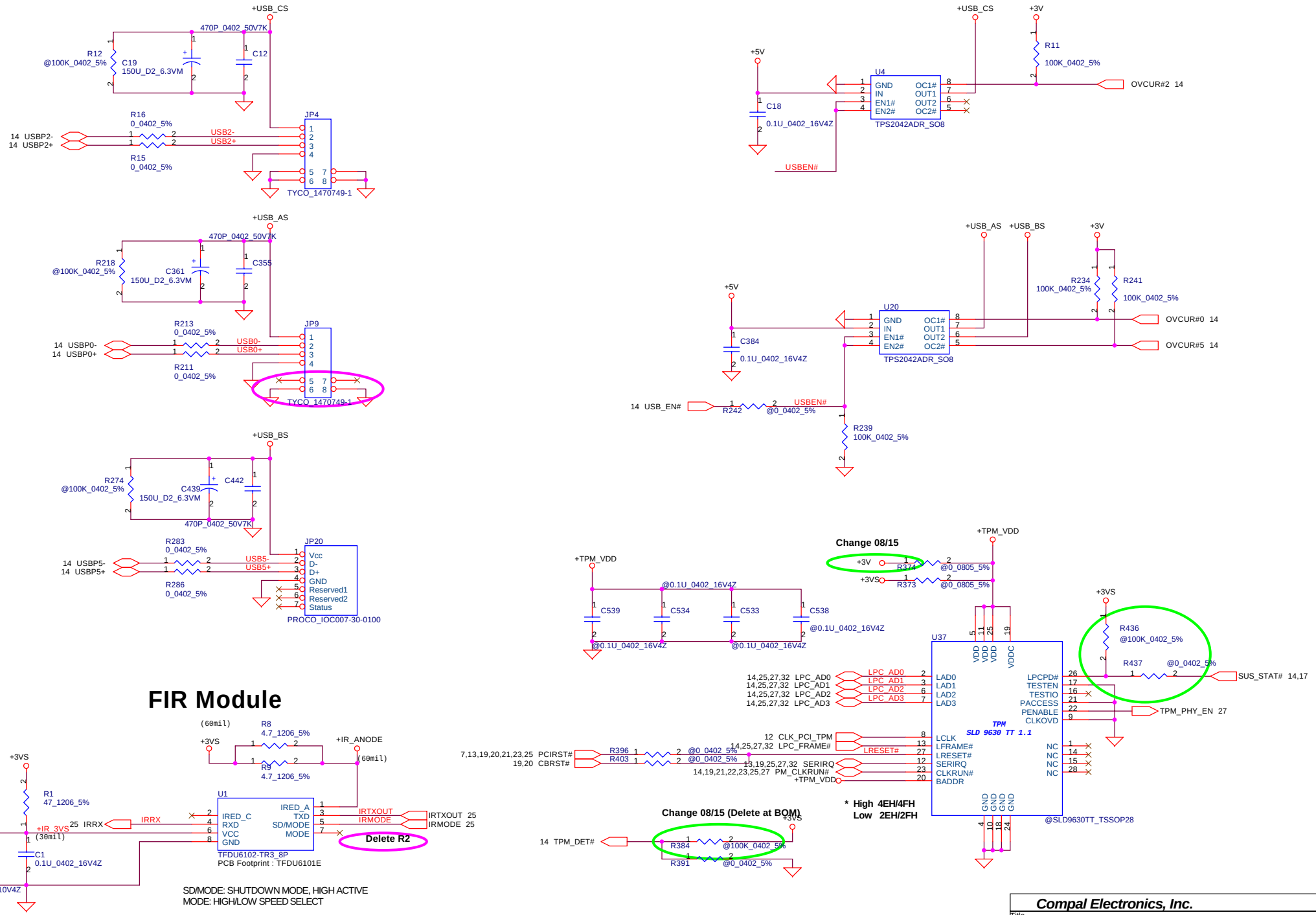

THIS SHEET OF ENGINEERING DRAWING IS THE PROPRIETARY PROPERTY OF COMPAL ELECTRONICS, INC. AND CONTAINS CONFIDENTIAL AND TRADE SECRET INFORMATION. THIS SHEET MAY NOT BE TRANSFERED FROM THE CUSTODY OF THE COMPETENT DIVISION OF R&D DEPARTMENT EXCEPT AS AUTHORIZED BY COMPAL ELECTRONICS, INC. NEITHER THIS SHEET NOR THE INFORMATION IT CONTAINS MAY BE USED BY OR DISCLOSED TO ANY THIRD PARTY WITHOUT PRIOR WRITTEN CONSENT OF COMPAL ELECTRONICS, INC.

Compal Electronics, Inc.

Title: **USB / FIR / TPM**

Size: Custom | Document Number: **DAT20 LA-1971** | Rev: 0.3

Date: Friday, September 26, 2003 | Sheet 24 of 42

SUPER I/O SMsC LPC47N217

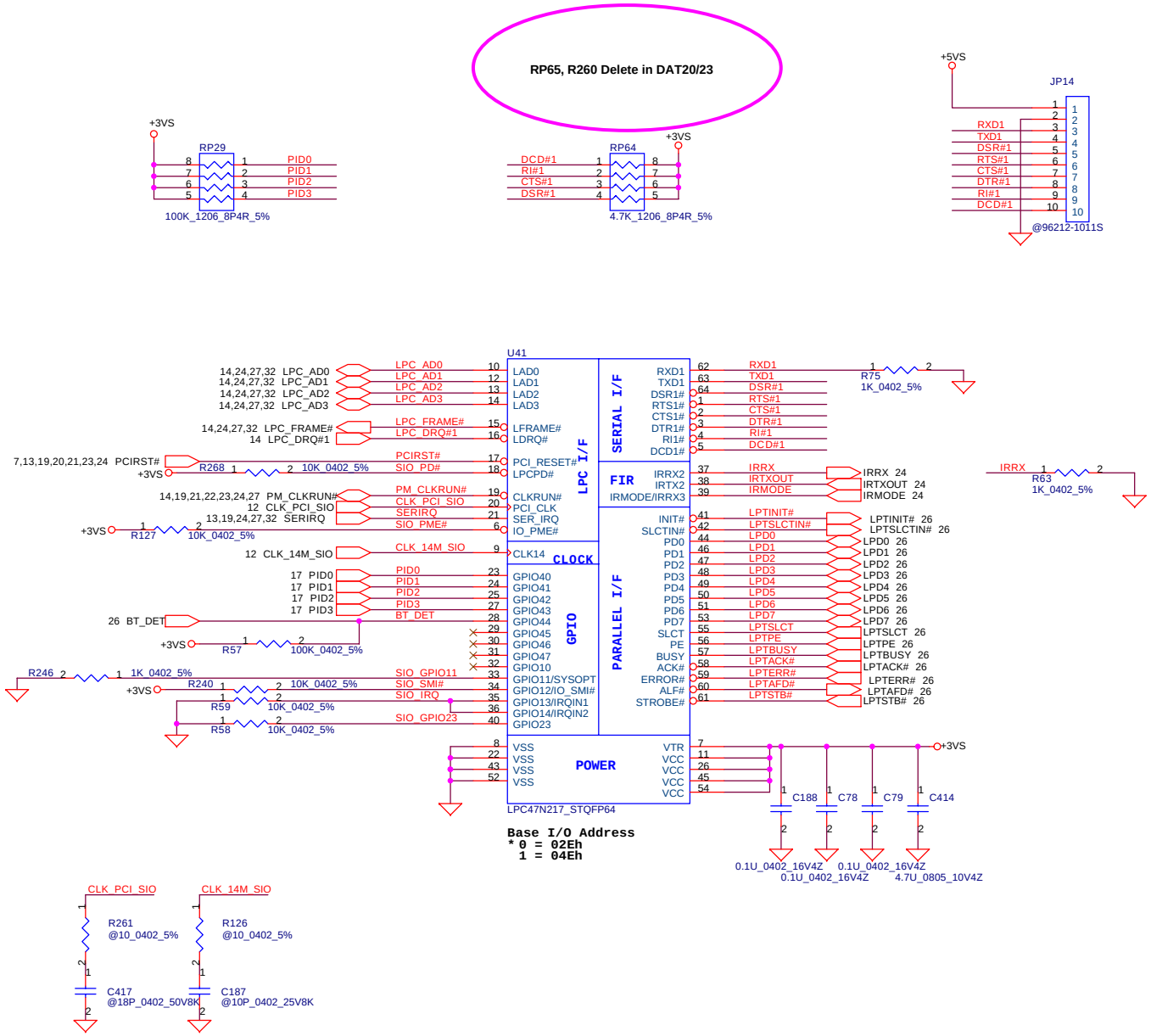

THIS SHEET OF ENGINEERING DRAWING IS THE PROPRIETARY PROPERTY OF COMPAL ELECTRONICS, INC. AND CONTAINS CONFIDENTIAL AND TRADE SECRET INFORMATION. THIS SHEET MAY NOT BE TRANSFERED FROM THE CUSTODY OF THE COMPETENT DIVISION OF R&D DEPARTMENT EXCEPT AS AUTHORIZED BY COMPAL ELECTRONICS, INC. NEITHER THIS SHEET NOR THE INFORMATION IT CONTAINS MAY BE USED BY OR DISCLOSED TO ANY THIRD PARTY WITHOUT PRIOR WRITTEN CONSENT OF COMPAL ELECTRONICS, INC.

Compal Electronics, Inc.	
Title	SUPER I/O LPC47N217
Size: Custom	Document Number: DAT20 LA-1971
Rev	0.3
Date: Friday, September 26, 2003	Sheet 25 of 42

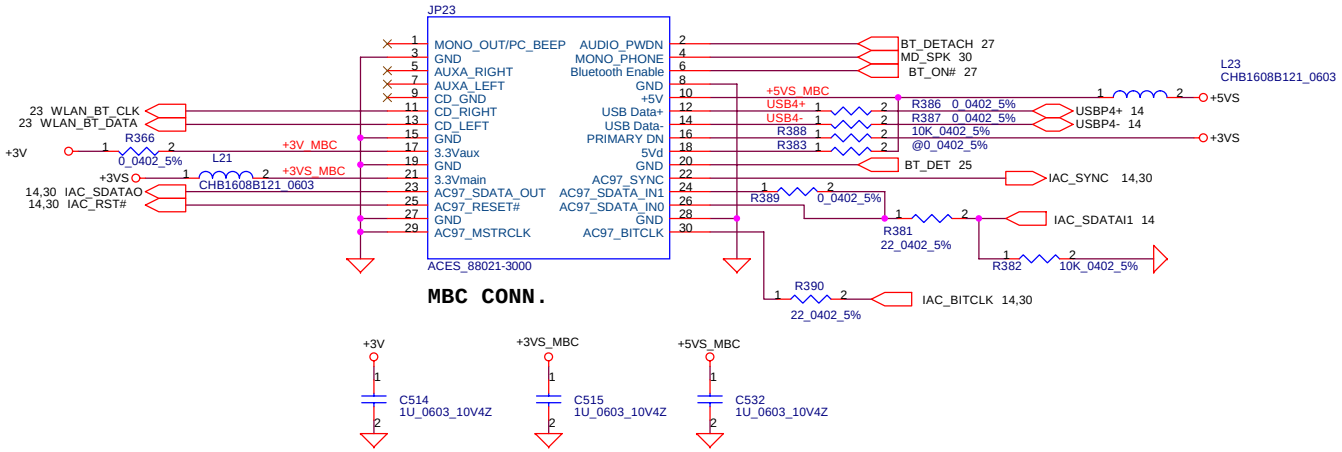

PARALLEL PORT

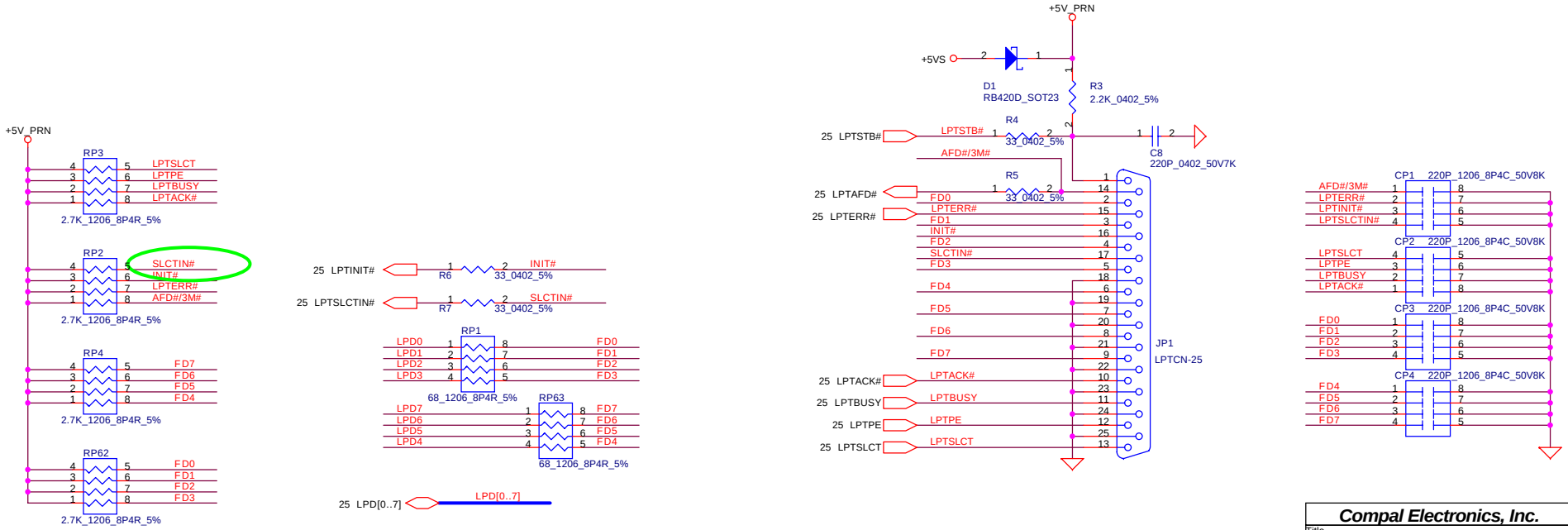

THIS SHEET OF ENGINEERING DRAWING IS THE PROPRIETARY PROPERTY OF COMPAL ELECTRONICS, INC. AND CONTAINS CONFIDENTIAL AND TRADE SECRET INFORMATION. THIS SHEET MAY NOT BE TRANSFERED FROM THE CUSTODY OF THE COMPETENT DIVISION OF R&D DEPARTMENT EXCEPT AS AUTHORIZED BY COMPAL ELECTRONICS, INC. NEITHER THIS SHEET NOR THE INFORMATION IT CONTAINS MAY BE USED BY OR DISCLOSED TO ANY THIRD PARTY WITHOUT PRIOR WRITTEN CONSENT OF COMPAL ELECTRONICS, INC.

Compal Electronics, Inc.

Title: **PARALLEL / MDC PORT**

Size: Custom | Document Number: **DAT20 LA-1971** | Rev: 0.3

Date: Friday, September 26, 2003 | Sheet 26 of 42

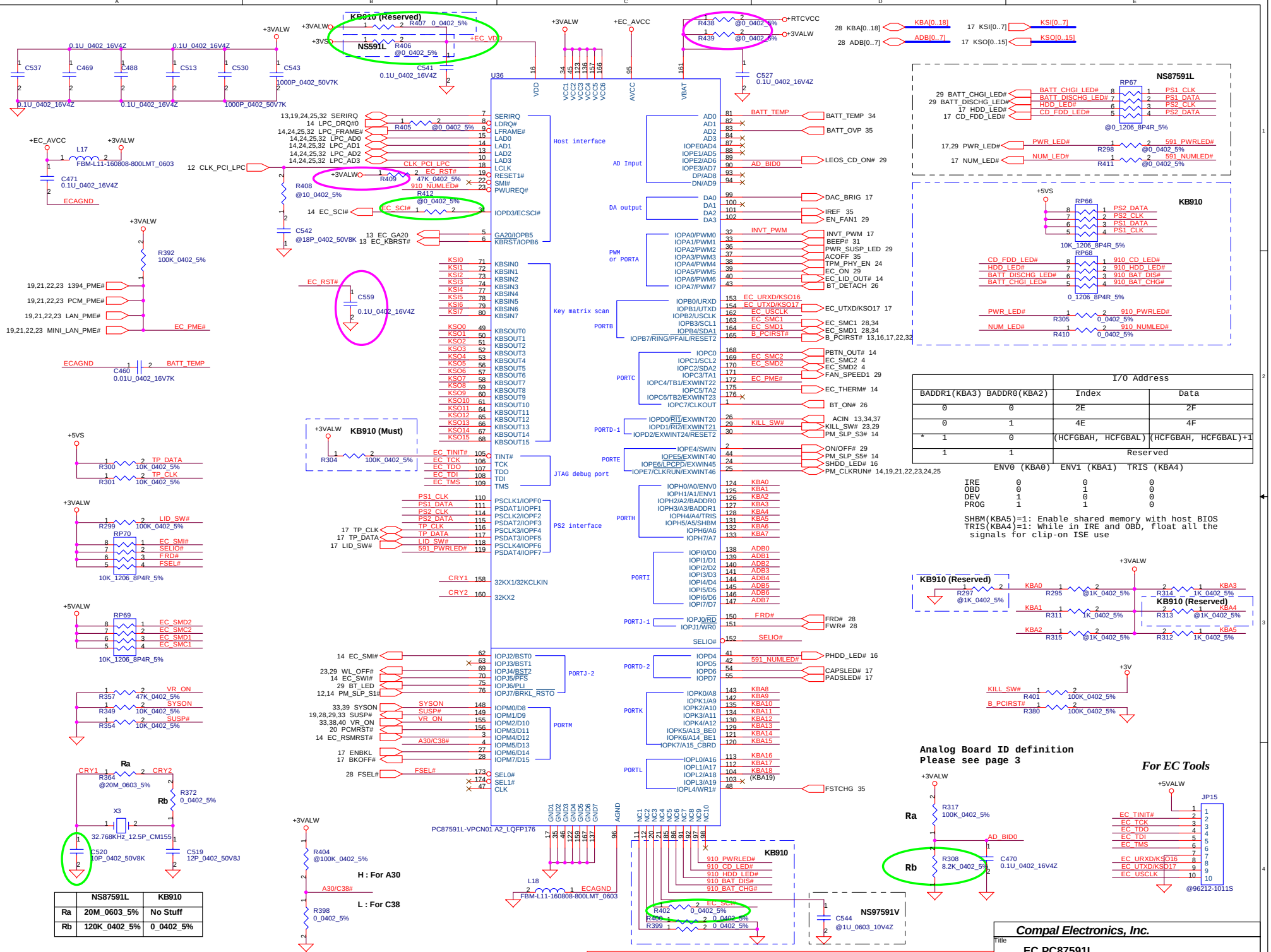

	NS87591L	KB910
Ra	20M_0603_5%	No Stuff
Rb	120K_0402_5%	0_0402_5%

	BADDR1(KBA3)	BADDR0(KBA2)	I/O Address Index	I/O Address Data
	0	0	2E	2F
	0	1	4E	4F
*	1	0	(HCFGBAH, HCFGBAL)	(HCFGBAH, HCFGBAL)+1
	1	1	Reserved	

	ENV0 (KBA0)	ENV1 (KBA1)	TRIS (KBA4)
IRE	0	0	0
OBD	0	1	0
DEV	1	0	0
PROG	1	1	0

SHBM(KBA5)=1: Enable shared memory with host BIOS
TRIS(KBA4)=1: While in IRE and OBD, float all the signals for clip-on ISE use

THIS SHEET OF ENGINEERING DRAWING IS THE PROPRIETARY PROPERTY OF COMPAL ELECTRONICS, INC. AND CONTAINS CONFIDENTIAL AND TRADE SECRET INFORMATION. THIS SHEET MAY NOT BE TRANSFERED FROM THE CUSTODY OF THE COMPETENT DIVISION OF R&D DEPARTMENT EXCEPT AS AUTHORIZED BY COMPAL ELECTRONICS, INC. NEITHER THIS SHEET NOR THE INFORMATION IT CONTAINS MAY BE USED BY OR DISCLOSED TO ANY THIRD PARTY WITHOUT PRIOR WRITTEN CONSENT OF COMPAL ELECTRONICS, INC.

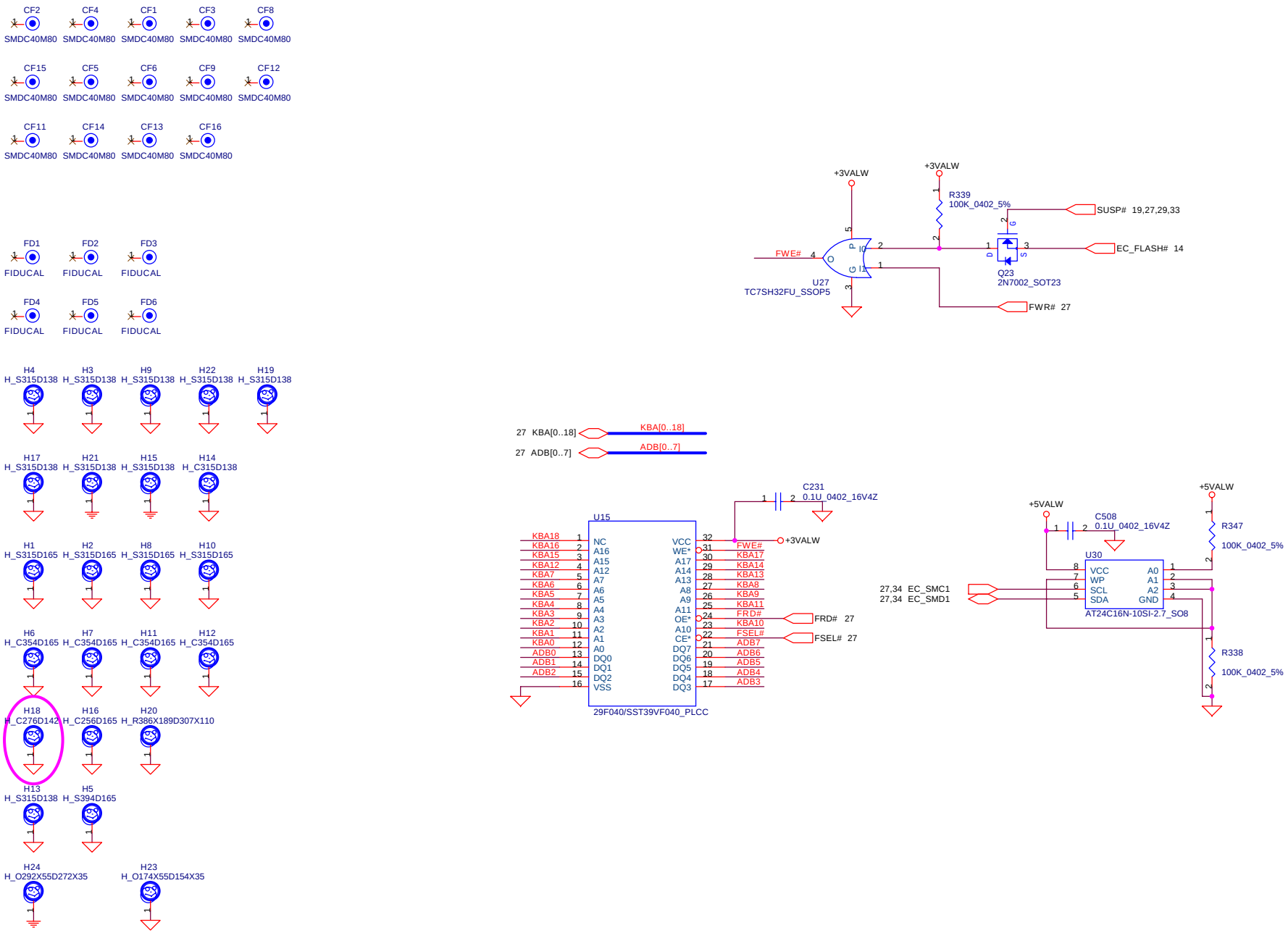

THIS SHEET OF ENGINEERING DRAWING IS THE PROPRIETARY PROPERTY OF COMPAL ELECTRONICS, INC. AND CONTAINS CONFIDENTIAL AND TRADE SECRET INFORMATION. THIS SHEET MAY NOT BE TRANSFERED FROM THE CUSTODY OF THE COMPETENT DIVISION OF R&D DEPARTMENT EXCEPT AS AUTHORIZED BY COMPAL ELECTRONICS, INC. NEITHER THIS SHEET NOR THE INFORMATION IT CONTAINS MAY BE USED BY OR DISCLOSED TO ANY THIRD PARTY WITHOUT PRIOR WRITTEN CONSENT OF COMPAL ELECTRONICS, INC.

Compal Electronics, Inc.

Title: **BIOS & EXT. I/O PORT**

Size: Custom | Document Number: **DAT20 LA-1971** | Rev: 0.3

Date: Friday, September 26, 2003 | Sheet 28 of 42

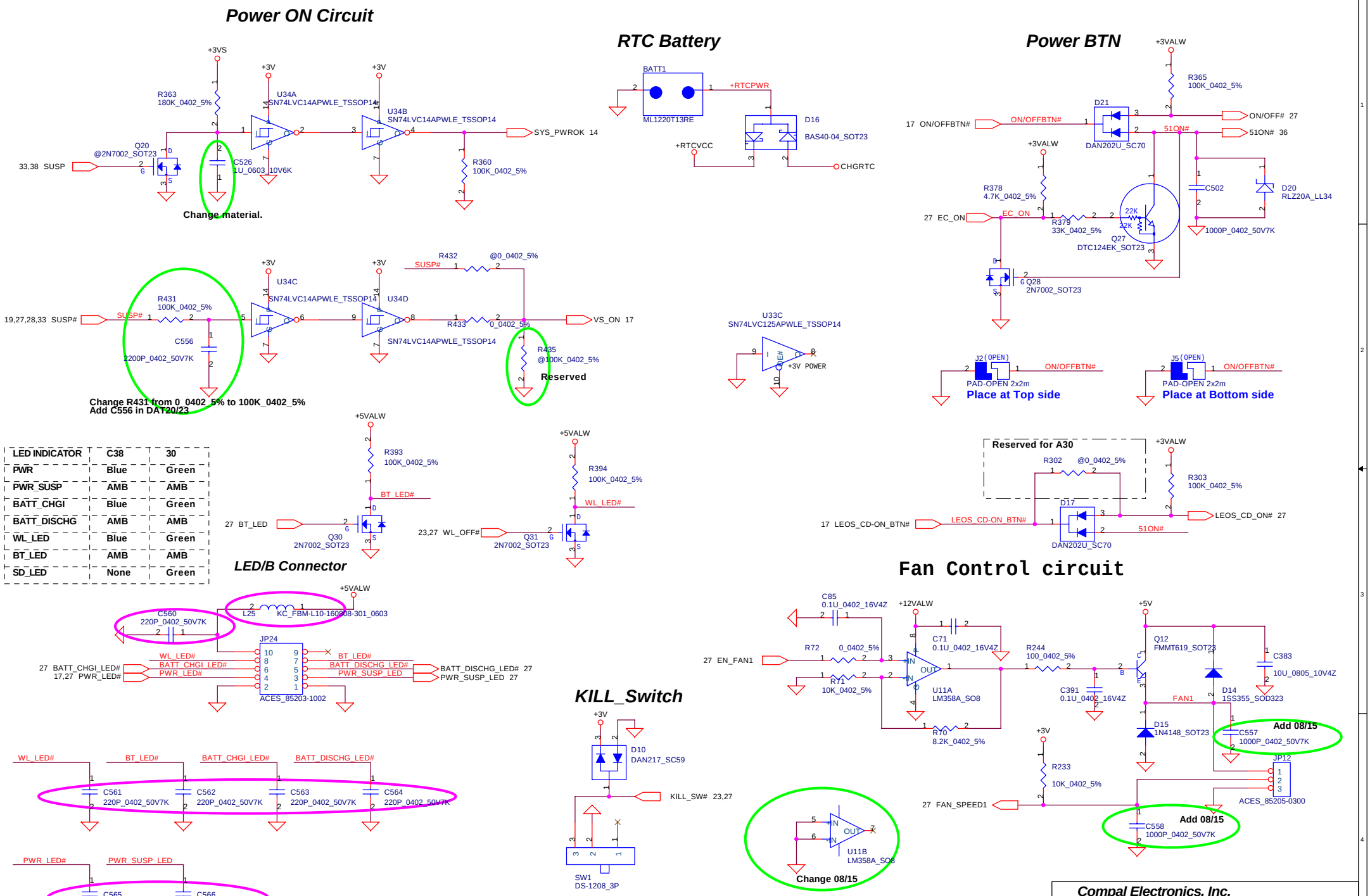

LED INDICATOR	C38	30
PWR	Blue	Green
PWR_SUSP	AMB	AMB
BATT_CHGI	Blue	Green
BATT_CHGI	AMB	AMB
WL_LED	Blue	Green
BT_LED	AMB	AMB
SD_LED	None	Green

THIS SHEET OF ENGINEERING DRAWING IS THE PROPRIETARY PROPERTY OF COMPAL ELECTRONICS, INC. AND CONTAINS CONFIDENTIAL AND TRADE SECRET INFORMATION. THIS SHEET MAY NOT BE TRANSFERED FROM THE CUSTODY OF THE COMPETENT DIVISION OF R&D DEPARTMENT EXCEPT AS AUTHORIZED BY COMPAL ELECTRONICS, INC. NEITHER THIS SHEET NOR THE INFORMATION IT CONTAINS MAY BE USED BY OR DISCLOSED TO ANY THIRD PARTY WITHOUT PRIOR WRITTEN CONSENT OF COMPAL ELECTRONICS, INC.

Compal Electronics, Inc.

Title: Power OK/Reset/RTC battery

Size: Custom | Document Number: DAT20 LA-1971 | Rev: 0.3

Date: Friday, September 26, 2003 | Sheet 29 of 42

AC97 Codec

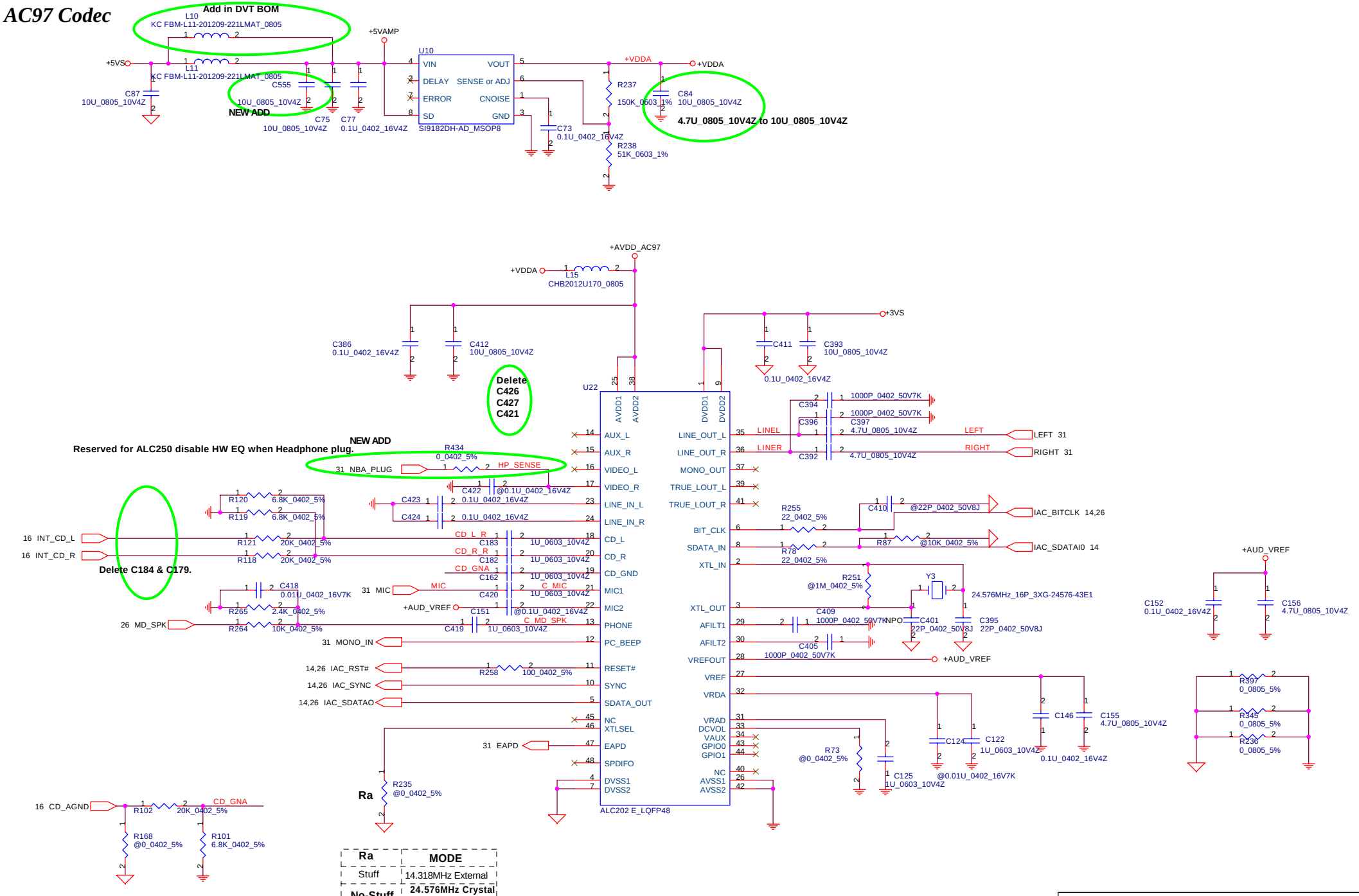

Ra	MODE
Stuff	14.318MHz External
No-Stuff	24.576MHz Crystal or External Colck

THIS SHEET OF ENGINEERING DRAWING IS THE PROPRIETARY PROPERTY OF COMPAL ELECTRONICS, INC. AND CONTAINS CONFIDENTIAL AND TRADE SECRET INFORMATION. THIS SHEET MAY NOT BE TRANSFERED FROM THE CUSTODY OF THE COMPETENT DIVISION OF R&D DEPARTMENT EXCEPT AS AUTHORIZED BY COMPAL ELECTRONICS, INC. NEITHER THIS SHEET NOR THE INFORMATION IT CONTAINS MAY BE USED BY OR DISCLOSED TO ANY THIRD PARTY WITHOUT PRIOR WRITTEN CONSENT OF COMPAL ELECTRONICS, INC.

Compal Electronics, Inc.

Title: **AC97 Codec Realtek ALC202**

Size: Custom | Document Number: **DAT20 LA-1971** | Rev: 0.3

Date: Friday, September 26, 2003 | Sheet 30 of 42

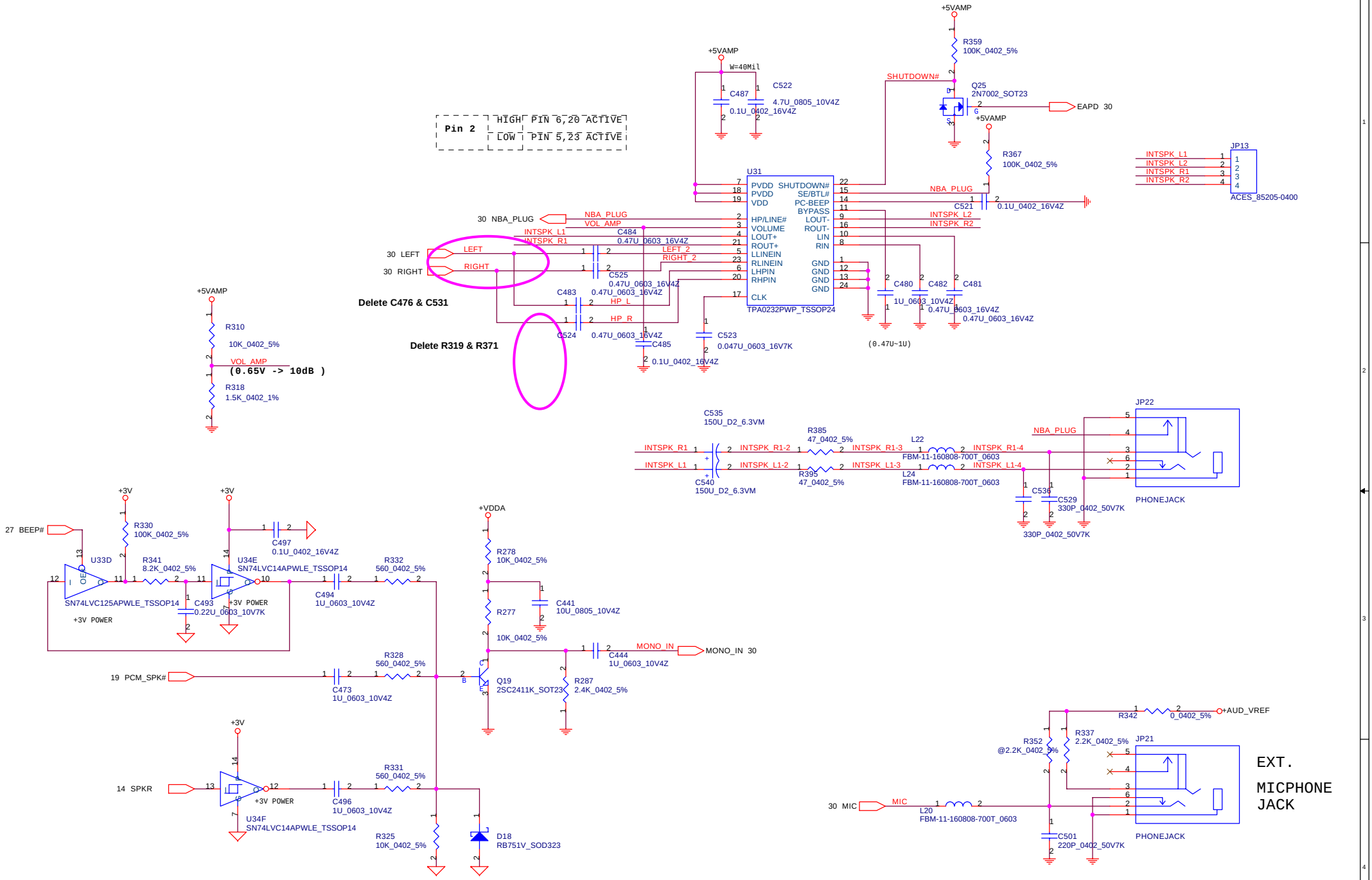

THIS SHEET OF ENGINEERING DRAWING IS THE PROPRIETARY PROPERTY OF COMPAL ELECTRONICS, INC. AND CONTAINS CONFIDENTIAL AND TRADE SECRET INFORMATION. THIS SHEET MAY NOT BE TRANSFERED FROM THE CUSTODY OF THE COMPETENT DIVISION OF R&D DEPARTMENT EXCEPT AS AUTHORIZED BY COMPAL ELECTRONICS, INC. NEITHER THIS SHEET NOR THE INFORMATION IT CONTAINS MAY BE USED BY OR DISCLOSED TO ANY THIRD PARTY WITHOUT PRIOR WRITTEN CONSENT OF COMPAL ELECTRONICS, INC.

Compal Electronics, Inc.

Title: **Power OK/Reset/RTC battery/Lid Switch/Int. KB**

Size: Custom | Document Number: **DAT20 LA-1971** | Rev: 0.3

Date: Friday, September 26, 2003 | Sheet 31 of 42

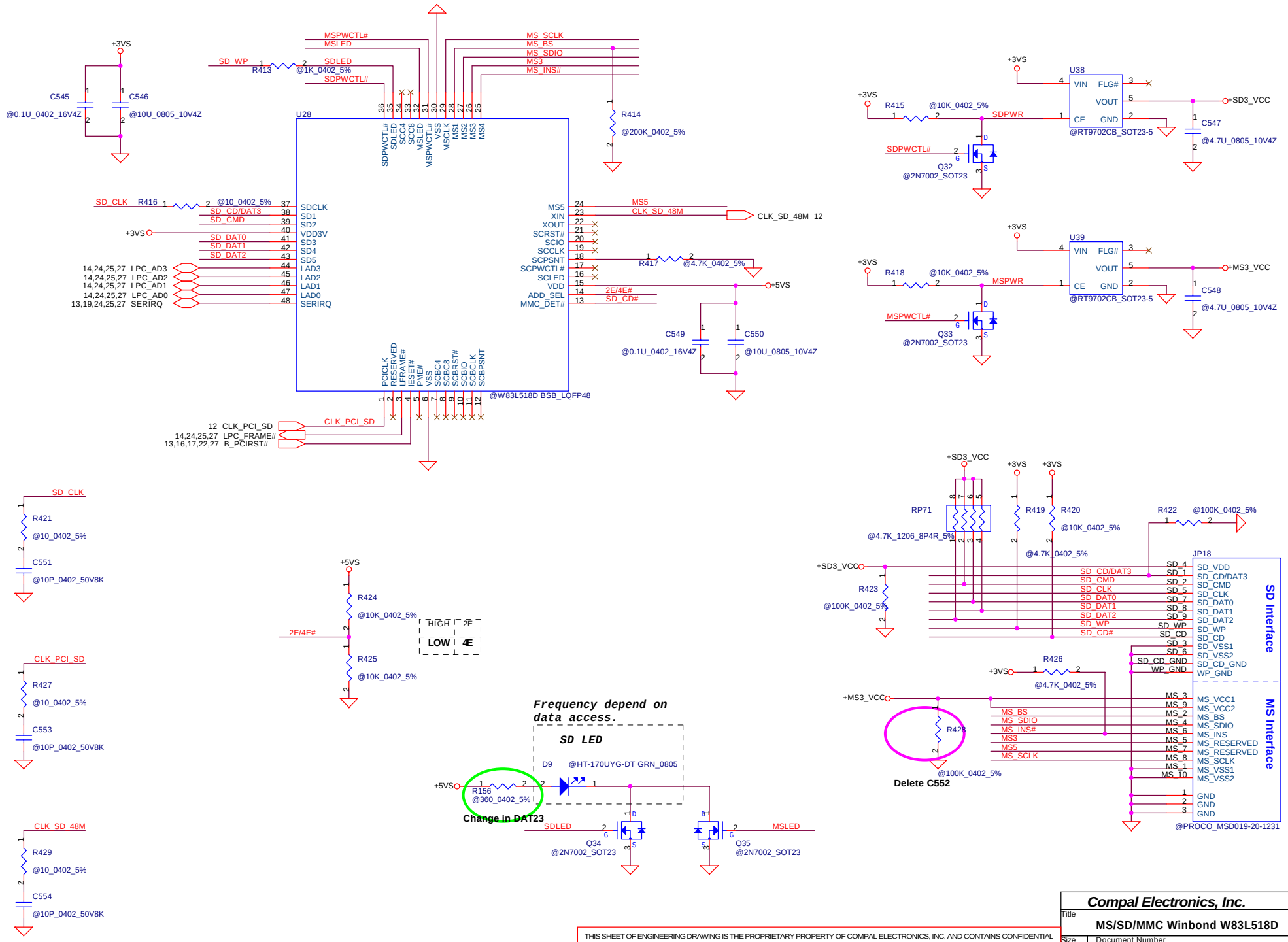

Compal Electronics, Inc.

Title: MS/SD/MMC Winbond W83L518D

Size: Custom | Document Number: DAT20 LA-1971 | Rev: 0.3

Date: Friday, September 26, 2003 | Sheet 32 of 42

THIS SHEET OF ENGINEERING DRAWING IS THE PROPRIETARY PROPERTY OF COMPAL ELECTRONICS, INC. AND CONTAINS CONFIDENTIAL AND TRADE SECRET INFORMATION. THIS SHEET MAY NOT BE TRANSFERED FROM THE CUSTODY OF THE COMPETENT DIVISION OF R&D DEPARTMENT EXCEPT AS AUTHORIZED BY COMPAL ELECTRONICS, INC. NEITHER THIS SHEET NOR THE INFORMATION IT CONTAINS MAY BE USED BY OR DISCLOSED TO ANY THIRD PARTY WITHOUT PRIOR WRITTEN CONSENT OF COMPAL ELECTRONICS, INC.

+5VALW to +5V Transfer

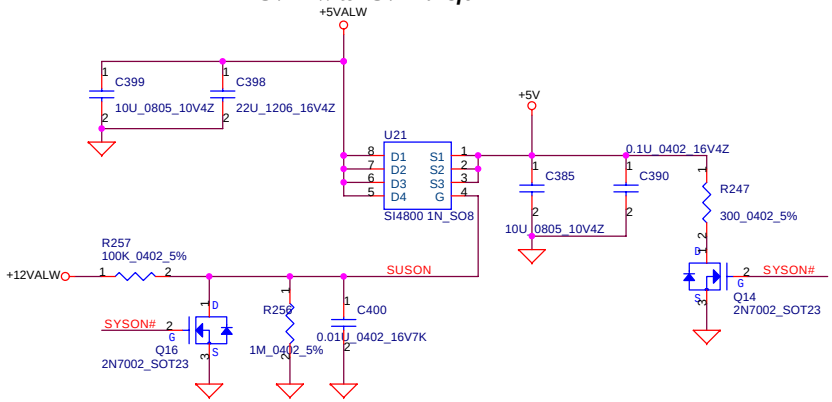

+3VALW to +3V Transfer

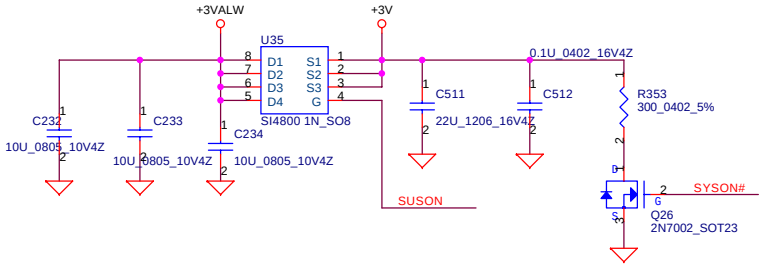

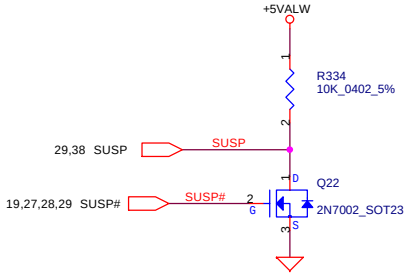

+5VALW to +5VS Transfer

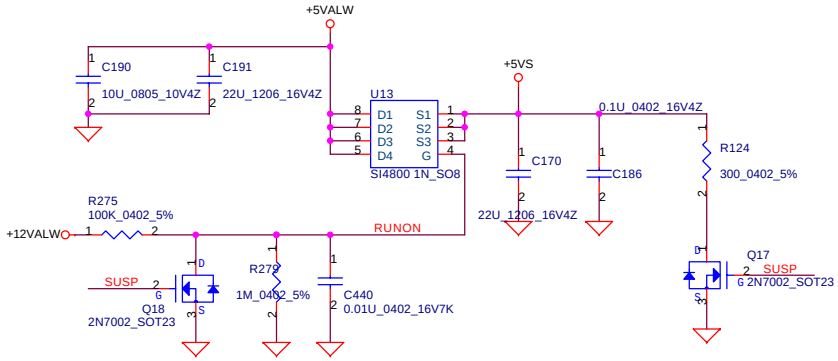

+3VALW to +3VS Transfer

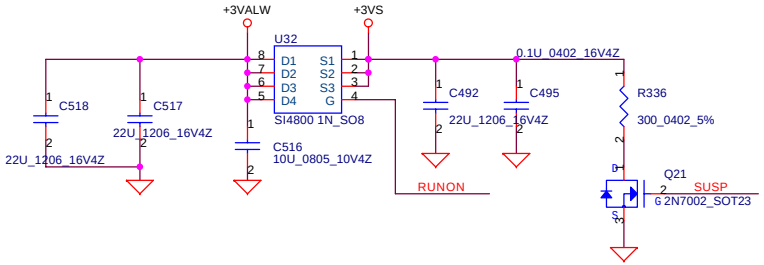

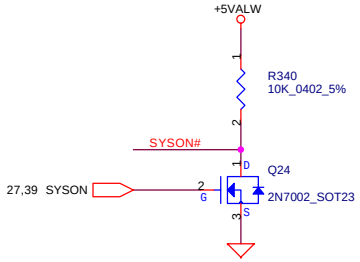

+1.5VALW to +1.5VS Transfer

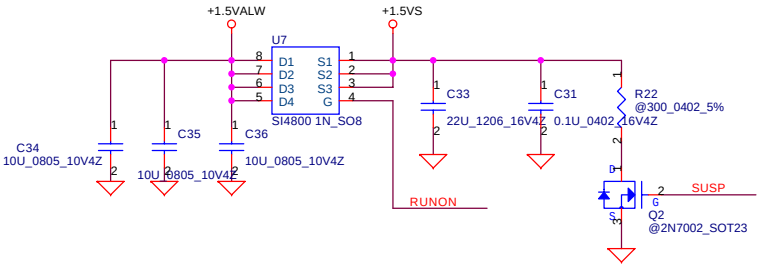

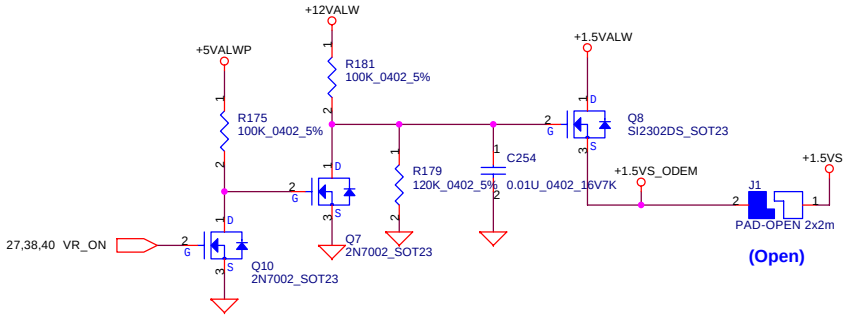

(Open)

THIS SHEET OF ENGINEERING DRAWING IS THE PROPRIETARY PROPERTY OF COMPAL ELECTRONICS, INC. AND CONTAINS CONFIDENTIAL AND TRADE SECRET INFORMATION. THIS SHEET MAY NOT BE TRANSFERED FROM THE CUSTODY OF THE COMPETENT DIVISION OF R&D DEPARTMENT EXCEPT AS AUTHORIZED BY COMPAL ELECTRONICS, INC. NEITHER THIS SHEET NOR THE INFORMATION IT CONTAINS MAY BE USED BY OR DISCLOSED TO ANY THIRD PARTY WITHOUT PRIOR WRITTEN CONSENT OF COMPAL ELECTRONICS, INC.

Compal Electronics, Inc.		
Title: DC/DC Circuit Interface		
Size: Custom	Document Number: DAT20 LA-1971	Rev: 0.3
Date: Friday, September 26, 2003	Sheet 33 of 42	

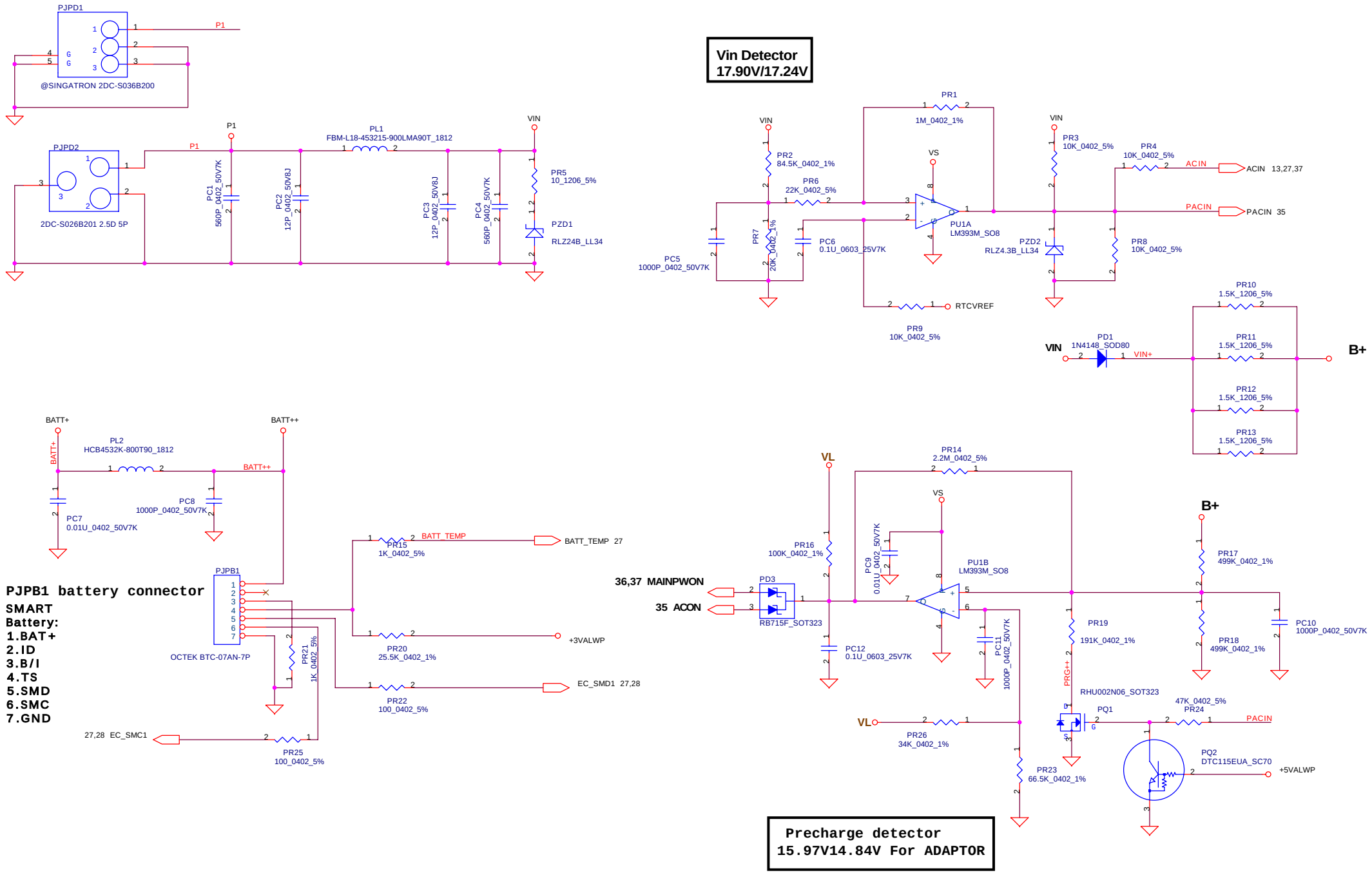

THIS SHEET OF ENGINEERING DRAWING IS THE PROPRIETARY PROPERTY OF COMPAL ELECTRONICS, INC. AND CONTAINS CONFIDENTIAL AND TRADE SECRET INFORMATION. THIS SHEET MAY NOT BE TRANSFERRED FROM THE CUSTODY OF THE COMPETENT DIVISION OF R&D DEPARTMENT EXCEPT AS AUTHORIZED BY COMPAL ELECTRONICS, INC. NEITHER THIS SHEET NOR THE INFORMATION IT CONTAINS MAY BE USED BY OR DISCLOSED TO ANY THIRD PARTY WITHOUT PRIOR WRITTEN CONSENT OF COMPAL ELECTRONICS, INC.

Compal Electronics, Inc.

Title	DCIN & DETECTOR & Precharge
Size	Custom
Document Number	DAT20 LA-1971
Rev	0.3
Date:	Friday, September 26, 2003
Sheet	34 of 42

Charger

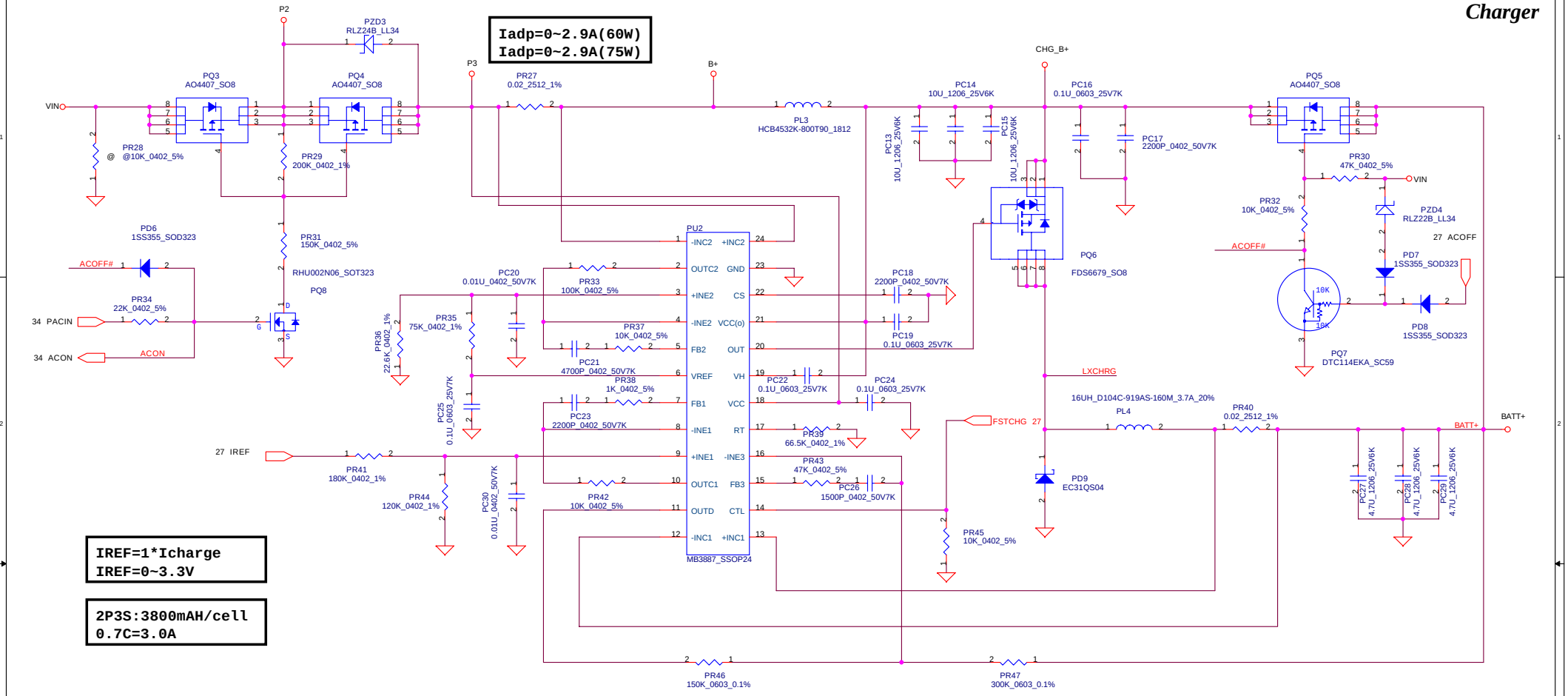

IREF=1*Icharge
IREF=0~3.3V

2P3S:3800mAH/cell
0.7C=3.0A

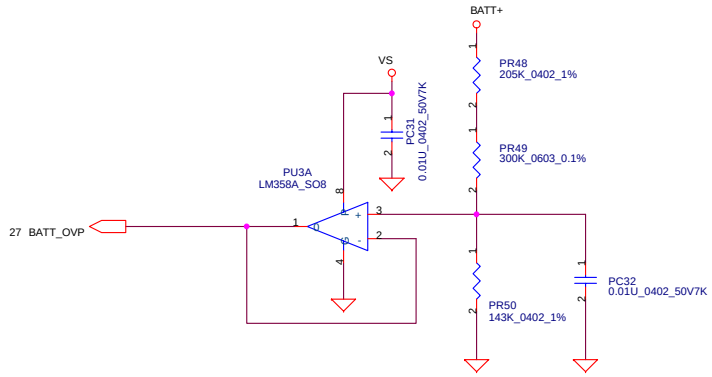

Charge voltage
3S CC-CV MODE : 12.6V

OVP voltage :
LI-3S :12.9V----BATT-OVP=2.84V
BATT-OVP=0.2206*BATT+

PROPRIETARY NOTE THIS SHEET OF ENGINEERING DRAWING IS THE PROPRIETARY PROPERTY OF COMPAL ELECTRONICS, INC. AND CONTAINS CONFIDENTIAL AND TRADE SECRET INFORMATION. THIS SHEET MAY NOT BE TRANSFERRED FROM THE CUSTODY OF THE COMPETENT DIVISION OF R&D DEPARTMENT EXCEPT AS AUTHORIZED BY COMPAL ELECTRONICS, INC. NEITHER THIS SHEET NOR THE INFORMATION IT CONTAINS MAY BE USED BY OR DISCLOSED TO ANY THIRD PARTY WITHOUT PRIOR WRITTEN CONSENT OF COMPAL ELECTRONICS, INC.

Compal Electronics, Inc.
Title: Charger
Size: B
Document Number: DAT20 LA-1971
Rev: 0.3
Date: Friday, September 26, 2003
Sheet 35 of 42

PH1 under CPU botten side :
CPU thermal protection at 85 degree C
Recovery at 44(45) degree C

PH2 near main Battery CONN :
BAT. thermal protection at 78 degree C
Recovery at 39(40) degree C

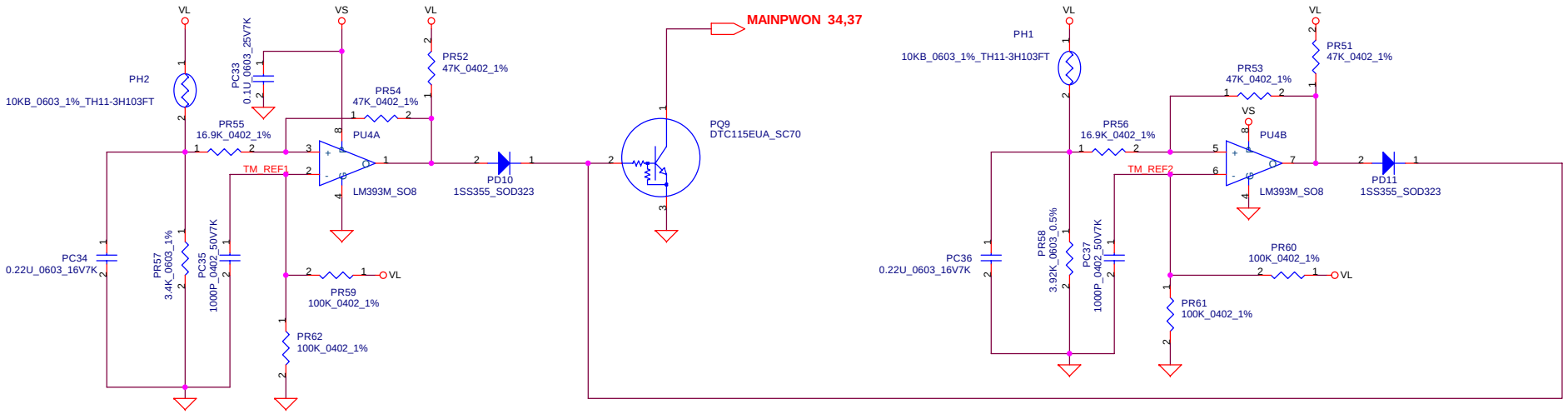

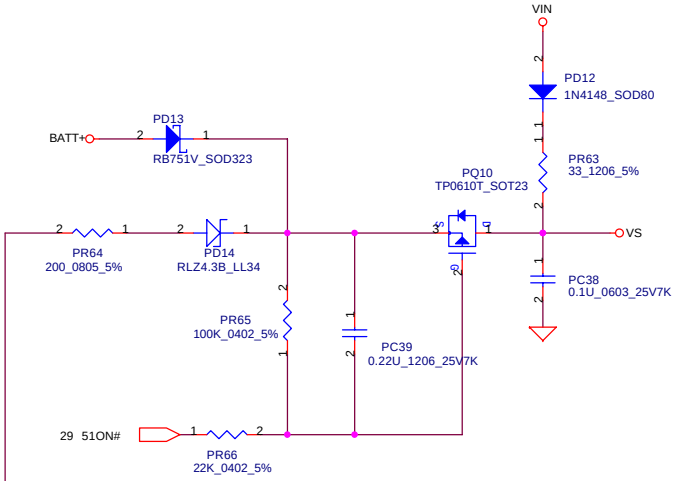

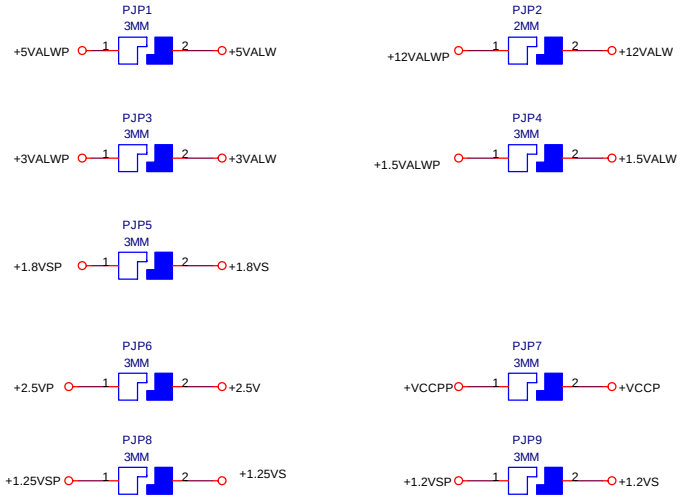

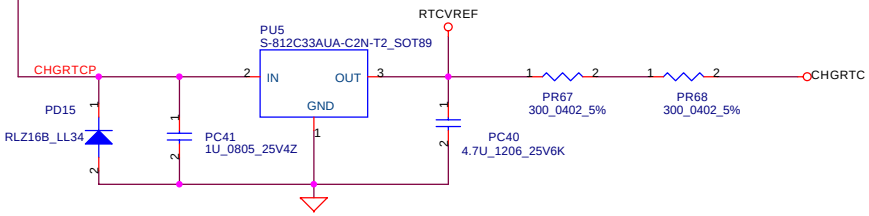

THIS SHEET OF ENGINEERING DRAWING IS THE PROPRIETARY PROPERTY OF COMPAL ELECTRONICS, INC. AND CONTAINS CONFIDENTIAL AND TRADE SECRET INFORMATION. THIS SHEET MAY NOT BE TRANSFERRED FROM THE CUSTODY OF THE COMPETENT DIVISION OF R&D DEPARTMENT EXCEPT AS AUTHORIZED BY COMPAL ELECTRONICS, INC. NEITHER THIS SHEET NOR THE INFORMATION IT CONTAINS MAY BE USED BY OR DISCLOSED TO ANY THIRD PARTY WITHOUT PRIOR WRITTEN CONSENT OF COMPAL ELECTRONICS, INC.

Compal Electronics, Inc.

Title	RTC Battery & OTP	
Size B	Document Number DAT20 LA-1971	Rev 0.3
Date: Friday, September 26, 2003	Sheet 36 of 42	

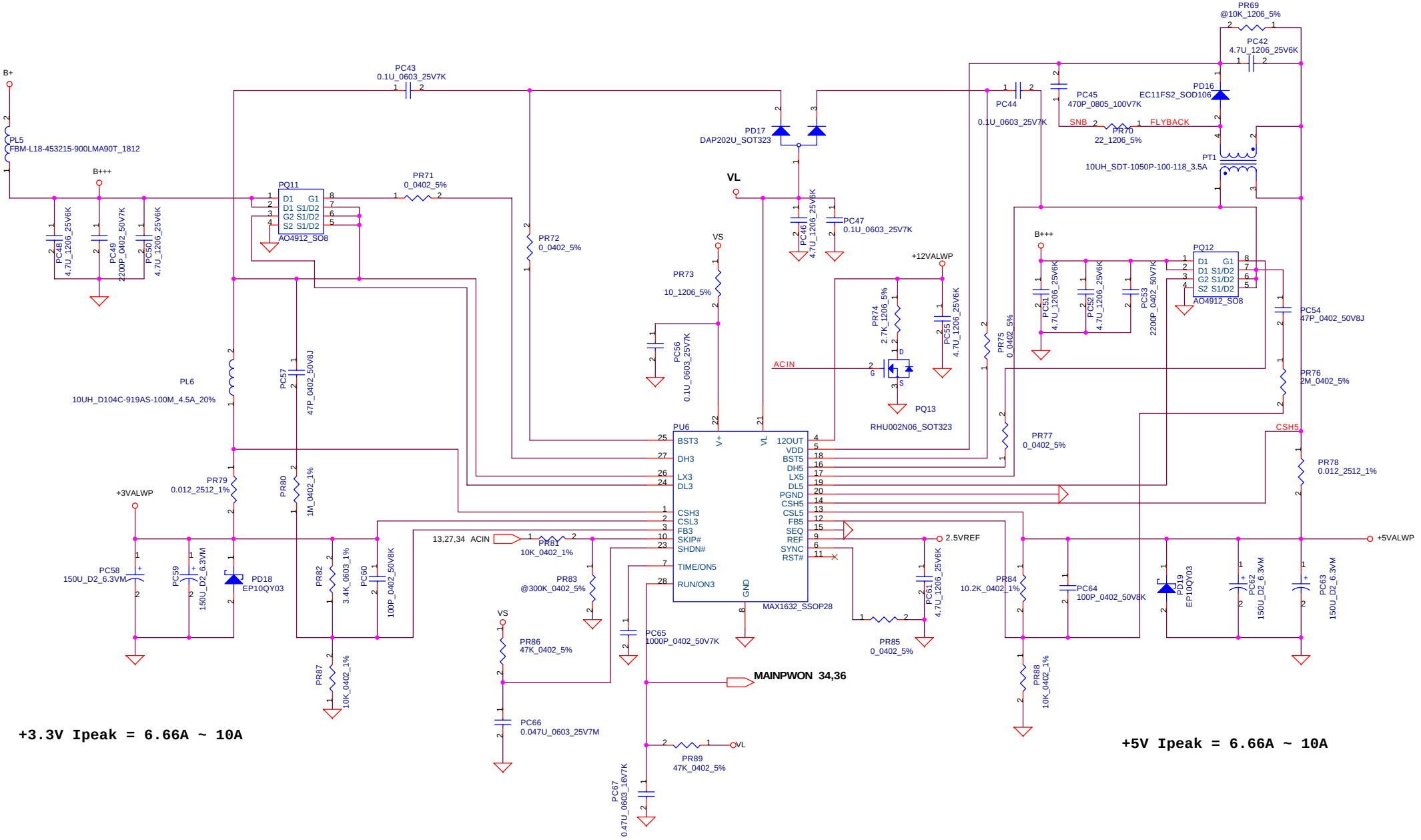

THIS SHEET OF ENGINEERING DRAWING IS THE PROPRIETARY PROPERTY OF COMPAL ELECTRONICS, INC. AND CONTAINS CONFIDENTIAL AND TRADE SECRET INFORMATION. THIS SHEET MAY NOT BE TRANSFERRED FROM THE CUSTODY OF THE COMPETENT DIVISION OF R&D DEPARTMENT EXCEPT AS AUTHORIZED BY COMPAL ELECTRONICS, INC. NEITHER THIS SHEET NOR THE INFORMATION IT CONTAINS MAY BE USED BY OR DISCLOSED TO ANY THIRD PARTY WITHOUT PRIOR WRITTEN CONSENT OF COMPAL ELECTRONICS, INC.

Compal Electronics, Inc.

Title: +5VALWP / +3VALWP / +12VALWP

Size: Custom | Document Number: DAT20 LA-1971 | Rev: 0.3

Date: Friday, September 26, 2003 | Sheet 37 of 42

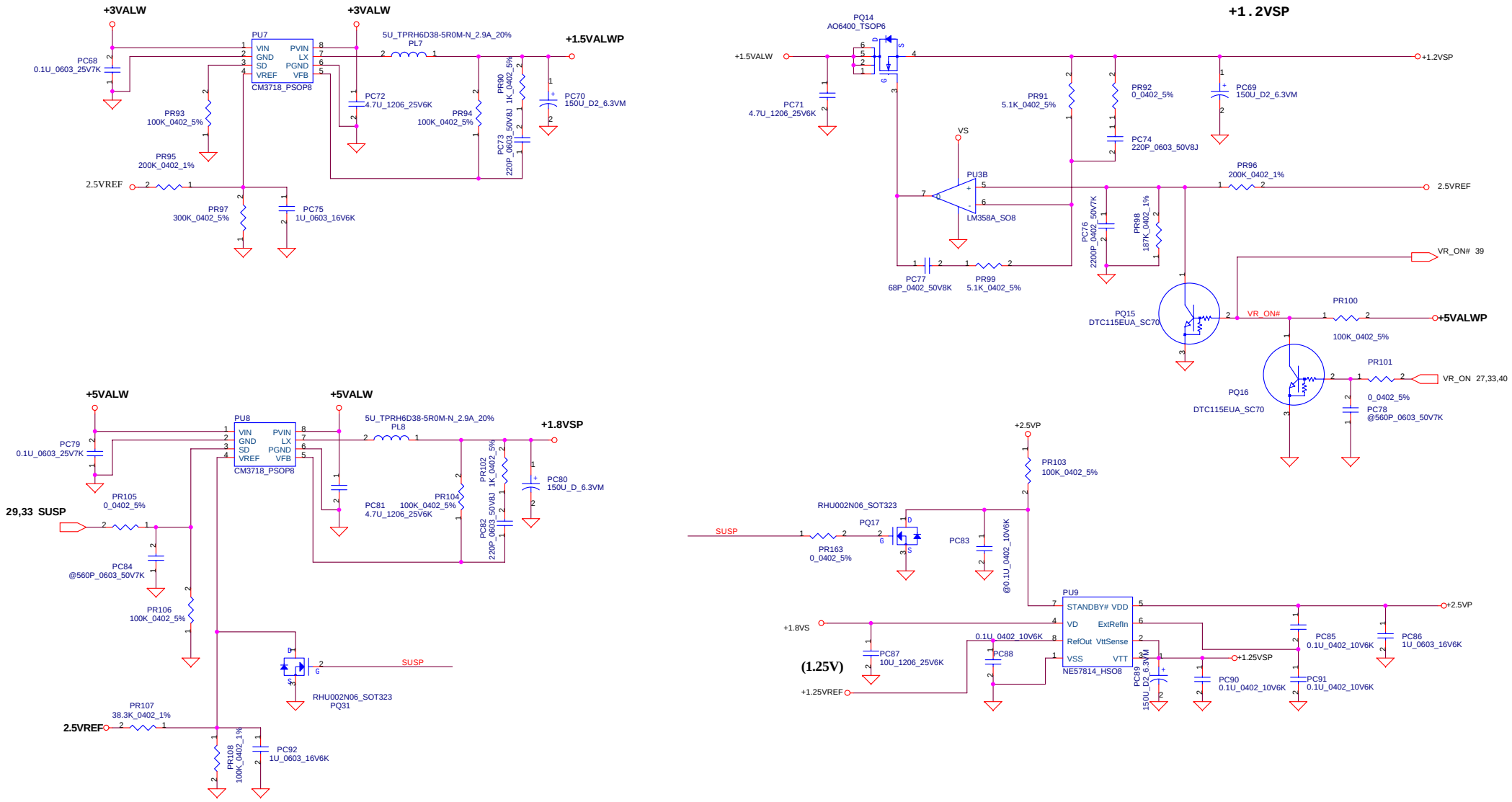

THIS SHEET OF ENGINEERING DRAWING IS THE PROPRIETARY PROPERTY OF COMPAL ELECTRONICS, INC. AND CONTAINS CONFIDENTIAL AND TRADE SECRET INFORMATION. THIS SHEET MAY NOT BE TRANSFERED FROM THE CUSTODY OF THE COMPETENT DIVISION OF R&D DEPARTMENT EXCEPT AS AUTHORIZED BY COMPAL ELECTRONICS, INC. NEITHER THIS SHEET NOR THE INFORMATION IT CONTAINS MAY BE USED BY OR DISCLOSED TO ANY THIRD PARTY WITHOUT PRIOR WRITTEN CONSENT OF COMPAL ELECTRONICS, INC.

Compal Electronics, Inc.

Title: **+1.8VSP & +1.25VSP &1.5VALWP & +1.2VSP**

Size: Custom | Document Number: **DAT20 LA-1971** | Rev: 0.3

Date: Friday, September 26, 2003 | Sheet 38 of 42

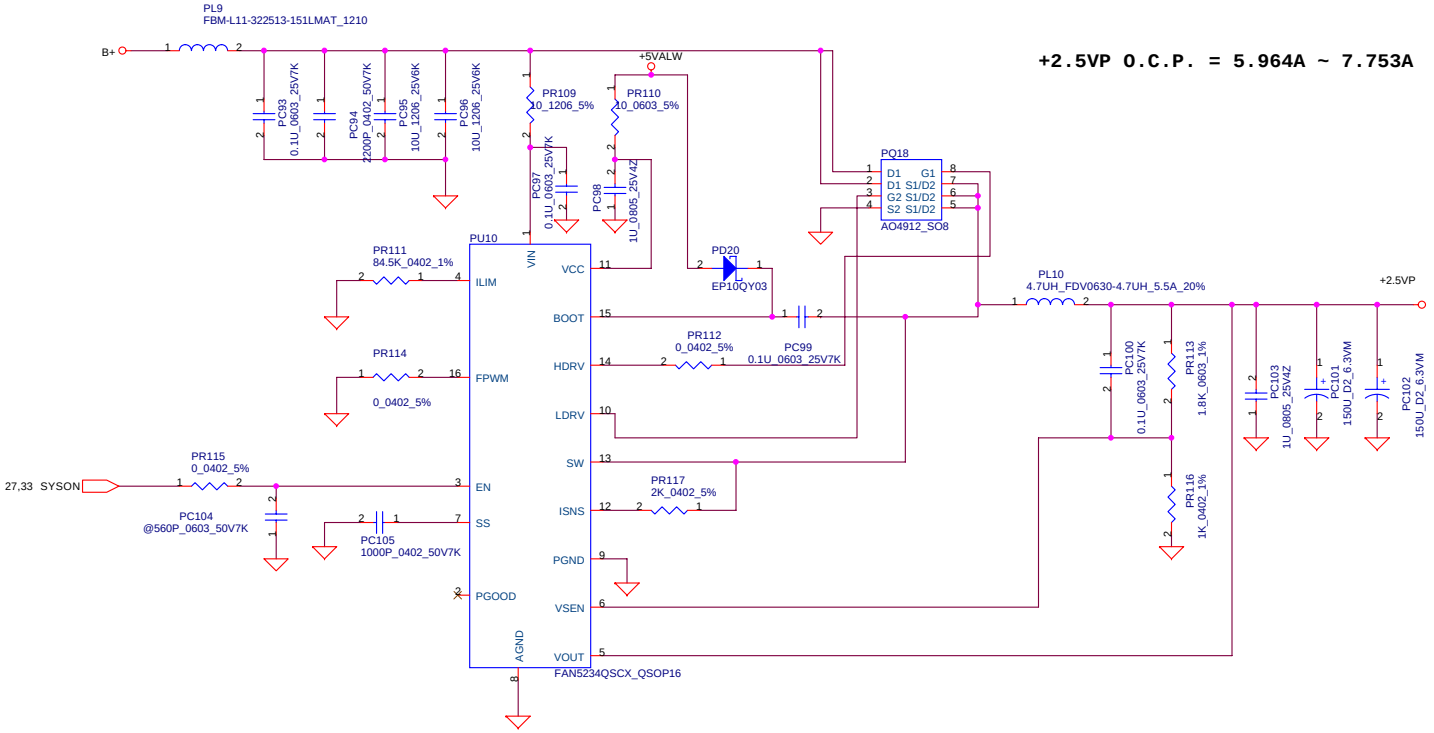

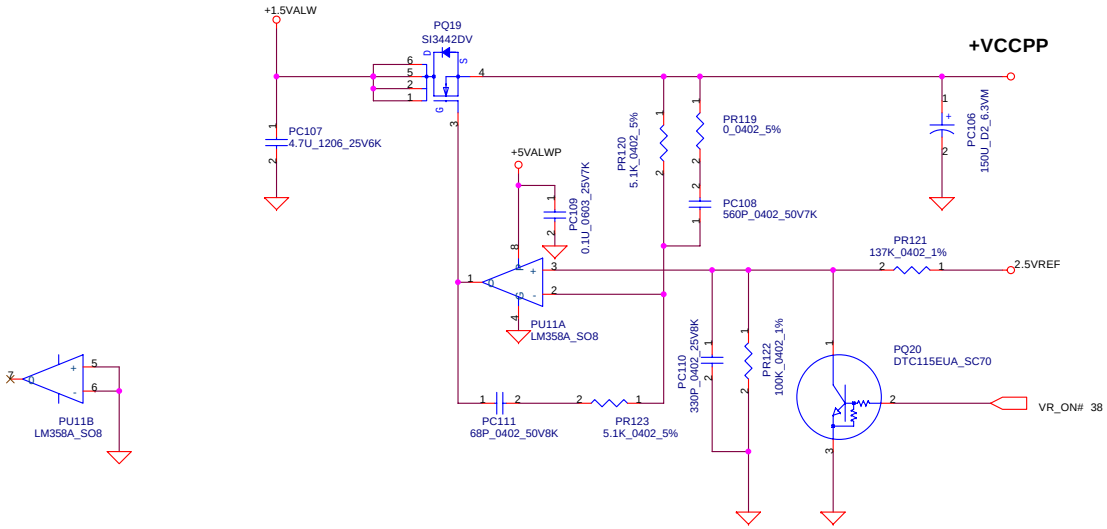

THIS SHEET OF ENGINEERING DRAWING IS THE PROPRIETARY PROPERTY OF COMPAL ELECTRONICS, INC. AND CONTAINS CONFIDENTIAL AND TRADE SECRET INFORMATION. THIS SHEET MAY NOT BE TRANSFERRED FROM THE CUSTODY OF THE COMPETENT DIVISION OF R&D DEPARTMENT EXCEPT AS AUTHORIZED BY COMPAL ELECTRONICS, INC. NEITHER THIS SHEET NOR THE INFORMATION IT CONTAINS MAY BE USED BY OR DISCLOSED TO ANY THIRD PARTY WITHOUT PRIOR WRITTEN CONSENT OF COMPAL ELECTRONICS, INC.

Compal Electronics, Inc.

Title: **DDR +2.5VP & VCCPP**

Size: Custom | Document Number: **DAT20 LA-1971** | Rev: 0.3

Date: Friday, September 26, 2003 | Sheet 39 of 42

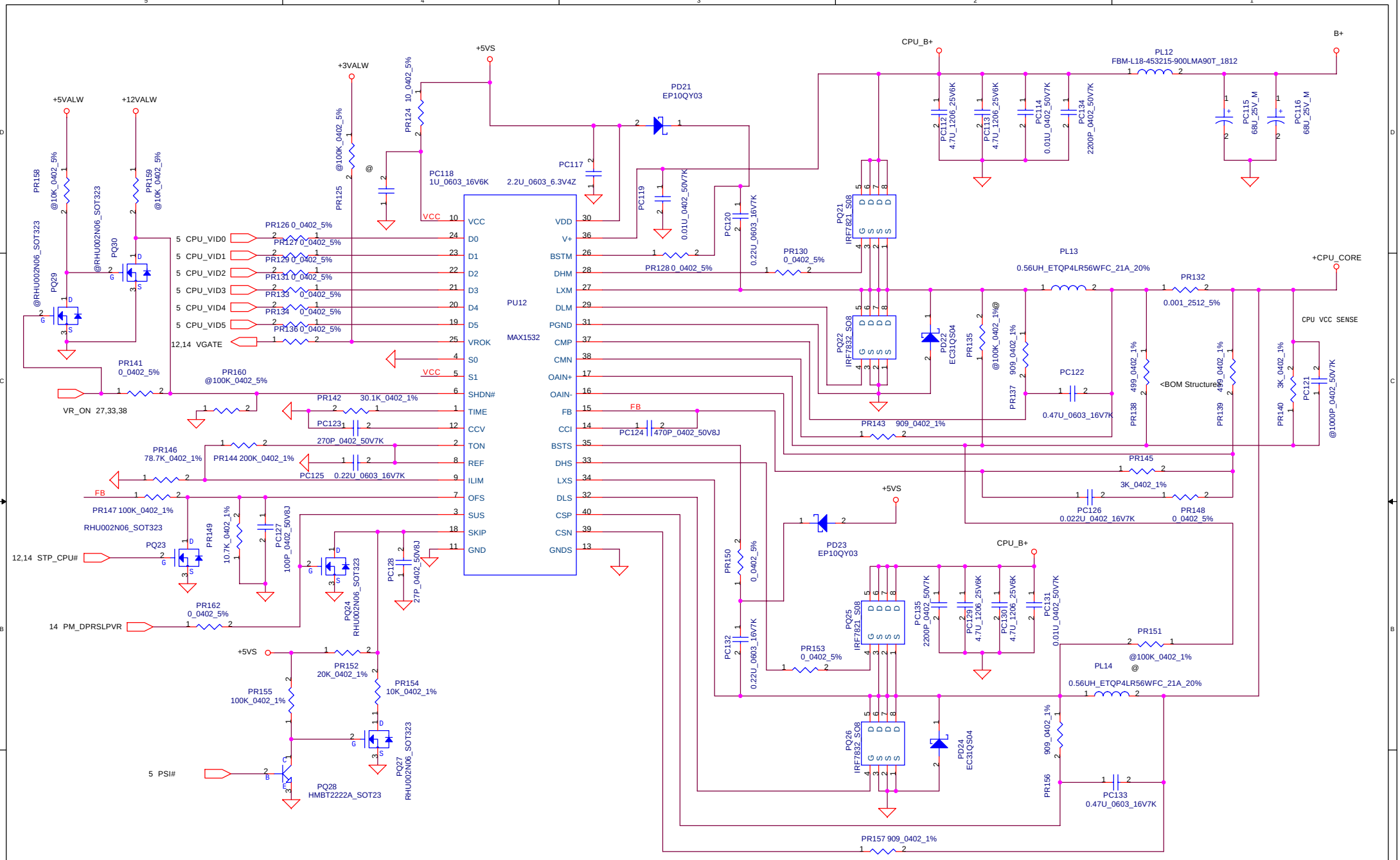

THIS SHEET OF ENGINEERING DRAWING IS THE PROPRIETARY PROPERTY OF COMPAL ELECTRONICS, INC. AND CONTAINS CONFIDENTIAL AND TRADE SECRET INFORMATION. THIS SHEET MAY NOT BE TRANSFERED FROM THE CUSTODY OF THE COMPETENT DIVISION OF R&D DEPARTMENT EXCEPT AS AUTHORIZED BY COMPAL ELECTRONICS, INC. NEITHER THIS SHEET NOR THE INFORMATION IT CONTAINS MAY BE USED BY OR DISCLOSED TO ANY THIRD PARTY WITHOUT PRIOR WRITTEN CONSENT OF COMPAL ELECTRONICS, INC.

Compal Electronics, Inc.

Title	+CPU_CORE	
Size: Custom	Document Number: DAT20 LA-1971	Rev: 0.3
Date: Friday, September 26, 2003	Sheet 40 of 42	

DAT20 PIR LIST

HW PIR LIST

EVT -> DVT

[Page 7 & 9] Change Material R33, R34, R200, R201 (75_0603_1%)

[Page 14] Change Material R38 (20_0603_1%)

[Page 16] Change Material U40

[Page 24] Modify R374 connected from +3VALW to +3V & delete R384 (Remove TPM detect function)

[Page 25] Delete RP65 & R260 which reserved for LPC47N227

[Page 26] Change SLCTIN# connection.

[Page 27] Change R308 from 0_0402_5% to 8.2K_0402_5% for DVT test AD_BID0

[Page 29] Change material for C526 from 1U_0603_10V4Z to 1U_0603_10V6K
Add C556 2200P_0402_50V7K
Add C557, C558 1000P_0402_50V7K

[Page 30] Add L10
Change C84 from 4.7U_0805_10V4Z to 10U_0805_10V4Z
Add C555 10U_0805_10V4Z
Delete C184, C179 1U_0603_10V4Z

[Page 32] R156 from 390_0402_5% to 360_0402_5%

[Page 27] R409 from 10K_0402_5% to 47K_0402_5% & add C559 0.1U_0402_16V4Z

DVT -> PVT

[Page 12] Delete C70, C80, C166, C167, C168

[Page 24] Delete R2 (Reserved for FIR)

[Page 31] Delete C476, C531, R319, R371 AudiooHigh pass filter.

THIS SHEET OF ENGINEERING DRAWING IS THE PROPRIETARY PROPERTY OF COMPAL ELECTRONICS, INC. AND CONTAINS CONFIDENTIAL AND TRADE SECRET INFORMATION. THIS SHEET MAY NOT BE TRANSFERED FROM THE CUSTODY OF THE COMPETENT DIVISION OF R&D DEPARTMENT EXCEPT AS AUTHORIZED BY COMPAL ELECTRONICS, INC. NEITHER THIS SHEET NOR THE INFORMATION IT CONTAINS MAY BE USED BY OR DISCLOSED TO ANY THIRD PARTY WITHOUT PRIOR WRITTEN CONSENT OF COMPAL ELECTRONICS, INC.

Version change list (P.I.R. List)

Item	Fixed Issue	Reason for change	Rev.	PG#	Modify List	B.Ver#	Phase
1	M/B cannot power on.	RC delay time is not enough of Max1632 on3 pin.	0.2	34	1.Change PC67 from 0.047U_0805_10V6K to 0.47U _16V K X7R 0603.	0.2	DVT
2	Layout symbol error.	Layout symbol error.	0.2	37	1.Change PR26 PCB footprint from R_0603 to R_0402.	0.2	DVT
3	Layout symbol error.	Layout symbol error.	0.2	40	1.Change PD22 from EP10QY03 to EP31QS04.	0.2	DVT
4	System cannot re-start and Windows fail when into C4.	The CPU cannot into skip mode,happen the OVP when C4.	0.2	40	Swap the PR154 and PR155.	0.2	DVT
5	Rating not enough.	Rating not enough.	0.2	34	1.Change PC66 from 0.047U_00603_16V7K to 0.047U_00603_25V7M.	0.2	DVT
6.	Rating is not enough.	Surge power rating concerned.	0.2	39	1.Change PR109 from 10_0603 to 10_1206.	0.2	DVT
7.	Change size.	Change size.	0.2		1.Change PR149,PR44,PR48,PR82,PR36,PR107,PR39,PR121, PR140,PR145 and PR146 from 0603 to 0402.	0.2	DVT
8.	Change size.	Change size.	0.2		1.Change PC114,PC131,PC49,PC21,PC53,PC128,PC126,PC124,PC31, PC7 and PC9 from 0603 to 0402.	0.2	DVT
9.	Change size.	Change size.	0.2		1.Change PC56,PC24,0C38,PC100,PC16 and PC19 from 0805 to 0603.	0.2	DVT
10.	Choke rating is not enough.	Charge current power rating concerned.	0.2	35	1.Change PL4 from 22UH to 16UH.	0.2	DVT
11.	Appication of CM3718 has overshoot issue during system on.	Charge control signal SHDN# to reference.	0.2	38	1.Add PQ31.	0.2	DVT
12.	EMI issue of charger.	EMI issue of charger.	0.3	35	1.Change PQ6 from AO4407 to FDS6679. Add the PR164 on GATE pin of PQ6.	0.3	PVT
13.	EMI issue of CPU_CORE.	EMI issue of CPU_CORE.	0.3	40	1.Change PQ21 and PQ25 from IRF7821 to IRF7811A. Add the 2200P on PC134 and PC135.	0.3	PVT
14.							

THIS SHEET OF ENGINEERING DRAWING IS THE PROPRIETARY PROPERTY OF COMPAL ELECTRONICS, INC. AND CONTAINS CONFIDENTIAL AND TRADE SECRET INFORMATION. THIS SHEET MAY NOT BE TRANSFERED FROM THE CUSTODY OF THE COMPETENT DIVISION OF R&D DEPARTMENT EXCEPT AS AUTHORIZED BY COMPAL ELECTRONICS, INC. NEITHER THIS SHEET NOR THE INFORMATION IT CONTAINS MAY BE USED BY OR DISCLOSED TO ANY THIRD PARTY WITHOUT PRIOR WRITTEN CONSENT OF COMPAL ELECTRONICS, INC.