Compal Confidential

ISRAE LA-3711P Schematics Document

Intel Yonah/Merom with 945GM/943GML/940GML+ DDRII + ICH7M

2007-02-02

REV: 1.0

www.laptop-schematics.com

Security Classification	Compal Secret Data		
Issued Date	2006/10/31	Deciphered Date	2009/11/13

THIS SHEET OF ENGINEERING DRAWING IS THE PROPRIETARY PROPERTY OF COMPAL ELECTRONICS, INC. AND CONTAINS CONFIDENTIAL AND TRADE SECRET INFORMATION. THIS SHEET MAY NOT BE TRANSFERED FROM THE CUSTODY OF THE COMPETENT DIVISION OF R&D DEPARTMENT EXCEPT AS AUTHORIZED BY COMPAL ELECTRONICS, INC. NEITHER THIS SHEET NOR THE INFORMATION IT CONTAINS MAY BE USED BY OR DISCLOSED TO ANY THIRD PARTY WITHOUT PRIOR WRITTEN CONSENT OF COMPAL ELECTRONICS, INC.

Compal Electronics, Inc.

Title: Cover Sheet

Size: | Document Number: ISRAE M/B LA-3711P | Rev: 1.0

Date: Thursday, March 22, 2007 | Sheet 1 of 39

Compal confidential

Model : ISRAE

File Name : LA-3711P

NAPA Platform

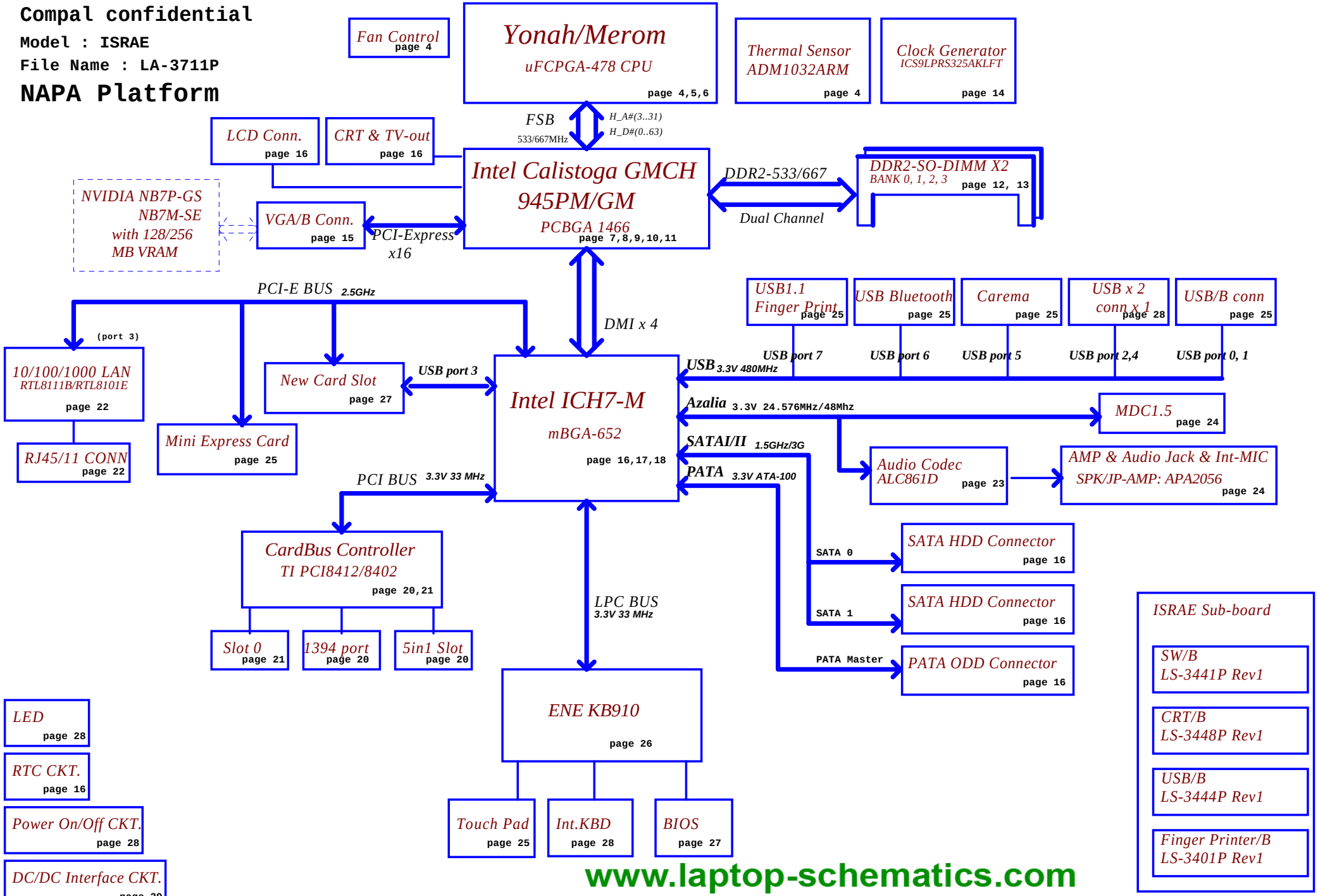

www.laptop-schematics.com

Security Classification	Compal Secret Data		
Issued Date	2006/10/31	Deciphered Date	2009/11/13

THIS SHEET OF ENGINEERING DRAWING IS THE PROPRIETARY PROPERTY OF COMPAL ELECTRONICS, INC. AND CONTAINS CONFIDENTIAL AND TRADE SECRET INFORMATION. THIS SHEET MAY NOT BE TRANSFERED FROM THE CUSTODY OF THE COMPETENT DIVISION OF R&D DEPARTMENT EXCEPT AS AUTHORIZED BY COMPAL ELECTRONICS, INC. NEITHER THIS SHEET NOR THE INFORMATION IT CONTAINS MAY BE USED BY OR DISCLOSED TO ANY THIRD PARTY WITHOUT PRIOR WRITTEN CONSENT OF COMPAL ELECTRONICS, INC.

Compal Electronics, Inc.

Title: Block Diagram

Size | Document Number: ISRAE M/B LA-3711P | Rev 1.0

Date: Thursday, March 22, 2007 | Sheet 2 of 39

Voltage Rails

Power Plane	Description	S1	S3	S5
VIN	Adapter power supply (19V)	N/A	N/A	N/A
B+	AC or battery power rail for power circuit.	N/A	N/A	N/A
+CPU_CORE	Core voltage for CPU	ON	OFF	OFF
+0.9VS	0.9V switched power rail for DDR terminator	ON	OFF	OFF
+VCCP	1.05V switched power rail	ON	OFF	OFF
+1.5VS	1.5V switched power rail	ON	OFF	OFF
+1.8V	1.8V power rail for DDR	ON	ON	OFF
+1.8VS	1.8V switched power rail	ON	OFF	OFF
+2.5VS	2.5V switched power rail	ON	OFF	OFF
+3VALW	3.3V always on power rail	ON	ON	ON*
+3VS	3.3V switched power rail	ON	OFF	OFF
+5VALW	5V always on power rail	ON	ON	ON*
+5VS	5V switched power rail	ON	OFF	OFF
+VSB	+VSB always on power rail	ON	ON	ON*
+RTCVCC	RTC power	ON	ON	ON

Note : ON* means that this power plane is ON only with AC power available, otherwise it is OFF.

External PCI Devices

DEVICE	PCI Device ID	IDSEL #	REQ/GNT #	PIRQ
1394	D0	AD20	2	A,B,C
CARD BUS	D4	AD20	2	A,B,C
5IN1	D4	AD20	2	A,B,C

KB910 I2C / SMBUS ADDRESSING

DEVICE	HEX	ADDRESS
SM1 24C16	A0H	1 0 1 0 0 0 0 X b
SM1 SMART BATTERY	16H	0 0 0 1 0 1 1 X b
SM2 ADM0132 CPU THERMAL MONITOR	98H	1 0 0 1 1 0 0 X b

ICH7-M SM Bus address

DEVICE	HEX	ADDRESS
DDR SO-DIMM 0	A0	1 0 1 0 0 0 0 0
DDR SO-DIMM 1	A4	1 0 1 0 0 1 0 0
CLOCK GENERATOR (EXT.)	D2	1 1 0 1 0 0 1 0

Board ID / SKU ID Table for AD channel

Vcc	3.3V +/- 5%
Ra	100K +/- 5%

Board ID	Rb	V_{AD_BID} min	V_{AD_BID} typ	V_{AD_BID} max
0	0	0 V	0 V	0 V
1	8.2K +/- 5%	0.216 V	0.250 V	0.289 V
2	18K +/- 5%	0.436 V	0.503 V	0.538 V
3	33K +/- 5%	0.712 V	0.819 V	0.875 V
4	56K +/- 5%	1.036 V	1.185 V	1.264 V
5	100K +/- 5%	1.453 V	1.650 V	1.759 V
6	200K +/- 5%	1.935 V	2.200 V	2.341 V
7	NC	2.500 V	3.300 V	3.300 V

BOARD ID Table

Board ID	PCB Revision
0	0.1
1	
2	
3	
4	
5	
6	
7	

SKU ID Table

SKU ID	SKU
0	10 (10E)(10M)
1	10C
2	10G(10MG)
3	10GC
4	10J(10EJ) (10MJ)
5	10CJ
6	10G(10MG)J
7	10GC(10MGC)J

BTO Option Table

BTO Item	BOM Structure
45 level	45@
2ND HDD	2HDD@
LAN	100M@/1000M@
WLAN	KS@
MDC	MDC@
Blue tooth	BT@
Card ctrller	8412@/8402@/4512@
FINGER PRINT	FP@
5IN1	5IN1@, NON5IN1@
Express card	NEWCARD@
PCMCIA	PCMCIA@
Carema+MIC	CAREMA@
VGA FAN	FAN2@
CHIPSET (R3)	GMLR3@,GM@,ICH7R3@
change R3 to R1 for FRU	GMR3@,GM@,ICH7R3@ PMR3@,PM@,ICH7R3@
CIR	CIR@
Energy Star	ENG@

www.laptop-schematics.com

Security Classification	Compal Secret Data		Compal Electronics, Inc.
Issued Date	2006/10/31	Deciphered Date 2009/11/13	Title: Notes
			Size: Document Number: ISRAE M/B LA-3711P Rev 1.0
			Date: Thursday, March 22, 2007 Sheet 3 of 39

THIS SHEET OF ENGINEERING DRAWING IS THE PROPRIETARY PROPERTY OF COMPAL ELECTRONICS, INC. AND CONTAINS CONFIDENTIAL AND TRADE SECRET INFORMATION. THIS SHEET MAY NOT BE TRANSFERED FROM THE CUSTODY OF THE COMPETENT DIVISION OF R&D DEPARTMENT EXCEPT AS AUTHORIZED BY COMPAL ELECTRONICS, INC. NEITHER THIS SHEET NOR THE INFORMATION IT CONTAINS MAY BE USED BY OR DISCLOSED TO ANY THIRD PARTY WITHOUT PRIOR WRITTEN CONSENT OF COMPAL ELECTRONICS, INC.

Thermal Sensor ADM1032ARM

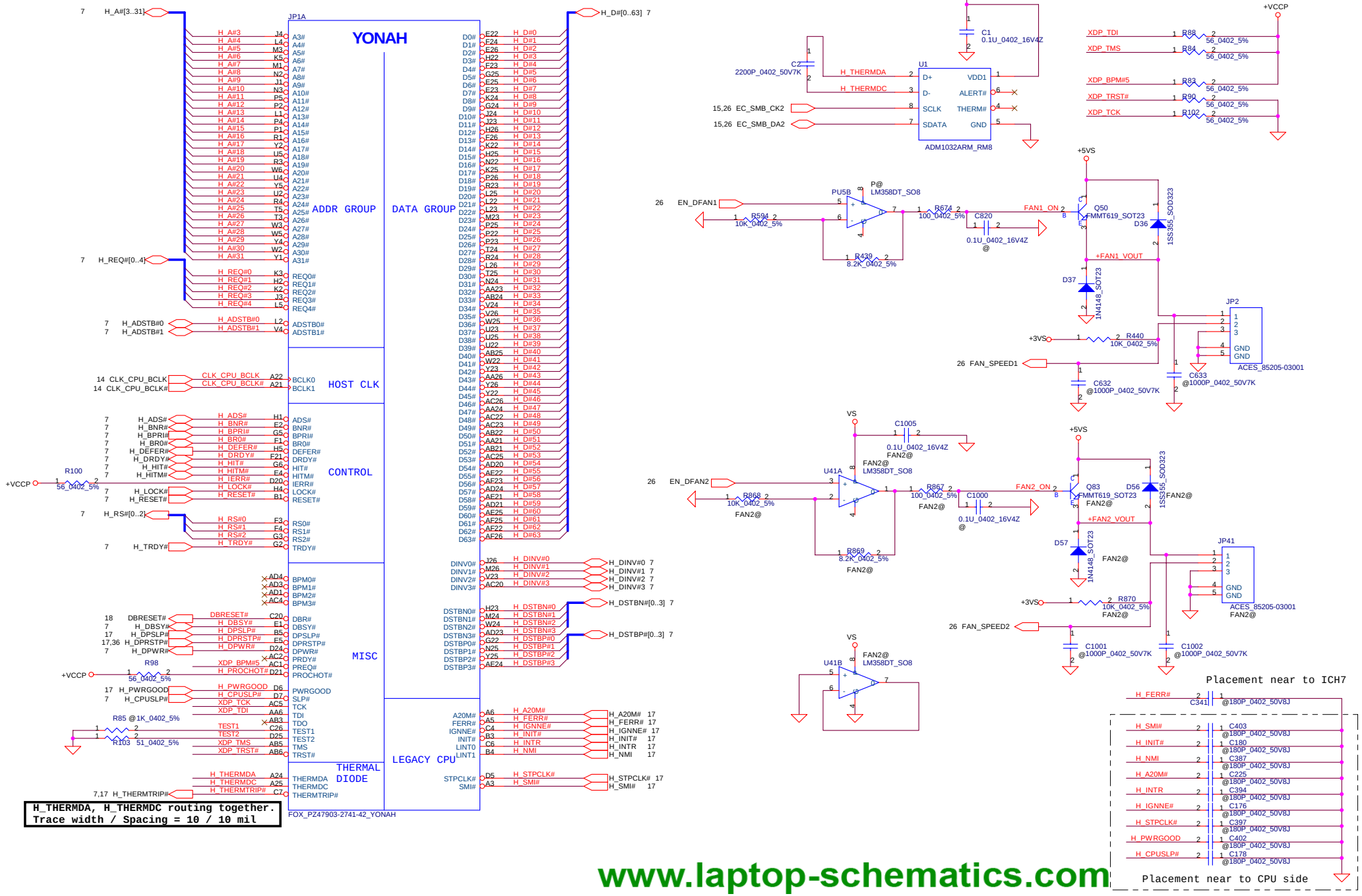

www.laptop-schematics.com

Security Classification	Compal Secret Data		
Issued Date	2006/10/31	Deciphered Date	2009/11/13

THIS SHEET OF ENGINEERING DRAWING IS THE PROPRIETARY PROPERTY OF COMPAL ELECTRONICS, INC. AND CONTAINS CONFIDENTIAL AND TRADE SECRET INFORMATION. THIS SHEET MAY NOT BE TRANSFERED FROM THE CUSTODY OF THE COMPETENT DIVISION OF R&D DEPARTMENT EXCEPT AS AUTHORIZED BY COMPAL ELECTRONICS, INC. NEITHER THIS SHEET NOR THE INFORMATION IT CONTAINS MAY BE USED BY OR DISCLOSED TO ANY THIRD PARTY WITHOUT PRIOR WRITTEN CONSENT OF COMPAL ELECTRONICS, INC.

Compal Electronics, Inc.

Title: **Yonah CPU in mFCPGA479**

Size | Document Number: **ISRAE M/B LA-3711P** | Rev 1.0

Date: Thursday, March 22, 2007 | Sheet 4 of 39

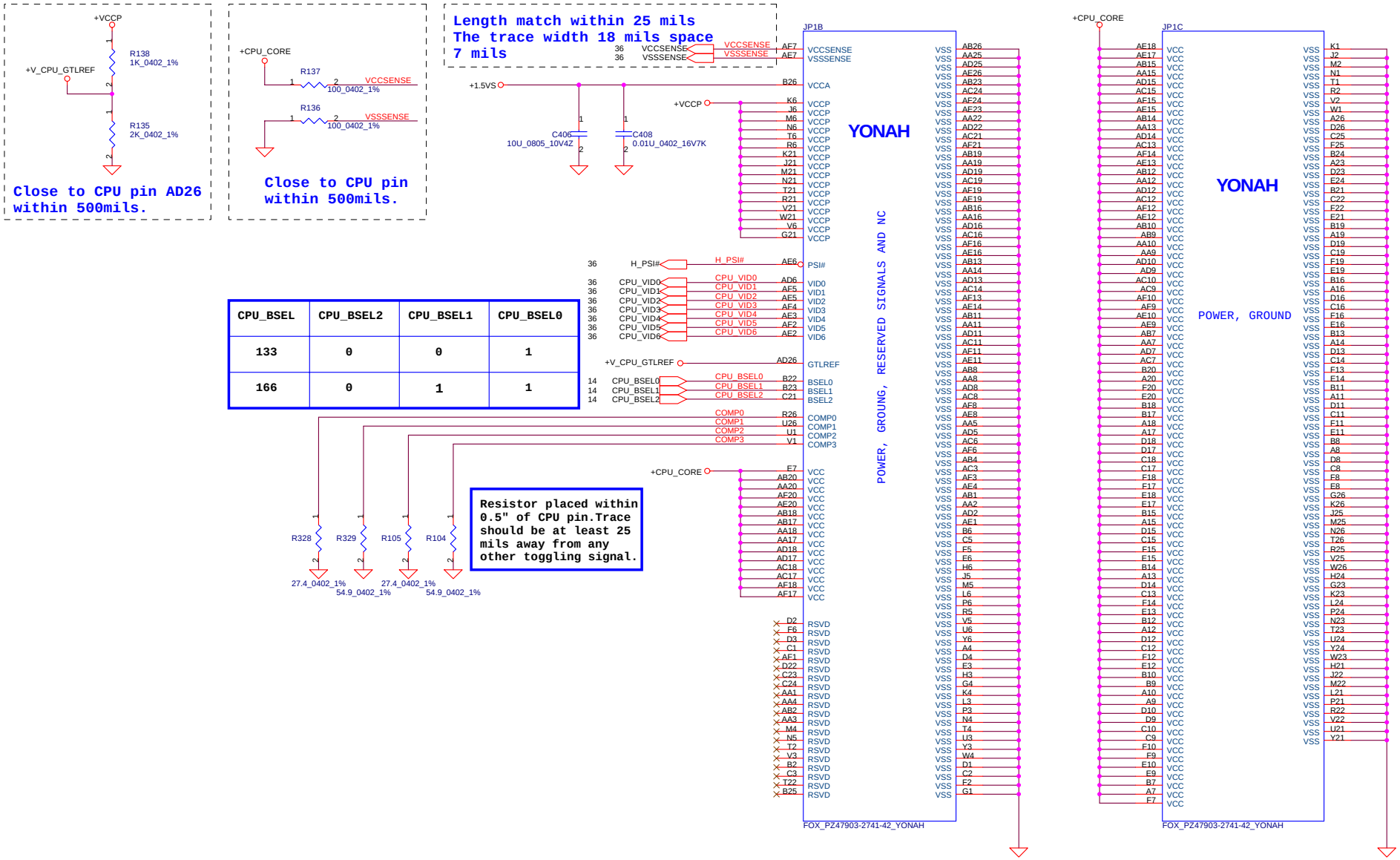

CPU_BSEL	CPU_BSEL2	CPU_BSEL1	CPU_BSEL0
133	0	0	1
166	0	1	1

www.laptop-schematics.com

Security Classification	Compal Secret Data		
Issued Date	2006/10/31	Deciphered Date	2009/11/13

THIS SHEET OF ENGINEERING DRAWING IS THE PROPRIETARY PROPERTY OF COMPAL ELECTRONICS, INC. AND CONTAINS CONFIDENTIAL AND TRADE SECRET INFORMATION. THIS SHEET MAY NOT BE TRANSFERED FROM THE CUSTODY OF THE COMPETENT DIVISION OF R&D DEPARTMENT EXCEPT AS AUTHORIZED BY COMPAL ELECTRONICS, INC. NEITHER THIS SHEET NOR THE INFORMATION IT CONTAINS MAY BE USED BY OR DISCLOSED TO ANY THIRD PARTY WITHOUT PRIOR WRITTEN CONSENT OF COMPAL ELECTRONICS, INC.

Compal Electronics, Inc.

Title: Yonah CPU in mFCPGA479

Size: | Document Number: ISRAE M/B LA-3711P | Rev 1.0

Date: Thursday, March 22, 2007 | Sheet 5 of 39

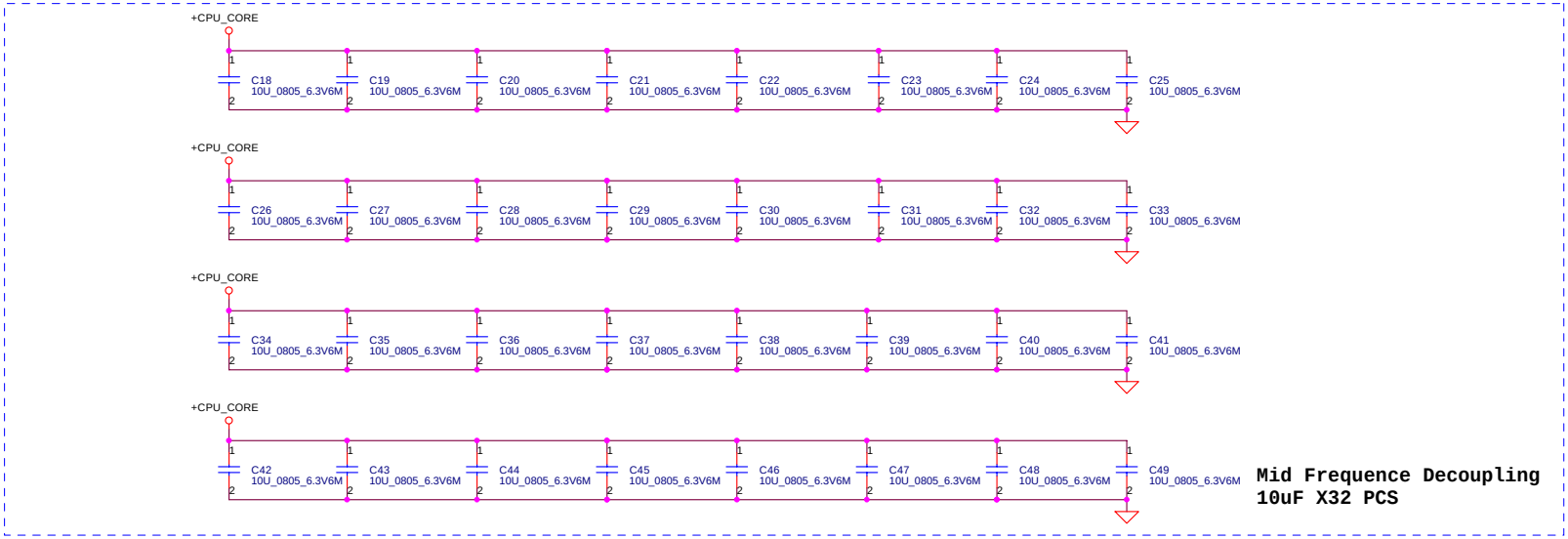

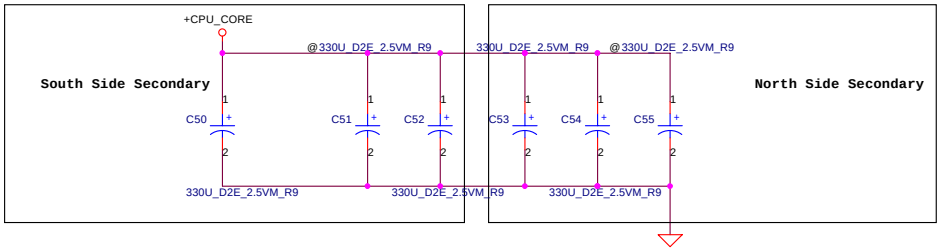

ESR <= 1.5m ohm
Capacitor > 1980uF

330uF ESR 9m ohm X 6 PCS

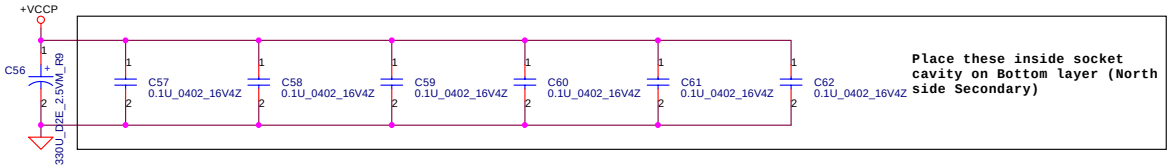

www.laptop-schematics.com

Security Classification	Compal Secret Data		
Issued Date	2006/10/31	Deciphered Date	2009/11/13

THIS SHEET OF ENGINEERING DRAWING IS THE PROPRIETARY PROPERTY OF COMPAL ELECTRONICS, INC. AND CONTAINS CONFIDENTIAL AND TRADE SECRET INFORMATION. THIS SHEET MAY NOT BE TRANSFERED FROM THE CUSTODY OF THE COMPETENT DIVISION OF R&D DEPARTMENT EXCEPT AS AUTHORIZED BY COMPAL ELECTRONICS, INC. NEITHER THIS SHEET NOR THE INFORMATION IT CONTAINS MAY BE USED BY OR DISCLOSED TO ANY THIRD PARTY WITHOUT PRIOR WRITTEN CONSENT OF COMPAL ELECTRONICS, INC.

Compal Electronics, Inc.

Title: *CPU Bypass capacitors*

Size | Document Number: *ISRAE M/B LA-3711P* | Rev 1.0

Date: Thursday, March 22, 2007 | Sheet 6 of 39

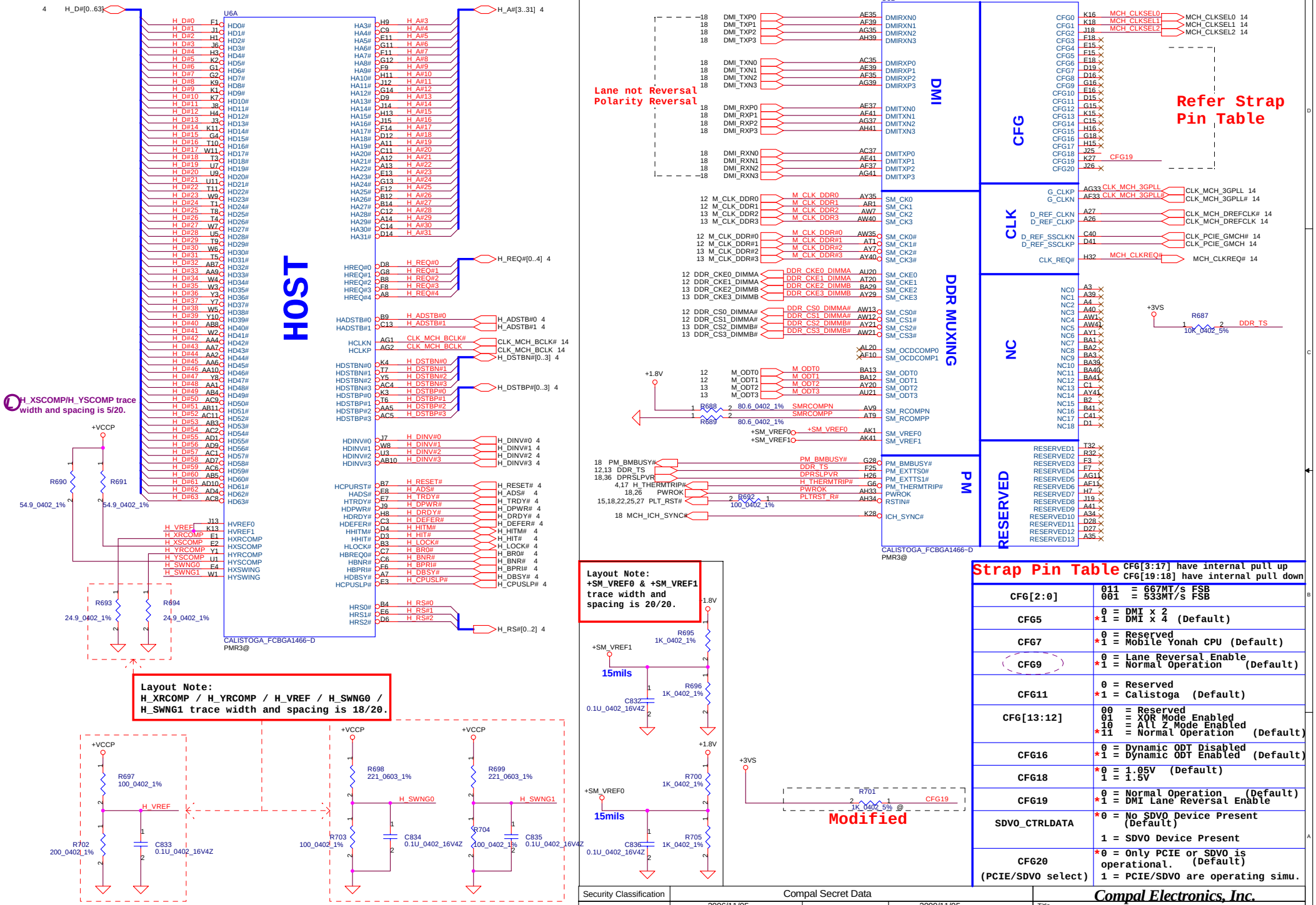

Strap Pin Table

CFG[3:17] have internal pull up
CFG[19:18] have internal pull down

CFG[2:0]	011 = 667MT/s FSB 001 = 533MT/s FSB
CFG5	0 = DMI x 2 *1 = DMI x 4 (Default)
CFG7	0 = Reserved *1 = Mobile Yonah CPU (Default)
CFG9	0 = Lane Reversal Enable *1 = Normal Operation (Default)
CFG11	0 = Reserved *1 = Calistoga (Default)
CFG[13:12]	00 = Reserved 01 = XOR Mode Enabled 10 = All Z Mode Enabled *11 = Normal Operation (Default)
CFG16	0 = Dynamic ODT Disabled *1 = Dynamic ODT Enabled (Default)
CFG18	*0 = 1.05V (Default) 1 = 1.5V
CFG19	0 = Normal Operation (Default) *1 = DMI Lane Reversal Enable
SDVO_CTRLDATA	*0 = No SDVO Device Present (Default) 1 = SDVO Device Present
CFG20 (PCIE/SDVO select)	*0 = Only PCIE or SDVO is operational. (Default) 1 = PCIE/SDVO are operating simu.

Security Classification	Compal Secret Data		
Issued Date	2006/11/05	Deciphered Date	2009/11/05

THIS SHEET OF ENGINEERING DRAWING IS THE PROPRIETARY PROPERTY OF COMPAL ELECTRONICS, INC. AND CONTAINS CONFIDENTIAL AND TRADE SECRET INFORMATION. THIS SHEET MAY NOT BE TRANSFERED FROM THE CUSTODY OF THE COMPETENT DIVISION OF R&D DEPARTMENT EXCEPT AS AUTHORIZED BY COMPAL ELECTRONICS, INC. NEITHER THIS SHEET NOR THE INFORMATION IT CONTAINS MAY BE USED BY OR DISCLOSED TO ANY THIRD PARTY WITHOUT PRIOR WRITTEN CONSENT OF COMPAL ELECTRONICS, INC.

Compal Electronics, Inc.

Title: Calistoga (1/5)

Size: | Document Number: ISRAE M/B LA-3711P | Rev: 1.0

Date: Thursday, March 22, 2007 | Sheet 7 of 39

www.laptop-schematics.com

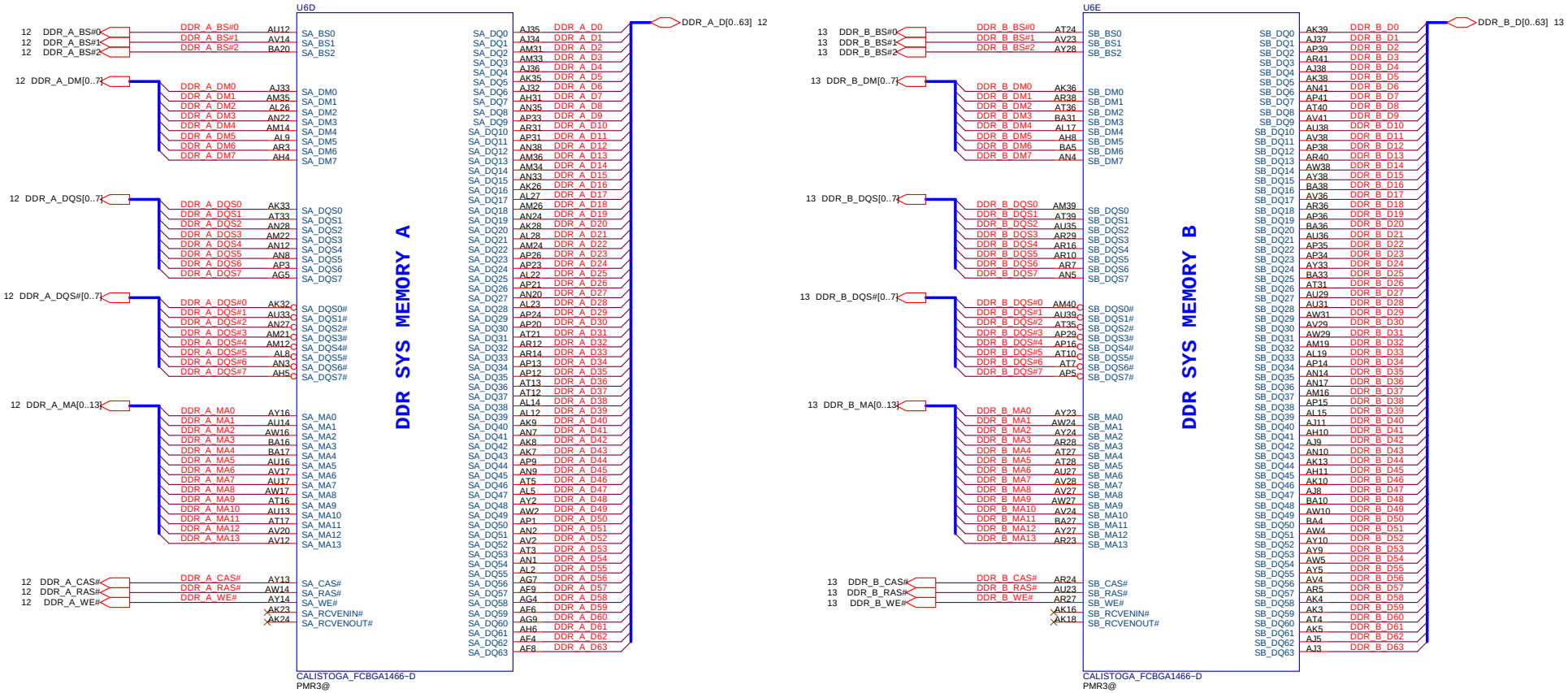

www.laptop-schematics.com

Security Classification	Compal Secret Data		
Issued Date	2006/11/05	Deciphered Date	2009/11/05

THIS SHEET OF ENGINEERING DRAWING IS THE PROPRIETARY PROPERTY OF COMPAL ELECTRONICS, INC. AND CONTAINS CONFIDENTIAL AND TRADE SECRET INFORMATION. THIS SHEET MAY NOT BE TRANSFERED FROM THE CUSTODY OF THE COMPETENT DIVISION OF R&D DEPARTMENT EXCEPT AS AUTHORIZED BY COMPAL ELECTRONICS, INC. NEITHER THIS SHEET NOR THE INFORMATION IT CONTAINS MAY BE USED BY OR DISCLOSED TO ANY THIRD PARTY WITHOUT PRIOR WRITTEN CONSENT OF COMPAL ELECTRONICS, INC.

Compal Electronics, Inc.

Title: **Calistoga (2/5)**

Size: | Document Number: *ISRAE M/B LA-3711P* | Rev: 1.0

Date: Thursday, March 22, 2007 | Sheet 8 of 39

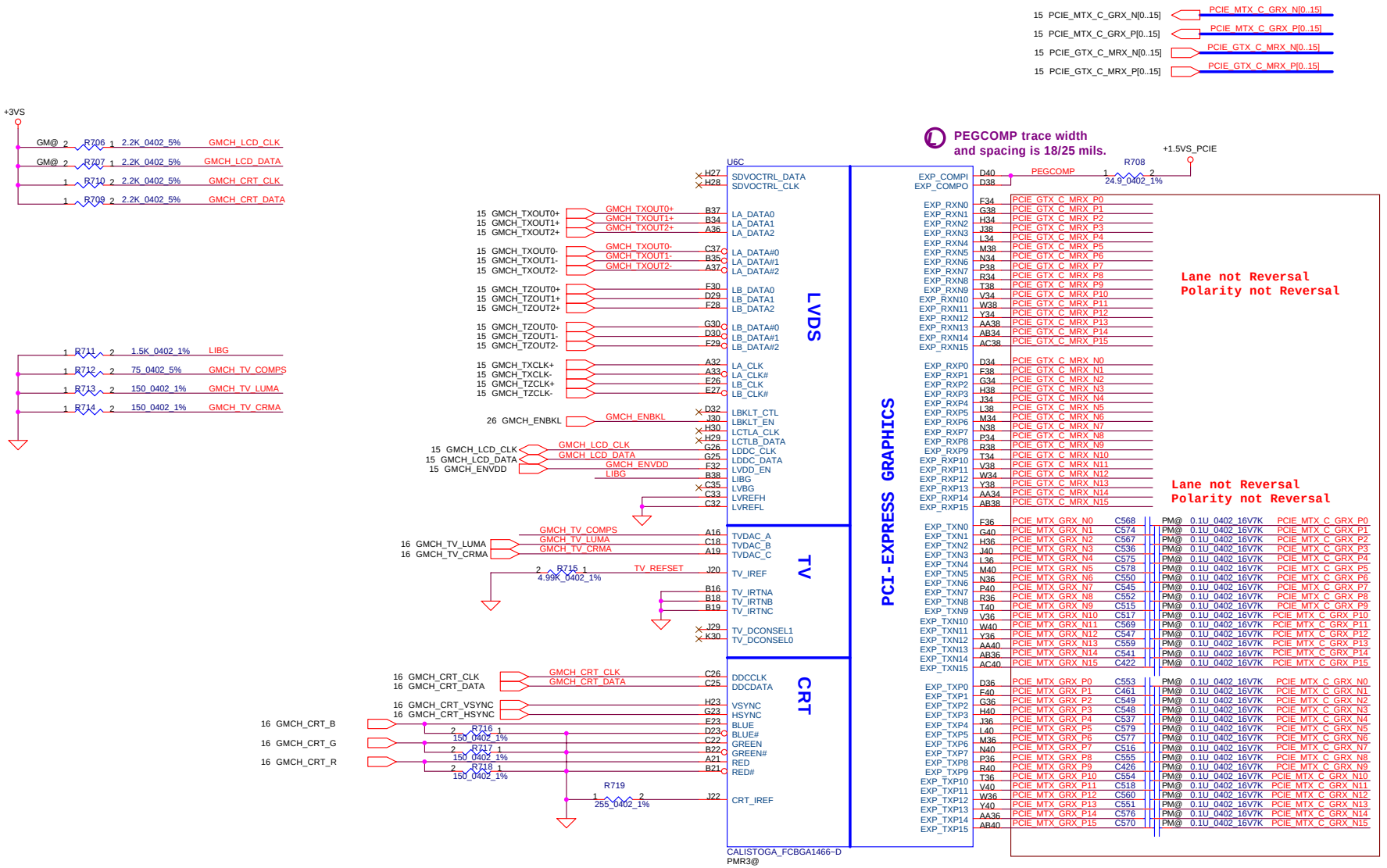

www.laptop-schematics.com

Security Classification	Compal Secret Data		
Issued Date	2006/11/05	Deciphered Date	2009/11/05

THIS SHEET OF ENGINEERING DRAWING IS THE PROPRIETARY PROPERTY OF COMPAL ELECTRONICS, INC. AND CONTAINS CONFIDENTIAL AND TRADE SECRET INFORMATION. THIS SHEET MAY NOT BE TRANSFERED FROM THE CUSTODY OF THE COMPETENT DIVISION OF R&D DEPARTMENT EXCEPT AS AUTHORIZED BY COMPAL ELECTRONICS, INC. NEITHER THIS SHEET NOR THE INFORMATION IT CONTAINS MAY BE USED BY OR DISCLOSED TO ANY THIRD PARTY WITHOUT PRIOR WRITTEN CONSENT OF COMPAL ELECTRONICS, INC.

Compal Electronics, Inc.

Title: Calistoga (3/5)

Size | Document Number: ISRAE M/B LA-3711P | Rev 1.0

Date: Thursday, March 22, 2007 | Sheet 9 of 39

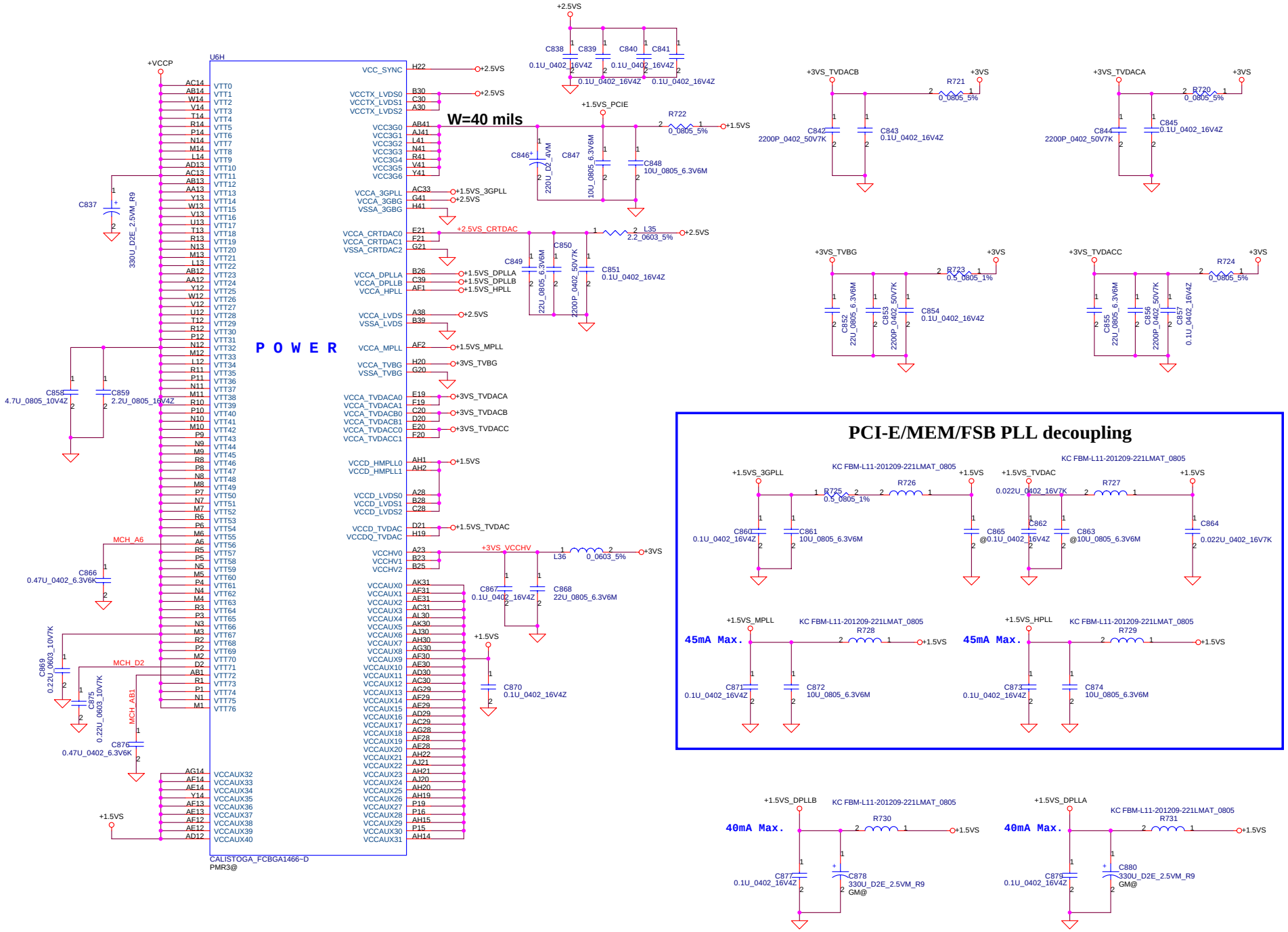

Security Classification	Compal Secret Data		
Issued Date	2006/11/05	Deciphered Date	2009/11/05

THIS SHEET OF ENGINEERING DRAWING IS THE PROPRIETARY PROPERTY OF COMPAL ELECTRONICS, INC. AND CONTAINS CONFIDENTIAL AND TRADE SECRET INFORMATION. THIS SHEET MAY NOT BE TRANSFERED FROM THE CUSTODY OF THE COMPETENT DIVISION OF R&D DEPARTMENT EXCEPT AS AUTHORIZED BY COMPAL ELECTRONICS, INC. NEITHER THIS SHEET NOR THE INFORMATION IT CONTAINS MAY BE USED BY OR DISCLOSED TO ANY THIRD PARTY WITHOUT PRIOR WRITTEN CONSENT OF COMPAL ELECTRONICS, INC.

Compal Electronics, Inc.

Title: **Calistoga (4/5)**

Size | Document Number: **ISRAE M/B LA-3711P** | Rev 1.0

Date: Thursday, March 22, 2007 | Sheet 10 of 39

www.laptop-schematics.com

POWER

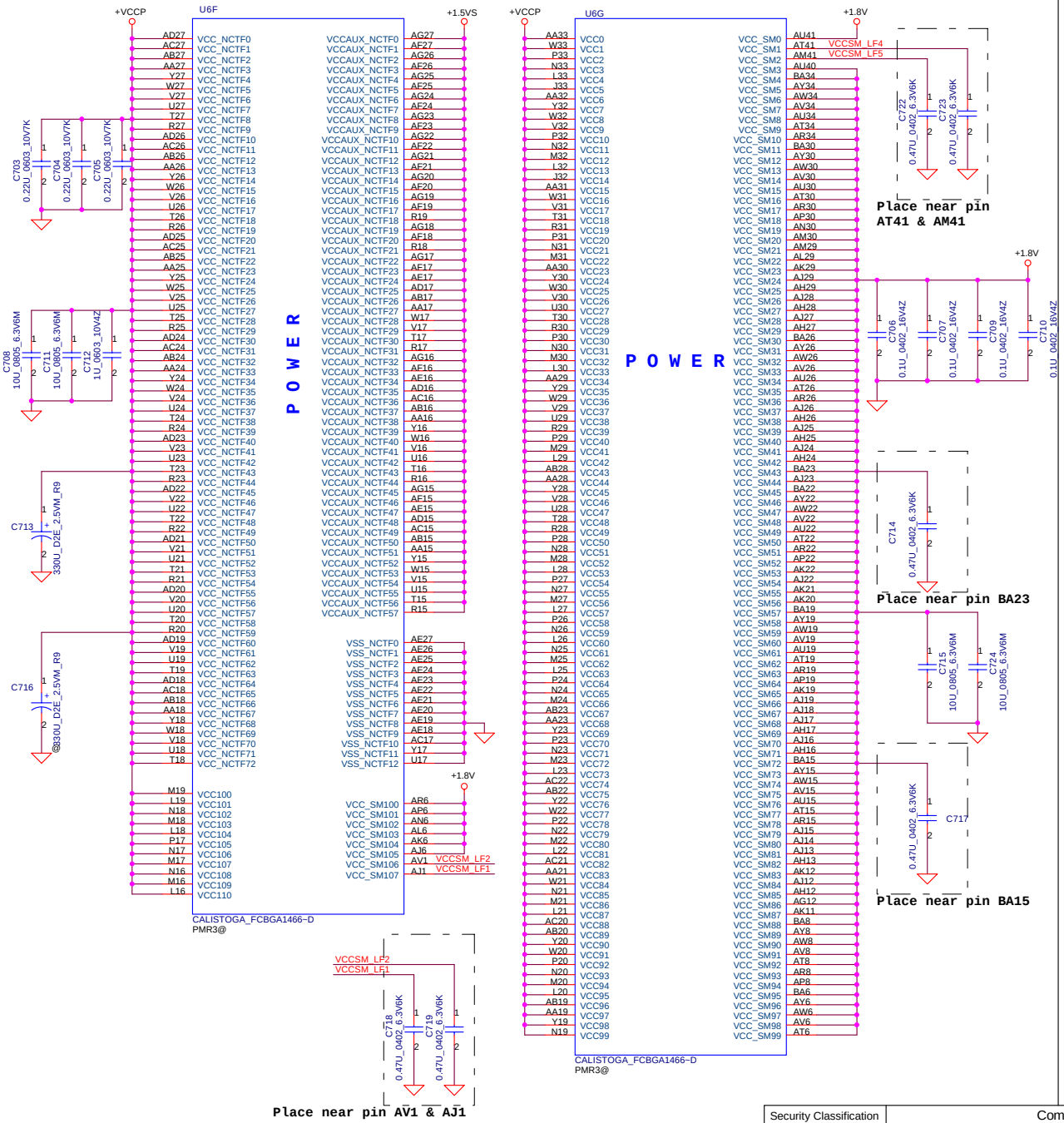

GND

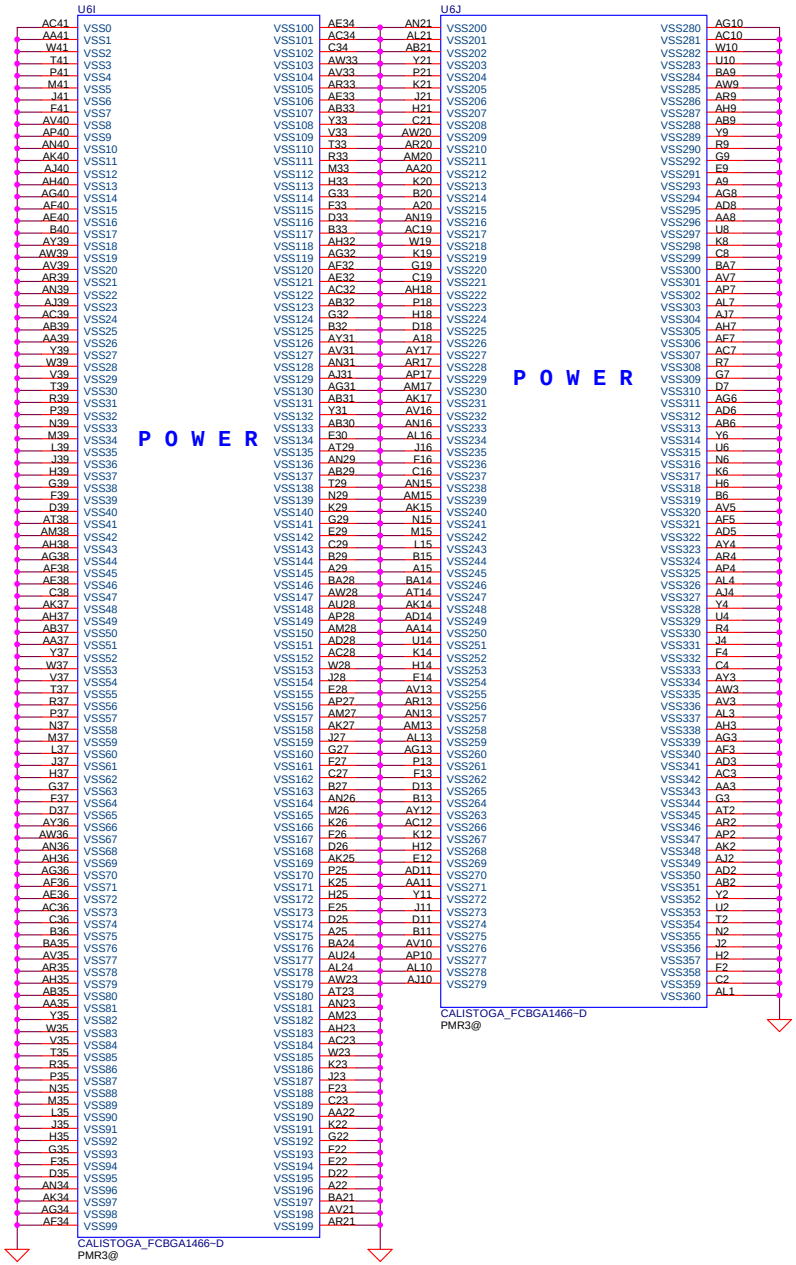

Security Classification	Compal Secret Data		
Issued Date	2006/11/05	Deciphered Date	2009/11/05

THIS SHEET OF ENGINEERING DRAWING IS THE PROPRIETARY PROPERTY OF COMPAL ELECTRONICS, INC. AND CONTAINS CONFIDENTIAL AND TRADE SECRET INFORMATION. THIS SHEET MAY NOT BE TRANSFERED FROM THE CUSTODY OF THE COMPETENT DIVISION OF R&D DEPARTMENT EXCEPT AS AUTHORIZED BY COMPAL ELECTRONICS, INC. NEITHER THIS SHEET NOR THE INFORMATION IT CONTAINS MAY BE USED BY OR DISCLOSED TO ANY THIRD PARTY WITHOUT PRIOR WRITTEN CONSENT OF COMPAL ELECTRONICS, INC.

Compal Electronics, Inc.

Title: **Calistoga (5/5)**

Size: | Document Number: **ISRAE M/B LA-3711P** | Rev: 1.0

Date: Thursday, March 22, 2007 | Sheet 11 of 39

www.laptop-schematics.com

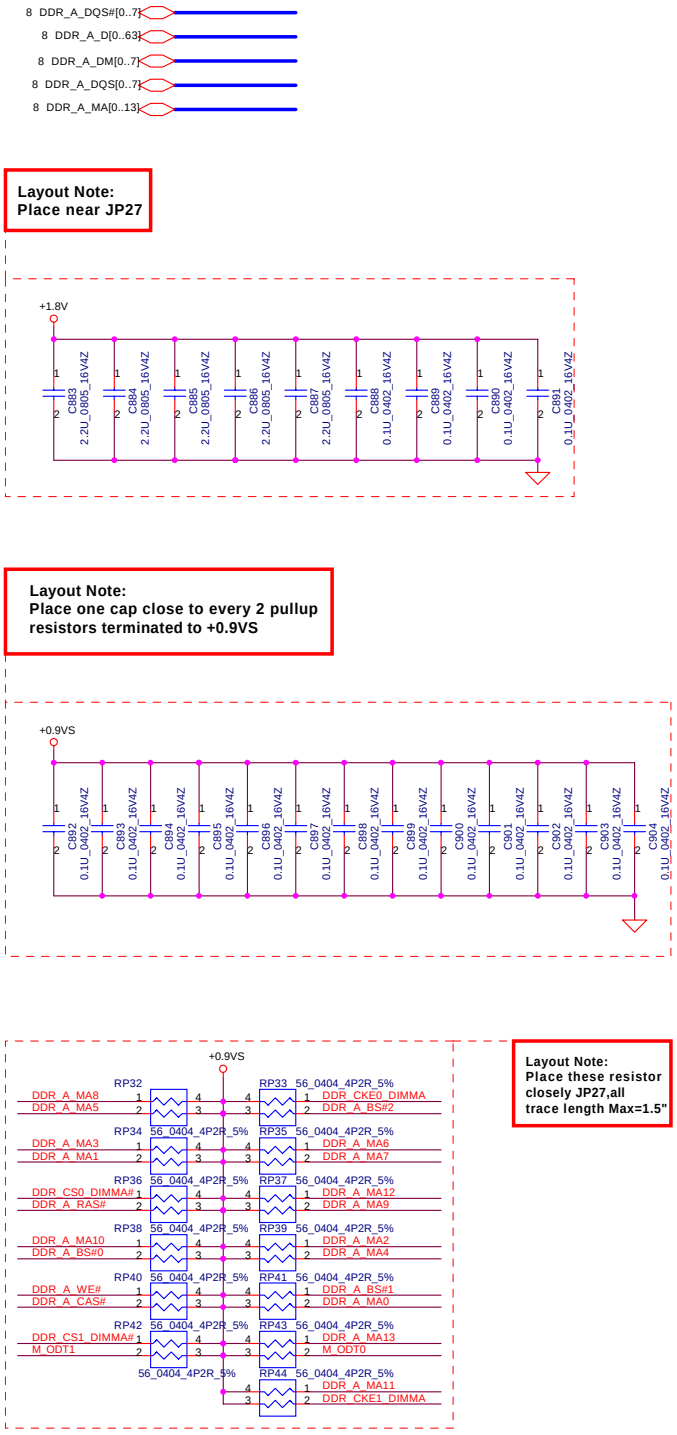

Security Classification	Compal Secret Data		
Issued Date	2006/11/05	Deciphered Date	2009/11/05

THIS SHEET OF ENGINEERING DRAWING IS THE PROPRIETARY PROPERTY OF COMPAL ELECTRONICS, INC. AND CONTAINS CONFIDENTIAL AND TRADE SECRET INFORMATION. THIS SHEET MAY NOT BE TRANSFERED FROM THE CUSTODY OF THE COMPETENT DIVISION OF R&D DEPARTMENT EXCEPT AS AUTHORIZED BY COMPAL ELECTRONICS, INC. NEITHER THIS SHEET NOR THE INFORMATION IT CONTAINS MAY BE USED BY OR DISCLOSED TO ANY THIRD PARTY WITHOUT PRIOR WRITTEN CONSENT OF COMPAL ELECTRONICS, INC.

Compal Electronics, Inc.

Title: **DDRII-SODIMM SLOT1**

Size | Document Number: *ISRAE M/B LA-3711P* | Rev 1.0

Date: Thursday, March 22, 2007 | Sheet 12 of 39

www.laptop-schematics.com

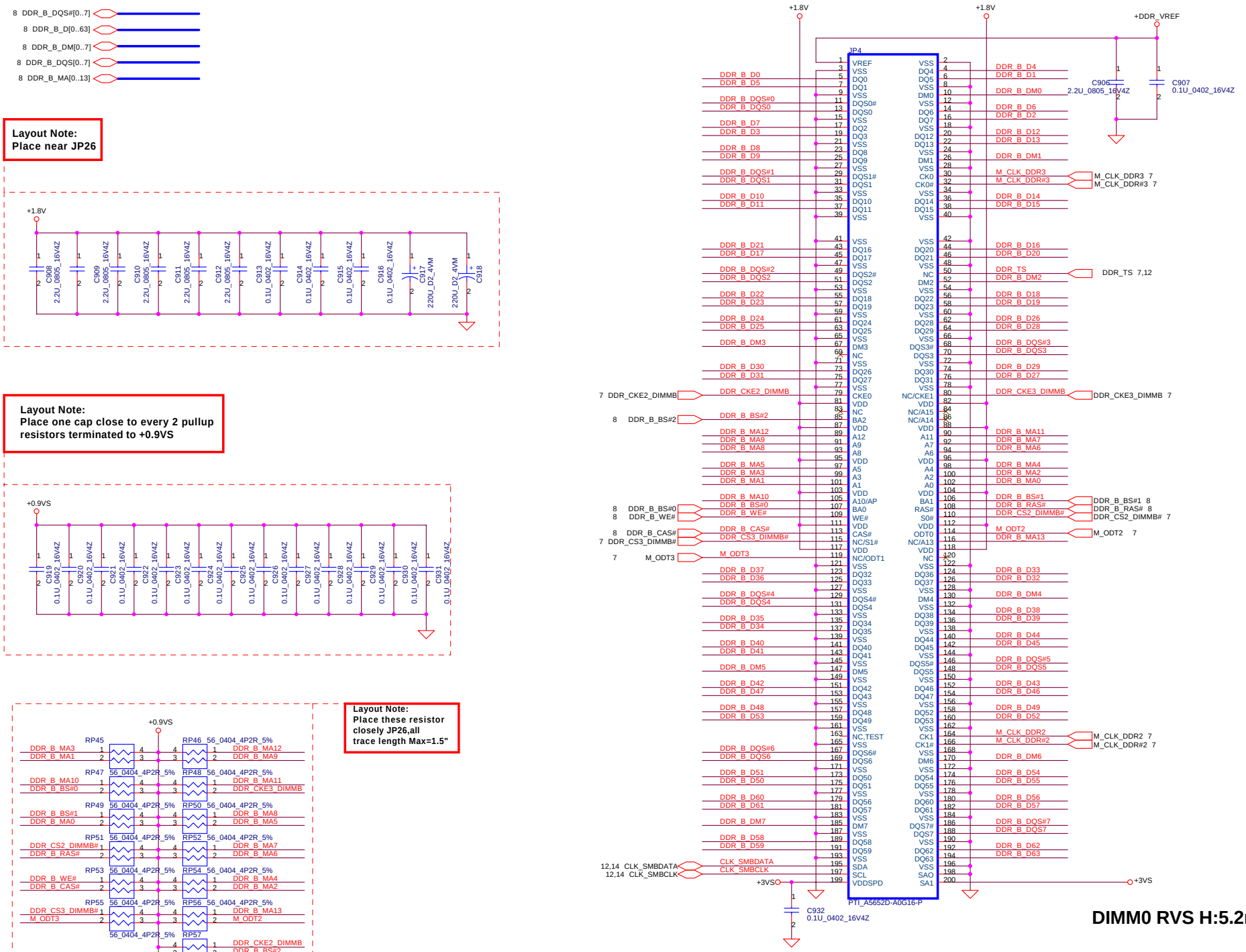

Security Classification	Compal Secret Data		
Issued Date	2006/11/05	Deciphered Date	2009/11/05

THIS SHEET OF ENGINEERING DRAWING IS THE PROPRIETARY PROPERTY OF COMPAL ELECTRONICS, INC. AND CONTAINS CONFIDENTIAL AND TRADE SECRET INFORMATION. THIS SHEET MAY NOT BE TRANSFERED FROM THE CUSTODY OF THE COMPETENT DIVISION OF R&D DEPARTMENT EXCEPT AS AUTHORIZED BY COMPAL ELECTRONICS, INC. NEITHER THIS SHEET NOR THE INFORMATION IT CONTAINS MAY BE USED BY OR DISCLOSED TO ANY THIRD PARTY WITHOUT PRIOR WRITTEN CONSENT OF COMPAL ELECTRONICS, INC.

Compal Electronics, Inc.

Title: **DDRII-SODIMM SLOT2**

Size | Document Number: *ISRAE M/B LA-3711P* | Rev 1.0

Date: Thursday, March 22, 2007 | Sheet 13 of 39

www.laptop-schematics.com

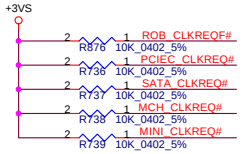

FSLC CLKSEL2	FSLB CLKSEL1	FSLA CLKSEL0	CPU MHz	SRC MHz	PCI MHz
0	0	1	133	100	33.3
0	1	1	166	100	33.3

FSA

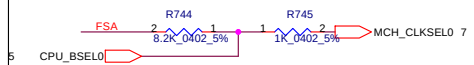

FSB

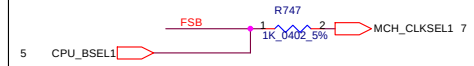

FSC
(Fixed at low)

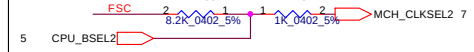

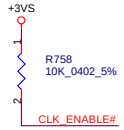

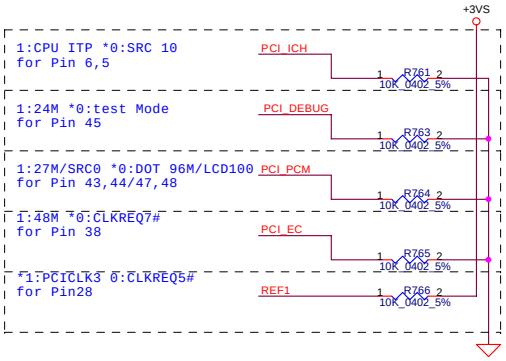

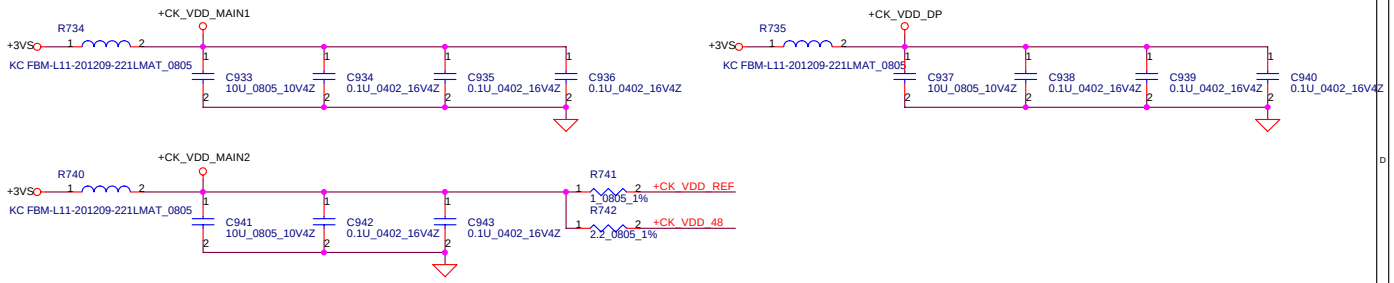

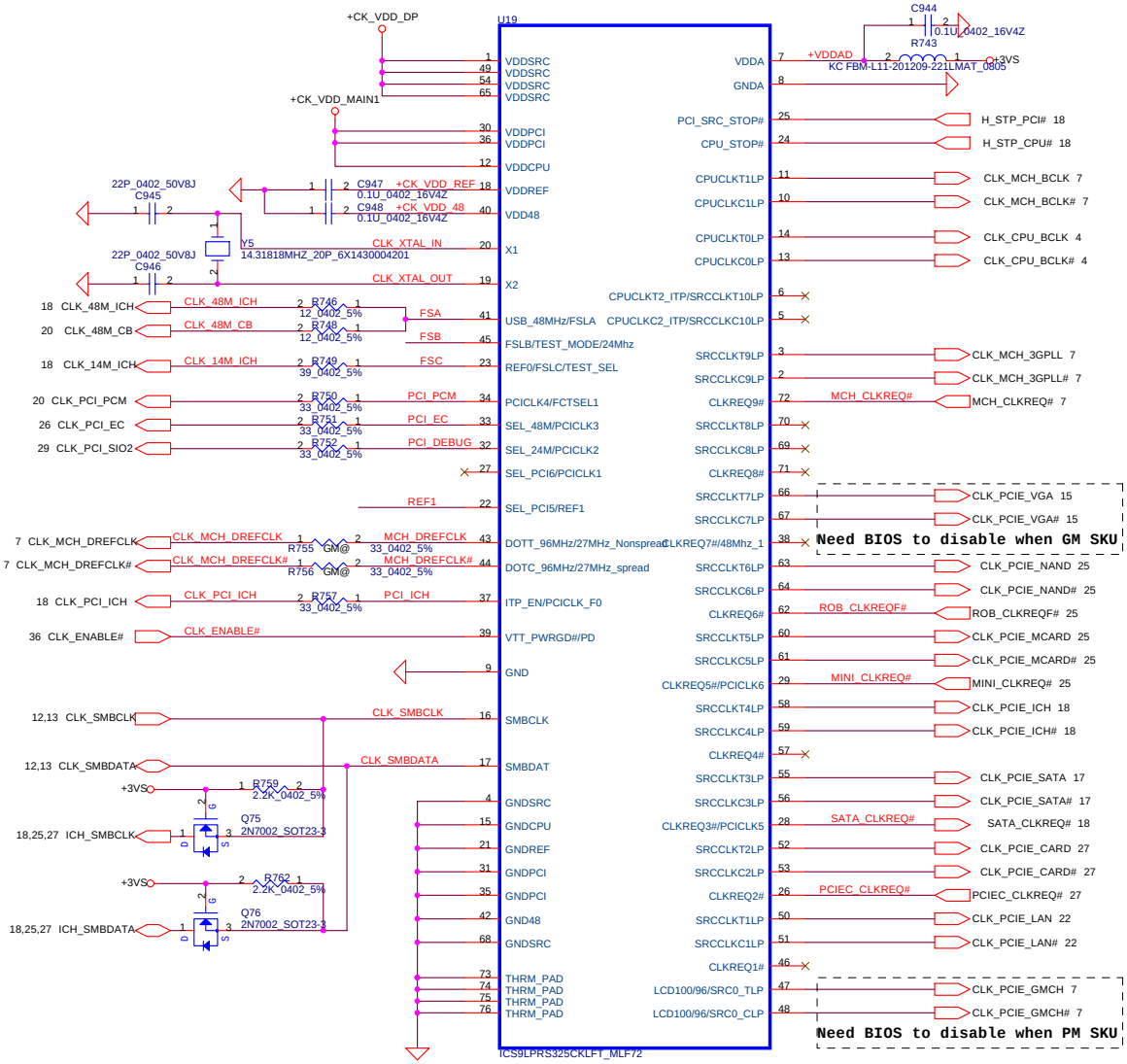

Security Classification	Compal Secret Data		
Issued Date	2006/11/05	Deciphered Date	2009/11/05

THIS SHEET OF ENGINEERING DRAWING IS THE PROPRIETARY PROPERTY OF COMPAL ELECTRONICS, INC. AND CONTAINS CONFIDENTIAL AND TRADE SECRET INFORMATION. THIS SHEET MAY NOT BE TRANSFERED FROM THE CUSTODY OF THE COMPETENT DIVISION OF R&D DEPARTMENT EXCEPT AS AUTHORIZED BY COMPAL ELECTRONICS, INC. NEITHER THIS SHEET NOR THE INFORMATION IT CONTAINS MAY BE USED BY OR DISCLOSED TO ANY THIRD PARTY WITHOUT PRIOR WRITTEN CONSENT OF COMPAL ELECTRONICS, INC.

Compal Electronics, Inc.

Title: Clock generator

Size | Document Number: ISRAE M/B LA-3711P | Rev 1.0

Date: Thursday, March 22, 2007 | Sheet 14 of 39

www.laptop-schematics.com

LCD POWER CIRCUIT

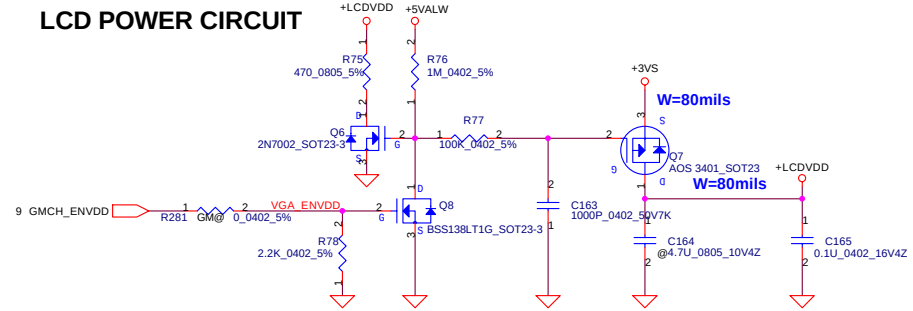

VGA BOARD Conn.

VGA BOARD Conn.

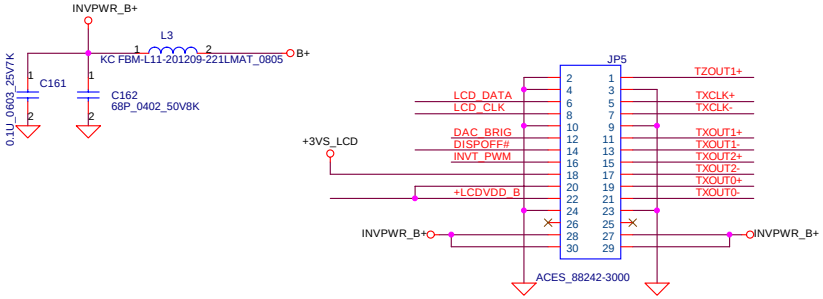

LCD/PANEL BD. Conn.

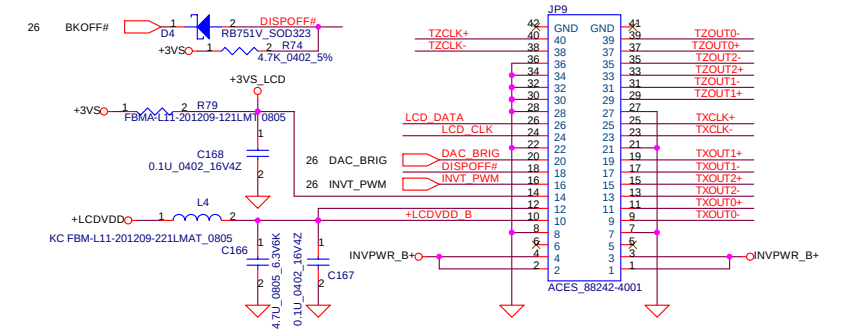

For EMI Request

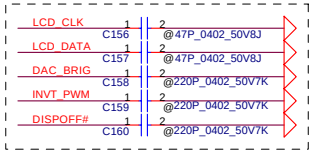

ALL R CLOSE LVDS CONNECTOR

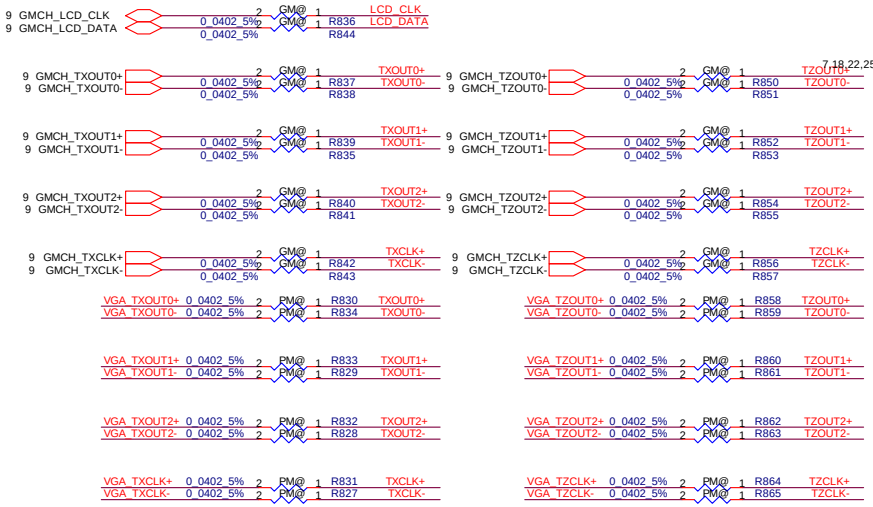

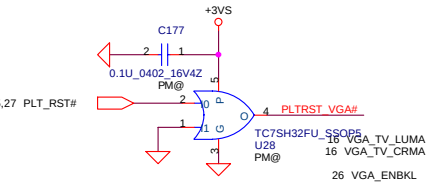

Security Classification	Compal Secret Data		
Issued Date	2006/08/05	Deciphered Date	2007/08/05

THIS SHEET OF ENGINEERING DRAWING IS THE PROPRIETARY PROPERTY OF COMPAL ELECTRONICS, INC. AND CONTAINS CONFIDENTIAL AND TRADE SECRET INFORMATION. THIS SHEET MAY NOT BE TRANSFERED FROM THE CUSTODY OF THE COMPETENT DIVISION OF R&D DEPARTMENT EXCEPT AS AUTHORIZED BY COMPAL ELECTRONICS, INC. NEITHER THIS SHEET NOR THE INFORMATION IT CONTAINS MAY BE USED BY OR DISCLOSED TO ANY THIRD PARTY WITHOUT PRIOR WRITTEN CONSENT OF COMPAL ELECTRONICS, INC.

Compal Electronics, Inc.

Title: VGA CONN

Size: | Document Number: ISRAE M/B LA-3711P | Rev: 1.0

Date: Thursday, March 22, 2007 | Sheet 15 of 39

www.laptop-schematics.com

CRT CONNECTOR

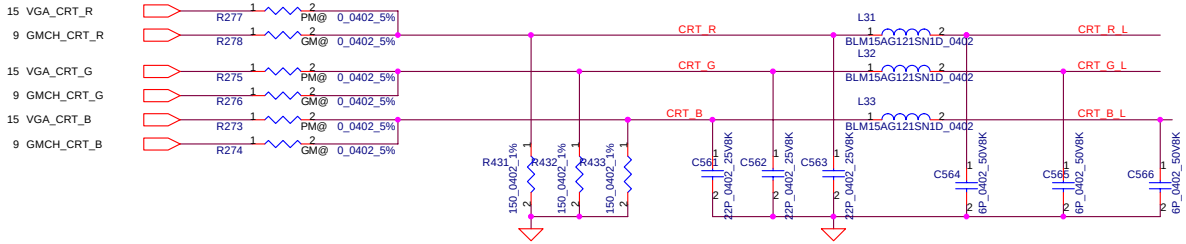

CRT Conn.

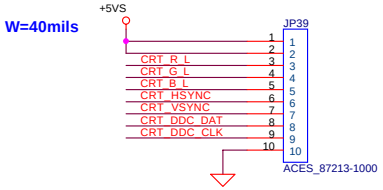

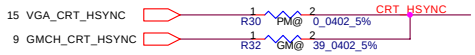

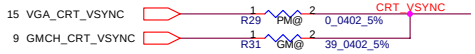

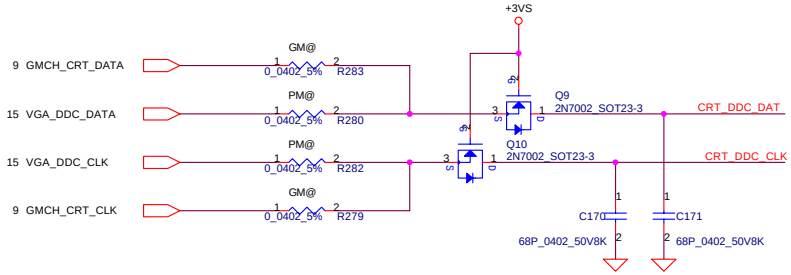

TV-OUT Conn.

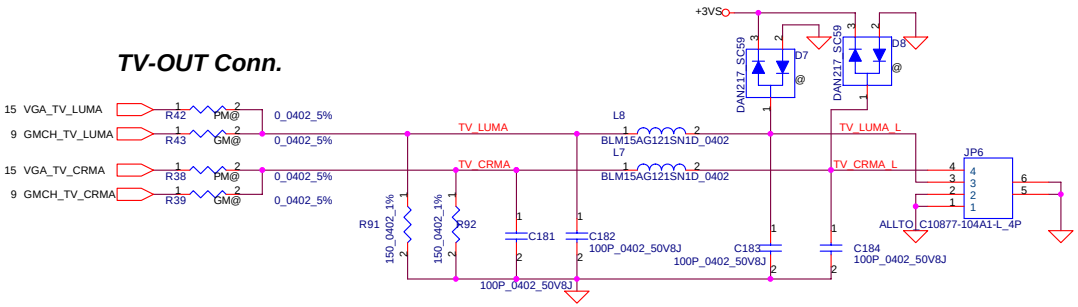

www.laptop-schematics.com

Security Classification	Compal Secret Data		
Issued Date	2006/10/31	Deciphered Date	2009/11/13

THIS SHEET OF ENGINEERING DRAWING IS THE PROPRIETARY PROPERTY OF COMPAL ELECTRONICS, INC. AND CONTAINS CONFIDENTIAL AND TRADE SECRET INFORMATION. THIS SHEET MAY NOT BE TRANSFERED FROM THE CUSTODY OF THE COMPETENT DIVISION OF R&D DEPARTMENT EXCEPT AS AUTHORIZED BY COMPAL ELECTRONICS, INC. NEITHER THIS SHEET NOR THE INFORMATION IT CONTAINS MAY BE USED BY OR DISCLOSED TO ANY THIRD PARTY WITHOUT PRIOR WRITTEN CONSENT OF COMPAL ELECTRONICS, INC.

Compal Electronics, Inc.

Title: ***Display Interface Connector***

Size | Document Number: ***ISRAE M/B LA-3711P*** | Rev 1.0

Date: Thursday, March 22, 2007 | Sheet 16 of 39

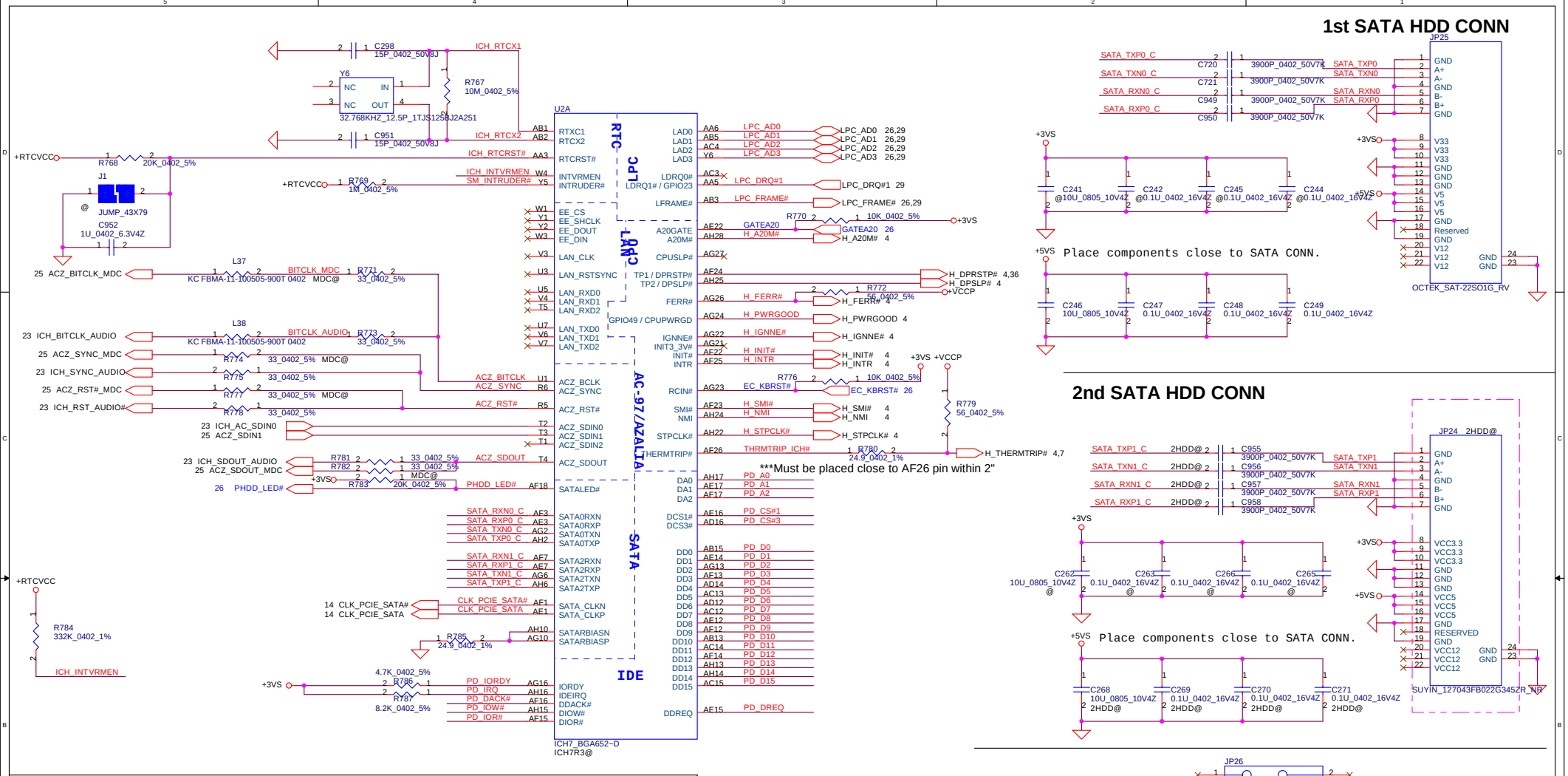

RTC Battery

Layout Note:

1. Under BATT1 battery Body, no Trace no Via
2. BATT1 + - PIN keep out 80mil from other component ,trace and via

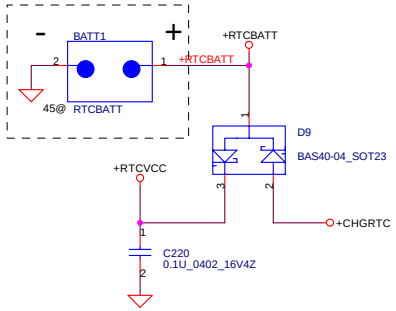

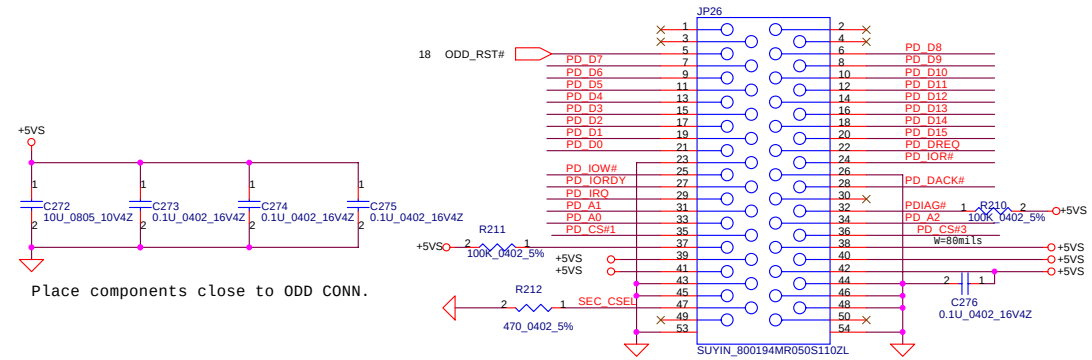

www.laptop-schematics.com

Security Classification	Compal Secret Data		
Issued Date	2006/11/05	Deciphered Date	2009/11/05

THIS SHEET OF ENGINEERING DRAWING IS THE PROPRIETARY PROPERTY OF COMPAL ELECTRONICS, INC. AND CONTAINS CONFIDENTIAL AND TRADE SECRET INFORMATION. THIS SHEET MAY NOT BE TRANSFERED FROM THE CUSTODY OF THE COMPETENT DIVISION OF R&D DEPARTMENT EXCEPT AS AUTHORIZED BY COMPAL ELECTRONICS, INC. NEITHER THIS SHEET NOR THE INFORMATION IT CONTAINS MAY BE USED BY OR DISCLOSED TO ANY THIRD PARTY WITHOUT PRIOR WRITTEN CONSENT OF COMPAL ELECTRONICS, INC.

Compal Electronics, Inc.

Title: ICH7-M(1/3)

Size | Document Number: ISRAE M/B LA-3711P | Rev 1.0

Date: Thursday, March 29, 2007 | Sheet 17 of 39

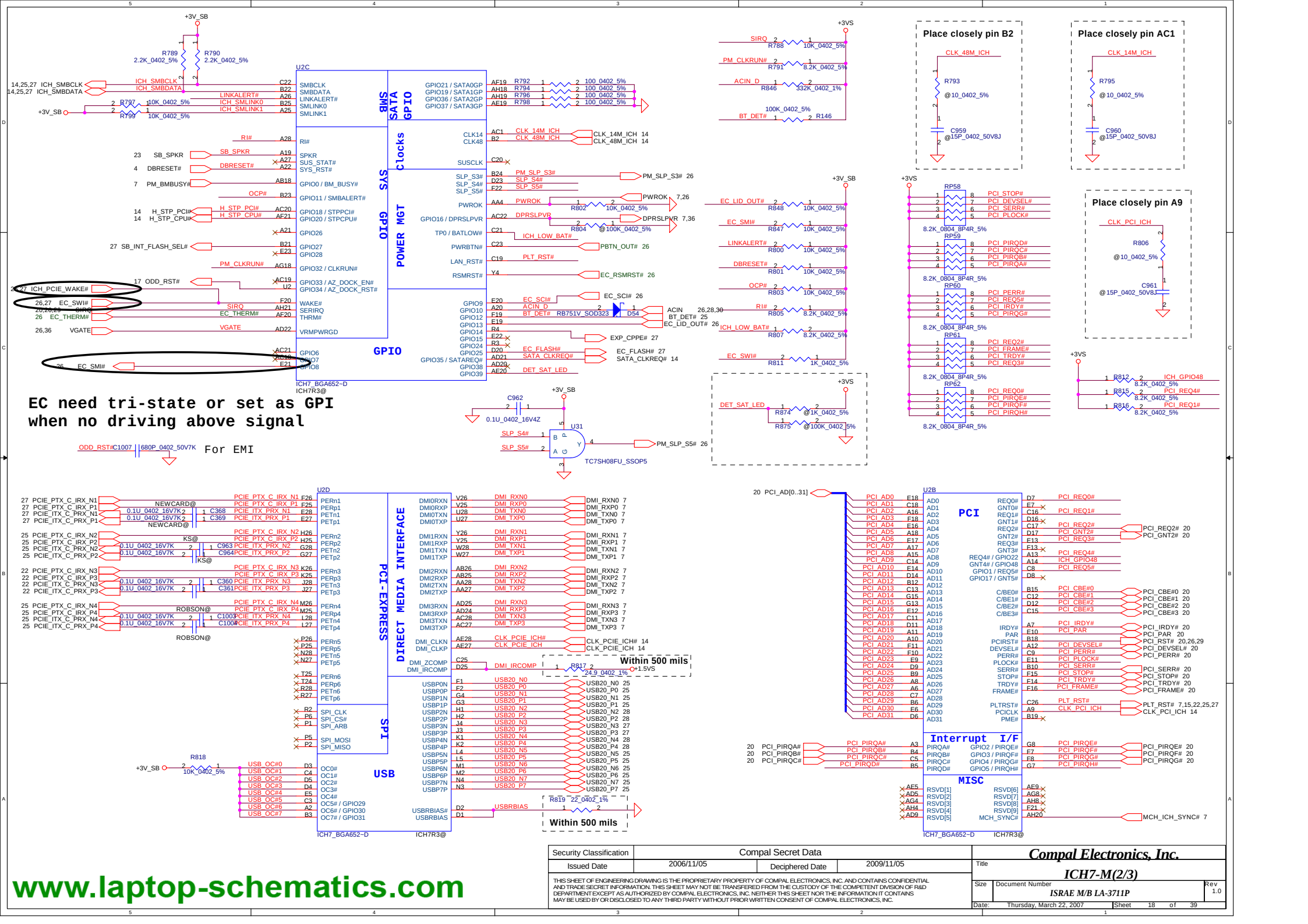

www.laptop-schematics.com

Security Classification	Compal Secret Data		
Issued Date	2006/11/05	Deciphered Date	2009/11/05

THIS SHEET OF ENGINEERING DRAWING IS THE PROPRIETARY PROPERTY OF COMPAL ELECTRONICS, INC. AND CONTAINS CONFIDENTIAL AND TRADE SECRET INFORMATION. THIS SHEET MAY NOT BE TRANSFERED FROM THE CUSTODY OF THE COMPETENT DIVISION OF R&D DEPARTMENT EXCEPT AS AUTHORIZED BY COMPAL ELECTRONICS, INC. NEITHER THIS SHEET NOR THE INFORMATION IT CONTAINS MAY BE USED BY OR DISCLOSED TO ANY THIRD PARTY WITHOUT PRIOR WRITTEN CONSENT OF COMPAL ELECTRONICS, INC.

Compal Electronics, Inc.

Title: ICH7-M(2/3)

Size | Document Number: ISRAE M/B LA-3711P | Rev 1.0

Date: Thursday, March 22, 2007 | Sheet 18 of 39

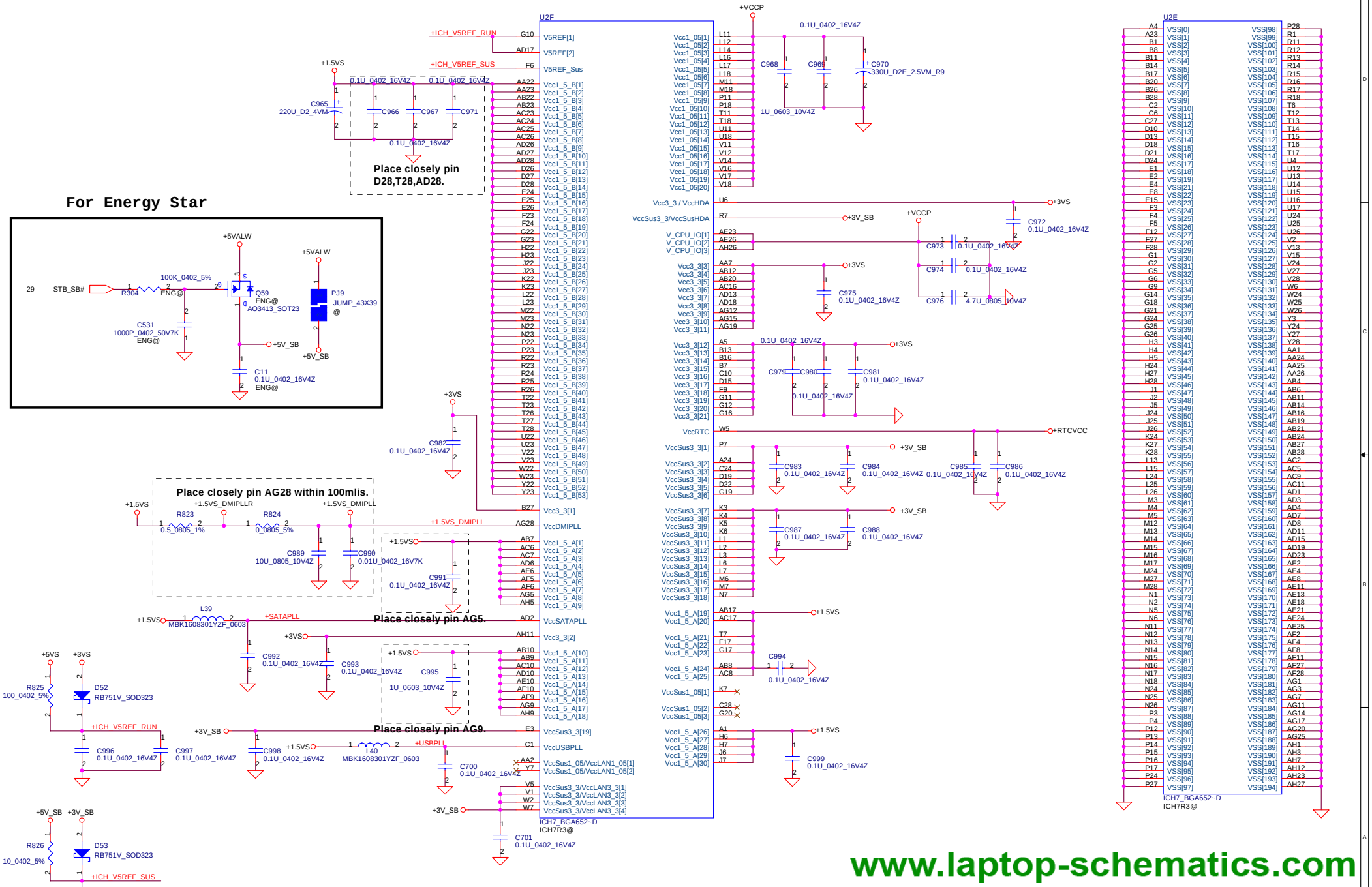

www.laptop-schematics.com

Security Classification	Compal Secret Data		
Issued Date	2006/11/05	Deciphered Date	2009/11/05

THIS SHEET OF ENGINEERING DRAWING IS THE PROPRIETARY PROPERTY OF COMPAL ELECTRONICS, INC. AND CONTAINS CONFIDENTIAL AND TRADE SECRET INFORMATION. THIS SHEET MAY NOT BE TRANSFERED FROM THE CUSTODY OF THE COMPETENT DIVISION OF R&D DEPARTMENT EXCEPT AS AUTHORIZED BY COMPAL ELECTRONICS, INC. NEITHER THIS SHEET NOR THE INFORMATION IT CONTAINS MAY BE USED BY OR DISCLOSED TO ANY THIRD PARTY WITHOUT PRIOR WRITTEN CONSENT OF COMPAL ELECTRONICS, INC.

Compal Electronics, Inc.

Title: **ICH7-M(3/3)**

Size | Document Number: **ISRAE M/B LA-3711P** | Rev 1.0

Date: Thursday, March 22, 2007 | Sheet 19 of 39

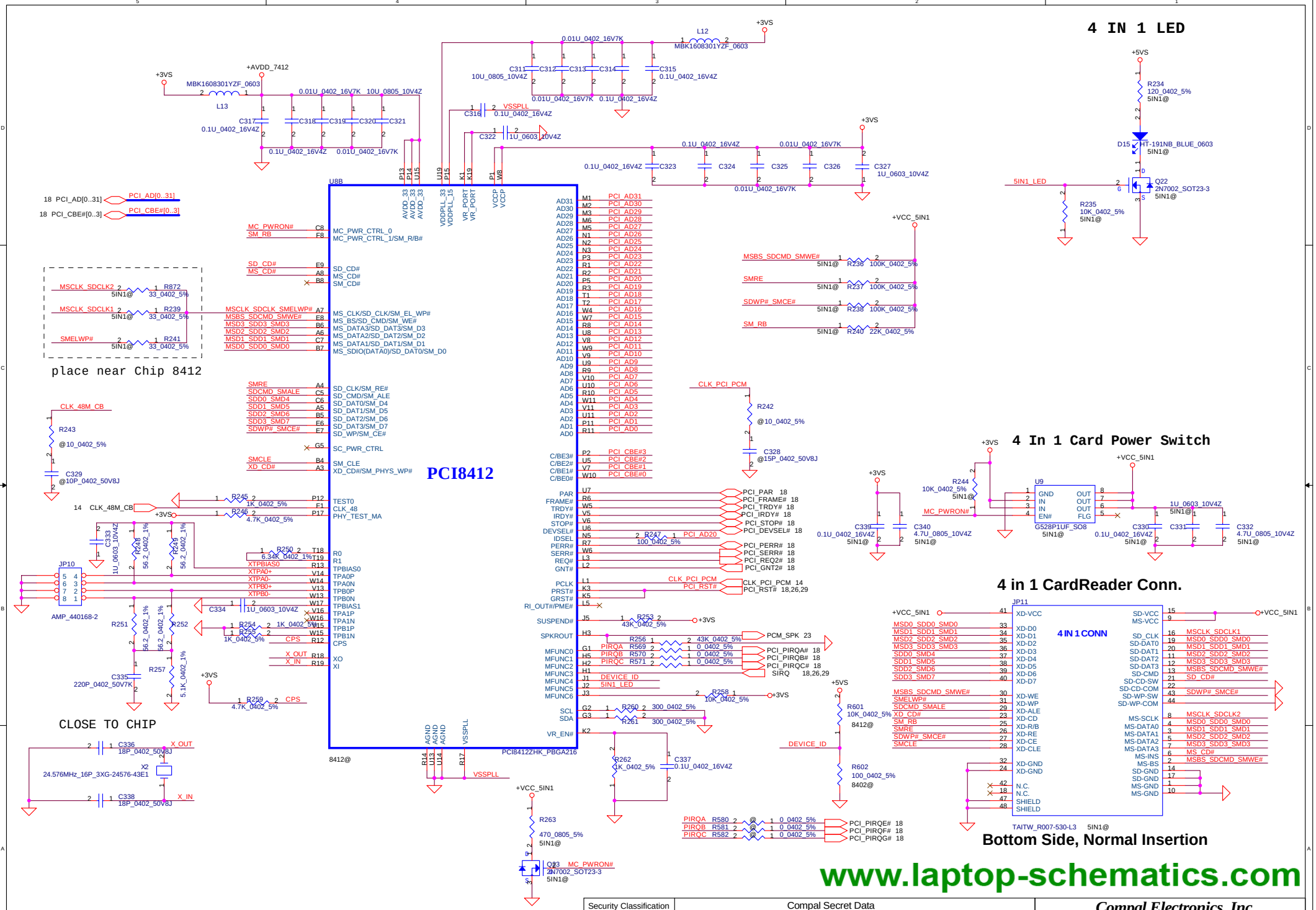

Security Classification	Compal Secret Data		
Issued Date	2006/10/31	Deciphered Date	2009/11/13

THIS SHEET OF ENGINEERING DRAWING IS THE PROPRIETARY PROPERTY OF COMPAL ELECTRONICS, INC. AND CONTAINS CONFIDENTIAL AND TRADE SECRET INFORMATION. THIS SHEET MAY NOT BE TRANSFERED FROM THE CUSTODY OF THE COMPETENT DIVISION OF R&D DEPARTMENT EXCEPT AS AUTHORIZED BY COMPAL ELECTRONICS, INC. NEITHER THIS SHEET NOR THE INFORMATION IT CONTAINS MAY BE USED BY OR DISCLOSED TO ANY THIRD PARTY WITHOUT PRIOR WRITTEN CONSENT OF COMPAL ELECTRONICS, INC.

Compal Electronics, Inc.

Title: PCI8412/PCI/1394 CONN/CARD SLOT

Size: Custom | Document Number: ISRAE M/B LA-3711P | Rev: 1.0

Date: Thursday, March 22, 2007 | Sheet 20 of 39

CardBus Power Switch

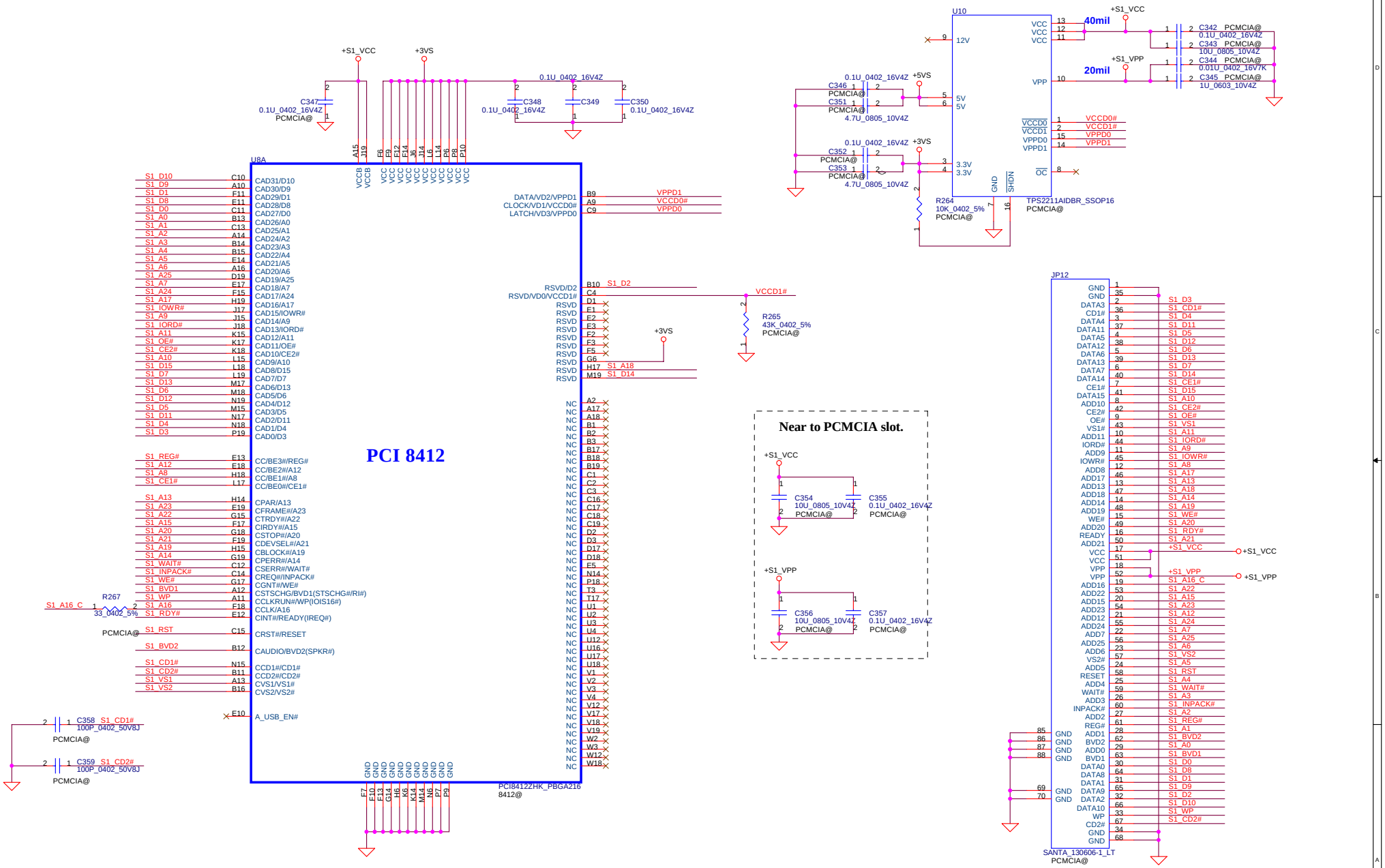

www.laptop-schematics.com

Security Classification	Compal Secret Data		
Issued Date	2006/10/31	Deciphered Date	2009/11/13

THIS SHEET OF ENGINEERING DRAWING IS THE PROPRIETARY PROPERTY OF COMPAL ELECTRONICS, INC. AND CONTAINS CONFIDENTIAL AND TRADE SECRET INFORMATION. THIS SHEET MAY NOT BE TRANSFERED FROM THE CUSTODY OF THE COMPETENT DIVISION OF R&D DEPARTMENT EXCEPT AS AUTHORIZED BY COMPAL ELECTRONICS, INC. NEITHER THIS SHEET NOR THE INFORMATION IT CONTAINS MAY BE USED BY OR DISCLOSED TO ANY THIRD PARTY WITHOUT PRIOR WRITTEN CONSENT OF COMPAL ELECTRONICS, INC.

Compal Electronics, Inc.

Title: PCI7412/CB/CB SLOT

Size: Custom | Document Number: ISRAE M/B LA-3711P | Rev: 1.0

Date: Thursday, March 22, 2007 | Sheet 21 of 39

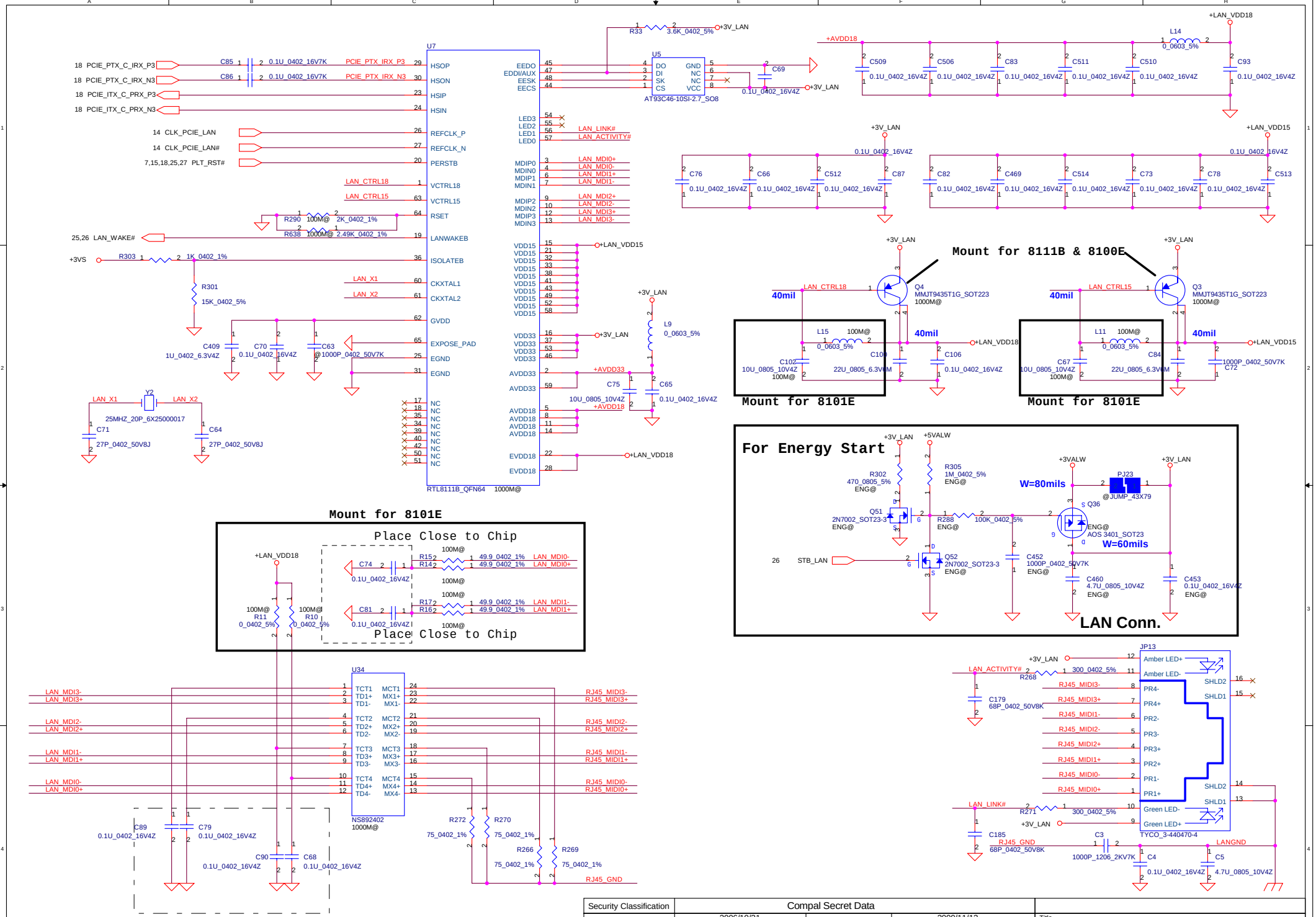

Security Classification	Compal Secret Data		
Issued Date	2006/10/31	Deciphered Date	2009/11/13

THIS SHEET OF ENGINEERING DRAWING IS THE PROPRIETARY PROPERTY OF COMPAL ELECTRONICS, INC. AND CONTAINS CONFIDENTIAL AND TRADE SECRET INFORMATION. THIS SHEET MAY NOT BE TRANSFERED FROM THE CUSTODY OF THE COMPETENT DIVISION OF R&D DEPARTMENT EXCEPT AS AUTHORIZED BY COMPAL ELECTRONICS, INC. NEITHER THIS SHEET NOR THE INFORMATION IT CONTAINS MAY BE USED BY OR DISCLOSED TO ANY THIRD PARTY WITHOUT PRIOR WRITTEN CONSENT OF COMPAL ELECTRONICS, INC.

Title: RTL8100CL

Size: Custom | Document Number: ISRAE M/B LA-3711P | Rev: 1.0

Date: Thursday, March 22, 2007 | Sheet 22 of 39

HD Audio Codec

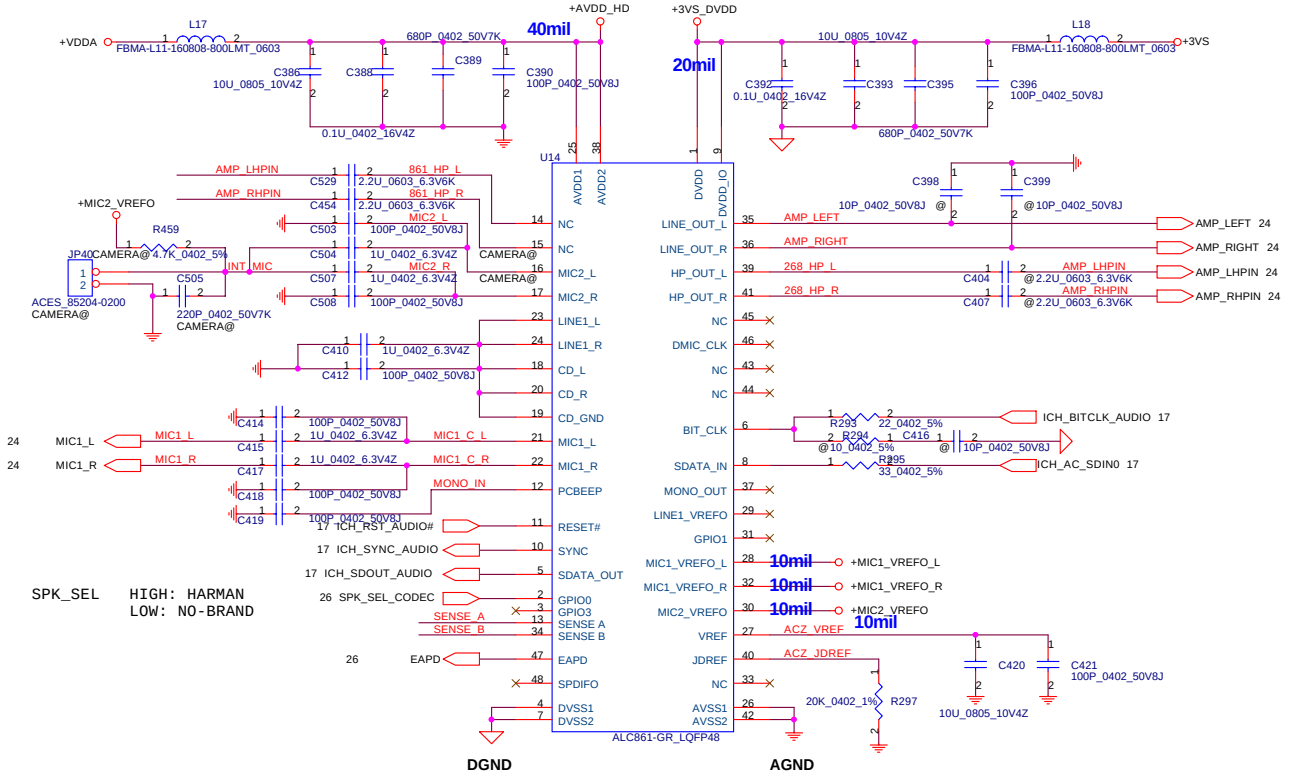

SPK_SEL HIGH: HARMAN
LOW: NO-BRAND

EC Beep

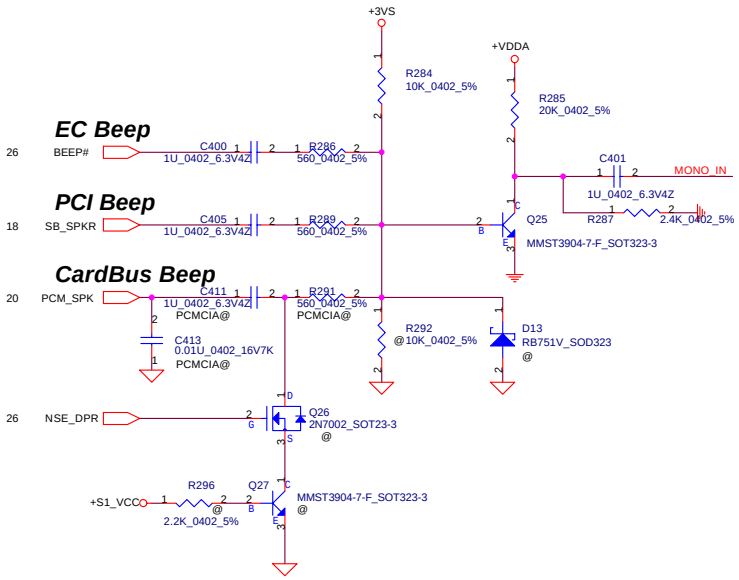

Regulator for CODEC

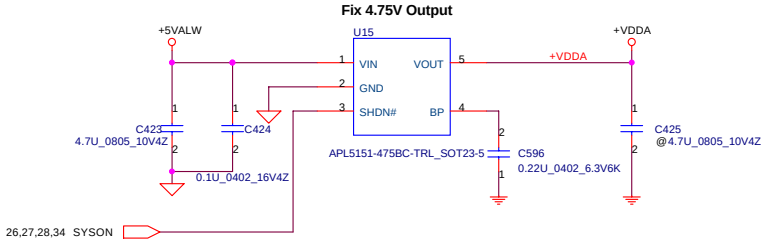

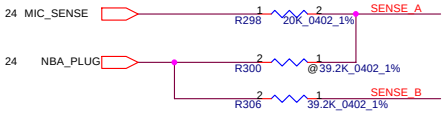

SENSE FOR Int. Mic.

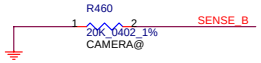

Sense Pin	Impedance	Codec Signals
SENSE A	39.2K	PORT-A (PIN 39, 41)
	20K	PORT-B (PIN 21, 22)
	10K	PORT-C (PIN 23, 24)
	5.1K	PORT-D (PIN 35, 36)
SENSE B	39.2K	PORT-E (PIN 14, 15)
	20K	PORT-F (PIN 16, 17)
	10K	PORT-G (PIN 43, 44)
	5.1K	PORT-H (PIN 45, 46)

Moat Bridge

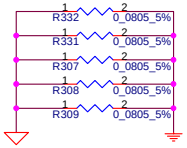

Security Classification	Compal Secret Data		
Issued Date	2006/10/31	Deciphered Date	2009/11/13

THIS SHEET OF ENGINEERING DRAWING IS THE PROPRIETARY PROPERTY OF COMPAL ELECTRONICS, INC. AND CONTAINS CONFIDENTIAL AND TRADE SECRET INFORMATION. THIS SHEET MAY NOT BE TRANSFERED FROM THE CUSTODY OF THE COMPETENT DIVISION OF R&D DEPARTMENT EXCEPT AS AUTHORIZED BY COMPAL ELECTRONICS, INC. NEITHER THIS SHEET NOR THE INFORMATION IT CONTAINS MAY BE USED BY OR DISCLOSED TO ANY THIRD PARTY WITHOUT PRIOR WRITTEN CONSENT OF COMPAL ELECTRONICS, INC.

Compal Electronics, Inc.

Title: HD Audio Codec ALC268

Size: Custom | Document Number: ISRAE M/B LA-3711P | Rev 1.0

Date: Thursday, March 22, 2007 | Sheet 23 of 39

www.laptop-schematics.com

APA2056 SPK/HP Amplifier

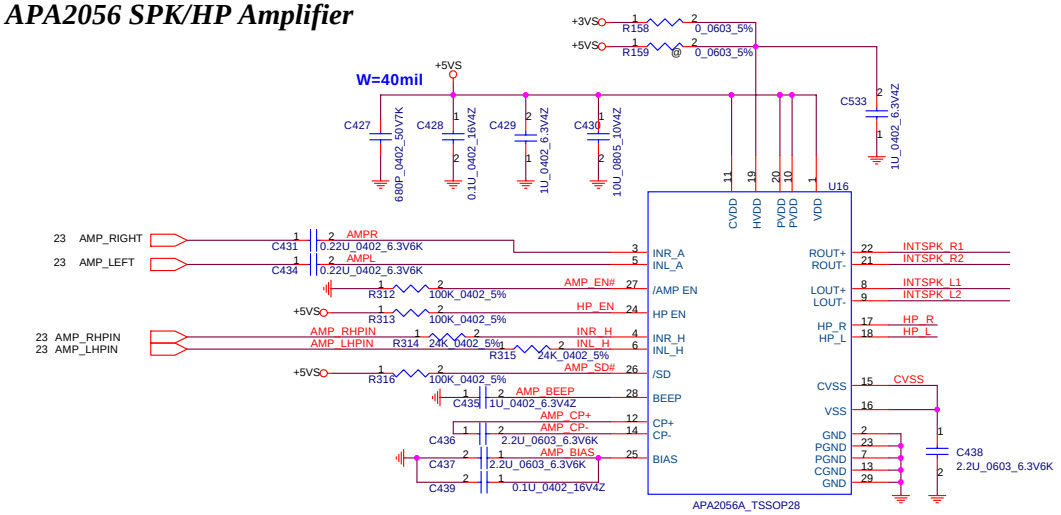

IN_A Gain = 10dB (Internal Speaker)
IN_H Gain = 0dB (Headphone)

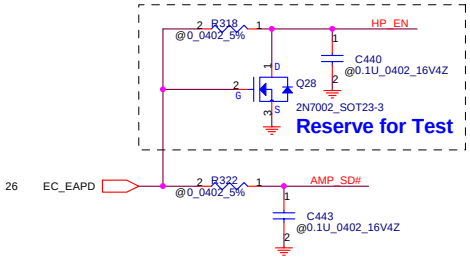

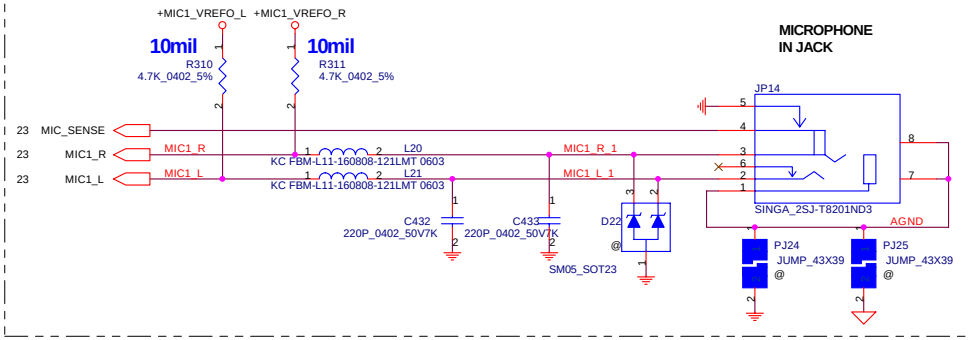

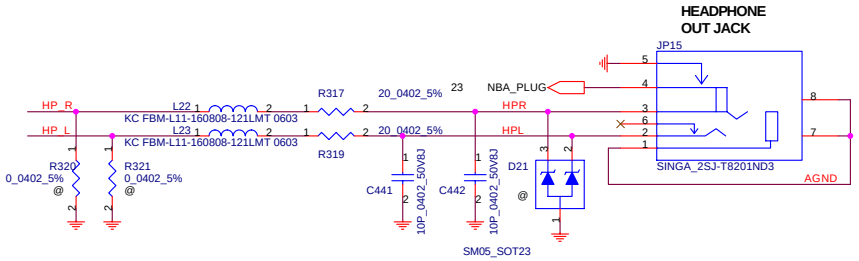

Volume Control

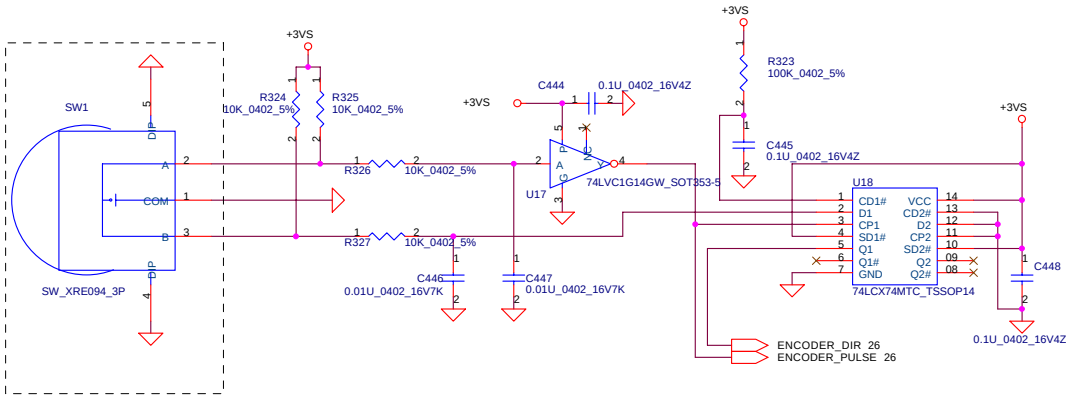

Right Speaker Connector

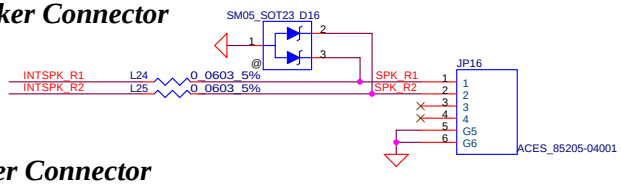

Left Speaker Connector

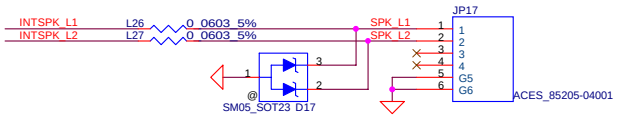

MP need to change P/N DEB00000600

Security Classification	Compal Secret Data		
Issued Date	2006/10/31	Deciphered Date	2009/11/13

THIS SHEET OF ENGINEERING DRAWING IS THE PROPRIETARY PROPERTY OF COMPAL ELECTRONICS, INC. AND CONTAINS CONFIDENTIAL AND TRADE SECRET INFORMATION. THIS SHEET MAY NOT BE TRANSFERED FROM THE CUSTODY OF THE COMPETENT DIVISION OF R&D DEPARTMENT EXCEPT AS AUTHORIZED BY COMPAL ELECTRONICS, INC. NEITHER THIS SHEET NOR THE INFORMATION IT CONTAINS MAY BE USED BY OR DISCLOSED TO ANY THIRD PARTY WITHOUT PRIOR WRITTEN CONSENT OF COMPAL ELECTRONICS, INC.

Compal Electronics, Inc.

Title: AMP/Volume Encoder/Audio Jack/MIC

Size: Custom | Document Number: ISRAE M/B LA-3711P | Rev: 1.0

Date: Thursday, March 22, 2007 | Sheet 24 of 39

www.laptop-schematics.com

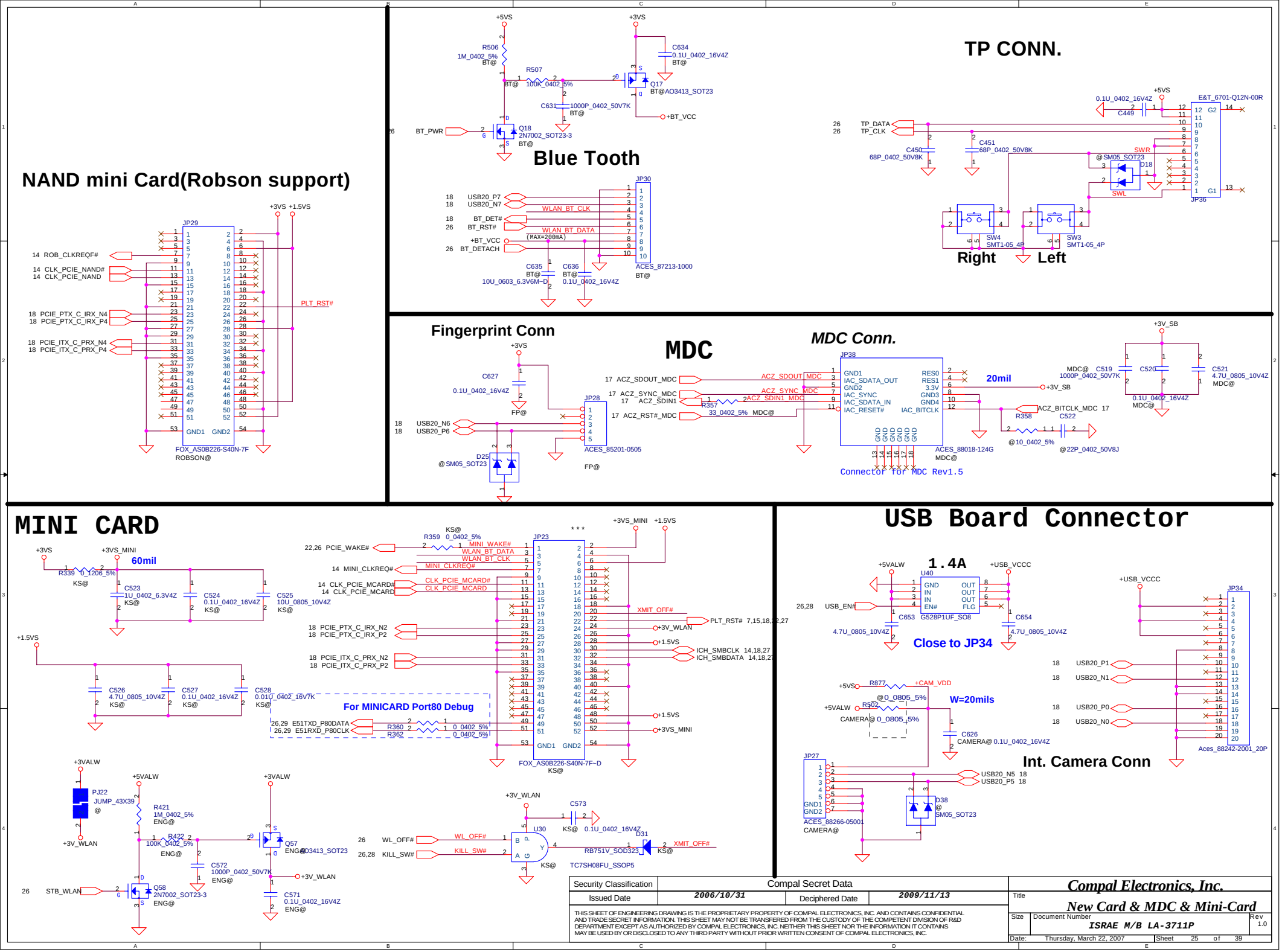

Security Classification	Compal Secret Data		
Issued Date	2006/10/31	Deciphered Date	2009/11/13

THIS SHEET OF ENGINEERING DRAWING IS THE PROPRIETARY PROPERTY OF COMPAL ELECTRONICS, INC. AND CONTAINS CONFIDENTIAL AND TRADE SECRET INFORMATION. THIS SHEET MAY NOT BE TRANSFERED FROM THE CUSTODY OF THE COMPETENT DIVISION OF R&D DEPARTMENT EXCEPT AS AUTHORIZED BY COMPAL ELECTRONICS, INC. NEITHER THIS SHEET NOR THE INFORMATION IT CONTAINS MAY BE USED BY OR DISCLOSED TO ANY THIRD PARTY WITHOUT PRIOR WRITTEN CONSENT OF COMPAL ELECTRONICS, INC.

Compal Electronics, Inc.

Title: New Card & MDC & Mini-Card

Size: | Document Number: ISRAE M/B LA-3711P | Rev: 1.0

Date: Thursday, March 22, 2007 | Sheet 25 of 39

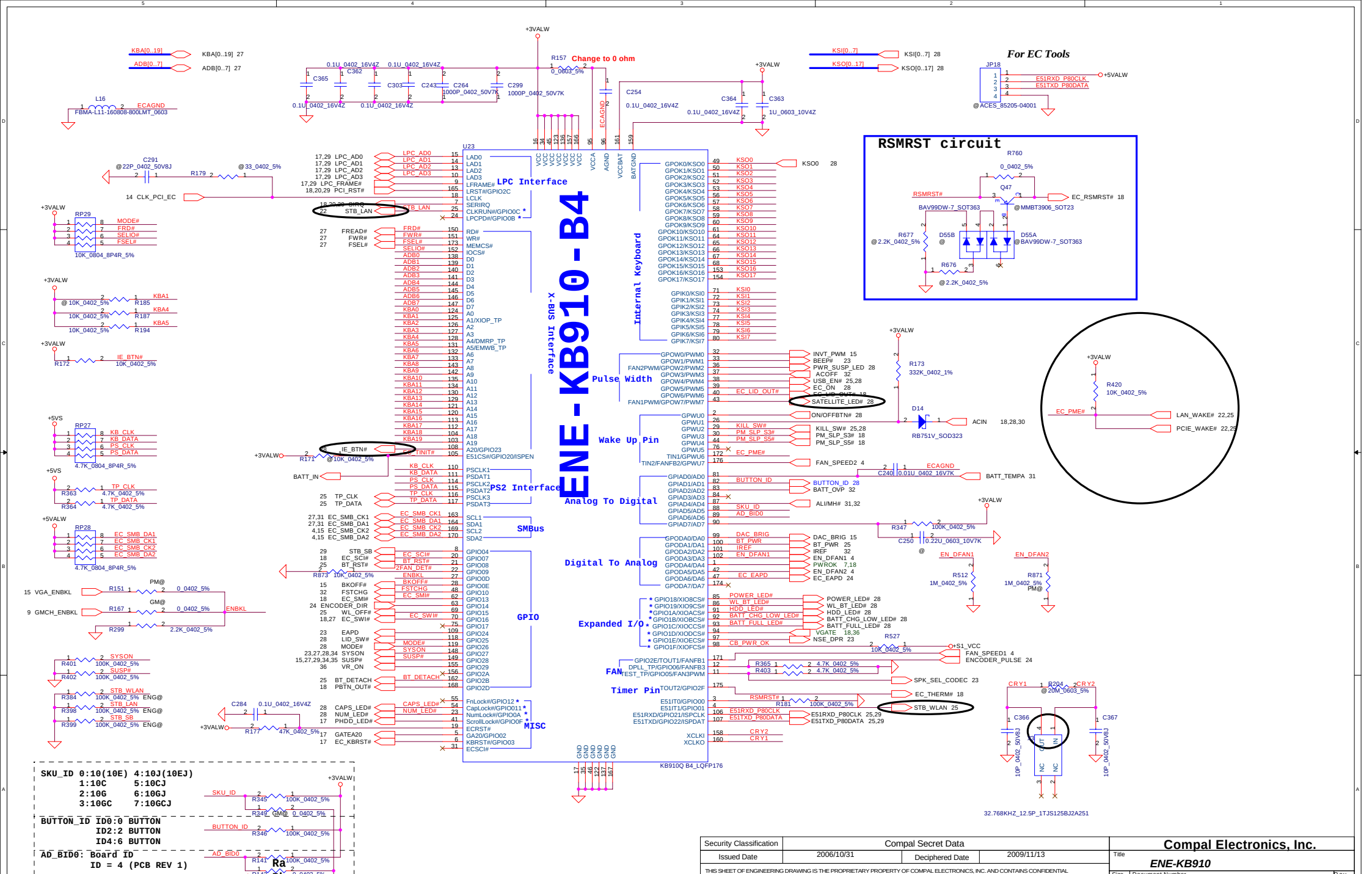

Security Classification	Compal Secret Data		
Issued Date	2006/10/31	Deciphered Date	2009/11/13

THIS SHEET OF ENGINEERING DRAWING IS THE PROPRIETARY PROPERTY OF COMPAL ELECTRONICS, INC. AND CONTAINS CONFIDENTIAL AND TRADE SECRET INFORMATION. THIS SHEET MAY NOT BE TRANSFERED FROM THE CUSTODY OF THE COMPETENT DIVISION OF R&D DEPARTMENT EXCEPT AS AUTHORIZED BY COMPAL ELECTRONICS, INC. NEITHER THIS SHEET NOR THE INFORMATION IT CONTAINS MAY BE USED BY OR DISCLOSED TO ANY THIRD PARTY WITHOUT PRIOR WRITTEN CONSENT OF COMPAL ELECTRONICS, INC.

Compal Electronics, Inc.

Title: *ENE-KB910*

Size | Document Number: *ISRAE M/B LA-3711P* | Rev 1.0

Date: Thursday, March 22, 2007 | Sheet 26 of 39

www.laptop-schematics.com

New Card

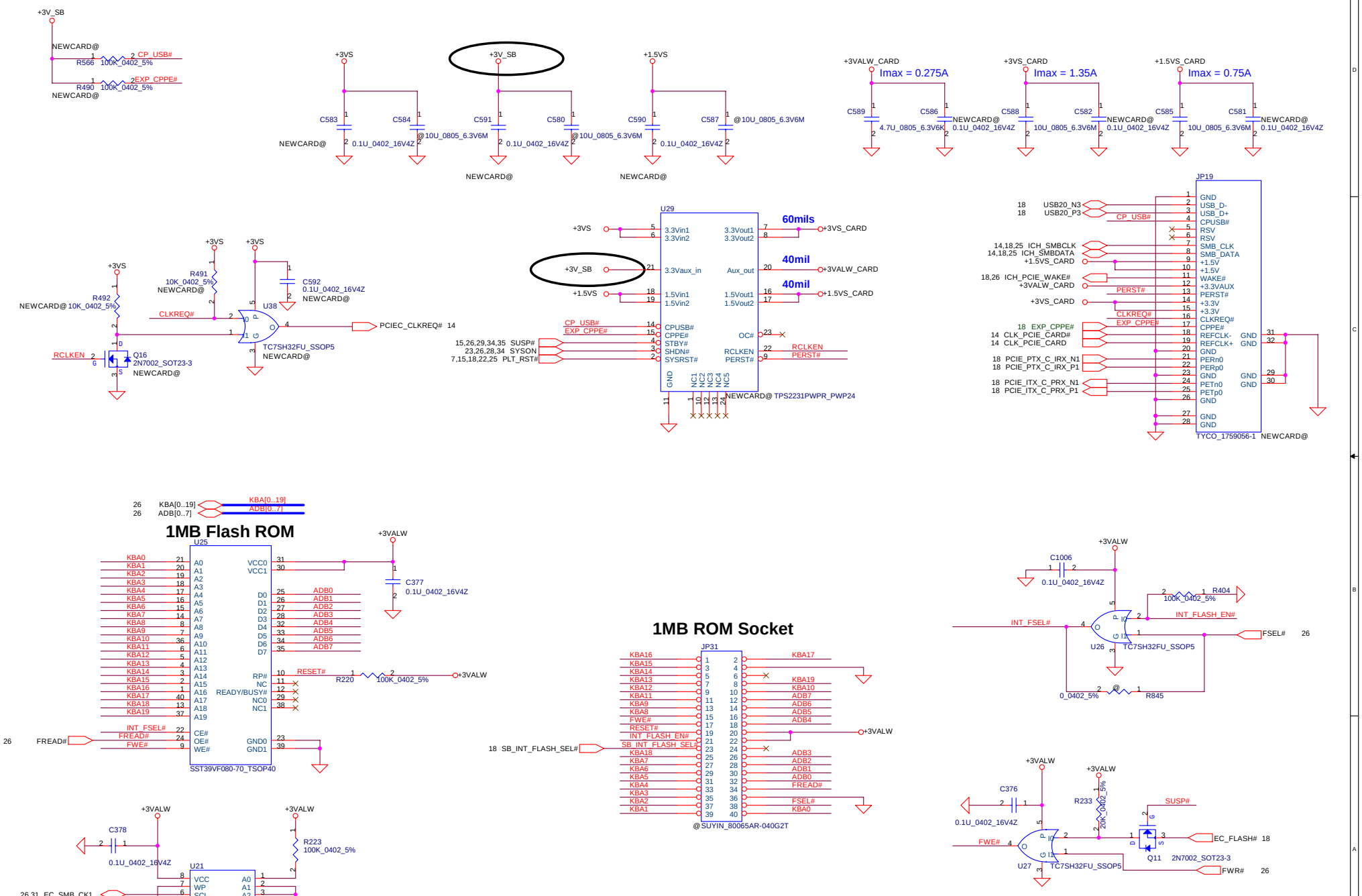

Security Classification	Compal Secret Data		
Issued Date	2006/11/05	Deciphered Date	2009/11/05

THIS SHEET OF ENGINEERING DRAWING IS THE PROPRIETARY PROPERTY OF COMPAL ELECTRONICS, INC. AND CONTAINS CONFIDENTIAL AND TRADE SECRET INFORMATION. THIS SHEET MAY NOT BE TRANSFERED FROM THE CUSTODY OF THE COMPETENT DIVISION OF R&D DEPARTMENT EXCEPT AS AUTHORIZED BY COMPAL ELECTRONICS, INC. NEITHER THIS SHEET NOR THE INFORMATION IT CONTAINS MAY BE USED BY OR DISCLOSED TO ANY THIRD PARTY WITHOUT PRIOR WRITTEN CONSENT OF COMPAL ELECTRONICS, INC.

Compal Electronics, Inc.

Title: BIOS/TP-PAD/BT

Size | Document Number: ISRAE M/B LA-3711P | Rev 1.0

Date: Thursday, March 22, 2007 | Sheet 27 of 39

www.laptop-schematics.com

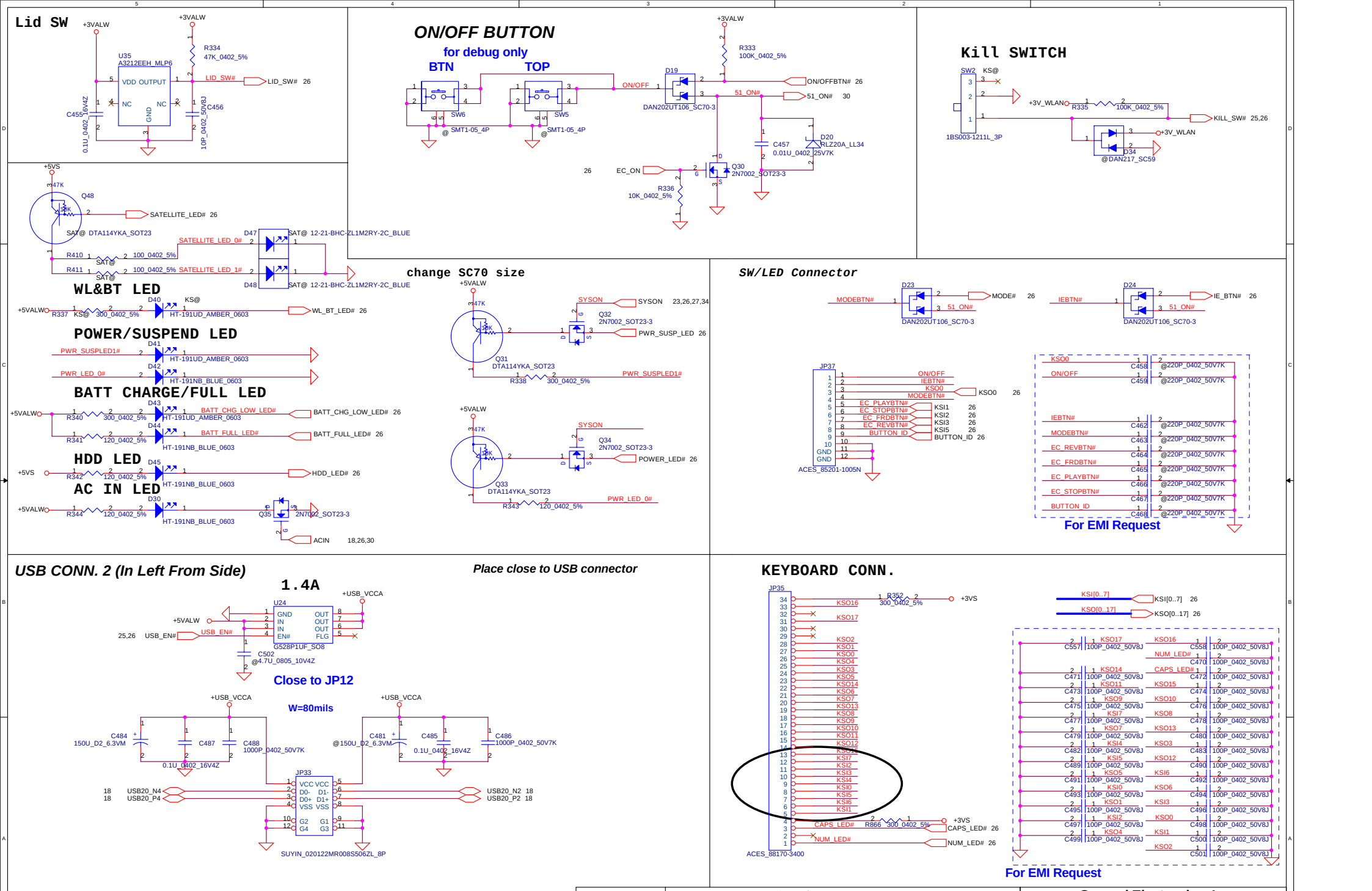

Security Classification	Compal Secret Data		
Issued Date	2006/10/31	Deciphered Date	2009/11/13

THIS SHEET OF ENGINEERING DRAWING IS THE PROPRIETARY PROPERTY OF COMPAL ELECTRONICS, INC. AND CONTAINS CONFIDENTIAL AND TRADE SECRET INFORMATION. THIS SHEET MAY NOT BE TRANSFERED FROM THE CUSTODY OF THE COMPETENT DIVISION OF R&D DEPARTMENT EXCEPT AS AUTHORIZED BY COMPAL ELECTRONICS, INC. NEITHER THIS SHEET NOR THE INFORMATION IT CONTAINS MAY BE USED BY OR DISCLOSED TO ANY THIRD PARTY WITHOUT PRIOR WRITTEN CONSENT OF COMPAL ELECTRONICS, INC.

Compal Electronics, Inc.

Title: USB/LID/KS/KB/LED/SW-B Conn

Size | Document Number: ISRAE M/B LA-3711P | Rev 1.0

Date: Thursday, March 22, 2007 | Sheet 28 of 39

www.laptop-schematics.com

New LPC Debug Pad ---- MB side

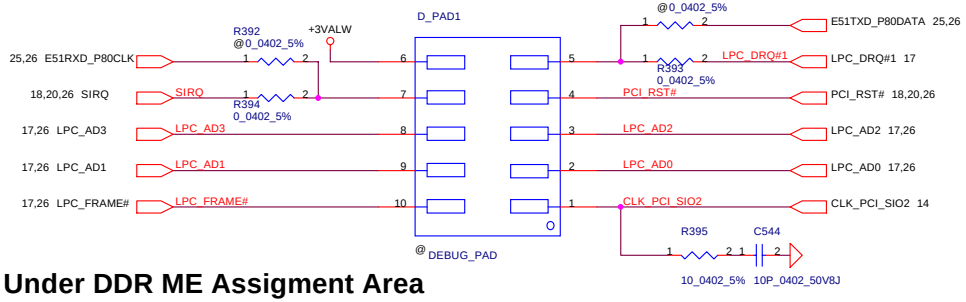

Under DDR ME Assigment Area

Keep Resistor near Debug Pad and in the same side

Reverse side DIMM ---- Pin 1 keep away DIMM

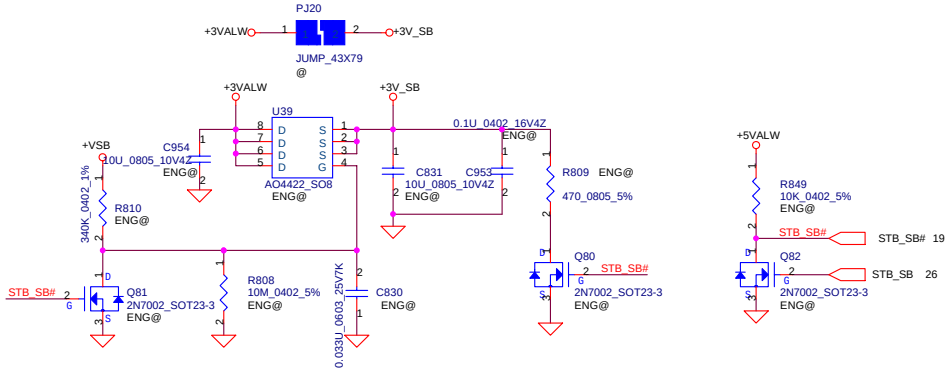

Screw Hole

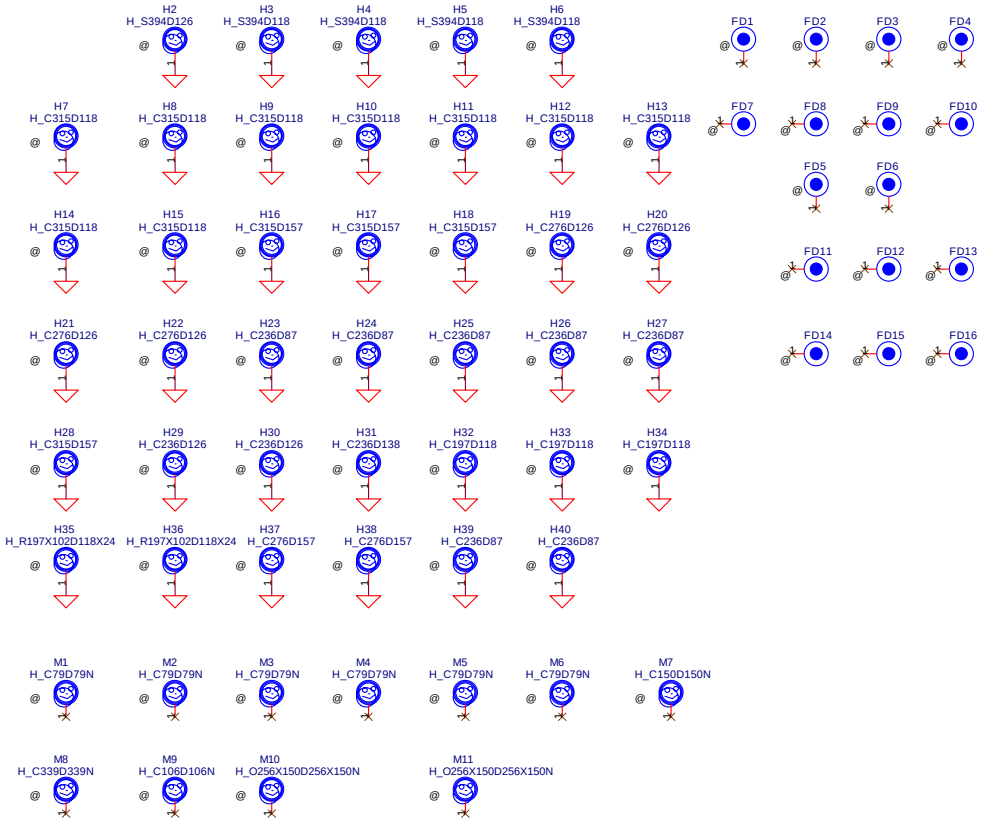

+5VALW to +5VS Transfer

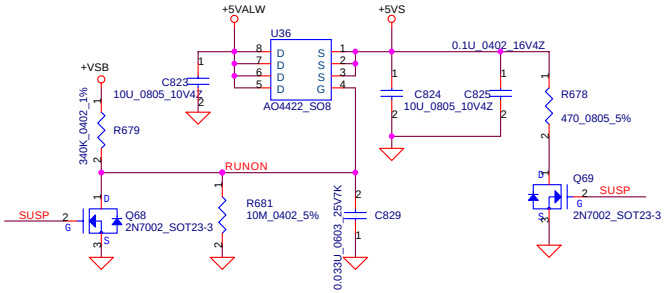

+1.8V to +1.8VS Transfer (Place close to VGA-Connector)

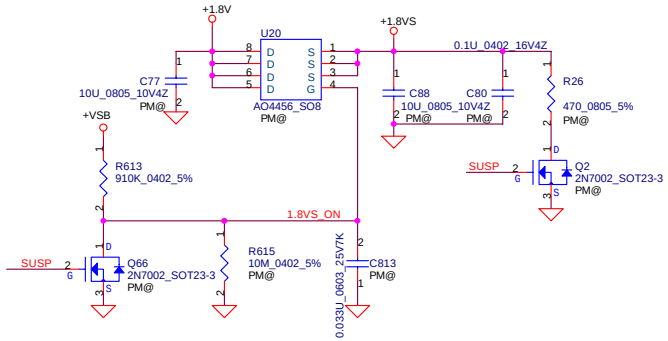

+3VALW to +3VS Transfer

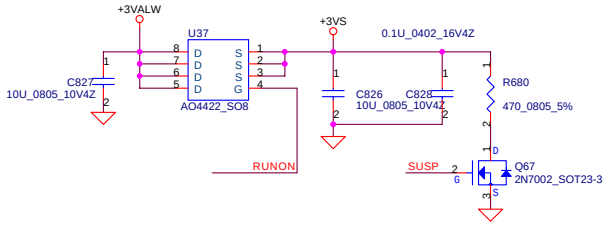

Discharge Circuit

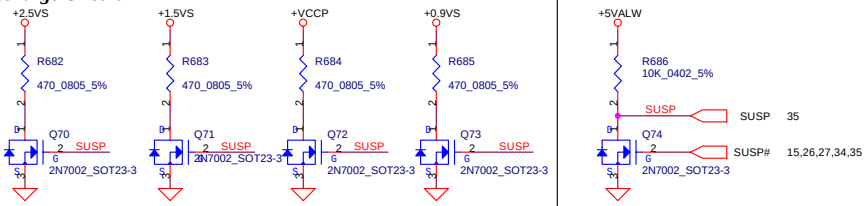

Security Classification	Compal Secret Data		
Issued Date	2006/10/31	Deciphered Date	2009/11/13

THIS SHEET OF ENGINEERING DRAWING IS THE PROPRIETARY PROPERTY OF COMPAL ELECTRONICS, INC. AND CONTAINS CONFIDENTIAL AND TRADE SECRET INFORMATION. THIS SHEET MAY NOT BE TRANSFERED FROM THE CUSTODY OF THE COMPETENT DIVISION OF R&D DEPARTMENT EXCEPT AS AUTHORIZED BY COMPAL ELECTRONICS, INC. NEITHER THIS SHEET NOR THE INFORMATION IT CONTAINS MAY BE USED BY OR DISCLOSED TO ANY THIRD PARTY WITHOUT PRIOR WRITTEN CONSENT OF COMPAL ELECTRONICS, INC.

Compal Electronics, Inc.

Title: **DC/DC I/F_Debug I/F_Screw**

Size: | Document Number: **ISRAE M/B LA-3711P** | Rev 1.0

Date: Thursday, March 22, 2007 | Sheet 29 of 39

www.laptop-schematics.com

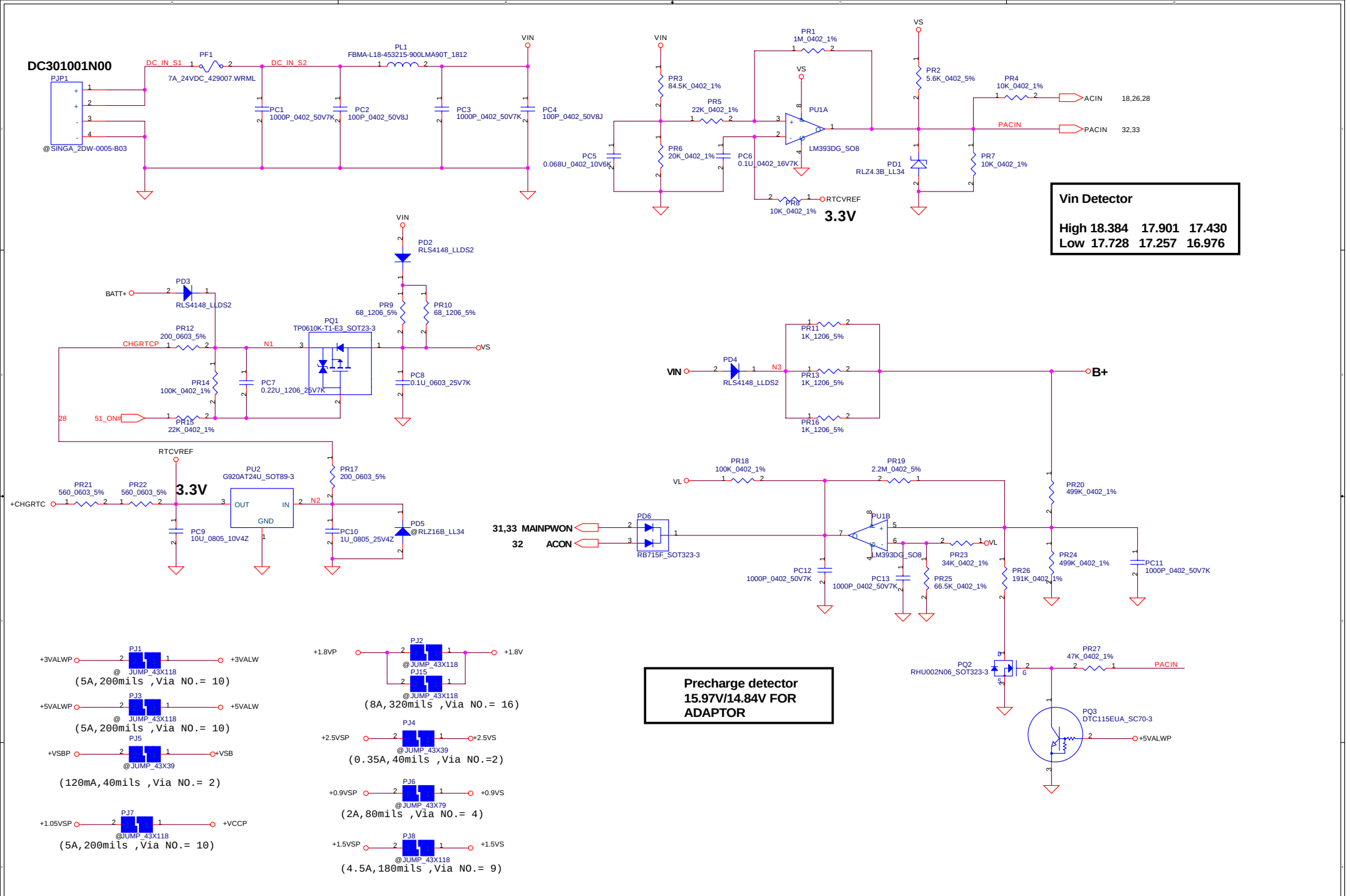

Security Classification	Compal Secret Data		
Issued Date	2006/06/06	Deciphered Date	2009/06/05

THIS SHEET OF ENGINEERING DRAWING IS THE PROPRIETARY PROPERTY OF COMPAL ELECTRONICS, INC. AND CONTAINS CONFIDENTIAL AND TRADE SECRET INFORMATION. THIS SHEET MAY NOT BE TRANSFERED FROM THE CUSTODY OF THE COMPETENT DIVISION OF R&D DEPARTMENT EXCEPT AS AUTHORIZED BY COMPAL ELECTRONICS, INC. NEITHER THIS SHEET NOR THE INFORMATION IT CONTAINS MAY BE USED BY OR DISCLOSED TO ANY THIRD PARTY WITHOUT PRIOR WRITTEN CONSENT OF COMPAL ELECTRONICS, INC.

Compal Electronics, Inc.

Title: DCIN & DETECTOR

Size | Document Number | Rev 1.0

Date: Thursday, March 22, 2007 | Sheet 30 of 39

www.laptop-schematics.com

PH1 under CPU botten side :
CPU thermal protection at 92 degree C
Recovery at 56 degree C

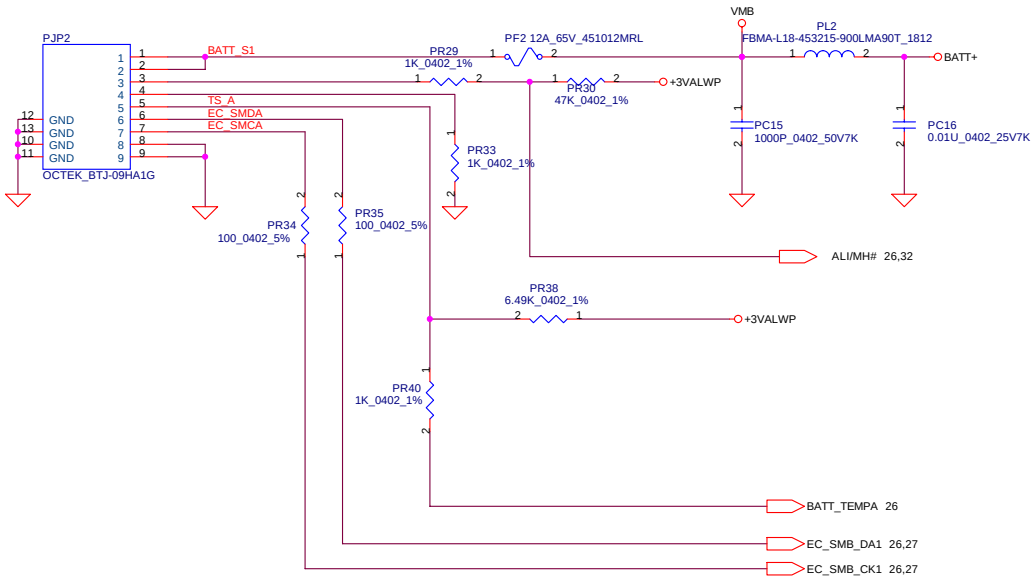

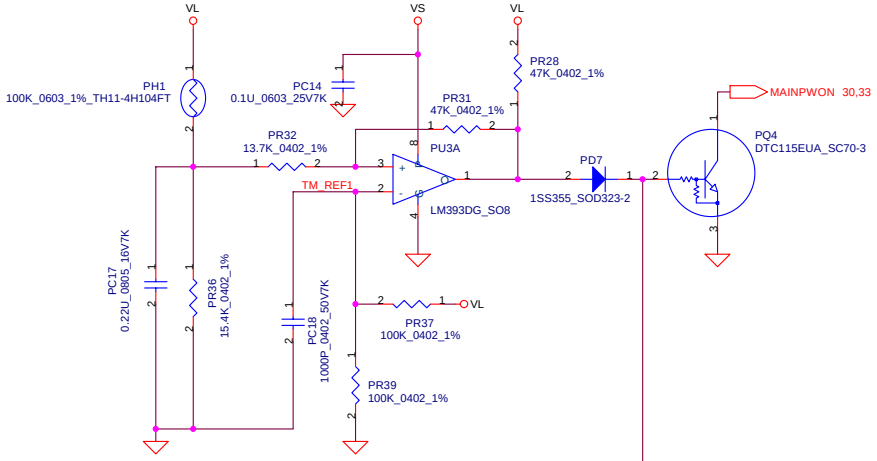

PH2 near main Battery CONN :
BAT. thermal protection at 79 degree C
Recovery at 45 degree C

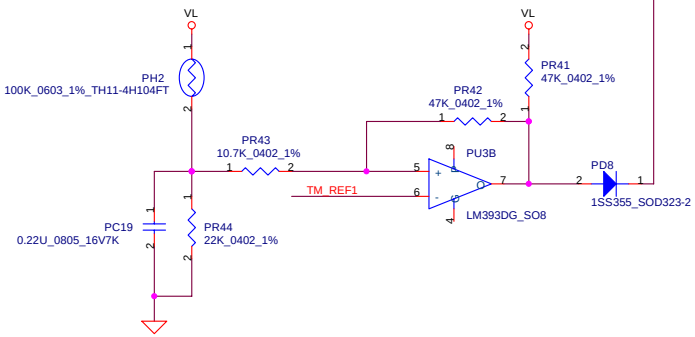

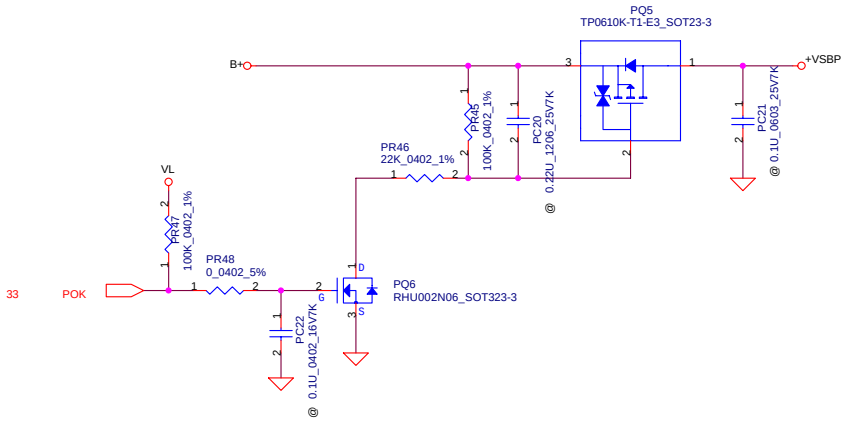

Security Classification	Compal Secret Data		
Issued Date	2006/06/06	Deciphered Date	2009/06/05

THIS SHEET OF ENGINEERING DRAWING IS THE PROPRIETARY PROPERTY OF COMPAL ELECTRONICS, INC. AND CONTAINS CONFIDENTIAL AND TRADE SECRET INFORMATION. THIS SHEET MAY NOT BE TRANSFERED FROM THE CUSTODY OF THE COMPETENT DIVISION OF R&D DEPARTMENT EXCEPT AS AUTHORIZED BY COMPAL ELECTRONICS, INC. NEITHER THIS SHEET NOR THE INFORMATION IT CONTAINS MAY BE USED BY OR DISCLOSED TO ANY THIRD PARTY WITHOUT PRIOR WRITTEN CONSENT OF COMPAL ELECTRONICS, INC.

Compal Electronics, Inc.

Title: BATTERY CONN / OTP

Size | Document Number | Rev 1.0

Date: Thursday, March 22, 2007 | Sheet 31 of 39

www.laptop-schematics.com

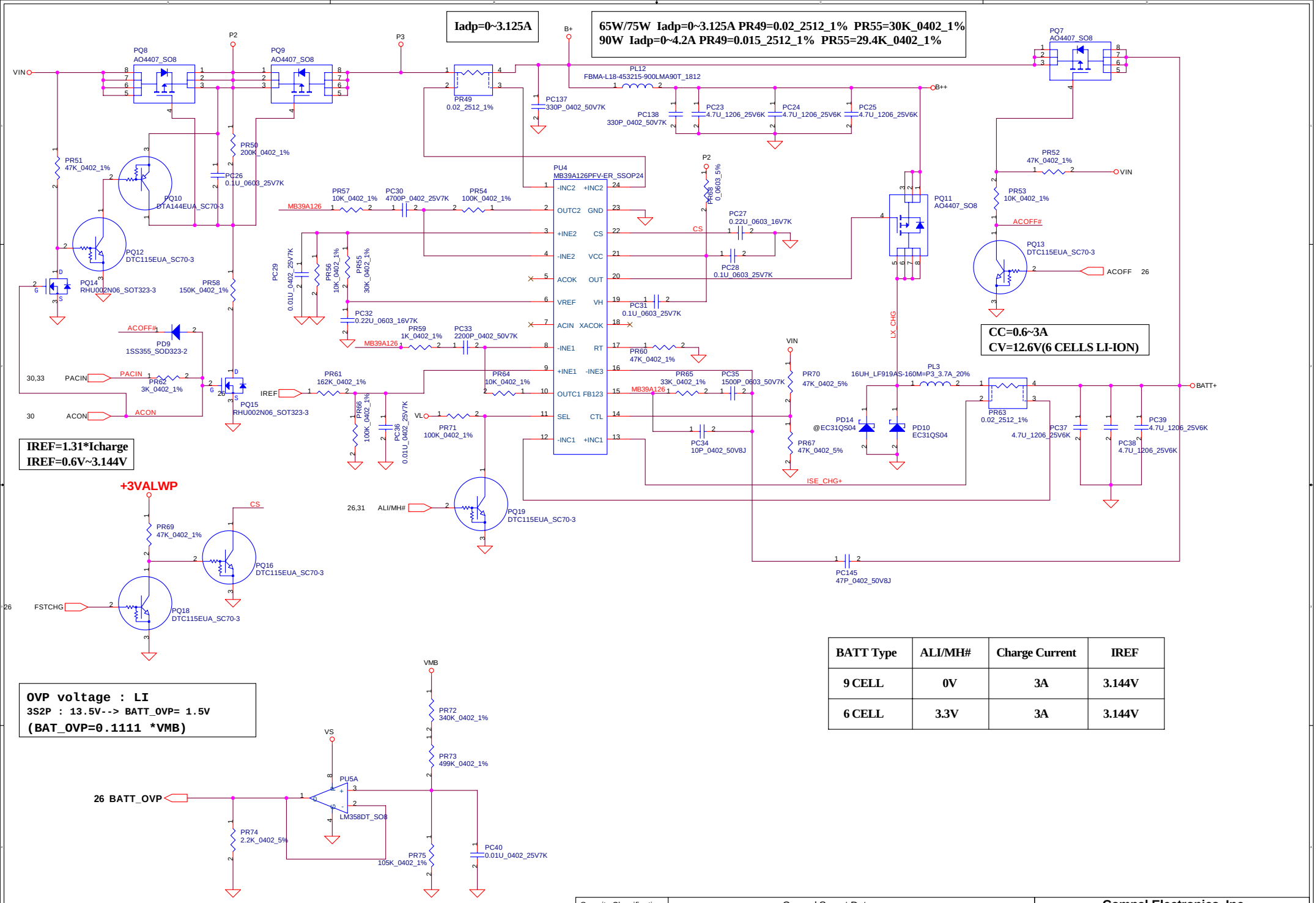

BATT Type	ALI/MH#	Charge Current	IREF
9 CELL	0V	3A	3.144V
6 CELL	3.3V	3A	3.144V

Security Classification	Compal Secret Data		
Issued Date	2006/06/06	Deciphered Date	2009/06/05

THIS SHEET OF ENGINEERING DRAWING IS THE PROPRIETARY PROPERTY OF COMPAL ELECTRONICS, INC. AND CONTAINS CONFIDENTIAL AND TRADE SECRET INFORMATION. THIS SHEET MAY NOT BE TRANSFERED FROM THE CUSTODY OF THE COMPETENT DIVISION OF R&D DEPARTMENT EXCEPT AS AUTHORIZED BY COMPAL ELECTRONICS, INC. NEITHER THIS SHEET NOR THE INFORMATION IT CONTAINS MAY BE USED BY OR DISCLOSED TO ANY THIRD PARTY WITHOUT PRIOR WRITTEN CONSENT OF COMPAL ELECTRONICS, INC.

Compal Electronics, Inc.

Title: CHARGER

Size | Document Number | Rev 1.0

Date: Thursday, March 22, 2007 | Sheet 32 of 39

www.laptop-schematics.com

+3.3VALWP/+5VALWP

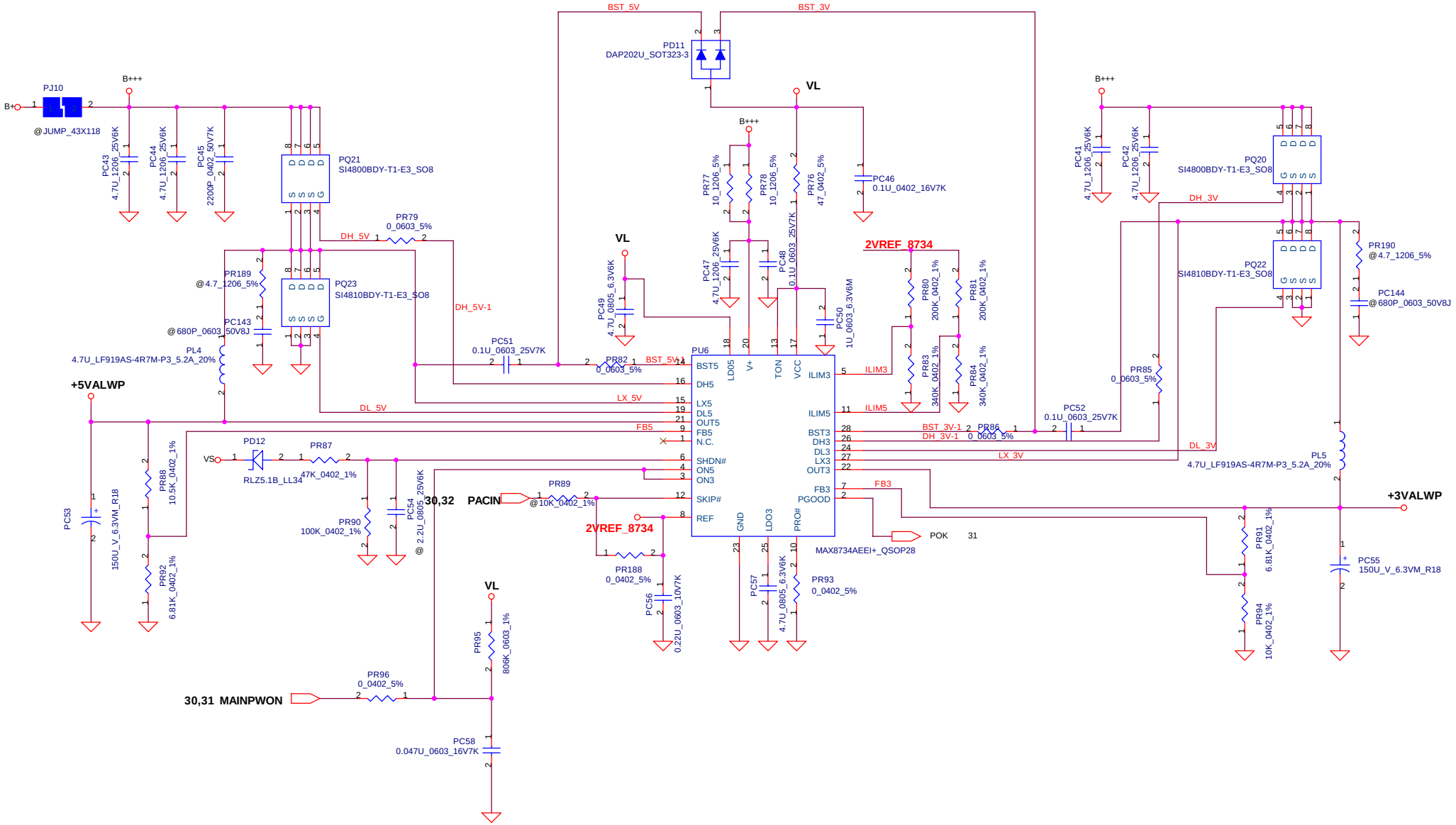

Security Classification	Compal Secret Data		
Issued Date	2006/06/06	Deciphered Date	2009/06/05

THIS SHEET OF ENGINEERING DRAWING IS THE PROPRIETARY PROPERTY OF COMPAL ELECTRONICS, INC. AND CONTAINS CONFIDENTIAL AND TRADE SECRET INFORMATION. THIS SHEET MAY NOT BE TRANSFERED FROM THE CUSTODY OF THE COMPETENT DIVISION OF R&D DEPARTMENT EXCEPT AS AUTHORIZED BY COMPAL ELECTRONICS, INC. NEITHER THIS SHEET NOR THE INFORMATION IT CONTAINS MAY BE USED BY OR DISCLOSED TO ANY THIRD PARTY WITHOUT PRIOR WRITTEN CONSENT OF COMPAL ELECTRONICS, INC.

Compal Electronics, Inc.

Title: +5V/+3V

Size: Custom | Document Number: IAKAA M/B LA-3401P | Rev: 1.0

Date: Thursday, March 22, 2007 | Sheet 33 of 39

www.laptop-schematics.com

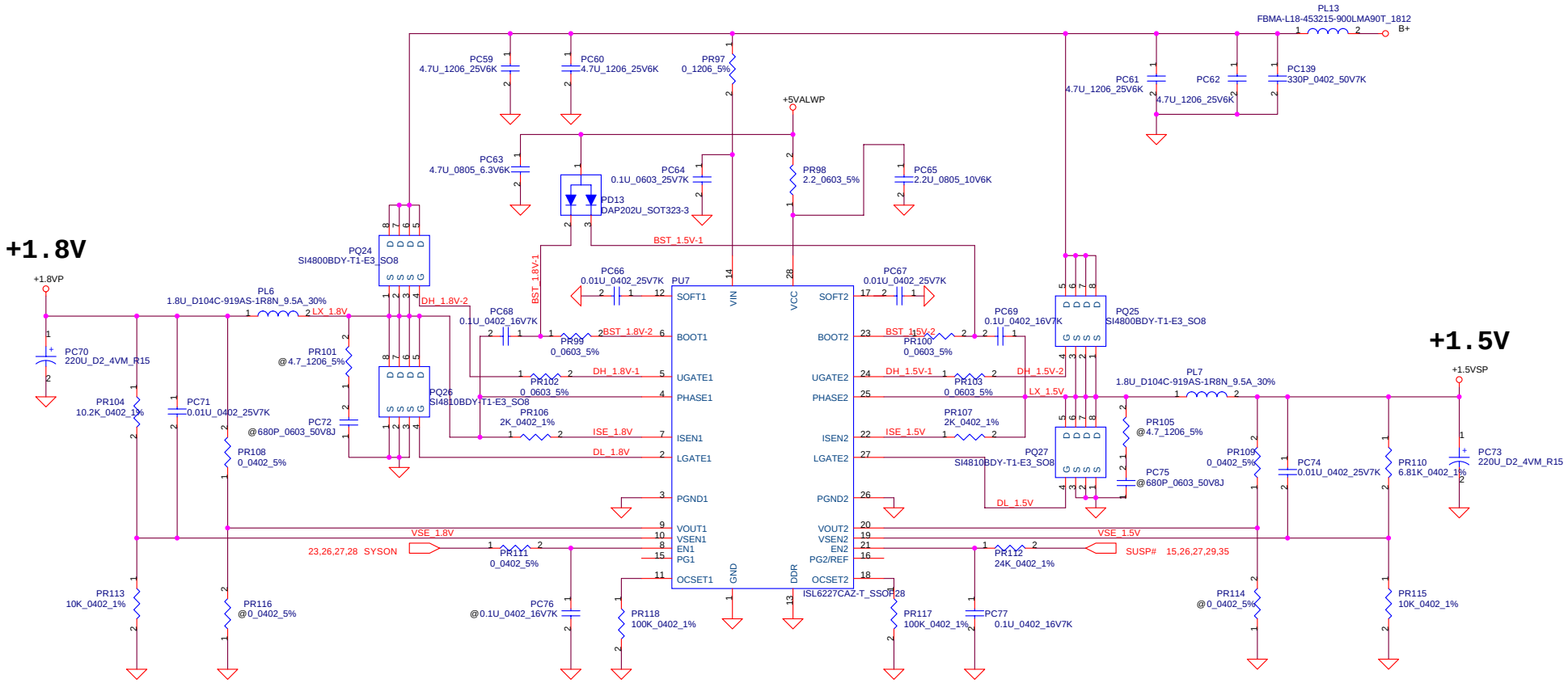

Security Classification	Compal Secret Data		
Issued Date	2006/06/06	Deciphered Date	2009/06/05

THIS SHEET OF ENGINEERING DRAWING IS THE PROPRIETARY PROPERTY OF COMPAL ELECTRONICS, INC. AND CONTAINS CONFIDENTIAL AND TRADE SECRET INFORMATION. THIS SHEET MAY NOT BE TRANSFERED FROM THE CUSTODY OF THE COMPETENT DIVISION OF R&D DEPARTMENT EXCEPT AS AUTHORIZED BY COMPAL ELECTRONICS, INC. NEITHER THIS SHEET NOR THE INFORMATION IT CONTAINS MAY BE USED BY OR DISCLOSED TO ANY THIRD PARTY WITHOUT PRIOR WRITTEN CONSENT OF COMPAL ELECTRONICS, INC.

Compal Electronics, Inc.

Title: 1.8V / 1.5V

Size | Document Number | Rev 1.0

Date: Thursday, March 22, 2007 | Sheet 34 of 39

www.laptop-schematics.com

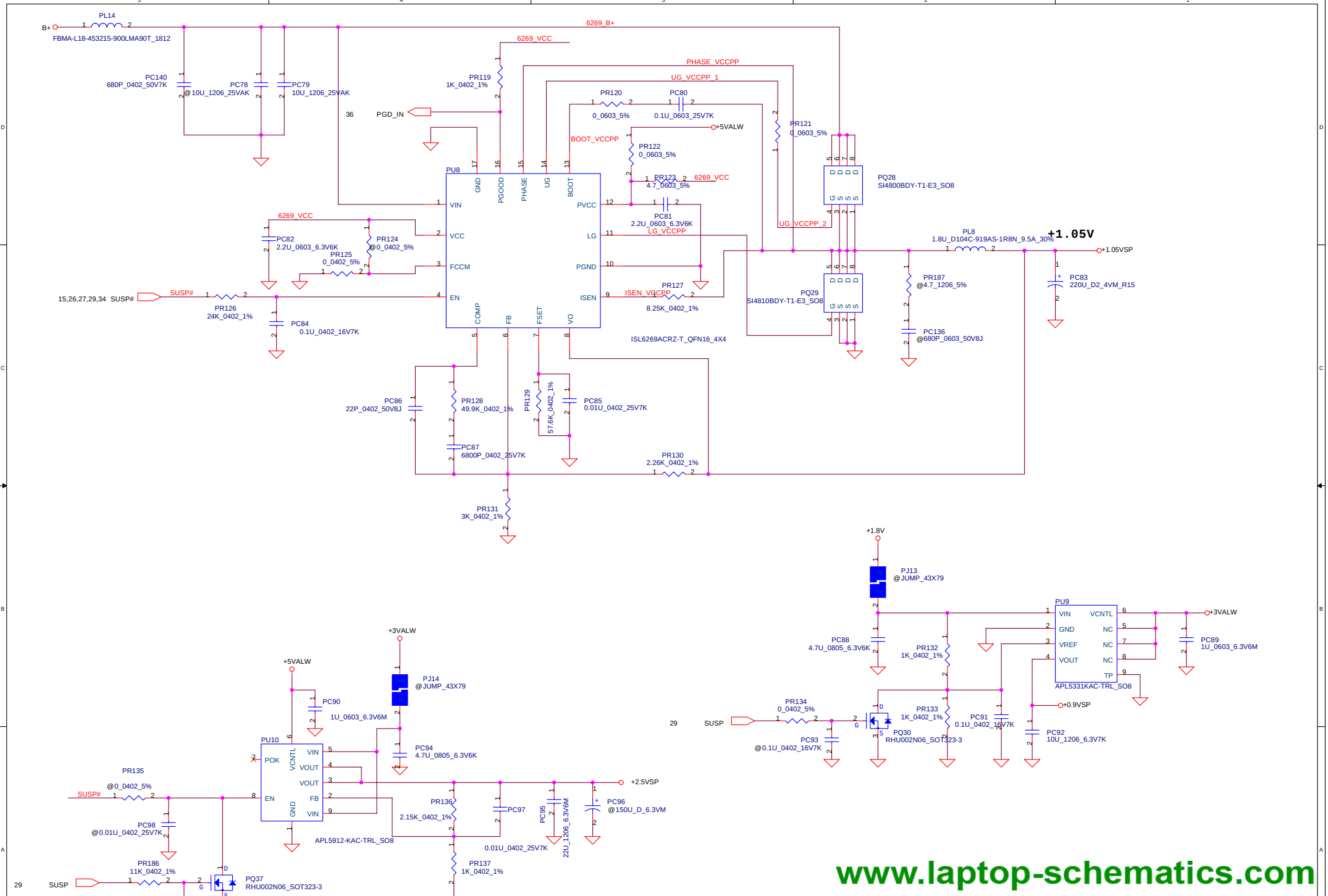

www.laptop-schematics.com

Security Classification	Compal Secret Data		
Issued Date	2006/06/06	Deciphered Date	2009/06/05

THIS SHEET OF ENGINEERING DRAWING IS THE PROPRIETARY PROPERTY OF COMPAL ELECTRONICS, INC. AND CONTAINS CONFIDENTIAL AND TRADE SECRET INFORMATION. THIS SHEET MAY NOT BE TRANSFERED FROM THE CUSTODY OF THE COMPETENT DIVISION OF R&D DEPARTMENT EXCEPT AS AUTHORIZED BY COMPAL ELECTRONICS, INC. NEITHER THIS SHEET NOR THE INFORMATION IT CONTAINS MAY BE USED BY OR DISCLOSED TO ANY THIRD PARTY WITHOUT PRIOR WRITTEN CONSENT OF COMPAL ELECTRONICS, INC.

Compal Electronics, Inc.

Title: 2.5V / 0.9V / 1.05V

Size | Document Number | Rev 1.0

Date: Thursday, March 22, 2007 | Sheet 35 of 39

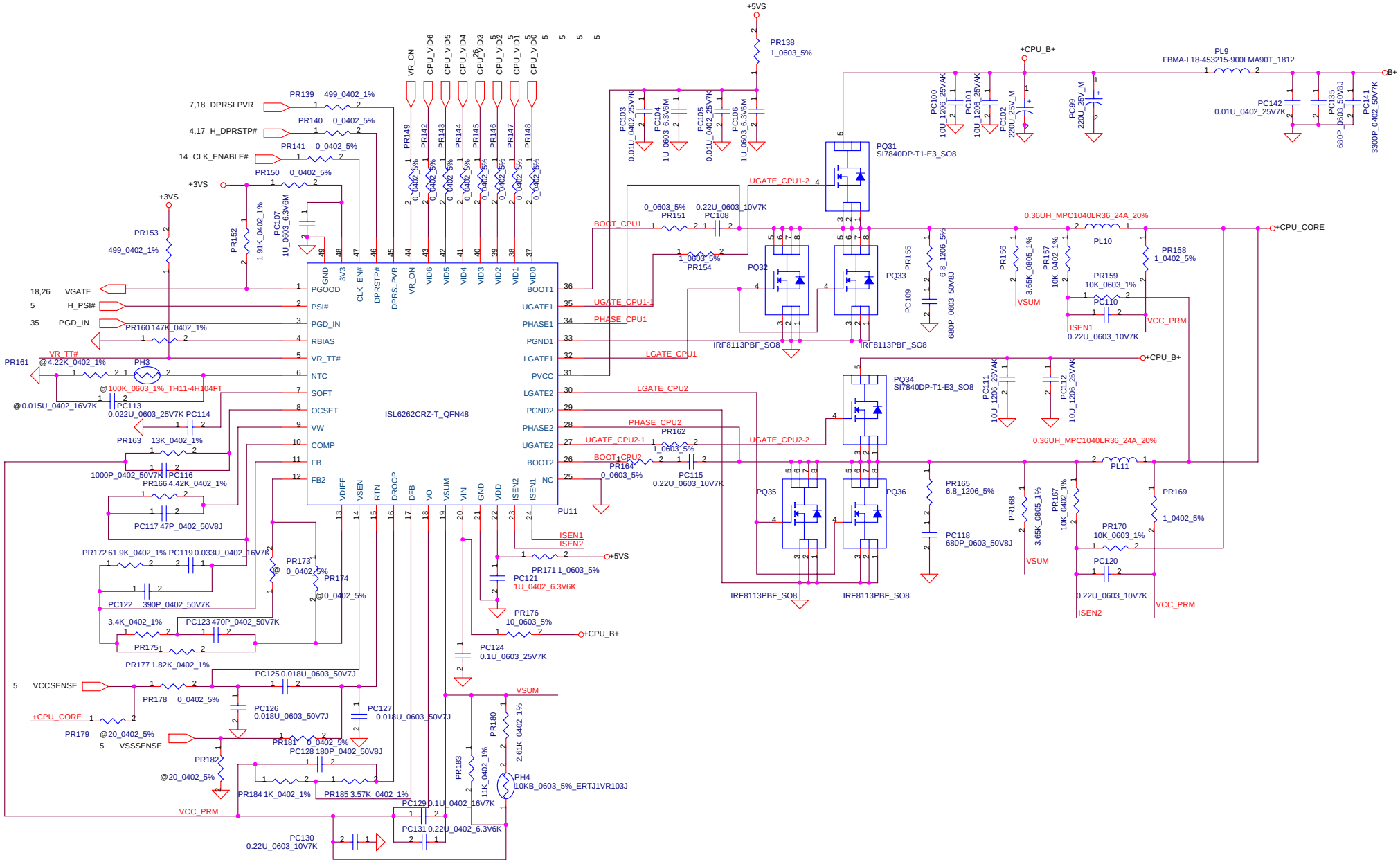

www.laptop-schematics.com

Security Classification	Compal Secret Data		
Issued Date	2006/06/06	Deciphered Date	2009/06/05

THIS SHEET OF ENGINEERING DRAWING IS THE PROPRIETARY PROPERTY OF COMPAL ELECTRONICS, INC. AND CONTAINS CONFIDENTIAL AND TRADE SECRET INFORMATION. THIS SHEET MAY NOT BE TRANSFERED FROM THE CUSTODY OF THE COMPETENT DIVISION OF R&D DEPARTMENT EXCEPT AS AUTHORIZED BY COMPAL ELECTRONICS, INC. NEITHER THIS SHEET NOR THE INFORMATION IT CONTAINS MAY BE USED BY OR DISCLOSED TO ANY THIRD PARTY WITHOUT PRIOR WRITTEN CONSENT OF COMPAL ELECTRONICS, INC.

Compal Electronics, Inc.

Title: **+CPU_CORE**

Size: Custom | Document Number | Rev: 1.0

Date: Thursday, March 22, 2007 | Sheet 36 of 39

HW4 Product Improvement Record (P.I.R.)

Phase: B to C		Date: 2007/01/24			Writer: Timo Teng		
Page#	Action Plan (add; del; change)	Location or Net_List	Before value (Attached file)	After value (Attached file)	Detail Discretion and Root Cause	Rev.	DL/DM Check
P17	Change Connector	JP24	SUYIN_06802-TK102	SUYIN_127043FB 022G345ZR_NR	Change layout footprint	0.2	
P18	Delete Component	R873 R874	100K_0402_5%	NC	All sku keep 5 in 1 and 1394 functions		
P22	Delete Component	R820	10K_0402_5%	NC	No need more than one pull-high resistor on the net		
P25	Delete Component	R195	10K_0402_5%	NC	No need more than one pull-high resistor on the net		
P26	Delete Component	Q65/Q77 R821/R822	MMBT3904/10K_0402_5%	NC	No engine start, so follow Dallas project.		
P20	Change net	R234	Connects to +3VS	Connects to +5VS	Blue LED needs to connect 5V		
P24	Modify footprint	JP14/JP15	SINGA_2SJ-S351	SINGA_2SJ-T820	For solving SMT soldering poor issue		
P25	Delete Component	U38/R503/C630	CIR/100_0805/4.7U	NC	No CIR support on spec.		
P26	Add Component	R873/2FAN_DET#	NC	10K_0402/2FAN_DET#	For separate ISRAE&ISKAE EC BIOS		
P28	Modify component	R410/R411	200_0402_5%	100_0402_5%	Emonoto-san request, the LEDs increase brigtness		
P28	Modify BOM Select	Q48/R410/R411/D47/D48	NC	SAT@	Reserve Satelliate LED BOM select		
P29	Modify R Value	R613	820K_0402_1%	910K_0402_5%	For delaying and adjusting 1.8VS power sequence		
P22	Change Value	C89, C79, C90 C68, C74, C81	0.01uF_0402	0.1uF_0402	For solving EMI noise		

Phase: C to PreMP		Date: 2007/02/02			Writer: Timo Teng		
Page#	Action Plan (add; del; change)	Location or Net_List	Before value (Attached file)	After value (Attached file)	Detail Discretion and Root Cause		
P18	Add Component	R874/R875	NC	@1K_0402/@100K_0402	Reserve Satellite LDE detected	1.0	
P27	Modify component	C584/C580/C587	10uF_0805_6.3V	@10uF_0805_6.3V	For Cost reduce (PVT cut-in)		
P11	Modify component	C716	330uF_D2E_2.5V	@330uF_D2E_2.5V	For Cost reduce (PVT cut-in)		
P23	Modify component	C425	4.7uF_0805_10V	@4.7uF_0805_10V	For Cost reduce (PVT cut-in)		

www.laptop-schematics.com

Security Classification	Compal Secret Data			Compal Electronics, Inc.
Issued Date	2005/06/23	Deciphered Date	2006/10/22	Title: PIR

THIS SHEET OF ENGINEERING DRAWING IS THE PROPRIETARY PROPERTY OF COMPAL ELECTRONICS, INC. AND CONTAINS CONFIDENTIAL AND TRADE SECRET INFORMATION. THIS SHEET MAY NOT BE TRANSFERED FROM THE CUSTODY OF THE COMPETENT DIVISION OF R&D DEPARTMENT EXCEPT AS AUTHORIZED BY COMPAL ELECTRONICS, INC. NEITHER THIS SHEET NOR THE INFORMATION IT CONTAINS MAY BE USED BY OR DISCLOSED TO ANY THIRD PARTY WITHOUT PRIOR WRITTEN CONSENT OF COMPAL ELECTRONICS, INC.

Size	Document Number	Rev
Custom		1.0

Date: Thursday, March 22, 2007 Sheet 37 of 39

PIR (Product Improve Record)

FOR ISPD

LAN

U7
RTL8101E
100M@

TRANSFORMER

U34
NS892404
100M@

PCB

ZZZ1
PCB ZKU LA-3711P REV0

Card BUS

U8
8402
8402@

SB

U2
ICH7
ICH7R1@

NB

U6
945GM
GMR3@

U6
943GML
GMLR3@

U6
945GM
GMR1@

U6
943GML
GMLR1@

U6
945PM
PMR1@

SKU ID

R349
18K_0402_5%
PM@

www.laptop-schematics.com

Security Classification	Compal Secret Data		
Issued Date	2006/10/03	Deciphered Date	2009/11/13

THIS SHEET OF ENGINEERING DRAWING IS THE PROPRIETARY PROPERTY OF COMPAL ELECTRONICS, INC. AND CONTAINS CONFIDENTIAL AND TRADE SECRET INFORMATION. THIS SHEET MAY NOT BE TRANSFERED FROM THE CUSTODY OF THE COMPETENT DIVISION OF R&D DEPARTMENT EXCEPT AS AUTHORIZED BY COMPAL ELECTRONICS, INC. NEITHER THIS SHEET NOR THE INFORMATION IT CONTAINS MAY BE USED BY OR DISCLOSED TO ANY THIRD PARTY WITHOUT PRIOR WRITTEN CONSENT OF COMPAL ELECTRONICS, INC.

Compal Electronics, Inc.

Title: *ISPD*

Size | Document Number: *ISRAE M/B LA-3711P* | Rev 1.0

Date: Thursday, March 22, 2007 | Sheet 38 of 39

POWER PIR LIST

	page	Reason for change	Modify list
DVT	35	Change +1.05V PWM IC	Change PU8 to ISL6269A(SA00000GU80), add PR122 (0ohm, SD013000080)
	36	For EMI team request to add snubber and gate resistor	Add snuber PR155,PR165(6.8ohm_SD011680B80), PC109,PC118(680p_SE024681J80) and gate resistor PR154,PR162(1ohm_SD013100B80)
		Modify the CUP CORE load line and compensation	Change PC103 to 0.022u(SE076223K80), PC104 to 2.2u(SE107225K80), PR185 to 4.42K(SD000004J80), PC129 to 0.1u(SE076104K80, add PC126 (0.018U_SE025183J80), delete PC105 and PC106
	31	Modify the CPU OTP point from 84 degC to 87 degC for thermal team request	Change PR36 from 22K to 20K(SD034200280)
PVT	32,34, 35,36	For EMI team request to add bead to reduce board band	Add PL12,PL13,PL14(SM010020720);PC137,PC138,PC139(330p_SE074331K80);PC140(680p_SE074681K80);PC141(3300p_SE074332K80)
	33	Reduce the power consumption on S3/S4	Add PR188(0_0402_5%) and unpop PR89
	36	Solve the high frequency noise.	Change PC99 from 100U to 220U(SF22004M210)
Pre-MP	36	For EMI solution	Add PC142 (0.01u_0402)
	36	PC99 was interfere with logic low so change to small size	Change PC99 from 220U to 100U and add PC143,PC144(68U_25V).

www.laptop-schematics.com

Security Classification	Compal Secret Data		
Issued Date	2005/06/23	Deciphered Date	2006/10/22

THIS SHEET OF ENGINEERING DRAWING IS THE PROPRIETARY PROPERTY OF COMPAL ELECTRONICS, INC. AND CONTAINS CONFIDENTIAL AND TRADE SECRET INFORMATION. THIS SHEET MAY NOT BE TRANSFERED FROM THE CUSTODY OF THE COMPETENT DIVISION OF R&D DEPARTMENT EXCEPT AS AUTHORIZED BY COMPAL ELECTRONICS, INC. NEITHER THIS SHEET NOR THE INFORMATION IT CONTAINS MAY BE USED BY OR DISCLOSED TO ANY THIRD PARTY WITHOUT PRIOR WRITTEN CONSENT OF COMPAL ELECTRONICS, INC.

Compal Electronics, Inc.

Title: PIR

Size: Custom | Document Number | Rev: 1.0

Date: Thursday, March 22, 2007 | Sheet 39 of 39