NBWAA

Low Cost Los Angeles 10L

LA-5821P REV 1.0 Schematics

Intel Penryn/ Cantiga/ ICH9M

2008-08-10 Rev. 1.0

Security Classification	Compal Secret Data		
Issued Date	2009/07/28	Deciphered Date	2010/07/28

THIS SHEET OF ENGINEERING DRAWING IS THE PROPRIETARY PROPERTY OF COMPAL ELECTRONICS, INC. AND CONTAINS CONFIDENTIAL AND TRADE SECRET INFORMATION. THIS SHEET MAY NOT BE TRANSFERED FROM THE CUSTODY OF THE COMPETENT DIVISION OF R&D DEPARTMENT EXCEPT AS AUTHORIZED BY COMPAL ELECTRONICS, INC. NEITHER THIS SHEET NOR THE INFORMATION IT CONTAINS MAY BE USED BY OR DISCLOSED TO ANY THIRD PARTY WITHOUT PRIOR WRITTEN CONSENT OF COMPAL ELECTRONICS, INC.

Compal Electronics, Inc.

Title	Cover Page	
Size	Document Number: NBWAA LA5821P M/B	Rev 1.0
Date: Thursday, August 06, 2009	Sheet 1 of 41	

Compal Confidential

Model Name : NBWAA
File Name : LA-5821P

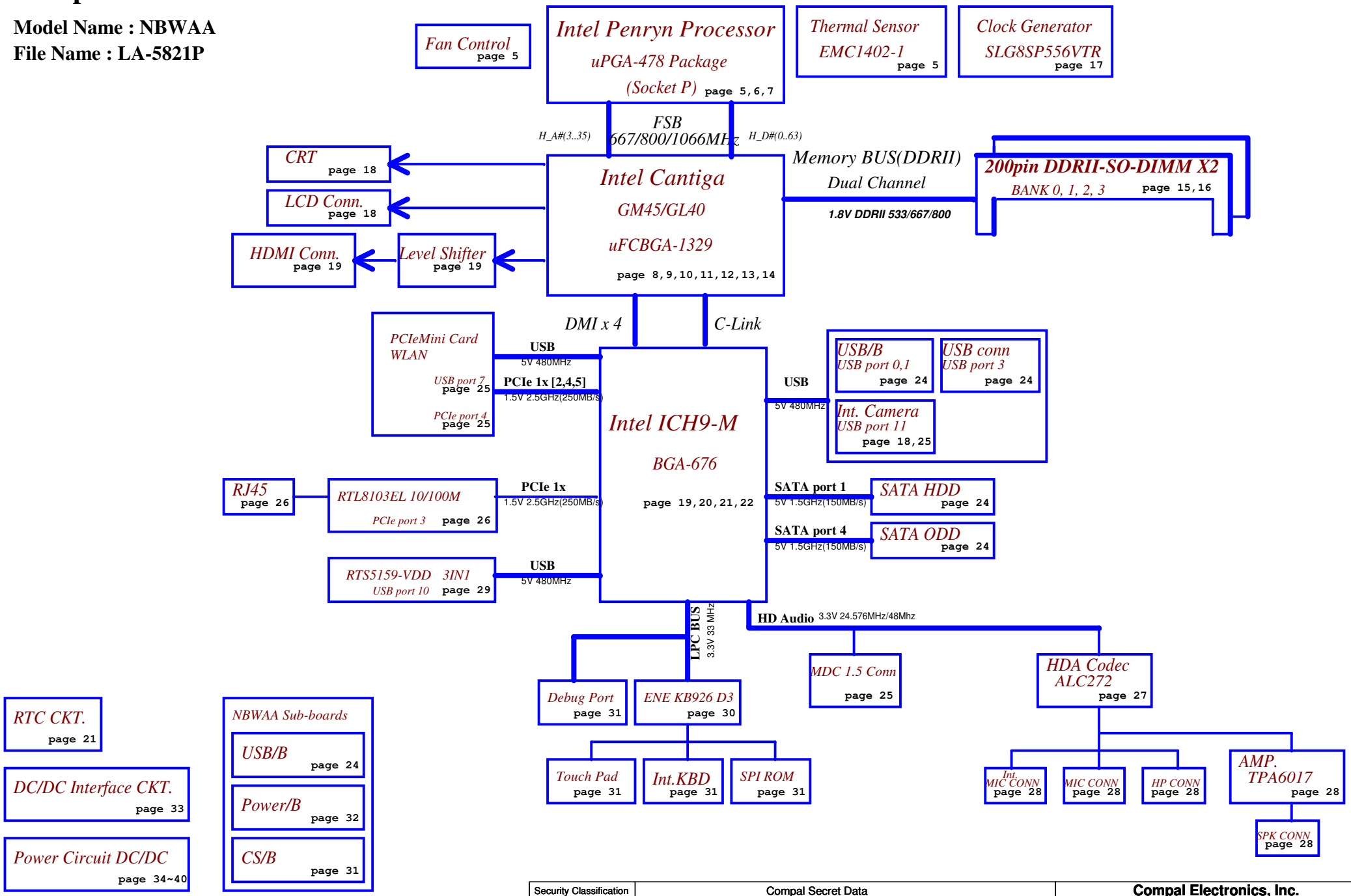

Security Classification	Compal Secret Data		
Issued Date	2009/07/28	Deciphered Date	2010/07/28

THIS SHEET OF ENGINEERING DRAWING IS THE PROPRIETARY PROPERTY OF COMPAL ELECTRONICS, INC. AND CONTAINS CONFIDENTIAL AND TRADE SECRET INFORMATION. THIS SHEET MAY NOT BE TRANSFERED FROM THE CUSTODY OF THE COMPETENT DIVISION OF R&D DEPARTMENT EXCEPT AS AUTHORIZED BY COMPAL ELECTRONICS, INC. NEITHER THIS SHEET NOR THE INFORMATION IT CONTAINS MAY BE USED BY OR DISCLOSED TO ANY THIRD PARTY WITHOUT PRIOR WRITTEN CONSENT OF COMPAL ELECTRONICS, INC.

Compal Electronics, Inc.

Title: Block Diagrams

Size | Document Number: NBWAA LA5821P M/B | Rev 1.0

Date: Thursday, August 06, 2009 | Sheet 2 of 41

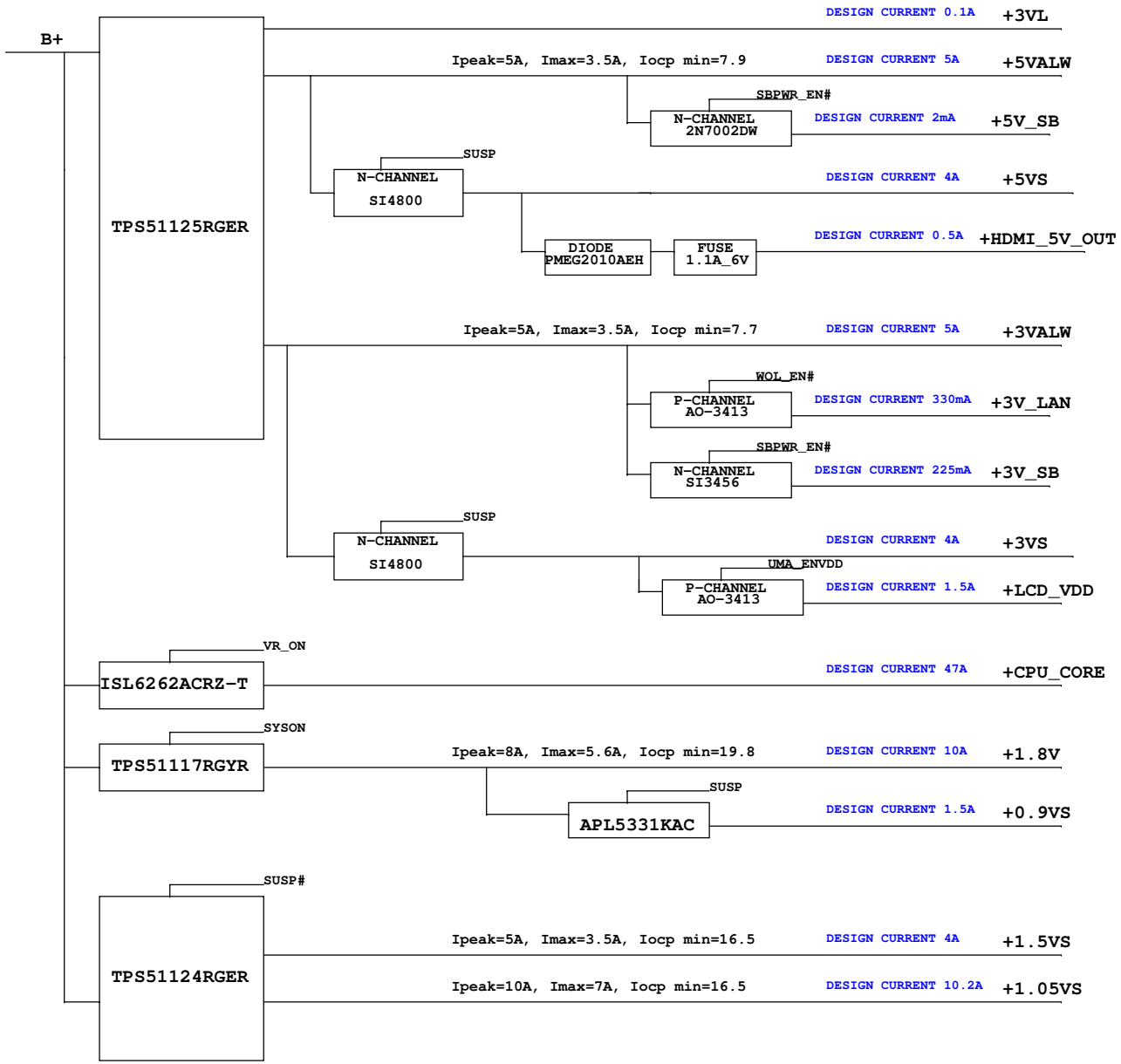

Security Classification	Compal Secret Data		
Issued Date	2009/07/28	Deciphered Date	2010/07/28

THIS SHEET OF ENGINEERING DRAWING IS THE PROPRIETARY PROPERTY OF COMPAL ELECTRONICS, INC. AND CONTAINS CONFIDENTIAL AND TRADE SECRET INFORMATION. THIS SHEET MAY NOT BE TRANSFERED FROM THE CUSTODY OF THE COMPETENT DIVISION OF R&D DEPARTMENT EXCEPT AS AUTHORIZED BY COMPAL ELECTRONICS, INC. NEITHER THIS SHEET NOR THE INFORMATION IT CONTAINS MAY BE USED BY OR DISCLOSED TO ANY THIRD PARTY WITHOUT PRIOR WRITTEN CONSENT OF COMPAL ELECTRONICS, INC.

Compal Electronics, Inc.

Title: **Power Tree**

Size | Document Number: NBWAA LA5821P M/B | Rev: 1.0

Date: Thursday, August 06, 2009 | Sheet 3 of 41

Voltage Rails

Power Plane	Description	S1	S3	S5	G3
VIN	Adapter power supply (19V)	ON	ON	ON	OFF
B+	AC or battery power rail for power circuit.	ON	ON	ON	ON
+CPU_CORE	Core voltage for CPU	ON	OFF	OFF	OFF
+0.9VS	0.9V switched power rail for DDR terminator	ON	OFF	OFF	OFF
+1.05VS	1.05V switched power rail	ON	OFF	OFF	OFF
+1.5VS	1.5V switched power rail	ON	OFF	OFF	OFF
+1.8V	1.8V power rail for DDR	ON	ON	OFF	OFF
+3VALW	3.3V always on power rail	ON	ON	ON	OFF
+3VL	3.3V always on power rail	ON	ON	ON	ON
+3V_SB	3.3V power rail for LAN	ON	ON	OFF	OFF
+3V_LAN	3.3V power rail for LAN	ON	ON	OFF	OFF
+3V_WLAN	3.3V power rail for LAN	ON	ON	OFF	OFF
+3VS	3.3V switched power rail	ON	OFF	OFF	OFF
+5VALW	5V always on power rail	ON	ON	ON	OFF
+5VL	5V always on power rail	ON	ON	ON	ON
+5V_SB	5V power rail for SB	ON	ON	OFF	OFF
+5VS	5V switched power rail	ON	OFF	OFF	OFF
+VSB	VSB always on power rail	ON	ON	ON	OFF
+RTCVCC	RTC power	ON	ON	ON	ON
+CPU_CORE	Core voltage for VGA chip	ON	ON	OFF	OFF
+VGA_PCIE_1.1VS	1.1V switched power rail for VGA PCIE	ON	ON	OFF	OFF
+1.8VS	1.8V power rail for VRAM	ON	ON	OFF	OFF

STATE \ SIGNAL	SLP_S1#	SLP_S3#	SLP_S4#	SLP_S5#		
Full ON	HIGH	HIGH	HIGH	HIGH		
S1(Power On Suspend)	LOW	HIGH	HIGH	HIGH		
S3 (Suspend to RAM)	LOW	LOW	HIGH	HIGH		
S4 (Suspend to Disk)	LOW	LOW	LOW	HIGH		
S5 (Soft OFF)	LOW	LOW	LOW	LOW		
G3	LOW	LOW	LOW	LOW		

BTO Option Table

Function	North Bridge		RJ11	CAMERA	MIC	HDMI	
description	GM	GL				Y	
explain	GM45	GL40	MODEM	CAMERA	MIC	HDMI	Non-HDMI
BTO	GM45R3@ GM45R1@	GL40R3@ GL40R1@	MDC@	CAM@	MIC@	IHDMI@	NIHDMI@

External PCI Devices

EC SM Bus1 address

Power	Device	Address
+3VL	EC KB926 D3	
+3VL	Smart Battery	0001 011X b
+3VL	FUN/B (CAP Sensor)	

EC SM Bus2 address

Power	Device	Address
+3VS	EC KB926 D3	
+3VS	CPU THM Sen SMSC SMC1402	0100 110x b

ICH9M SM Bus address

Power	Device	Address
+3V_SB	ICH9M	
+3VS	Clock Generator (SLG8SP556V)	1101 001Xb
+3VS	DDR DIMM0	1001 000Xb
+3VS	DDR DIMM1	1001 010Xb
+3VS		

Security Classification	Compal Secret Data		
Issued Date	2009/07/28	Deciphered Date	2010/07/28

THIS SHEET OF ENGINEERING DRAWING IS THE PROPRIETARY PROPERTY OF COMPAL ELECTRONICS, INC. AND CONTAINS CONFIDENTIAL AND TRADE SECRET INFORMATION. THIS SHEET MAY NOT BE TRANSFERED FROM THE CUSTODY OF THE COMPETENT DIVISION OF R&D DEPARTMENT EXCEPT AS AUTHORIZED BY COMPAL ELECTRONICS, INC. NEITHER THIS SHEET NOR THE INFORMATION IT CONTAINS MAY BE USED BY OR DISCLOSED TO ANY THIRD PARTY WITHOUT PRIOR WRITTEN CONSENT OF COMPAL ELECTRONICS, INC.

Compal Electronics, Inc.

Title: Notes List

Size | Document Number: NBWAA LA5821P M/B | Rev 1.0

Date: Thursday, August 06, 2009 | Sheet 4 of 41

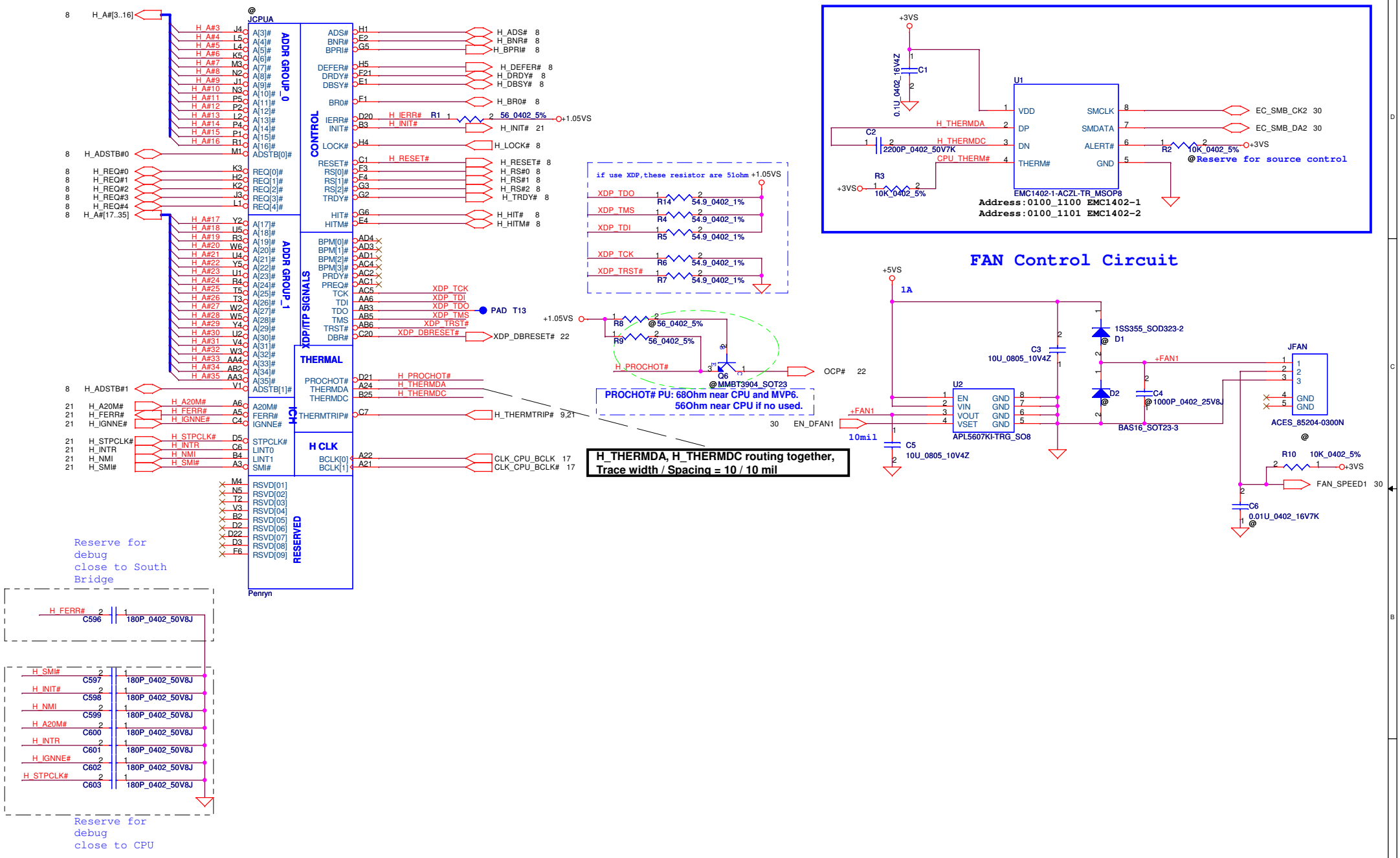

Security Classification	Compal Secret Data		
Issued Date	2009/07/28	Deciphered Date	2010/07/28

THIS SHEET OF ENGINEERING DRAWING IS THE PROPRIETARY PROPERTY OF COMPAL ELECTRONICS, INC. AND CONTAINS CONFIDENTIAL AND TRADE SECRET INFORMATION. THIS SHEET MAY NOT BE TRANSFERED FROM THE CUSTODY OF THE COMPETENT DIVISION OF R&D DEPARTMENT EXCEPT AS AUTHORIZED BY COMPAL ELECTRONICS, INC. NEITHER THIS SHEET NOR THE INFORMATION IT CONTAINS MAY BE USED BY OR DISCLOSED TO ANY THIRD PARTY WITHOUT PRIOR WRITTEN CONSENT OF COMPAL ELECTRONICS, INC.

Compal Electronics, Inc.

Title: Penryn(1/3)-AGTL+/THM/FAN

Size | Document Number: NBWAA LA5821P M/B | Rev 1.0

Date: Monday, August 10, 2009 | Sheet 5 of 41

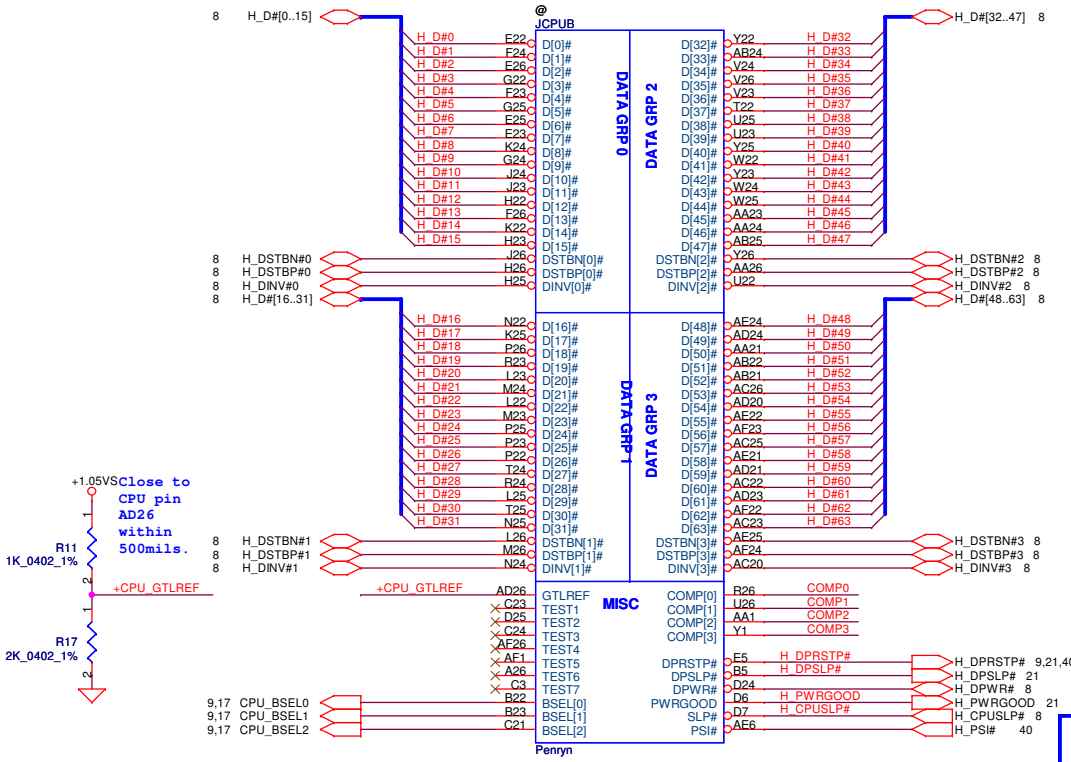

Resistor placed within 0.5" of CPU pin.Trace should be at least 25 mils away from any other toggling signal. COMP[0,2] trace width is 18 mils. COMP[1,3] trace width is 4 mils.

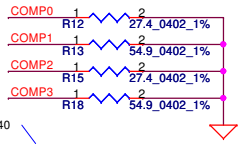

layout note: Please use "Daisy Chain" to layout and the signal (H_DPRSTP#) is routed from ICH9 to power IC, then to NB and CPU

layout note: Route TEST3 & TEST5 traces on ground referenced layer to the TPs

CPU_BSEL	CPU_BSEL2	CPU_BSEL1	CPU_BSEL0
166	0	1	1
200	0	1	0
266	0	0	0

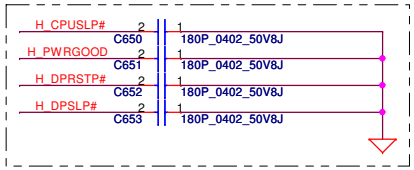

Reserve for debug close to CPU

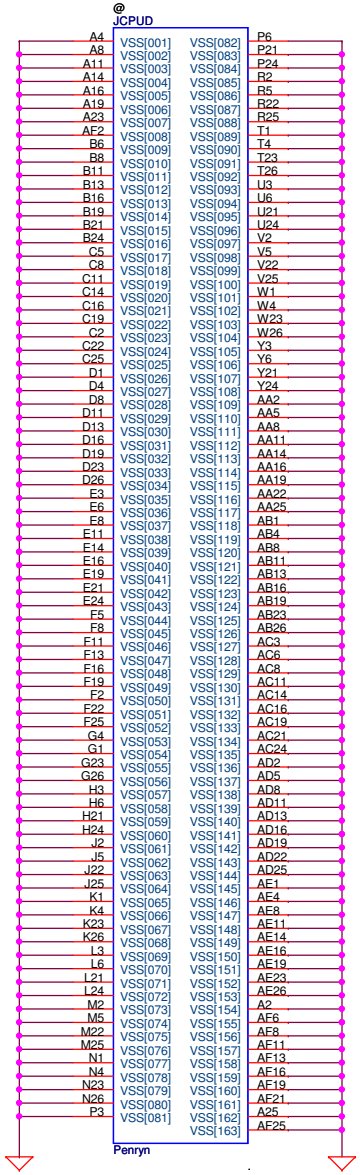

Security Classification	Compal Secret Data		
Issued Date	2009/07/28	Deciphered Date	2010/07/28

THIS SHEET OF ENGINEERING DRAWING IS THE PROPRIETARY PROPERTY OF COMPAL ELECTRONICS, INC. AND CONTAINS CONFIDENTIAL AND TRADE SECRET INFORMATION. THIS SHEET MAY NOT BE TRANSFERED FROM THE CUSTODY OF THE COMPETENT DIVISION OF R&D DEPARTMENT EXCEPT AS AUTHORIZED BY COMPAL ELECTRONICS, INC. NEITHER THIS SHEET NOR THE INFORMATION IT CONTAINS MAY BE USED BY OR DISCLOSED TO ANY THIRD PARTY WITHOUT PRIOR WRITTEN CONSENT OF COMPAL ELECTRONICS, INC.

Compal Electronics, Inc.

Title: Penryn(2/3)-AGTL+/GND

Size | Document Number: NBWAA LA5821P M/B | Rev 1.0

Date: Thursday, August 06, 2009 | Sheet 6 of 41

Near CPU CORE regulator

ESR <= 1.5m ohm
Capacitor > 1980uF

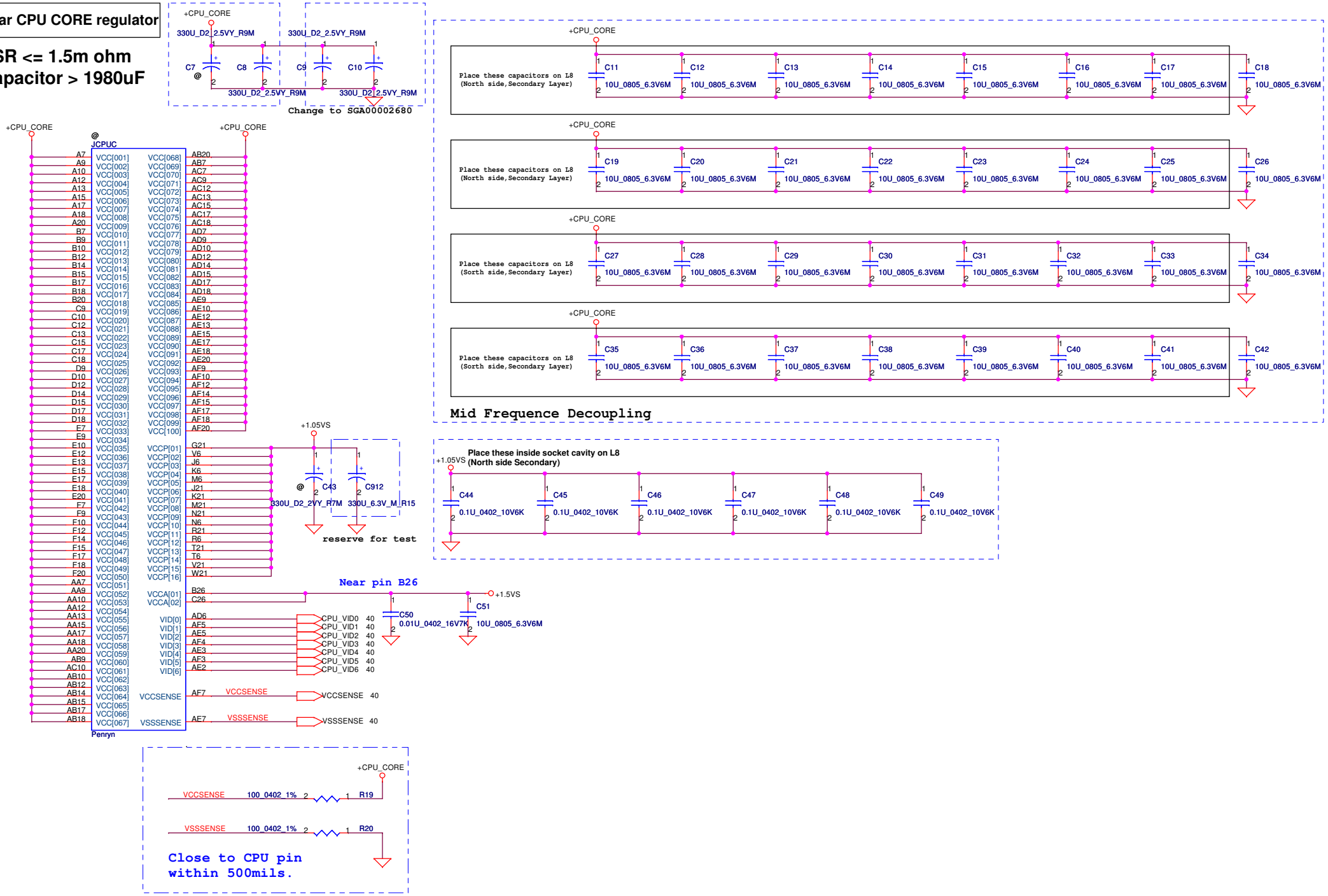

Length match within 25 mils. The trace width/space/other is 14/7/25.

Security Classification	Compal Secret Data		
Issued Date	2009/07/28	Deciphered Date	2010/07/28

THIS SHEET OF ENGINEERING DRAWING IS THE PROPRIETARY PROPERTY OF COMPAL ELECTRONICS, INC. AND CONTAINS CONFIDENTIAL AND TRADE SECRET INFORMATION. THIS SHEET MAY NOT BE TRANSFERED FROM THE CUSTODY OF THE COMPETENT DIVISION OF R&D DEPARTMENT EXCEPT AS AUTHORIZED BY COMPAL ELECTRONICS, INC. NEITHER THIS SHEET NOR THE INFORMATION IT CONTAINS MAY BE USED BY OR DISCLOSED TO ANY THIRD PARTY WITHOUT PRIOR WRITTEN CONSENT OF COMPAL ELECTRONICS, INC.

Compal Electronics, Inc.

Title: Penryn(3/3)-PWR/Bypass

Size | Document Number: NBWAA LA5821P M/B | Rev 1.0

Date: Thursday, August 06, 2009 | Sheet 7 of 41

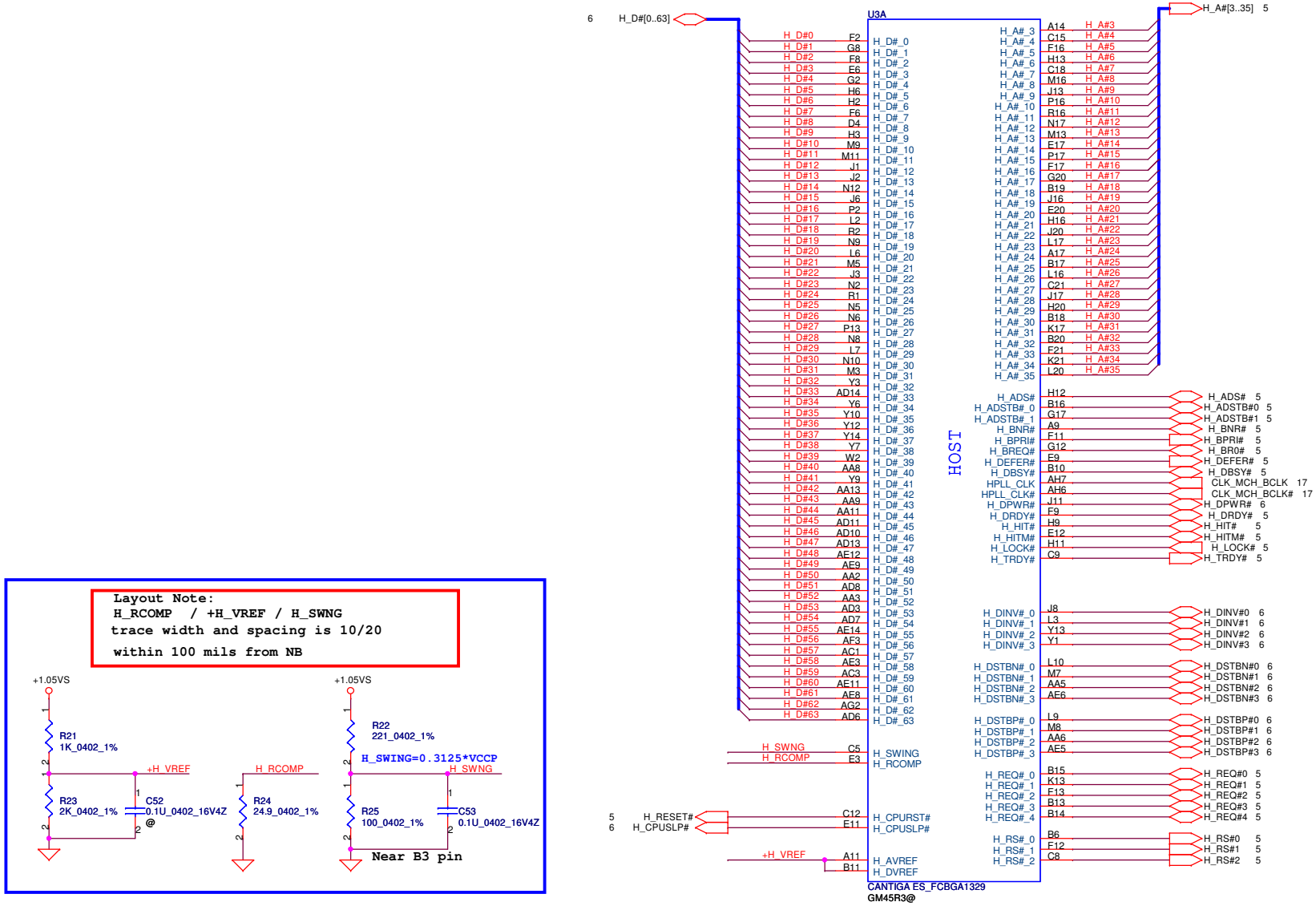

Layout Note:
H_RCOMP / +H_VREF / H_SWNG
trace width and spacing is 10/20
within 100 mils from NB

Security Classification	Compal Secret Data		
Issued Date	2009/07/28	Deciphered Date	2010/07/28

THIS SHEET OF ENGINEERING DRAWING IS THE PROPRIETARY PROPERTY OF COMPAL ELECTRONICS, INC. AND CONTAINS CONFIDENTIAL AND TRADE SECRET INFORMATION. THIS SHEET MAY NOT BE TRANSFERED FROM THE CUSTODY OF THE COMPETENT DIVISION OF R&D DEPARTMENT EXCEPT AS AUTHORIZED BY COMPAL ELECTRONICS, INC. NEITHER THIS SHEET NOR THE INFORMATION IT CONTAINS MAY BE USED BY OR DISCLOSED TO ANY THIRD PARTY WITHOUT PRIOR WRITTEN CONSENT OF COMPAL ELECTRONICS, INC.

Compal Electronics, Inc.

Title: Cantiga GMCH(1/7)-GTL

Size | Document Number: NBWAA LA5821P M/B | Rev: 1.0

Date: Monday, August 10, 2009 | Sheet 8 of 41

Strap Pin Table

CFG[2:0]		011 = FSB667 010 = FSB800 000 = FSB1067
CFG5	Internal pull-up	0 = DMI x 2 1 = DMI x 4 *(Default)
CFG6	Internal pull-up	0 = iTPM Host Interface is enabled can support disble by SW. 1 = iTPM Host Interface is Disabled * (Default)
CFG7	Internal pull-up	0 = Intel Management Engine Crypto Transport Layer Security (TLS) cipher suite with no confidentiality 1 = Intel Management Engine Crypto TLS cipher suite with confidentiality *(Default)
CFG9	Internal pull-up	0 = Lane Reversal Enable 1 = Normal Operation *(Default)
CFG10	Internal pull-up	0 = PCIe Loopback Enable 1 = Disable*(Default)
CFG[13:12]	Internal pull-up	01 = All Z Mode Enabled 00 = Reserved 10 = XOR Mode Enabled 11 = Normal Operation*(Default)
CFG16	Internal pull-up	0 = Dynamic ODT Disabled 1 = Dynamic ODT Enabled *(Default)
CFG19	Internal pull-down	0 = Normal Operation 1 = DMI Lane Reversal Enable *(Default)
CFG20 (PCIE/SDVO select)	Internal pull-down	0 = Only PCIE or [SDVO/DP/HDMI] is operational. * (Default) 1 = PCIE/[SDVO/DP/HDMI] are operating simu.

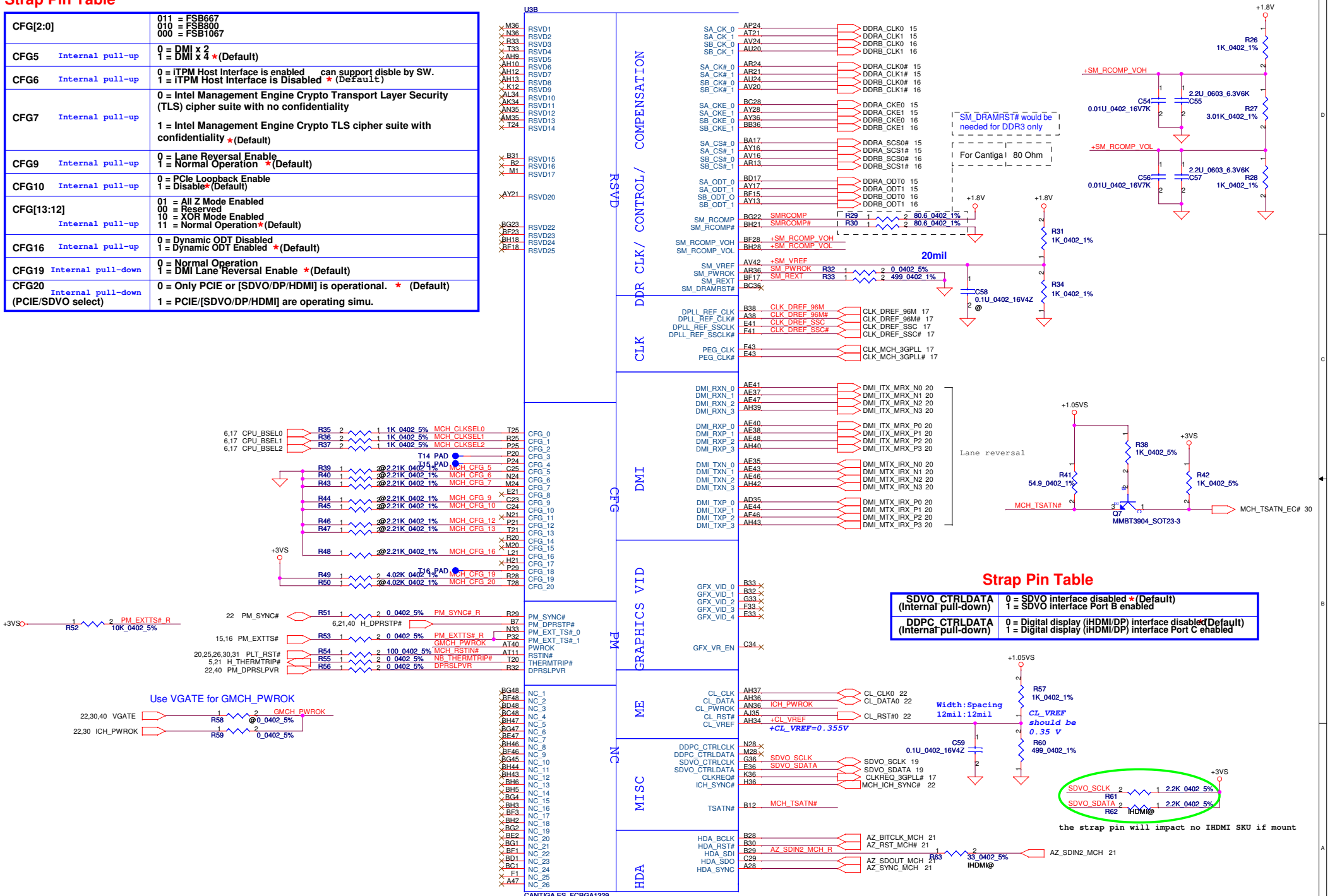

Strap Pin Table

SDVO_CTRLDATA (Internal pull-down)	0 = SDVO interface disabled *(Default) 1 = SDVO interface Port B enabled
DDPC_CTRLDATA (Internal pull-down)	0 = Digital display (iHDMI/DP) interface disabled*(Default) 1 = Digital display (iHDMI/DP) interface Port C enabled

the strap pin will impact no IHDMI SKU if mount

Security Classification	Compal Secret Data		
Issued Date	2009/07/28	Deciphered Date	2010/07/28

THIS SHEET OF ENGINEERING DRAWING IS THE PROPRIETARY PROPERTY OF COMPAL ELECTRONICS, INC. AND CONTAINS CONFIDENTIAL AND TRADE SECRET INFORMATION. THIS SHEET MAY NOT BE TRANSFERED FROM THE CUSTODY OF THE COMPETENT DIVISION OF R&D DEPARTMENT EXCEPT AS AUTHORIZED BY COMPAL ELECTRONICS, INC. NEITHER THIS SHEET NOR THE INFORMATION IT CONTAINS MAY BE USED BY OR DISCLOSED TO ANY THIRD PARTY WITHOUT PRIOR WRITTEN CONSENT OF COMPAL ELECTRONICS, INC.

Compal Electronics, Inc.

Title: Cantiga GMCH(2/7)-GTL

Size | Document Number: NBWAA LA5821P M/B | Rev 1.0

Date: Monday, August 10, 2009 | Sheet 9 of 41

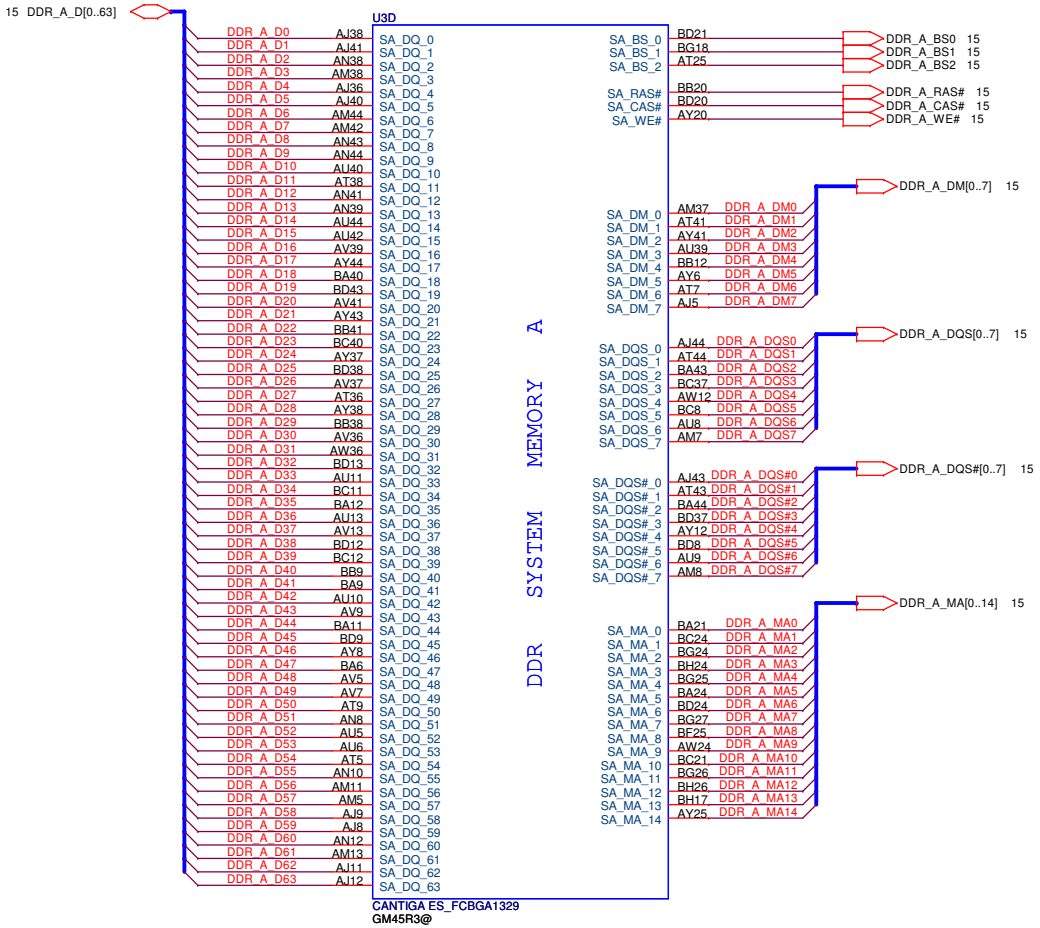

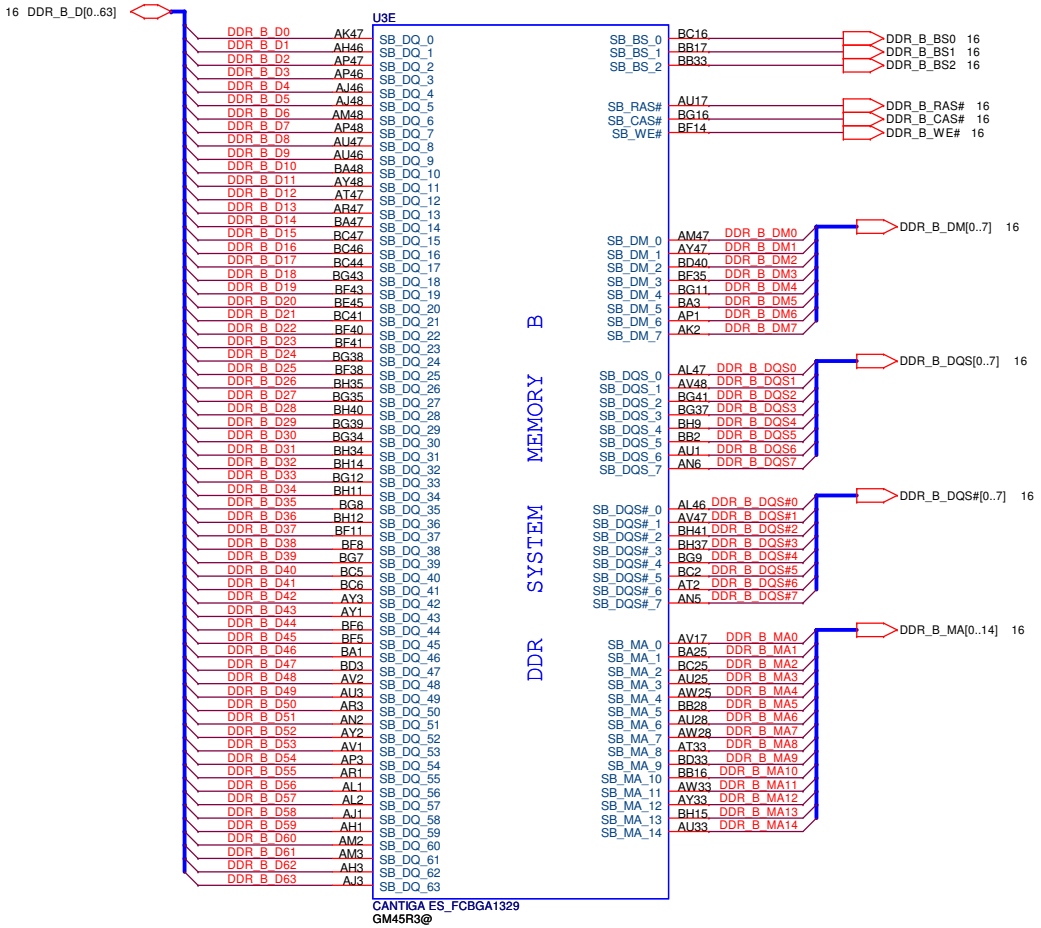

Security Classification	Compal Secret Data		
Issued Date	2009/07/28	Deciphered Date	2010/07/28

THIS SHEET OF ENGINEERING DRAWING IS THE PROPRIETARY PROPERTY OF COMPAL ELECTRONICS, INC. AND CONTAINS CONFIDENTIAL AND TRADE SECRET INFORMATION. THIS SHEET MAY NOT BE TRANSFERED FROM THE CUSTODY OF THE COMPETENT DIVISION OF R&D DEPARTMENT EXCEPT AS AUTHORIZED BY COMPAL ELECTRONICS, INC. NEITHER THIS SHEET NOR THE INFORMATION IT CONTAINS MAY BE USED BY OR DISCLOSED TO ANY THIRD PARTY WITHOUT PRIOR WRITTEN CONSENT OF COMPAL ELECTRONICS, INC.

Compal Electronics, Inc.

Title: Cantiga GMCH(3/7)-GTL

Size | Document Number: NBWAA LA5821P M/B | Rev: 1.0

Date: Monday, August 10, 2009 | Sheet 10 of 41

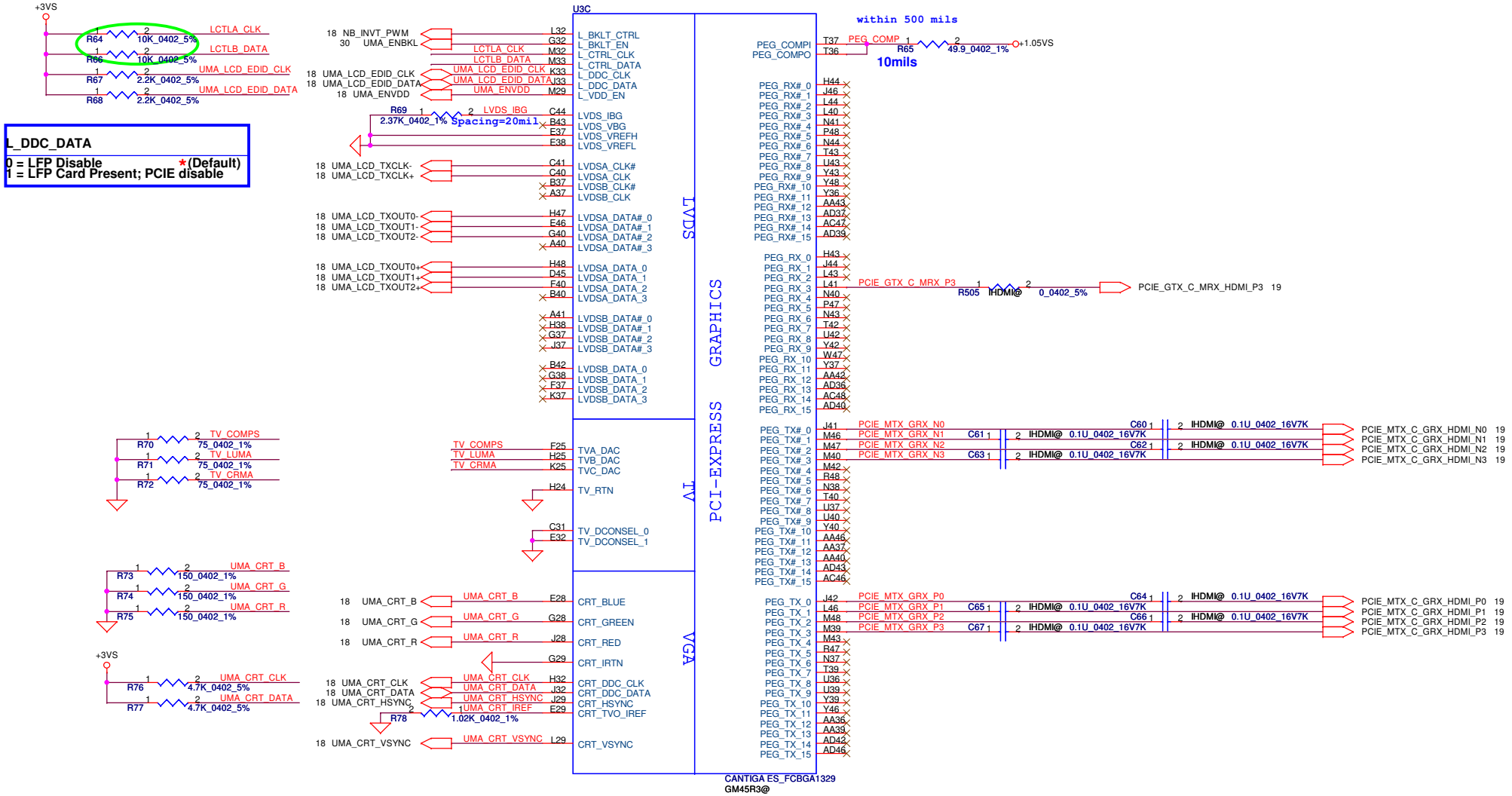

Security Classification	Compal Secret Data		
Issued Date	2009/07/28	Deciphered Date	2010/07/28

THIS SHEET OF ENGINEERING DRAWING IS THE PROPRIETARY PROPERTY OF COMPAL ELECTRONICS, INC. AND CONTAINS CONFIDENTIAL AND TRADE SECRET INFORMATION. THIS SHEET MAY NOT BE TRANSFERED FROM THE CUSTODY OF THE COMPETENT DIVISION OF R&D DEPARTMENT EXCEPT AS AUTHORIZED BY COMPAL ELECTRONICS, INC. NEITHER THIS SHEET NOR THE INFORMATION IT CONTAINS MAY BE USED BY OR DISCLOSED TO ANY THIRD PARTY WITHOUT PRIOR WRITTEN CONSENT OF COMPAL ELECTRONICS, INC.

Compal Electronics, Inc.

Title: Cantiga GMCH(4/7)-GTL

Size | Document Number: NBWAA LA5821P M/B | Rev: 1.0

Date: Monday, August 10, 2009 | Sheet 11 of 41

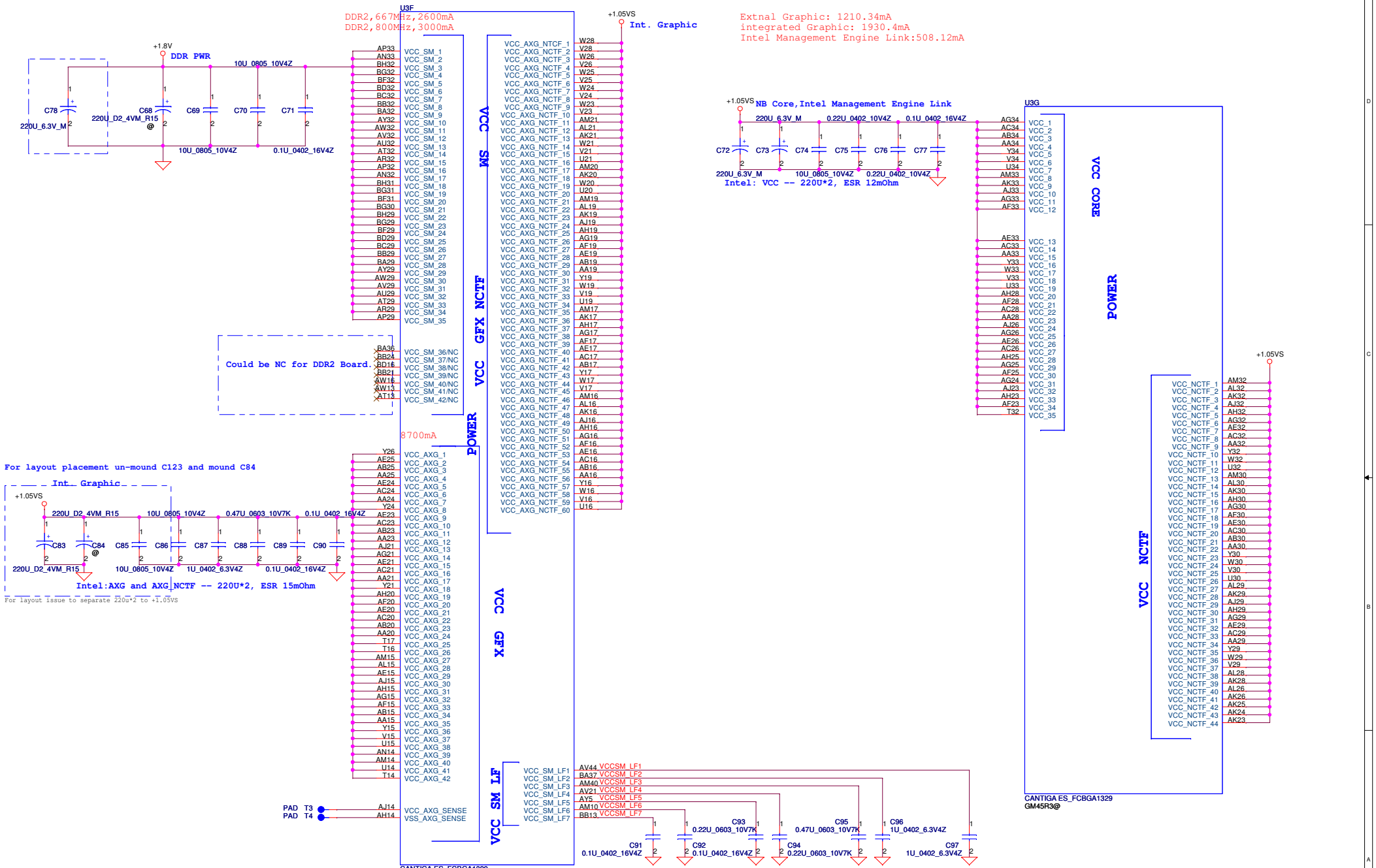

Security Classification	Compal Secret Data		
Issued Date	2009/07/28	Deciphered Date	2010/07/28

THIS SHEET OF ENGINEERING DRAWING IS THE PROPRIETARY PROPERTY OF COMPAL ELECTRONICS, INC. AND CONTAINS CONFIDENTIAL AND TRADE SECRET INFORMATION. THIS SHEET MAY NOT BE TRANSFERED FROM THE CUSTODY OF THE COMPETENT DIVISION OF R&D DEPARTMENT EXCEPT AS AUTHORIZED BY COMPAL ELECTRONICS, INC. NEITHER THIS SHEET NOR THE INFORMATION IT CONTAINS MAY BE USED BY OR DISCLOSED TO ANY THIRD PARTY WITHOUT PRIOR WRITTEN CONSENT OF COMPAL ELECTRONICS, INC.

Compal Electronics, Inc.

Title: Cantiga GMCH(5/7)-GTL

Size | Document Number: NBWAA LA5821P M/B | Rev: 1.0

Date: Monday, August 10, 2009 | Sheet 12 of 41

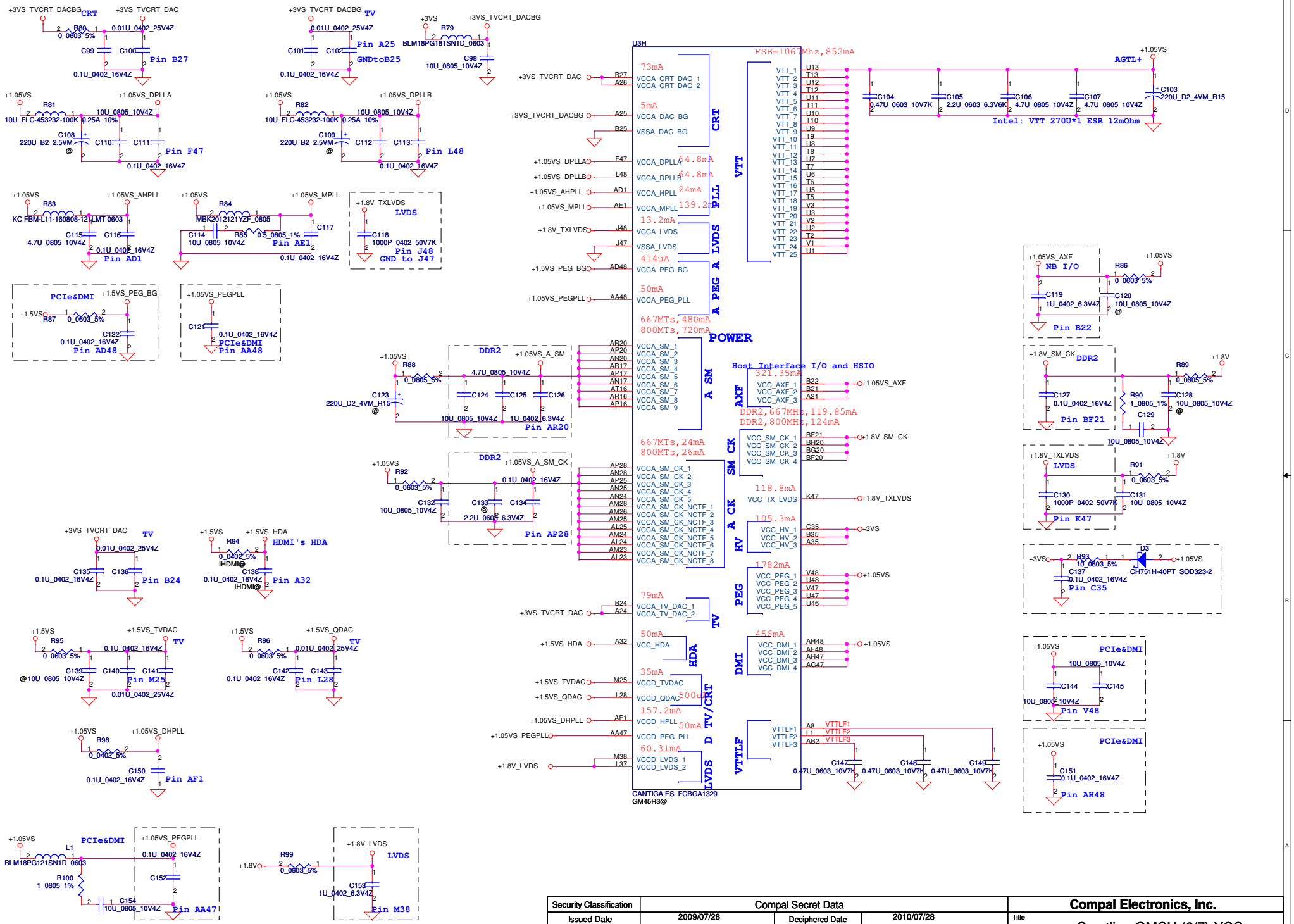

Security Classification	Compal Secret Data		
Issued Date	2009/07/28	Deciphered Date	2010/07/28

THIS SHEET OF ENGINEERING DRAWING IS THE PROPRIETARY PROPERTY OF COMPAL ELECTRONICS, INC. AND CONTAINS CONFIDENTIAL AND TRADE SECRET INFORMATION. THIS SHEET MAY NOT BE TRANSFERED FROM THE CUSTODY OF THE COMPETENT DIVISION OF R&D DEPARTMENT EXCEPT AS AUTHORIZED BY COMPAL ELECTRONICS, INC. NEITHER THIS SHEET NOR THE INFORMATION IT CONTAINS MAY BE USED BY OR DISCLOSED TO ANY THIRD PARTY WITHOUT PRIOR WRITTEN CONSENT OF COMPAL ELECTRONICS, INC.

Compal Electronics, Inc.

Title: Crestline GMCH (6/7)-VCC

Size | Document Number: NBWAA LA5821P M/B | Rev 1.0

Date: Monday, August 10, 2009 | Sheet 13 of 41

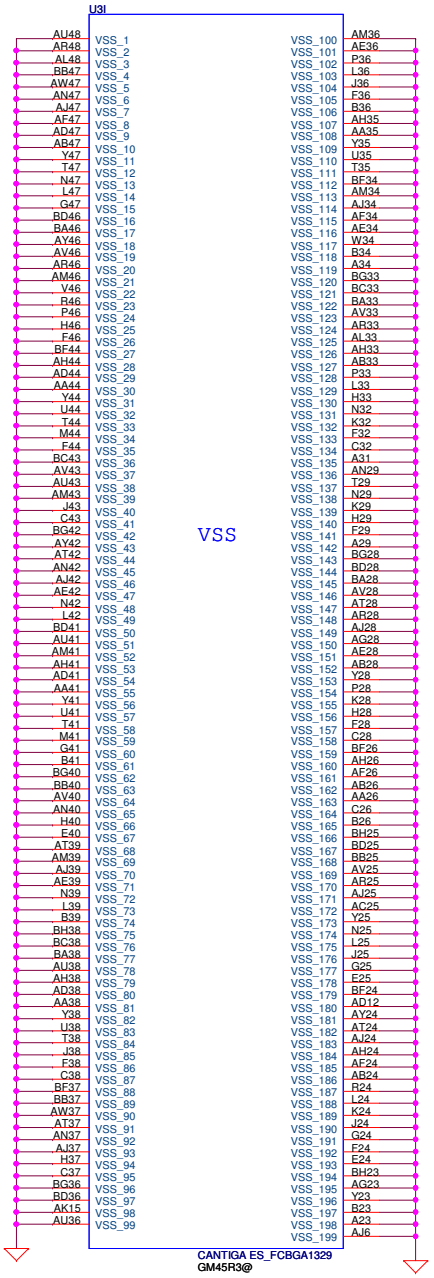

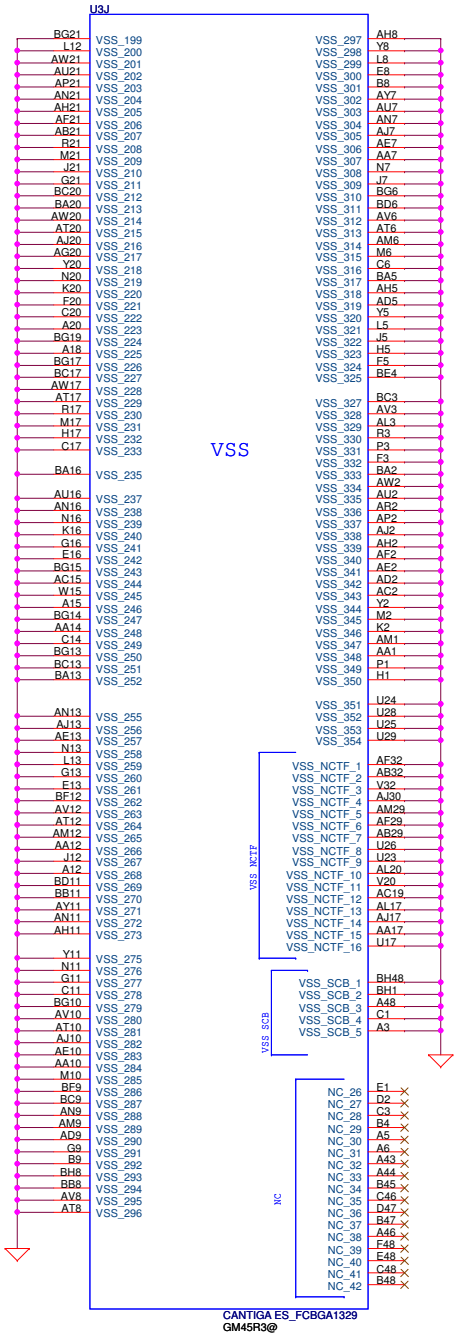

Security Classification	Compal Secret Data			Compal Electronics, Inc.
Issued Date	2009/07/28	Deciphered Date	2010/07/28	Title: Cantiga GMCH(1/7)-GTL
				Size / Document Number: NBWAA LA5821P M/B — Rev 1.0
				Date: Monday, August 10, 2009 — Sheet 14 of 41

THIS SHEET OF ENGINEERING DRAWING IS THE PROPRIETARY PROPERTY OF COMPAL ELECTRONICS, INC. AND CONTAINS CONFIDENTIAL AND TRADE SECRET INFORMATION. THIS SHEET MAY NOT BE TRANSFERED FROM THE CUSTODY OF THE COMPETENT DIVISION OF R&D DEPARTMENT EXCEPT AS AUTHORIZED BY COMPAL ELECTRONICS, INC. NEITHER THIS SHEET NOR THE INFORMATION IT CONTAINS MAY BE USED BY OR DISCLOSED TO ANY THIRD PARTY WITHOUT PRIOR WRITTEN CONSENT OF COMPAL ELECTRONICS, INC.

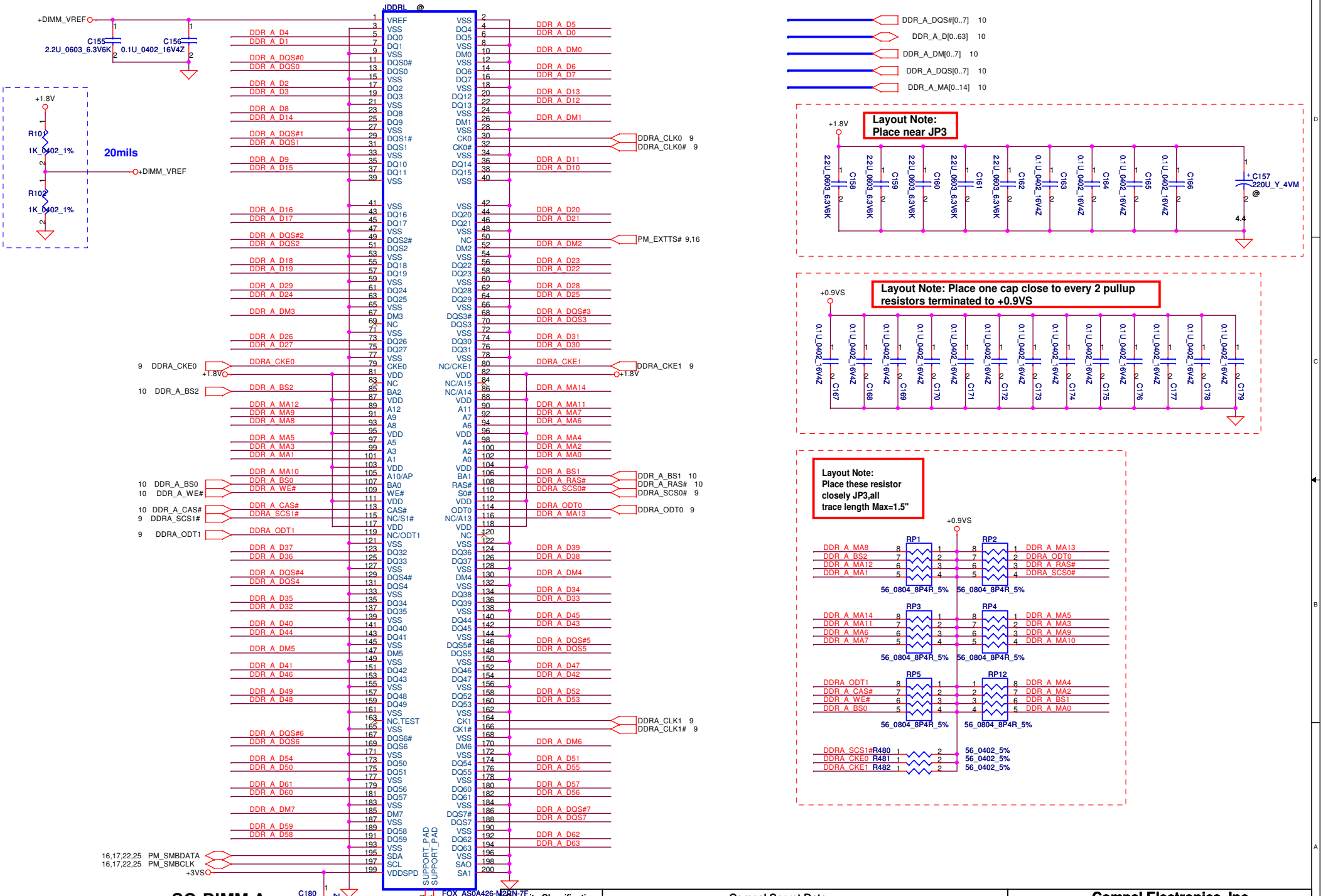

SO-DIMM A REVERSE
Top side

Security Classification	Compal Secret Data		
Issued Date	2009/07/28	Deciphered Date	2010/07/28

THIS SHEET OF ENGINEERING DRAWING IS THE PROPRIETARY PROPERTY OF COMPAL ELECTRONICS, INC. AND CONTAINS CONFIDENTIAL AND TRADE SECRET INFORMATION. THIS SHEET MAY NOT BE TRANSFERED FROM THE CUSTODY OF THE COMPETENT DIVISION OF R&D DEPARTMENT EXCEPT AS AUTHORIZED BY COMPAL ELECTRONICS, INC. NEITHER THIS SHEET NOR THE INFORMATION IT CONTAINS MAY BE USED BY OR DISCLOSED TO ANY THIRD PARTY WITHOUT PRIOR WRITTEN CONSENT OF COMPAL ELECTRONICS, INC.

Compal Electronics, Inc.

Title: DDRII-SODIMM0

Size | Document Number: NBWAA LA5821P M/B | Rev 1.0

Date: Monday, August 10, 2009 | Sheet 15 of 41

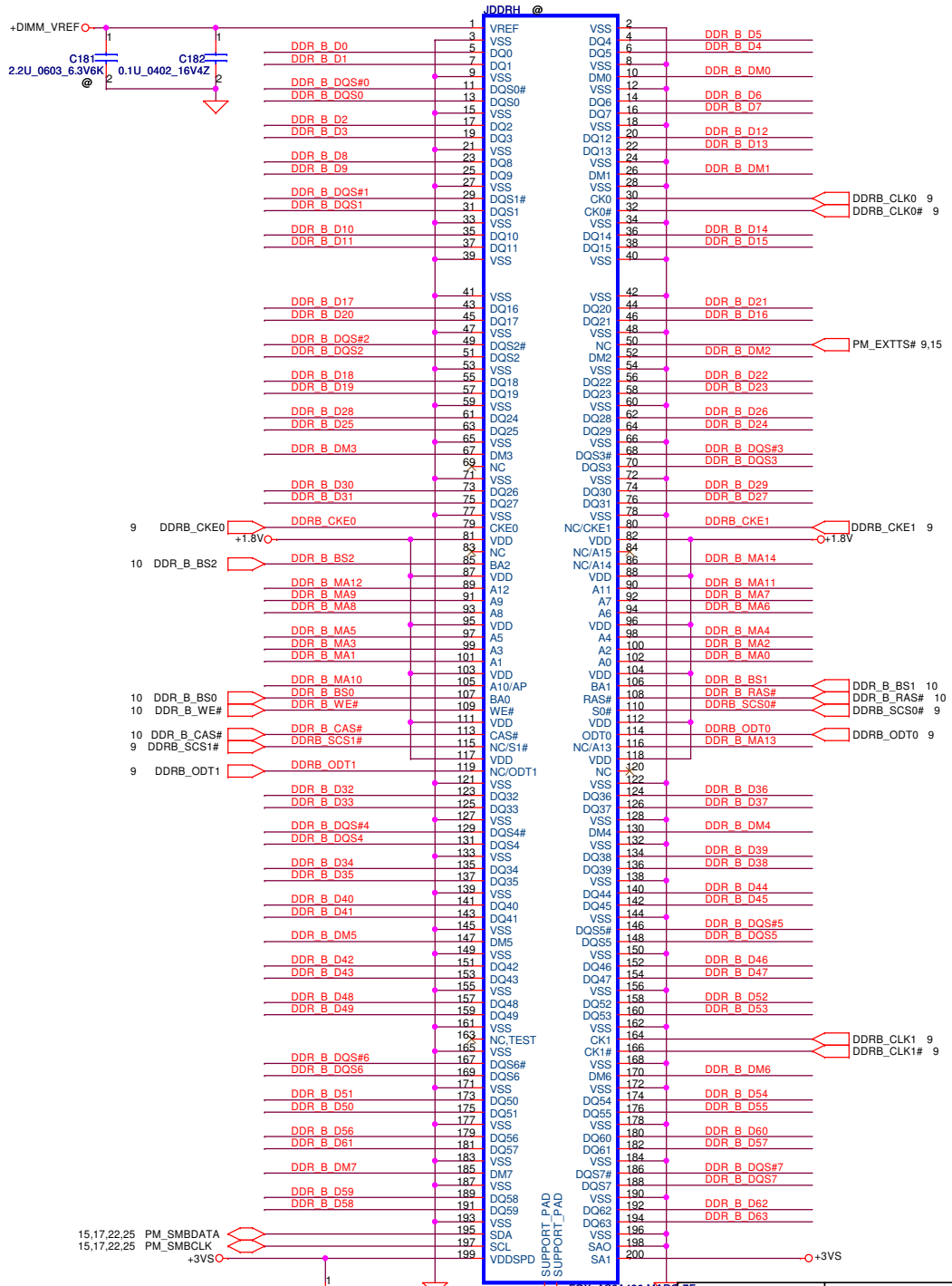

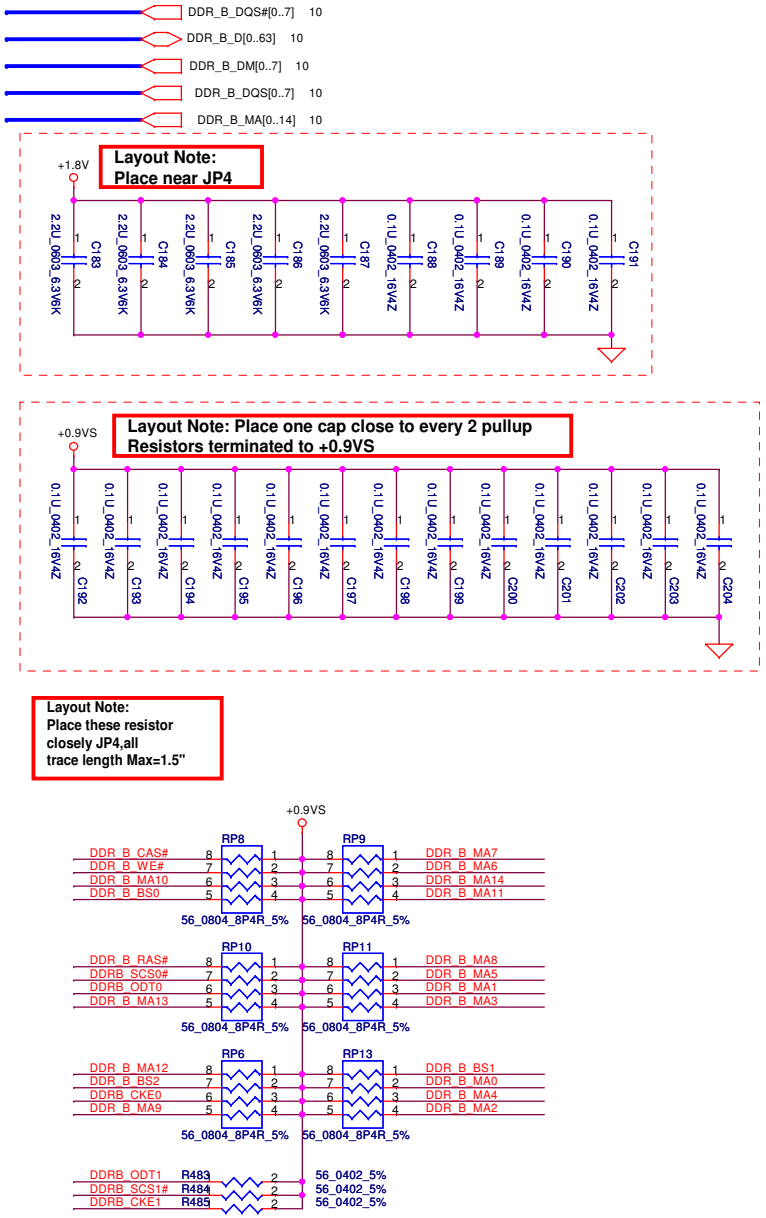

SO-DIMM B STANDARD
Bottom side

Security Classification	Compal Secret Data		
Issued Date	2009/07/28	Deciphered Date	2010/07/28

THIS SHEET OF ENGINEERING DRAWING IS THE PROPRIETARY PROPERTY OF COMPAL ELECTRONICS, INC. AND CONTAINS CONFIDENTIAL AND TRADE SECRET INFORMATION. THIS SHEET MAY NOT BE TRANSFERED FROM THE CUSTODY OF THE COMPETENT DIVISION OF R&D DEPARTMENT EXCEPT AS AUTHORIZED BY COMPAL ELECTRONICS, INC. NEITHER THIS SHEET NOR THE INFORMATION IT CONTAINS MAY BE USED BY OR DISCLOSED TO ANY THIRD PARTY WITHOUT PRIOR WRITTEN CONSENT OF COMPAL ELECTRONICS, INC.

Compal Electronics, Inc.

Title: DDRII-SODIMM1

Size | Document Number: NBWAA LA5821P M/B | Rev 1.0

Date: Monday, August 10, 2009 | Sheet 16 of 41

FSC CLKSEL2	FSB CLKSEL1	FSA CLKSEL0	CPU MHz	SRC MHz	PCI MHz	REF MHz	DOT_96 MHz	USB MHz
0	0	0	266	100	33.3	14.318	96.0	48.0
0	0	1	133	100	33.3	14.318	96.0	48.0
0	1	0	200	100	33.3	14.318	96.0	48.0
0	1	1	166	100	33.3	14.318	96.0	48.0
1	0	0	333	100	33.3	14.318	96.0	48.0
1	0	1	100	100	33.3	14.318	96.0	48.0
1	1	0	400	100	33.3	14.318	96.0	48.0
1	1	1	Reserved					

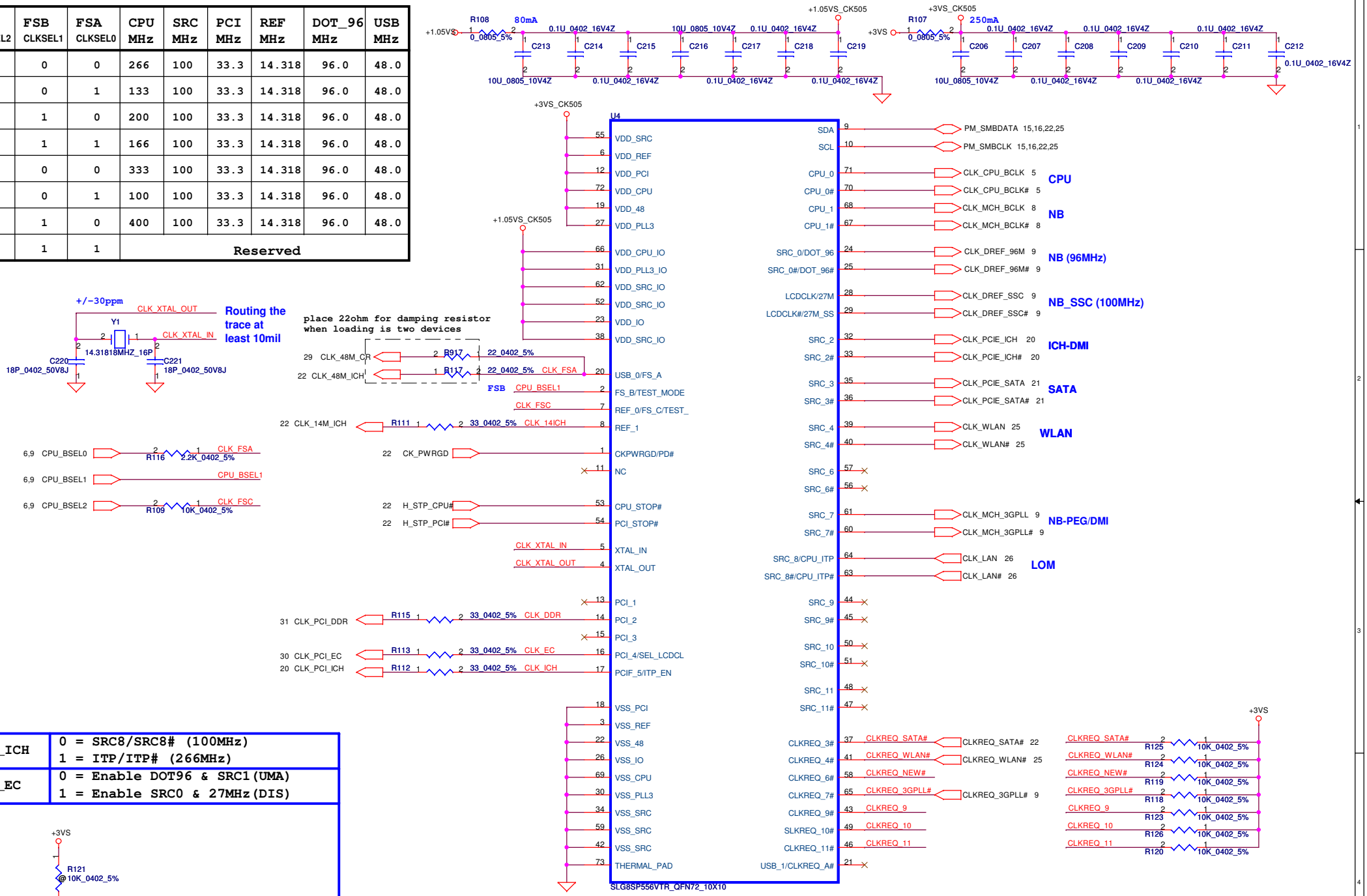

CLK_ICH	0 = SRC8/SRC8# (100MHz) 1 = ITP/ITP# (266MHz)
CLK_EC	0 = Enable DOT96 & SRC1(UMA) 1 = Enable SRC0 & 27MHz(DIS)

Security Classification	Compal Secret Data		
Issued Date	2009/07/28	Deciphered Date	2010/07/28

THIS SHEET OF ENGINEERING DRAWING IS THE PROPRIETARY PROPERTY OF COMPAL ELECTRONICS, INC. AND CONTAINS CONFIDENTIAL AND TRADE SECRET INFORMATION. THIS SHEET MAY NOT BE TRANSFERED FROM THE CUSTODY OF THE COMPETENT DIVISION OF R&D DEPARTMENT EXCEPT AS AUTHORIZED BY COMPAL ELECTRONICS, INC. NEITHER THIS SHEET NOR THE INFORMATION IT CONTAINS MAY BE USED BY OR DISCLOSED TO ANY THIRD PARTY WITHOUT PRIOR WRITTEN CONSENT OF COMPAL ELECTRONICS, INC.

Compal Electronics, Inc.

Title: Clock Generator

Size | Document Number: NBWAA LA5821P M/B | Rev 1.0

Date: Monday, August 10, 2009 | Sheet 17 of 41

LCD/PANEL BD. Conn.

LVDS & CAMERA

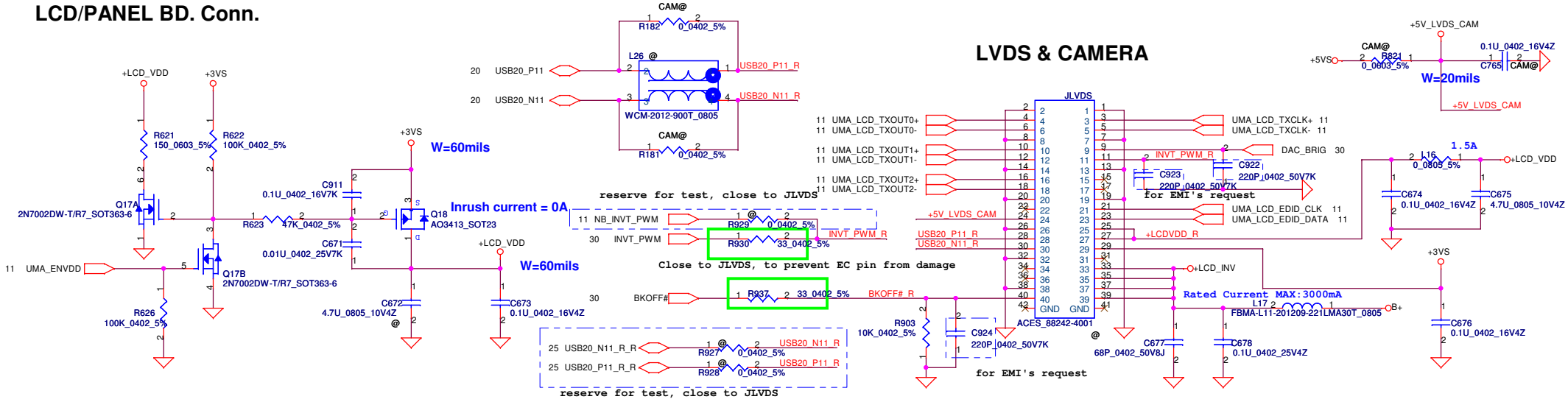

CRT CONNECTOR

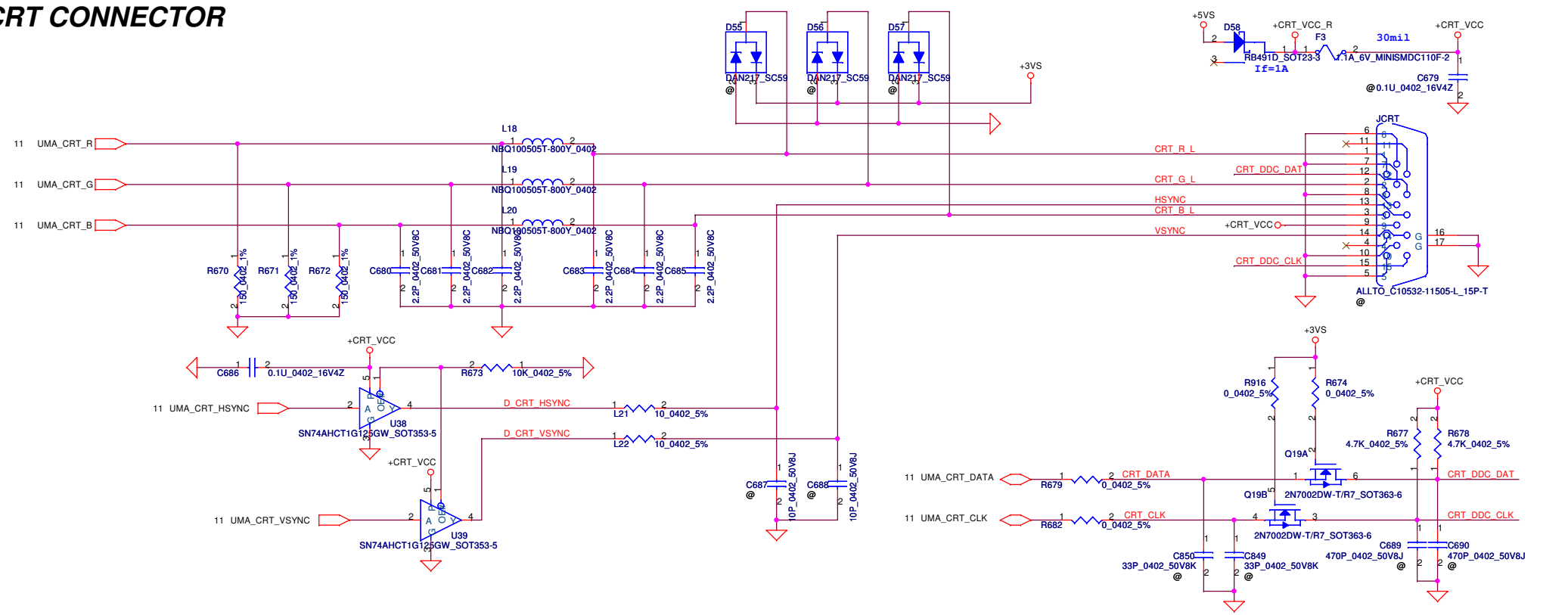

Security Classification	Compal Secret Data		
Issued Date	2009/07/28	Deciphered Date	2010/07/28

THIS SHEET OF ENGINEERING DRAWING IS THE PROPRIETARY PROPERTY OF COMPAL ELECTRONICS, INC. AND CONTAINS CONFIDENTIAL AND TRADE SECRET INFORMATION. THIS SHEET MAY NOT BE TRANSFERED FROM THE CUSTODY OF THE COMPETENT DIVISION OF R&D DEPARTMENT EXCEPT AS AUTHORIZED BY COMPAL ELECTRONICS, INC. NEITHER THIS SHEET NOR THE INFORMATION IT CONTAINS MAY BE USED BY OR DISCLOSED TO ANY THIRD PARTY WITHOUT PRIOR WRITTEN CONSENT OF COMPAL ELECTRONICS, INC.

Compal Electronics, Inc.

Title: **LVDS/CAM & CRT**

Size | Document Number: **NBWAA LA5821P M/B** | Rev: 1.0

Date: Thursday, August 06, 2009 | Sheet 18 of 41

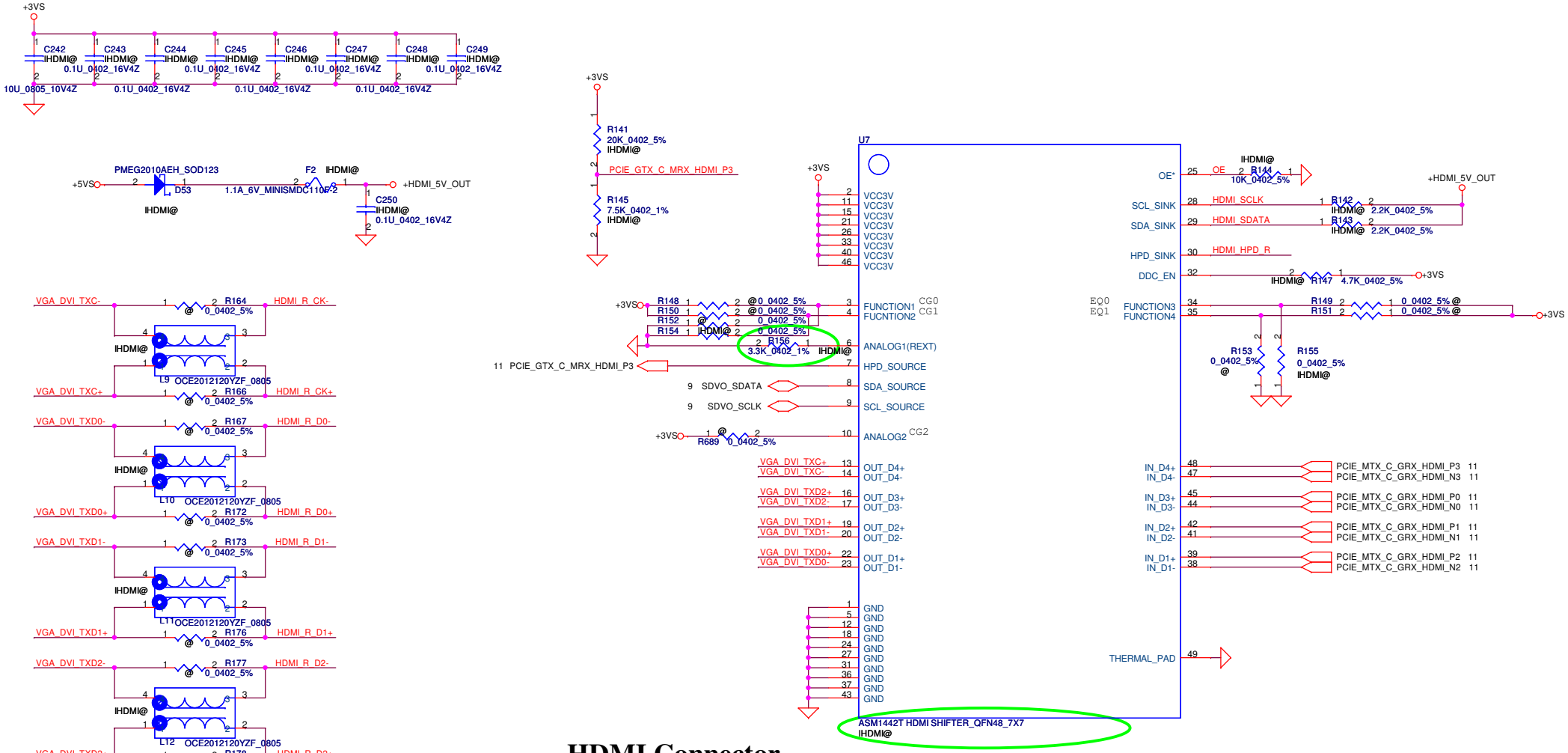

Security Classification	Compal Secret Data		
Issued Date	2009/07/28	Deciphered Date	2010/07/28

THIS SHEET OF ENGINEERING DRAWING IS THE PROPRIETARY PROPERTY OF COMPAL ELECTRONICS, INC. AND CONTAINS CONFIDENTIAL AND TRADE SECRET INFORMATION. THIS SHEET MAY NOT BE TRANSFERED FROM THE CUSTODY OF THE COMPETENT DIVISION OF R&D DEPARTMENT EXCEPT AS AUTHORIZED BY COMPAL ELECTRONICS, INC. NEITHER THIS SHEET NOR THE INFORMATION IT CONTAINS MAY BE USED BY OR DISCLOSED TO ANY THIRD PARTY WITHOUT PRIOR WRITTEN CONSENT OF COMPAL ELECTRONICS, INC.

Compal Electronics, Inc.

Title: HDMI Connector

Size | Document Number: NBWAA LA5821P M/B | Rev 1.0

Date: Monday, August 10, 2009 | Sheet 19 of 41

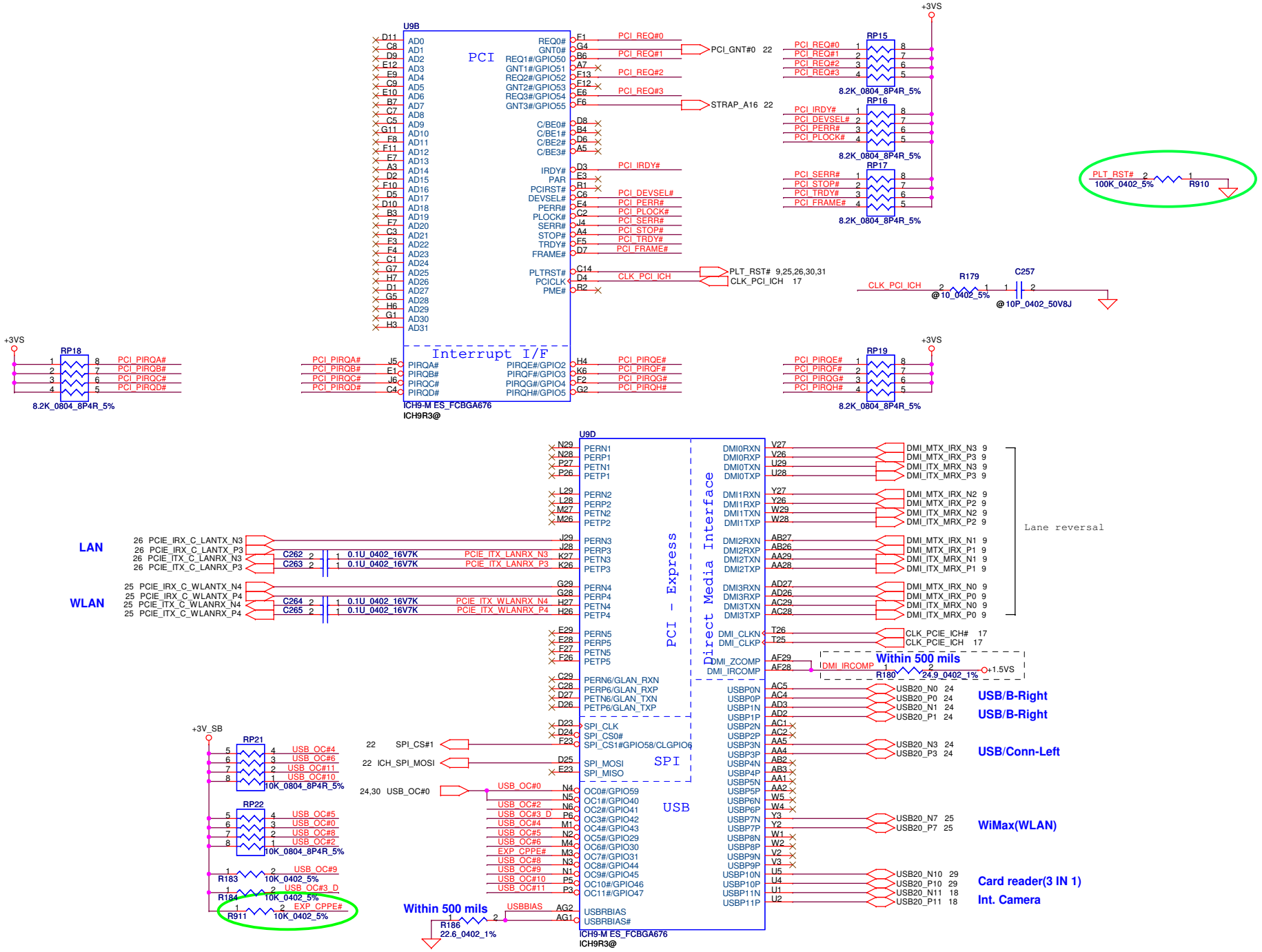

Security Classification	Compal Secret Data		
Issued Date	2009/07/28	Deciphered Date	2010/07/28

THIS SHEET OF ENGINEERING DRAWING IS THE PROPRIETARY PROPERTY OF COMPAL ELECTRONICS, INC. AND CONTAINS CONFIDENTIAL AND TRADE SECRET INFORMATION. THIS SHEET MAY NOT BE TRANSFERED FROM THE CUSTODY OF THE COMPETENT DIVISION OF R&D DEPARTMENT EXCEPT AS AUTHORIZED BY COMPAL ELECTRONICS, INC. NEITHER THIS SHEET NOR THE INFORMATION IT CONTAINS MAY BE USED BY OR DISCLOSED TO ANY THIRD PARTY WITHOUT PRIOR WRITTEN CONSENT OF COMPAL ELECTRONICS, INC.

Compal Electronics, Inc.

Title: ICH9M(1/4)-PCI

Size | Document Number: NBWAA LA5821P M/B | Rev: 1.0

Date: Monday, August 10, 2009 | Sheet 20 of 41

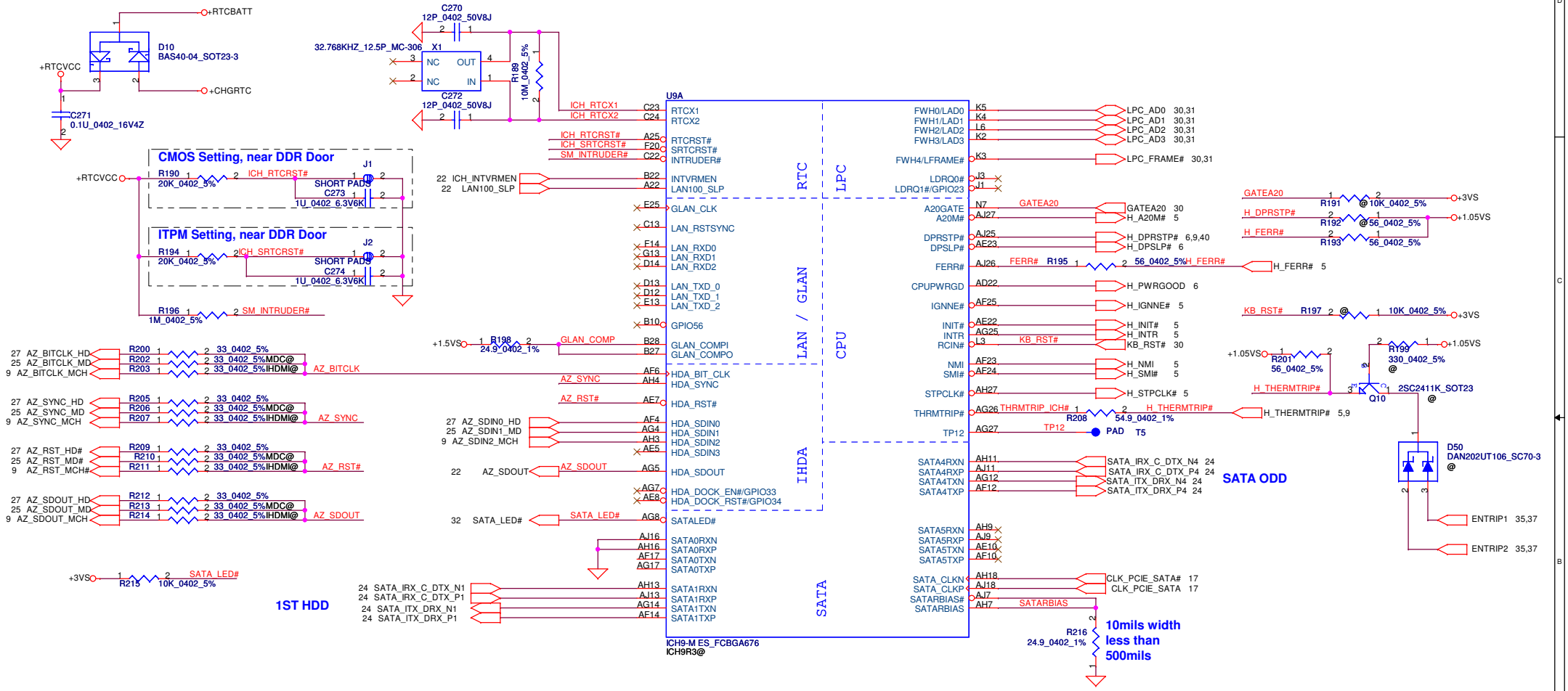

Security Classification	Compal Secret Data		
Issued Date	2009/07/28	Deciphered Date	2010/07/28

THIS SHEET OF ENGINEERING DRAWING IS THE PROPRIETARY PROPERTY OF COMPAL ELECTRONICS, INC. AND CONTAINS CONFIDENTIAL AND TRADE SECRET INFORMATION. THIS SHEET MAY NOT BE TRANSFERED FROM THE CUSTODY OF THE COMPETENT DIVISION OF R&D DEPARTMENT EXCEPT AS AUTHORIZED BY COMPAL ELECTRONICS, INC. NEITHER THIS SHEET NOR THE INFORMATION IT CONTAINS MAY BE USED BY OR DISCLOSED TO ANY THIRD PARTY WITHOUT PRIOR WRITTEN CONSENT OF COMPAL ELECTRONICS, INC.

Compal Electronics, Inc.

Title: ICH9M(2/4)-LAN,IDELPC,RTC

Size | Document Number: NBWAA LA5821P M/B | Rev: 1.0

Date: Monday, August 10, 2009 | Sheet 21 of 41

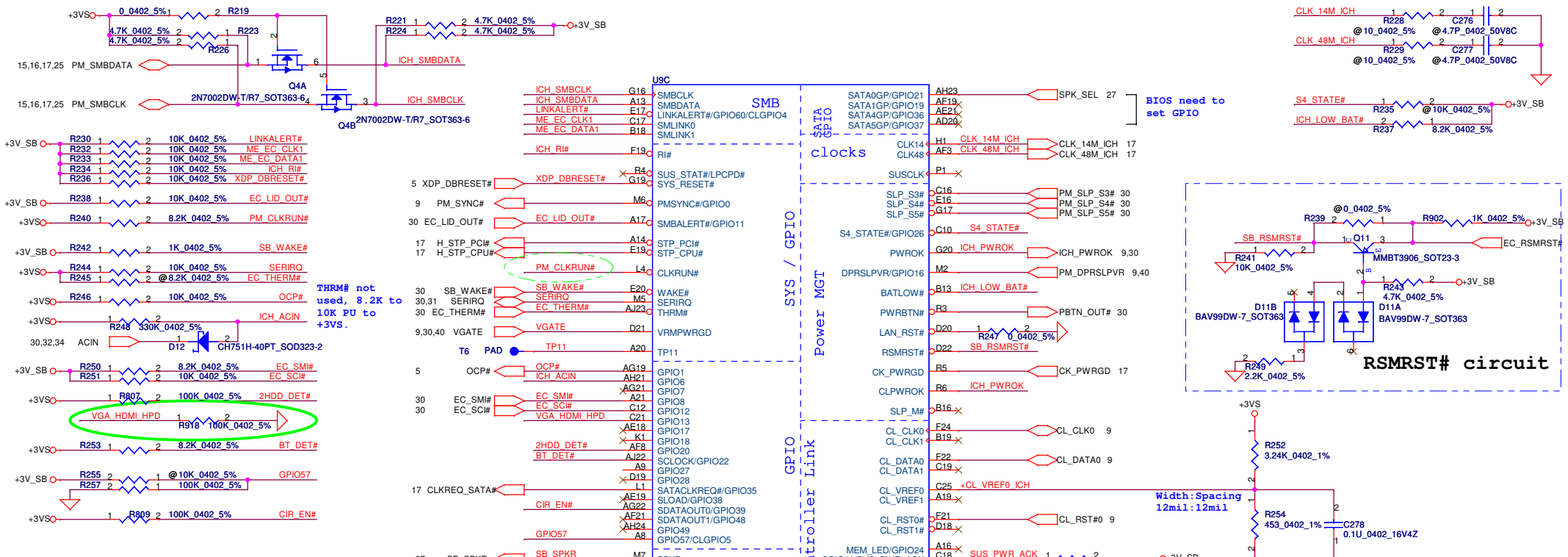

iTPM Physical Presence	
CLGPIO5 Mobil Platform	Assert = iTPM Physical Presence Enable De-assert = iTPM disable **Only used in iAMT w/ME Firmware
GPIO57	Desktop Platform used only

SUS_PWR_ACK	Mobile Platform used only
GPIO10	Desktop Platform used only

ICH9M Strap Pin

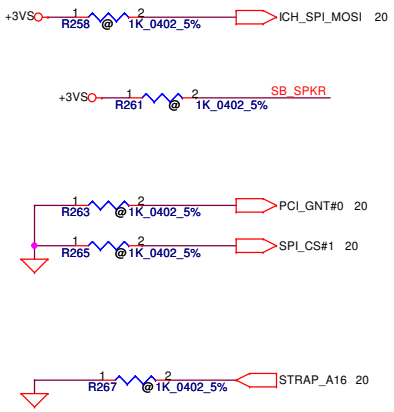

Internal TPM Strap(Internal pull-down)	
SPI_MOSI	Low= Disable High= iTPM enable by MCH strap*

No Reboot Strap (Internal pull-up)	
SB_SPKR	Low= *Default High= "No Reboot"

Boot BIOS Strap (Internal pull-up)		
PCI_GNT#0	SPI_CS#1	Boot BIOS Loaction
0	0	RESERVED
0	1	SPI
1	0	PCI
1	1	LPC* (Default)

A16 Swap Override Strap	
PCI_GNT#3	Low= A16 swap override Enable High= Default* (Internal pull-up)

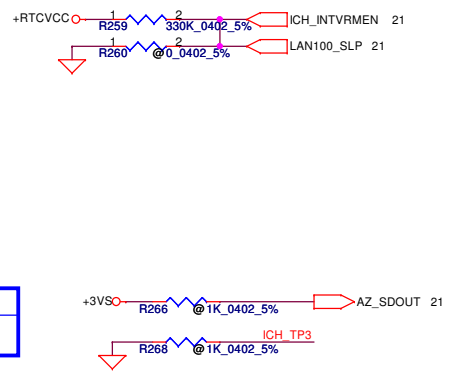

Internal VR Enable Strap (Internal VR for VccSus1.05, VccSus1.5, VccCL1.5)	
ICH_INTVRMEN	Low = Internal VR Disabled High = Internal VR Enabled(Default)

ICH8M LAN100 SLP Strap (Internal VR for VccLAN1.05 and VccCL1.05)	
ICH_LAN100_SLP	Low = Internal VR Disabled High = Internal VR Enabled(Default)

XOR Chain Entrance Strap		
ICH_TP3 (Internal pull-up)	HDA_SDOUT (Internal pull-down)	Description
0	0	RSVD
0	1	Enter XOR Chain
1	0	Normal Operation (Default)
1	1	Set PCIE port config bit 1

Flash Descriptor Security Override Strap	
GPIO33	Low= Descriptor Security override High= Default* (Internal pull-up)

DMI Termination Voltage	
GPIO49	Low= Desktop used High= Mobile* (Internal pull-up)

Security Classification	Compal Secret Data		
Issued Date	2009/07/28	Deciphered Date	2010/07/28

THIS SHEET OF ENGINEERING DRAWING IS THE PROPRIETARY PROPERTY OF COMPAL ELECTRONICS, INC. AND CONTAINS CONFIDENTIAL AND TRADE SECRET INFORMATION. THIS SHEET MAY NOT BE TRANSFERED FROM THE CUSTODY OF THE COMPETENT DIVISION OF R&D DEPARTMENT EXCEPT AS AUTHORIZED BY COMPAL ELECTRONICS, INC. NEITHER THIS SHEET NOR THE INFORMATION IT CONTAINS MAY BE USED BY OR DISCLOSED TO ANY THIRD PARTY WITHOUT PRIOR WRITTEN CONSENT OF COMPAL ELECTRONICS, INC.

Compal Electronics, Inc.

Title: ICH9M(3/4)-USB,GPIO,PCIE

Size | Document Number: NBWAA LA5821P M/B | Rev 1.0

Date: Monday, August 10, 2009 | Sheet 22 of 41

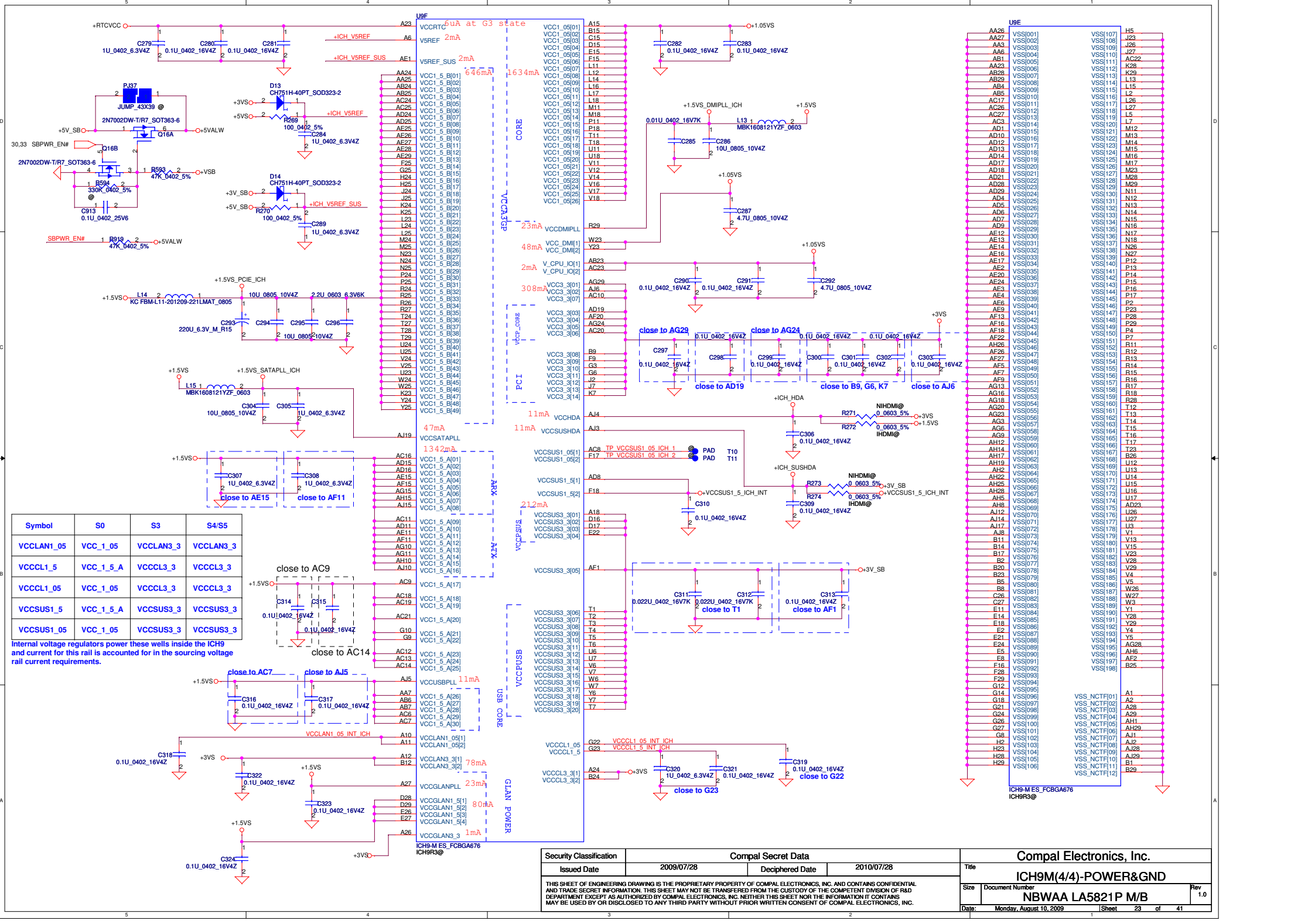

Symbol	S0	S3	S4/S5
VCCLAN1_05	VCC_1_05	VCCLAN3_3	VCCLAN3_3
VCCCL1_5	VCC_1_5_A	VCCCL3_3	VCCCL3_3
VCCCL1_05	VCC_1_05	VCCCL3_3	VCCCL3_3
VCCSUS1_5	VCC_1_5_A	VCCSUS3_3	VCCSUS3_3
VCCSUS1_05	VCC_1_05	VCCSUS3_3	VCCSUS3_3

Internal voltage regulators power these wells inside the ICH9 and current for this rail is accounted for in the sourcing voltage rail current requirements.

Security Classification	Compal Secret Data		
Issued Date	2009/07/28	Deciphered Date	2010/07/28

THIS SHEET OF ENGINEERING DRAWING IS THE PROPRIETARY PROPERTY OF COMPAL ELECTRONICS, INC. AND CONTAINS CONFIDENTIAL AND TRADE SECRET INFORMATION. THIS SHEET MAY NOT BE TRANSFERED FROM THE CUSTODY OF THE COMPETENT DIVISION OF R&D DEPARTMENT EXCEPT AS AUTHORIZED BY COMPAL ELECTRONICS, INC. NEITHER THIS SHEET NOR THE INFORMATION IT CONTAINS MAY BE USED BY OR DISCLOSED TO ANY THIRD PARTY WITHOUT PRIOR WRITTEN CONSENT OF COMPAL ELECTRONICS, INC.

Compal Electronics, Inc.

Title: ICH9M(4/4)-POWER&GND

Size | Document Number: NBWAA LA5821P M/B | Rev: 1.0

Date: Monday, August 10, 2009 | Sheet 23 of 41

SATA HDD Conn.

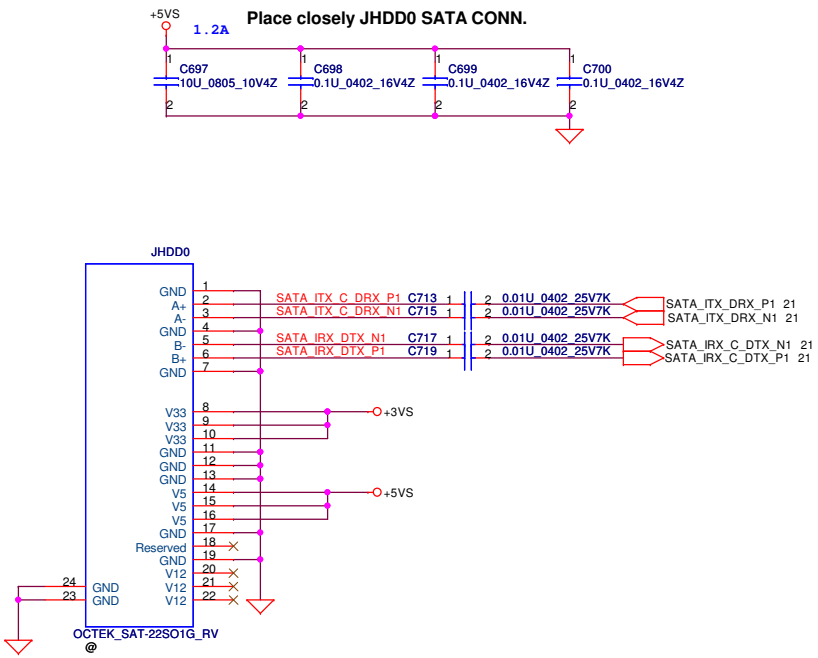

SATA ODD Conn

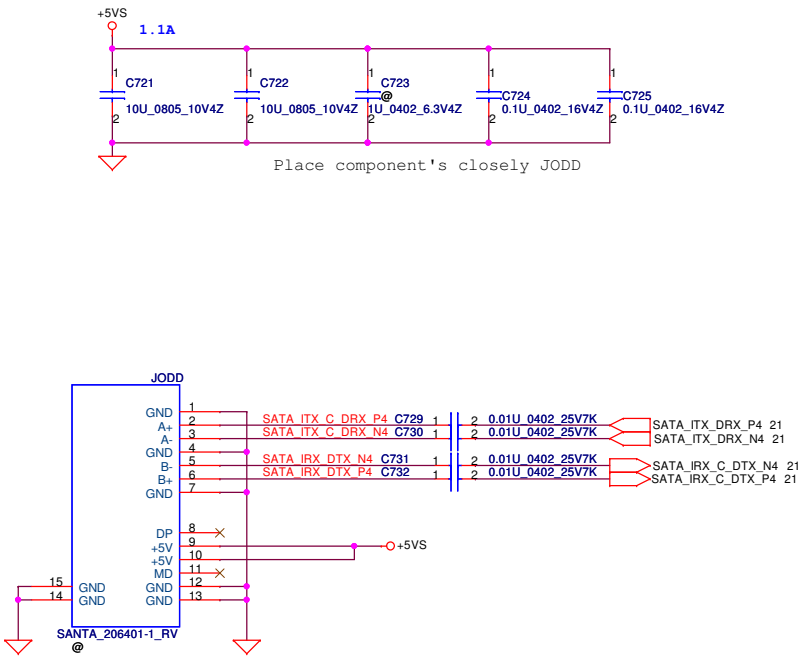

USB Board Conn

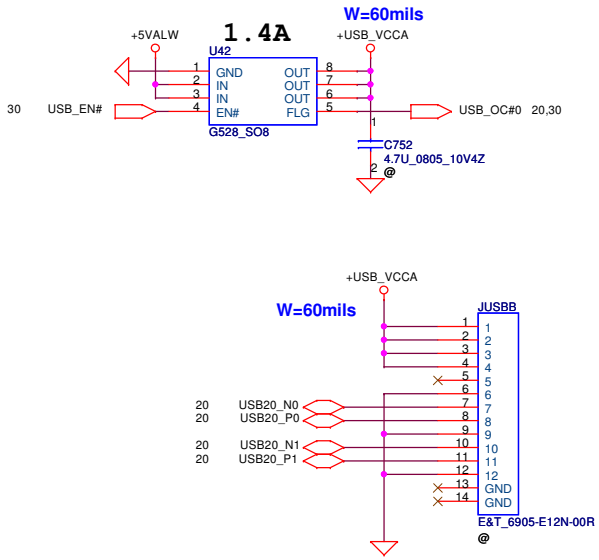

USB Left Conn

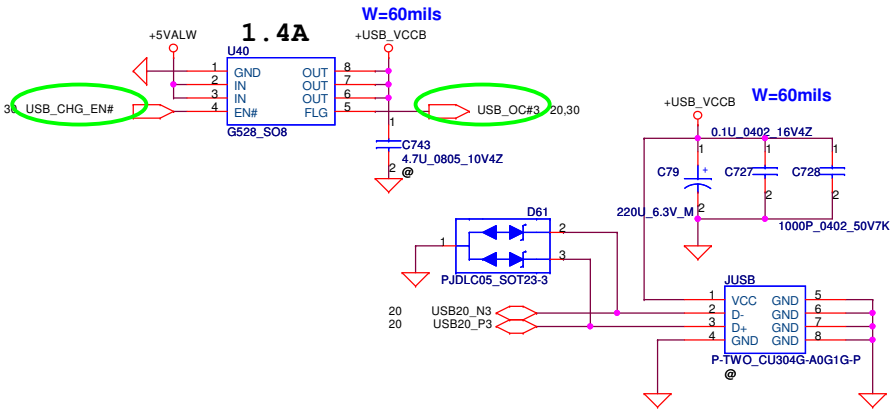

Security Classification	Compal Secret Data		
Issued Date	2009/07/28	Deciphered Date	2010/07/28

THIS SHEET OF ENGINEERING DRAWING IS THE PROPRIETARY PROPERTY OF COMPAL ELECTRONICS, INC. AND CONTAINS CONFIDENTIAL AND TRADE SECRET INFORMATION. THIS SHEET MAY NOT BE TRANSFERED FROM THE CUSTODY OF THE COMPETENT DIVISION OF R&D DEPARTMENT EXCEPT AS AUTHORIZED BY COMPAL ELECTRONICS, INC. NEITHER THIS SHEET NOR THE INFORMATION IT CONTAINS MAY BE USED BY OR DISCLOSED TO ANY THIRD PARTY WITHOUT PRIOR WRITTEN CONSENT OF COMPAL ELECTRONICS, INC.

Title: SATA-HDD/ODD& USB

Size | Document Number: NBWAA LA5821P M/B | Rev 1.0

Date: Thursday, August 06, 2009 | Sheet 24 of 41

PCIe Mini Card-WLAN

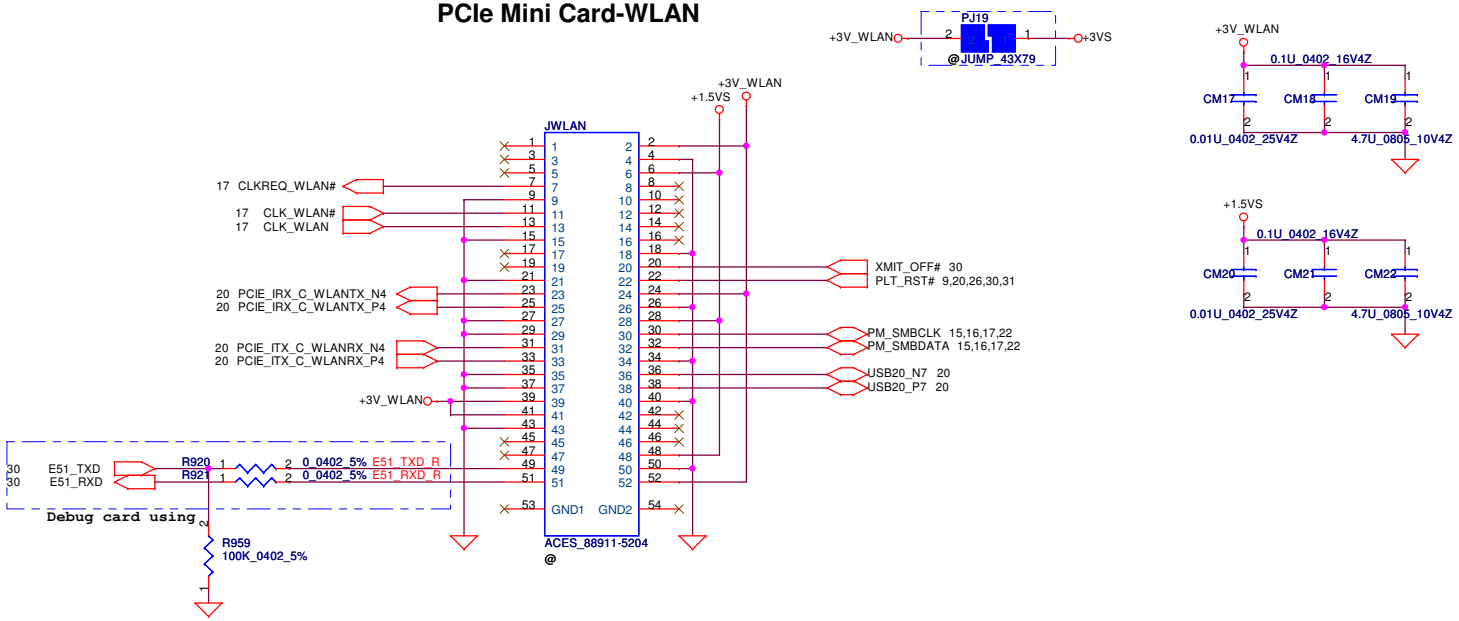

Int. Camera

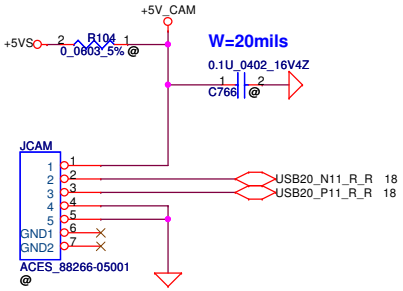

MDC 1.5 Conn.

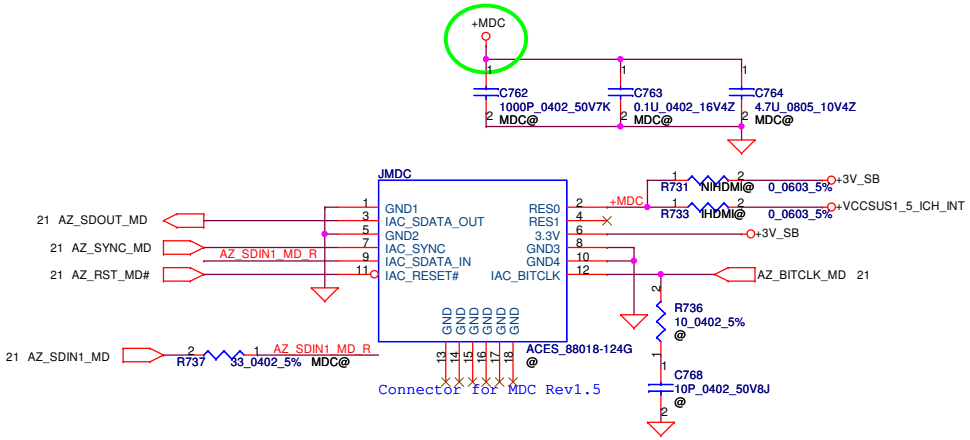

Security Classification	Compal Secret Data		
Issued Date	2009/07/28	Deciphered Date	2010/07/28

THIS SHEET OF ENGINEERING DRAWING IS THE PROPRIETARY PROPERTY OF COMPAL ELECTRONICS, INC. AND CONTAINS CONFIDENTIAL AND TRADE SECRET INFORMATION. THIS SHEET MAY NOT BE TRANSFERED FROM THE CUSTODY OF THE COMPETENT DIVISION OF R&D DEPARTMENT EXCEPT AS AUTHORIZED BY COMPAL ELECTRONICS, INC. NEITHER THIS SHEET NOR THE INFORMATION IT CONTAINS MAY BE USED BY OR DISCLOSED TO ANY THIRD PARTY WITHOUT PRIOR WRITTEN CONSENT OF COMPAL ELECTRONICS, INC.

Compal Electronics, Inc.

Title: **WLAN/MDC/CAMERA**

Size | Document Number: **NBWAA LA5821P M/B** | Rev: 1.0

Date: Monday, August 10, 2009 | Sheet 25 of 41

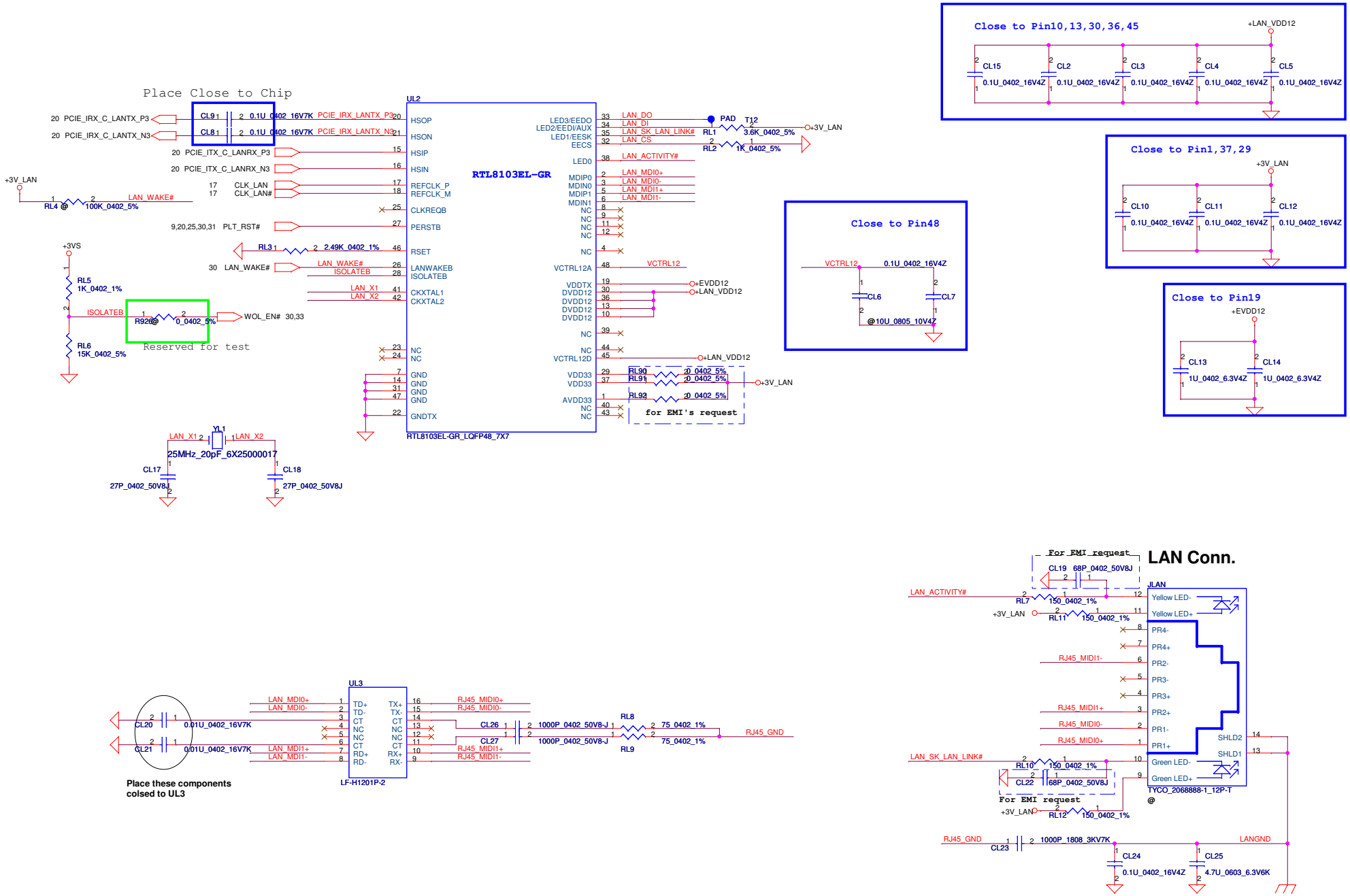

Security Classification	Compal Secret Data		
Issued Date	2009/07/28	Deciphered Date	2010/07/28

THIS SHEET OF ENGINEERING DRAWING IS THE PROPRIETARY PROPERTY OF COMPAL ELECTRONICS, INC. AND CONTAINS CONFIDENTIAL AND TRADE SECRET INFORMATION. THIS SHEET MAY NOT BE TRANSFERED FROM THE CUSTODY OF THE COMPETENT DIVISION OF R&D DEPARTMENT EXCEPT AS AUTHORIZED BY COMPAL ELECTRONICS, INC. NEITHER THIS SHEET NOR THE INFORMATION IT CONTAINS MAY BE USED BY OR DISCLOSED TO ANY THIRD PARTY WITHOUT PRIOR WRITTEN CONSENT OF COMPAL ELECTRONICS, INC.

Compal Electronics, Inc.

Title: **RTL8103EL 10/100 LAN**

Size	Document Number	Rev
Custom	NBWAA LA5821P M/B	1.0

Date: Thursday, August 06, 2009 | Sheet 26 of 41

Codec

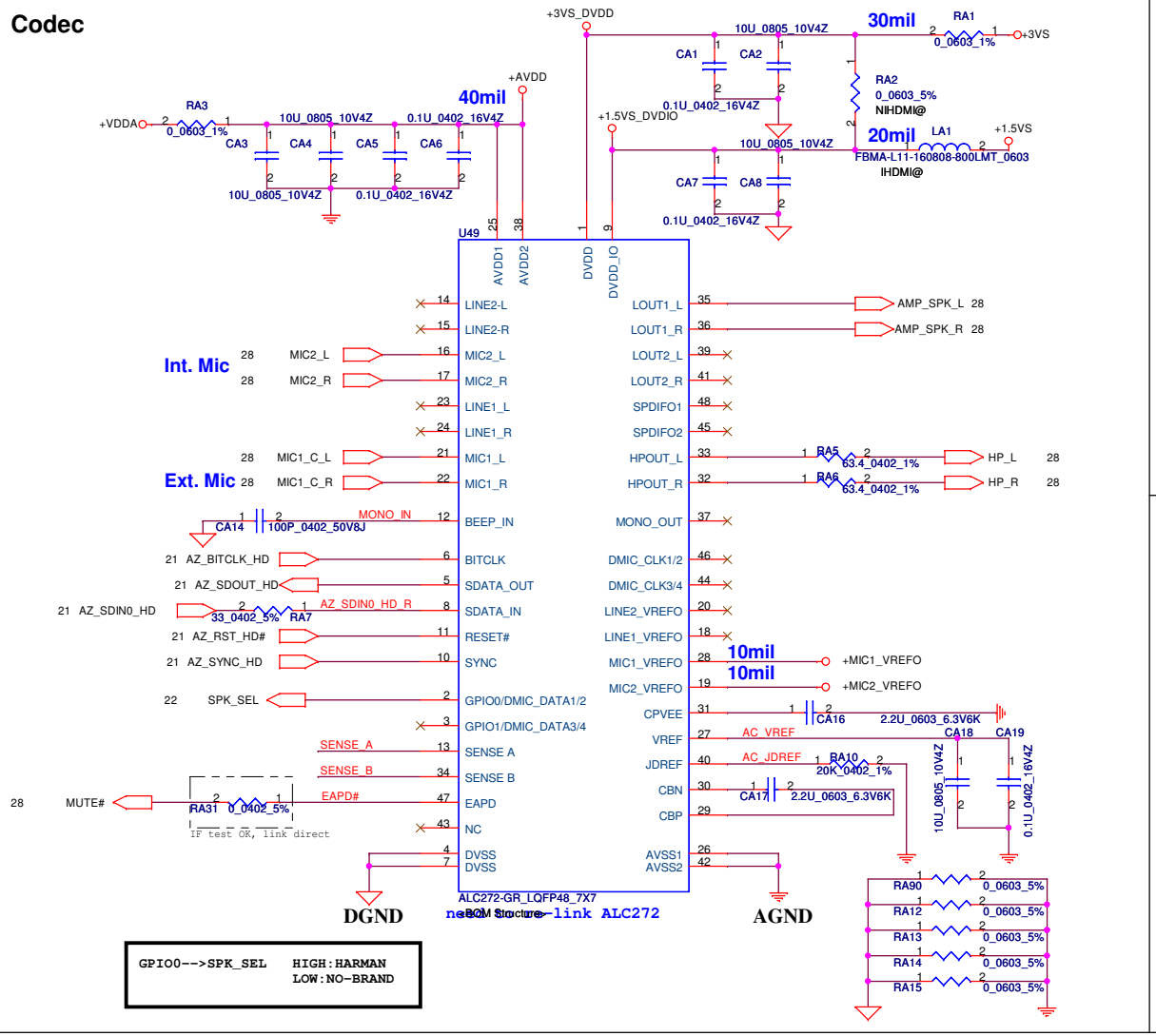

GPIO0-->SPK_SEL	HIGH:HARMAN
	LOW:NO-BRAND

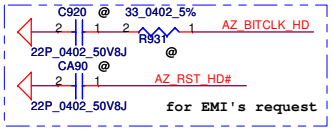

Beep sound

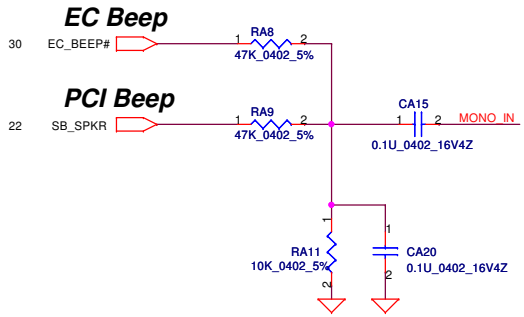

Sense Pin	Impedance	Codec Signals	Function
SENSE A	39.2K	PORT-A (PIN 39, 41)	
	20K	PORT-B (PIN 21, 22)	Ext. MIC
	10K	PORT-C (PIN 23, 24)	FM tuner
	5.1K	PORT-D (PIN 35, 36)	SPK out
SENSE B	39.2K	PORT-E (PIN 14, 15)	
	20K	PORT-F (PIN 16, 17)	Int. MIC
	10K	PORT-H (PIN 37)	
	5.1K	PORT-I (PIN 32, 33)	Headphone out

place close to chip

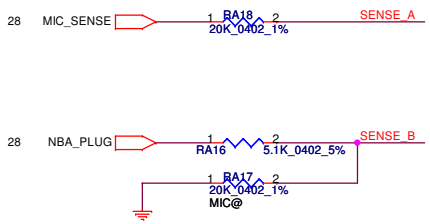

THIS SHEET OF ENGINEERING DRAWING IS THE PROPRIETARY PROPERTY OF COMPAL ELECTRONICS, INC. AND CONTAINS CONFIDENTIAL AND TRADE SECRET INFORMATION. THIS SHEET MAY NOT BE TRANSFERED FROM THE CUSTODY OF THE COMPETENT DIVISION OF R&D DEPARTMENT EXCEPT AS AUTHORIZED BY COMPAL ELECTRONICS, INC. NEITHER THIS SHEET NOR THE INFORMATION IT CONTAINS MAY BE USED BY OR DISCLOSED TO ANY THIRD PARTY WITHOUT PRIOR WRITTEN CONSENT OF COMPAL ELECTRONICS, INC.

Security Classification	Compal Secret Data		
Issued Date	2009/07/28	Deciphered Date	2010/07/28

Compal Electronics, Inc.

Title: HD CODEC ALC272

Size | Document Number: NBWAA LA5821P M/B | Rev: 1.0

Date: Monday, August 10, 2009 | Sheet 27 of 41

TPA6017 Medium Range Amplifier

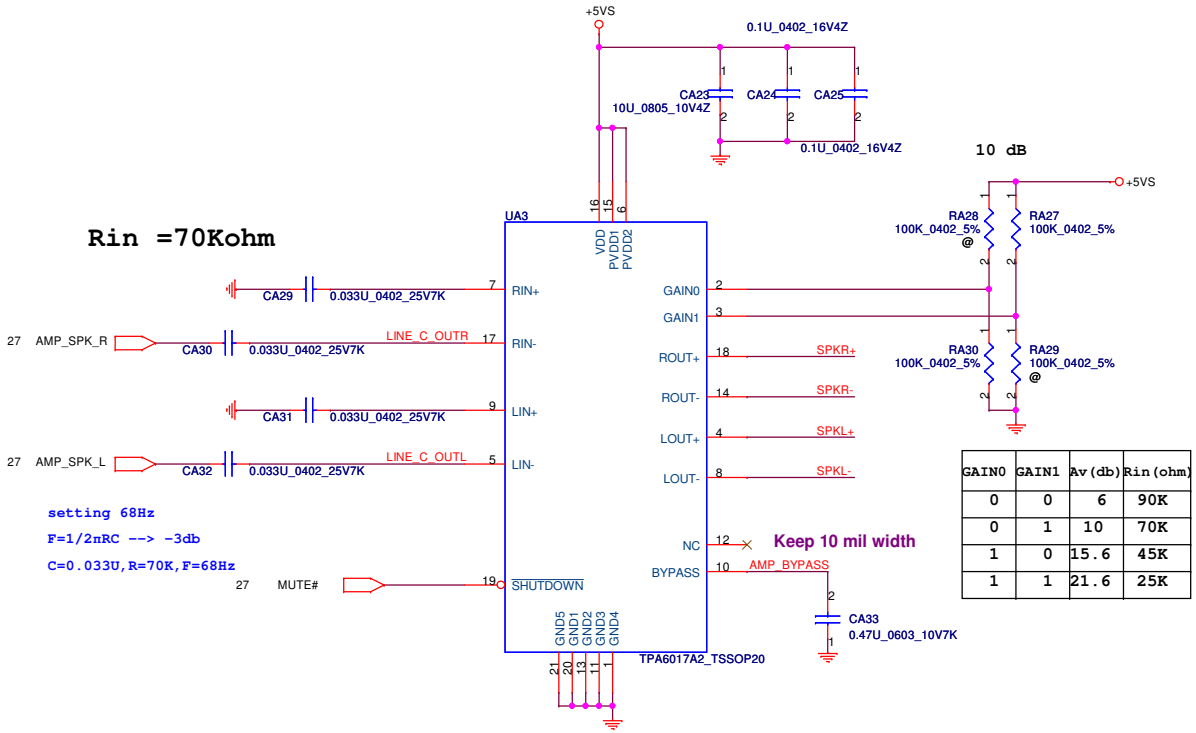

GAIN0	GAIN1	Av(db)	Rin(ohm)
0	0	6	90K
0	1	10	70K
1	0	15.6	45K
1	1	21.6	25K

Ext. Mic

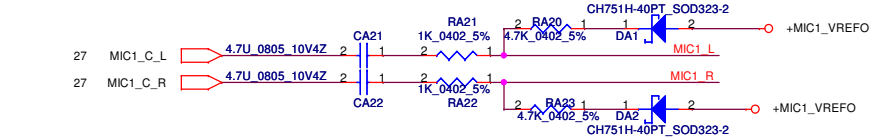

Int. Mic

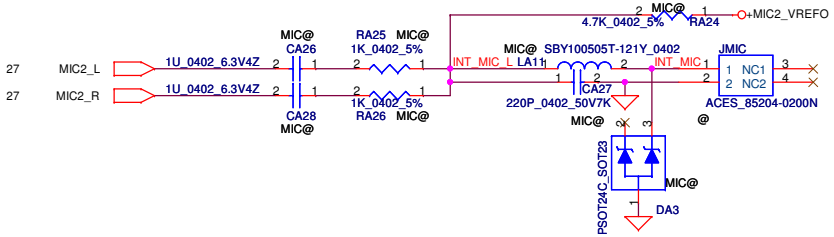

Left Connector

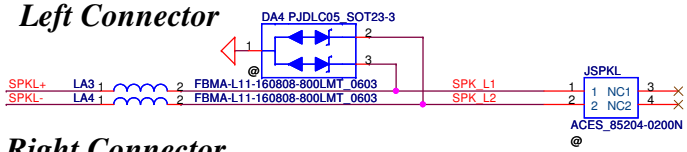

Right Connector

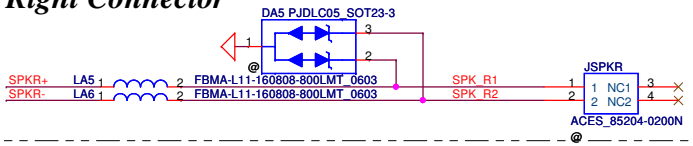

HeadPhone/LINE Out JACK

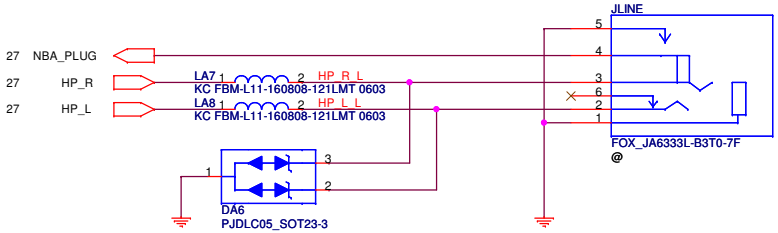

Ext.MIC/LINE IN JACK

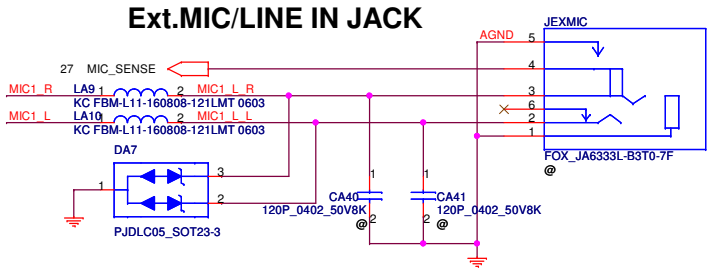

Volume Control

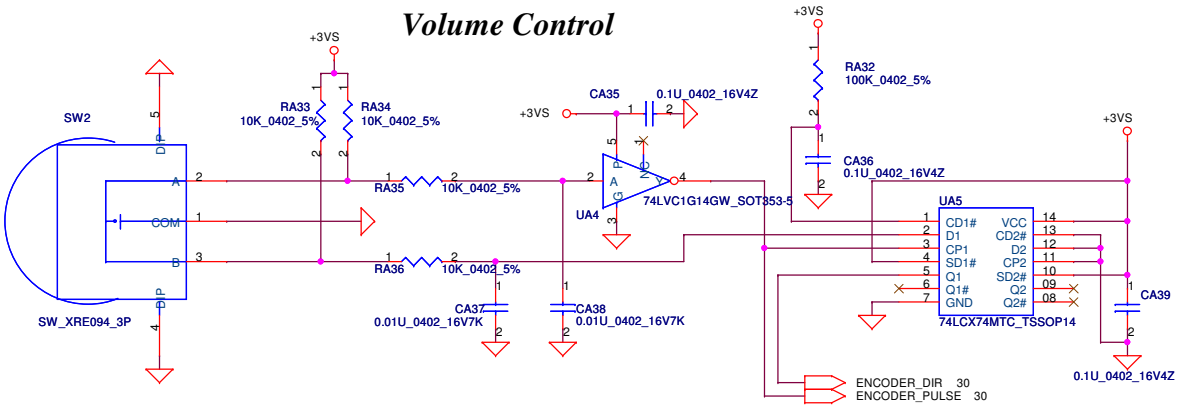

Security Classification	Compal Secret Data		
Issued Date	2009/07/28	Deciphered Date	2010/07/28

THIS SHEET OF ENGINEERING DRAWING IS THE PROPRIETARY PROPERTY OF COMPAL ELECTRONICS, INC. AND CONTAINS CONFIDENTIAL AND TRADE SECRET INFORMATION. THIS SHEET MAY NOT BE TRANSFERED FROM THE CUSTODY OF THE COMPETENT DIVISION OF R&D DEPARTMENT EXCEPT AS AUTHORIZED BY COMPAL ELECTRONICS, INC. NEITHER THIS SHEET NOR THE INFORMATION IT CONTAINS MAY BE USED BY OR DISCLOSED TO ANY THIRD PARTY WITHOUT PRIOR WRITTEN CONSENT OF COMPAL ELECTRONICS, INC.

Title: AUDIO AMP/MIC/SPK/VR

Size | Document Number: NBWAA LA5821P M/B | Rev: 1.0

Date: Thursday, August 06, 2009 | Sheet 28 of 41

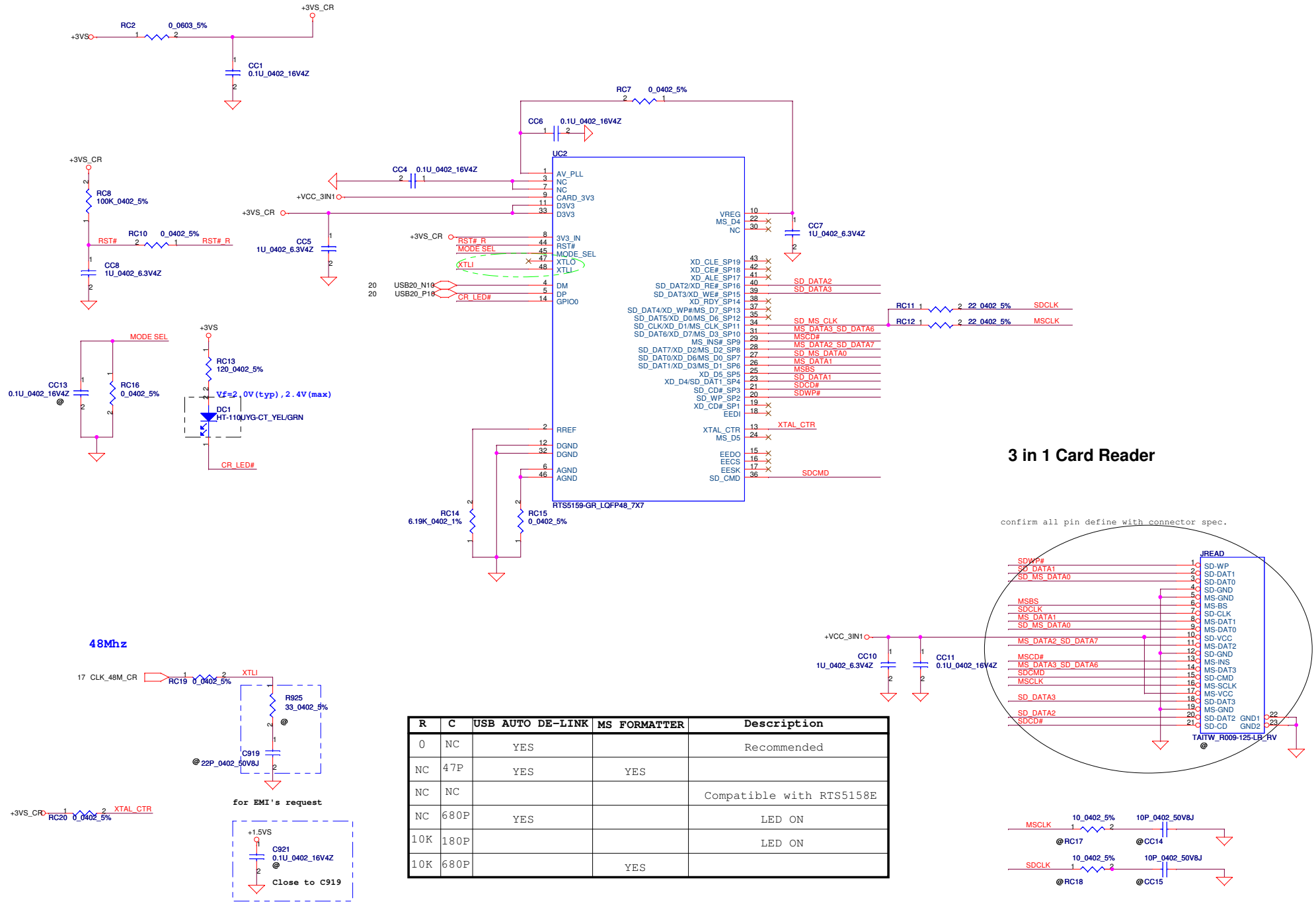

R	C	USB AUTO DE-LINK	MS FORMATTER	Description
0	NC	YES		Recommended
NC	47P	YES	YES	
NC	NC			Compatible with RTS5158E
NC	680P	YES		LED ON
10K	180P			LED ON
10K	680P		YES	

Security Classification	Compal Secret Data		
Issued Date	2009/07/28	Deciphered Date	2010/07/28

THIS SHEET OF ENGINEERING DRAWING IS THE PROPRIETARY PROPERTY OF COMPAL ELECTRONICS, INC. AND CONTAINS CONFIDENTIAL AND TRADE SECRET INFORMATION. THIS SHEET MAY NOT BE TRANSFERED FROM THE CUSTODY OF THE COMPETENT DIVISION OF R&D DEPARTMENT EXCEPT AS AUTHORIZED BY COMPAL ELECTRONICS, INC. NEITHER THIS SHEET NOR THE INFORMATION IT CONTAINS MAY BE USED BY OR DISCLOSED TO ANY THIRD PARTY WITHOUT PRIOR WRITTEN CONSENT OF COMPAL ELECTRONICS, INC.

Compal Electronics, Inc.

Title: RTS5159 Card Reader

Size: Custom | Document Number: NBWAA LA5821P M/B | Rev: 1.0

Date: Monday, August 10, 2009 | Sheet 29 of 41

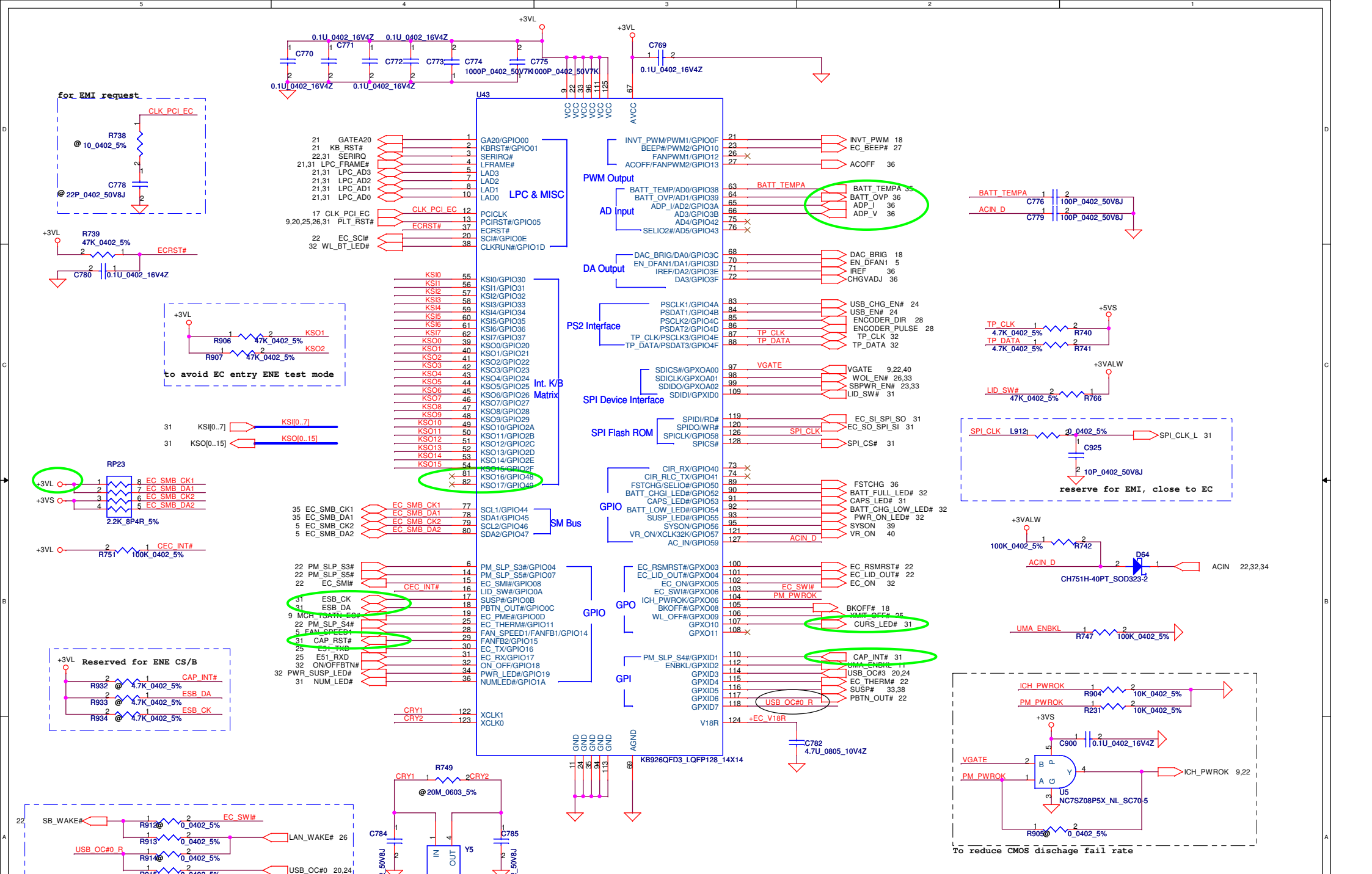

Security Classification	Compal Secret Data		
Issued Date	2009/07/28	Deciphered Date	2010/07/28

THIS SHEET OF ENGINEERING DRAWING IS THE PROPRIETARY PROPERTY OF COMPAL ELECTRONICS, INC. AND CONTAINS CONFIDENTIAL AND TRADE SECRET INFORMATION. THIS SHEET MAY NOT BE TRANSFERED FROM THE CUSTODY OF THE COMPETENT DIVISION OF R&D DEPARTMENT EXCEPT AS AUTHORIZED BY COMPAL ELECTRONICS, INC. NEITHER THIS SHEET NOR THE INFORMATION IT CONTAINS MAY BE USED BY OR DISCLOSED TO ANY THIRD PARTY WITHOUT PRIOR WRITTEN CONSENT OF COMPAL ELECTRONICS, INC.

Compal Electronics, Inc.

Title: ENE-KB926 RevD3

Size | Document Number: NBWAA LA5821P M/B | Rev: 1.0

Date: Monday, August 10, 2009 | Sheet 30 of 41

SPI Flash (16Mb*1)

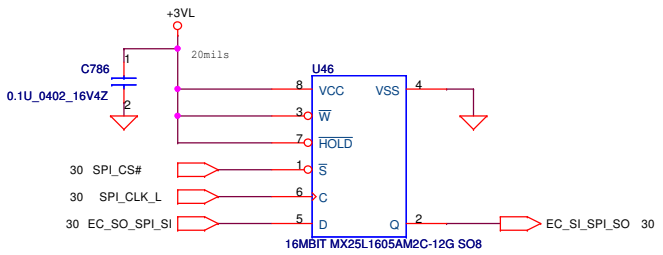

Lid SW

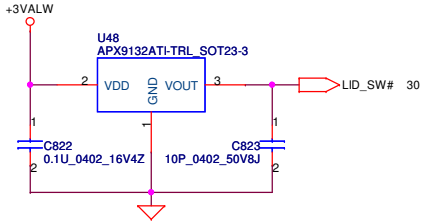

LPC Debug Port

Please place the PAD under DDR DIMM.

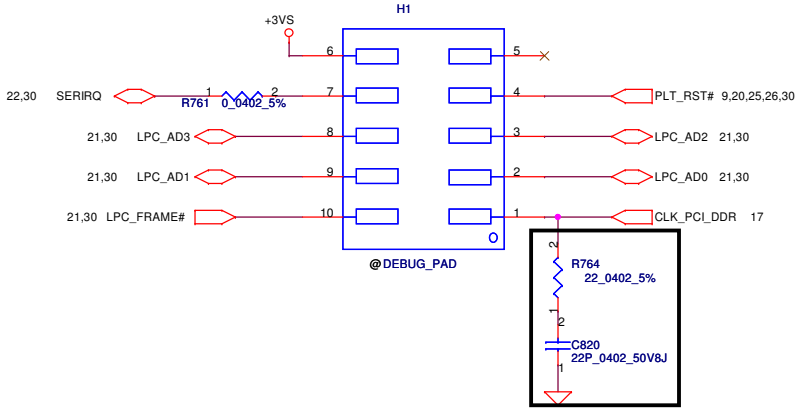

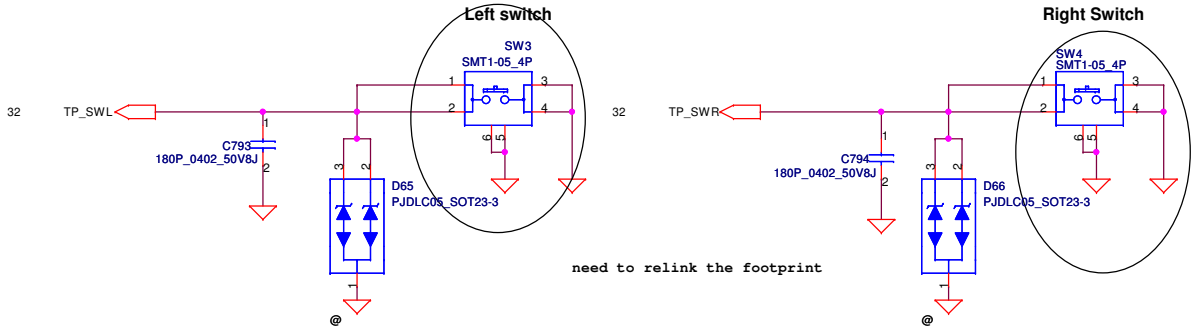

KEYBOARD CONN.

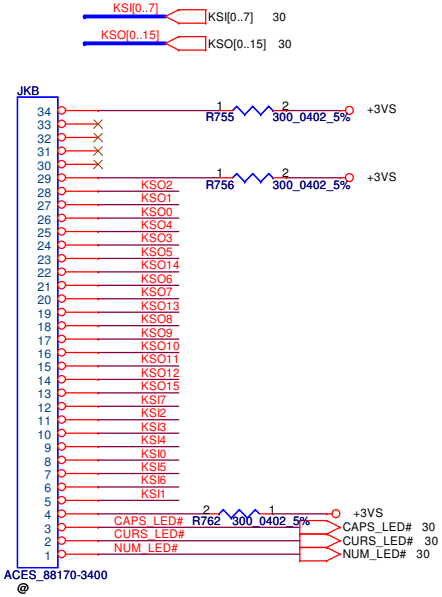

please close to JKB

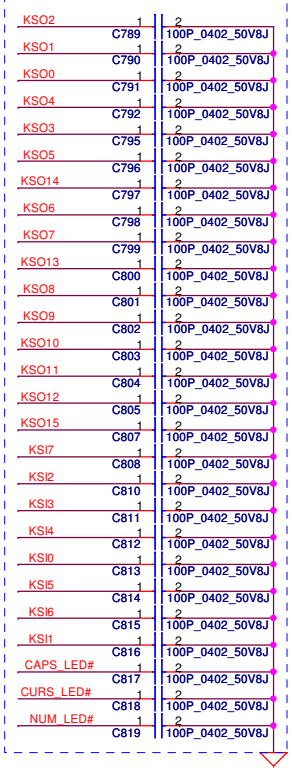

CS/B Connector

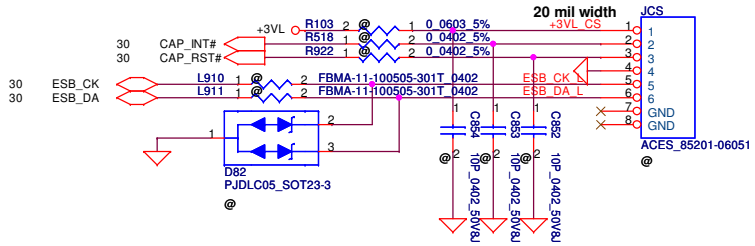

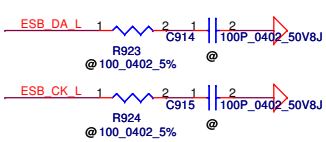

Security Classification	Compal Secret Data		
Issued Date	2009/07/28	Deciphered Date	2010/07/28

THIS SHEET OF ENGINEERING DRAWING IS THE PROPRIETARY PROPERTY OF COMPAL ELECTRONICS, INC. AND CONTAINS CONFIDENTIAL AND TRADE SECRET INFORMATION. THIS SHEET MAY NOT BE TRANSFERED FROM THE CUSTODY OF THE COMPETENT DIVISION OF R&D DEPARTMENT EXCEPT AS AUTHORIZED BY COMPAL ELECTRONICS, INC. NEITHER THIS SHEET NOR THE INFORMATION IT CONTAINS MAY BE USED BY OR DISCLOSED TO ANY THIRD PARTY WITHOUT PRIOR WRITTEN CONSENT OF COMPAL ELECTRONICS, INC.

Compal Electronics, Inc.

Title: SPI ROM/TP/KB/Debug/CS Board

Size | Document Number: NBWAA LA5821P M/B | Rev 1.0

Date: Monday, August 10, 2009 | Sheet 31 of 41

Power Button

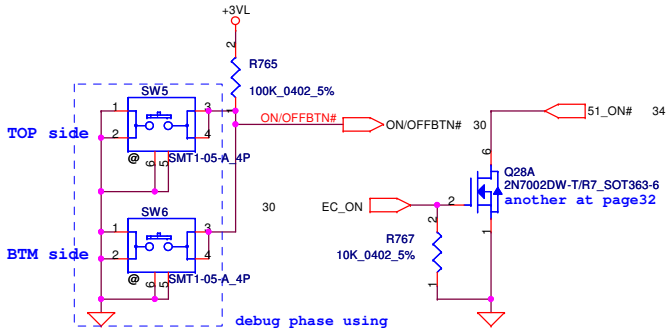

Touch Pad Connector

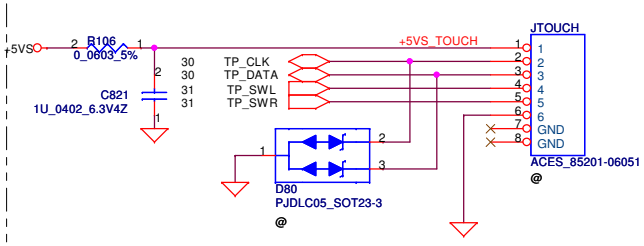

ISPD

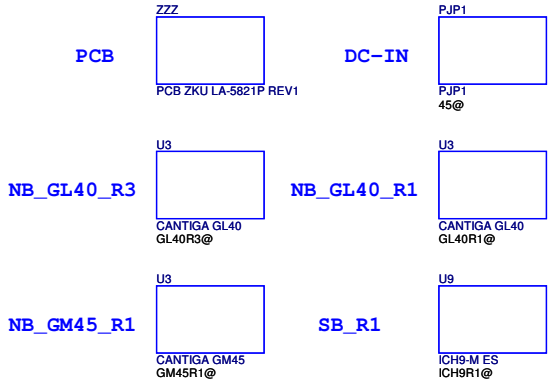

DC-IN LED

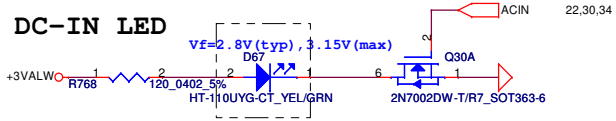

PWR/B

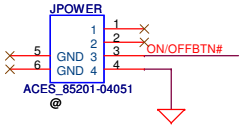

BATT CHARGE/FULL LED

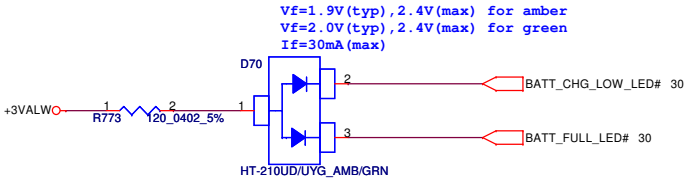

Screw Hole

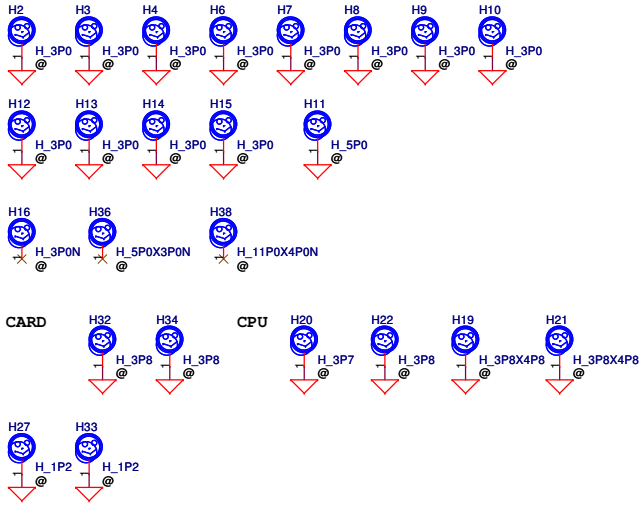

WLAN LED

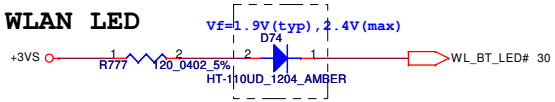

POWER/SUSPEND LED

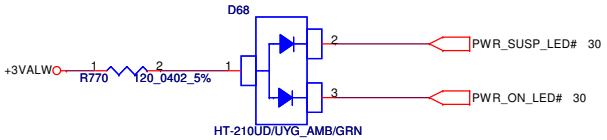

HDD LED

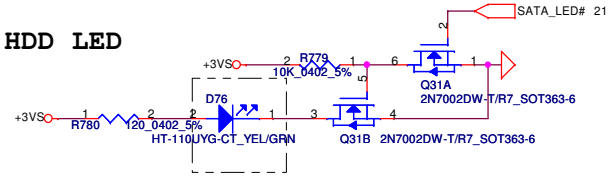

PCB Fedical Mark PAD

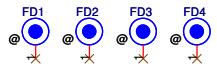

Security Classification	Compal Secret Data		
Issued Date	2009/07/28	Deciphered Date	2010/07/28

THIS SHEET OF ENGINEERING DRAWING IS THE PROPRIETARY PROPERTY OF COMPAL ELECTRONICS, INC. AND CONTAINS CONFIDENTIAL AND TRADE SECRET INFORMATION. THIS SHEET MAY NOT BE TRANSFERED FROM THE CUSTODY OF THE COMPETENT DIVISION OF R&D DEPARTMENT EXCEPT AS AUTHORIZED BY COMPAL ELECTRONICS, INC. NEITHER THIS SHEET NOR THE INFORMATION IT CONTAINS MAY BE USED BY OR DISCLOSED TO ANY THIRD PARTY WITHOUT PRIOR WRITTEN CONSENT OF COMPAL ELECTRONICS, INC.

Compal Electronics, Inc.

Title: Comm. SW/ Sub Conn./LEDS/ISPD

Size | Document Number: NBWAA LA5821P M/B | Rev 1.0

Date: Monday, August 10, 2009 | Sheet 32 of 41

+3VALW TO +3VS

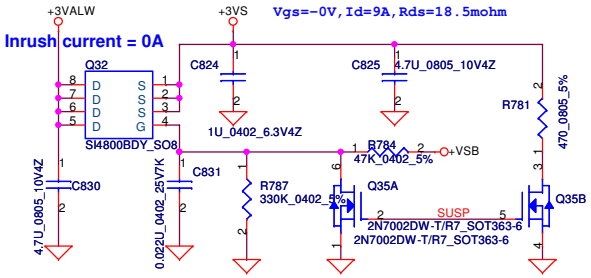

+5VALW TO +5VS

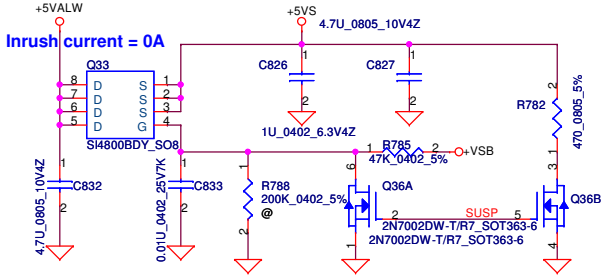

+3VALW TO +3V_LAN

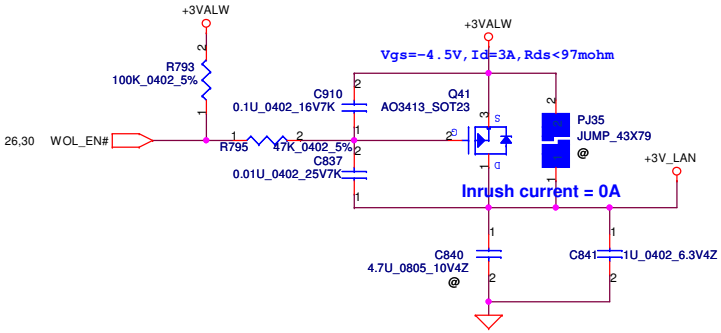

+3VALW TO +3V_SB

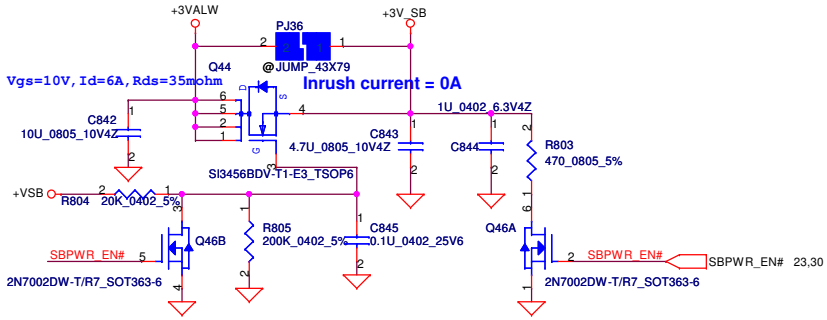

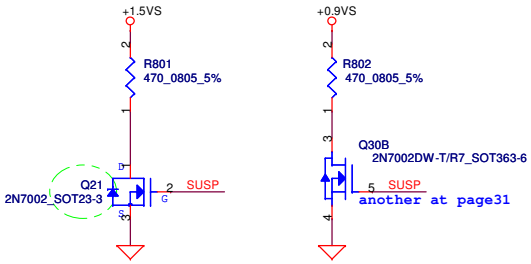

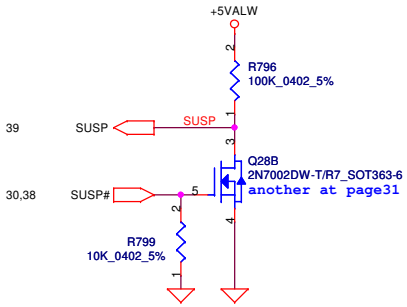

Security Classification	Compal Secret Data		
Issued Date	2009/07/28	Deciphered Date	2010/07/28

THIS SHEET OF ENGINEERING DRAWING IS THE PROPRIETARY PROPERTY OF COMPAL ELECTRONICS, INC. AND CONTAINS CONFIDENTIAL AND TRADE SECRET INFORMATION. THIS SHEET MAY NOT BE TRANSFERED FROM THE CUSTODY OF THE COMPETENT DIVISION OF R&D DEPARTMENT EXCEPT AS AUTHORIZED BY COMPAL ELECTRONICS, INC. NEITHER THIS SHEET NOR THE INFORMATION IT CONTAINS MAY BE USED BY OR DISCLOSED TO ANY THIRD PARTY WITHOUT PRIOR WRITTEN CONSENT OF COMPAL ELECTRONICS, INC.

Compal Electronics, Inc.

Title: DC-DC INTERFACE

Size | Document Number: NBWAA LA5821P M/B | Rev: 1.0

Date: Monday, August 10, 2009 | Sheet 33 of 41

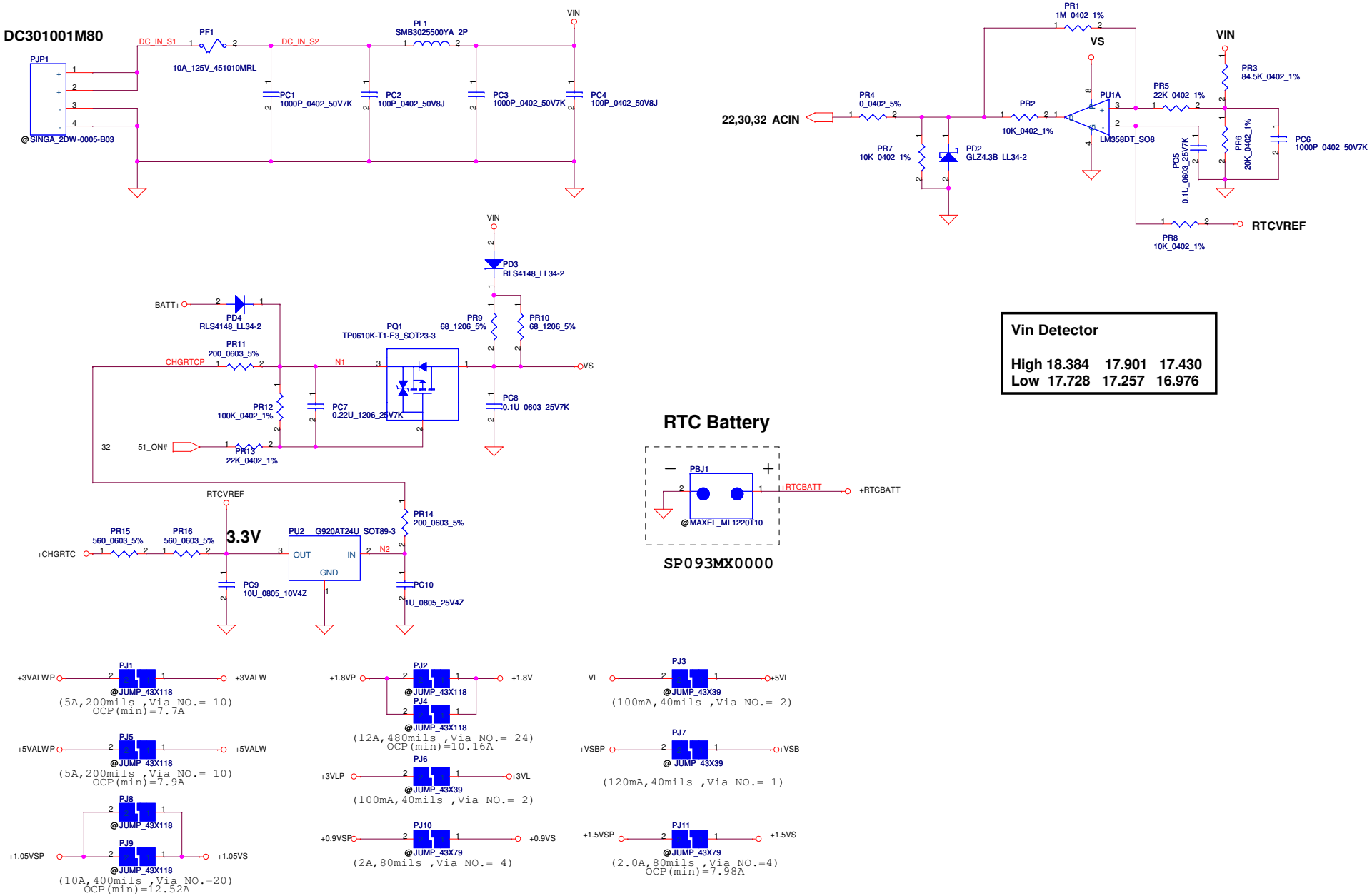

Security Classification	Compal Secret Data		
Issued Date	2009/07/28	Deciphered Date	2010/07/28

THIS SHEET OF ENGINEERING DRAWING IS THE PROPRIETARY PROPERTY OF COMPAL ELECTRONICS, INC. AND CONTAINS CONFIDENTIAL AND TRADE SECRET INFORMATION. THIS SHEET MAY NOT BE TRANSFERED FROM THE CUSTODY OF THE COMPETENT DIVISION OF R&D DEPARTMENT EXCEPT AS AUTHORIZED BY COMPAL ELECTRONICS, INC. NEITHER THIS SHEET NOR THE INFORMATION IT CONTAINS MAY BE USED BY OR DISCLOSED TO ANY THIRD PARTY WITHOUT PRIOR WRITTEN CONSENT OF COMPAL ELECTRONICS, INC.

Compal Electronics, Inc.

Title: DCIN & DETECTOR

Size | Document Number: KTKAA | Rev: 1.0

Date: Monday, August 10, 2009 | Sheet 34 of 41

PH1 under CPU botten side :
CPU thermal protection at 92 degree C
Recovery at 56 degree C

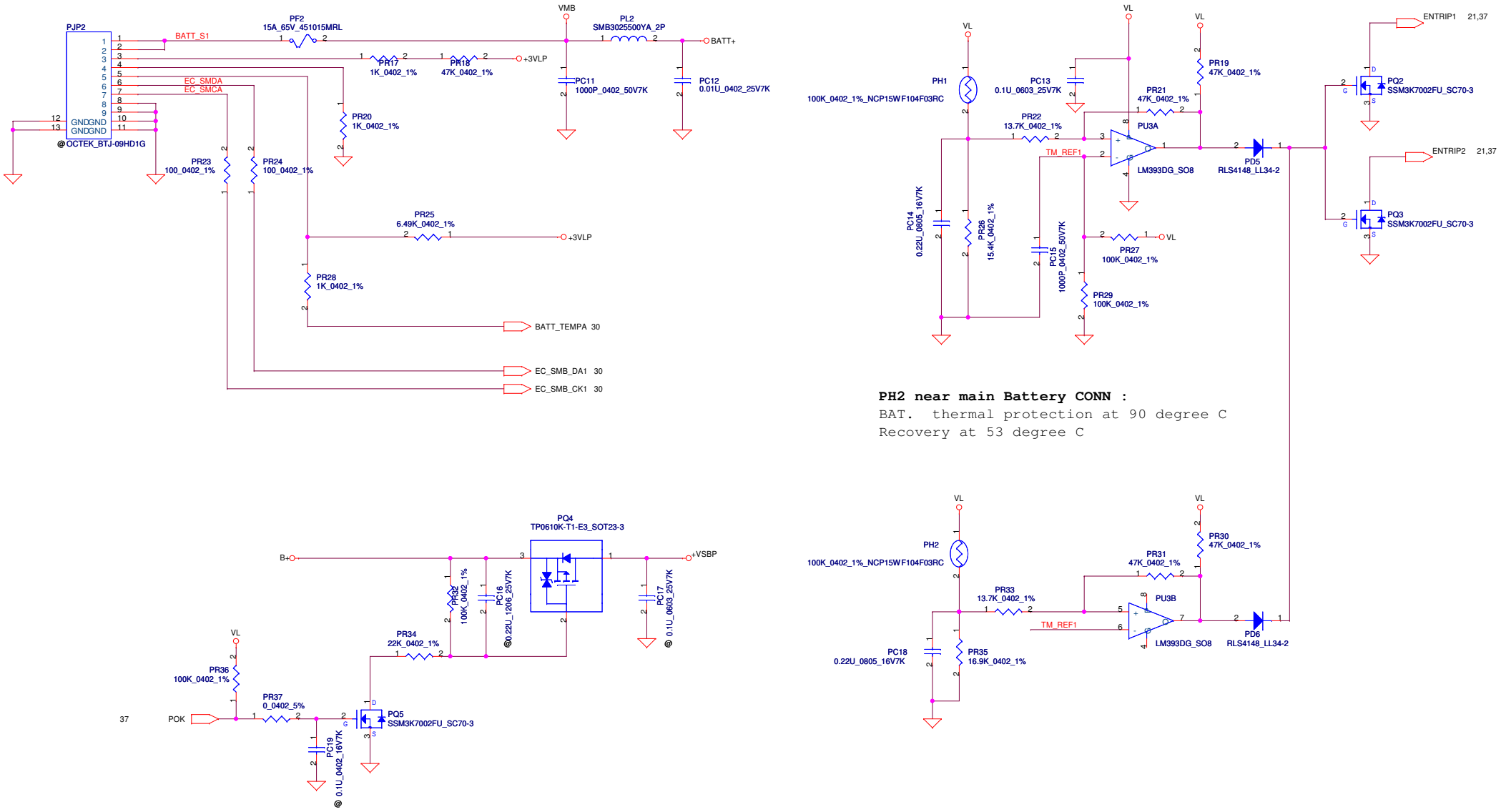

PH2 near main Battery CONN :
BAT. thermal protection at 90 degree C
Recovery at 53 degree C

Security Classification	Compal Secret Data		
Issued Date	2009/07/28	Deciphered Date	2010/07/28

THIS SHEET OF ENGINEERING DRAWING IS THE PROPRIETARY PROPERTY OF COMPAL ELECTRONICS, INC. AND CONTAINS CONFIDENTIAL AND TRADE SECRET INFORMATION. THIS SHEET MAY NOT BE TRANSFERED FROM THE CUSTODY OF THE COMPETENT DIVISION OF R&D DEPARTMENT EXCEPT AS AUTHORIZED BY COMPAL ELECTRONICS, INC. NEITHER THIS SHEET NOR THE INFORMATION IT CONTAINS MAY BE USED BY OR DISCLOSED TO ANY THIRD PARTY WITHOUT PRIOR WRITTEN CONSENT OF COMPAL ELECTRONICS, INC.

Compal Electronics, Inc.

Title: BATTERY CONN / OTP

Size: | Document Number: KTKAA | Rev: 1.0

Date: Monday, August 10, 2009 | Sheet 35 of 41

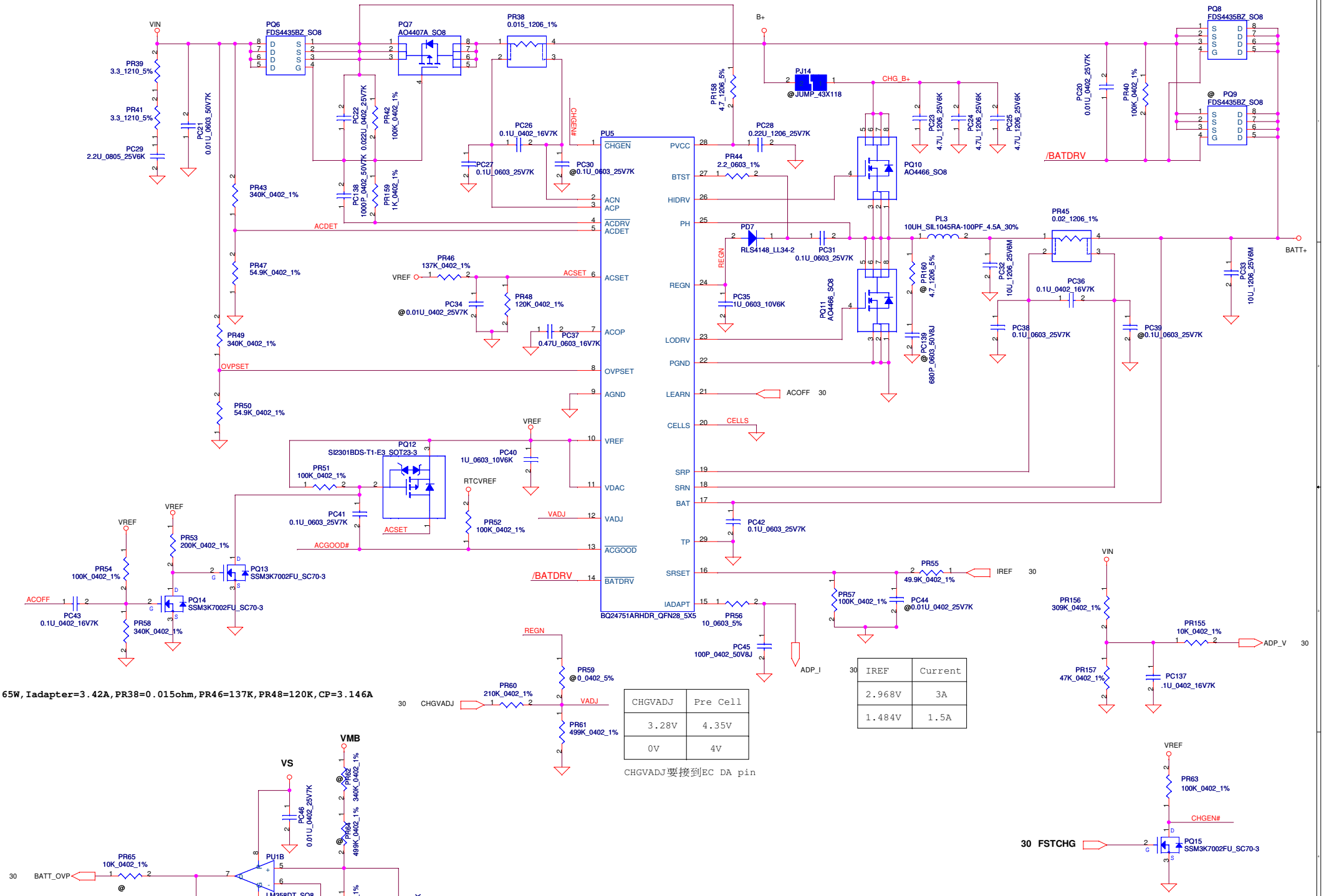

65W,Iadapter=3.42A,PR38=0.015ohm,PR46=137K,PR48=120K,CP=3.146A

CHGVADJ	Pre Cell
3.28V	4.35V
0V	4V

CHGVADJ要接到EC DA pin

IREF	Current
2.968V	3A
1.484V	1.5A

Security Classification	Compal Secret Data		
Issued Date	2009/07/28	Deciphered Date	2010/07/28

THIS SHEET OF ENGINEERING DRAWING IS THE PROPRIETARY PROPERTY OF COMPAL ELECTRONICS, INC. AND CONTAINS CONFIDENTIAL AND TRADE SECRET INFORMATION. THIS SHEET MAY NOT BE TRANSFERED FROM THE CUSTODY OF THE COMPETENT DIVISION OF R&D DEPARTMENT EXCEPT AS AUTHORIZED BY COMPAL ELECTRONICS, INC. NEITHER THIS SHEET NOR THE INFORMATION IT CONTAINS MAY BE USED BY OR DISCLOSED TO ANY THIRD PARTY WITHOUT PRIOR WRITTEN CONSENT OF COMPAL ELECTRONICS, INC.

Compal Electronics, Inc.

Title: CHARGER

Size | Document Number: KTKAA | Rev: 1.0

Date: Monday, August 10, 2009 | Sheet 36 of 41

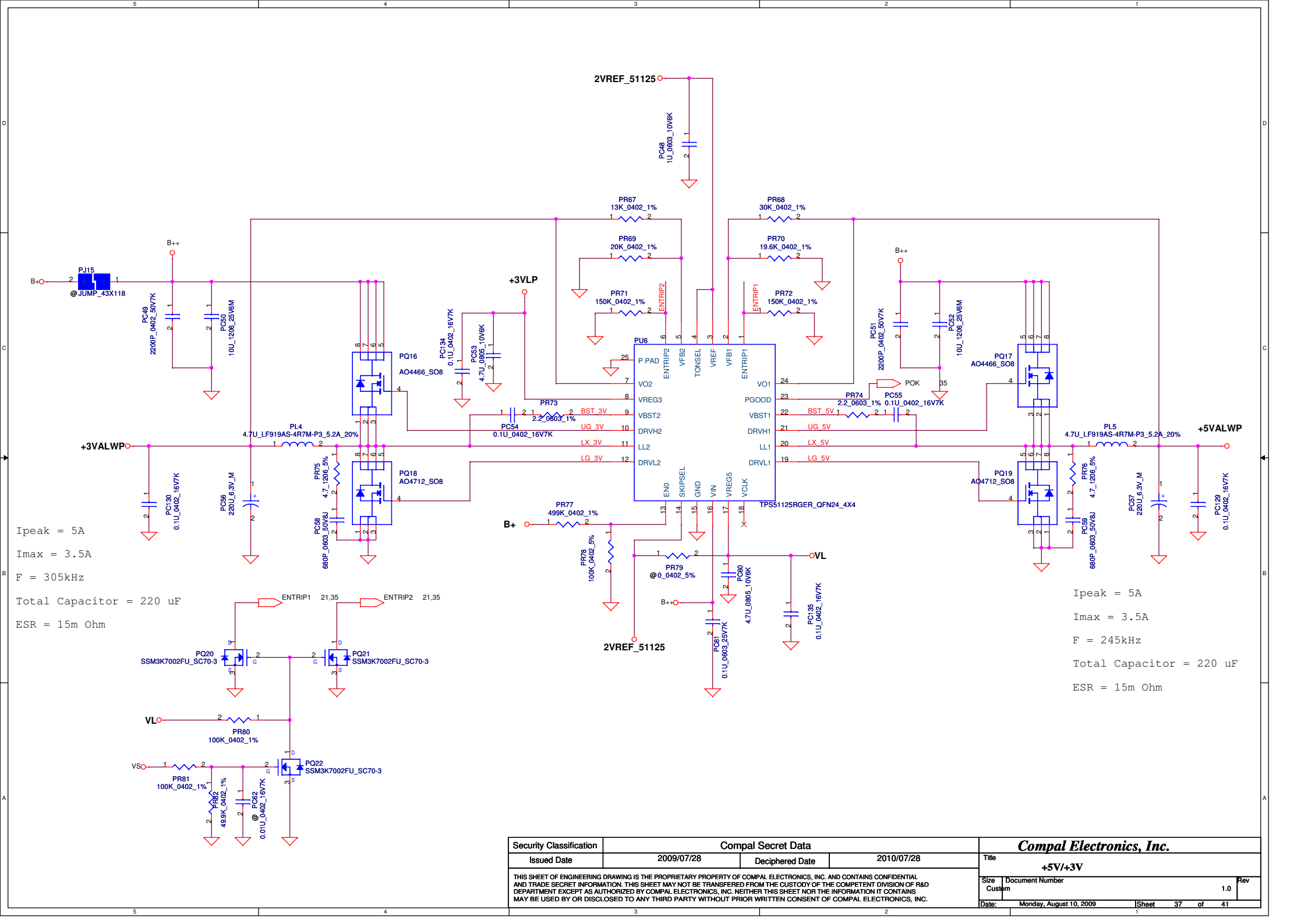

Security Classification	Compal Secret Data		
Issued Date	2009/07/28	Deciphered Date	2010/07/28

THIS SHEET OF ENGINEERING DRAWING IS THE PROPRIETARY PROPERTY OF COMPAL ELECTRONICS, INC. AND CONTAINS CONFIDENTIAL AND TRADE SECRET INFORMATION. THIS SHEET MAY NOT BE TRANSFERED FROM THE CUSTODY OF THE COMPETENT DIVISION OF R&D DEPARTMENT EXCEPT AS AUTHORIZED BY COMPAL ELECTRONICS, INC. NEITHER THIS SHEET NOR THE INFORMATION IT CONTAINS MAY BE USED BY OR DISCLOSED TO ANY THIRD PARTY WITHOUT PRIOR WRITTEN CONSENT OF COMPAL ELECTRONICS, INC.

Compal Electronics, Inc.

Title: +5V/+3V

Size: Custom | Document Number | Rev: 1.0

Date: Monday, August 10, 2009 | Sheet 37 of 41

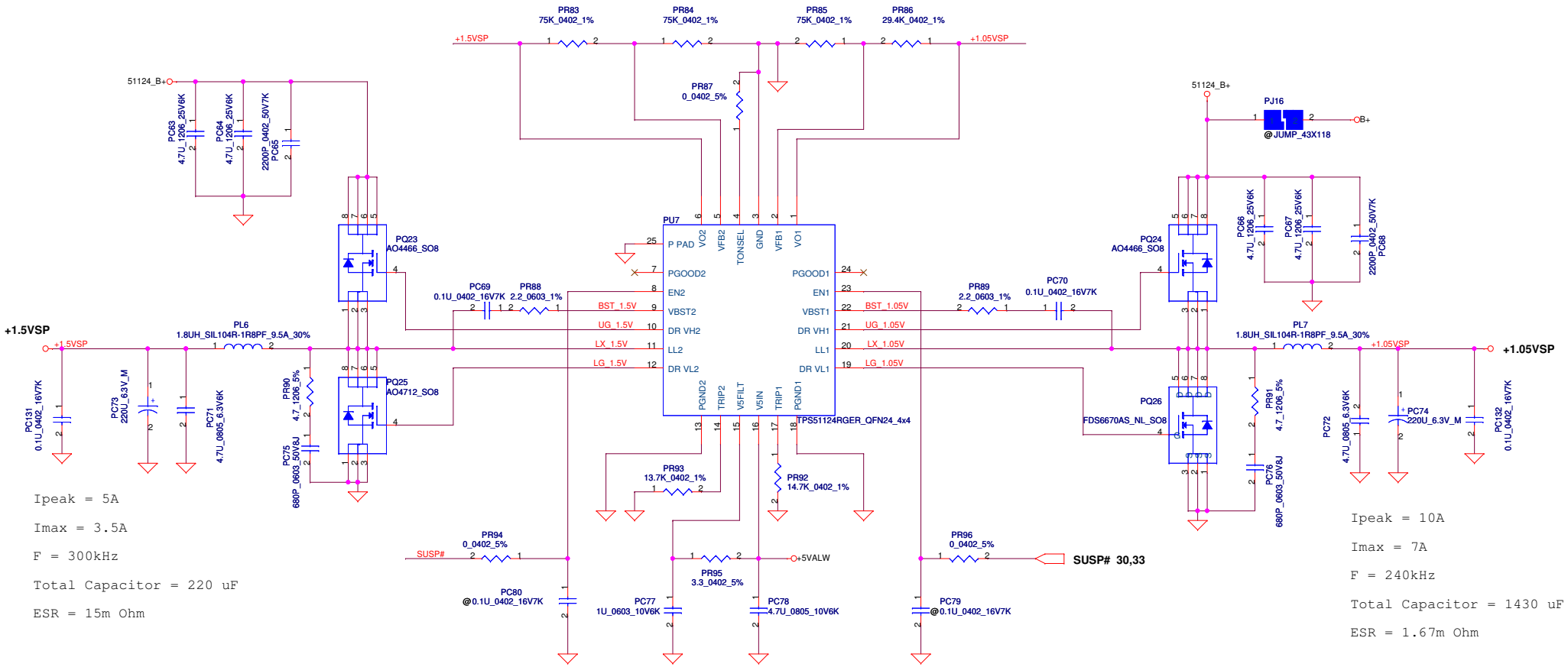

Security Classification	Compal Secret Data		
Issued Date	2009/07/28	Deciphered Date	2010/07/28

THIS SHEET OF ENGINEERING DRAWING IS THE PROPRIETARY PROPERTY OF COMPAL ELECTRONICS, INC. AND CONTAINS CONFIDENTIAL AND TRADE SECRET INFORMATION. THIS SHEET MAY NOT BE TRANSFERED FROM THE CUSTODY OF THE COMPETENT DIVISION OF R&D DEPARTMENT EXCEPT AS AUTHORIZED BY COMPAL ELECTRONICS, INC. NEITHER THIS SHEET NOR THE INFORMATION IT CONTAINS MAY BE USED BY OR DISCLOSED TO ANY THIRD PARTY WITHOUT PRIOR WRITTEN CONSENT OF COMPAL ELECTRONICS, INC.

Compal Electronics, Inc.

Title: 1.05V / 1.5V

Size | Document Number | Rev 1.0

Date: Monday, August 10, 2009 | Sheet 38 of 41

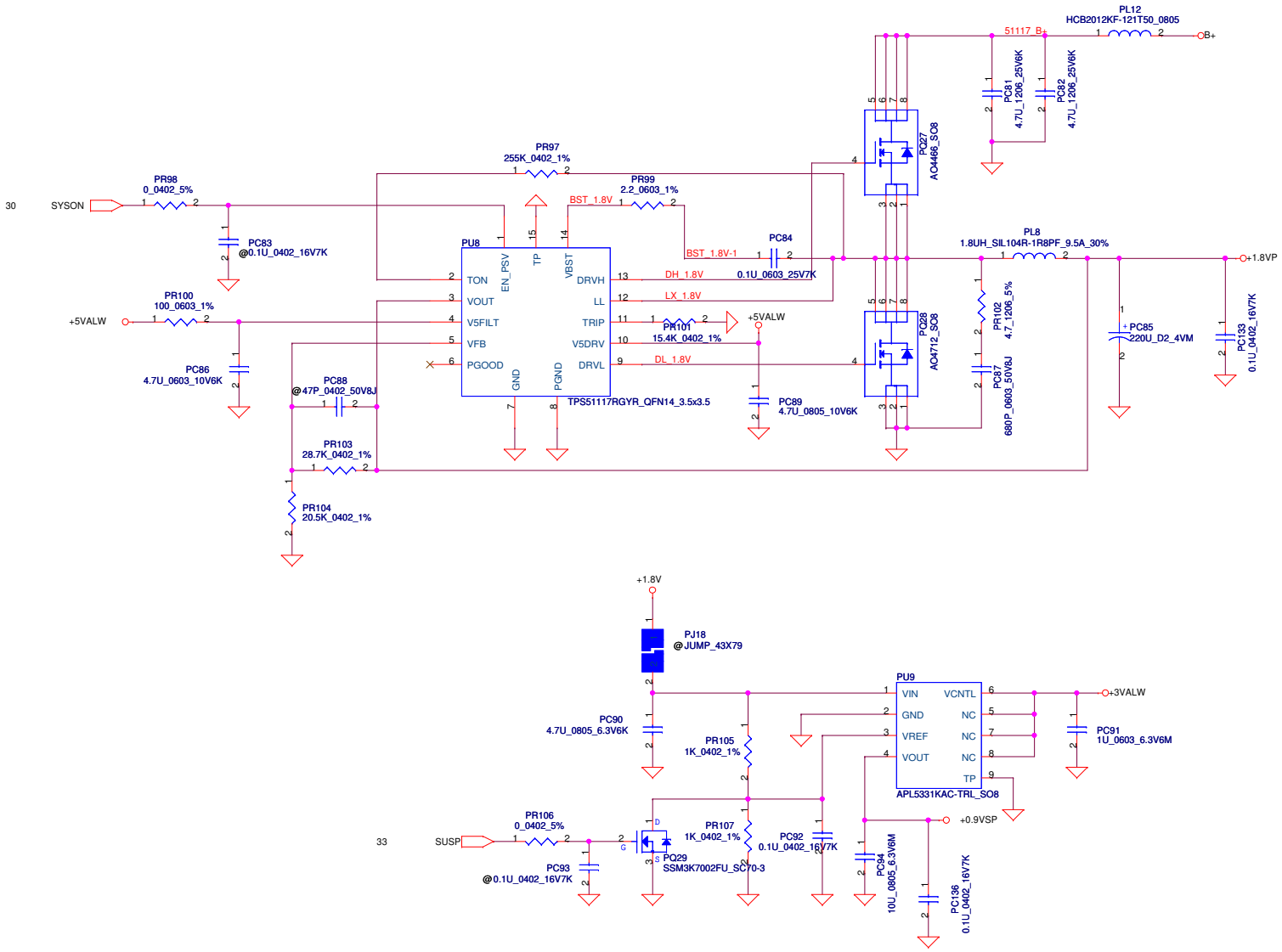

Ipeak = 8A

Imax = 5.6A

F = 312kHz

Total Capacitor = 440 uF

ESR = 7.5m Ohm

Security Classification	Compal Secret Data		
Issued Date	2009/07/28	Deciphered Date	2010/07/28

THIS SHEET OF ENGINEERING DRAWING IS THE PROPRIETARY PROPERTY OF COMPAL ELECTRONICS, INC. AND CONTAINS CONFIDENTIAL AND TRADE SECRET INFORMATION. THIS SHEET MAY NOT BE TRANSFERED FROM THE CUSTODY OF THE COMPETENT DIVISION OF R&D DEPARTMENT EXCEPT AS AUTHORIZED BY COMPAL ELECTRONICS, INC. NEITHER THIS SHEET NOR THE INFORMATION IT CONTAINS MAY BE USED BY OR DISCLOSED TO ANY THIRD PARTY WITHOUT PRIOR WRITTEN CONSENT OF COMPAL ELECTRONICS, INC.

Compal Electronics, Inc.

Title: 1.8V / 0.9V

Size | Document Number | Rev 1.0

Date: Thursday, August 06, 2009 | Sheet 39 of 41

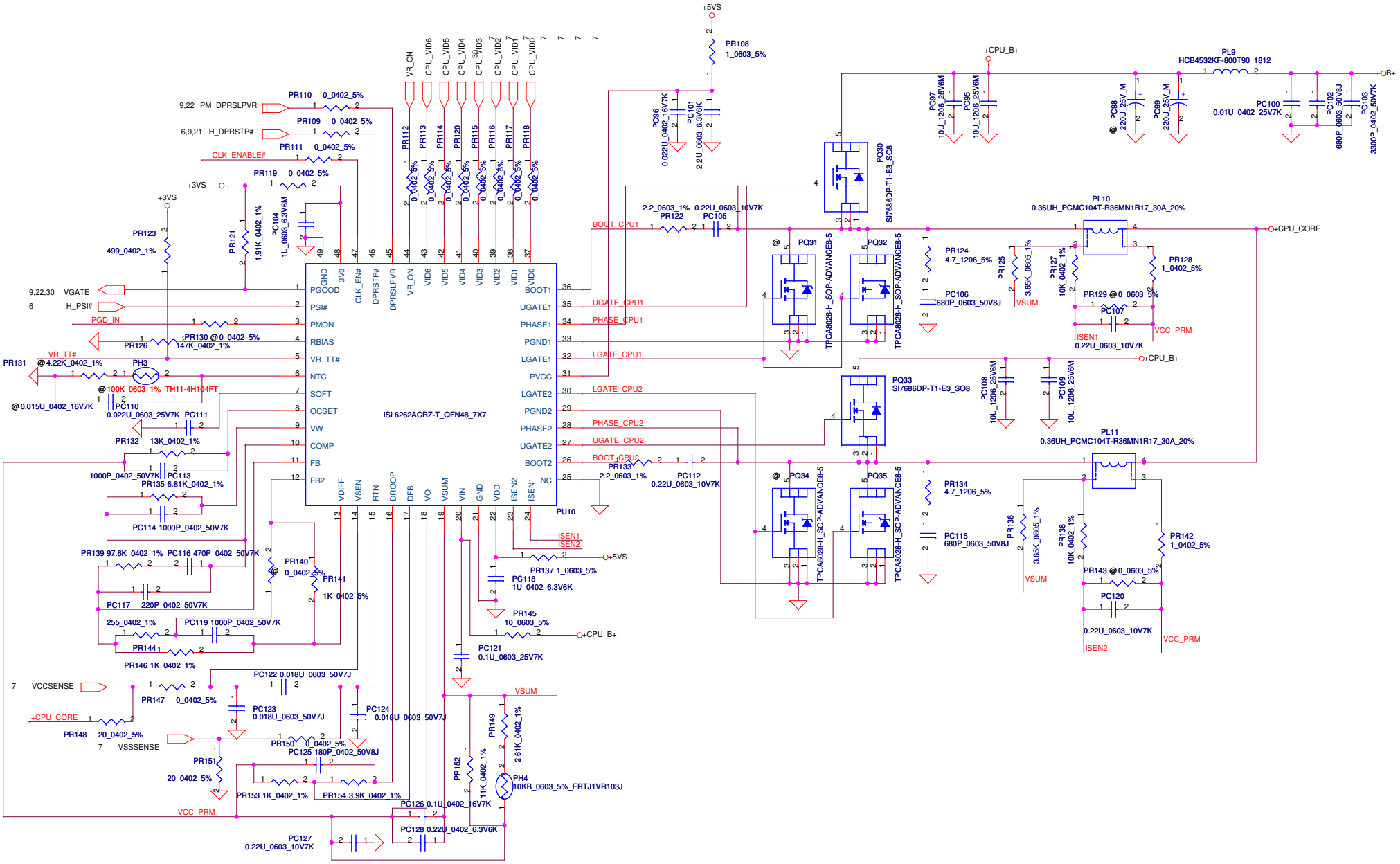

Security Classification	Compal Secret Data		
Issued Date	2009/07/28	Deciphered Date	2010/07/28

THIS SHEET OF ENGINEERING DRAWING IS THE PROPRIETARY PROPERTY OF COMPAL ELECTRONICS, INC. AND CONTAINS CONFIDENTIAL AND TRADE SECRET INFORMATION. THIS SHEET MAY NOT BE TRANSFERED FROM THE CUSTODY OF THE COMPETENT DIVISION OF R&D DEPARTMENT EXCEPT AS AUTHORIZED BY COMPAL ELECTRONICS, INC. NEITHER THIS SHEET NOR THE INFORMATION IT CONTAINS MAY BE USED BY OR DISCLOSED TO ANY THIRD PARTY WITHOUT PRIOR WRITTEN CONSENT OF COMPAL ELECTRONICS, INC.

Compal Electronics, Inc.

Title: +CPU_CORE

Size: Custom | Document Number | Rev: 1.0

Date: Monday, August 10, 2009 | Sheet 40 of 41

PIR (Product Improve Record)

NBWAA LA-5821P SCHEMATIC CHANGE LIST
REVISION CHANGE: 0.1 TO 1.0

NO	DATE	PAGE	MODIFICATION LIST	PURPOSE
1.	08/06	18	Add R936 on BKOFF#; R937 on INVT_PWM	To prevent EC pin damage
2.	08/06	26	Add RL90, RL91, RL91 on +3V_LAN	For EMI's request
3.	08/06	18	Add C922, C923, C924 220pF on DAC_BRIG, INVT_PWM_R, BKOFF#_R	For EMI's request
4.	08/06	31	Delete R752, C787 on SPI_CLK; Add L912, C925 on SPI_CLK_L	For EMI's request
5.	08/06	28	Add LA11 on INT_MIC_L	For EMI's request
6.	08/06	28	Mount D61, DA3, DA6, DA7	For ESD's request
7.	08/06	32	Un-mount SW5, SW6	Power button, no need after pre-MP

Security Classification	Compal Secret Data		
Issued Date	2009/07/28	Deciphered Date	2010/07/28

THIS SHEET OF ENGINEERING DRAWING IS THE PROPRIETARY PROPERTY OF COMPAL ELECTRONICS, INC. AND CONTAINS CONFIDENTIAL AND TRADE SECRET INFORMATION. THIS SHEET MAY NOT BE TRANSFERED FROM THE CUSTODY OF THE COMPETENT DIVISION OF R&D DEPARTMENT EXCEPT AS AUTHORIZED BY COMPAL ELECTRONICS, INC. NEITHER THIS SHEET NOR THE INFORMATION IT CONTAINS MAY BE USED BY OR DISCLOSED TO ANY THIRD PARTY WITHOUT PRIOR WRITTEN CONSENT OF COMPAL ELECTRONICS, INC.

Compal Electronics, Inc.

Title: *ISPD*

Size | Document Number: *NBWAA LA5821P M/B* | Rev 1.0

Date: Monday, August 10, 2009 | Sheet 41 of 41