915 C0 TO C4 TO C0 Timings

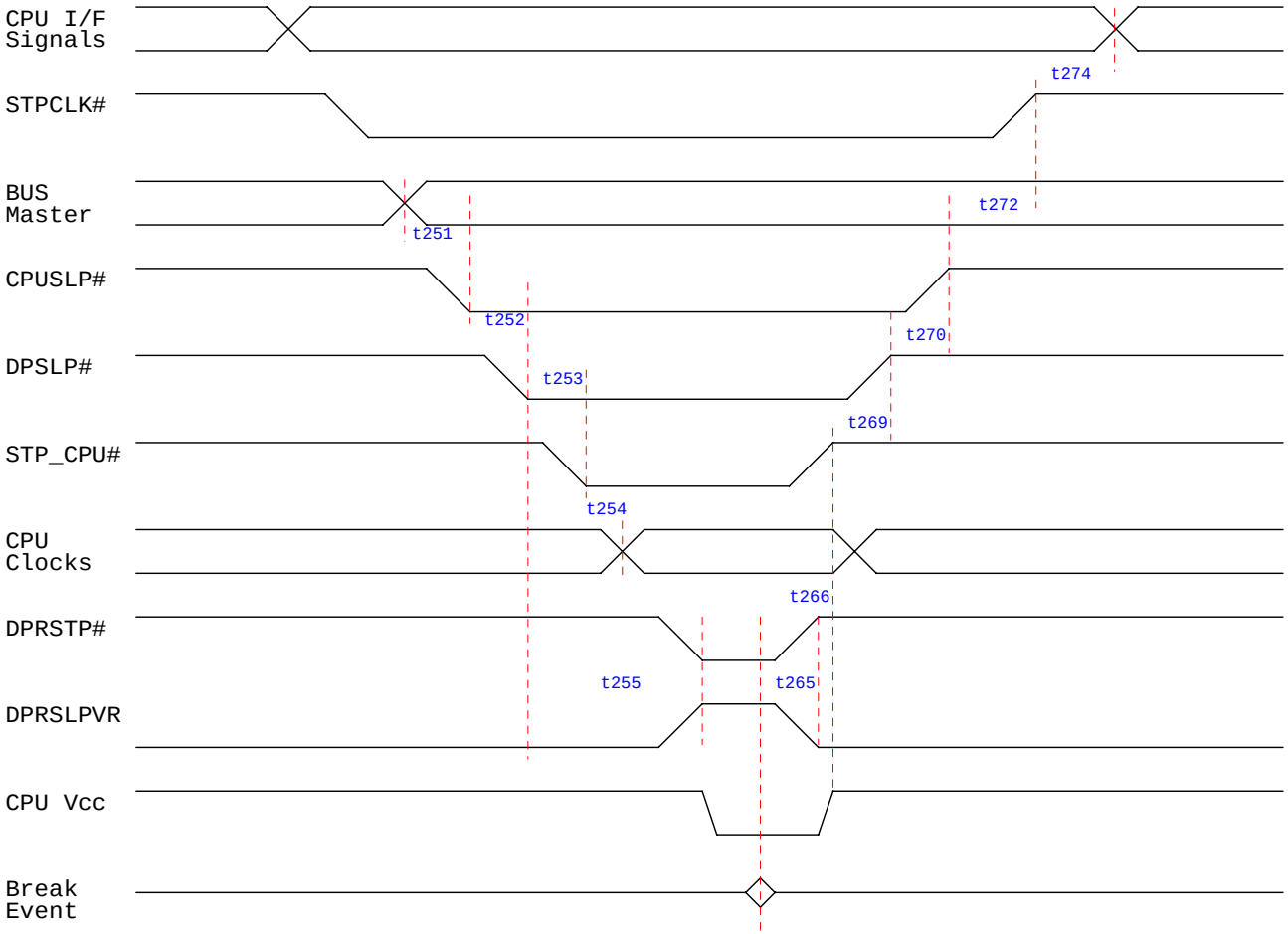

	min	max	Units
t251	2.88		PCICLK
t252	16		PCICLK
t253	1	1	PCICLK
t254	0	-	PCICLK
t255	0	-	
t265	1.5	1.8	us
t266			
t269	1	1	PCICLK
t270			
t272	0		
t274	8	9	PCICLK

MODEL:	REV:	CHANGE LIST:	ECN NO
CH1 MotherBoard	2A	FIRST RELEASE	E200506-4922 E200507-0708

MODEL : CH1 MB

PAGE	FROM	TO
1	2A	
2	2A	
3	2A	
4	2A	
5	2A	
6	2A	
7	2A	
8	2A	
9	2A	
10	2A	
11	2A	
12	2A	
13	2A	
14	2A	
15	2A	
16	2A	
17	2A	
18	2A	
19	2A	
20	2A	
21	2A	
22	2A	
23	2A	
24	2A	
25	2A	
26	2A	
27	2A	
28	2A	
29	2A	
30	2A	

Quanta Computer Inc.

PROJECT : CH1	APPROVE BY: JIM HSU	DRAWING BY:JACKY CHENG	REV 2A
MB ASSY'S P/N : 31CH1MB0031	PROJECT LEADER: JIM HSU	DOCUMENT NO: 204	DATE :2005/07/07

COVER SHEET 1 OF 1

CH1 Block Diagram

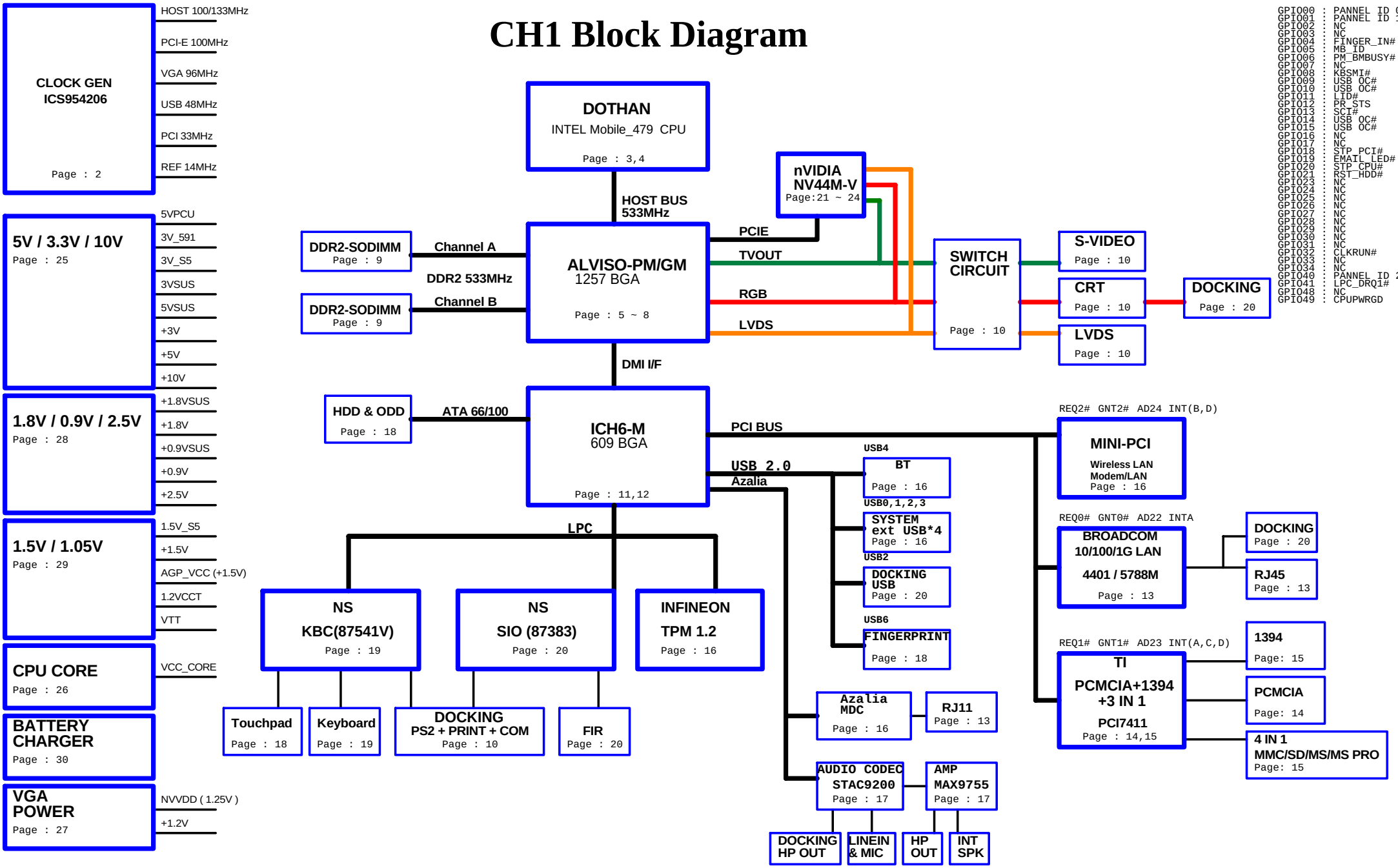

ICH6 GPIO DEFINE

GPIO00	:	PANNEL ID 0
GPIO01	:	PANNEL ID 1
GPIO02	:	NC
GPIO03	:	NC
GPIO04	:	FINGER_IN#
GPIO05	:	MB_ID
GPIO06	:	PM_BMBUSY#
GPIO07	:	NC
GPIO08	:	KBSMI#
GPIO09	:	USB OC#
GPIO10	:	USB OC#
GPIO11	:	LID#
GPIO12	:	PR_STS
GPIO13	:	SCI#
GPIO14	:	USB OC#
GPIO15	:	USB OC#
GPIO16	:	NC
GPIO17	:	NC
GPIO18	:	STP_PCI#
GPIO19	:	EMAIL LED#
GPIO20	:	STP_CPU#
GPIO21	:	RST_HDD#
GPIO23	:	NC
GPIO24	:	NC
GPIO25	:	NC
GPIO26	:	NC
GPIO27	:	NC
GPIO28	:	NC
GPIO29	:	NC
GPIO30	:	NC
GPIO31	:	NC
GPIO32	:	CLKRUN#
GPIO33	:	NC
GPIO34	:	NC
GPIO40	:	PANNEL ID 2
GPIO41	:	LPC_DRQ1#
GPIO48	:	NC
GPIO49	:	CPUPWRGD

PCI ROUTING TABLE	IDSEL	INTERRUPT	DEVICE
REQ0# / GNT0#	AD22	INTA#	BROADCOM LAN
REQ2# / GNT2#	AD24	INTB# , INTD#	MINI-PCI
REQ1# / GNT1#	AD23	INTC#,INTD#,INTA#	TI 7411

PROJECT : CH1
Quanta Computer Inc.

Size	Document Number	Rev
	BLOCK DIAGRAM	2A

Date: Friday, July 08, 2005 Sheet 1 of 30

CLOCK GENERNATOR

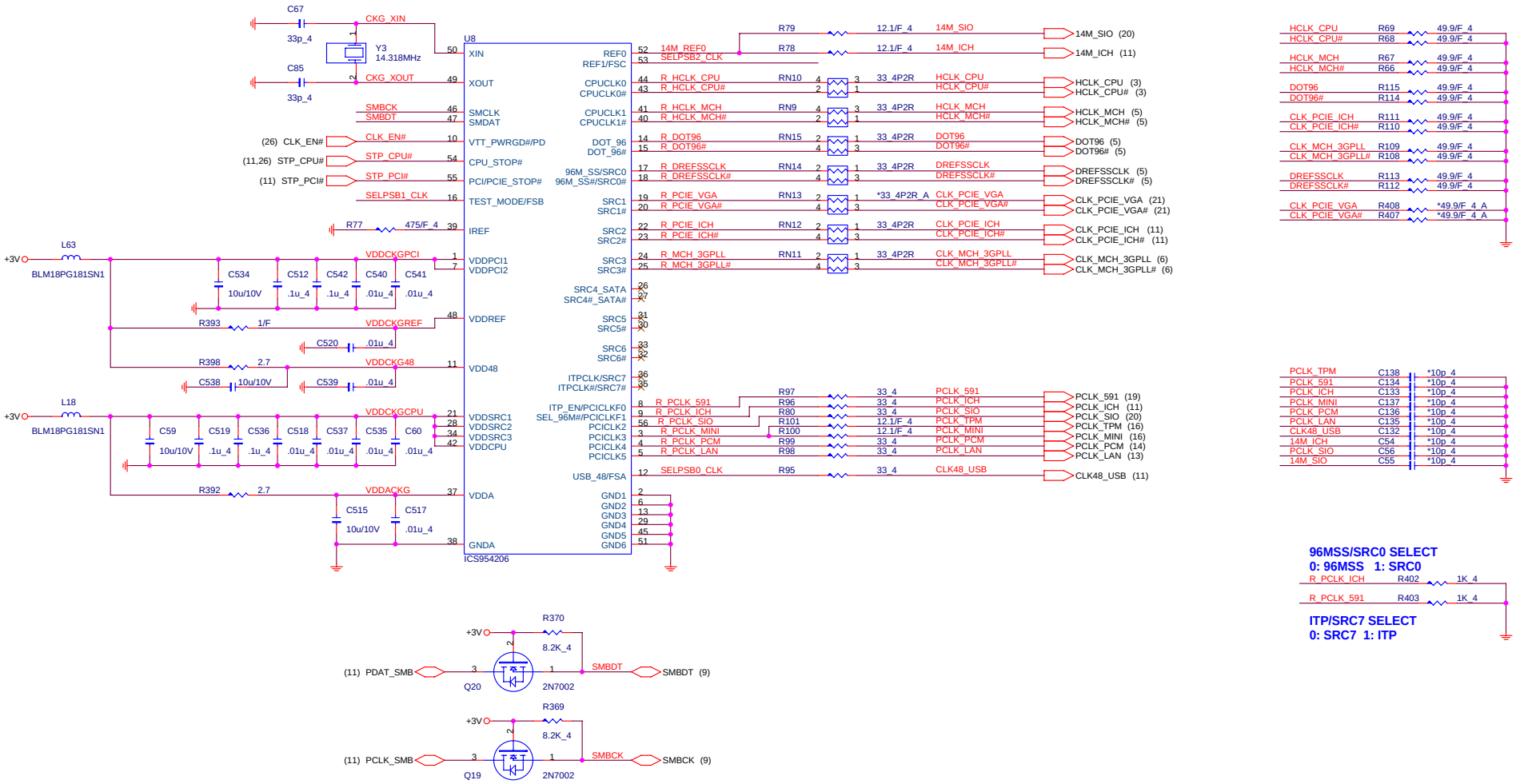

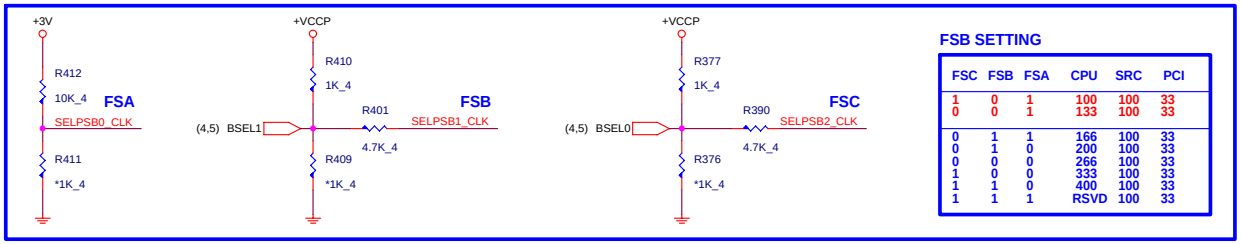

FSB SETTING

FSC	FSB	FSA	CPU	SRC	PCI
1	0	1	100	100	33
0	0	1	133	100	33
0	1	1	166	100	33
0	1	0	200	100	33
0	0	0	266	100	33
1	0	0	333	100	33
1	1	0	400	100	33
1	1	1	RSVD	100	33

PROJECT : CH1
Quanta Computer Inc.

Size	Document Number	Rev
	CLOCK GENERATOR	2A

Date: Friday, July 08, 2005 Sheet 2 of 30

CPU

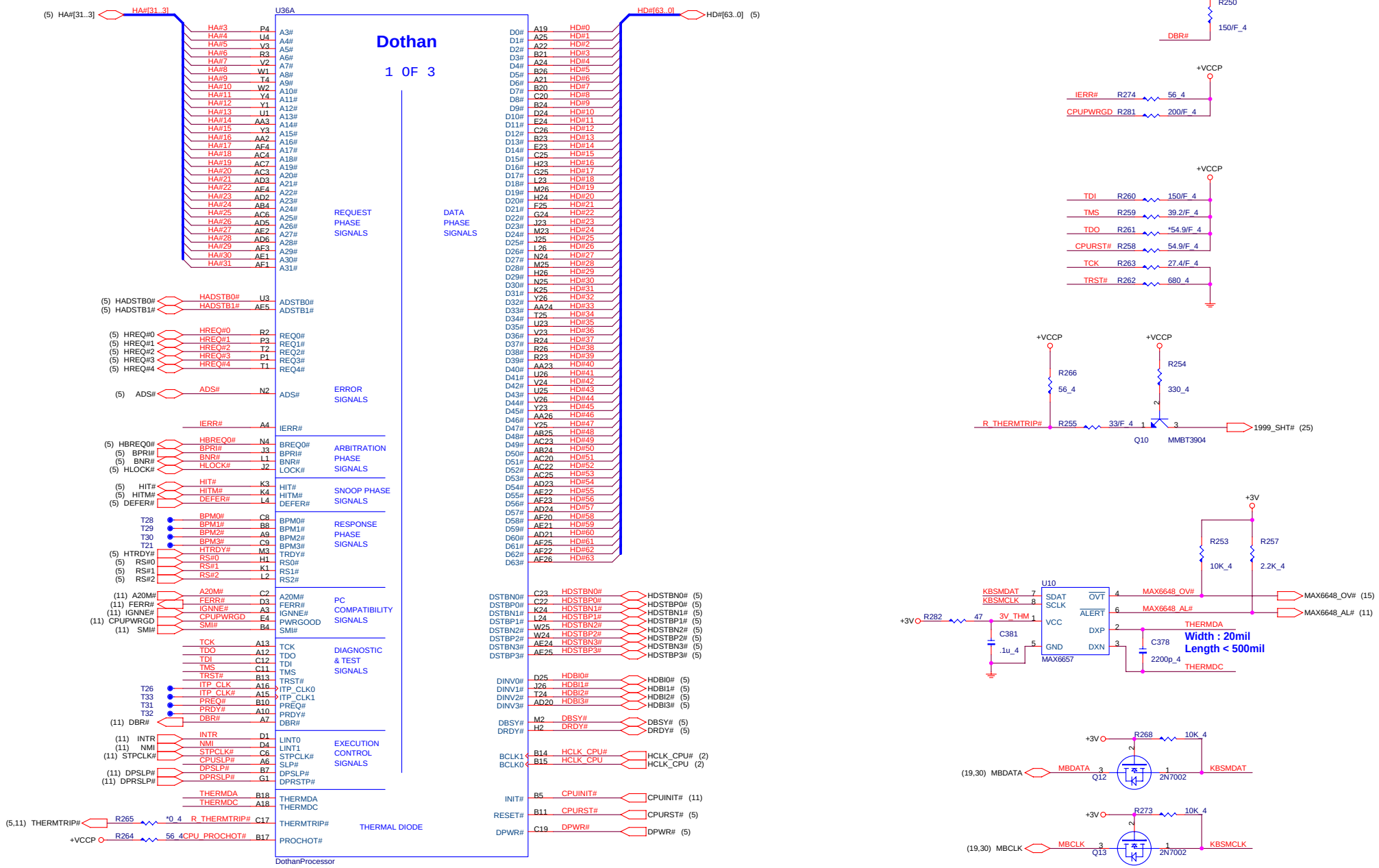

PROJECT : CH1
Quanta Computer Inc.

Size	Document Number	Rev
	CPU (HOST BUS)	2A

Date: Friday, July 08, 2005 Sheet 3 of 30

CPU

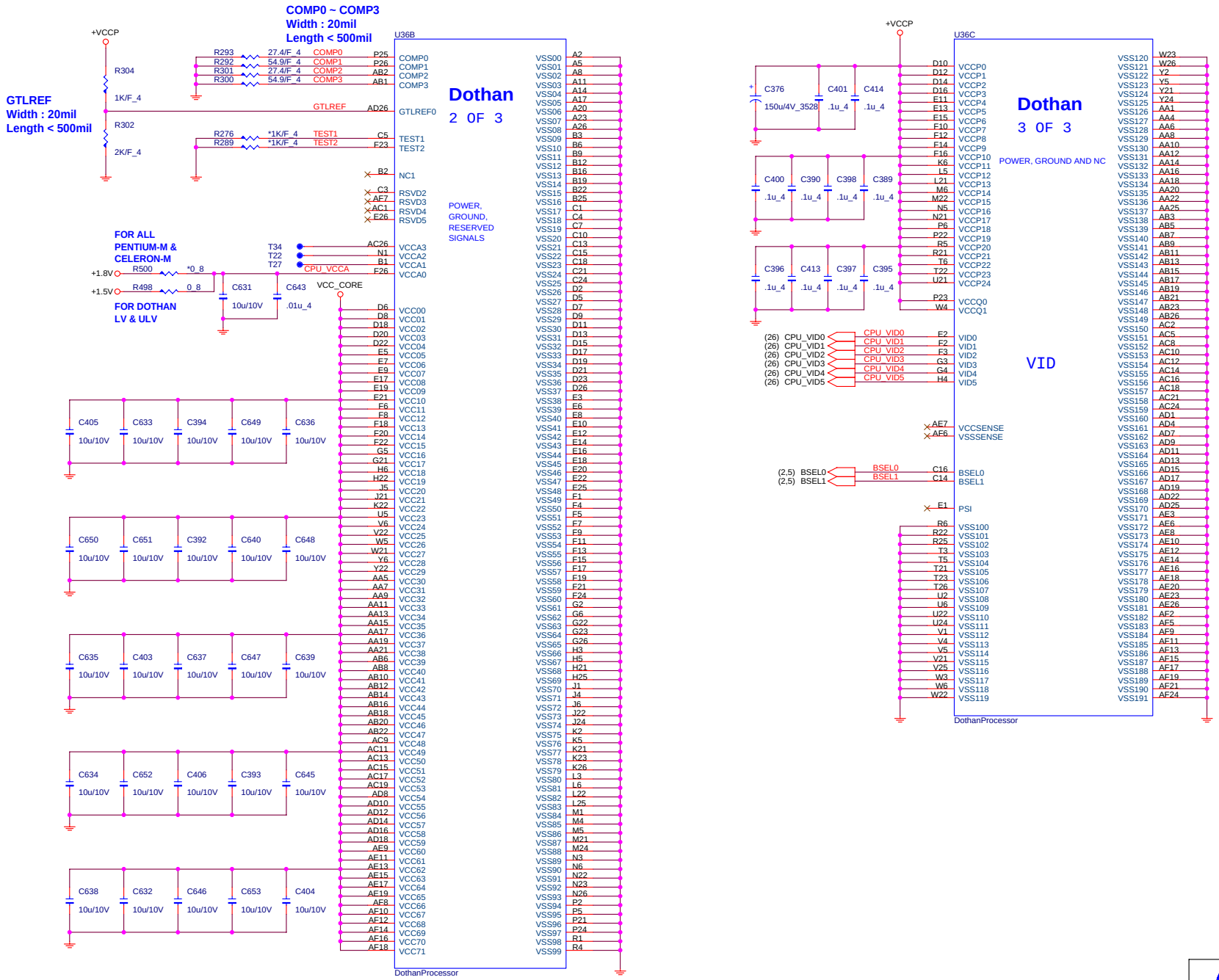

PROJECT : CH1
Quanta Computer Inc.

Size	Document Number	Rev
	CPU (POWER)	2A

Date: Friday, July 08, 2005 Sheet 4 of 30

GMCH

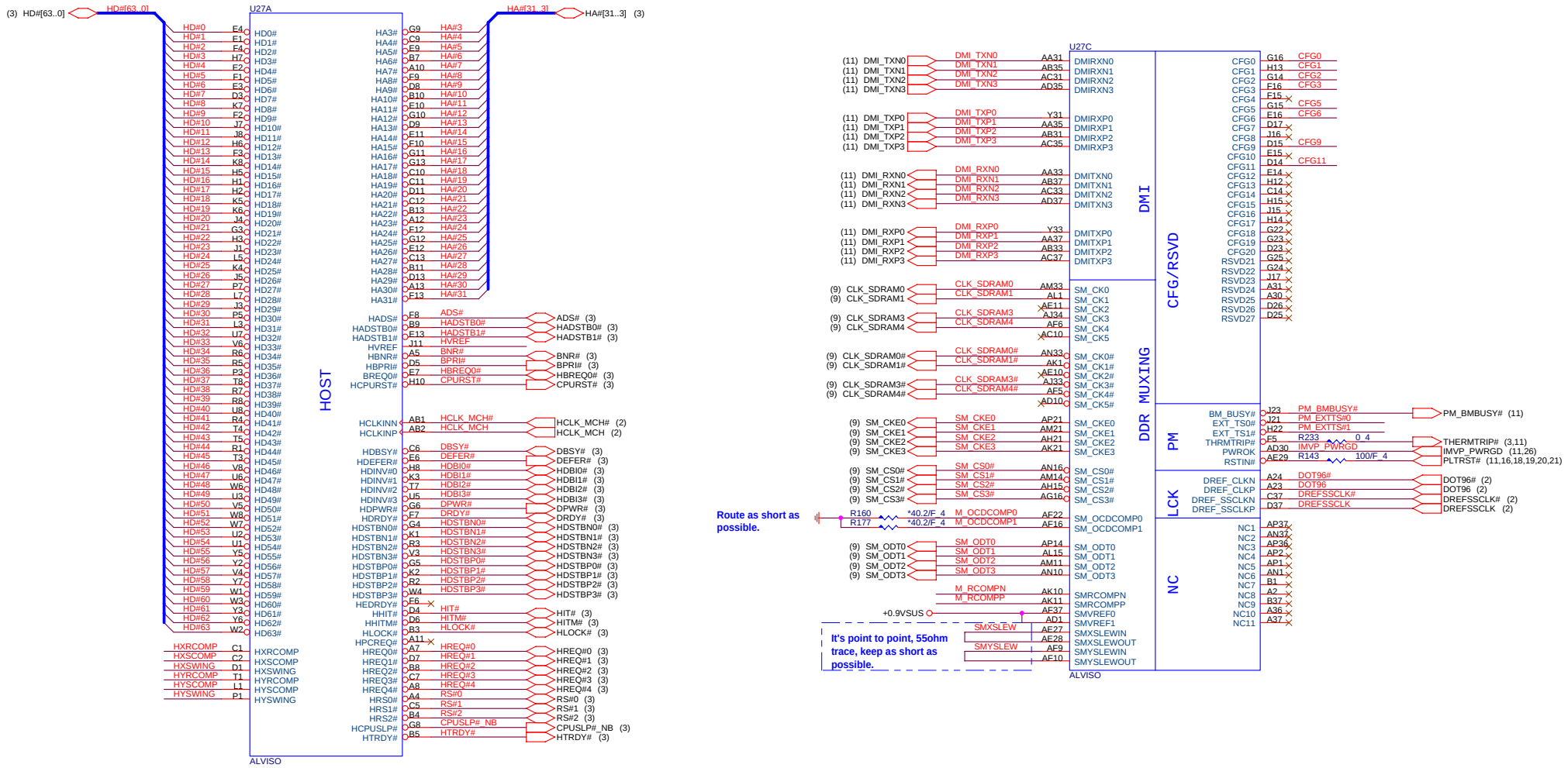

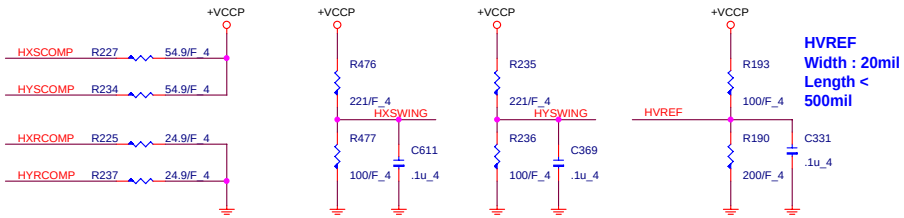

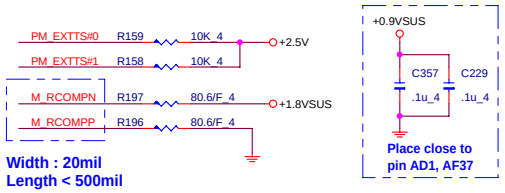

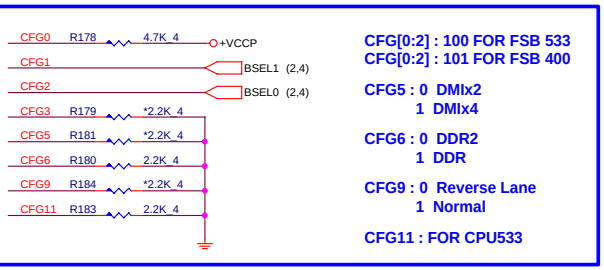

PROJECT : CH1
Quanta Computer Inc.

Size	Document Number	Rev
	GMCH (HOST/DMI)	2A

Date: Friday, July 08, 2005 Sheet 5 of 30

GMCH

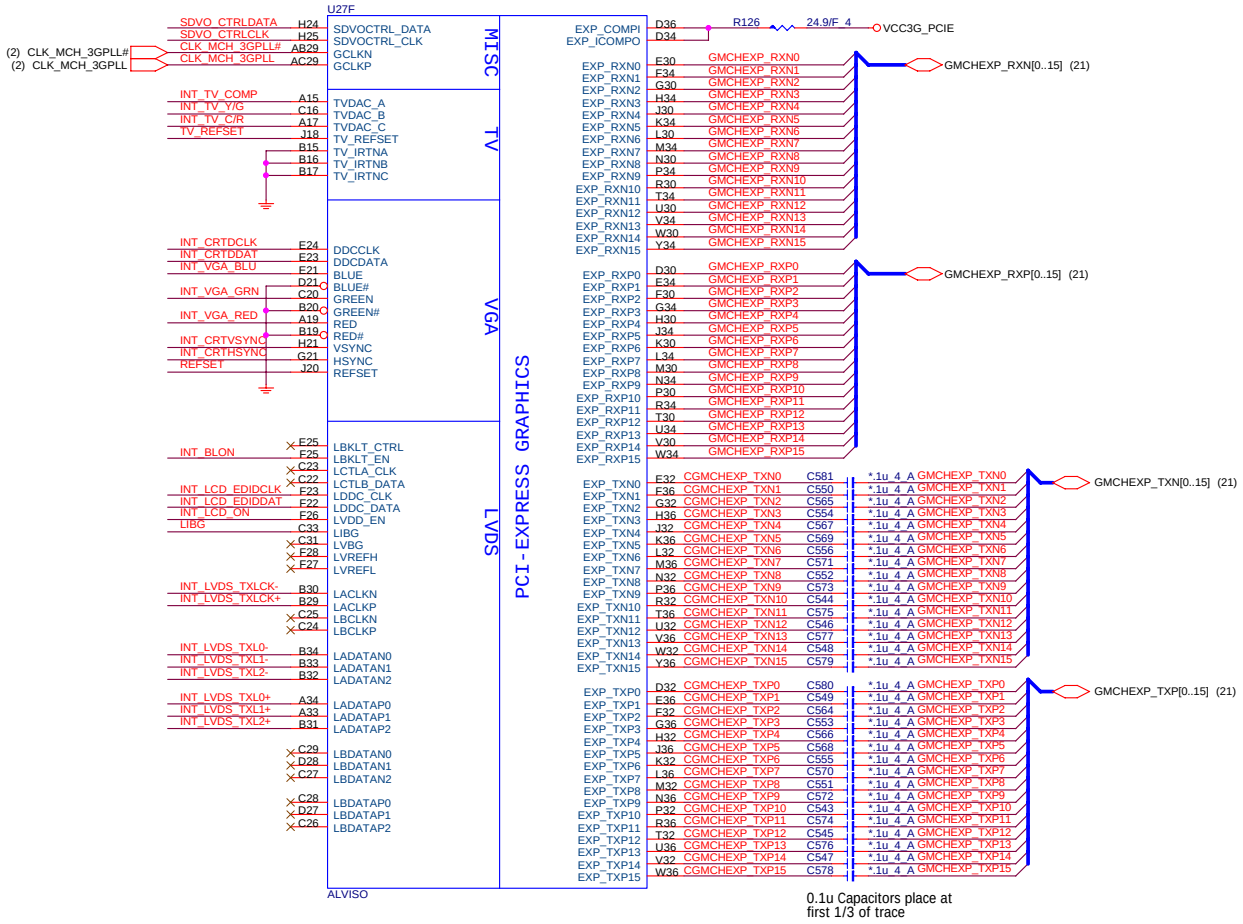

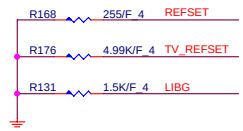

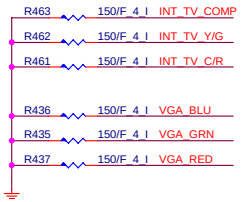

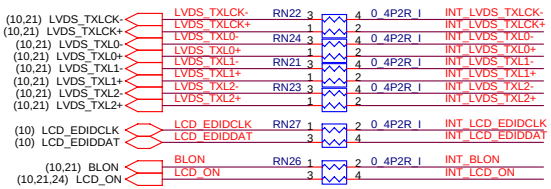

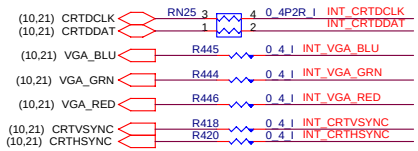

PROJECT : CH1
Quanta Computer Inc.

Size	Document Number	Rev
	GMCH (VGA)	2A

Date: Friday, July 08, 2005 Sheet 6 of 30

GMCH

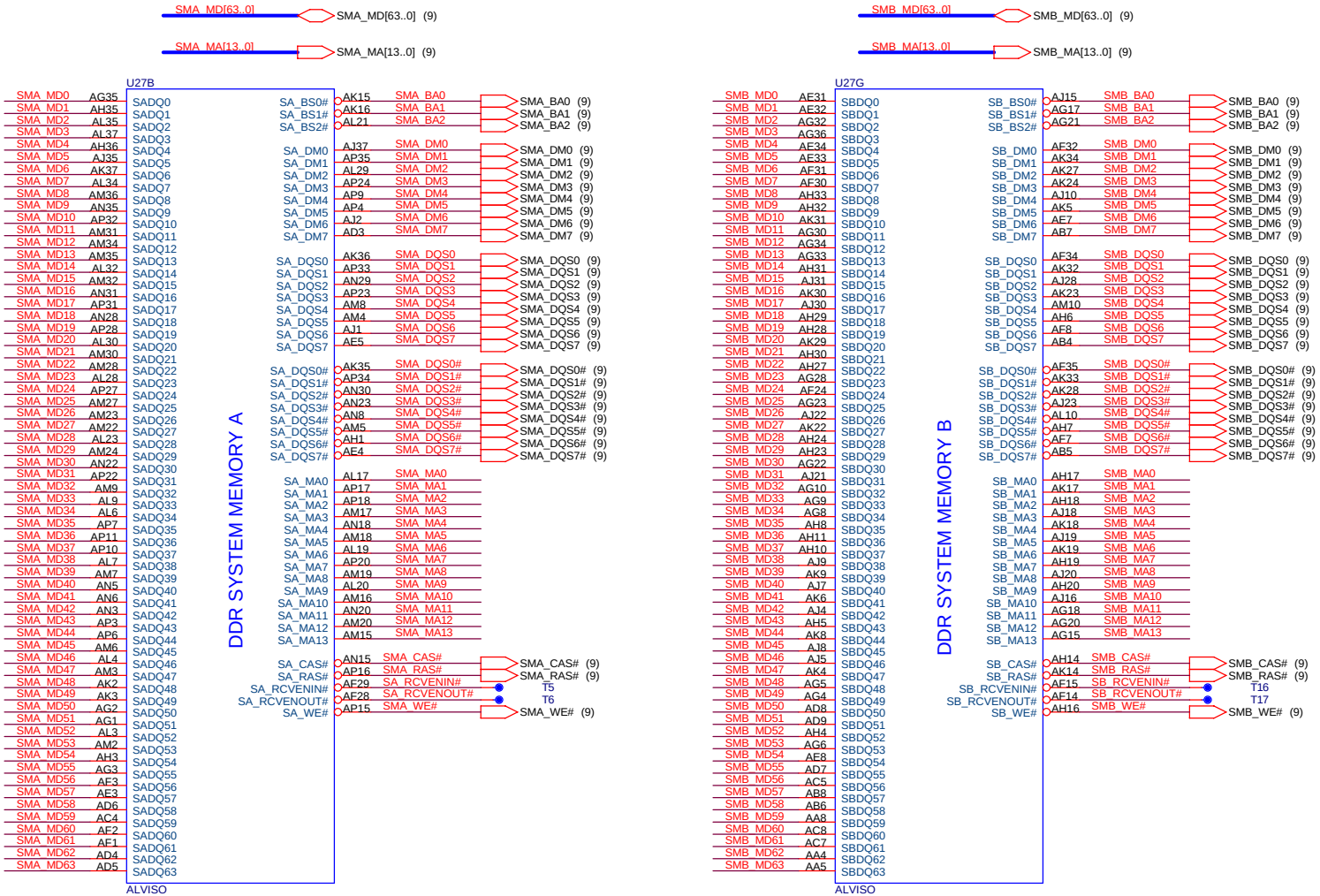

PROJECT : CH1

Quanta Computer Inc.

Size	Document Number	Rev
	GMCH (MEMORY)	2A

Date: Friday, July 08, 2005 Sheet 7 of 30

GMCH

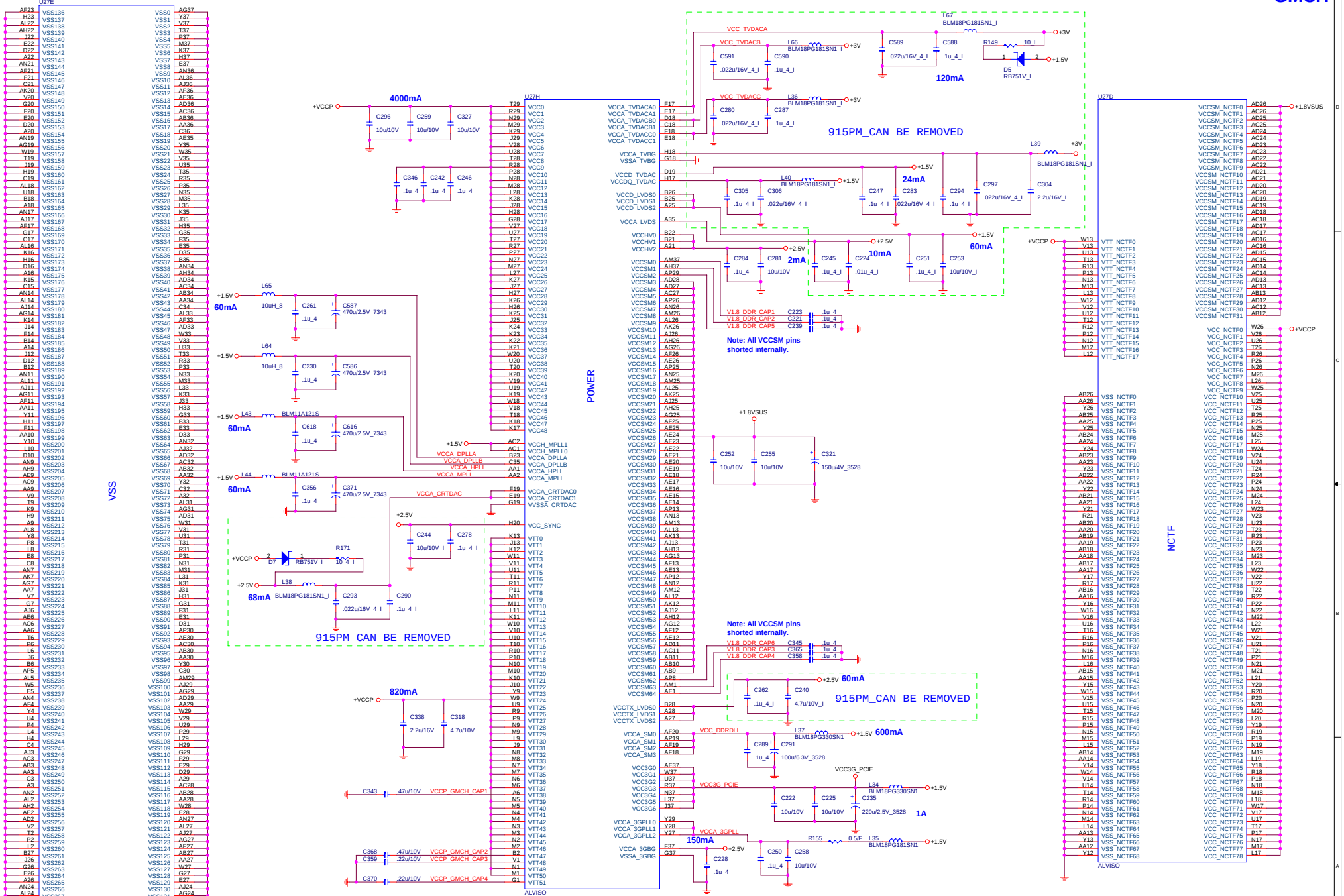

PROJECT : CH1

Quanta Computer Inc.

Size	Document Number	Rev
	GMCH (POWER)	2A

Date: Friday, July 08, 2005 Sheet 8 of 30

DDR2 SO-DIMM SOCKET

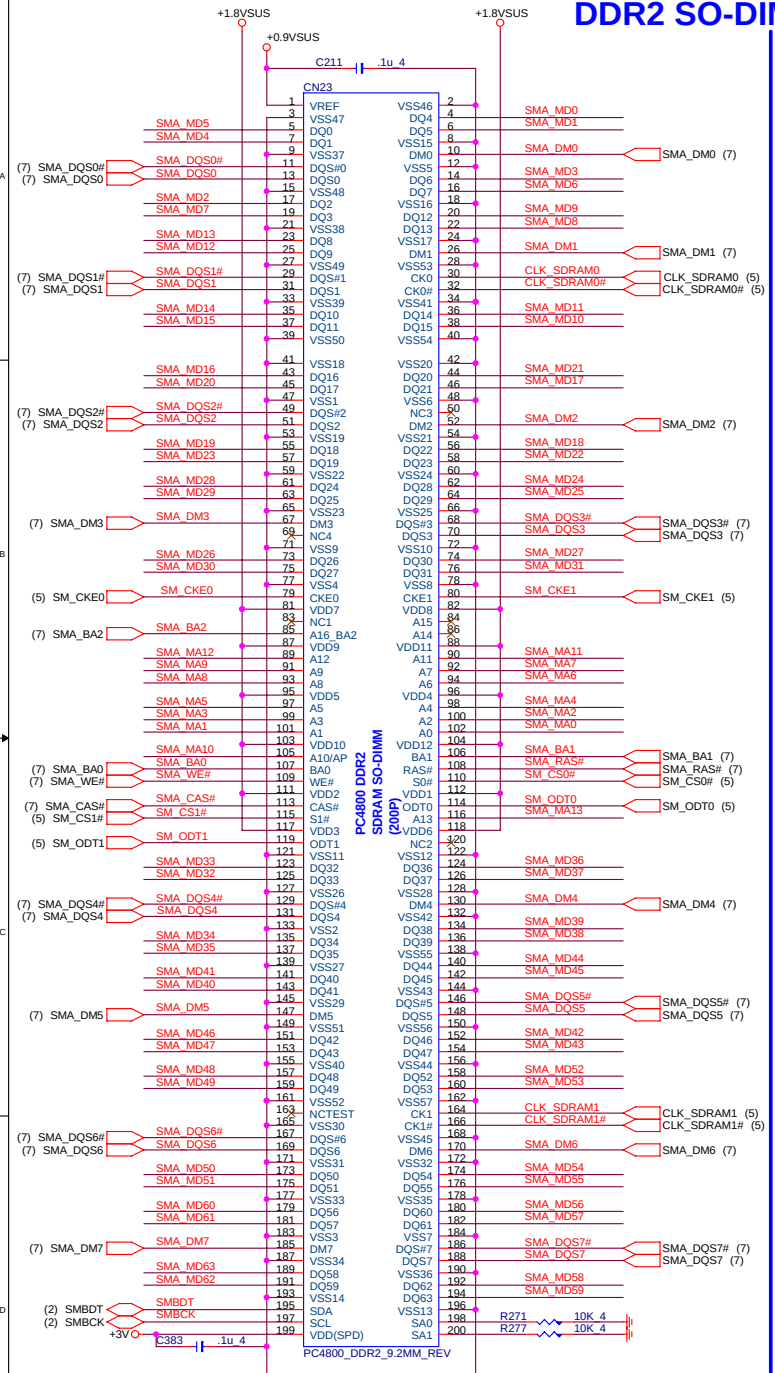

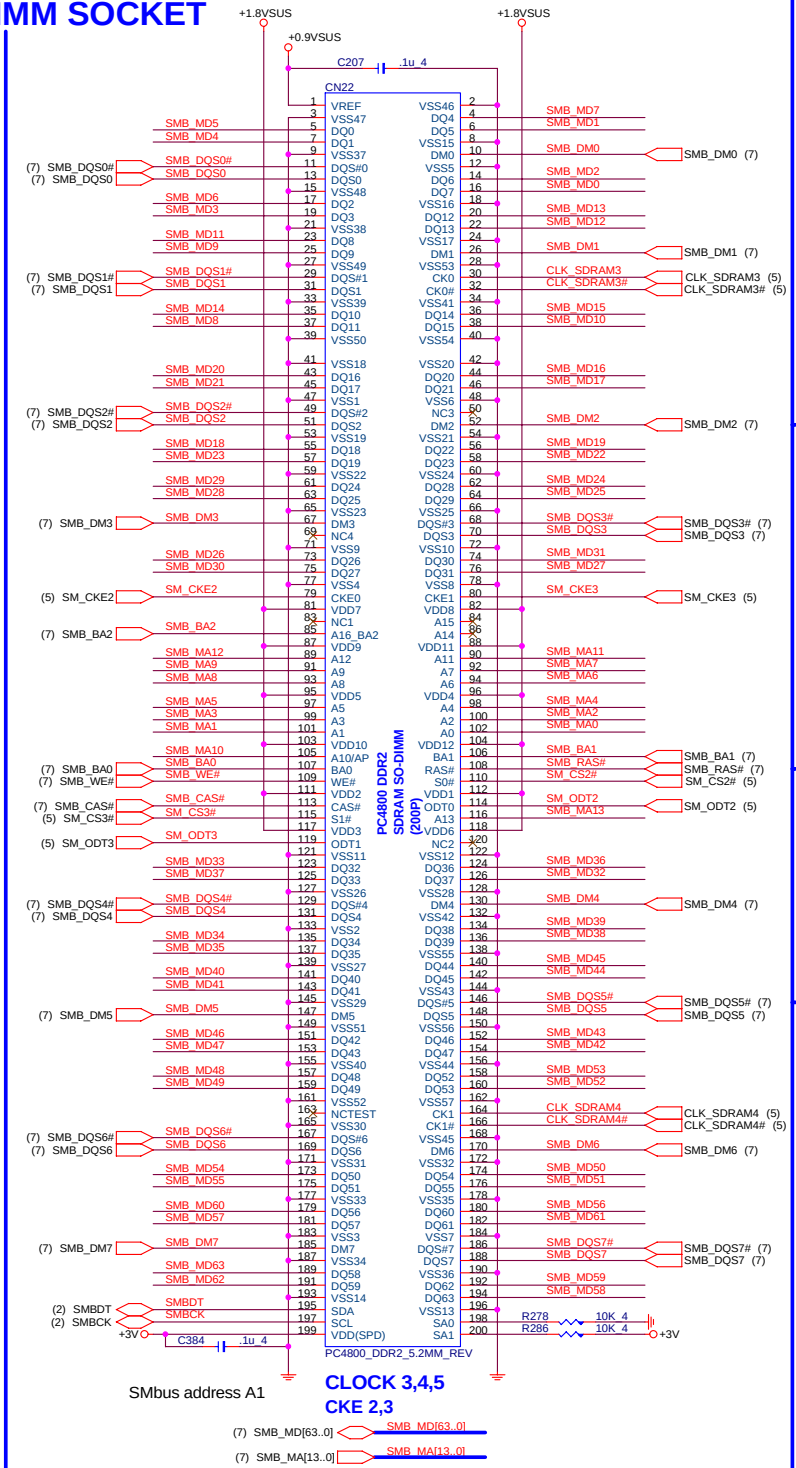

DDR2 TERMINATOR

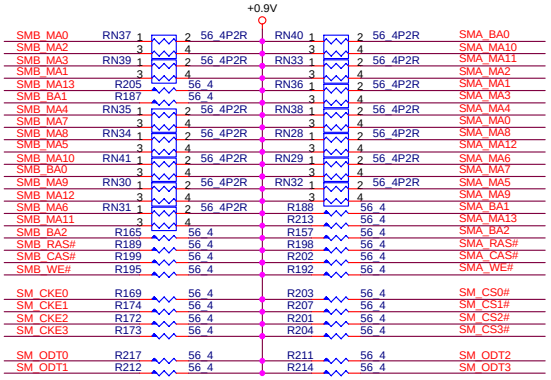

TERMINATOR DECOUPLING CAPACITOR

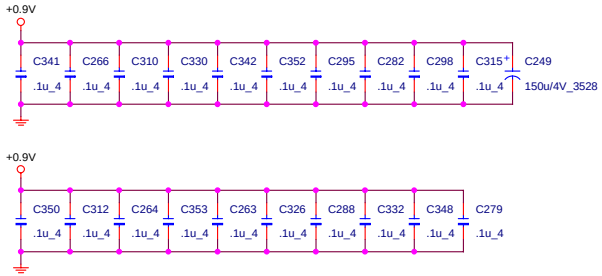

CLOSE SO-DIMM SOCKET CAPACITORS

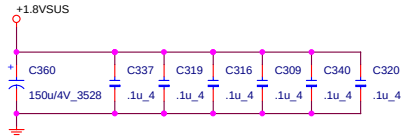

CLOSE SO-DIMM SOCKET CAPACITORS

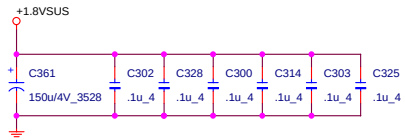

PROJECT : CH1
Quanta Computer Inc.

Size	Document Number	Rev
	DDR2 SO-DIMM & TERMINATOR	2A

Date: Friday, July 08, 2005 Sheet 9 of 30

LVDS

PANEL ID SETTING

PNL_ID[2:0]	PANEL TYPE
000	AU B121EW01
001	CMO N121I1-L02
010	TOSHIBA LTD121EX1S
011 ~ 110	RESERVED
111	NO PANEL

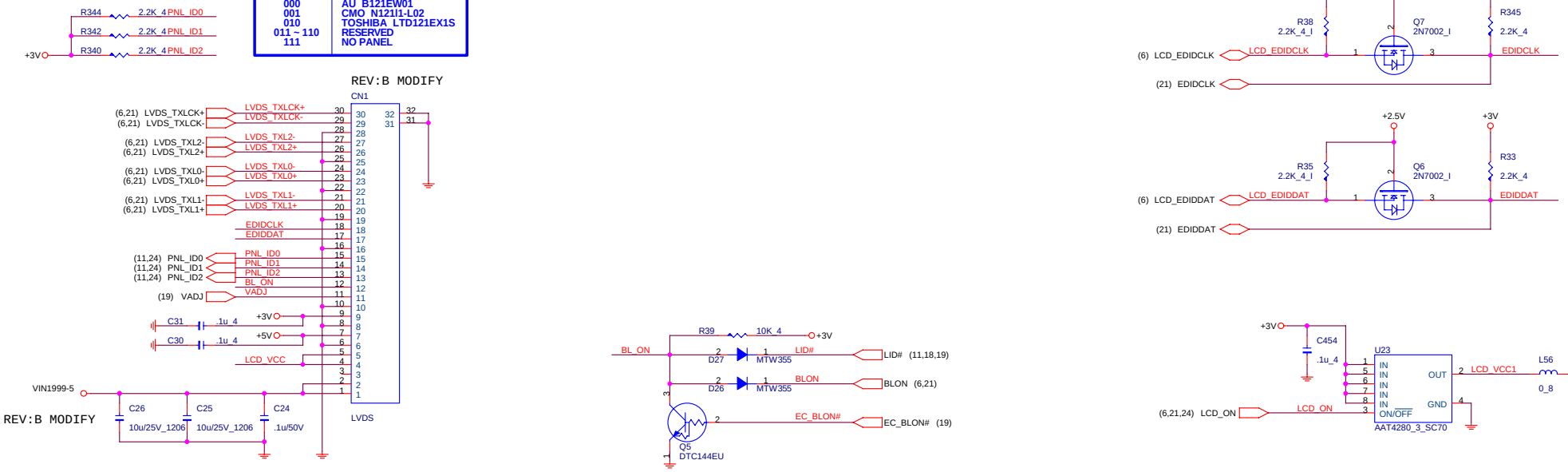

CRT

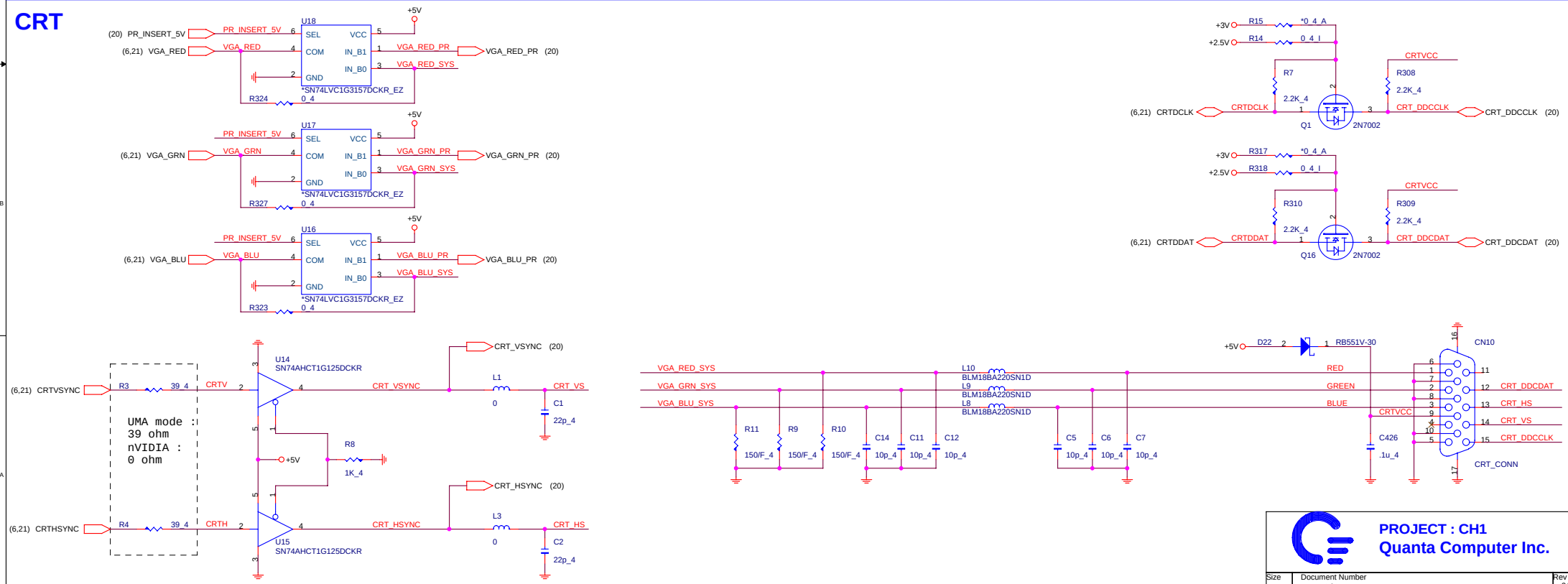

PROJECT : CH1
Quanta Computer Inc.

Size	Document Number	Rev
	LVDS/CRT	2A

Date: Friday, July 08, 2005 Sheet 10 of 30

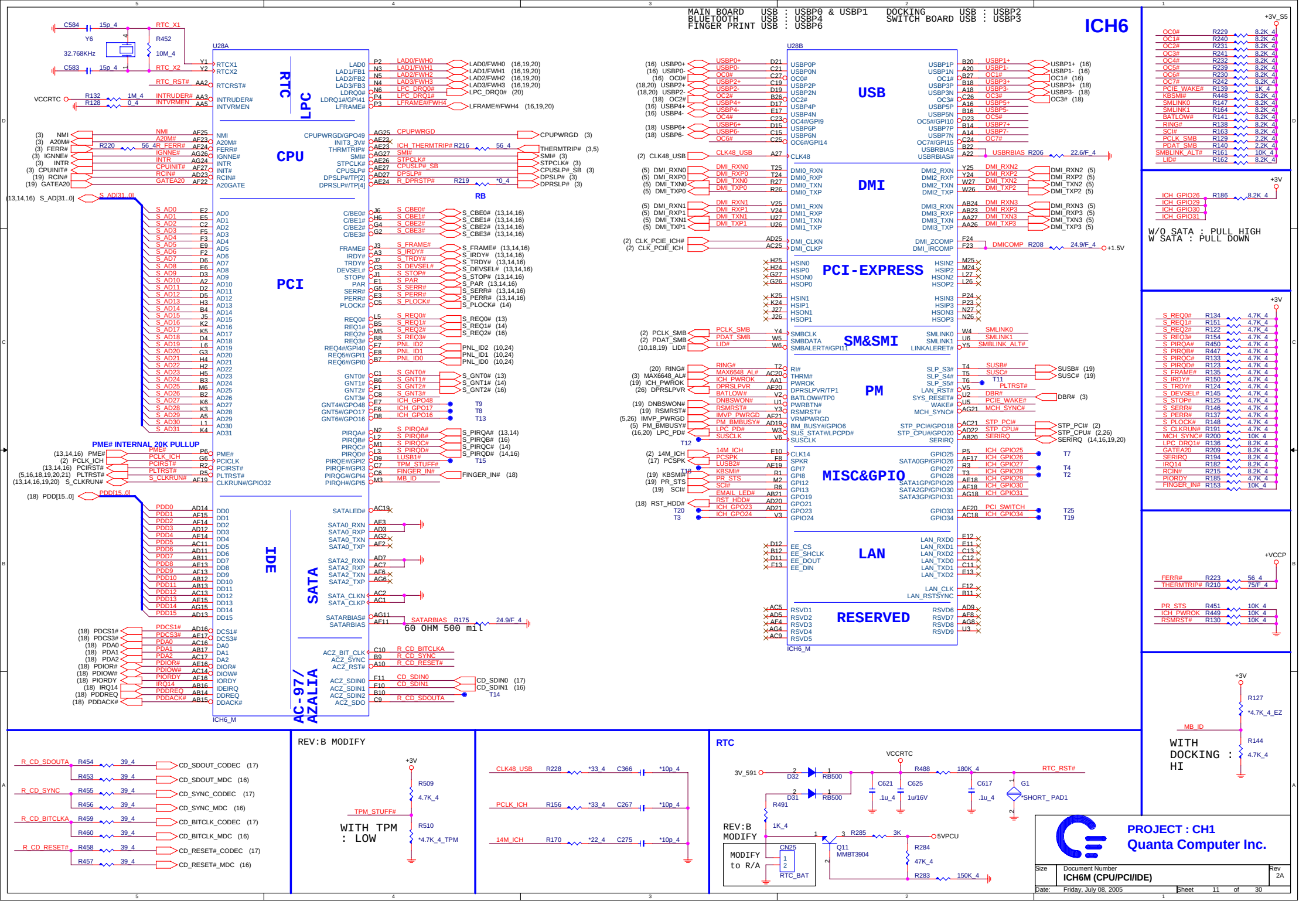
ICH6
MAIN BOARD USB : USBP0 & USBP1
BLUETOOTH USB : USBP4
FINGER PRINT USB : USBP6
DOCKING USB : USBP2
SWITCH BOARD USB : USBP3
U28A
U28B
RTC
LPC
CPU
PCI
RB
IDE
SATA
AC-97/ AZALIA
USB
DMI
PCI-EXPRESS
SM&SMI
PM
MISC&GPIO
LAN
RESERVED
ICH6_M
PME# INTERNAL 20K PULLUP
W/O SATA : PULL HIGH
W SATA : PULL DOWN
WITH DOCKING : HI
WITH TPM : LOW
REV:B MODIFY
MODIFY to R/A
RTC
PROJECT : CH1
Quanta Computer Inc.
ICH6M (CPU/PCI/IDE)
Friday, July 08, 2005

ICH6

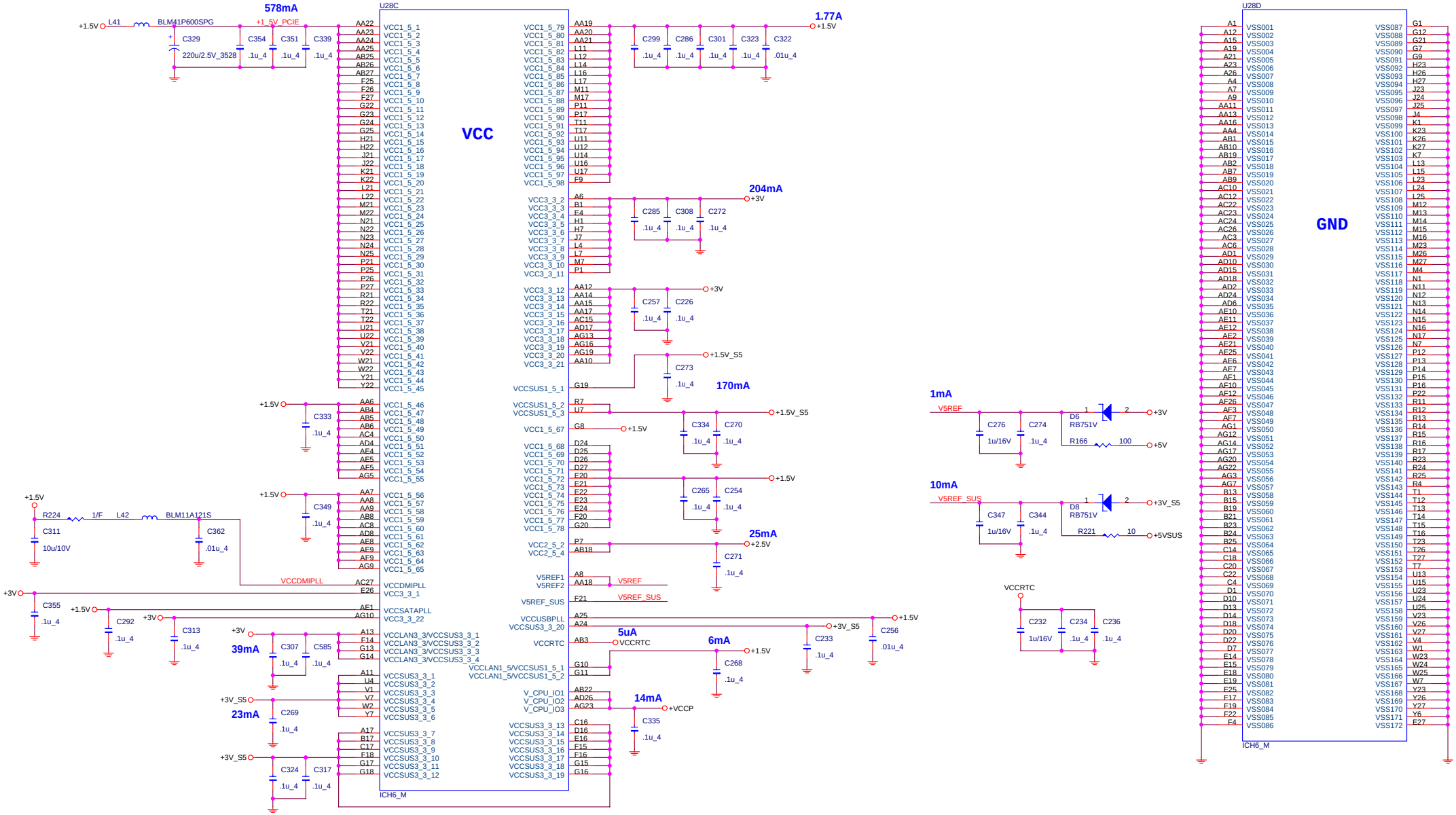

PROJECT : CH1
Quanta Computer Inc.

Size	Document Number	Rev
	ICH6M (POWER)	2A

Date: Friday, July 08, 2005 Sheet 12 of 30

ETHERNET

REQ0# AD22
GNT0# PIRQA#
S_AD22 R353 150/F_4 LAN_IDSEL

FOR 4401 +3V_S5 R349 0_8
FOR 5788 +3V R350 *0_8

PCLK_LAN R354 *22_4 C478 *10p_4

LAN_3V +1.8V_1.2V_LAN

C481 4.7u/10V, C486 .1u_4, C504 .1u_4, C503 .01u_4, C496 .01u_4
C495 4.7u/10V, C501 .1u_4, C498 .1u_4, C479 .1u_4, C491 .1u_4, C505 .01u_4, C493 .01u_4, C494 .01u_4, C497 .01u_4

+3V_2.5V_LAN: C507 4.7u/10V, C482 .1u_4, C472 .1u_4, C506 .01u_4

+3V_S5: C473 .1u_4, C477 .1u_4, C499 .01u_4, C502 .01u_4

U3 BCM4401KFBG

(11,14,16) S_AD[31..0] — S_AD[31..0]

S_AD0 N7 AD0
S_AD1 M7 AD1
S_AD2 P6 AD2
S_AD3 P5 AD3
S_AD4 N5 AD4
S_AD5 M5 AD5
S_AD6 P4 AD6
S_AD7 N4 AD7
S_AD8 P3 AD8
S_AD9 N3 AD9
S_AD10 N2 AD10
S_AD11 M1 AD11
S_AD12 M2 AD12
S_AD13 M3 AD13
S_AD14 L1 AD14
S_AD15 L2 AD15
S_AD16 K1 AD16
S_AD17 E3 AD17
S_AD18 D1 AD18
S_AD19 D2 AD19
S_AD20 D3 AD20
S_AD21 C1 AD21
S_AD22 B1 AD22
S_AD23 B2 AD23
S_AD24 B4 AD24
S_AD25 A5 AD25
S_AD26 B5 AD26
S_AD27 B6 AD27
S_AD28 C6 AD28
S_AD29 C7 AD29
S_AD30 A8 AD30
S_AD31 B8 AD31

(11,14,16) S_CBE0# M4 CBE_0#
(11,14,16) S_CBE1# L3 CBE_1#
(11,14,16) S_CBE2# F3 CBE_2#
(11,14,16) S_CBE3# C4 CBE_3#

+3V_S5 R360 4.7K_4 J12 VAUXPRSNT
(11) S_REQ0# C3 REQ#
(11) S_GNT0# J3 GNT#
(11,14,16) S_FRAME# F2 FRAME#
(11,14,16) S_IRDY# F1 IRDY#
(11,14,16) S_DEVSEL# H3 DEVSEL#
(11,14,16) S_STOP# H1 STOP#
(11,14,16) S_TRDY# G3 TRDY#
(11,14,16) S_PAR J1 PAR
(11,14,16) S_PERR# J2 PERR#
(11,14,16) S_SERR# A2 SERR#
(11,14) S_PIRQA# H2 INTA#
(11,14,16) PCIRST# C2 PCI_RST#
(2) PCLK_LAN A3 PCI_CLK
LAN_IDSEL A4 IDSEL
(19) LAN_PME# A6 PME#
(11,14,16) PME# R355 0_4

R356 *10K_4 C8 CSTSCHG
(11,14,16,19,20) S_CLKRUN# R359 *0_4 H4 CLKRUN#
R351 2.7K_4 BCM_SMCLK A10 SMB_CLK
+3V_S5 R352 2.7K_4 BCM_SMDATA C9 SMB_DATA
R361 *0_4 M11 LOW_PWR
4401 NON-STUFF
F4 M66EN

C52 27p_4 +3V_2.5V_LAN J14 XTALVDD
LAN_XI N11 XTALI
LAN_XO N10 XTALO
Y2 25MHz
C49 27p_4 R62 200_4

+1.8V_1.2V_LAN L62 BLM18PG330SN1 LAN_PLLVDD2 P7 NC/PLLVDD3
C488 4.7u/10V C487 .1u_4 H14 PLLVDD2
L8 NC
M9 NC
N8 NC

15mm x 15mm
BGA196

BIASVDD A14 BIASVDD L59 BLM21PG220SN1D +3V_2.5V_LAN
VDDIO A11 +3V_S5 C476 1000p_4
VDDIO F11
VDDIO K12
VDDIO L12

VESD1 P1 +3V_S5
VESD2 G2
VESD3 A1

NC/VDDP K14 +3V_2.5V_LAN
NC/VDDP L13
VDDP P11
NC/AVDD A13 L60 BLM21PG220SN1D
NC/AVDD F14 C484 .1u_4

EPHY_AVDD/AVDDL F12 L61 BLM21PG220SN1D +1.8V_1.2V_LAN
EPHY_AVDD/AVDDL F13 C485 .1u_4

C42 *.1u_4, C41 *.1u_4, C38 .1u_4, C36 .1u_4

R52 *49.9/F_4, R54 *49.9/F_4, R50 *49.9/F_4, R51 *49.9/F_4, R43 49.9/F_4, R49 49.9/F_4, R41 49.9/F_4, R42 49.9/F_4

NC/TRD[3]- F14 TX3N
NC/TRD[3]+ E13 TX3P
NC/TRD[2]- D14 TX2N
NC/TRD[2]+ D13 TX2P
RDN/TRD[1]- C14 TX1N
RDP/TRD[1]+ C13 TX1P
TDN/TRD[0]- B14 TX0N
TDP/TRD[0]+ B13 TX0P

LINK_LED10#/LINKLEDB G13 LAN_LILED# R53 0_4 LAN_LINKLED#
LINK_LED100#/SPD100LEDB H13 LAN_100LED# R56 0_4
COL_LED#/SPD1000LEDB G12 LAN_1000LED# R55 0_4
ACT_LED#/TRAFFICLEDB G14 LAN_ACTLED#

RDAC D10 LAN_RDAC R357 1.18K/F_4

GPIO0 H12
GPIO1 K13 EEWP# R368 1K_4 +3V_S5
GPIO2 J13

SPROM_CLK/EECLK M10 EECLK R367 *1K_4
SPROM_CS/EEDATA P10 EEDATA R366 *1K_4
4401 NON-STUFF

SPROMDOUT/NC N9 BCM_DI
SPROMDIN/NC P9 BCM_DO

5788 : AJ057880T13
IC(196P) BCM5788MKFBG (FPBGA) L-F

4401 : AJ044010T23
IC(196P) BCM4401KFBG-P20(FPBGA) L-F

TRST# D11 BCM_TRST# R358 1K_4
TDI D12
TCK C12
TMS A12
TDO B12

REGIN33/REGSUP25 B11 — 40mils — C475 4.7u/10V, C480 .1u_4, C490 .01u_4 — +3V_S5
NC/REGCTL25 C11 — Q18 *BCP69T1
OUT33/REGSEN25 C10 — Q17 *BCP69T1 — 4401 NON-STUFF
NC/REGSUP12 B9 — 40mils — 2.5V@88mA 0.564W — C474 4.7u/10V, C483 .1u_4, C43 .01u_4 — +3V_2.5V_LAN
NC/REGCTL12 B10
REGOUT18/REGSEN12 A9 — 40mils — 1.2V@618mA 0.803W — C489 4.7u/10V, C500 .1u_4, C492 .01u_4 — +1.8V_1.2V_LAN

1.5" AWAY FROM CHIP
Use Philips BCP69-16, hfe=75~275
4401 NON-STUFF

NC L7
NC K11
NC K4
NC J11
NC J4
NC J10
NC M8
NC L14
VSS/NC L11
VSS/NC

NC/CS# H11
EECLK_PXE/SCLK G11
EEDATA_PXE/SI E10
NC/SO G11

U4 *24C128/256
EEDATA 5 SDA, EECLK 6 SCL, EEWP# 7 WP, GND 4, A0 1, A1 2, A2 3, VCC 8 — +3V_S5
4401 NON-STUFF

+3V_S5 C48 .1u_4

U24 93LC46
EEDATA 1 CS, EECLK 2 SK, BCM_DI 3 DI, BCM_DO 4 DO, VCC 8, NC 7, NC 6, GND 5 — +3V_S5

TX3P RN44 3 *0_4P2R_EZ 4 TX3P_PR — TX3P_PR (20)
TX3N 1 2 TX3N_PR — TX3N_PR (20)
TX2P RN45 3 *0_4P2R_EZ 4 TX2P_PR — TX2P_PR (20)
TX2N 1 2 TX2N_PR — TX2N_PR (20)
TX1P RN46 3 *0_4P2R_EZ 4 TX1P_PR — TX1P_PR (20)
TX1N 1 2 TX1N_PR — TX1N_PR (20)
TX0P RN47 3 *0_4P2R_EZ 4 TX0P_PR — TX0P_PR (20)
TX0N 1 2 TX0N_PR — TX0N_PR (20)
RN43 *0_4P2R_EZ
LAN_LINKLED# 1 2 D_LINKED# (20)
LAN_ACTLED# 3 4 D_ACTLED# (20)

+3V_2.5V_LAN
C459 .01u_4, C460 .01u_4
C458 *.01u_4, C457 *.01u_4

U22 NS892402P
+3V_2.5V_LAN 1 TX3P 2 TX3N 3 — TCT1 TD1+ TD1- MCT1 MX1+ MX1- — 24 23 22 TERM4 — X-TX3P X-TX3N
+3V_2.5V_LAN 4 TX2P 5 TX2N 6 — TCT2 TD2+ TD2- MCT2 MX2+ MX2- — 21 20 19 TERM3 — X-TX2P X-TX2N
+3V_2.5V_LAN 7 TX1P 8 TX1N 9 — TCT3 TD3+ TD3- MCT3 MX3+ MX3- — 18 17 16 TERM2 — X-TX1P X-TX1N
+3V_2.5V_LAN 10 TX0P 11 TX0N 12 — TCT4 TD4+ TD4- MCT4 MX4+ MX4- — 15 14 13 TERM1 — X-TX0P X-TX0N

R335 75/F_4, R334 75/F_4, R333 *75/F_4, R332 *75/F_4
C427 1500p/3KV_1808

TERMINATION PLANE

CN12
+3V_S5 R328 220_4 1 LED1_YELP_A1
LAN_ACTLED# 2 LED1_YELN_A2
X-TX3N 3 RX2-/3N
X-TX3P 4 RX2+/3P
X-TX1N 5 RX1-/1N
X-TX2N 6 TX2-/2N
X-TX2P 7 TX2+/2P
X-TX1P 8 RX1+/1P
X-TX0N 9 TX1-/0N
X-TX0P 10 TX1+/0P
GND 15, GND 16, GND 17, GND 18
+3V_S5 R331 220_4 11 LED2_GRNNP_B2
LAN_LINKLED# 12 LED2_GRNN_B2
RINGL 14 RING
TIPL 13 TIP
TYCO_1770344

C435 470p/3KV_1808 RINGL
C434 470p/3KV_1808 TIPL
CN16 2 1
MDC_CABLE

PROJECT : CH1
Quanta Computer Inc.

Size	Document Number	Rev
	LAN (BCM5788M Or 4401)	2A

Date: Friday, July 08, 2005 Sheet 13 of 30

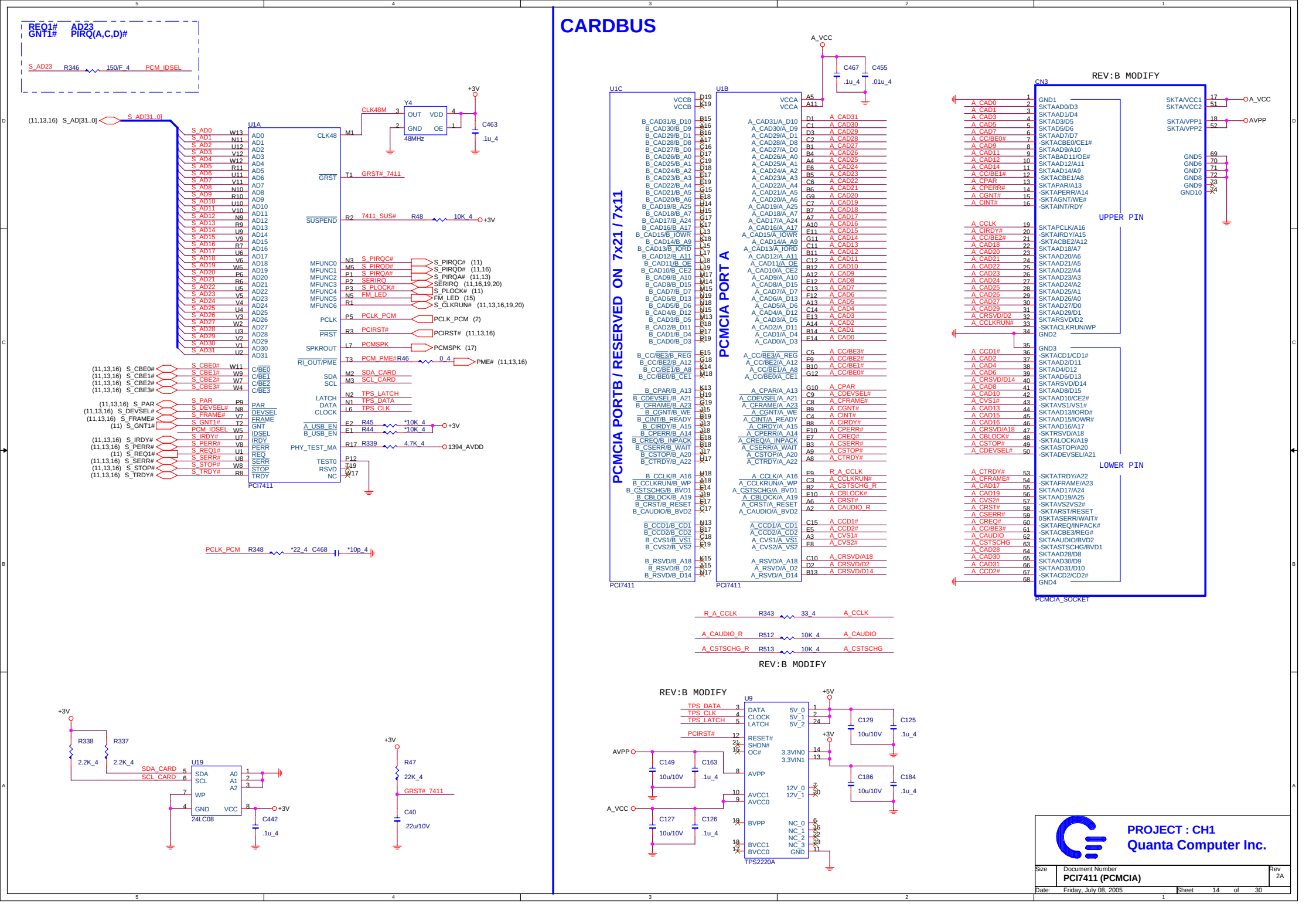
CARDBUS
REQ1# AD23
GNT1# PIRQ(A,C,D)#
S_AD23 R346 150/F 4 PCM_IDSEL
U1A
PCI7411
Y4
48MHz
CLK48M
+3V
C463 .1u_4
S_AD[31..0]
(11,13,16) S_AD[31..0]
GRST
GRST#_7411
SUSPEND
7411_SUS#
R48 10K_4
MFUNC0 S_PIRQC#
MFUNC1 S_PIRQD#
MFUNC2 S_PIRQA#
MFUNC3 SERIRQ
MFUNC4 S_PLOCK#
MFUNC5 FM_LED
MFUNC6
PCLK PCLK_PCM
PRST PCIRST#
SPKROUT PCMSPK
RI_OUT/PME PCM_PME# R46 0_4
SDA SDA_CARD
SCL SCL_CARD
LATCH TPS_LATCH
DATA TPS_DATA
CLOCK TPS_CLK
A_USB_EN R45 *10K_4
B_USB_EN R44 *10K_4
PHY_TEST_MA R17 R339 4.7K_4 1394_AVDD
TEST0 P12
RSVD T19
NC W17
S_PIRQC# (11)
S_PIRQD# (11,16)
S_PIRQA# (11,13)
SERIRQ (11,16,19,20)
S_PLOCK# (11)
FM_LED (15)
S_CLKRUN# (11,13,16,19,20)
PCLK_PCM (2)
PCIRST# (11,13,16)
PCMSPK (17)
PME# (11,13,16)
(11,13,16) S_CBE0# S_CBE1# S_CBE2# S_CBE3#
(11,13,16) S_PAR (11,13,16) S_DEVSEL# (11,13,16) S_FRAME# (11) S_GNT1# PCM_IDSEL
(11,13,16) S_IRDY# (11,13,16) S_PERR# (11) S_REQ1# (11,13,16) S_SERR# (11,13,16) S_STOP# (11,13,16) S_TRDY#
PCLK_PCM R348 *22_4 C468 *10p_4
+3V
R338 2.2K_4
R337 2.2K_4
SDA_CARD
SCL_CARD
U19
24LC08
C442 .1u_4
R47 22K_4
GRST#_7411
C40 .22u/10V
U1C
PCMCIA PORTB / RESERVED ON 7x21 / 7x11
U1B
PCMCIA PORT A
A_VCC
C467 .1u_4
C455 .01u_4
R_A_CCLK R343 33_4 A_CCLK
A_CAUDIO_R R512 10K_4 A_CAUDIO
A_CSTSCHG_R R513 10K_4 A_CSTSCHG
REV:B MODIFY
CN3
PCMCIA_SOCKET
UPPER PIN
LOWER PIN
SKTA/VCC1 A_VCC
SKTA/VPP1 AVPP
U9
TPS2220A
TPS_DATA
TPS_CLK
TPS_LATCH
PCIRST#
AVPP
A_VCC
C149 10u/10V
C163 .1u_4
C127 10u/10V
C126 .1u_4
C129 10u/10V
C125 .1u_4
C186 10u/10V
C184 .1u_4
PROJECT : CH1
Quanta Computer Inc.
Size
Document Number
PCI7411 (PCMCIA)
Rev 2A
Date: Friday, July 08, 2005
Sheet 14 of 30

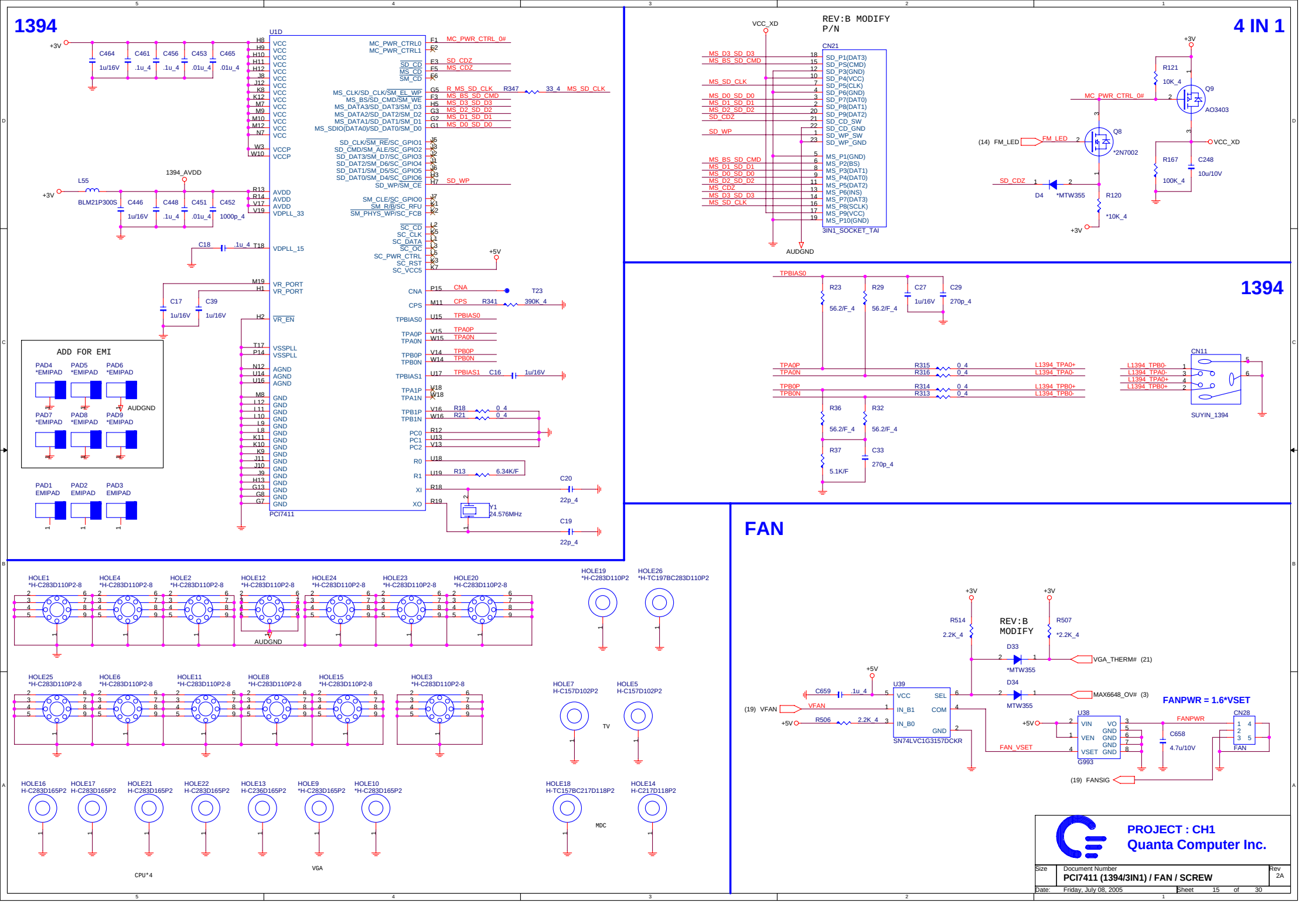
1394
U1D
PCI7411
ADD FOR EMI
PAD4 *EMIPAD
PAD5 *EMIPAD
PAD6 *EMIPAD
PAD7 *EMIPAD
PAD8 *EMIPAD
PAD9 *EMIPAD
PAD1 EMIPAD
PAD2 EMIPAD
PAD3 EMIPAD
AUDGND
4 IN 1
REV:B MODIFY P/N
CN21
3IN1_SOCKET_TAI
Q9
AO3403
Q8
*2N7002
D4
*MTW355
R120
*10K_4
R121
10K_4
R167
100K_4
C248
10u/10V
VCC_XD
1394
CN11
SUYIN_1394
FAN
REV:B MODIFY
U39
SN74LVC1G3157DCKR
U38
G993
CN28
FANPWR = 1.6*VSET
C658
4.7u/10V
HOLE1 *H-C283D110P2-8
HOLE4 *H-C283D110P2-8
HOLE2 *H-C283D110P2-8
HOLE12 *H-C283D110P2-8
HOLE24 *H-C283D110P2-8
HOLE23 *H-C283D110P2-8
HOLE20 *H-C283D110P2-8
HOLE19 *H-C283D110P2
HOLE26 *H-TC197BC283D110P2
HOLE25 *H-C283D110P2-8
HOLE6 *H-C283D110P2-8
HOLE11 *H-C283D110P2-8
HOLE8 *H-C283D110P2-8
HOLE15 *H-C283D110P2-8
HOLE3 *H-C283D110P2-8
HOLE7 H-C157D102P2
HOLE5 H-C157D102P2
TV
HOLE16 H-C283D165P2
HOLE17 H-C283D165P2
HOLE21 H-C283D165P2
HOLE22 H-C283D165P2
HOLE13 H-C236D165P2
HOLE9 *H-C283D165P2
HOLE10 *H-C283D165P2
CPU*4
VGA
HOLE18 H-TC157BC217D118P2
HOLE14 H-C217D118P2
MDC
PROJECT : CH1
Quanta Computer Inc.
Size
Document Number
PCI7411 (1394/3IN1) / FAN / SCREW
Rev 2A
Date: Friday, July 08, 2005
Sheet 15 of 30

MINI-PCI

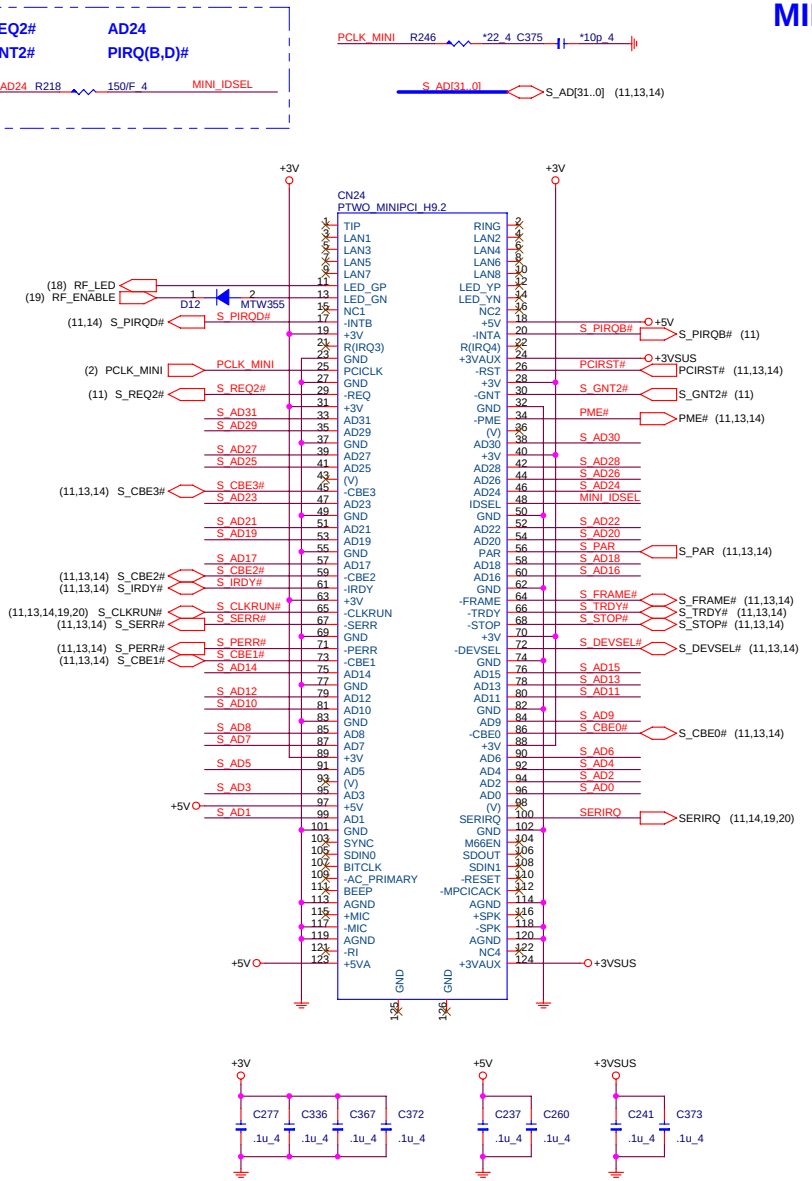

MDC

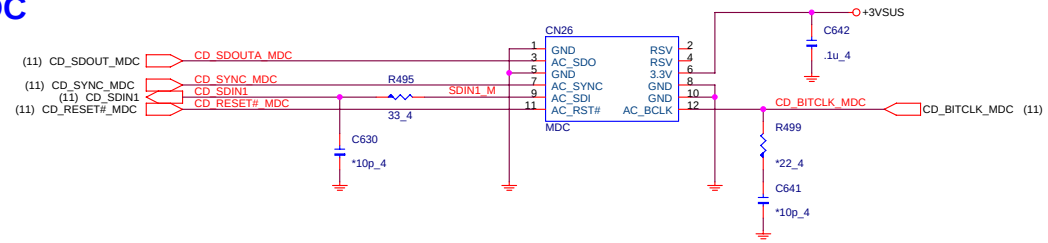

USB

SYSTEM USB * 2

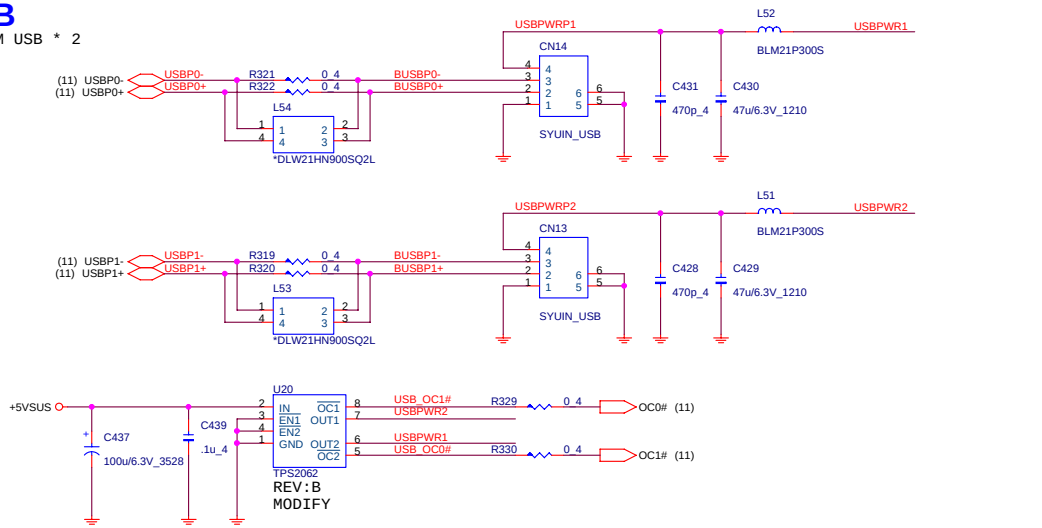

TPM 1.2

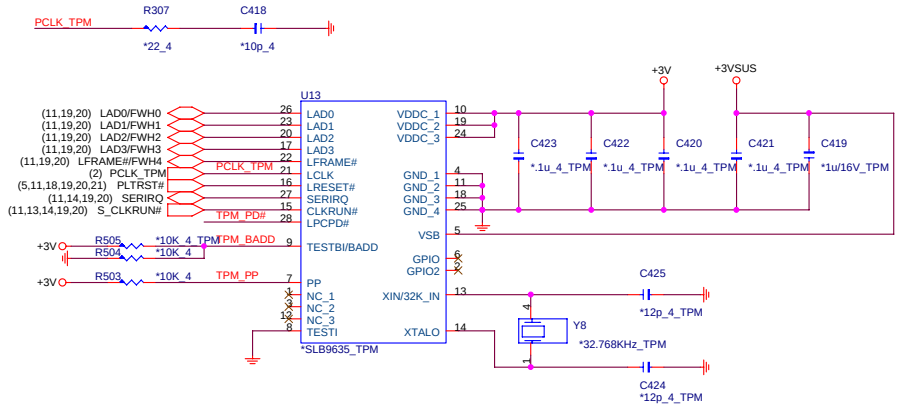

TPM_BADD
HI : 4E/4F h
LOW : 2E / 2F h

TPM_PP
HI : ACCESS
LOW : NORMAL (Internal PD)

BLUETOOTH

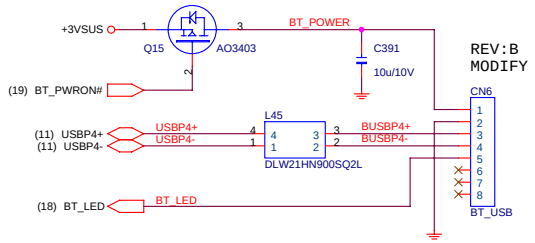

PROJECT : CH1
Quanta Computer Inc.

Size	Document Number	Rev
	MINIPCI/USB/MDC	2A

Date: Friday, July 08, 2005 Sheet 16 of 30

AUDIO CODEC

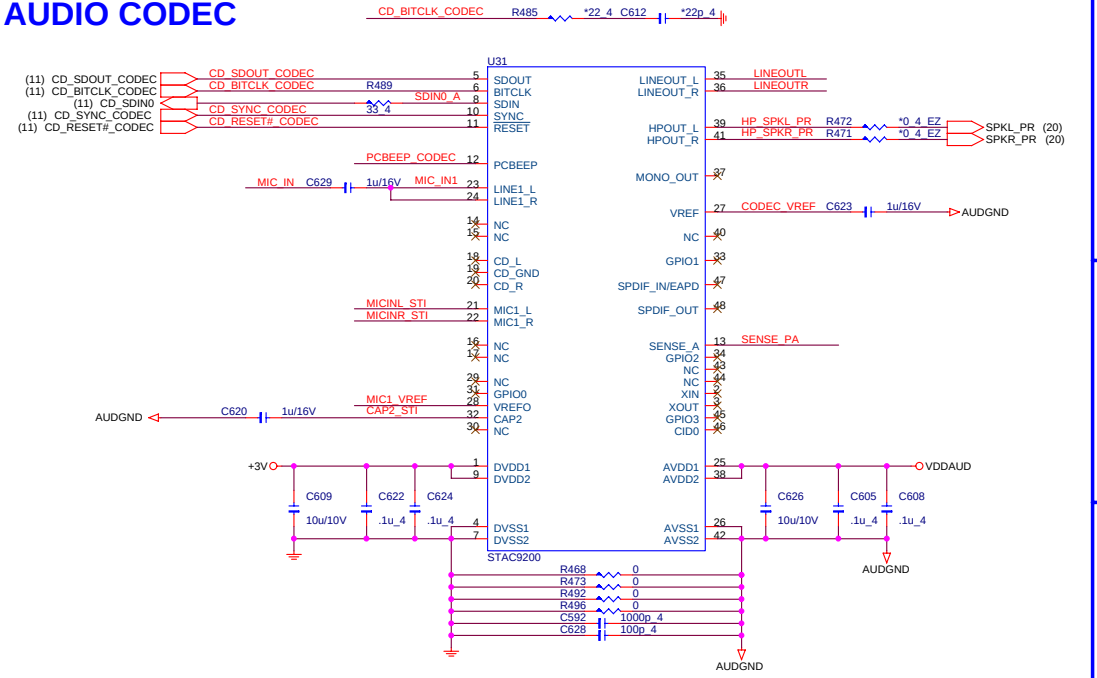

PC BEEP

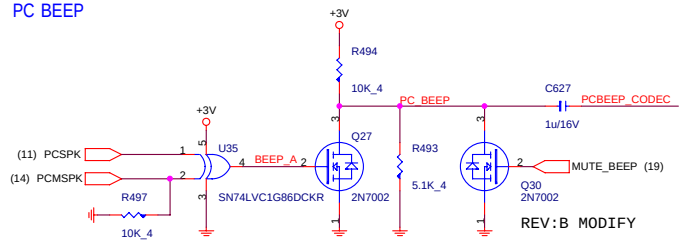

AUDIO POWER

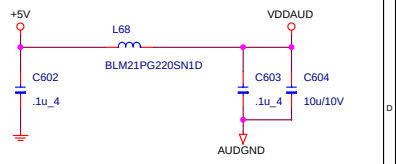

INT MIC

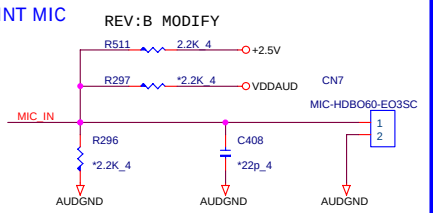

INT SPEAKER

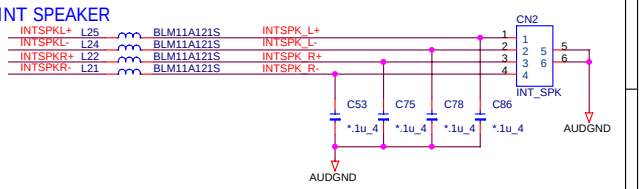

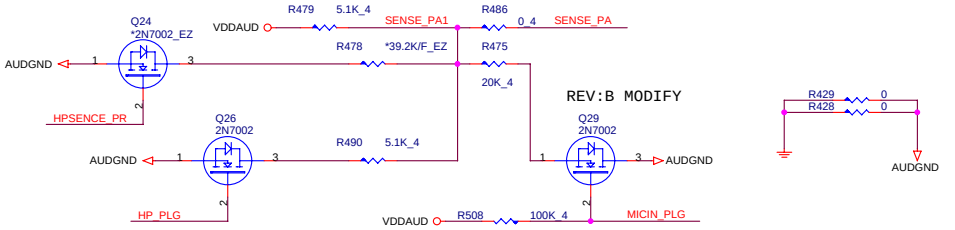

MIC

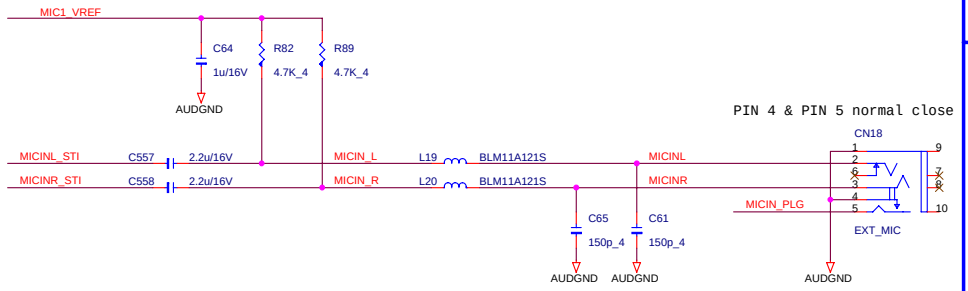

HEADPHONE

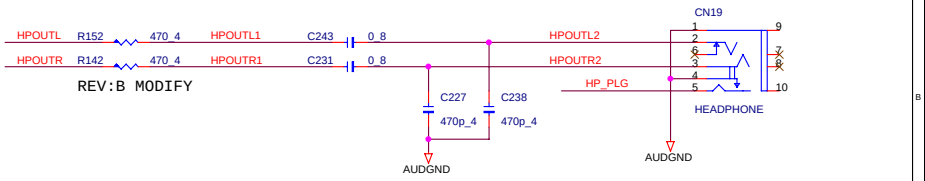

AMP

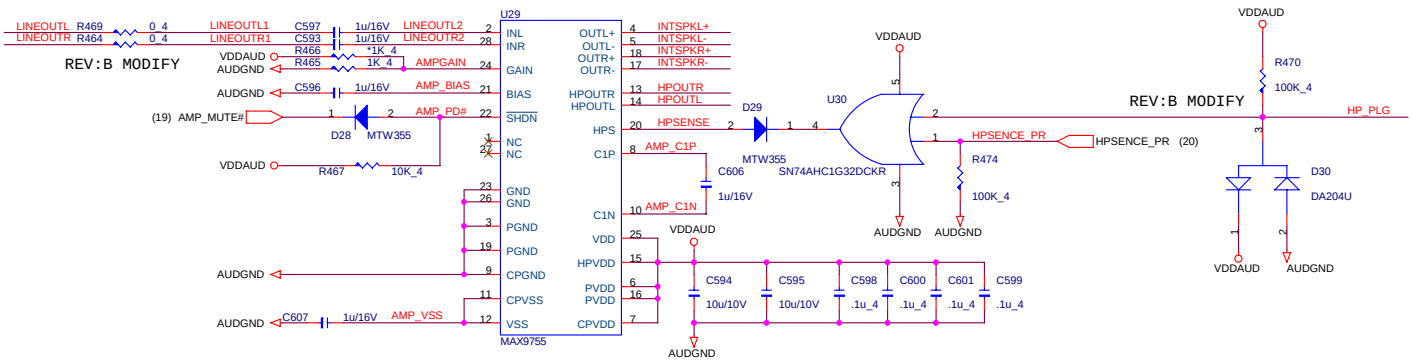

PROJECT : CH1
Quanta Computer Inc.

Size	Document Number	Rev
	AUDIO (CODEC/AMP)	2A

Date: Friday, July 08, 2005 Sheet 17 of 30

HDD

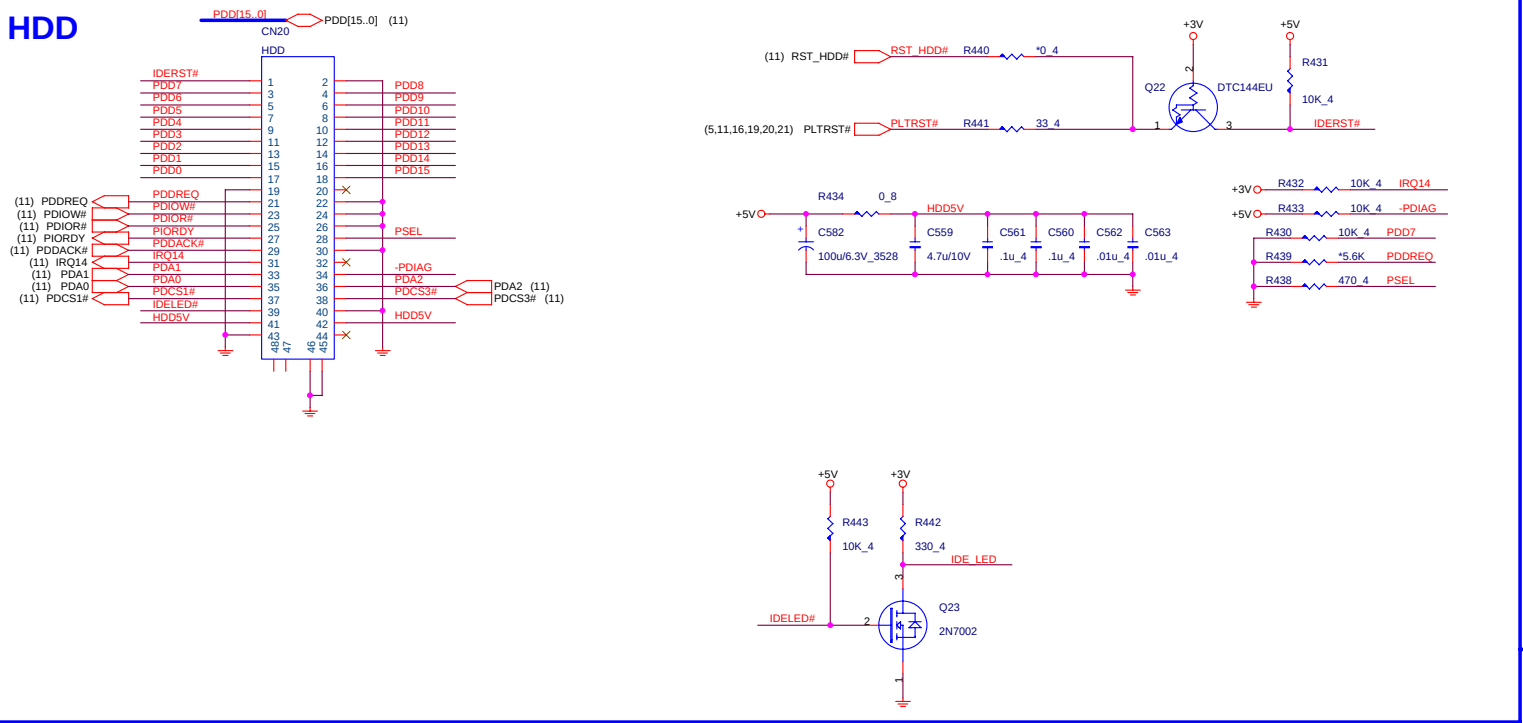

LED

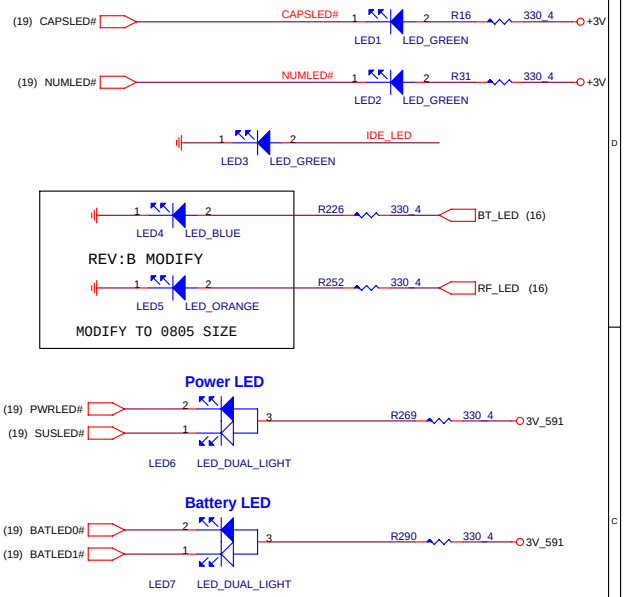

ODD

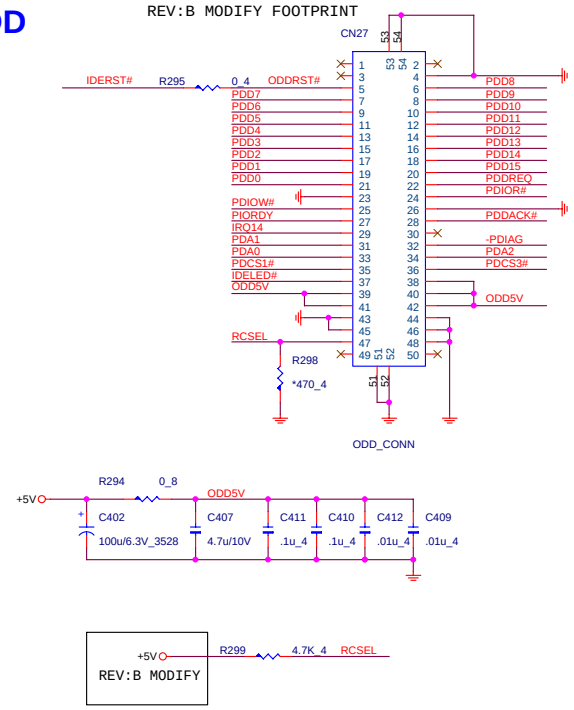

TP BOARD CONN

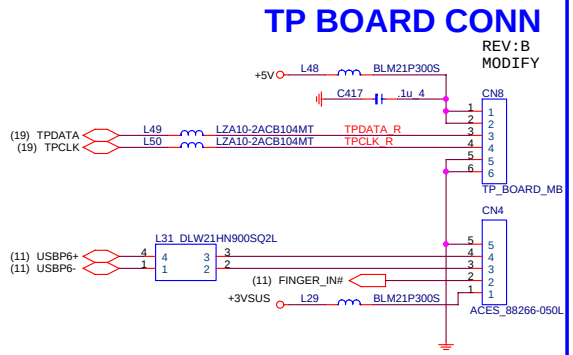

TV BOARD CONN

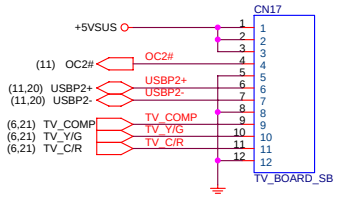

SWITCH BOARD CONN

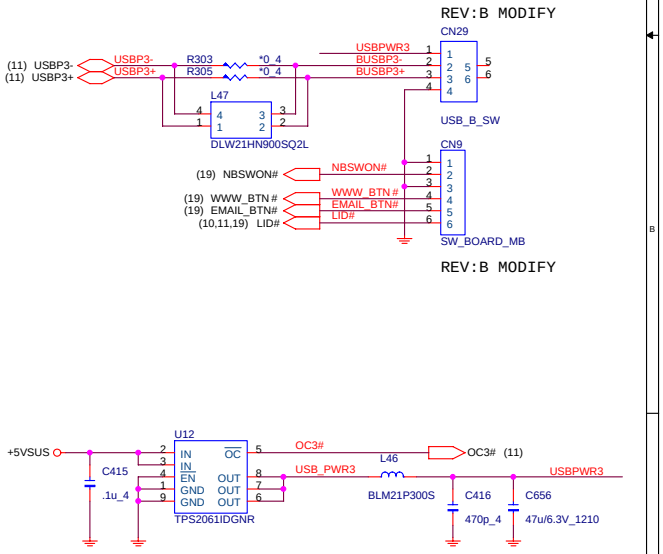

PROJECT : CH1
Quanta Computer Inc.

Size	Document Number	Rev
	HDD/FAN/LED/SW/TP/SCREW	2A

Date: Friday, July 08, 2005 Sheet 18 of 30

K/B CONTROLLER

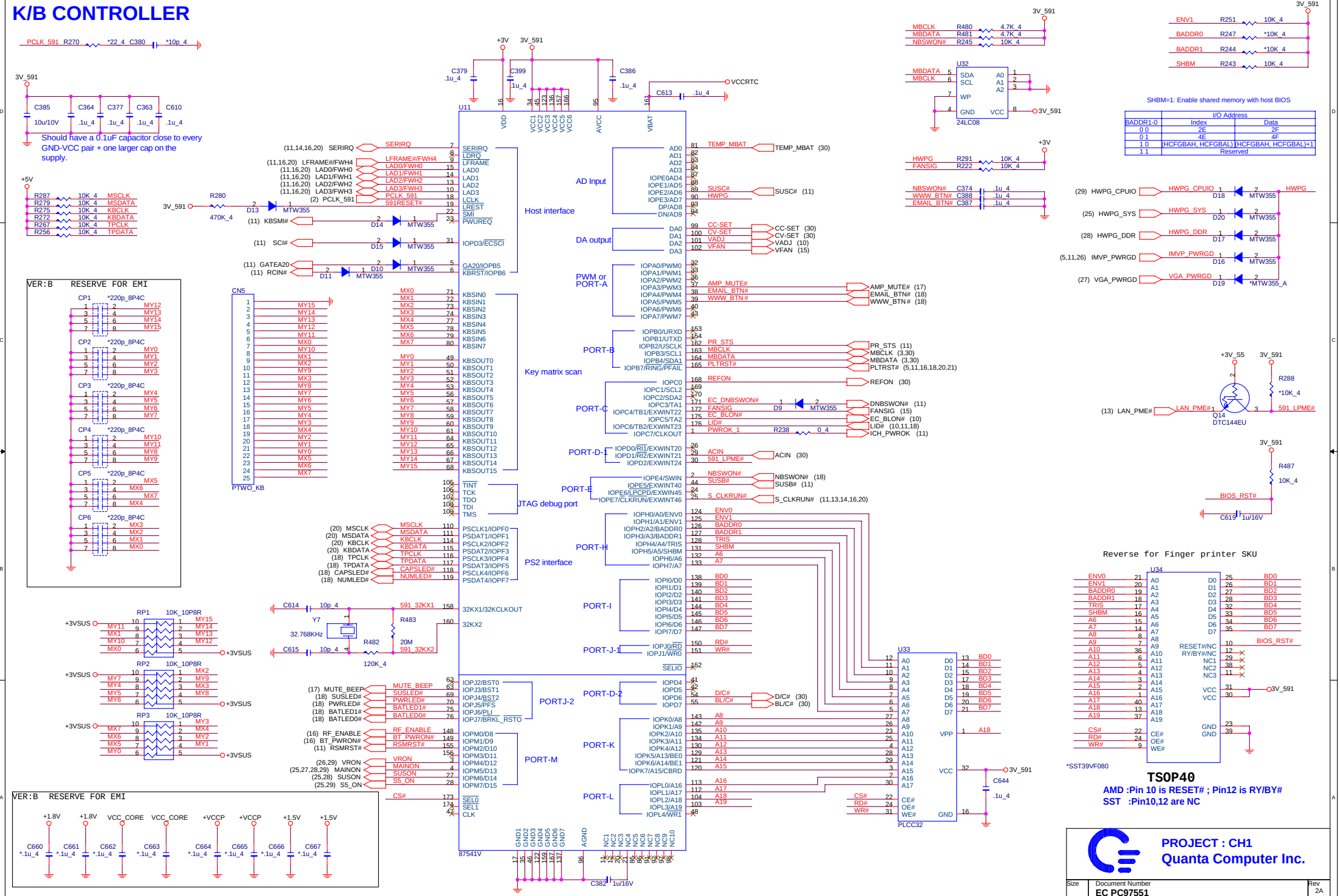

I/O Address		
BADDR1-0	Index	Data
0 0	2E	2F
0 1	4E	4F
1 0	(HCFGBAH, HCFGBAL)	(HCFGBAH, HCFGBAL)+1
1 1	Reserved	

SUPER I/O

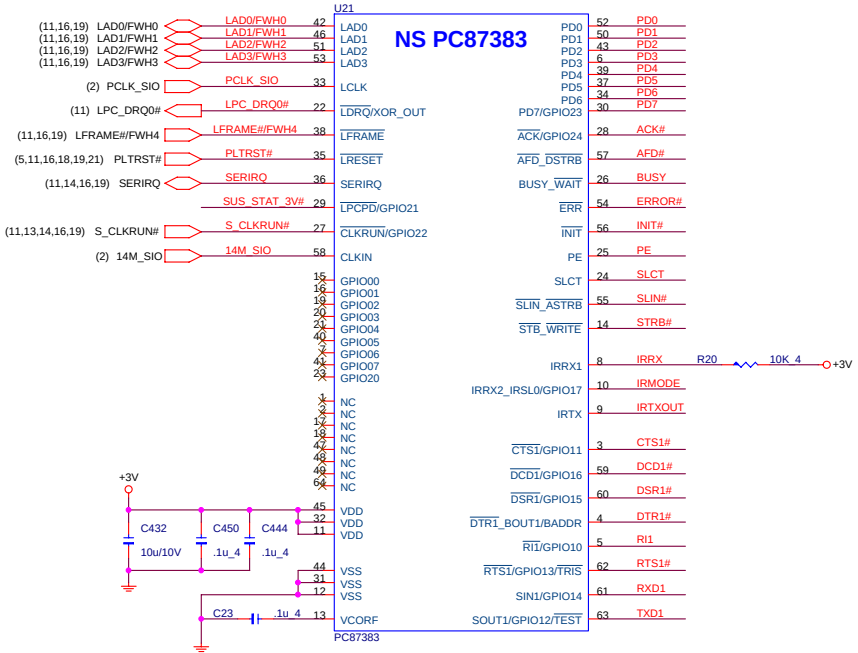

EZ PORT

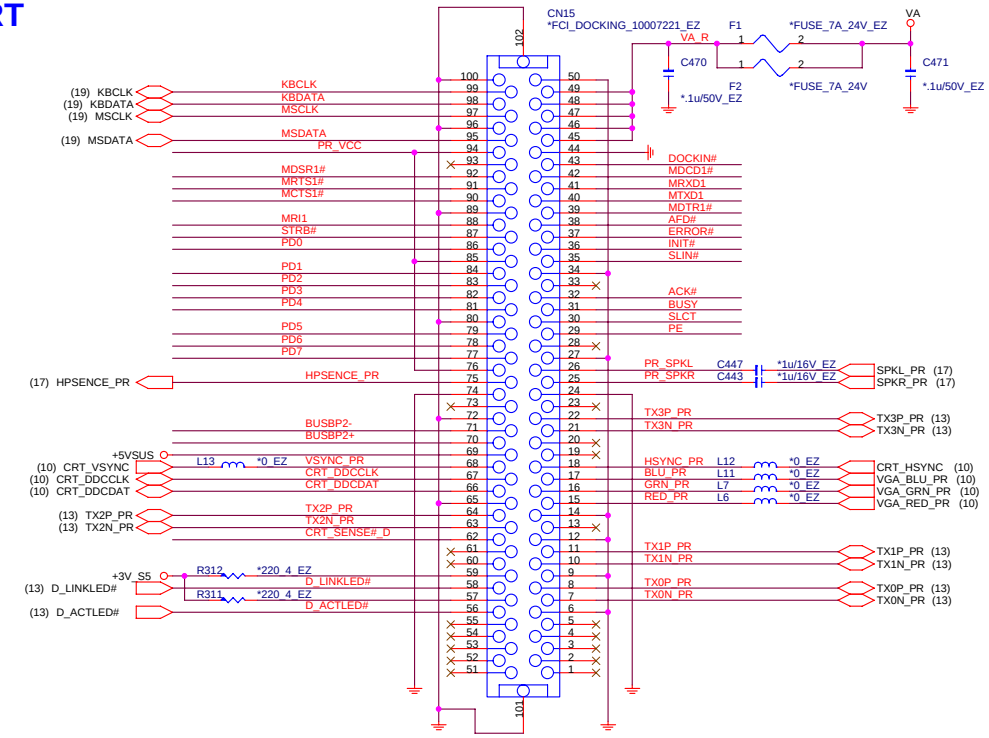

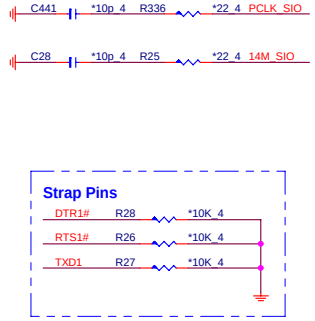

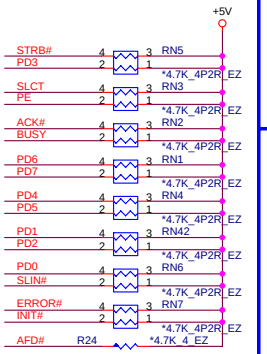

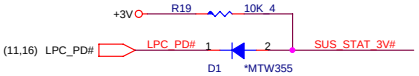

IrDA

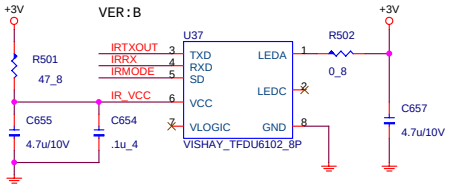

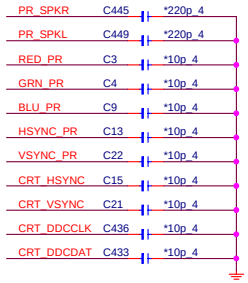

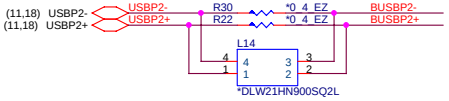

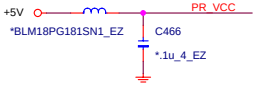

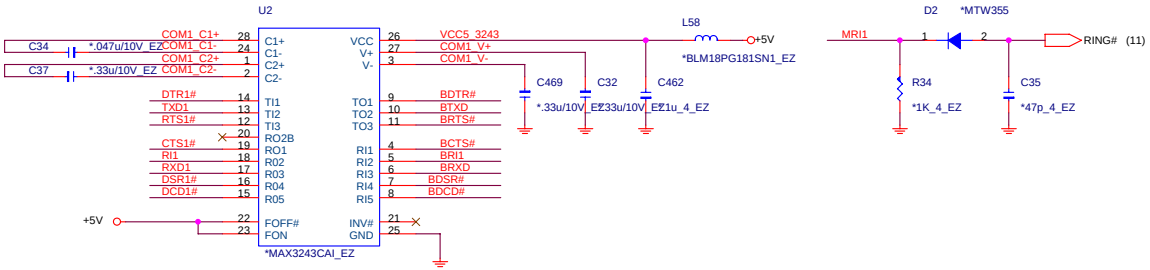

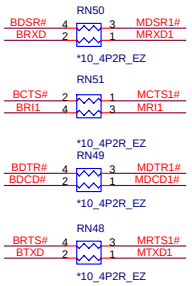

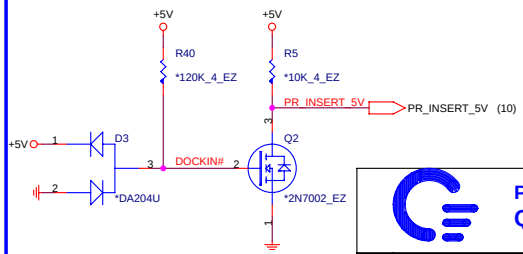

PROJECT : ZH1
Quanta Computer Inc.

Size	Document Number	Rev
	SIO PC87383 & EZ PORT	2A

Date: Friday, July 08, 2005 Sheet 20 of 30

NVIDIA NV44M-V G3-64 (23X 23)

0.1u Capacitors place at last 1/3 of trace

(6) GMCHEXP_TXP[0..15]
(6) GMCHEXP_TXN[0..15]
(6) GMCHEXP_RXP[0..15]
(6) GMCHEXP_RXN[0..15]

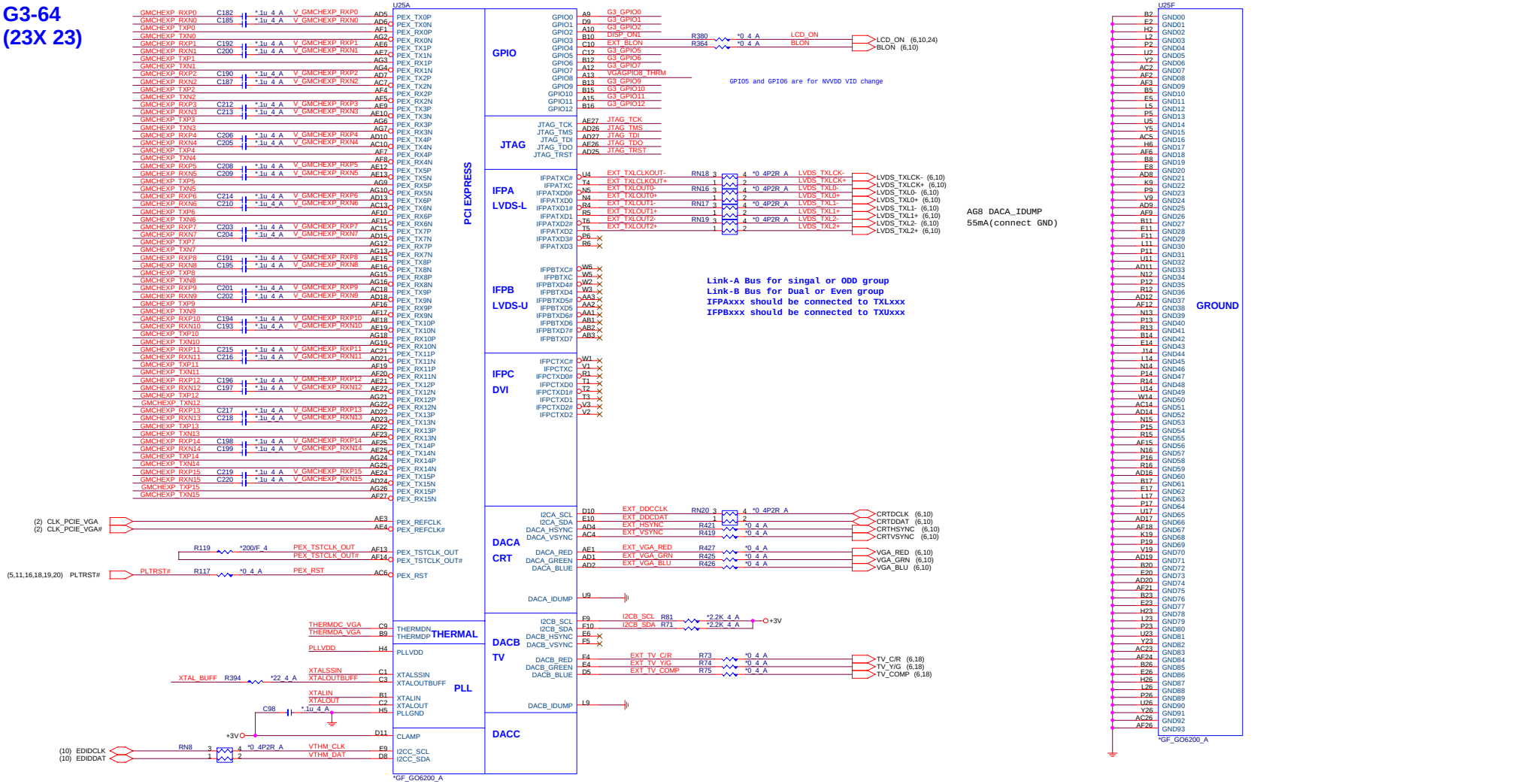

PLACE CLOSE TO GPU

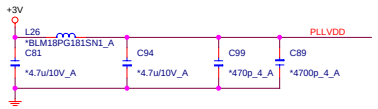

MEMORY CLOCK SPREAD SPECTRUM

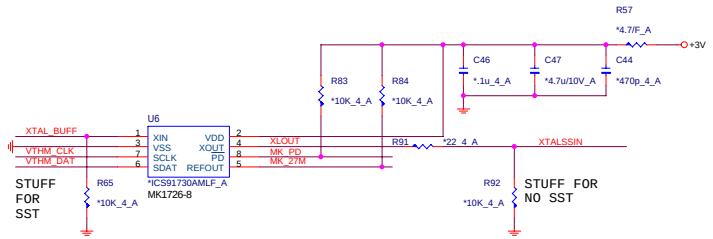

Thermal Sensor for Graphic

SLAVE ADDRESS: 9A

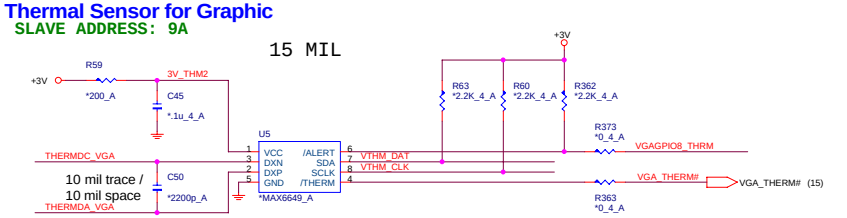

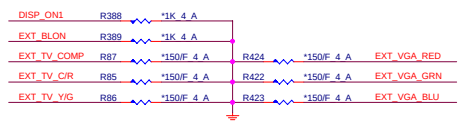

PROJECT : CH1
Quanta Computer Inc.

Size	Document Number	Rev
	NV44M-V (PCIE/DAC/GND)	2A

Date: Friday, July 08, 2005 Sheet 21 of 30

PROJECT : CH1

Quanta Computer Inc.

Size	Document Number	Rev
	NV44M-V (MEMORY A/B)	2A

Date: Friday, July 08, 2005 Sheet 22 of 30

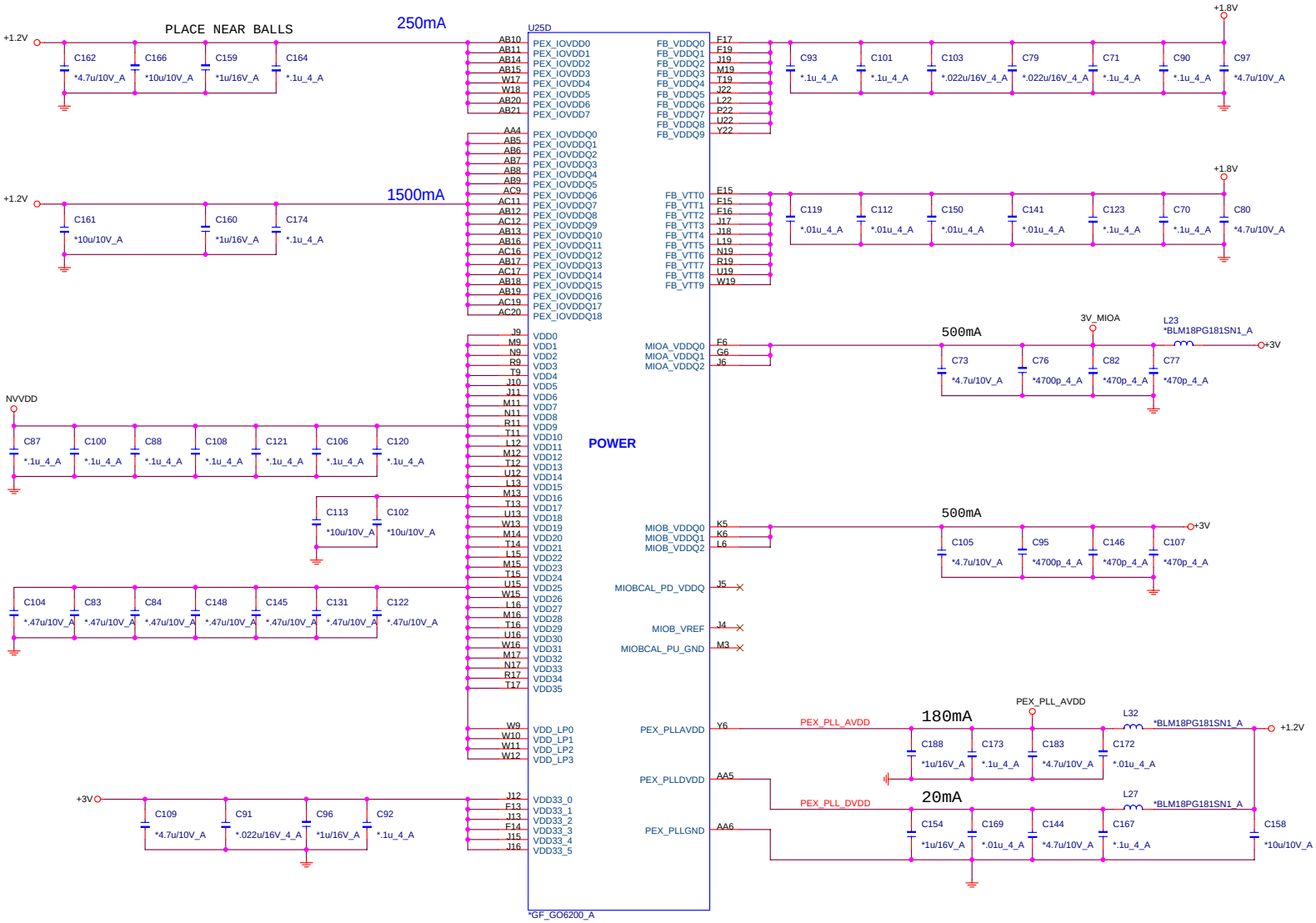

PROJECT : CH1
Quanta Computer Inc.

Size	Document Number	Rev
	NV44M-V (POWER)	2A

Date: Friday, July 08, 2005 Sheet 23 of 30

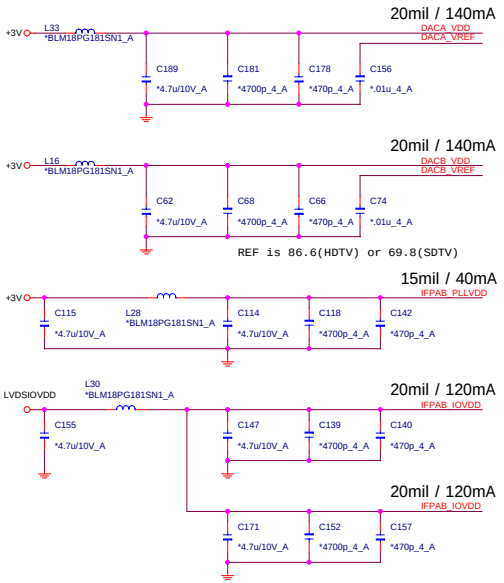

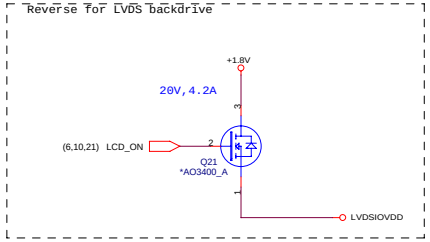

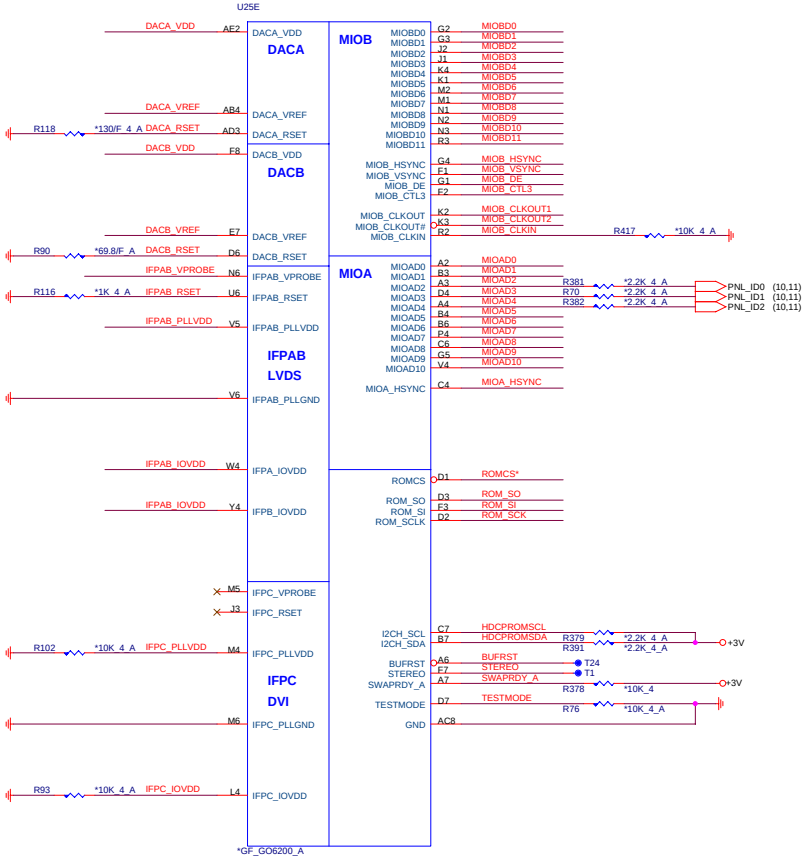

DACA FOR CRT
DACB FOR TV
IFPA & IFPB ARE FOR LVDS INTERFACE
IFPC & IFPD ARE FOR TMDS INTERFACE

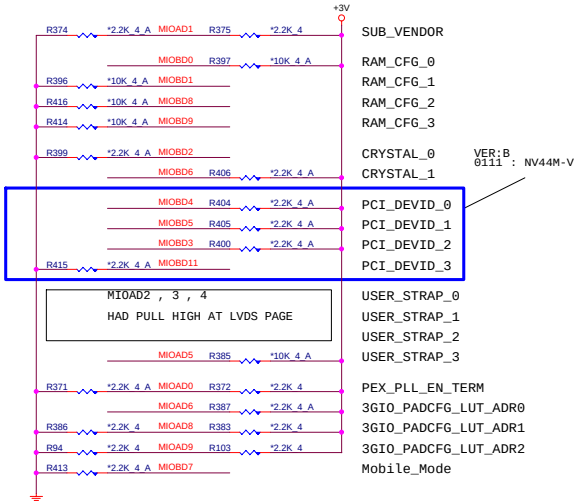

FUNCTION	NV4x and MEP4x	SETTING	
SUB_VENDOR	MIOAD1	LOW	LOW: BIOS PRESENT HI : BIOS NOT PRESENT
RAMCFG0 RAMCFG1 RAMCFG2 RAMCFG3	MIOBD0 MIOBD1 MIOBD8 MIOBD9	HI LOW LOW LOW	0001 : 8M X 32 0100 : 4M X 32
CRYSTAL0 CRYSTAL1	MIOBD2 MIOBD6	LOW HI	00 : 13.5MHz 01 : 14.31818MHz 10 : 27.0MHz
PCI_DEVID0 PCI_DEVID1 PCI_DEVID2 PCI_DEVID3	MIOBD4 MIOBD5 MIOBD3 MIOBD11	LOW LOW LOW HI	1000 : NV44M 0111 : NV44M-V
USER0 USER1 USER2 USER3	MIOAD2 MIOAD3 MIOAD4 MIOAD5	HI HI HI HI	USER_STRAP[3::0] 1111 //Panel ID strap
PEX_PLL_EN_TERM	MIOAD0	LOW	0 : ENABLE PCI-E PLL TERMINATION 1 : DISABLE PCI-E PLL TERMINATION
3GIO_PADCFG_LUT_ADR0	MIOAD6	HI	0 : DESKTOP 1 : MOBILE
3GIO_PADCFG_LUT_ADR1 3GIO_PADCFG_LUT_ADR2	MIOBD8 MIOBD9	LOW LOW	00 : NV43/NV44 01 : G7X / NV42
Mobile_Mode	MIOBD7	LOW	MOBILE GPIO : 0 : GPIO PULL DOWN MOBILE GPIO : 1 : GPIO FLOAT

PROJECT : CH1
Quanta Computer Inc.

Size	Document Number	Rev
	NV44M-V (STRAP/MISC)	2A

Date: Friday, July 08, 2005 Sheet 24 of 30

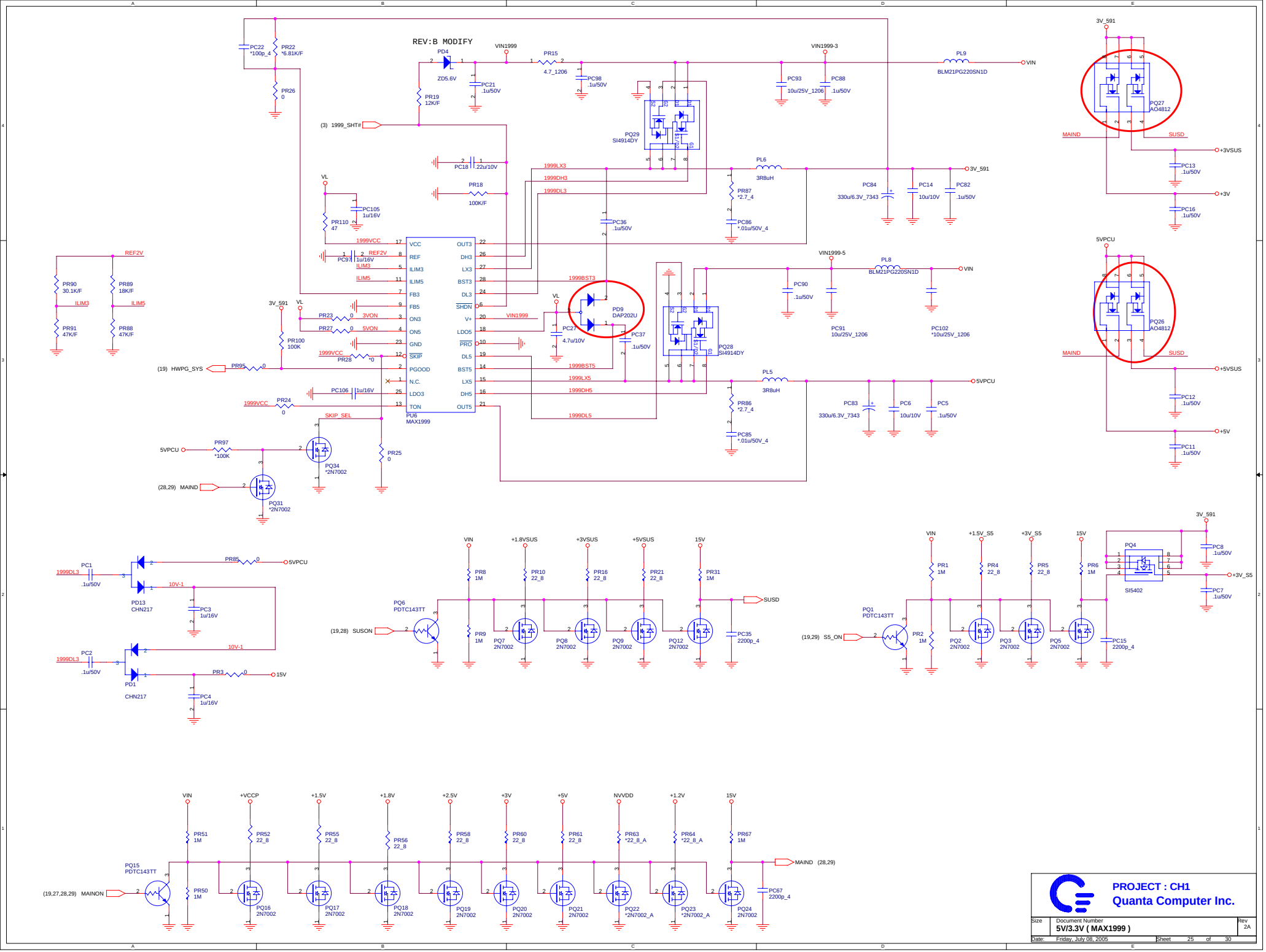
REV:B MODIFY
PU6
MAX1999
VCC
REF
ILIM3
ILIM5
FB3
FB5
ON3
ON5
GND
SKIP
PGOOD
N.C.
LDO3
TON
OUT3
DH3
LX3
BST3
DL3
SHDN
V+
LDO5
PRO
DL5
BST5
LX5
DH5
OUT5
VIN
VIN1999
VIN1999-3
VIN1999-5
3V_591
5VPCU
+3VSUS
+3V
+5VSUS
+5V
+3V_S5
SUSD
15V
MAIND
MAINON
SUSON
S5_ON
HWPG_SYS
1999_SHT#
SKIP_SEL
1999VCC
1999LX3
1999DH3
1999DL3
1999BST3
1999LX5
1999DH5
1999DL5
1999BST5
3VON
5VON
10V-1
+1.8VSUS
+1.5V_S5
+VCCP
+1.5V
+1.8V
+2.5V
+3V
NVVDD
+1.2V
PD4 ZD5.6V
PD9 DAP202U
PQ29 SI4914DY
PQ28 SI4914DY
PQ27 AO4812
PQ26 AO4812
PQ4 SI5402
PQ6 PDTC143TT
PQ1 PDTC143TT
PQ15 PDTC143TT
PD13 CHN217
PD1 CHN217
PQ31 *2N7002
PQ34 *2N7002
PL9 BLM21PG220SN1D
PL8 BLM21PG220SN1D
PL6 3R8uH
PL5 3R8uH
PC84 330u/6.3V_7343
PC83 330u/6.3V_7343
PC91 10u/25V_1206
PC102 *10u/25V_1206
PC93 10u/25V_1206
PC88 .1u/50V
PC14 10u/10V
PC6 10u/10V
PC82 .1u/50V
PC5 .1u/50V
PC13 .1u/50V
PC16 .1u/50V
PC12 .1u/50V
PC11 .1u/50V
PC8 .1u/50V
PC7 .1u/50V
PC35 2200p_4
PC15 2200p_4
PC67 2200p_4
PR100 100K
PR110 47
PR90 30.1K/F
PR91 47K/F
PR89 18K/F
PR88 47K/F
PR19 12K/F
PR22 *6.81K/F
PR26 0
PR15 4.7_1206
PR18 100K/F
PR97 *100K
PR25 0
PR3
PR85
PC1 .1u/50V
PC2 .1u/50V
PC3 1u/16V
PC4 1u/16V
PC105 1u/16V
PC97 1u/16V
PC106 1u/16V
PC21 .1u/50V
PC98 .1u/50V
PC18 .22u/10V
PC36 .1u/50V
PC37 .1u/50V
PC27 4.7u/10V
PC90 .1u/50V
PR87 *2.7_4
PR86 *2.7_4
PC86 *.01u/50V_4
PC85 *.01u/50V_4
PR8 1M
PR9 1M
PR10 22_8
PR16 22_8
PR21 22_8
PR31 1M
PR1 1M
PR2 1M
PR4 22_8
PR5 22_8
PR6 1M
PR50 1M
PR51 1M
PR52 22_8
PR55 22_8
PR56 22_8
PR58 22_8
PR60 22_8
PR61 22_8
PR63 *22_8_A
PR64 *22_8_A
PR67 1M
PQ7 2N7002
PQ8 2N7002
PQ9 2N7002
PQ12 2N7002
PQ2 2N7002
PQ3 2N7002
PQ5 2N7002
PQ16 2N7002
PQ17 2N7002
PQ18 2N7002
PQ19 2N7002
PQ20 2N7002
PQ21 2N7002
PQ22 *2N7002_A
PQ23 *2N7002_A
PQ24 2N7002
PROJECT : CH1
Quanta Computer Inc.
Size
Document Number
5V/3.3V (MAX1999)
Rev 2A
Date: Friday, July 08, 2005
Sheet 25 of 30

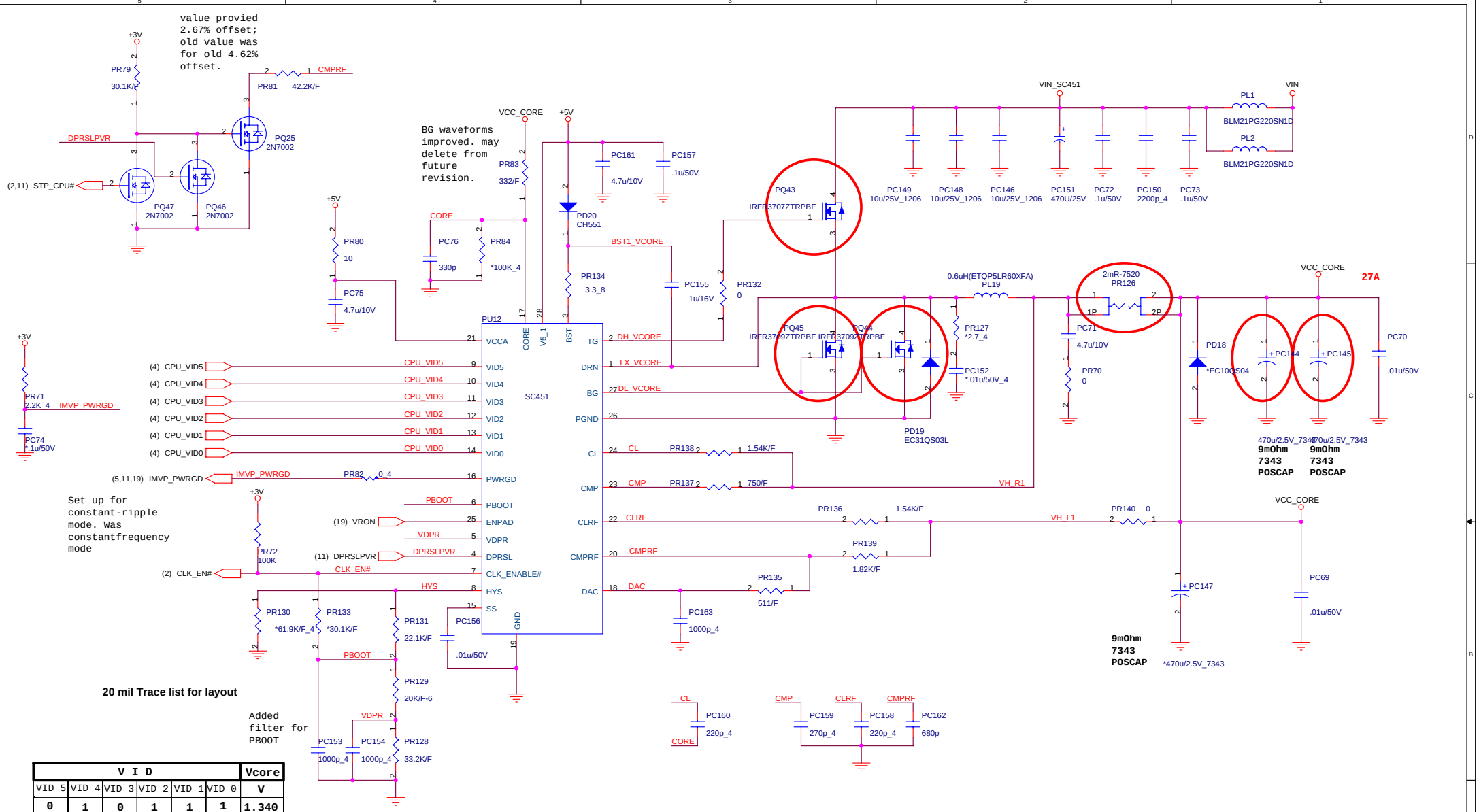

20 mil Trace list for layout

100 mil Trace list for layout

DH_VCORE
LX_VCORE
DL_VCORE
DH_VCORE2
LX_VCORE2
DL_VCORE2

10 mil Trace list for layout

SC1476
pin 4 pin
5 pin 7
pin 25
pin 30

V I D						Vcore
VID 5	VID 4	VID 3	VID 2	VID 1	VID 0	V
0	1	0	1	1	1	1.340
0	1	1	0	0	0	1.324
0	1	1	0	1	0	1.292
0	1	1	1	0	0	1.260
0	1	1	1	0	1	1.244
0	1	1	1	1	1	1.212
1	0	0	0	0	1	1.180
1	0	0	0	1	1	1.148
1	0	0	1	1	0	1.100
1	0	1	0	0	1	1.052
1	0	1	0	1	1	1.020
1	0	1	1	1	0	0.972
1	1	0	0	0	0	0.940

PROJECT : CH1
Quanta Computer Inc.

Size	Document Number	Rev
	CPU CORE (MAX1907)	2A

Date: Friday, July 08, 2005 Sheet 26 of 30

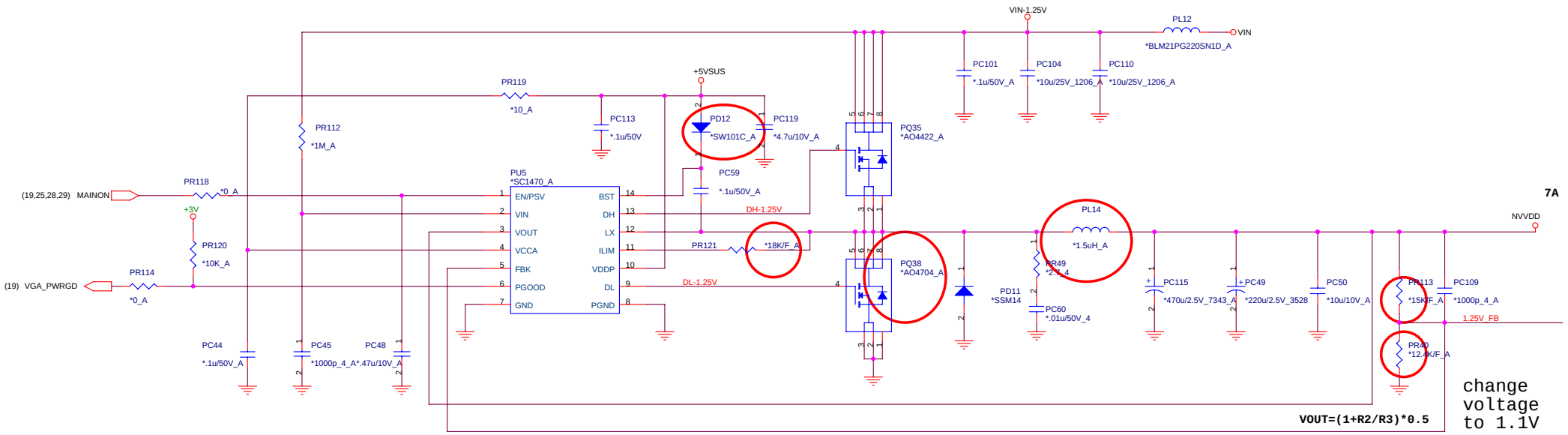

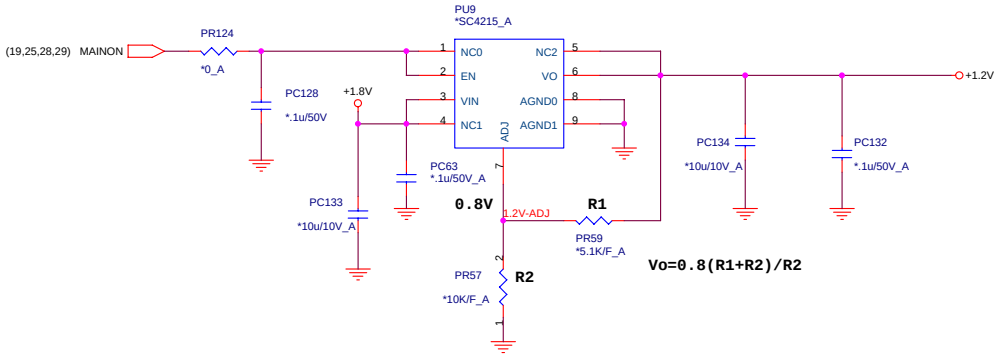

PROJECT : CH1
Quanta Computer Inc.

Size	Document Number	Rev
	VGA+1.25V\+1.2V	2A

Date: Friday, July 08, 2005 Sheet 27 of 30

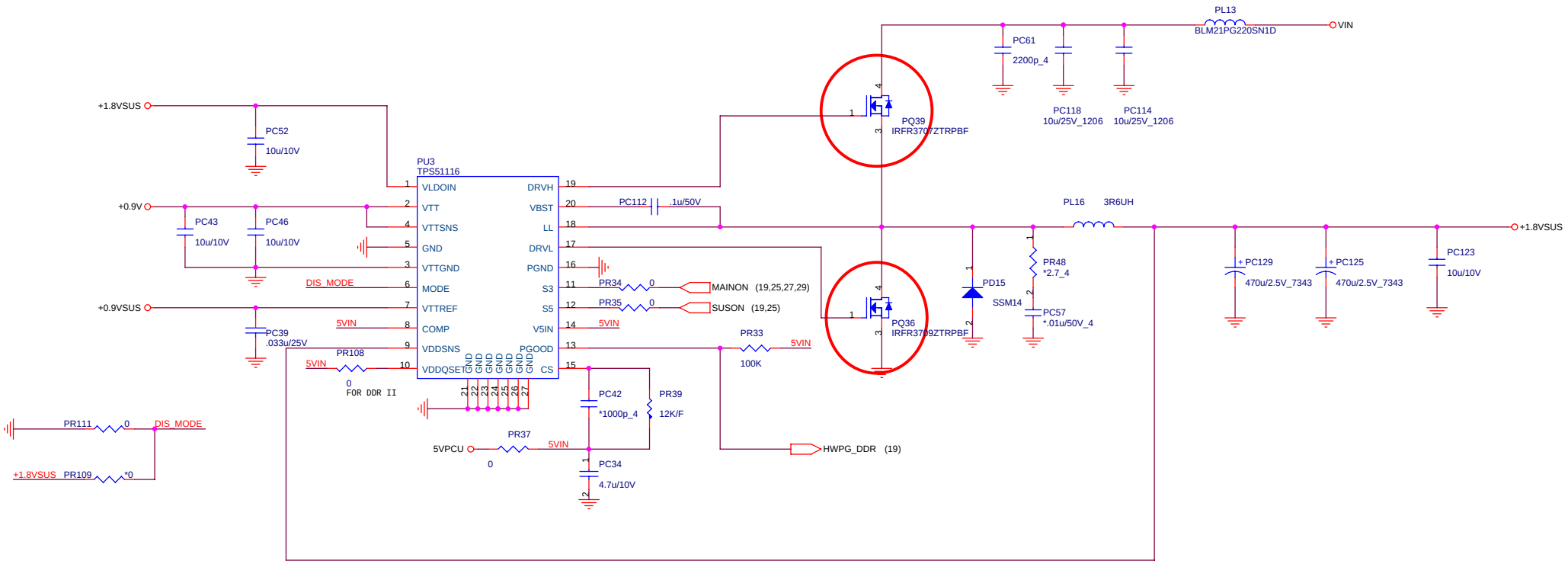

PROJECT : CH1

Quanta Computer Inc.

Size	Document Number	Rev
	1.8VSUS / 0.9VTERM	2A

Date: Friday, July 08, 2005 Sheet 28 of 30

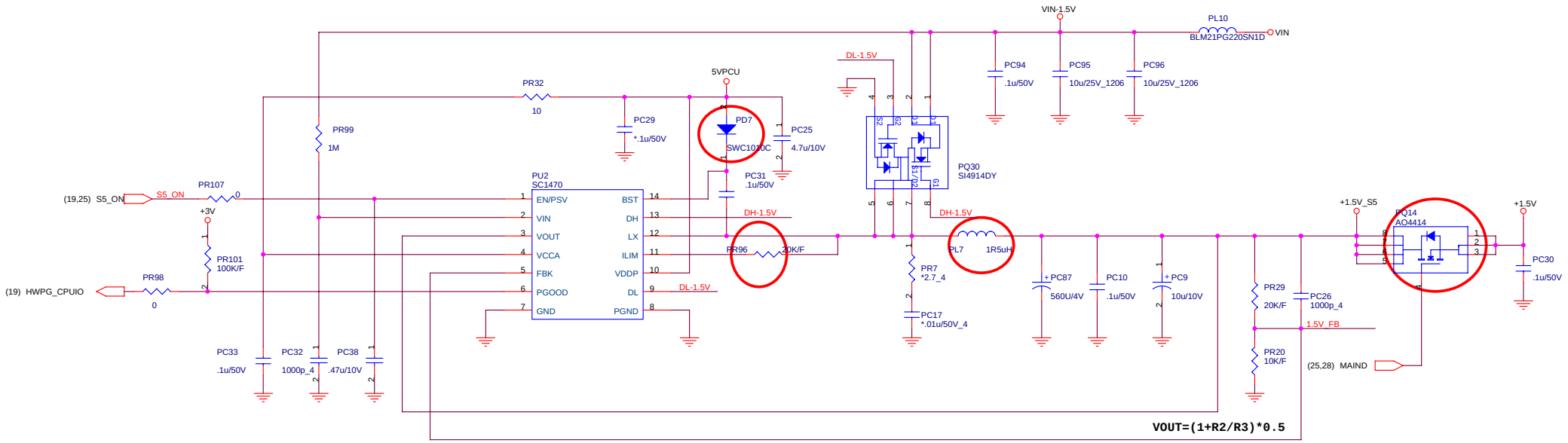

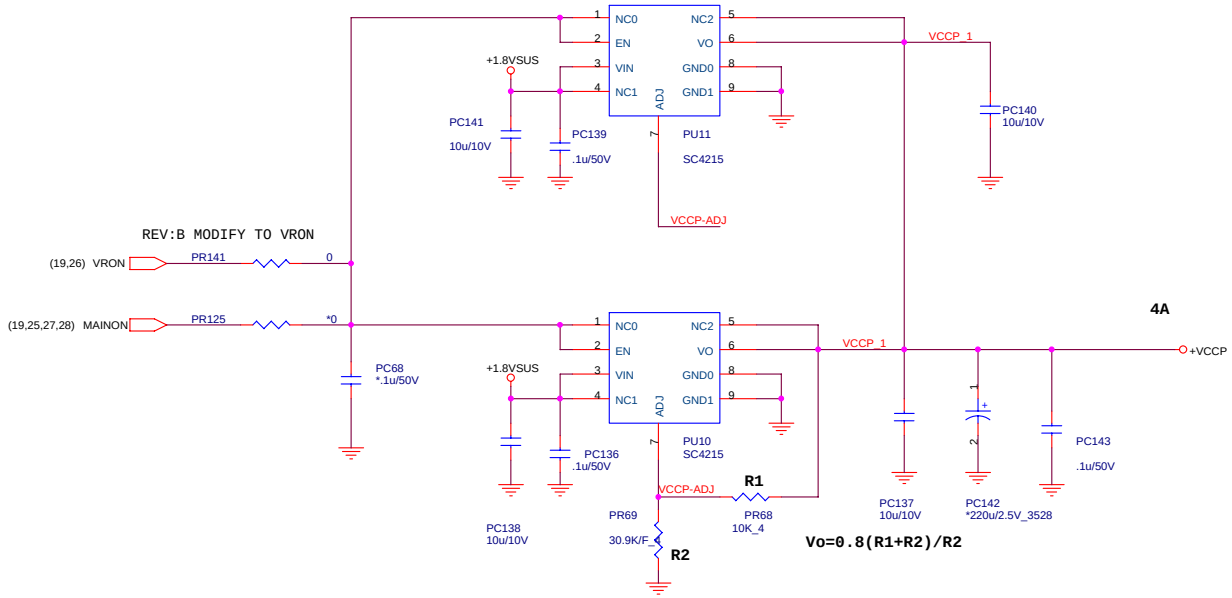

PROJECT : CH1
Quanta Computer Inc.

Size	Document Number	Rev
	+1.5V / +VCCP	2A

Date: Friday, July 08, 2005 Sheet 29 of 30

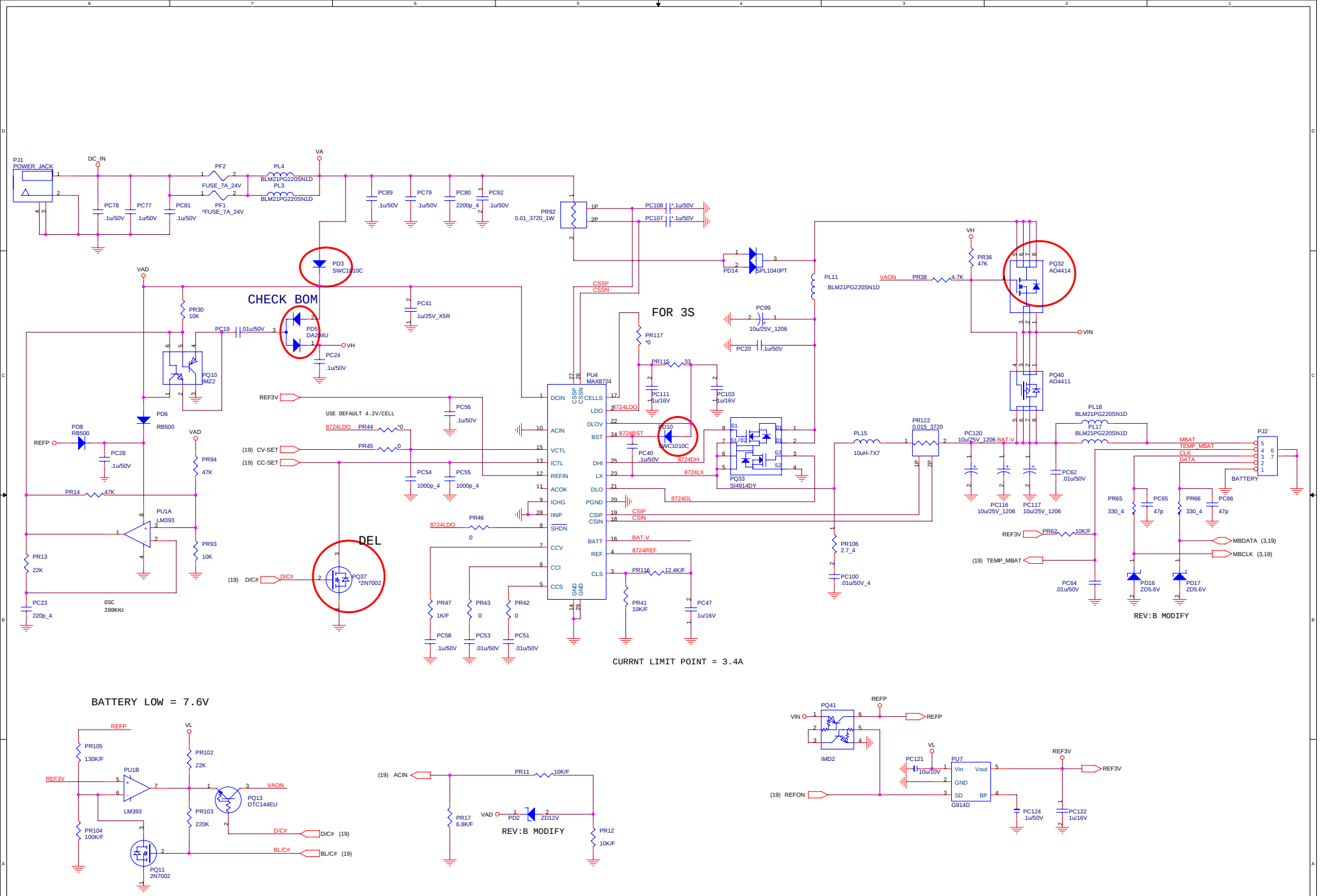

PROJECT : ZM1
Quanta Computer Inc.

Size	Document Number	Rev
	BATTERY CHARGER	2A
Date: Friday, July 08, 2005	Sheet 30 of 30	