QUANTA COMPUTER INC.

(March/31/2003) Rev : E

PAG	Content	PAG	Content
1	Cover Page	31	POWER 12V_HDD & AGP(VDDQ)
2	650 System Block Diagram	32	POWER - DDR & 2.5V
3	SOCKET 478 - 1	33	SYSTEM POWER
4	SOCKET 478 - 2	34	POWER DISCHARGE
5	SOCKET 478 - 3	35	POWER CORE
6	650-1 (Host/AGP)	36	
7	650-2 (Memory for DDR)	37	
8	650-3 (HyperZip/VGA/Misc.)	38	
9	650-4 (Powers)	39	
10	962-1 (PCI/IDE/HyperZip)	40	
11	962-2 (Misc. Signals)	41	
12	962-3 (USB/1394/IPB)	42	
13	962-4 (Powers)	43	
14	Main Clock Generator & BUFFER	44	
15	AGP SLOT	45	
16	CRT,LCD LID,BLON & FAN CONTROL	46	
17	DIMM1 & DIMM2	47	
18	DDR_TERMINASION	48	
19	USB,LED/B,PS2,PW & RST CONN	49	
20	PCI CONN & PULL UP	50	
21	LAN PHY (AC101L) & RJ45,RJ11	51	
22	IDE (HDD & CDROM) & LPT	52	
23	1394(RTL8801B)	53	
24	HOLE,EMI,RTC & COM1	54	
25	SUPER_I/O & BIOS ROM	55	
26	AUDIO CODEC(ALC650)	56	
27	AUDIO AMPLIFIER(LM4873 & 4871)	57	
28	EC W83L950D	58	
29	AUDIO DJ (0Z263)	59	
30	BATTERY CONN & POWER JACK	60	

DT1

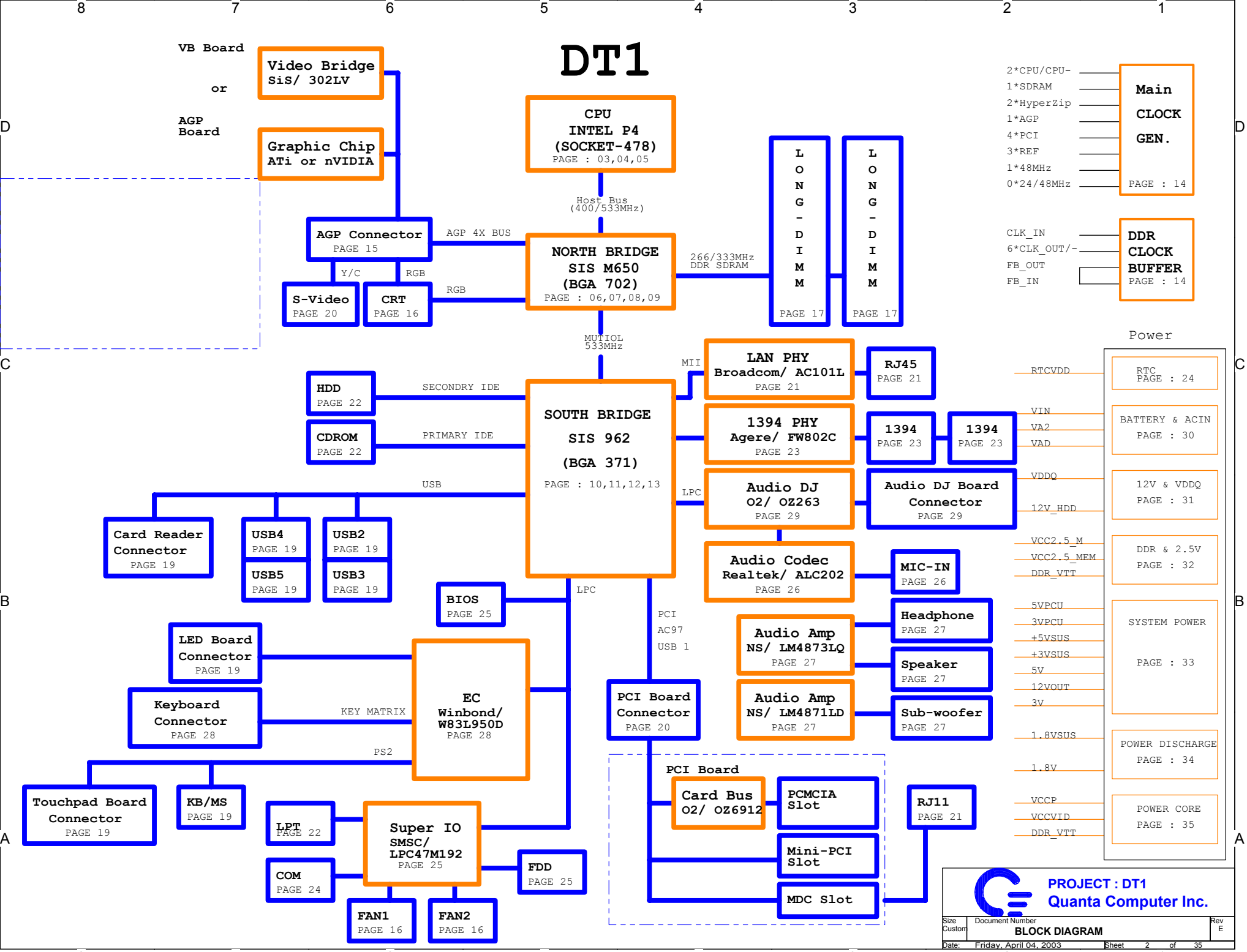
VB Board
or
AGP Board
Video Bridge SiS/ 302LV
Graphic Chip ATi or nVIDIA
CPU INTEL P4 (SOCKET-478) PAGE : 03,04,05
Host Bus (400/533MHz)
AGP Connector PAGE 15
AGP 4X BUS
NORTH BRIDGE SIS M650 (BGA 702) PAGE : 06,07,08,09
Y/C
RGB
S-Video PAGE 20
CRT PAGE 16
RGB
266/333MHz DDR SDRAM
LONG-DIMM PAGE 17
LONG-DIMM PAGE 17
2*CPU/CPU-
1*SDRAM
2*HyperZip
1*AGP
4*PCI
3*REF
1*48MHz
0*24/48MHz
Main CLOCK GEN. PAGE : 14
CLK_IN
6*CLK_OUT/-
FB_OUT
FB_IN
DDR CLOCK BUFFER PAGE : 14
MUTIOL 533MHz
MII
LAN PHY Broadcom/ AC101L PAGE 21
RJ45 PAGE 21
HDD PAGE 22
SECONDRY IDE
CDROM PAGE 22
PRIMARY IDE
SOUTH BRIDGE SIS 962 (BGA 371) PAGE : 10,11,12,13
1394 PHY Agere/ FW802C PAGE 23
1394 PAGE 23
1394 PAGE 23
USB
LPC
Audio DJ O2/ OZ263 PAGE 29
Audio DJ Board Connector PAGE 29
Card Reader Connector PAGE 19
USB4 PAGE 19
USB2 PAGE 19
USB5 PAGE 19
USB3 PAGE 19
Audio Codec Realtek/ ALC202 PAGE 26
MIC-IN PAGE 26
BIOS PAGE 25
LPC
PCI
AC97
USB 1
Headphone PAGE 27
Audio Amp NS/ LM4873LQ PAGE 27
Speaker PAGE 27
Audio Amp NS/ LM4871LD PAGE 27
Sub-woofer PAGE 27
LED Board Connector PAGE 19
EC Winbond/ W83L950D PAGE 28
Keyboard Connector PAGE 28
KEY MATRIX
PS2
PCI Board Connector PAGE 20
PCI Board
Card Bus O2/ OZ6912
PCMCIA Slot
Mini-PCI Slot
MDC Slot
RJ11 PAGE 21
Touchpad Board Connector PAGE 19
KB/MS PAGE 19
LPT PAGE 22
Super IO SMSC/ LPC47M192 PAGE 25
COM PAGE 24
FDD PAGE 25
FAN1 PAGE 16
FAN2 PAGE 16
Power
RTCVDD
RTC PAGE : 24
VIN
VA2
VAD
BATTERY & ACIN PAGE : 30
VDDQ
12V_HDD
12V & VDDQ PAGE : 31
VCC2.5_M
VCC2.5_MEM
DDR_VTT
DDR & 2.5V PAGE : 32
5VPCU
3VPCU
+5VSUS
+3VSUS
5V
12VOUT
3V
SYSTEM POWER PAGE : 33
1.8VSUS
1.8V
POWER DISCHARGE PAGE : 34
VCCP
VCCVID
DDR_VTT
POWER CORE PAGE : 35
PROJECT : DT1
Quanta Computer Inc.
Size Custom
Document Number
BLOCK DIAGRAM
Rev E
Date: Friday, April 04, 2003
Sheet 2 of 35

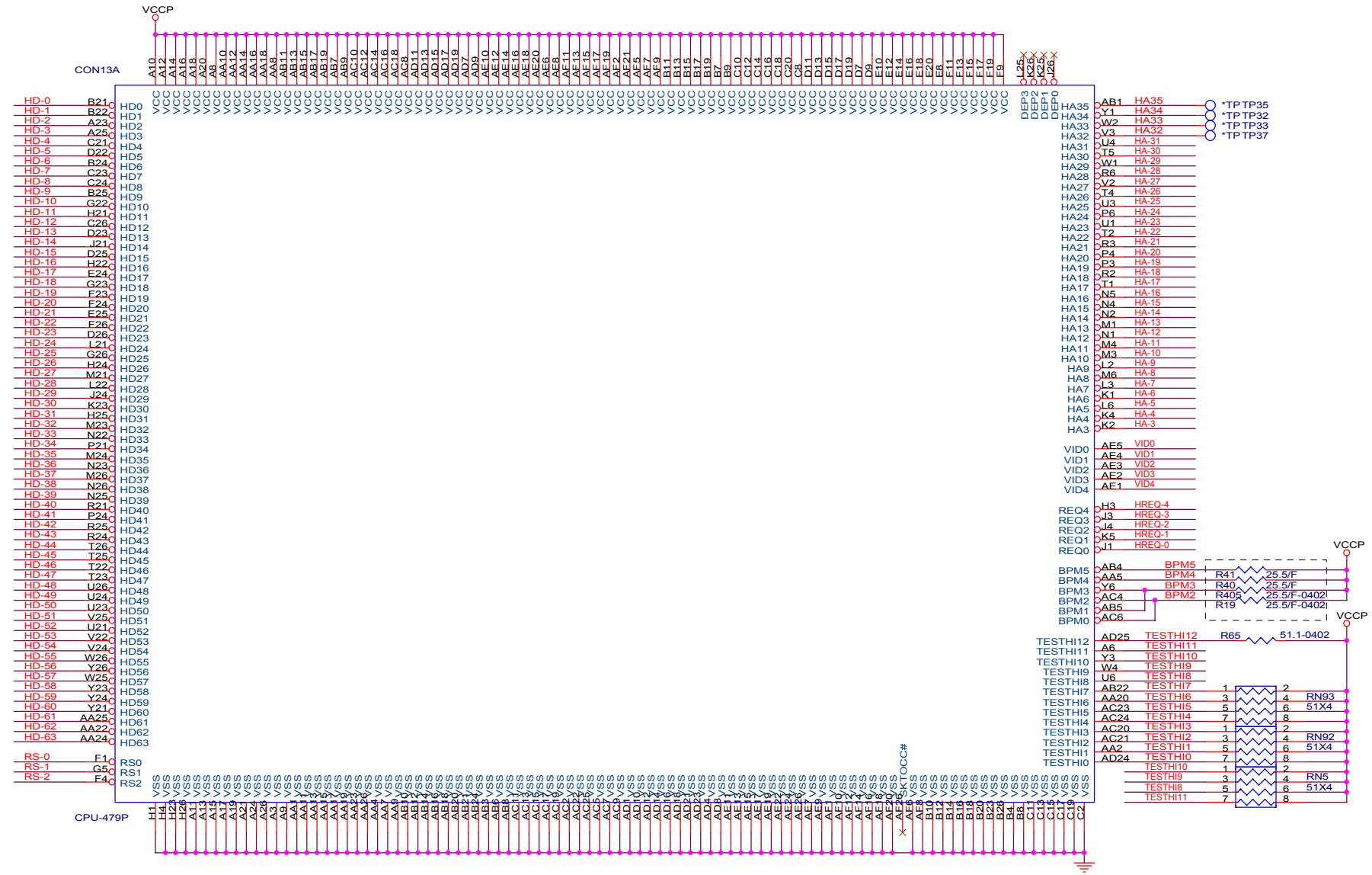

[6] RS-[0..2] — RS-[0..2]
[6] HD-[0..63] — HD-[0..63]
[6] HA-[3..31] — HA-[3..31]
[6] HREQ-[0..4] — HREQ-[0..4]
[35] VID[0..4] — VID[0..4]

PROJECT : DT1
Quanta Computer Inc.

Size	Document Number	Rev
Custom	**SOCKET 478 - 1**	E

Date: Friday, April 04, 2003 Sheet 3 of 35

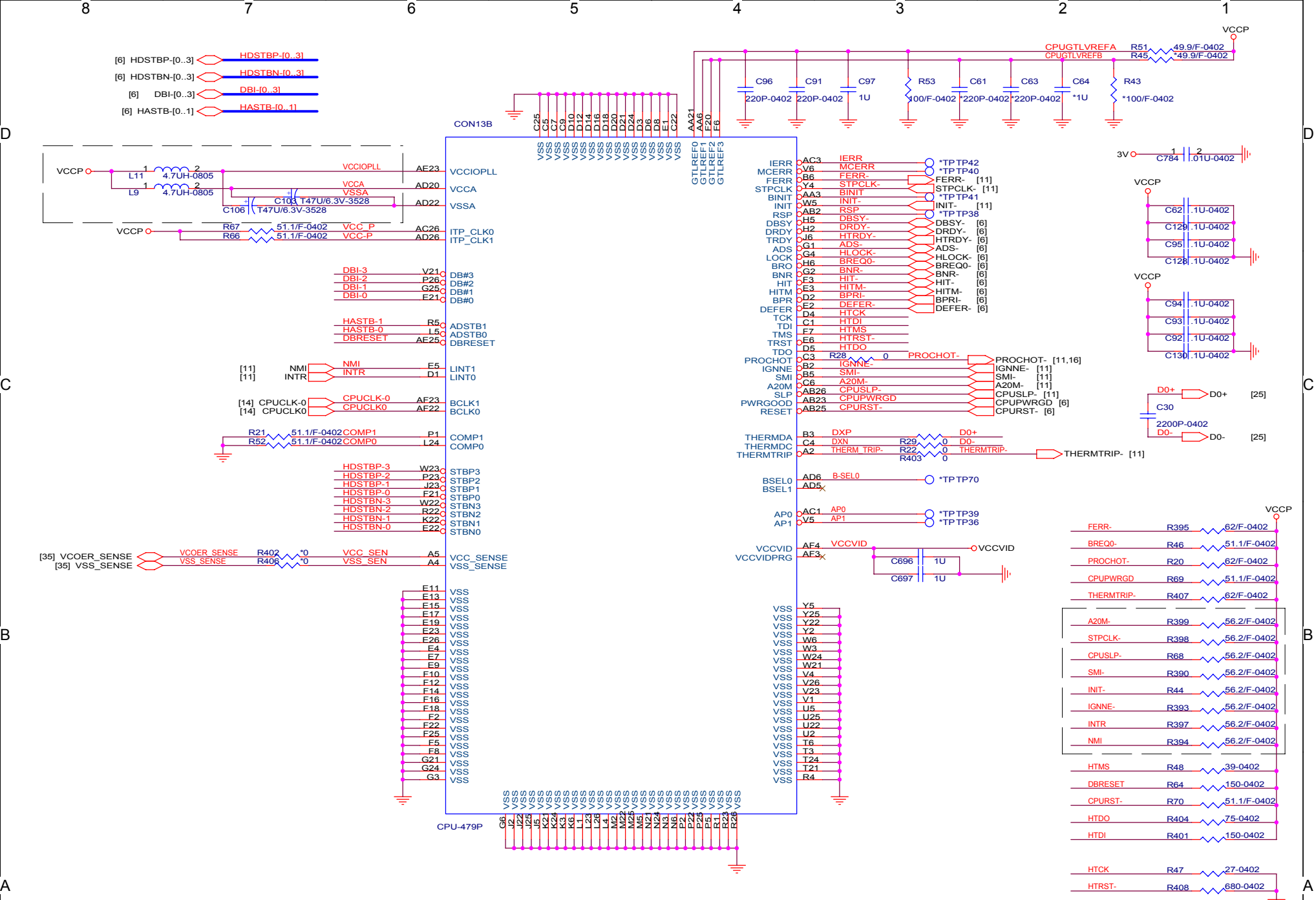

PROJECT : DT1
Quanta Computer Inc.

Size	Document Number	Rev
Custom	SOCKET 478 - 2	E

Date: Friday, April 04, 2003 Sheet 4 of 35

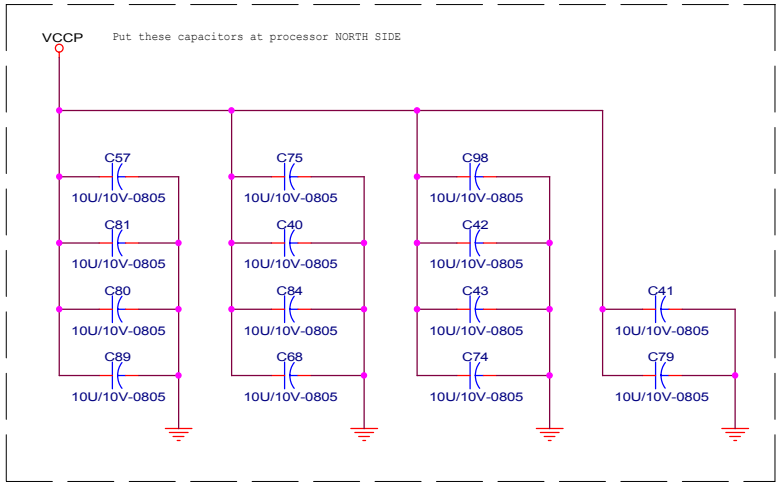

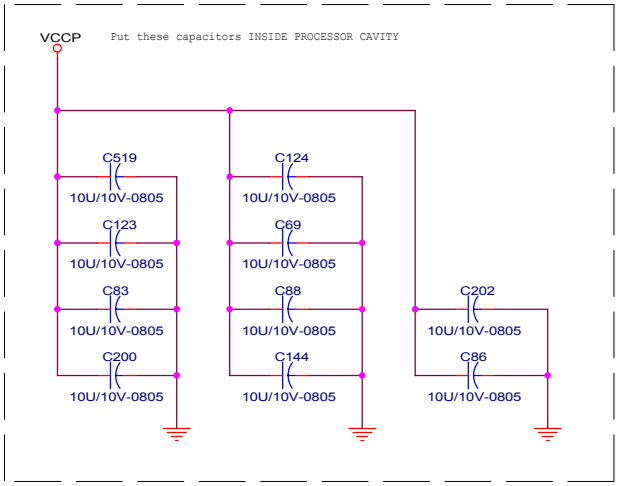

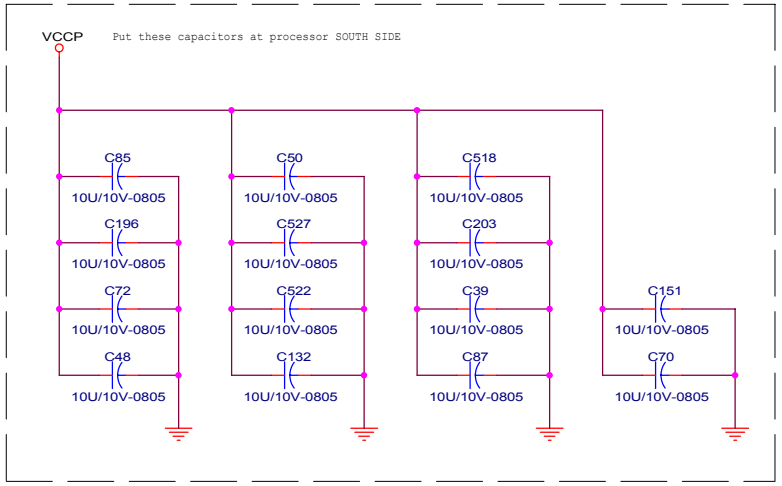

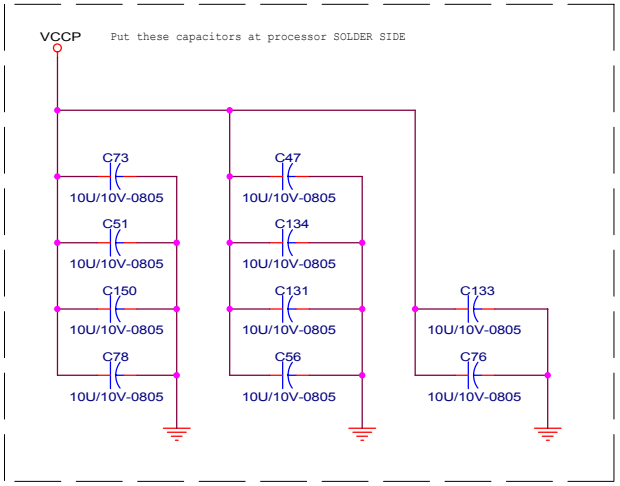

P.S. Choose X7R/X5R components instead of Y5V for all 10uF_1206 capacitors on this page.

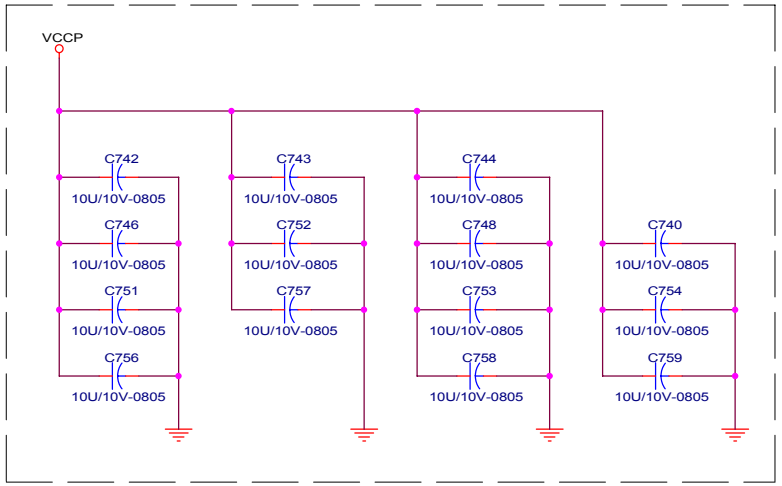

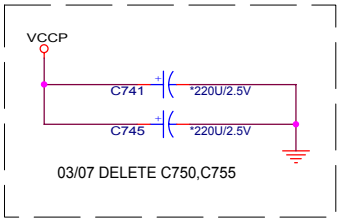

PROJECT : DT1
Quanta Computer Inc.

Size	Document Number	Rev
Custom	SOCKET 478 - 3	E

Date: Friday, April 04, 2003 Sheet 5 of 35

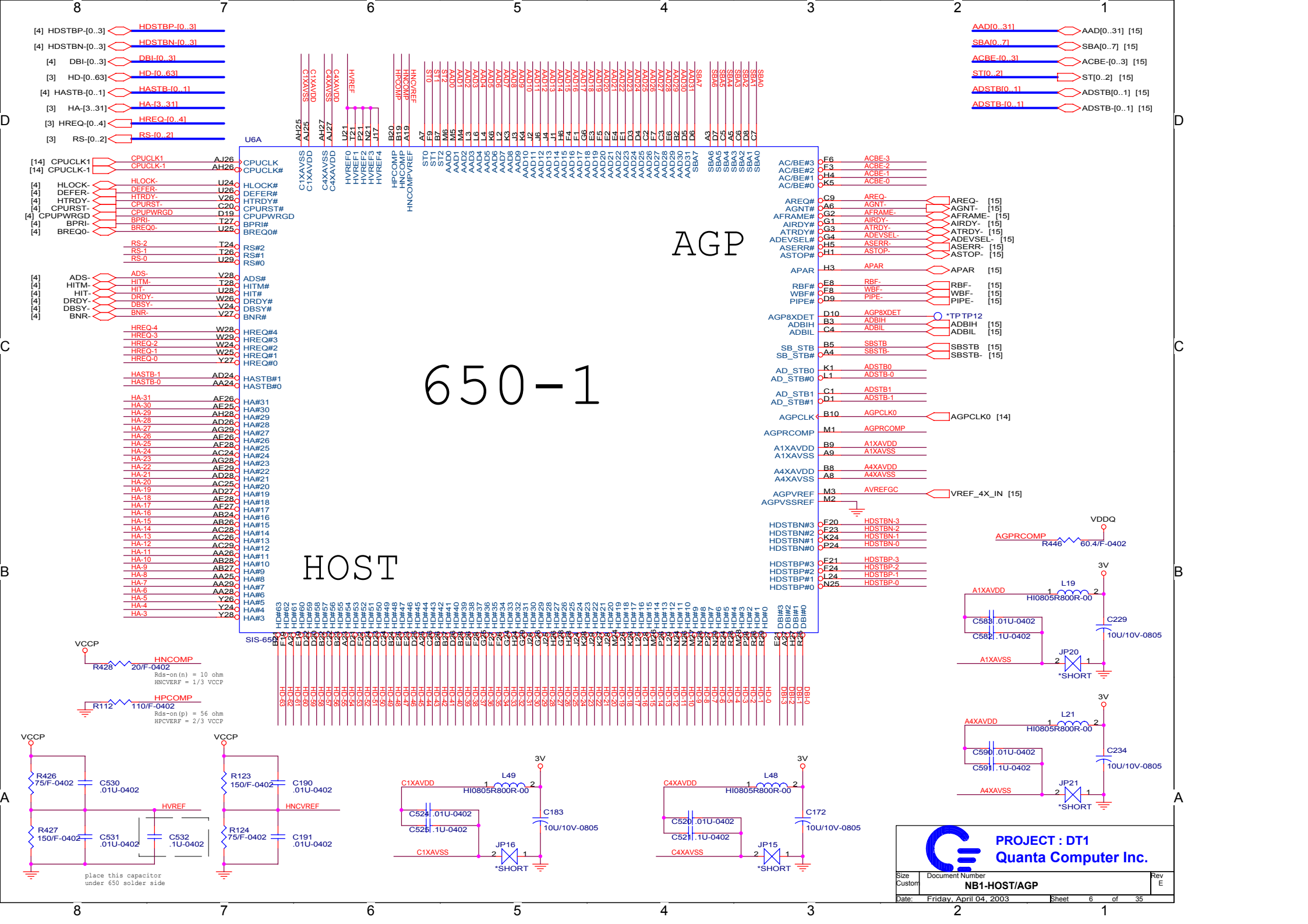
650-1
HOST
AGP
U6A
SIS-650
PROJECT : DT1
Quanta Computer Inc.
NB1-HOST/AGP
Size Custom
Document Number
Rev E
Date: Friday, April 04, 2003
Sheet 6 of 35
VCCP
R428 20/F-0402 HNCOMP
Rds-on(n) = 10 ohm
HNCVERF = 1/3 VCCP
R112 110/F-0402 HPCOMP
Rds-on(p) = 56 ohm
HPCVERF = 2/3 VCCP
R426 75/F-0402 C530 .01U-0402
R427 150/F-0402 C531 .01U-0402 C532 .1U-0402
HVREF
R123 150/F-0402 C190 .01U-0402
R124 75/F-0402 C191 .01U-0402
HNCVREF
place this capacitor under 650 solder side
C1XAVDD L49 HI0805R800R-00 3V
C524 .01U-0402
C525 .1U-0402
C183 10U/10V-0805
C1XAVSS JP16 *SHORT
C4XAVDD L48 HI0805R800R-00 3V
C520 .01U-0402
C521 .1U-0402
C172 10U/10V-0805
C4XAVSS JP15 *SHORT
VDDQ
AGPRCOMP R446 60.4/F-0402
A1XAVDD L19 HI0805R800R-00 3V
C583 .01U-0402
C582 .1U-0402
C229 10U/10V-0805
A1XAVSS JP20 *SHORT
A4XAVDD L21 HI0805R800R-00 3V
C590 .01U-0402
C591 .1U-0402
C234 10U/10V-0805
A4XAVSS JP21 *SHORT
HDSTBP-[0..3]
HDSTBN-[0..3]
DBI-[0..3]
HD-[0..63]
HASTB-[0..1]
HA-[3..31]
HREQ-[0..4]
RS-[0..2]
CPUCLK1
CPUCLK-1
HLOCK-
DEFER-
HTRDY-
CPURST-
CPUPWRGD
BPRI-
BREQ0-
RS-2
RS-1
RS-0
ADS-
HITM-
HIT-
DRDY-
DBSY-
BNR-
HREQ-4
HREQ-3
HREQ-2
HREQ-1
HREQ-0
HASTB-1
HASTB-0
HA-31
HA-30
HA-29
HA-28
HA-27
HA-26
HA-25
HA-24
HA-23
HA-22
HA-21
HA-20
HA-19
HA-18
HA-17
HA-16
HA-15
HA-14
HA-13
HA-12
HA-11
HA-10
HA-9
HA-8
HA-7
HA-6
HA-5
HA-4
HA-3
AAD[0..31]
SBA[0..7]
ACBE-[0..3]
ST[0..2]
ADSTB[0..1]
ADSTB-[0..1]
AC/BE#3
AC/BE#2
AC/BE#1
AC/BE#0
AREQ#
AGNT#
AFRAME#
AIRDY#
ATRDY#
ADEVSEL#
ASERR#
ASTOP#
APAR
RBF#
WBF#
PIPE#
AGP8XDET
ADBIH
ADBIL
SB_STB
SB_STB#
AD_STB0
AD_STB#0
AD_STB1
AD_STB#1
AGPCLK
AGPRCOMP
A1XAVDD
A1XAVSS
A4XAVDD
A4XAVSS
AGPVREF
AGPVSSREF
HDSTBN#3
HDSTBN#2
HDSTBN#1
HDSTBN#0
HDSTBP#3
HDSTBP#2
HDSTBP#1
HDSTBP#0
*TP TP12
VREF_4X_IN [15]
AGPCLK0 [14]

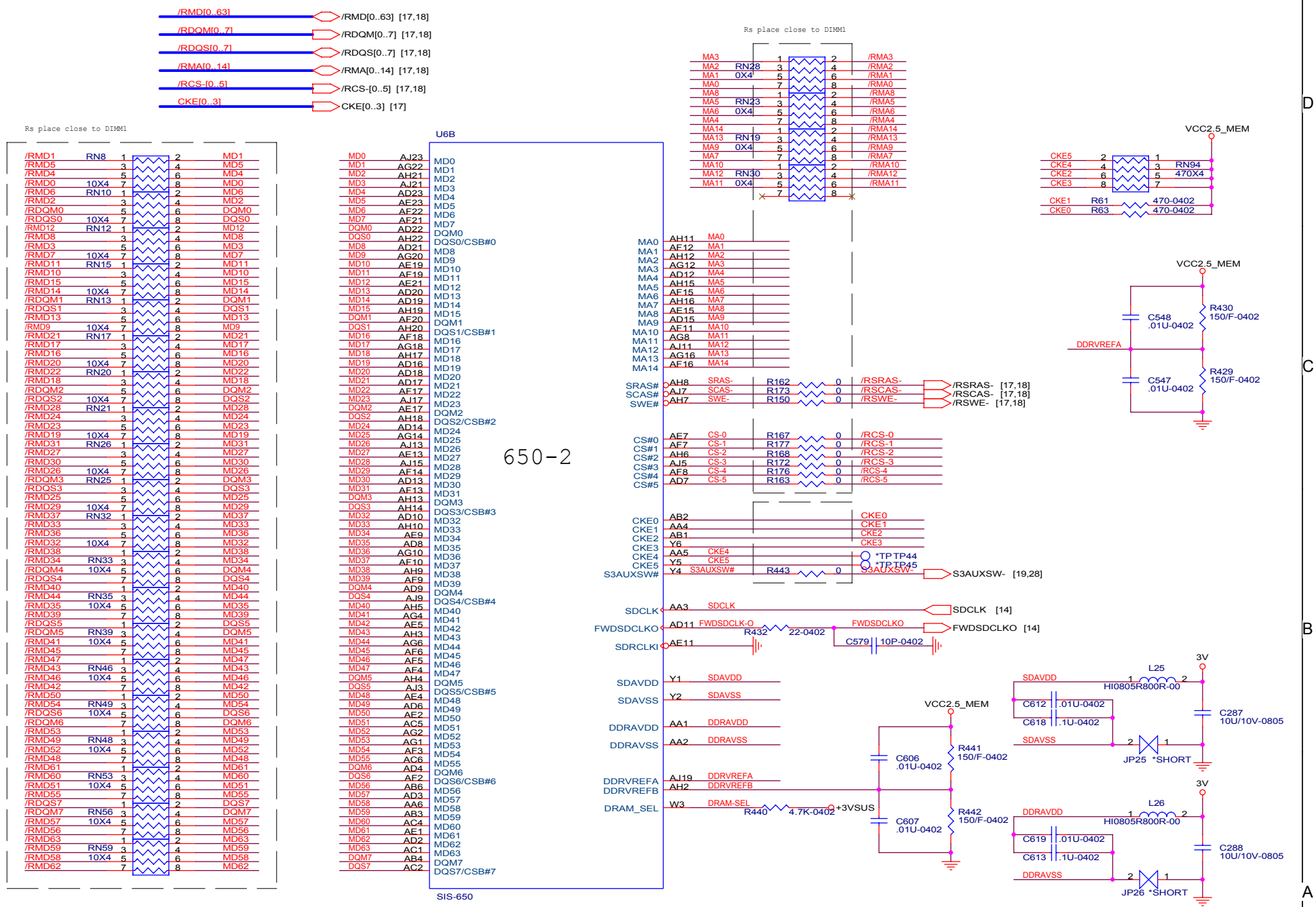
/RMD[0..63]
/RDQM[0..7]
/RDQS[0..7]
/RMA[0..14]
/RCS-[0..5]
CKE[0..3]
/RMD[0..63] [17,18]
/RDQM[0..7] [17,18]
/RDQS[0..7] [17,18]
/RMA[0..14] [17,18]
/RCS-[0..5] [17,18]
CKE[0..3] [17]
Rs place close to DIMM1
U6B
650-2
SIS-650
VCC2.5_MEM
DDRVREFA
/RSRAS- [17,18]
/RSCAS- [17,18]
/RSWE- [17,18]
S3AUXSW- [19,28]
SDCLK [14]
FWDSDCLKO [14]
+3VSUS
3V
JP25 *SHORT
JP26 *SHORT
PROJECT : DT1
Quanta Computer Inc.
Size Custom
Document Number
NB1-MEMORY FOR DDR
Rev E
Date: Friday, April 04, 2003
Sheet 7 of 35

NOTE: This page is for universal PCB design(suitable for both 645 or 650)

NB Hardware Trap Table

	0	1	Default	
DLLEN#	enable PLL	disable PLL	0	embedded pull-low (30~50K Ohm)
DRAM_SEL	SDR	DDR	1(DDR)	yes
TRAP0	normal	NB_debug mode	0	yes
				yes
TRAP1	TV selection, NTSC/PAL(0/1)		0	
CSYNC	enable VB		0	
RSYNC	enable VGA interrupt		1	
LSYNC	enable panel link		0	

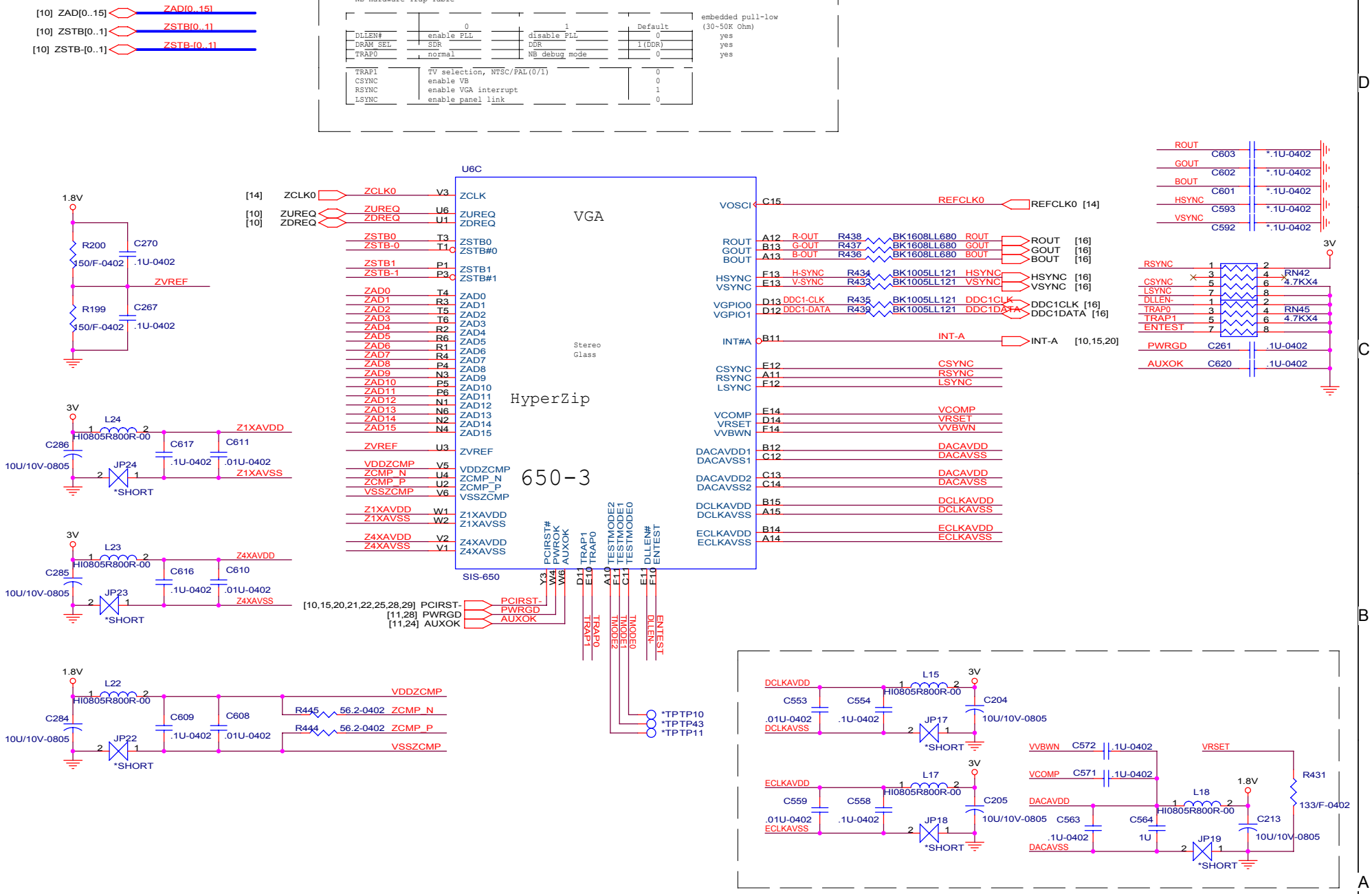

PROJECT : DT1
Quanta Computer Inc.

Size	Document Number	Rev
Custom	NB1-HyperZip/VGA/Misc.	E

Date: Friday, April 04, 2003 Sheet 8 of 35

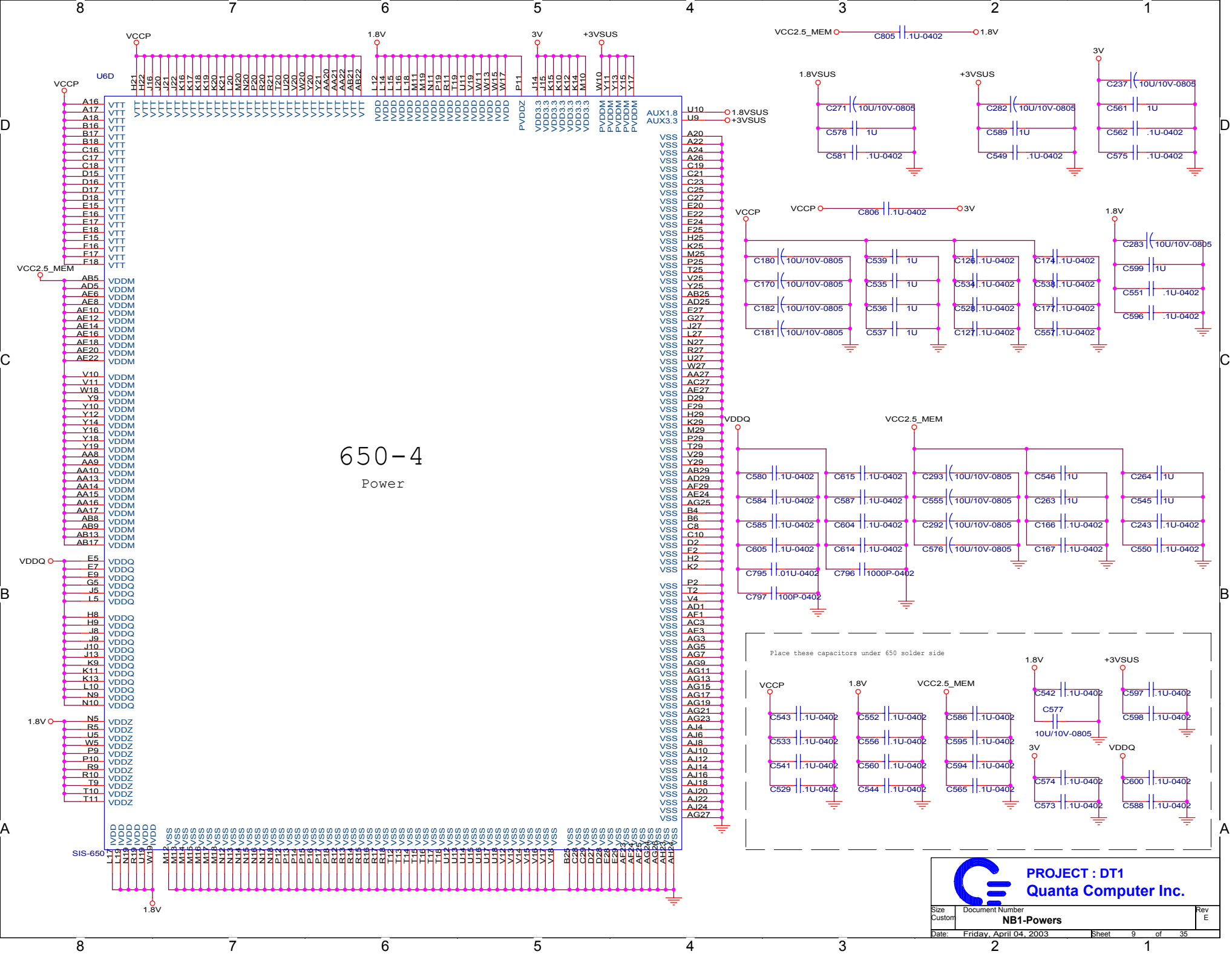
650-4
Power
U6D
SIS-650
VCCP
1.8V
3V
+3VSUS
VCC2.5_MEM
VDDQ
AUX1.8
AUX3.3
Place these capacitors under 650 solder side
PROJECT : DT1
Quanta Computer Inc.
Size
Custom
Document Number
NB1-Powers
Rev
E
Date: Friday, April 04, 2003
Sheet 9 of 35

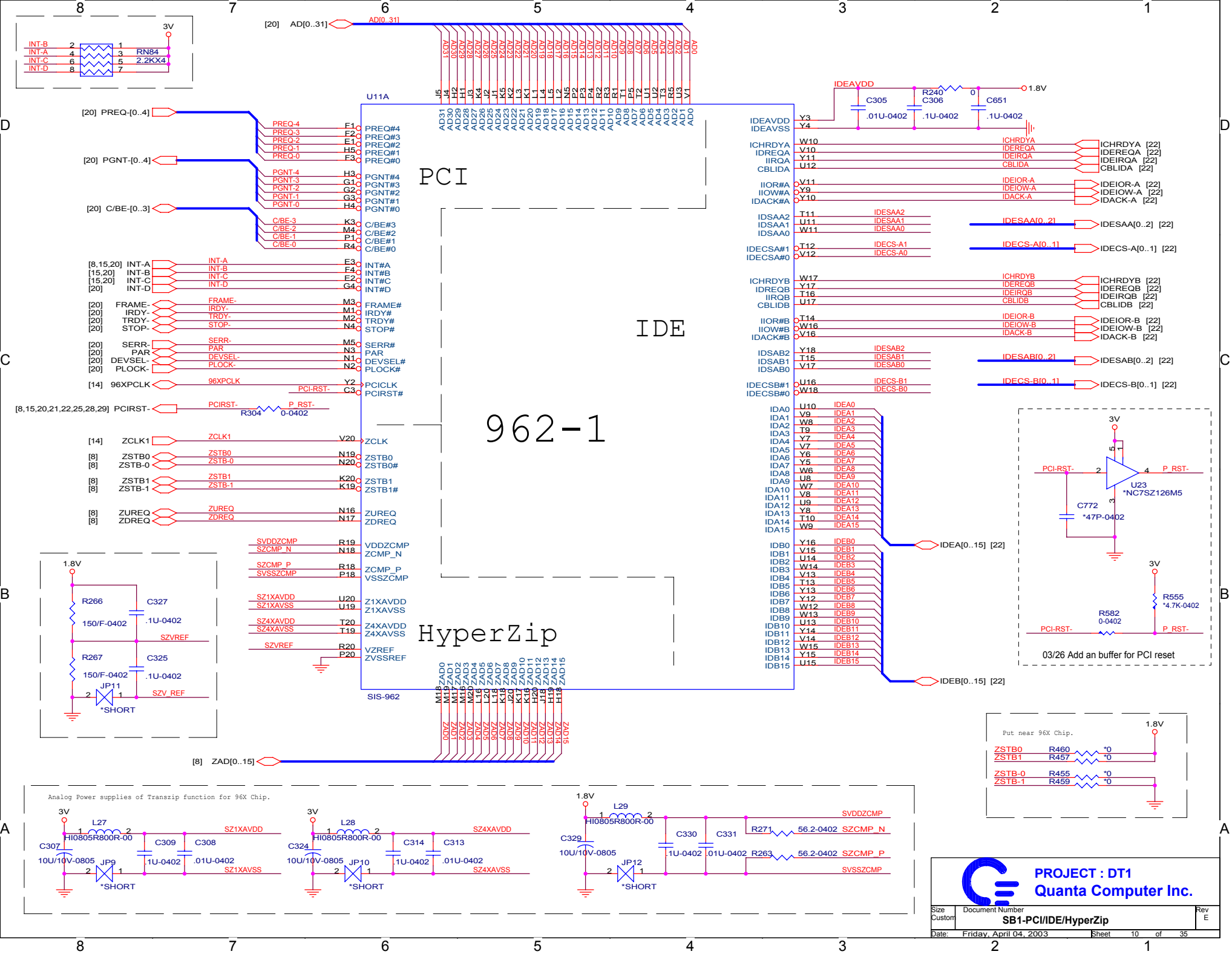
PCI
IDE
962-1
HyperZip
U11A
SIS-962
RN84
2.2KX4
[20] AD[0..31]
[20] PREQ-[0..4]
[20] PGNT-[0..4]
[20] C/BE-[0..3]
[8,15,20] INT-A
[15,20] INT-B
[15,20] INT-C
[20] INT-D
[20] FRAME-
[20] IRDY-
[20] TRDY-
[20] STOP-
[20] SERR-
[20] PAR
[20] DEVSEL-
[20] PLOCK-
[14] 96XPCLK
[8,15,20,21,22,25,28,29] PCIRST-
[14] ZCLK1
[8] ZSTB0
[8] ZSTB-0
[8] ZSTB1
[8] ZSTB-1
[8] ZUREQ
[8] ZDREQ
[8] ZAD[0..15]
IDEAVDD
1.8V
C305 .01U-0402
R240 0
C306 .1U-0402
C651 .1U-0402
ICHRDYA [22]
IDEREQA [22]
IDEIRQA [22]
CBLIDA [22]
IDEIOR-A [22]
IDEIOW-A [22]
IDACK-A [22]
IDESAA[0..2] [22]
IDECS-A[0..1] [22]
ICHRDYB [22]
IDEREQB [22]
IDEIRQB [22]
CBLIDB [22]
IDEIOR-B [22]
IDEIOW-B [22]
IDACK-B [22]
IDESAB[0..2] [22]
IDECS-B[0..1] [22]
IDEA[0..15] [22]
IDEB[0..15] [22]
3V
U23
*NC7SZ126M5
C772
*47P-0402
R555
*4.7K-0402
R582
0-0402
PCI-RST-
P_RST-
03/26 Add an buffer for PCI reset
R266
150/F-0402
C327
.1U-0402
SZVREF
R267
150/F-0402
C325
.1U-0402
JP11
*SHORT
SZV_REF
Put near 96X Chip.
ZSTB0 R460 *0
ZSTB1 R457 *0
ZSTB-0 R455 *0
ZSTB-1 R459 *0
Analog Power supplies of Transzip function for 96X Chip.
L27
HI0805R800R-00
C307
10U/10V-0805
C309 .1U-0402
C308 .01U-0402
JP9
SZ1XAVDD
SZ1XAVSS
L28
HI0805R800R-00
C324
10U/10V-0805
C314 .1U-0402
C313 .01U-0402
JP10
SZ4XAVDD
SZ4XAVSS
L29
HI0805R800R-00
C329
10U/10V-0805
C330 .1U-0402
C331 .01U-0402
JP12
SVDDZCMP
R271 56.2-0402 SZCMP_N
R263 56.2-0402 SZCMP_P
SVSSZCMP
PROJECT : DT1
Quanta Computer Inc.
Size Custom
Document Number
SB1-PCI/IDE/HyperZip
Rev E
Date: Friday, April 04, 2003
Sheet 10 of 35

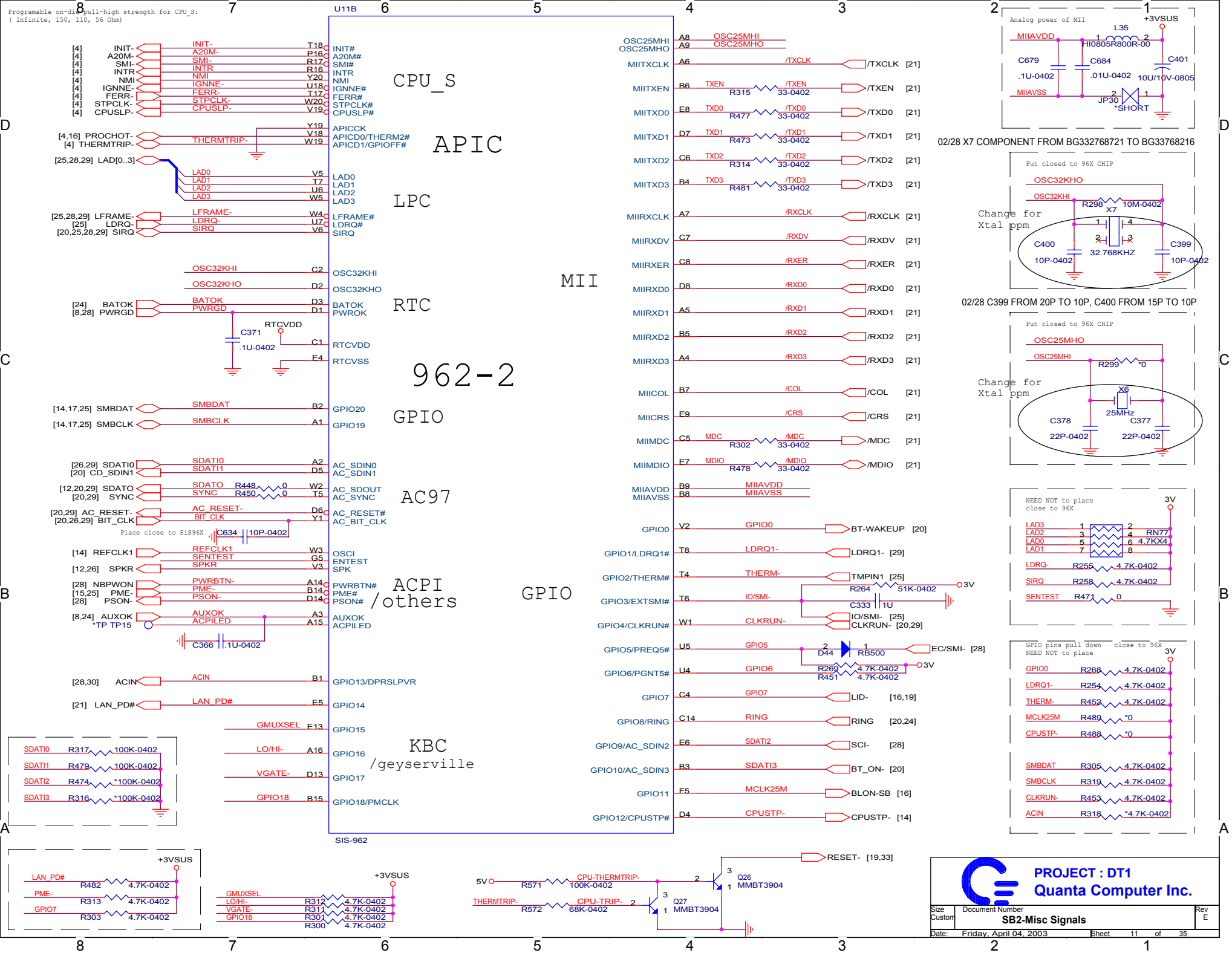
Programable on-die pull-high strength for CPU_S:
(Infinite, 150, 110, 56 Ohm)
U11B
CPU_S
APIC
LPC
RTC
962-2
GPIO
AC97
ACPI
/others
KBC
/geyserville
MII
GPIO
SIS-962
INIT# A20M# SMI# INTR NMI IGNNE# FERR# STPCLK# CPUSLP#
APICCK APICD0/THERM2# APICD1/GPIOFF#
LAD0 LAD1 LAD2 LAD3
LFRAME# LDRQ# SIRQ
OSC32KHI OSC32KHO
BATOK PWROK
RTCVDD RTCVSS
GPIO20 GPIO19
AC_SDIN0 AC_SDIN1 AC_SDOUT AC_SYNC AC_RESET# AC_BIT_CLK
OSCI ENTEST SPK
PWRBTN# PME# PSON#
AUXOK ACPILED
GPIO13/DPRSLPVR
GPIO14 GPIO15 GPIO16 GPIO17 GPIO18/PMCLK
OSC25MHI OSC25MHO
MIITXCLK MIITXEN MIITXD0 MIITXD1 MIITXD2 MIITXD3
MIIRXCLK MIIRXDV MIIRXER MIIRXD0 MIIRXD1 MIIRXD2 MIIRXD3
MIICOL MIICRS MIIMDC MIIMDIO
MIIAVDD MIIAVSS
GPIO0 GPIO1/LDRQ1# GPIO2/THERM# GPIO3/EXTSMI# GPIO4/CLKRUN# GPIO5/PREQ5# GPIO6/PGNT5# GPIO7 GPIO8/RING GPIO9/AC_SDIN2 GPIO10/AC_SDIN3 GPIO11 GPIO12/CPUSTP#
[4] INIT- [4] A20M- [4] SMI- [4] INTR [4] NMI [4] IGNNE- [4] FERR- [4] STPCLK- [4] CPUSLP-
[4,16] PROCHOT- [4] THERMTRIP-
[25,28,29] LAD[0..3]
[25,28,29] LFRAME- [25] LDRQ- [20,25,28,29] SIRQ
[24] BATOK [8,28] PWRGD
[14,17,25] SMBDAT [14,17,25] SMBCLK
[26,29] SDATI0 [20] CD_SDIN1
[12,20,29] SDATO [20,29] SYNC
[20,29] AC_RESET- [20,26,29] BIT_CLK
[14] REFCLK1 [12,26] SPKR
[28] NBPWON [15,25] PME- [28] PSON-
[8,24] AUXOK *TP TP15
[28,30] ACIN
[21] LAN_PD#
GMUXSEL LO/HI- VGATE- GPIO18
SDATI0 R317 100K-0402
SDATI1 R479 100K-0402
SDATI2 R474 *100K-0402
SDATI3 R316 *100K-0402
+3VSUS
LAN_PD# R482 4.7K-0402
PME- R313 4.7K-0402
GPIO7 R303 4.7K-0402
GMUXSEL R312 4.7K-0402
LO/HI- R311 4.7K-0402
VGATE- R301 4.7K-0402
GPIO18 R300 4.7K-0402
5V R571 CPU-THERMTRIP- 100K-0402
THERMTRIP- R572 CPU-TRIP- 68K-0402
Q26 MMBT3904
Q27 MMBT3904
RESET- [19,33]
Analog power of MII
MIIAVDD MIIAVSS
L35 HI0805R800R-00
C679 .1U-0402
C684 .01U-0402
C401 10U/10V-0805
JP30 *SHORT
02/28 X7 COMPONENT FROM BG332768721 TO BG33768216
Put closed to 96X CHIP
OSC32KHO OSC32KHI
R298 10M-0402
X7 32.768KHZ
C400 10P-0402
C399 10P-0402
Change for Xtal ppm
02/28 C399 FROM 20P TO 10P, C400 15P TO 10P
Put closed to 96X CHIP
OSC25MHO OSC25MHI
R299 *0
X6 25MHz
C378 22P-0402
C377 22P-0402
Change for Xtal ppm
NEED NOT to place close to 96X
3V
RN77 4.7KX4
LAD3 LAD2 LAD0 LAD1
LDRQ- R255 4.7K-0402
SIRQ R258 4.7K-0402
SENTEST R471 0
GPIO pins pull down close to 96X
NEED NOT to place
GPIO0 R268 4.7K-0402
LDRQ1- R254 4.7K-0402
THERM- R452 4.7K-0402
MCLK25M R489 *0
CPUSTP- R488 *0
SMBDAT R305 4.7K-0402
SMBCLK R319 4.7K-0402
CLKRUN- R453 4.7K-0402
ACIN R318 *4.7K-0402
PROJECT : DT1
Quanta Computer Inc.
Size Custom
Document Number SB2-Misc Signals
Rev E
Date: Friday, April 04, 2003
Sheet 11 of 35

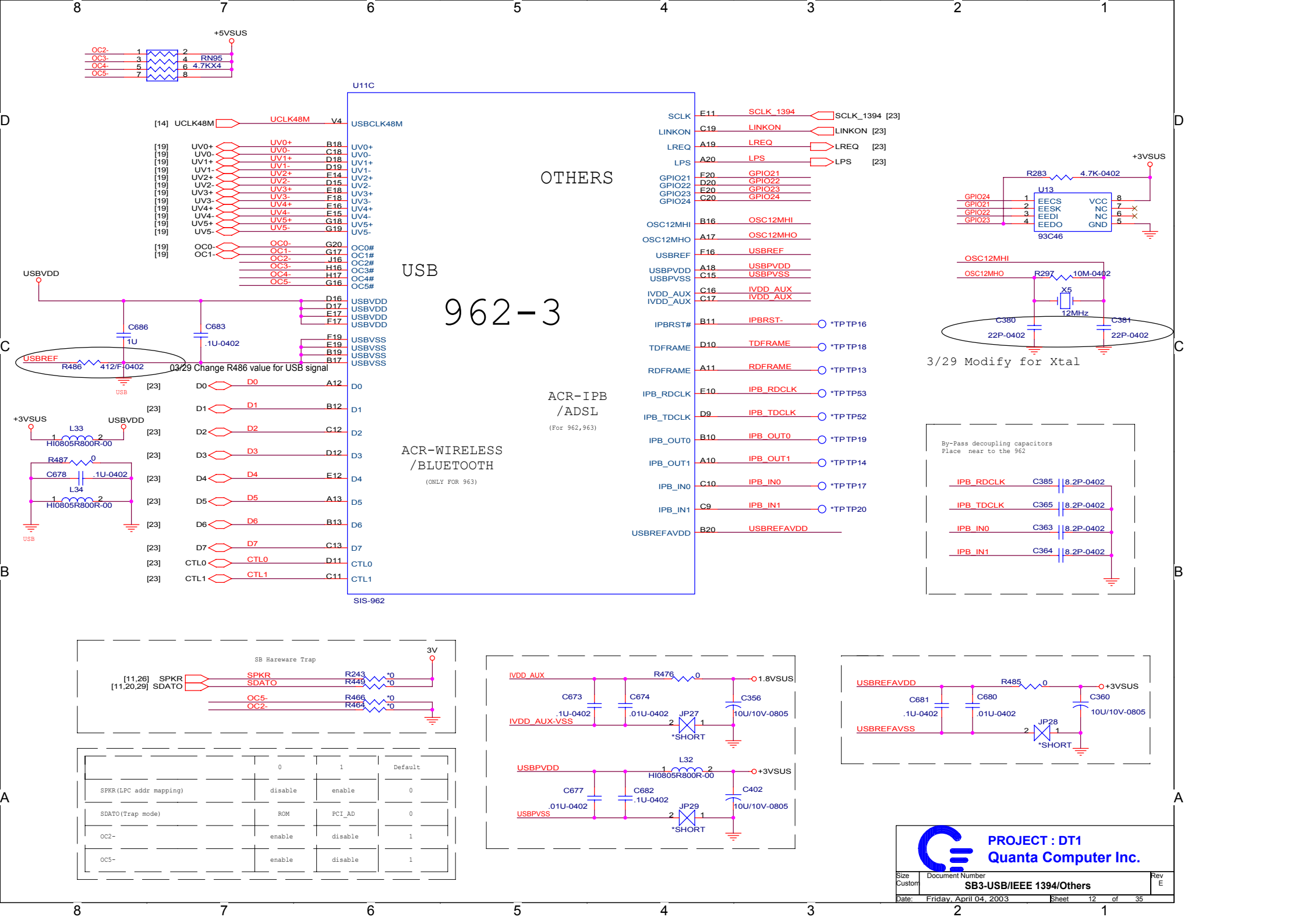

	0	1	Default
SPKR(LPC addr mapping)	disable	enable	0
SDATO(Trap mode)	ROM	PCI_AD	0
OC2-	enable	disable	1
OC5-	enable	disable	1

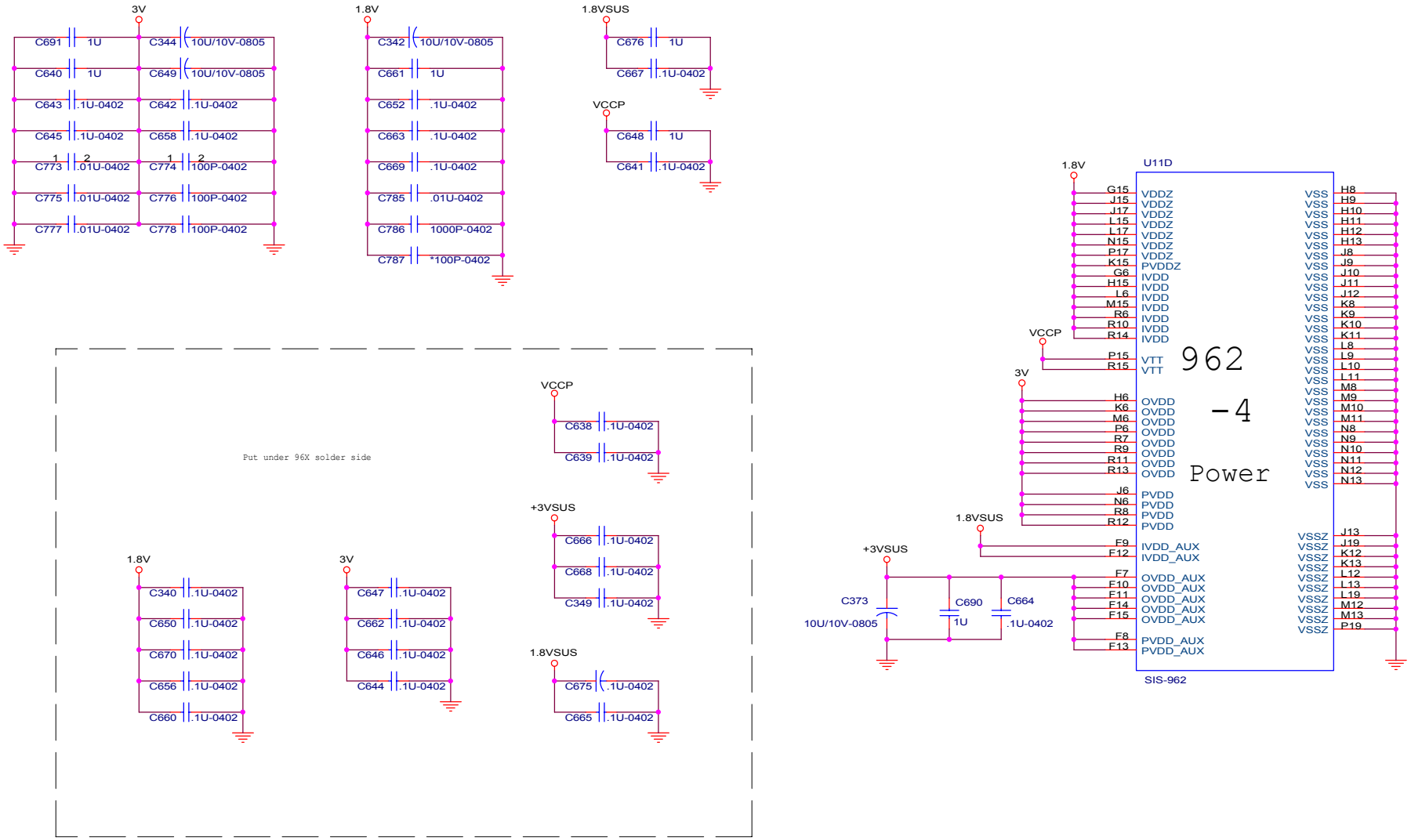

PROJECT : DT1

Quanta Computer Inc.

Size	Document Number	Rev
Custom	**SB4 - Powers**	E

Date: Friday, April 04, 2003 Sheet 13 of 35

MAIN CLOCK GENERATOR

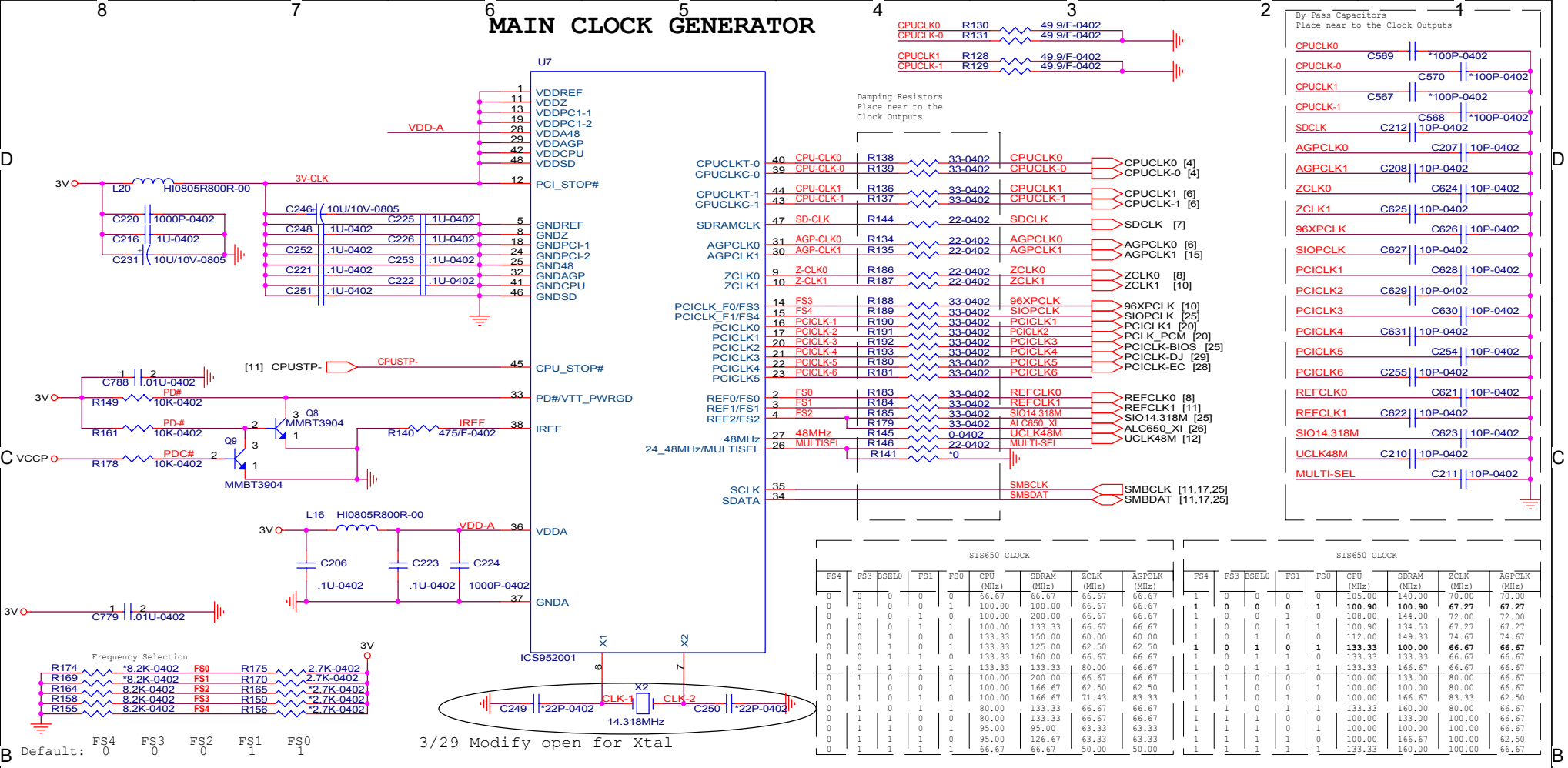

CLOCK BUFFER

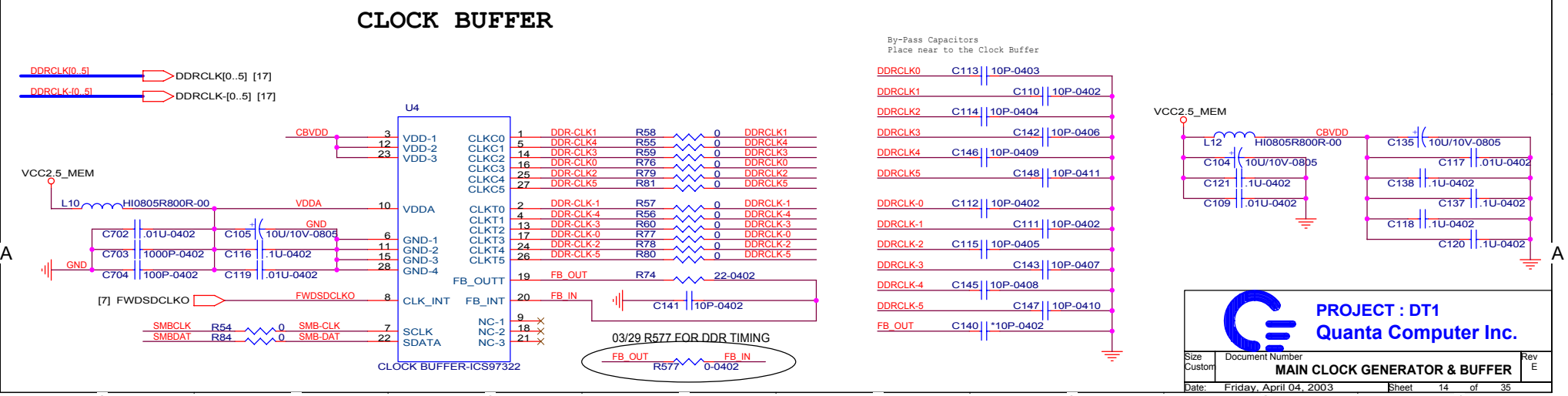

PROJECT : DT1
Quanta Computer Inc.

Size	Document Number	Rev
Custom	MAIN CLOCK GENERATOR & BUFFER	E

Date: Friday, April 04, 2003 Sheet 14 of 35

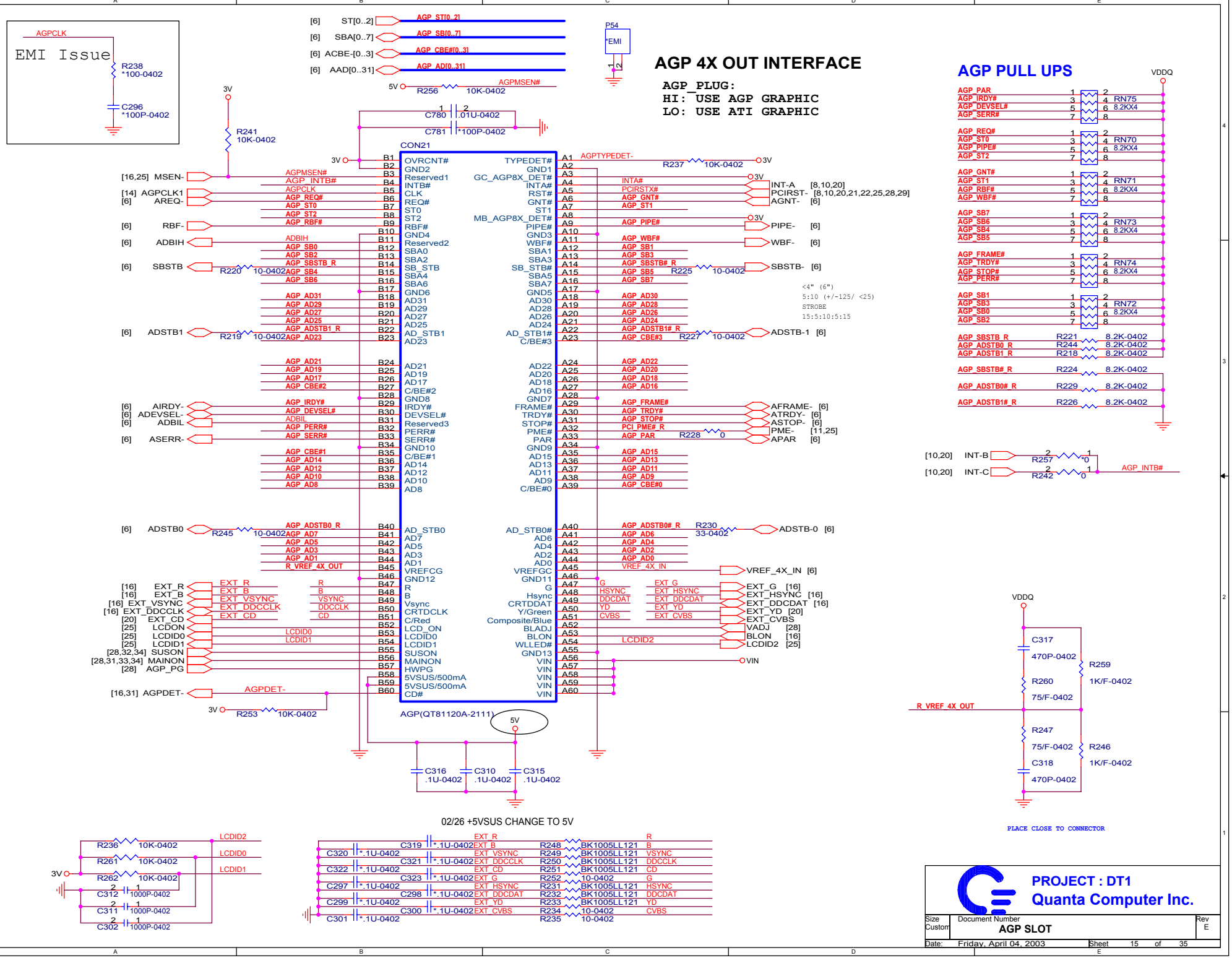
EMI Issue
AGPCLK
R238 *100-0402
C296 *100P-0402
[6] ST[0..2] AGP_ST[0..2]
[6] SBA[0..7] AGP_SB[0..7]
[6] ACBE-[0..3] AGP_CBE#[0..3]
[6] AAD[0..31] AGP_AD[0..31]
P54 *EMI
AGP 4X OUT INTERFACE
AGP_PLUG:
HI: USE AGP GRAPHIC
LO: USE ATI GRAPHIC
AGP PULL UPS
VDDQ
5V R256 10K-0402 AGPMSEN#
3V R241 10K-0402
C780 .01U-0402
C781 *100P-0402
CON21
OVRCNT# GND2 Reserved1 INT#A CLK REQ# ST0 ST2 RBF# GND4 Reserved2 SBA0 SBA2 SB_STB SBA4 SBA6 GND6 AD31 AD29 AD27 AD25 AD_STB1 AD23
AD21 AD19 AD17 C/BE#2 GND8 IRDY# DEVSEL# Reserved3 PERR# SERR# GND10 C/BE#1 AD14 AD12 AD10 AD8
AD_STB0 AD7 AD5 AD3 AD1 VREFCG GND12 R B Vsync CRTDCLK C/Red LCD_ON LCDID0 LCDID1 SUSON MAINON HWPG 5VSUS/500mA 5VSUS/500mA CD#
TYPEDET# GND1 GC_AGP8X_DET# INT#A RST# GNT# ST1 MB_AGP8X_DET# PIPE# GND3 WBF# SBA1 SBA3 SB_STB# SBA5 SBA7 GND5 AD30 AD28 AD26 AD24 AD_STB1# C/BE#3
AD22 AD20 AD18 AD16 GND7 FRAME# TRDY# STOP# PME# PAR GND9 AD15 AD13 AD11 AD9 C/BE#0
AD_STB0# AD6 AD4 AD2 AD0 VREFGC GND11 G Hsync CRTDDAT Y/Green Composite/Blue BLADJ BLON WLED# GND13 VIN VIN VIN VIN VIN
AGP(QT81120A-2111)
5V
C316 .1U-0402 C310 .1U-0402 C315 .1U-0402
[16,25] MSEN-
[14] AGPCLK1
[6] AREQ-
[6] RBF-
[6] ADBIH
[6] SBSTB R220 10-0402
[6] ADSTB1 R219 10-0402
[6] AIRDY-
[6] ADEVSEL-
[6] ADBIL
[6] ASERR-
[6] ADSTB0 R245 10-0402
[16] EXT_R
[16] EXT_B
[16] EXT_VSYNC
[16] EXT_DDCCLK
[20] EXT_CD
[25] LCDON
[25] LCDID0
[25] LCDID1
[28,32,34] SUSON
[28,31,33,34] MAINON
[28] AGP_PG
[16,31] AGPDET-
3V R253 10-0402
AGPTYPEDET- R237 10-0402 3V
INTA# PCIRSTX# AGP_GNT# AGP_ST1
INT-A [8,10,20]
PCIRST- [8,10,20,21,22,25,28,29]
AGNT- [6]
AGP_PIPE# PIPE- [6]
AGP_WBF# WBF- [6]
AGP_SB1 AGP_SB3 AGP_SBSTB# R R225 10-0402 SBSTB- [6]
AGP_SB5 AGP_SB7
<4" (6")
5:10 (+/-125/ <25)
STROBE
15:5:10:5:15
AGP_AD30 AGP_AD28 AGP_AD26 AGP_AD24 AGP_ADSTB1# R AGP_CBE#3 R227 10-0402 ADSTB-1 [6]
AGP_AD22 AGP_AD20 AGP_AD18 AGP_AD16
AGP_FRAME# AFRAME- [6]
AGP_TRDY# ATRDY- [6]
AGP_STOP# ASTOP- [6]
PCI_PME#_R PME- [11,25]
AGP_PAR R228 0 APAR [6]
AGP_AD15 AGP_AD13 AGP_AD11 AGP_AD9 AGP_CBE#0
AGP_ADSTB0# R R230 33-0402 ADSTB-0 [6]
AGP_AD6 AGP_AD4 AGP_AD2 AGP_AD0
VREF_4X_IN VREF_4X_IN [6]
EXT_G EXT_HSYNC EXT_DDCDAT EXT_YD EXT_CVBS
EXT_G [16]
EXT_HSYNC [16]
EXT_DDCDAT [16]
EXT_YD [20]
EXT_CVBS
VADJ [28]
BLON [16]
LCDID2 [25]
LCDID2
VIN
AGP_PAR AGP_IRDY# AGP_DEVSEL# AGP_SERR# RN75 8.2KX4
AGP_REQ# AGP_ST0 AGP_PIPE# AGP_ST2 RN70 8.2KX4
AGP_GNT# AGP_ST1 AGP_RBF# AGP_WBF# RN71 8.2KX4
AGP_SB7 AGP_SB6 AGP_SB4 AGP_SB5 RN73 8.2KX4
AGP_FRAME# AGP_TRDY# AGP_STOP# AGP_PERR# RN74 8.2KX4
AGP_SB1 AGP_SB3 AGP_SB0 AGP_SB2 RN72 8.2KX4
AGP_SBSTB_R R221 8.2K-0402
AGP_ADSTB0_R R244 8.2K-0402
AGP_ADSTB1_R R218 8.2K-0402
AGP_SBSTB# R R224 8.2K-0402
AGP_ADSTB0# R R229 8.2K-0402
AGP_ADSTB1# R R226 8.2K-0402
[10,20] INT-B R257 0
[10,20] INT-C R242 0
AGP_INTB#
VDDQ
C317 470P-0402
R259 1K/F-0402
R260 75/F-0402
R_VREF_4X_OUT
R247 75/F-0402
R246 1K/F-0402
C318 470P-0402
PLACE CLOSE TO CONNECTOR
02/26 +5VSUS CHANGE TO 5V
R236 10K-0402 LCDID2
R261 10K-0402 LCDID0
R262 10K-0402 LCDID1
C312 1000P-0402
C311 1000P-0402
C302 1000P-0402
C319 *.1U-0402 EXT_R R248 BK1005LL121 R
C320 *.1U-0402 C321 *.1U-0402 EXT_B R249 BK1005LL121 B
C322 *.1U-0402 C323 *.1U-0402 EXT_VSYNC R250 BK1005LL121 VSYNC
C297 *.1U-0402 C298 *.1U-0402 EXT_DDCCLK R251 BK1005LL121 DDCCLK
C299 *.1U-0402 C300 *.1U-0402 EXT_CD R252 10-0402 CD
C301 *.1U-0402 EXT_G R231 BK1005LL121 G
EXT_HSYNC R232 BK1005LL121 HSYNC
EXT_DDCDAT R233 BK1005LL121 DDCDAT
EXT_YD R234 10-0402 YD
EXT_CVBS R235 10-0402 CVBS
PROJECT : DT1
Quanta Computer Inc.
Size Custom
Document Number AGP SLOT
Rev E
Date: Friday, April 04, 2003
Sheet 15 of 35

CRT

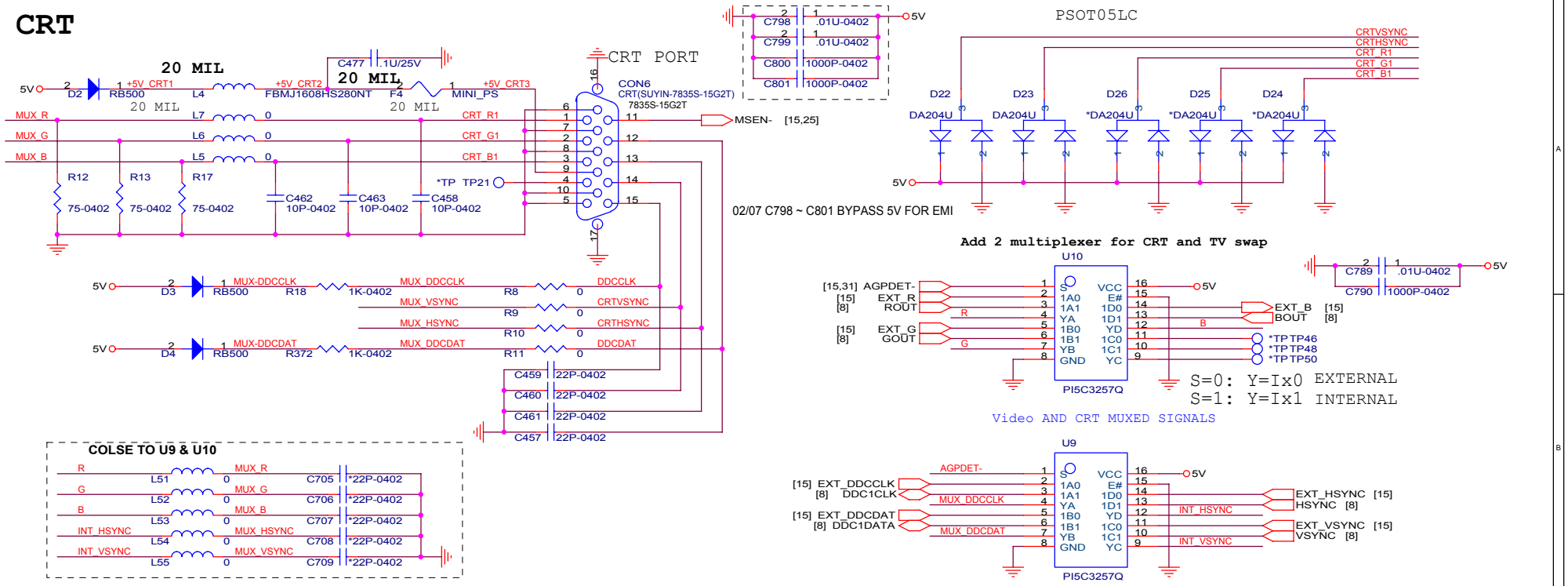

FAN Control

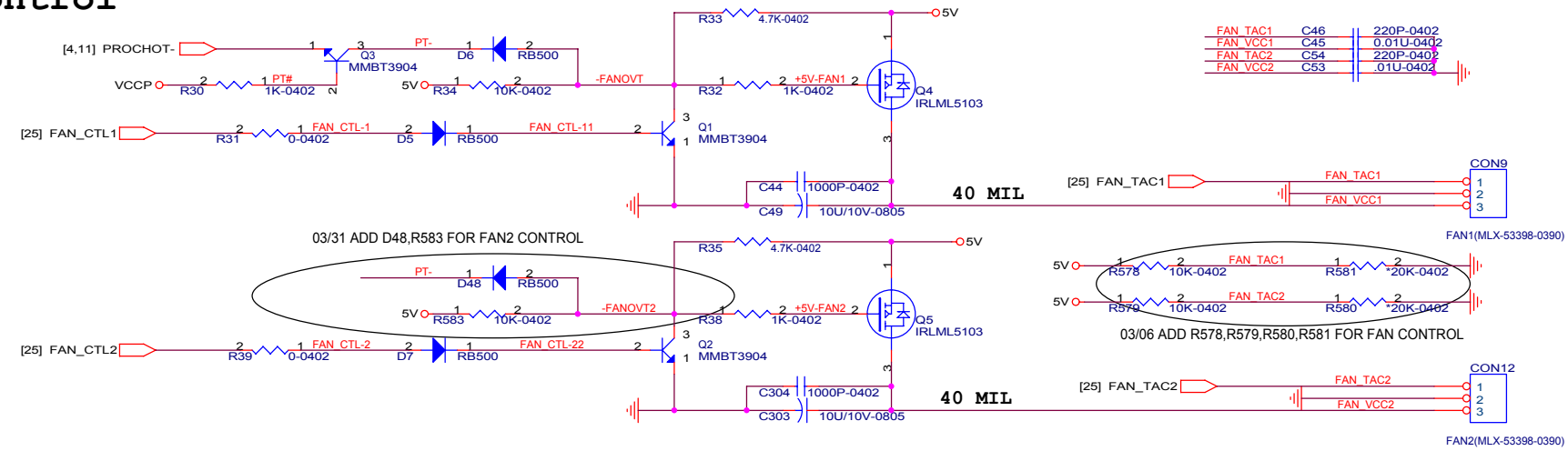

LCD-LID

LID SWITCH SIGNAL

PROJECT : DT1
Quanta Computer Inc.

Size	Document Number	Rev
Custom	CRT,LCD LID,BLON & FAN CONTROL	E

Date: Friday, April 04, 2003 Sheet 16 of 35

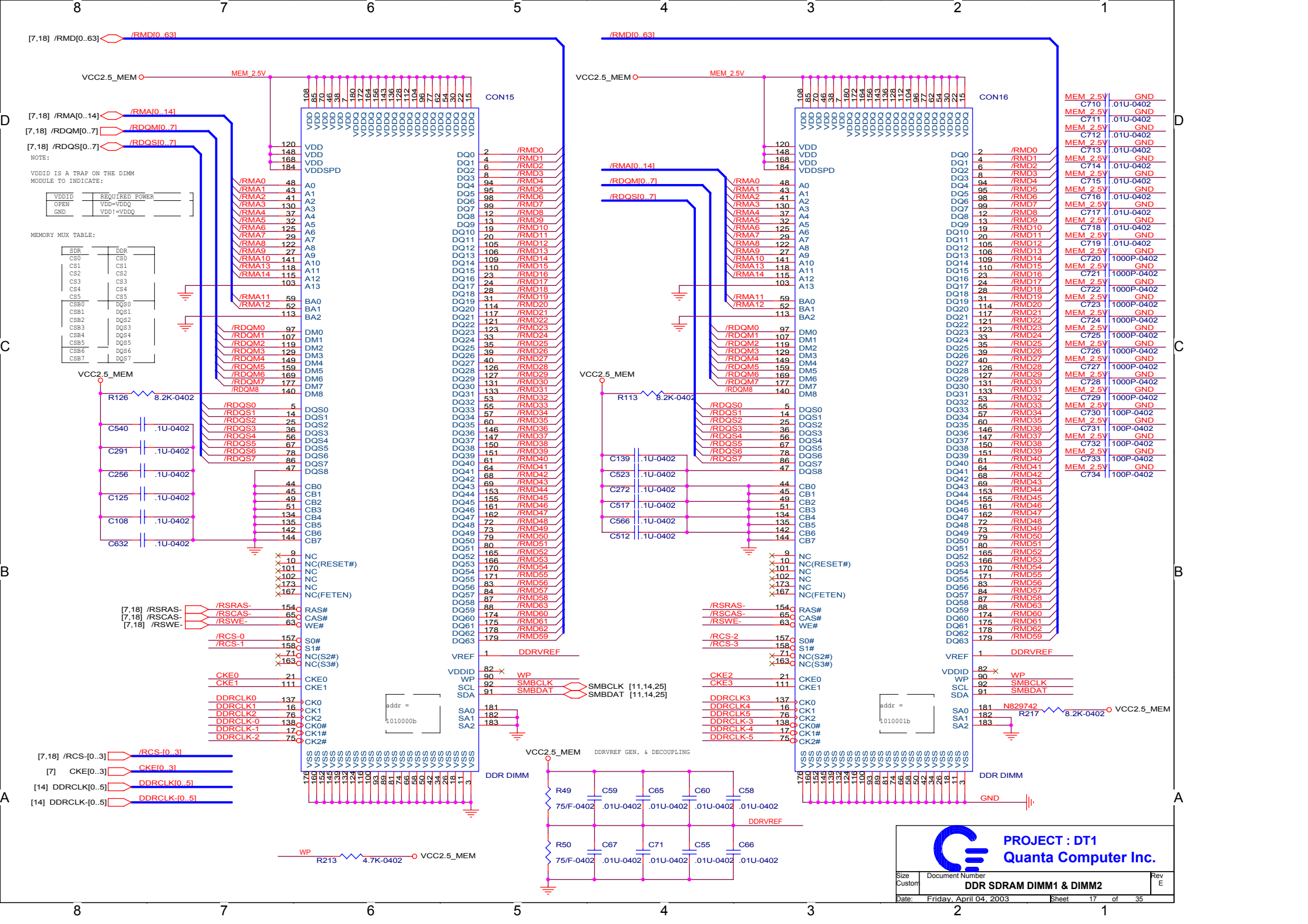
CON15
CON16
DDR DIMM
VCC2.5_MEM
MEM_2.5V
[7,18] /RMD[0..63]
[7,18] /RMA[0..14]
[7,18] /RDQM[0..7]
[7,18] /RDQS[0..7]
NOTE:
VDDID IS A TRAP ON THE DIMM MODULE TO INDICATE:
VDDID | REQUIRED POWER
OPEN | VDD=VDDQ
GND | VDD!=VDDQ
MEMORY MUX TABLE:
SDR | DDR
CS0 | CS0
CS1 | CS1
CS2 | CS2
CS3 | CS3
CS4 | CS4
CS5 | CS5
CSB0 | DQS0
CSB1 | DQS1
CSB2 | DQS2
CSB3 | DQS3
CSB4 | DQS4
CSB5 | DQS5
CSB6 | DQS6
CSB7 | DQS7
R126 8.2K-0402
C540 .1U-0402
C291 .1U-0402
C256 .1U-0402
C125 .1U-0402
C108 .1U-0402
C632 .1U-0402
R113 8.2K-0402
C139 .1U-0402
C523 .1U-0402
C272 .1U-0402
C517 .1U-0402
C566 .1U-0402
C512 .1U-0402
[7,18] /RSRAS-
[7,18] /RSCAS-
[7,18] /RSWE-
/RCS-0
/RCS-1
/RCS-2
/RCS-3
CKE0
CKE1
CKE2
CKE3
DDRCLK0
DDRCLK1
DDRCLK2
DDRCLK-0
DDRCLK-1
DDRCLK-2
DDRCLK3
DDRCLK4
DDRCLK5
DDRCLK-3
DDRCLK-4
DDRCLK-5
DDRVREF
WP
SMBCLK
SMBDAT
SMBCLK [11,14,25]
SMBDAT [11,14,25]
addr = 1010000b
addr = 1010001b
N829742
R217 8.2K-0402
[7,18] /RCS-[0..3]
[7] CKE[0..3]
[14] DDRCLK[0..5]
[14] DDRCLK-[0..5]
VCC2.5_MEM DDRVREF GEN. & DECOUPLING
R49 75/F-0402
C59 .01U-0402
C65 .01U-0402
C60 .01U-0402
C58 .01U-0402
R50 75/F-0402
C67 .01U-0402
C71 .01U-0402
C55 .01U-0402
C66 .01U-0402
R213 4.7K-0402
GND
C710 .01U-0402
C711 .01U-0402
C712 .01U-0402
C713 .01U-0402
C714 .01U-0402
C715 .01U-0402
C716 .01U-0402
C717 .01U-0402
C718 .01U-0402
C719 .01U-0402
C720 1000P-0402
C721 1000P-0402
C722 1000P-0402
C723 1000P-0402
C724 1000P-0402
C725 1000P-0402
C726 1000P-0402
C727 1000P-0402
C728 1000P-0402
C729 1000P-0402
C730 100P-0402
C731 100P-0402
C732 100P-0402
C733 100P-0402
C734 100P-0402
PROJECT : DT1
Quanta Computer Inc.
Size Custom
Document Number
DDR SDRAM DIMM1 & DIMM2
Rev E
Date: Friday, April 04, 2003
Sheet 17 of 35

SSTL-2 Termination Resistors

	SDR	Rs	DDR	Rs	Rtt
MD/DQM(/DQS)	LV-CMOS	0/10/-	SSTL-2	10	33
MA/Control	LV-CMOS	10	SSTL-2	0	33
CS	LV-CMOS	0	SSTL-2	0	47
CKE	OD 3.3V		OD 2.5V		

/RMD[0..63] — /RMD[0..63] [7,17]
/RDQM[0..7] — /RDQM[0..7] [7,17]
/RDQS[0..7] — /RDQS[0..7] [7,17]
/RMA[0..14] — /RMA[0..14] [7,17]
/RCS-[0..5] — /RCS-[0..5] [7,17]

01/07 MEMORY TERMINATIO PIN SWAP

DDR_VTT

/RMD0, /RMD4, /RMD5, /RMD1	RN6	33X4	
/RDQS0, /RDQM0, /RMD2, /RMD6	RN7	33X4	
/RMD7, /RMD3, /RMD8, /RMD9	RN9	33X4	
/RMD12, /RMD13, /RDQS1, /RDQM1	RN11	33X4	
/RMD14, /RMD10, /RMD15, /RMD11	RN14	33X4	
/RDQS2, /RDQM2, /RMD18, /RMD22	RN18	33X4	
/RMD20, /RMD16, /RMD17, /RMD21	RN16	33X4	
/RMD19, /RMD23, /RMD24, /RMD28	RN22	33X4	
/RMD30, /RMD26, /RMD27, /RMD31	RN27	33X4	
/RMD25, /RMD29, /RDQS3, /RDQM3	RN24	33X4	
/RMD32, /RMD36, /RMD33, /RMD37	RN29	33X4	
/RDQS4, /RDQM4, /RMD34, /RMD38	RN31	33X4	
/RMD39, /RMD35, /RMD44, /RMD40	RN34	33X4	
/RMD43, /RMD47, /RMD52, /RMD53	RN47	33X4	
/RMD48, /RMD49, /RDQM6, /RDQS6	RN51	33X4	
/RMD54, /RMD55, /RMD51, /RMD50	RN55	33X4	
/RDQM7, /RDQS7, /RMD62, /RMD59	RN62	33X4	
/RMD60, /RMD56, /RMD61, /RMD57	RN58	33X4	
/RMD58, /RMD63	RN65	33X4	
/RDQM5, /RDQS5, /RMD42, /RMD46	RN44	33X4	
/RMD45, /RMD41, /RCS-1, /RCS-0	RN37	33X4	
/RCS-2, /RCS-3, /RCS-4, /RCS-5	RN41	47X4	

DDR_VTT

/RMA0, /RMA1, /RMA2, /RMA3	R122, R108, R105, R90	33-0402
/RMA4, /RMA5, /RMA6, /RMA7	R93, R82, R83, R73	33-0402
/RMA8, /RMA9, /RMA10, /RMA11	R75, R72, R125, R132	33-0402
/RMA12, /RMA13, /RMA14	R127, R71, R62	33-0402
[7,17] /RSRAS-	/RSRAS- R148	33-0402
[7,17] /RSCAS-	/RSCAS- R160	33-0402
[7,17] /RSWE-	/RSWE- R157	33-0402

DECOUPLING CAPACITOR FOR SSTL-2 END TERMIANTION VTT ISLAND
0603 Package placed within 200mils of VTT Termination R-packs

DDR_VTT

C101 .1U-0402, C107 .1U-0402, C152 .1U-0402, C165 .1U-0402
C274 .1U-0402, C295 .1U-0402, C214 .1U-0402, C192 .1U-0402
C201 .1U-0402, C235 .1U-0402, C238 .1U-0402, C257 .1U-0402
C290 .1U-0402, C82 .1U-0402, C90 .1U-0402, C100 .1U-0402

DDR_VTT

C122 .1U-0402, C136 .1U-0402, C159 .1U-0402, C184 .1U-0402
C77 .1U-0402, C294 .1U-0402, C99 .1U-0402, C102 .1U-0402
C162 .1U-0402, C171 .1U-0402, C176 .1U-0402, C199 .1U-0402
C215 .1U-0402, C227 .1U-0402, C244 .1U-0402, C268 .1U-0402

DDR_VTT

C824 .1U-0402, C825 .1U-0402, C826 .1U-0402, C827 .1U-0402
C828 .1U-0402, C829 .1U-0402, C830 .1U-0402, C831 .1U-0402
C832 .1U-0402, C841 .1U-0402, C842 .1U-0402, C843 .1U-0402
C844 .1U-0402, C845 .1U-0402, C846 .1U-0402, C847 .1U-0402

DDR_VTT

C839 *1000U/6.3V
C848 .1U-0402, C849 .1U-0402
C850 .1U-0402, C851 .1U-0402
C852 .1U-0402, C853 .1U-0402
C854 .1U-0402, C855 .1U-0402

PROJECT : DT1
Quanta Computer Inc.

Size	Document Number	Rev
Custom	SSTL-2 TERMINATION RESISTORS	E

Date: Friday, April 04, 2003 Sheet 18 of 35

USB PORT

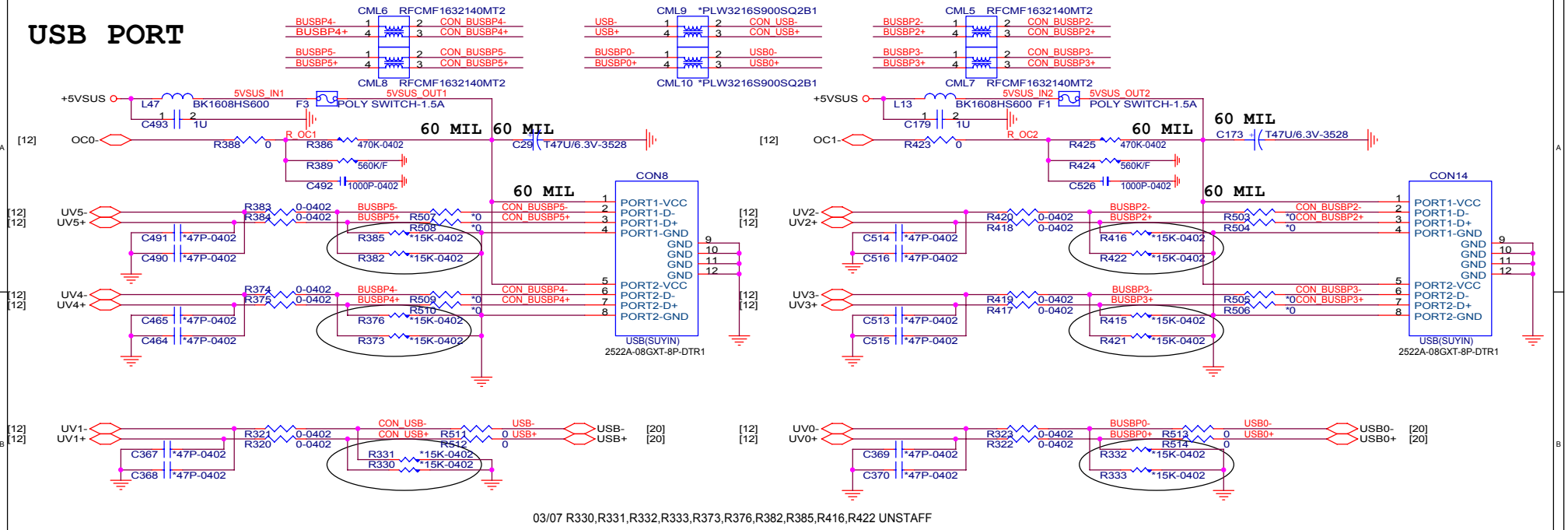

03/07 R330,R331,R332,R333,R373,R376,R382,R385,R416,R422 UNSTAFF

LED/B CONNECTOR

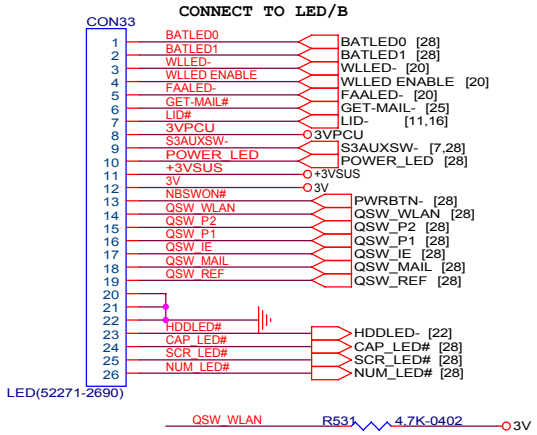

PS/2

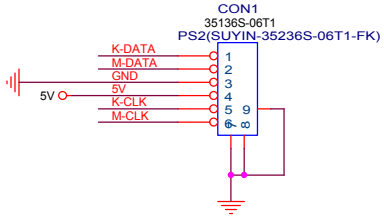

POWER SW

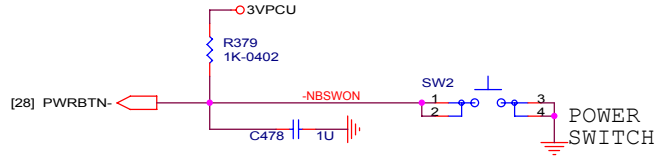

TP/B CONNECTOR

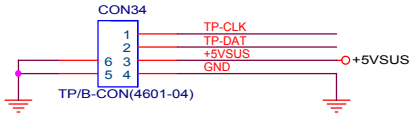

RESET SW

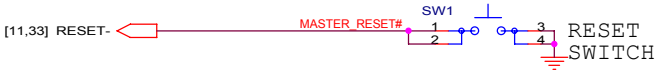

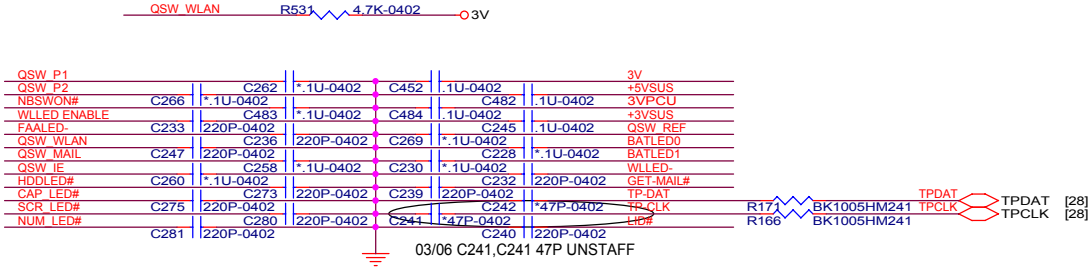

03/06 C241,C241 47P UNSTAFF

02/28 C45,C455,C456,C457 FROM 100P CHANGE TO 270P FOR EMI

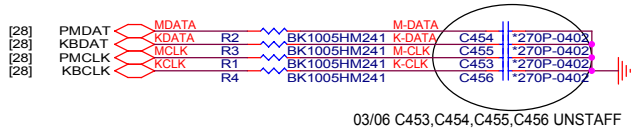

03/06 C453,C454,C455,C456 UNSTAFF

PROJECT : DT1
Quanta Computer Inc.

Size	Document Number	Rev
Custom	USB,LED/B,PS2,PW & RST CONN	E

Date: Friday, April 04, 2003 Sheet 19 of 35

PCI-CONN

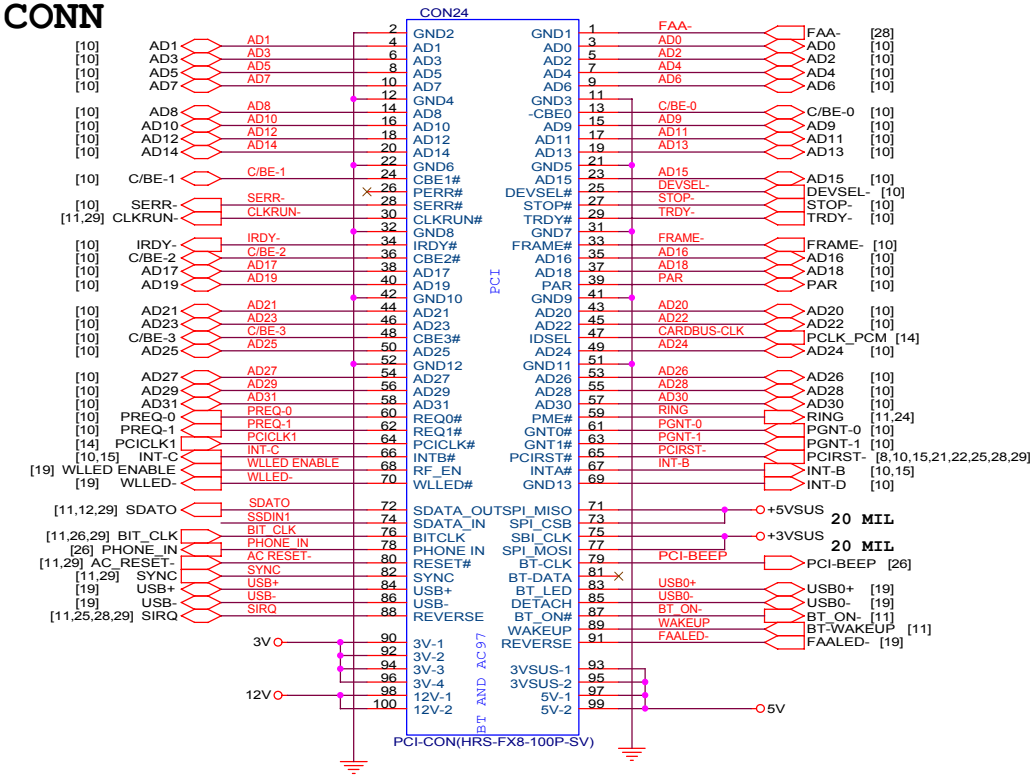

PCI PULL UP

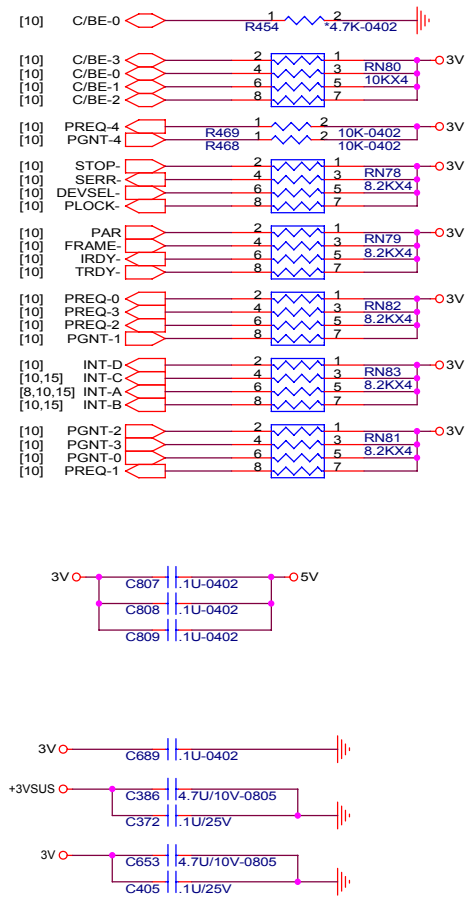

S-VIDEO(TV OUT)

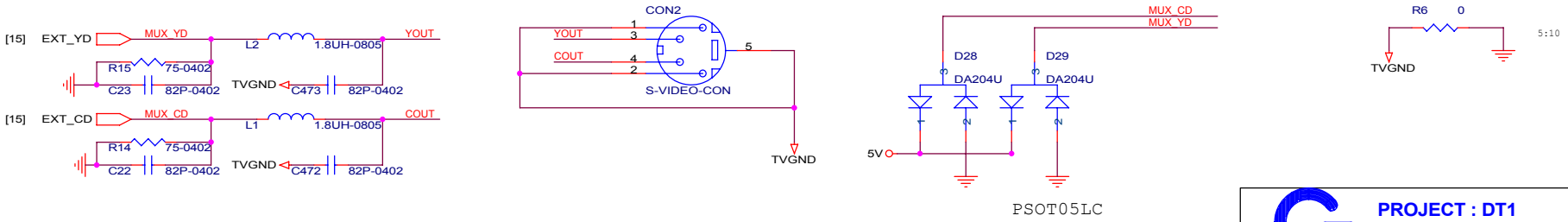

PROJECT : DT1
Quanta Computer Inc.

Size	Document Number	Rev
Custom	PCI CONN & PULL UP	E

Date: Friday, April 04, 2003 Sheet 20 of 35

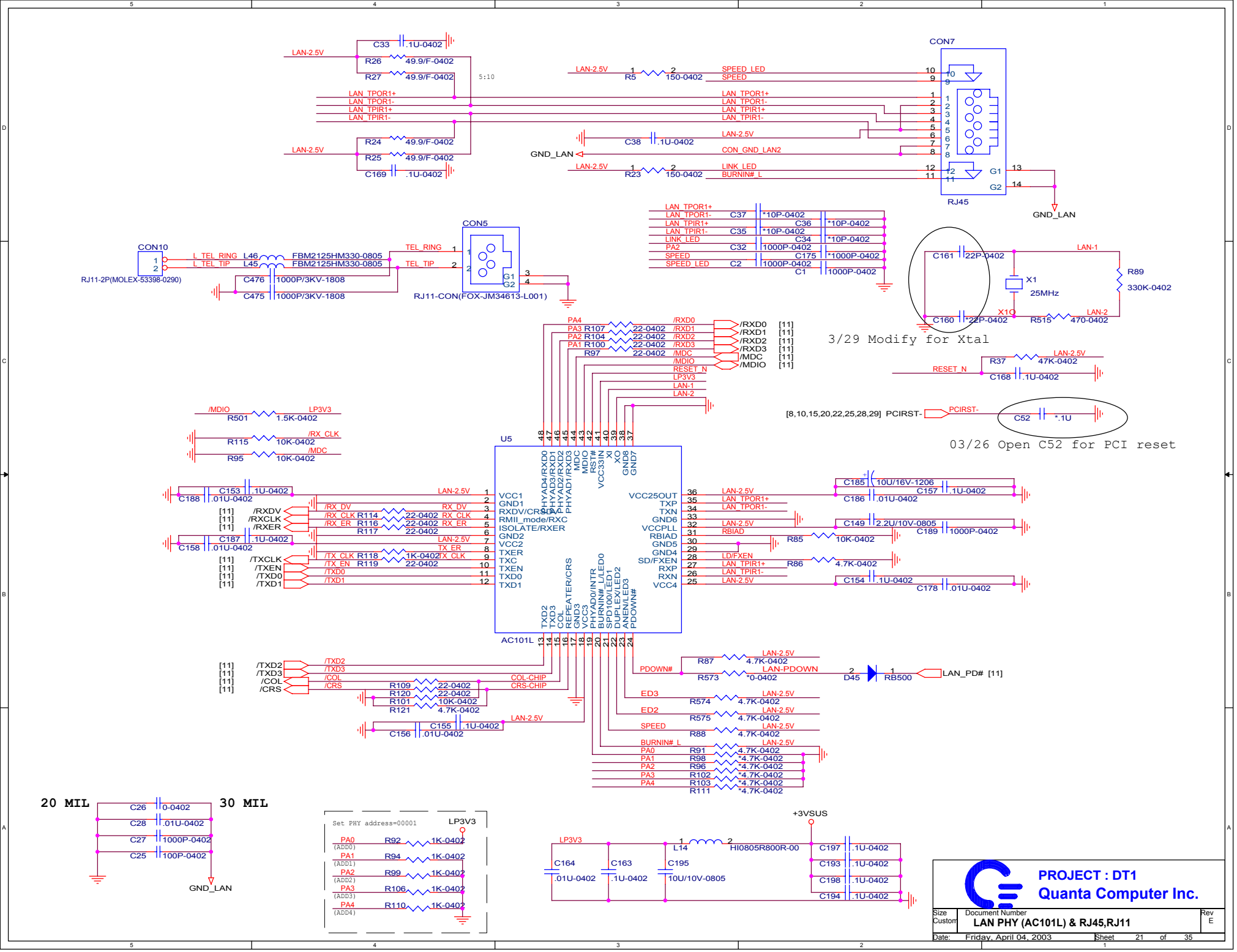
CON7
RJ45
GND_LAN
CON10
RJ11-2P(MOLEX-53398-0290)
CON5
RJ11-CON(FOX-JM34613-L001)
X1
25MHz
3/29 Modify for Xtal
03/26 Open C52 for PCI reset
U5
AC101L
20 MIL
30 MIL
Set PHY address=00001
LP3V3
+3VSUS
PROJECT : DT1
Quanta Computer Inc.
Size
Custom
Document Number
LAN PHY (AC101L) & RJ45,RJ11
Rev
E
Date: Friday, April 04, 2003
Sheet 21 of 35

HDD,CD-ROM CONNECTOR

12/18 CON19 CHANGE COMPONENT

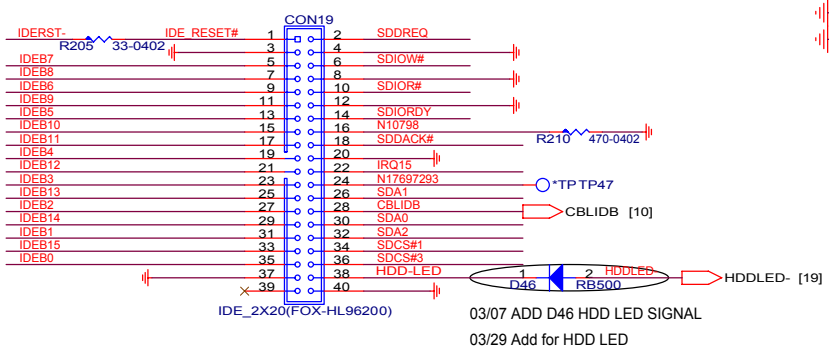

03/07 ADD D46 HDD LED SIGNAL

03/29 Add for HDD LED

HDD POWER CONNECTOR

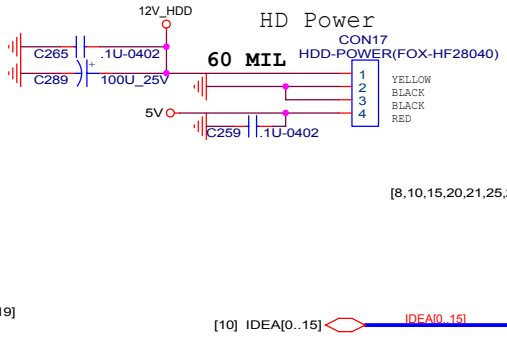

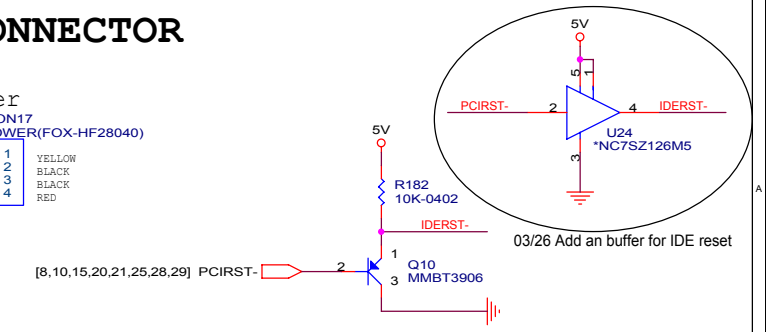

03/26 Add an buffer for IDE reset

[10] IDEA[0..15] IDEA[0..15]

IDEB[0..15] IDEB[0..15] [10]

PLACEMENT ON BOT SIDE

CLOSE TO CHIPSET SIDE

PIOW#	R532	33-0402	IDEIOW-A [10]
PDACK#	R534	33-0402	IDACK-A [10]
PIOR#	R536	33-0402	IDEIOR-A [10]
PDREQ	R538	33-0402	IDEREQA [10]
PDRDY	R540	33-0402	ICHRDYA [10]
PD_A1	R542	33-0402	IDESAA1 [10]
PD_A2	R544	33-0402	IDESAA2 [10]
PCS_3#	R546	33-0402	IDECS-A1 [10]
IRQ14	R548	33-0402	IDEIRQA [10]
PCS_1#	R549	33-0402	IDECS-A0 [10]
PD_A0	R550	33-0402	IDESAA0 [10]

CLOSE TO CHIPSET SIDE

SDA2	R533	33-0402	IDESAB2 [10]
SDCS#1	R535	33-0402	IDECS-B0 [10]
SDCS#3	R537	33-0402	IDECS-B1 [10]
SDIORDY	R539	33-0402	ICHRDYB [10]
SDDREQ	R541	33-0402	IDEREQB [10]
SDDACK#	R543	33-0402	IDACK-B [10]
SDA1	R545	33-0402	IDESAB1 [10]
SDA0	R547	33-0402	IDESAB0 [10]
SDIOW#	R206	33-0402	IDEIOW-B [10]
SDIOR#	R209	33-0402	IDEIOR-B [10]
IRQ15	R551	33-0402	IDEIRQB [10]

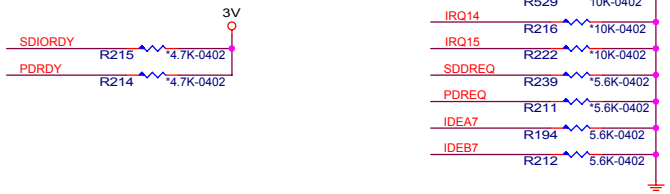

CD-ROM connector

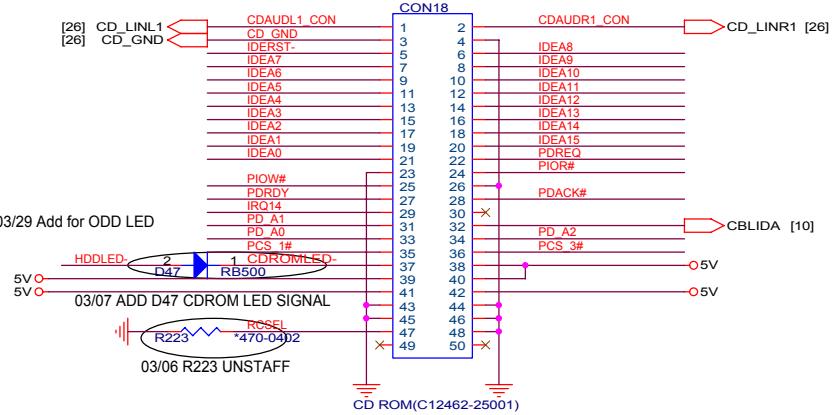

03/29 Add for ODD LED

03/07 ADD D47 CDROM LED SIGNAL

03/06 R223 UNSTAFF

LPT CONN.

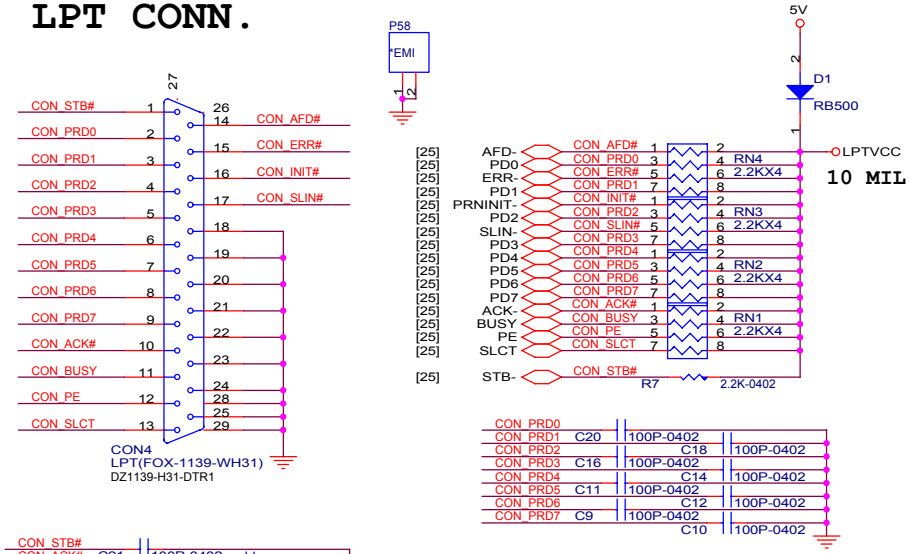

PROJECT : DT1

Quanta Computer Inc.

Size	Document Number	Rev
Custom	IDE (HDD & CDROM) & LPT	E

Date: Friday, April 04, 2003 Sheet 22 of 35

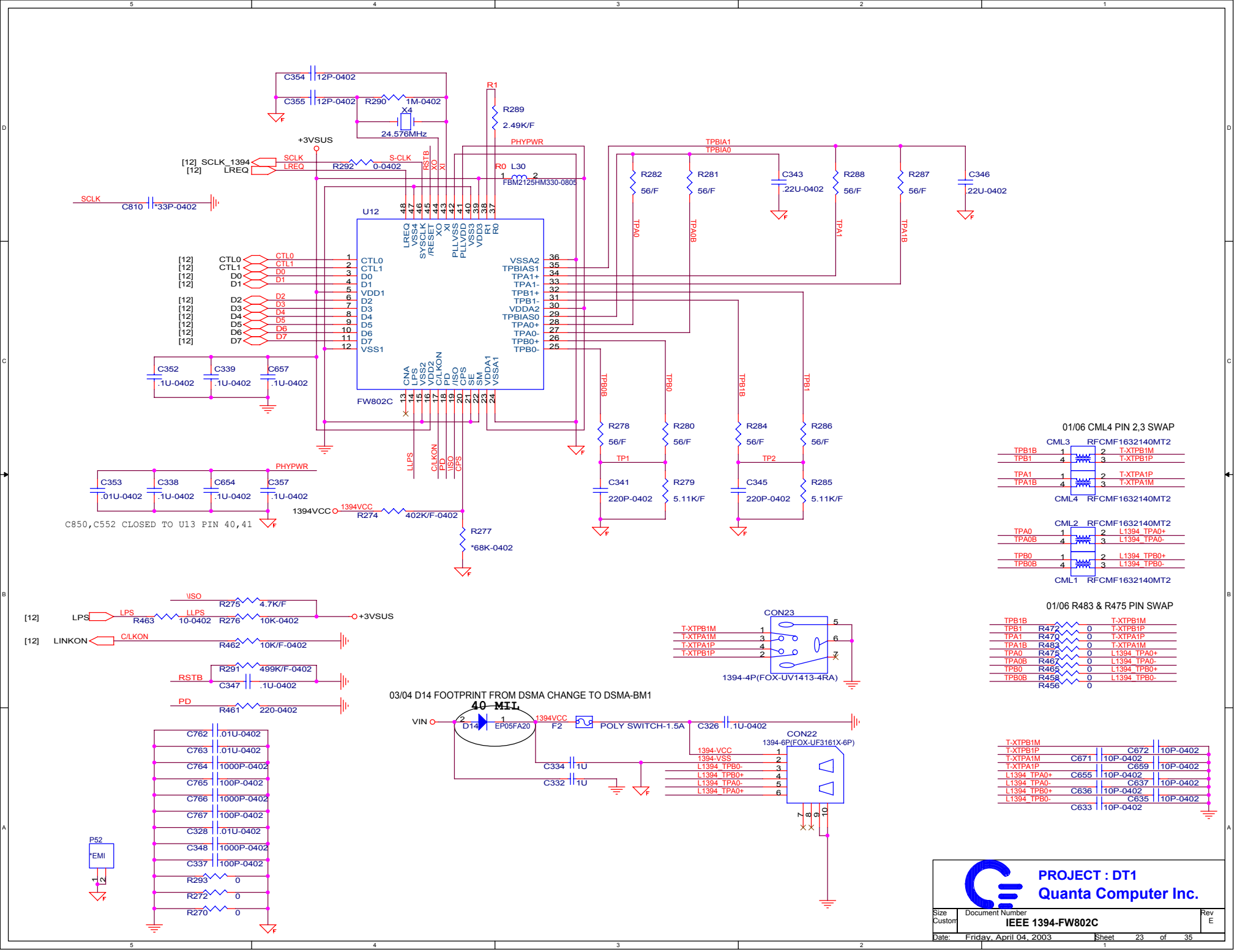
U12
FW802C
C354 12P-0402
C355 12P-0402
R290 1M-0402
X4
24.576MHz
R1
R289
2.49K/F
+3VSUS
PHYPWR
[12] SCLK_1394
[12] LREQ
SCLK
S-CLK
R292 0-0402
RSTB
XO
XI
R0 L30
FBM2125HM330-0805
SCLK
C810 *33P-0402
TPBIA1
TPBIA0
R282 56/F
R281 56/F
C343 .22U-0402
R288 56/F
R287 56/F
C346 .22U-0402
TPA0
TPA0B
TPA1
TPA1B
[12] CTL0
[12] CTL1
[12] D0
[12] D1
[12] D2
[12] D3
[12] D4
[12] D5
[12] D6
[12] D7
C352 .1U-0402
C339 .1U-0402
C657 .1U-0402
TPB0B
TPB0
TPB1B
TPB1
R278 56/F
R280 56/F
R284 56/F
R286 56/F
TP1
TP2
C341 220P-0402
R279 5.11K/F
C345 220P-0402
R285 5.11K/F
LLPS
C/LKON
PD
/ISO
CPS
PHYPWR
C353 .01U-0402
C338 .1U-0402
C654 .1U-0402
C357 .1U-0402
1394VCC
R274 402K/F-0402
R277
*68K-0402
C850,C552 CLOSED TO U13 PIN 40,41
01/06 CML4 PIN 2,3 SWAP
CML3 RFCMF1632140MT2
TPB1B
TPB1
T-XTPB1M
T-XTPB1P
TPA1
TPA1B
T-XTPA1P
T-XTPA1M
CML4 RFCMF1632140MT2
CML2 RFCMF1632140MT2
TPA0
TPA0B
L1394_TPA0+
L1394_TPA0-
TPB0
TPB0B
L1394_TPB0+
L1394_TPB0-
CML1 RFCMF1632140MT2
\ISO
R275 4.7K/F
[12] LPS
LPS
R463 10-0402
LLPS
R276 10K-0402
+3VSUS
[12] LINKON
C/LKON
R462 10K/F-0402
RSTB
R291 499K/F-0402
C347 .1U-0402
PD
R461 220-0402
CON23
T-XTPB1M
T-XTPA1M
T-XTPA1P
T-XTPB1P
1394-4P(FOX-UV1413-4RA)
01/06 R483 & R475 PIN SWAP
TPB1B T-XTPB1M
TPB1 R472 0 T-XTPB1P
TPA1 R470 0 T-XTPA1P
TPA1B R483 0 T-XTPA1M
TPA0 R475 0 L1394_TPA0+
TPA0B R467 0 L1394_TPA0-
TPB0 R465 0 L1394_TPB0+
TPB0B R458 0 L1394_TPB0-
R456 0
03/04 D14 FOOTPRINT FROM DSMA CHANGE TO DSMA-BM1
40 MIL
VIN
D14 EP05FA20
1394VCC
F2
POLY SWITCH-1.5A
C326 .1U-0402
CON22
1394-6P(FOX-UF3161X-6P)
1394-VCC
1394-VSS
L1394_TPB0-
L1394_TPB0+
L1394_TPA0-
L1394_TPA0+
C334 1U
C332 1U
T-XTPB1M
T-XTPB1P
T-XTPA1M
T-XTPA1P
L1394_TPA0+
L1394_TPA0-
L1394_TPB0+
L1394_TPB0-
C672 10P-0402
C671 10P-0402
C659 10P-0402
C655 10P-0402
C637 10P-0402
C636 10P-0402
C635 10P-0402
C633 10P-0402
C762 .01U-0402
C763 .01U-0402
C764 1000P-0402
C765 100P-0402
C766 1000P-0402
C767 100P-0402
C328 .01U-0402
C348 1000P-0402
C337 100P-0402
R293 0
R272 0
R270 0
P52
*EMI
PROJECT : DT1
Quanta Computer Inc.
Size Custom
Document Number
IEEE 1394-FW802C
Rev E
Date: Friday, April 04, 2003
Sheet 23 of 35

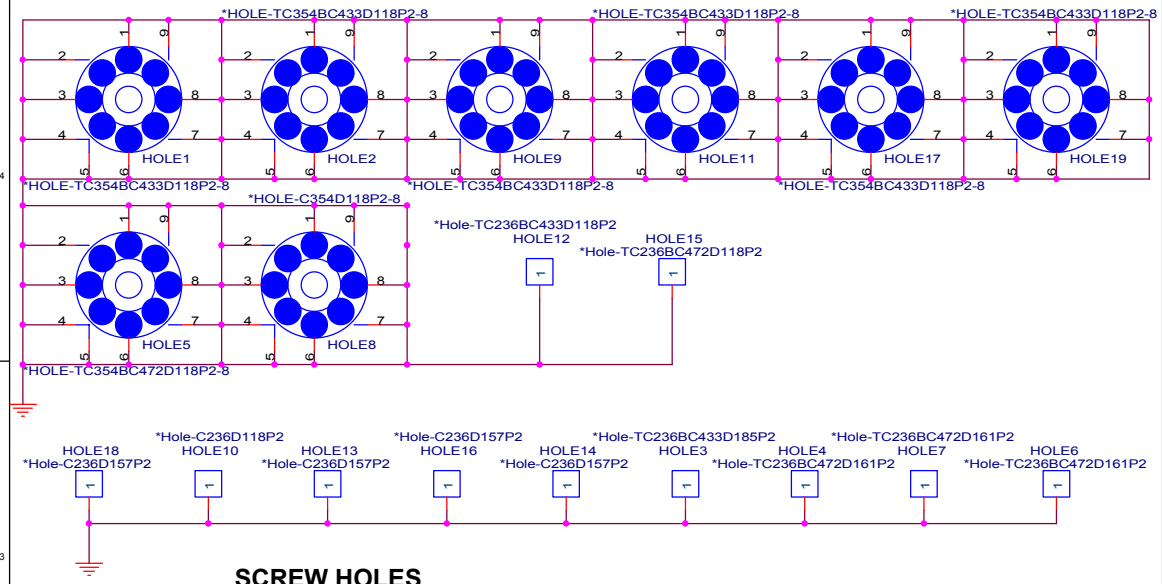

SCREW HOLES

EMI FENSES

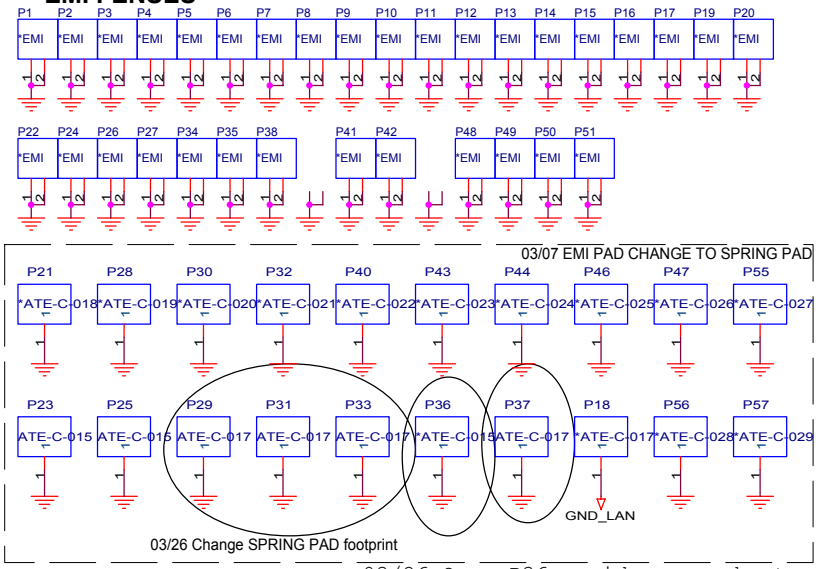

03/26 Open P36 avoid power short

Serial Port

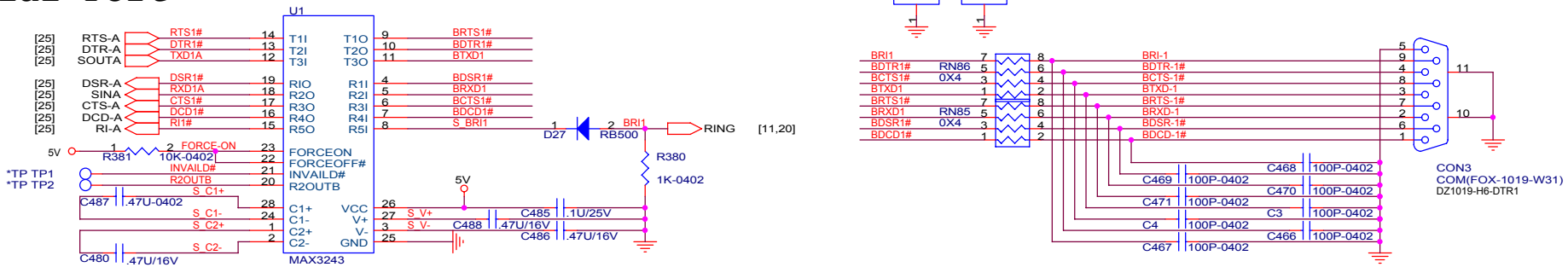

RTC

NOTE!
1.The RTCVDD is 3V
2.Decoupling capacitor must be close to 650 RTCVDD pin.
3.RTC circuit must strictly follow SiS's recommended design
SiS is not responsible for RTC problems from foreign designs.

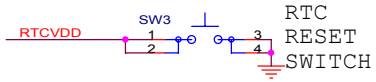

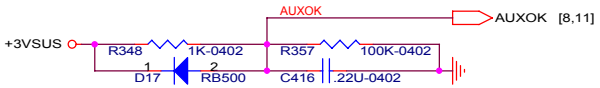

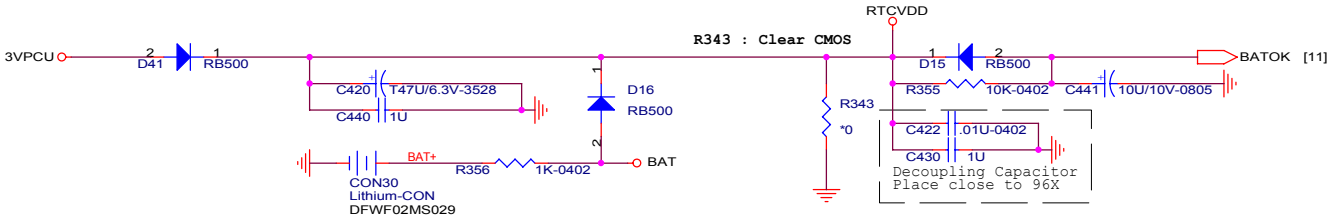

PROJECT : DT1
Quanta Computer Inc.

Size	Document Number	Rev
Custom	EMI PAD & COM1	E
Date: Friday, April 04, 2003	Sheet 24 of 35	

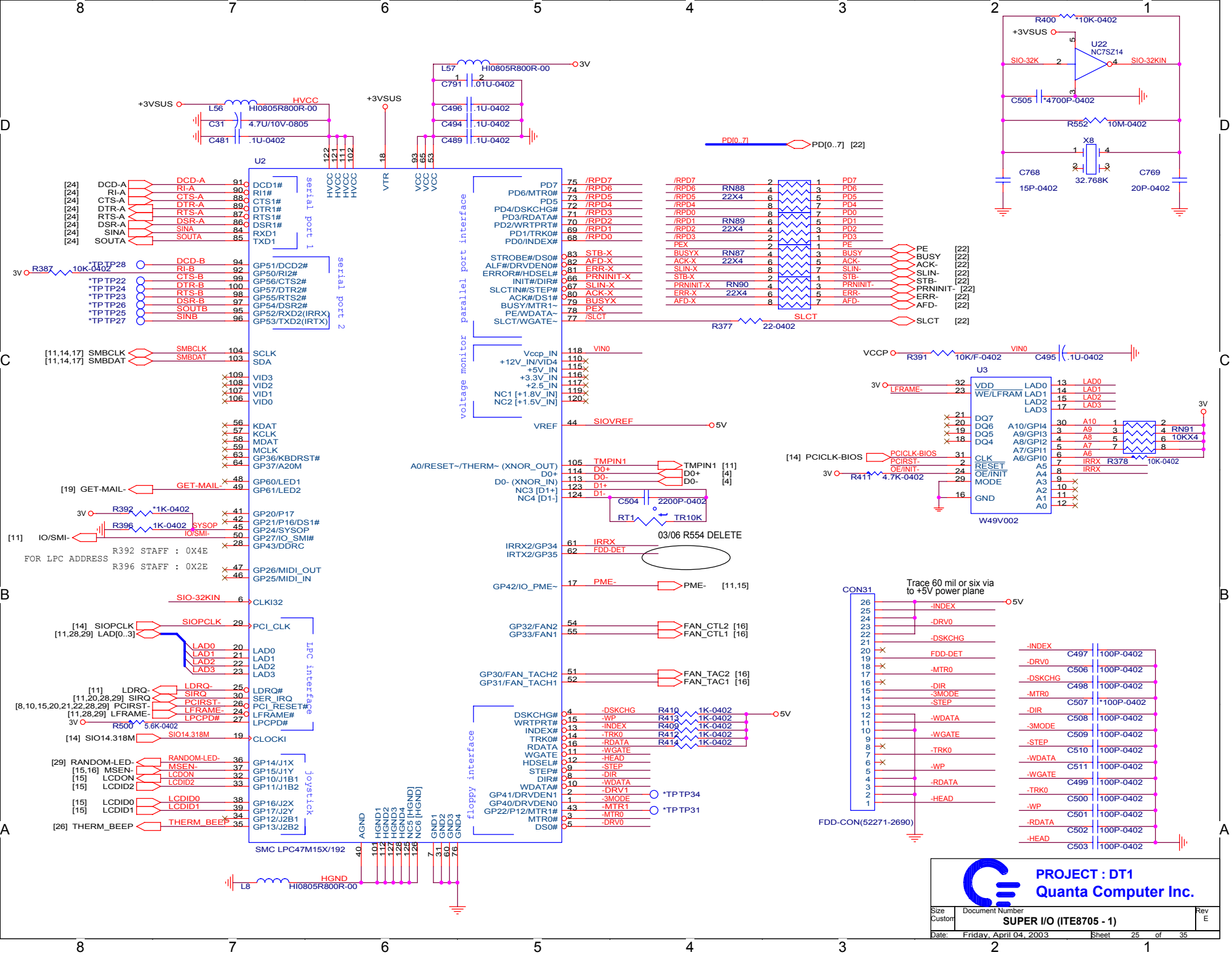

PROJECT : DT1
Quanta Computer Inc.

Size	Document Number	Rev
Custom	SUPER I/O (ITE8705 - 1)	E

Date: Friday, April 04, 2003 Sheet 25 of 35

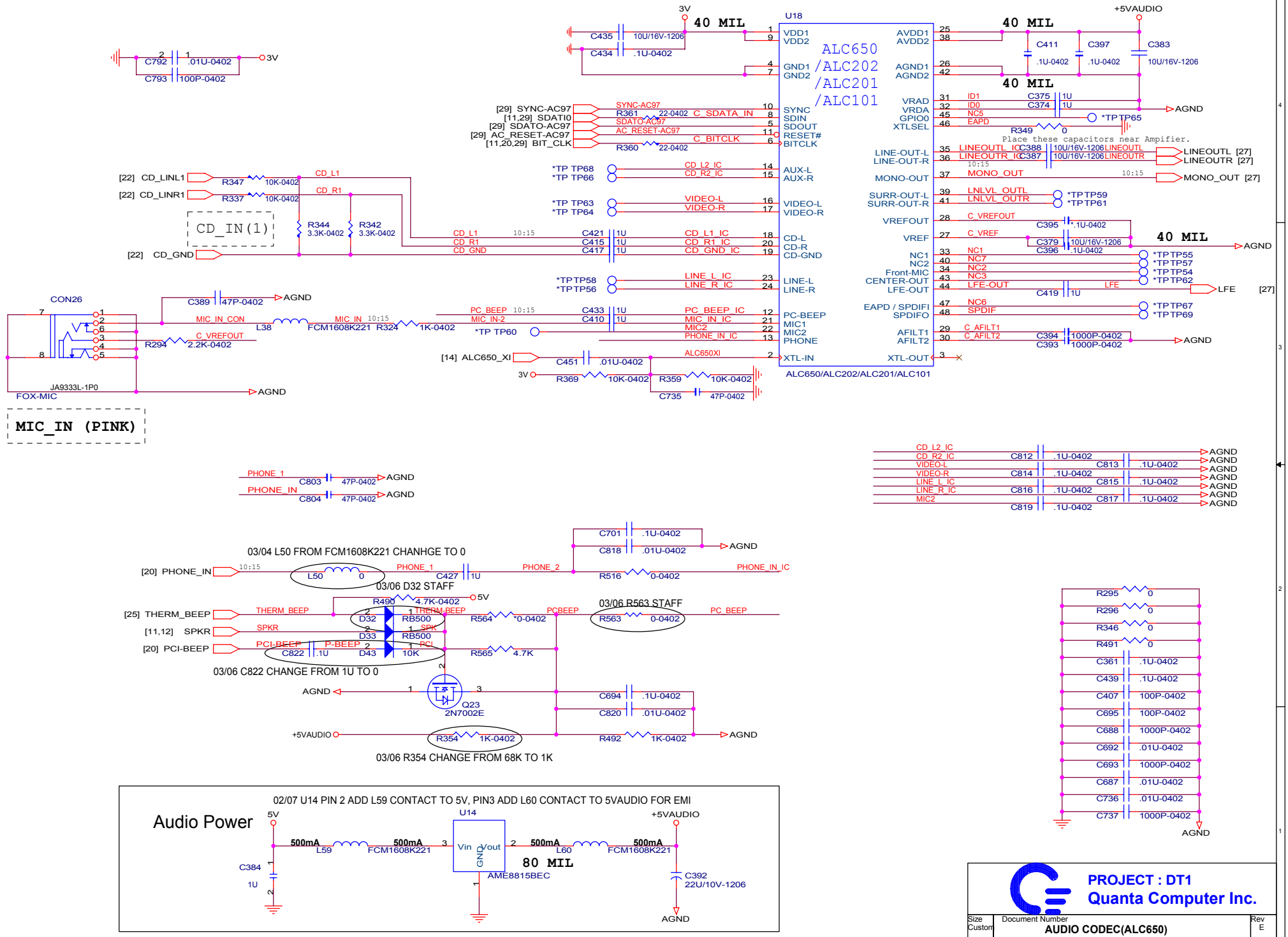

U18
ALC650
/ALC202
/ALC201
/ALC101
ALC650/ALC202/ALC201/ALC101
40 MIL
+5VAUDIO
3V
AGND
VDD1
VDD2
GND1
GND2
SYNC
SDIN
SDOUT
RESET#
BITCLK
AUX-L
AUX-R
VIDEO-L
VIDEO-R
CD-L
CD-R
CD-GND
LINE-L
LINE-R
PC-BEEP
MIC1
MIC2
PHONE
XTL-IN
AVDD1
AVDD2
AGND1
AGND2
VRAD
VRDA
GPIO0
XTLSEL
LINE-OUT-L
LINE-OUT-R
MONO-OUT
SURR-OUT-L
SURR-OUT-R
VREFOUT
VREF
NC1
NC2
Front-MIC
CENTER-OUT
LFE-OUT
EAPD / SPDIFI
SPDIFO
AFILT1
AFILT2
XTL-OUT
Place these capacitors near Ampifier.
LINEOUTL [27]
LINEOUTR [27]
MONO_OUT [27]
LFE [27]
[29] SYNC-AC97
[11,29] SDATI0
[29] SDATO-AC97
[29] AC_RESET-AC97
[11,20,29] BIT_CLK
[22] CD_LINL1
[22] CD_LINR1
[22] CD_GND
CD_IN(1)
CON26
JA9333L-1P0
FOX-MIC
MIC_IN (PINK)
[14] ALC650_XI
03/04 L50 FROM FCM1608K221 CHANHGE TO 0
[20] PHONE_IN
03/06 D32 STAFF
[25] THERM_BEEP
[11,12] SPKR
[20] PCI-BEEP
03/06 R563 STAFF
03/06 C822 CHANGE FROM 1U TO 0
Q23
2N7002E
03/06 R354 CHANGE FROM 68K TO 1K
02/07 U14 PIN 2 ADD L59 CONTACT TO 5V, PIN3 ADD L60 CONTACT TO 5VAUDIO FOR EMI
Audio Power
U14
AME8815BEC
80 MIL
PROJECT : DT1
Quanta Computer Inc.
Size Custom
Document Number
AUDIO CODEC(ALC650)
Rev E
Date: Friday, April 04, 2003
Sheet 26 of 35

Audio amplifier

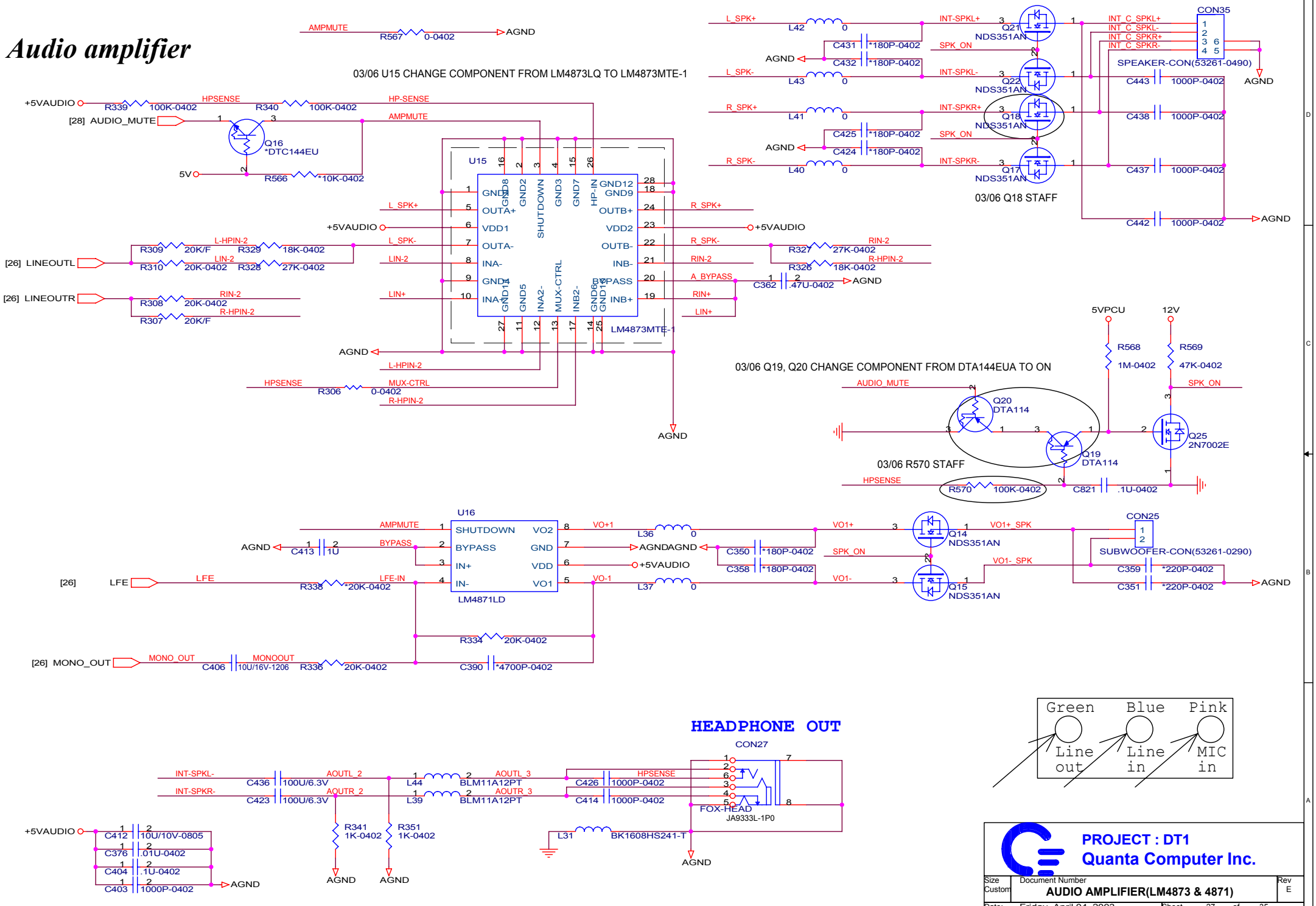

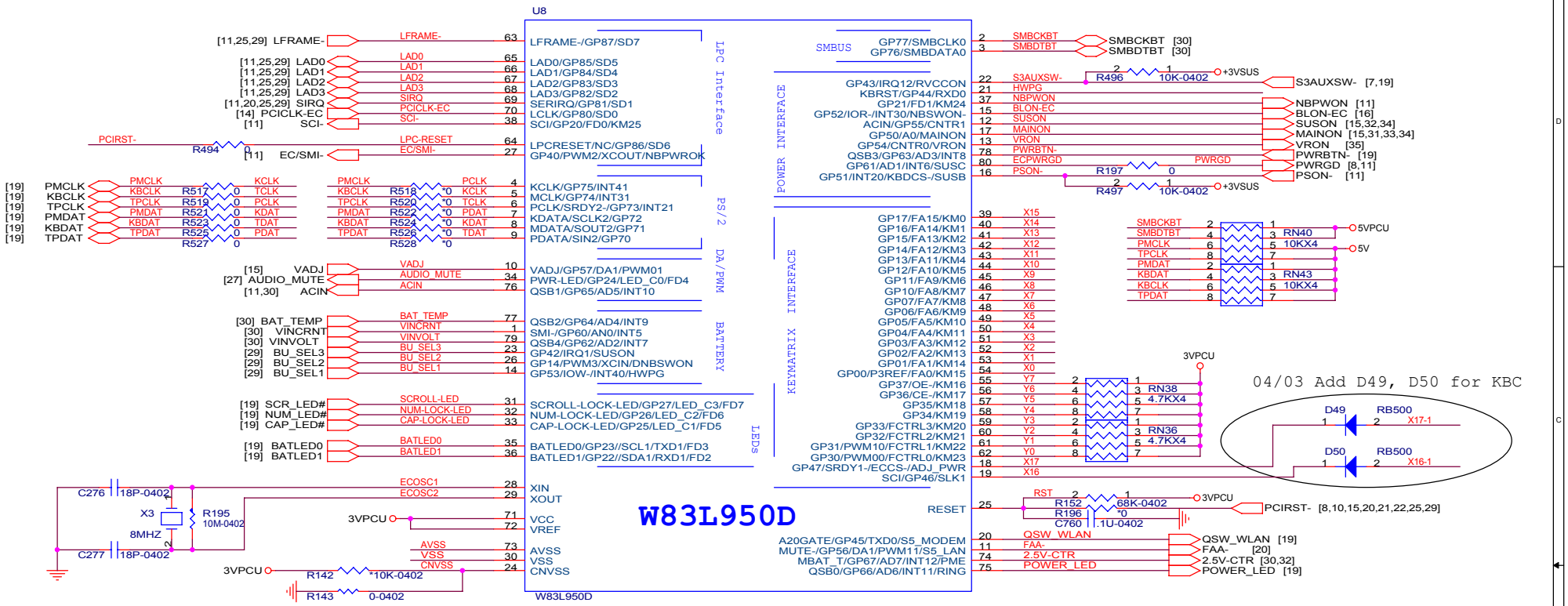

PROJECT : DT1
Quanta Computer Inc.

Size	Document Number	Rev
Custom	EC W83L950D	E

Date: Friday, April 04, 2003 Sheet 28 of 35

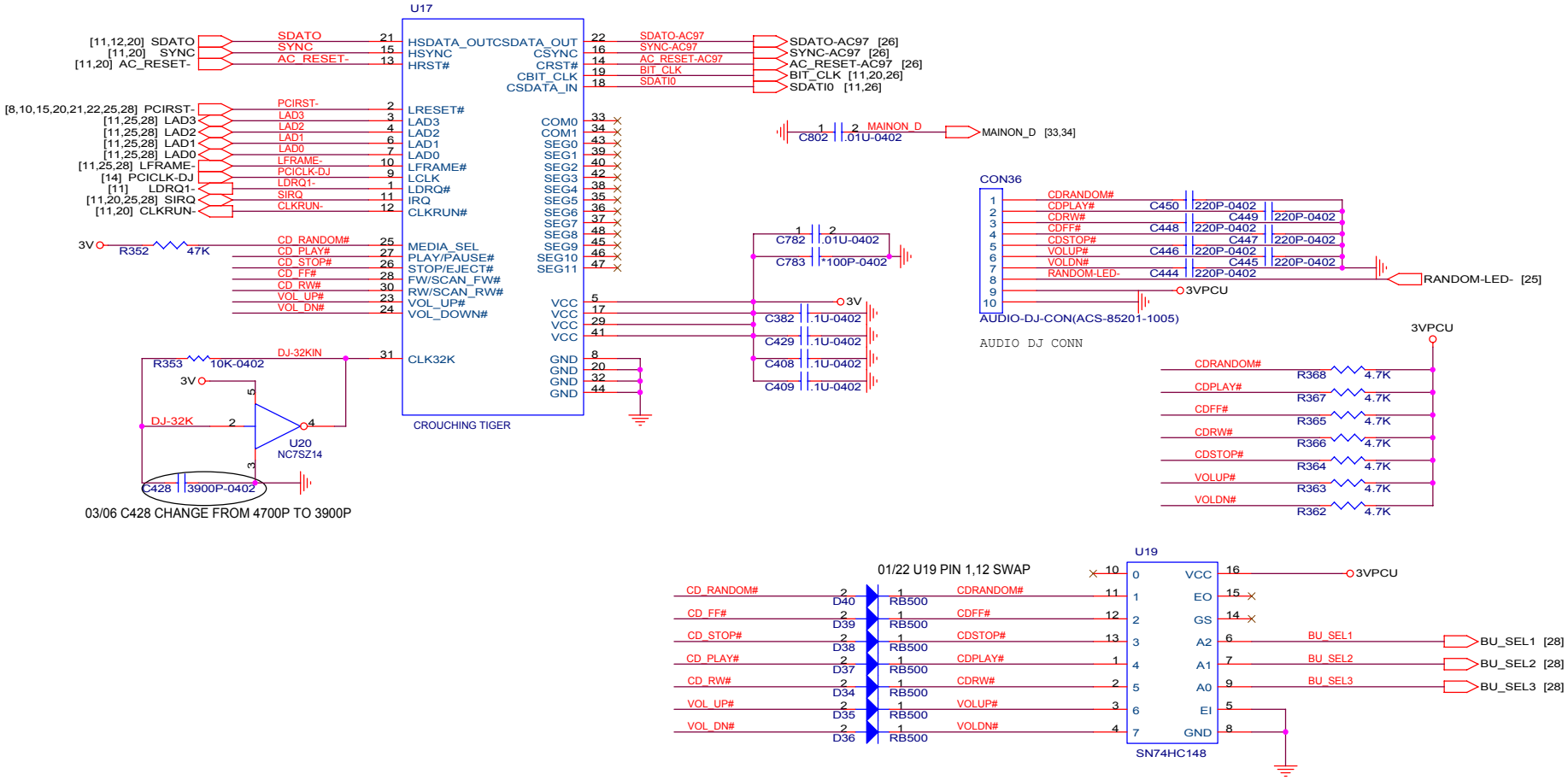

SN74HC148 TABLE

INPUTS									OUTPUTS				
EI	0	1	2	3	4	5	6	7	A2	A1	A0	GS	EO
H	X	X	X	X	X	X	X	X	H	H	H	H	H
L	H	H	H	H	H	H	H	H	H	H	H	H	L
L	X	X	X	X	X	X	X	L	L	L	L	L	H
L	X	X	X	X	X	X	L	H	L	L	H	L	H
L	X	X	X	X	X	L	H	H	L	H	L	L	H
L	X	X	X	X	L	H	H	H	L	H	H	L	H
L	X	X	X	L	H	H	H	H	H	L	L	L	H
L	X	X	L	H	H	H	H	H	H	L	H	L	H
L	X	L	H	H	H	H	H	H	H	H	L	L	H
L	L	H	H	H	H	H	H	H	H	H	H	L	H

PROJECT : DT1
Quanta Computer Inc.

Size	Document Number	Rev
Custom	OZ263 AUDIO-DJ	E

Date: Friday, April 04, 2003 Sheet 29 of 35

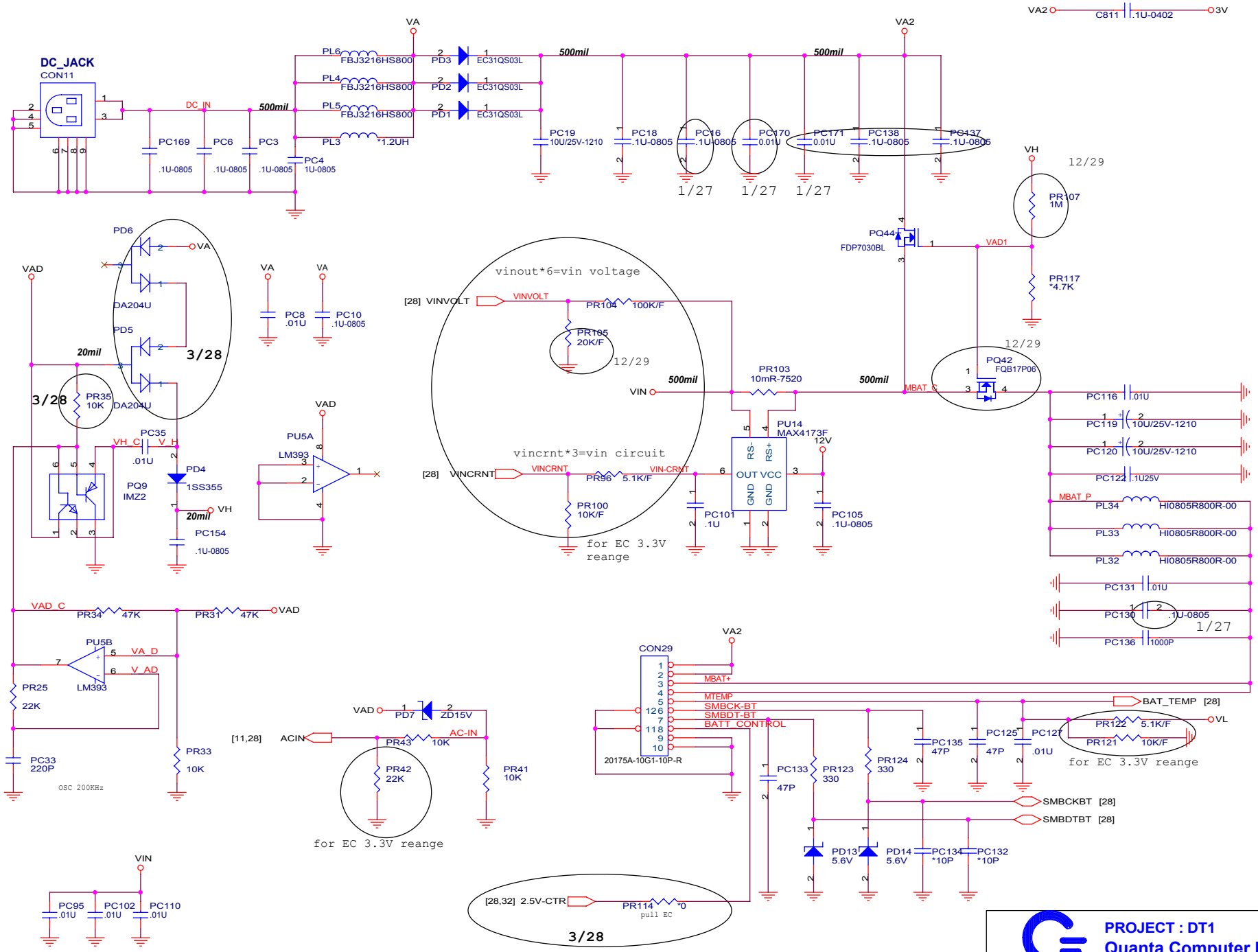

PROJECT : DT1
Quanta Computer Inc.

Size	Document Number	Rev
Custom	BATTERY CONN & POWER JACK	E

Date: Friday, April 04, 2003 Sheet 30 of 35

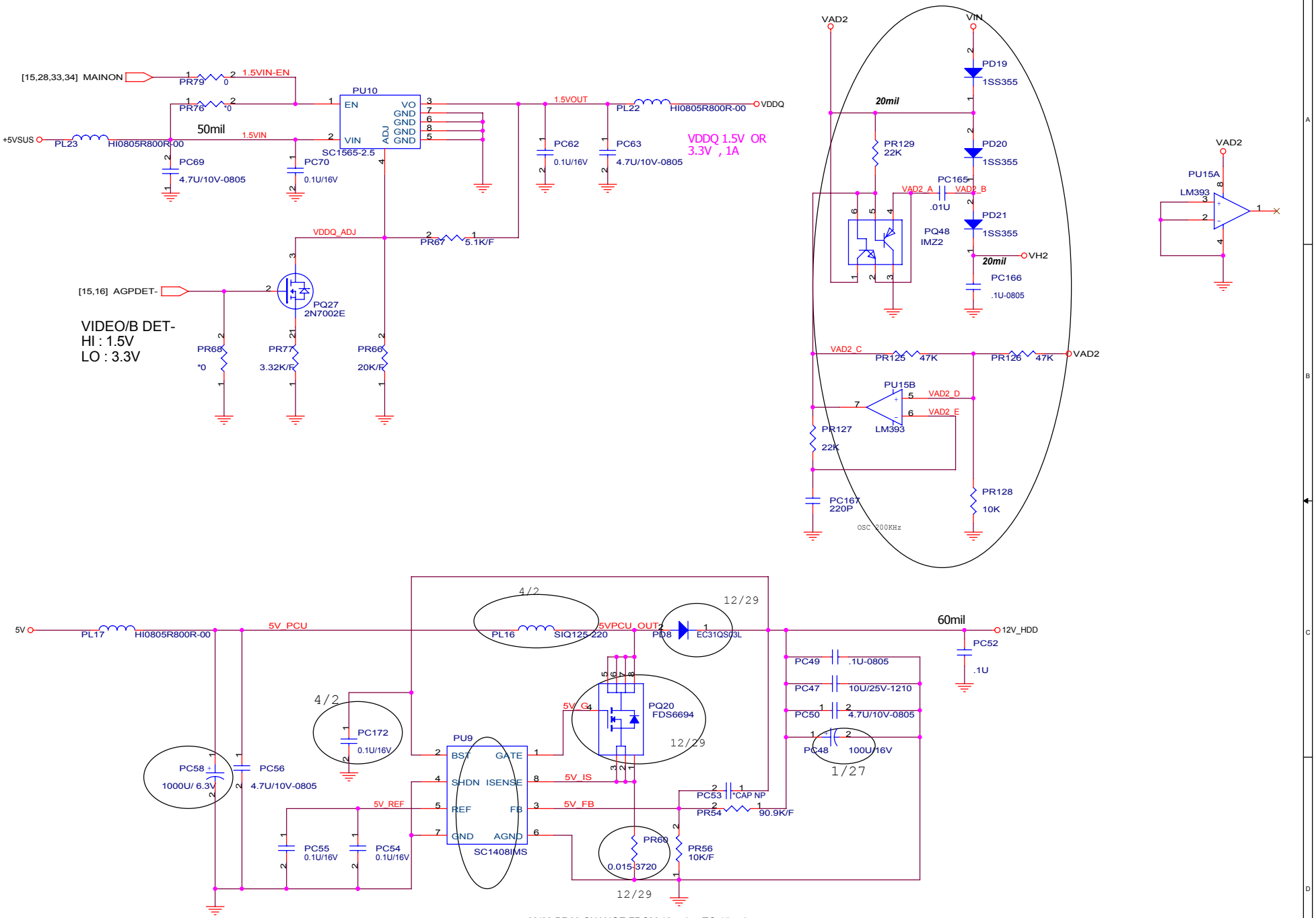

03/06 PC58 CHANGE COMPONENT TO 100U/16V

03/06 PR60 CHANGE FROM 10mohm TO 15mohm

PROJECT : DT1
Quanta Computer Inc.

Size	Document Number	Rev
Custom	POWER 12V_HDD & AGP(VDDQ)	E

Date: Friday, April 04, 2003 Sheet 31 of 35

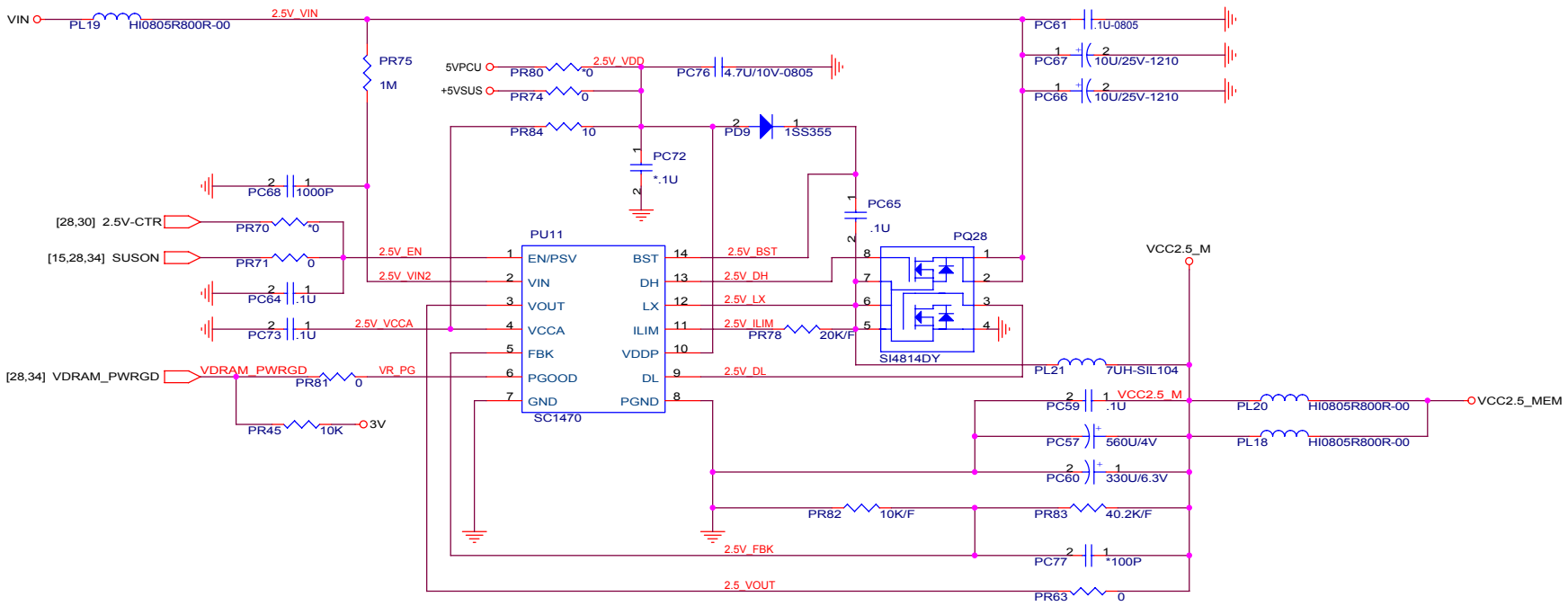

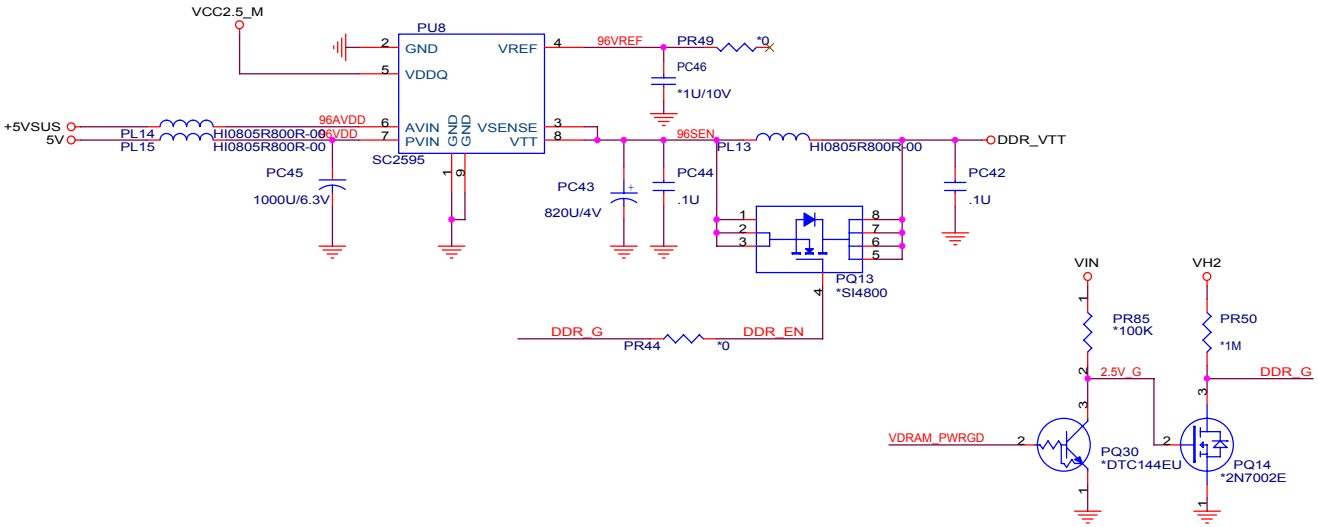

PROJECT : DT1
Quanta Computer Inc.

Size	Document Number	Rev
Custom	POWER - DDR & 2.5V	E

Date: Friday, April 04, 2003 Sheet 32 of 35

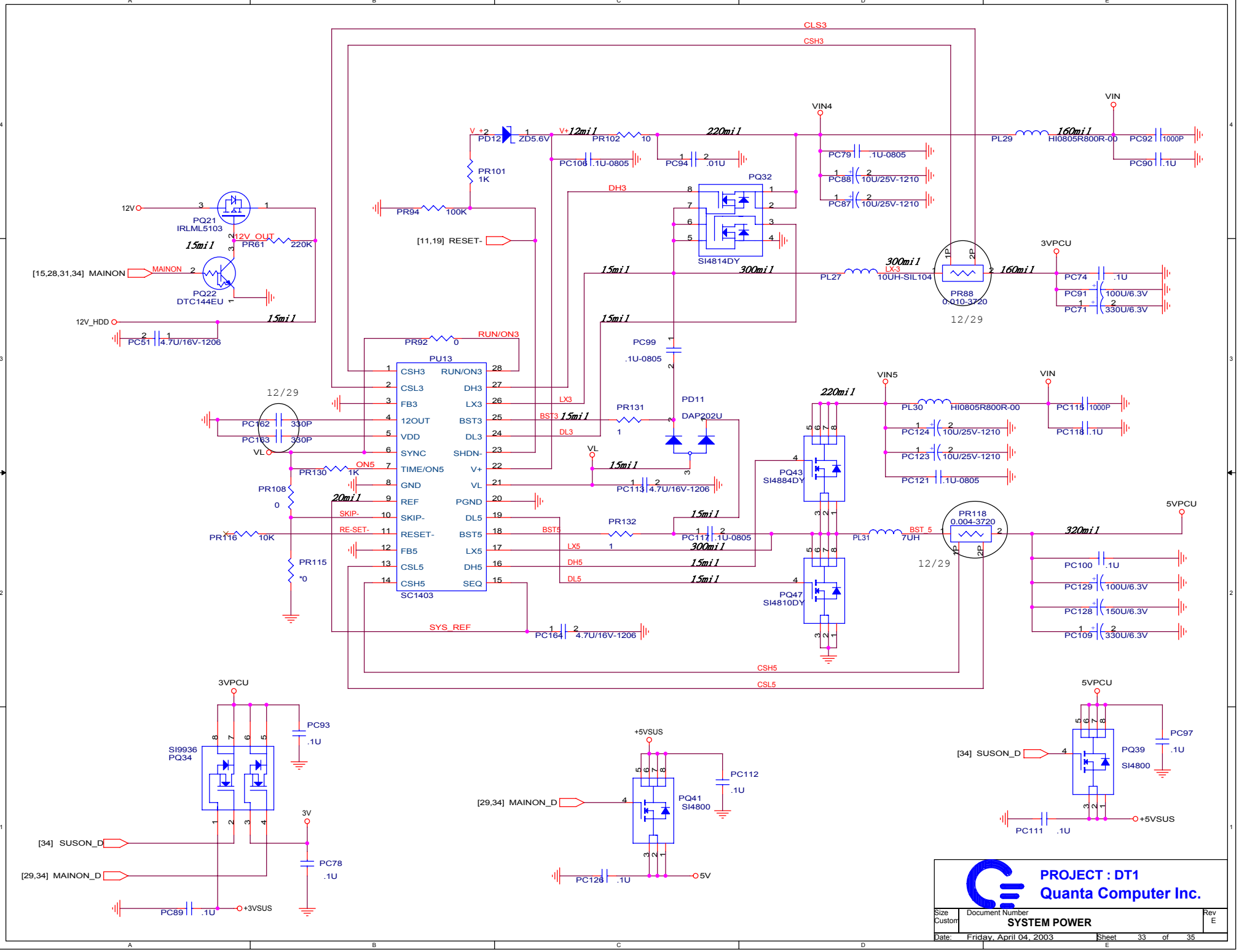

PROJECT : DT1
Quanta Computer Inc.

Size	Document Number	Rev
Custom	SYSTEM POWER	E

Date: Friday, April 04, 2003 Sheet 33 of 35

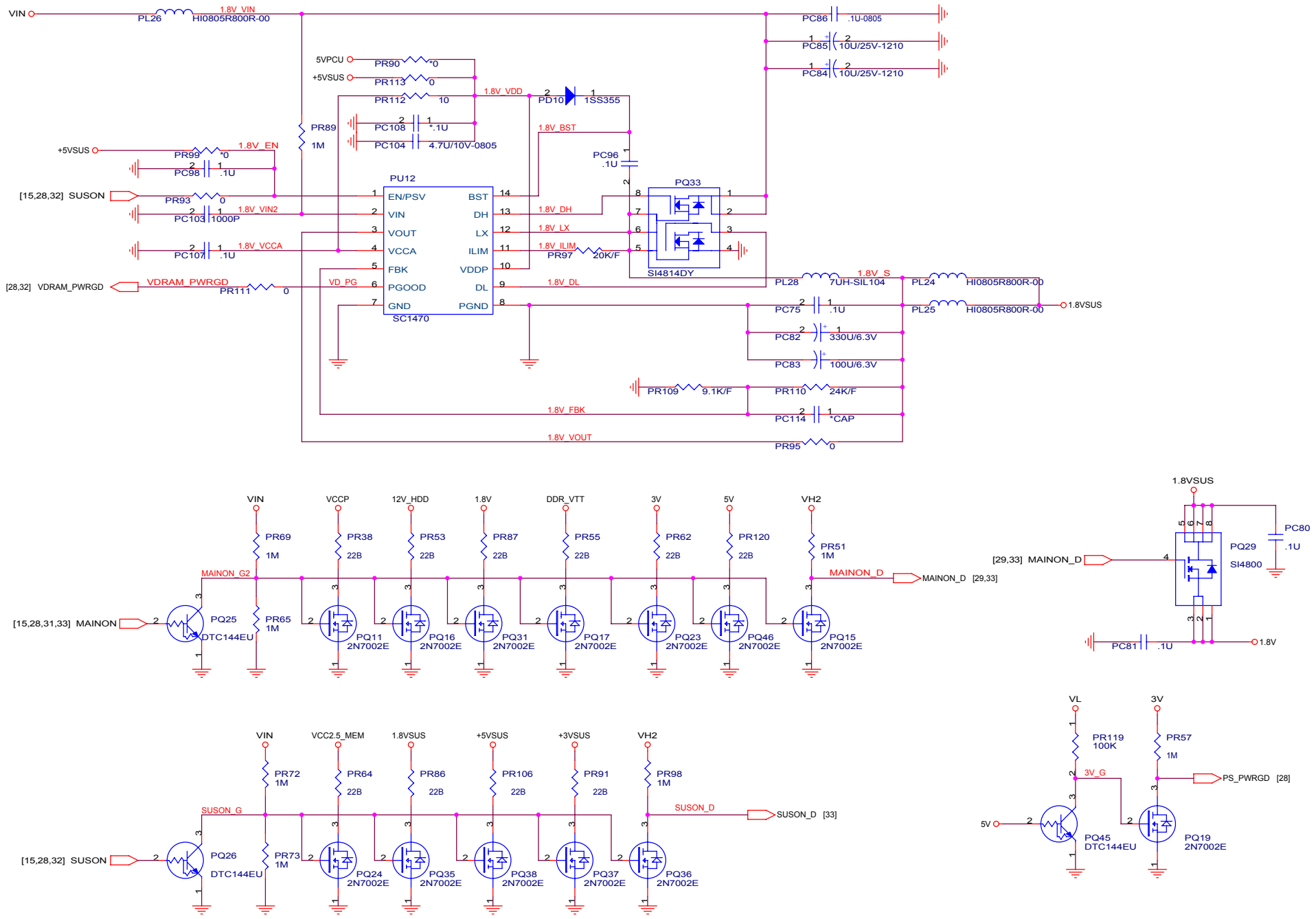

PROJECT : DT1

Quanta Computer Inc.

Size	Document Number	Rev
Custom	POWER DISCHARGE	E

Date: Friday, April 04, 2003 Sheet 34 of 35

HIP6301 FOR INTEL Brookdale POWER CKT-DDR

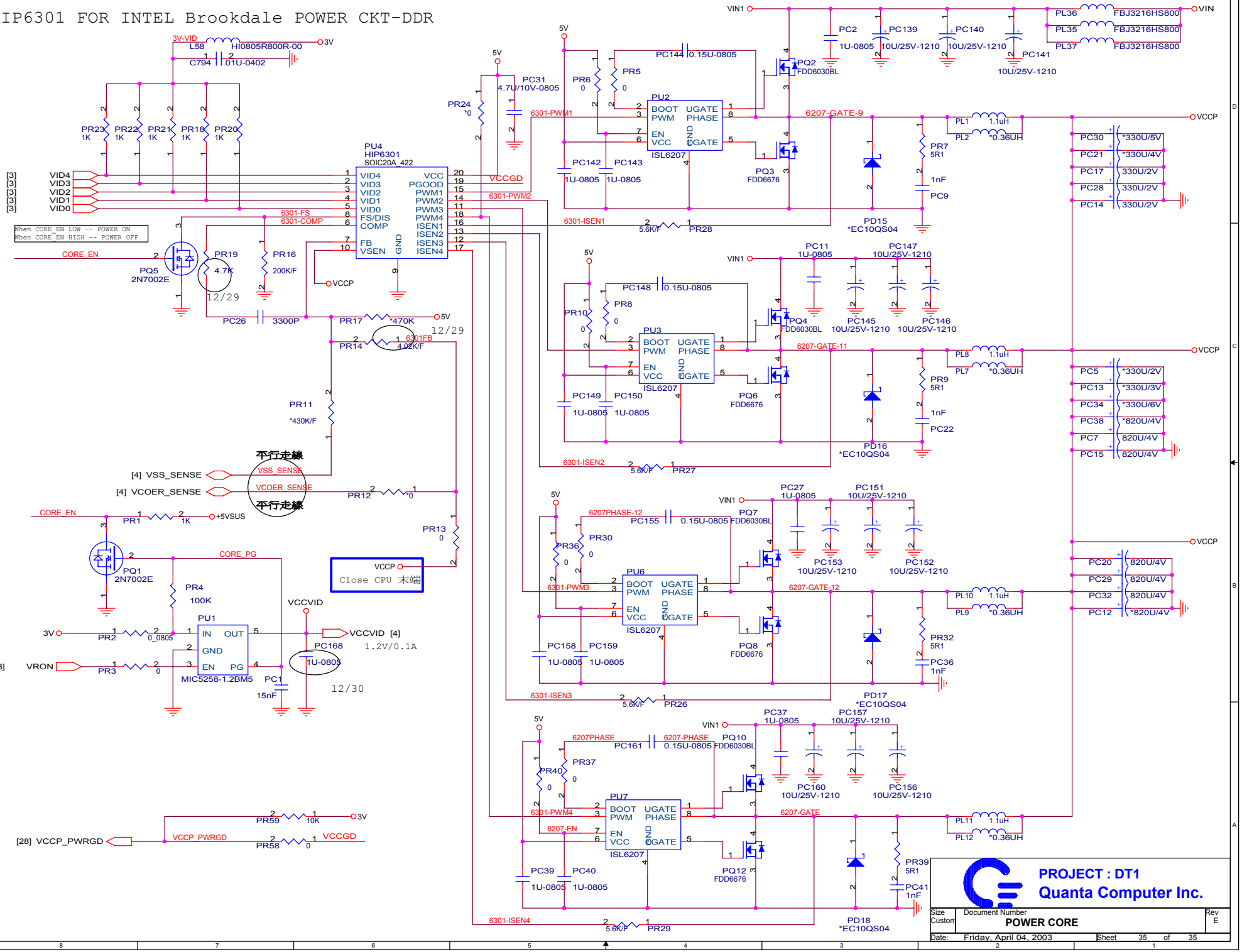

PROJECT : DT1
Quanta Computer Inc.

Size	Document Number	Rev
Custom	POWER CORE	E

Date: Friday, April 04, 2003 Sheet 35 of 35