MODEL	REV	CHANGE LIST
ZL9	1A	Preliminary Release
	2A	Page 4 : Add C573 4.7pf for Signal quanlity Page 6 : Add R460 0om for UMA. Page 11 : seprate SATALED# for IDE interrupt. Page 14 :add R45 0ohm for M52-T. Page 19 : enlarge H22,H23 to 6mm for VGA sink Nut. Page 24 : Add 459 10Kohm for keep the GPIO normal Low. Page 25 : Add R239 0ohm for Po Po sound. Page 27 : Add R458 , Q25 for SATALED#. Page 28 : PL14->0.6uH,PR122->680ohm,PR120->680ohm,PR118->470ohm,PC55->220P,PR38->160K for power efficiency. Page 30 : PR40->20K,PD11->CH551,PC39->.22U,PC46->2.2n,PL11->1.5UH,PR59->221K for power efficiency. Page 30 : PC176->1000P,PC182->1000P,PC179->1000P,PC180->100P,PC181->100P,PC177->1000P for EMI. Page 31 : PR142->0 , PR94->100K,PR95->0,PR93->100K for battery charger modify ,PC178->1000P for EMI. Page 32 : PR15->6.65K , PL6->1.0UH for power efficiency.
	3A	Page 25 : R250->100Kohm, Q13->2N7002,Q23->2N7002,Add Q24 AO3403 for SPDIF on/off LED. Page 27 :Del R458 , Q25 for HDD LED can't light issue.

Model / Page	ZL8 MB FM	TO
1	1A	
2	1A	
3	1A	
4	2A	
5	1A	
6	2A	
7	1A	
8	1A	
9	1A	
10	1A	
11	2A	
12	1A	
13	1A	
14	2A	
15	1A	
16	1A	
17	1A	
18	1A	
19	2A	
20	2A	
21	1A	
22	1A	
23	1A	
24	2A	
25	2A	3A
26	1A	
27	2A	3A
28	2A	
29	1A	
30	2A	
31	2A	
32	2A	

QUANTA COMPUTER

PROJECT : ZL9	DOC. NO. ???	REV: 1A	ASSY: 31ZL9MB0020
APPROVED BY : Vic Lin #15598	CHECKED BY: Jerry Lin #15573	DRAWING BY : Jerry Wang #13011	DATE: 2005/12/20

ZL9

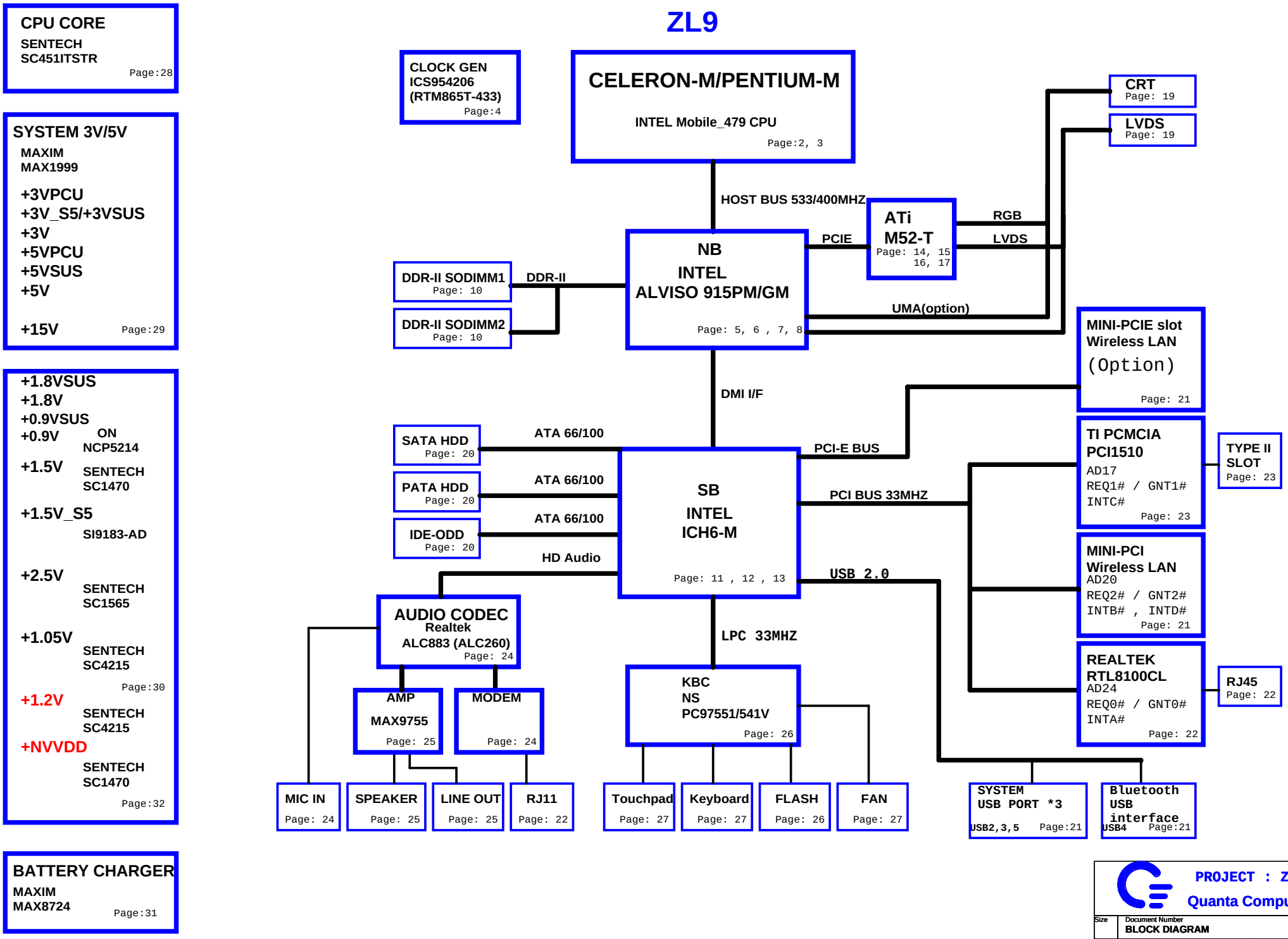

PROJECT : ZL9

Quanta Computer Inc.

Size	Document Number	Rev
	BLOCK DIAGRAM	3A

Date: Monday, December 19, 2005 Sheet 1 of 32

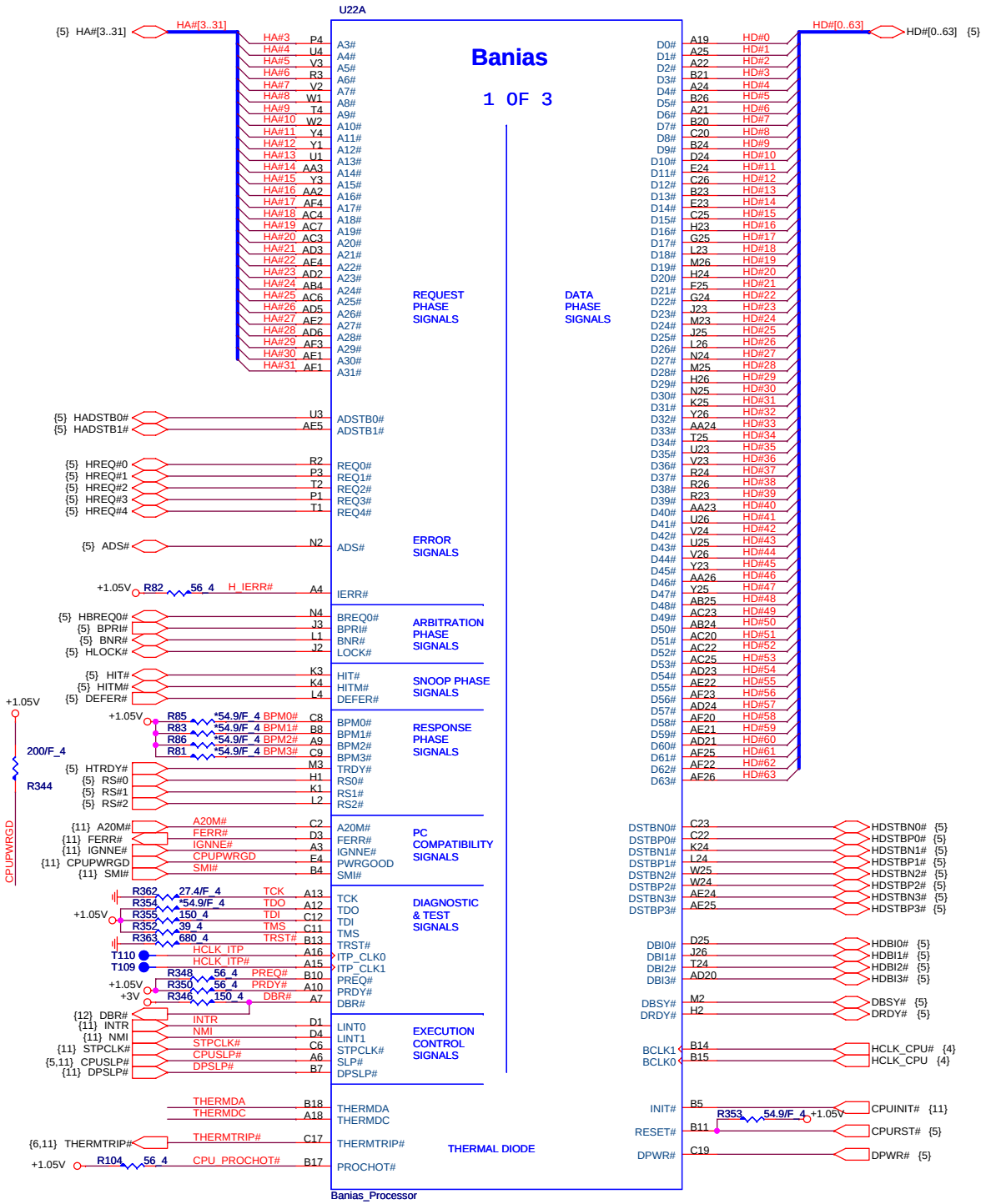

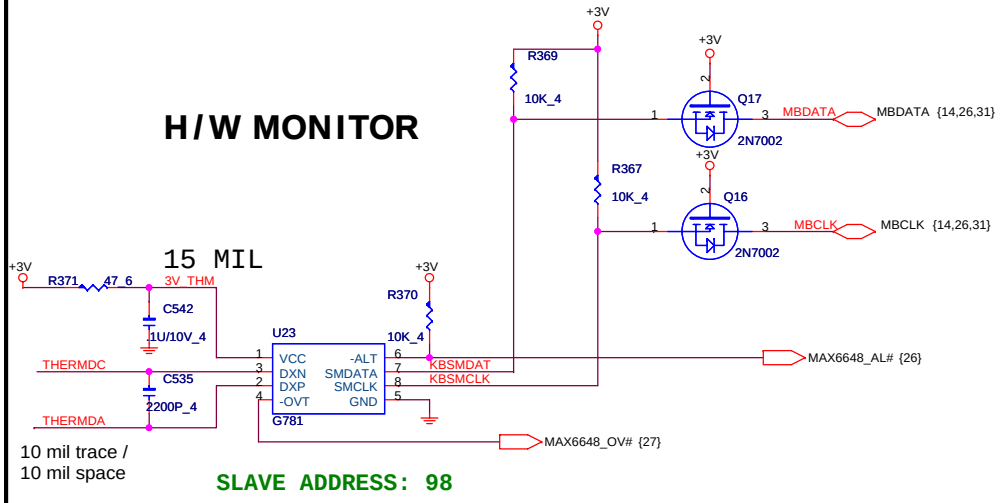

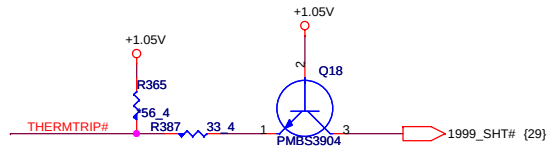

PROJECT : ZL9

Quanta Computer Inc.

Size	Document Number	Rev
	CPU (HOST BUS)-1	3A

Date: Monday, December 19, 2005 Sheet 2 of 32

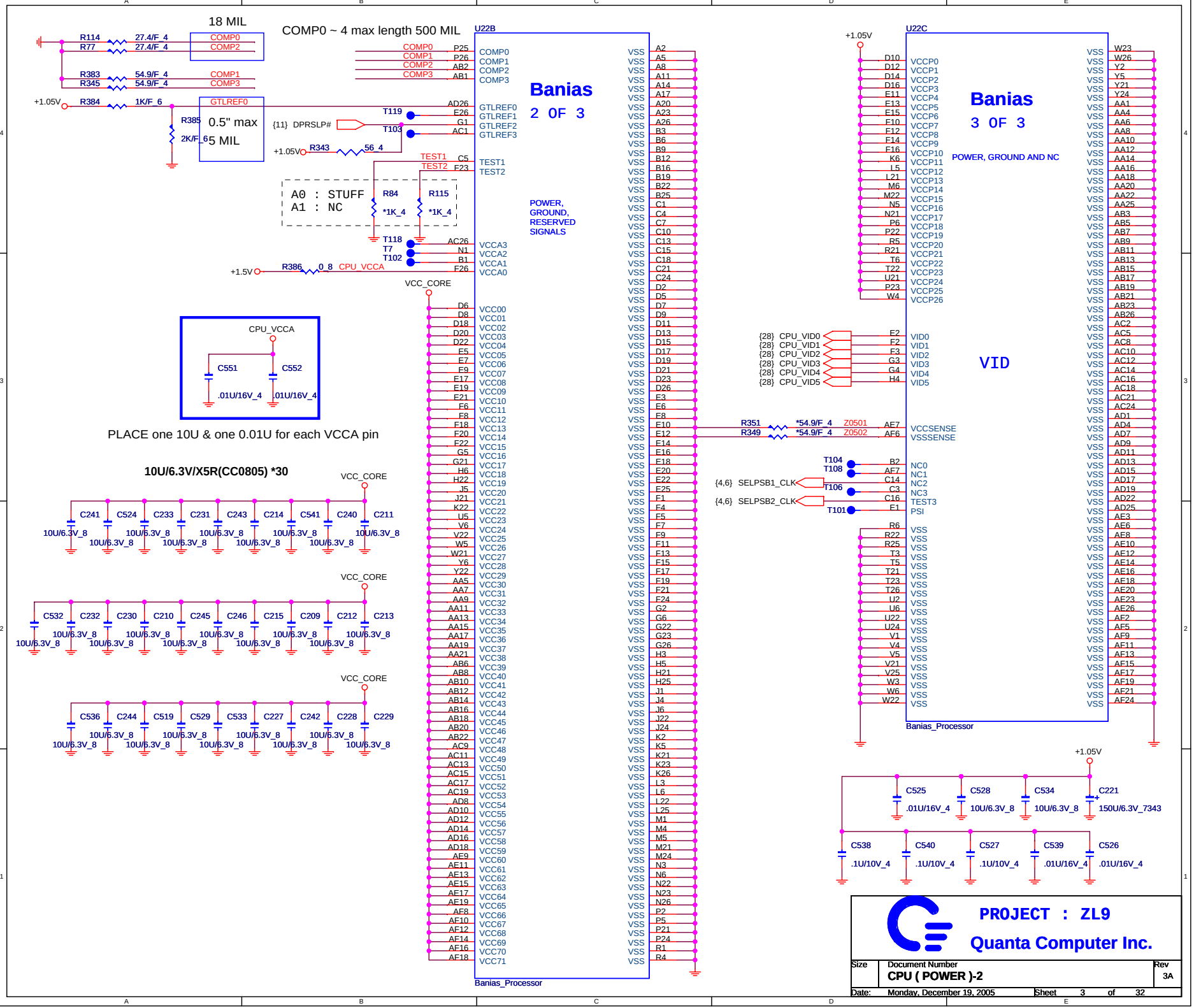
18 MIL
COMP0 ~ 4 max length 500 MIL
R114 27.4/F_4 COMP0
R77 27.4/F_4 COMP2
R383 54.9/F_4 COMP1
R345 54.9/F_4 COMP3
+1.05V R384 1K/F_6 GTLREF0
R385 2K/F_6
0.5" max
5 MIL
{11} DPRSLP#
+1.05V R343 56_4
A0 : STUFF
A1 : NC
R84 *1K_4
R115 *1K_4
+1.5V R386 0_8 CPU_VCCA
VCC_CORE
CPU_VCCA
C551 .01U/16V_4
C552 .01U/16V_4
PLACE one 10U & one 0.01U for each VCCA pin
10U/6.3V/X5R(CC0805) *30
VCC_CORE
C241 C524 C233 C231 C243 C214 C541 C240 C211
10U/6.3V_8
C532 C232 C230 C210 C245 C246 C215 C209 C212 C213
C536 C244 C519 C529 C533 C227 C242 C228 C229
U22B
Banias
2 OF 3
POWER, GROUND, RESERVED SIGNALS
Banias_Processor
U22C
Banias
3 OF 3
POWER, GROUND AND NC
VID
{28} CPU_VID0
{28} CPU_VID1
{28} CPU_VID2
{28} CPU_VID3
{28} CPU_VID4
{28} CPU_VID5
R351 *54.9/F_4 Z0501
R349 *54.9/F_4 Z0502
{4,6} SELPSB1_CLK
{4,6} SELPSB2_CLK
Banias_Processor
+1.05V
C525 .01U/16V_4
C528 10U/6.3V_8
C534 10U/6.3V_8
C221 150U/6.3V_7343
C538 .1U/10V_4
C540 .1U/10V_4
C527 .1U/10V_4
C539 .01U/16V_4
C526 .01U/16V_4
PROJECT : ZL9
Quanta Computer Inc.
Size
Document Number
CPU (POWER)-2
Rev
3A
Date: Monday, December 19, 2005
Sheet 3 of 32

FSC	FSB	FSA	CPU	SRC	PCI	
1	0	1	100	100	33	DOTHAN-A 400
0	0	1	133	100	33	DOTHAN-A 533
0	1	1	166	100	33	
0	1	0	200	100	33	
0	0	0	266	100	33	
1	0	0	333	100	33	
1	1	0	400	100	33	
1	1	1	RSVD	100	33	

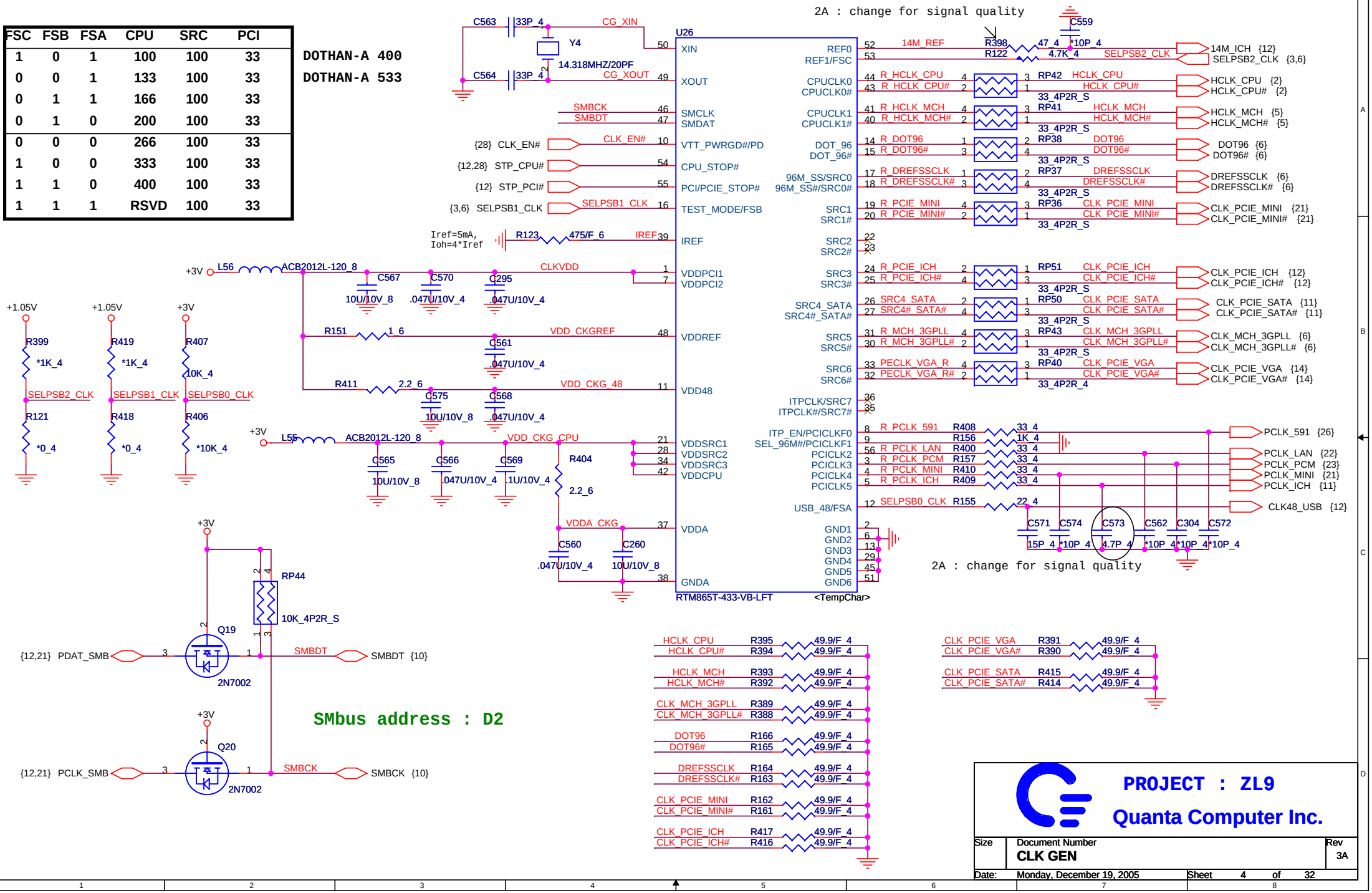

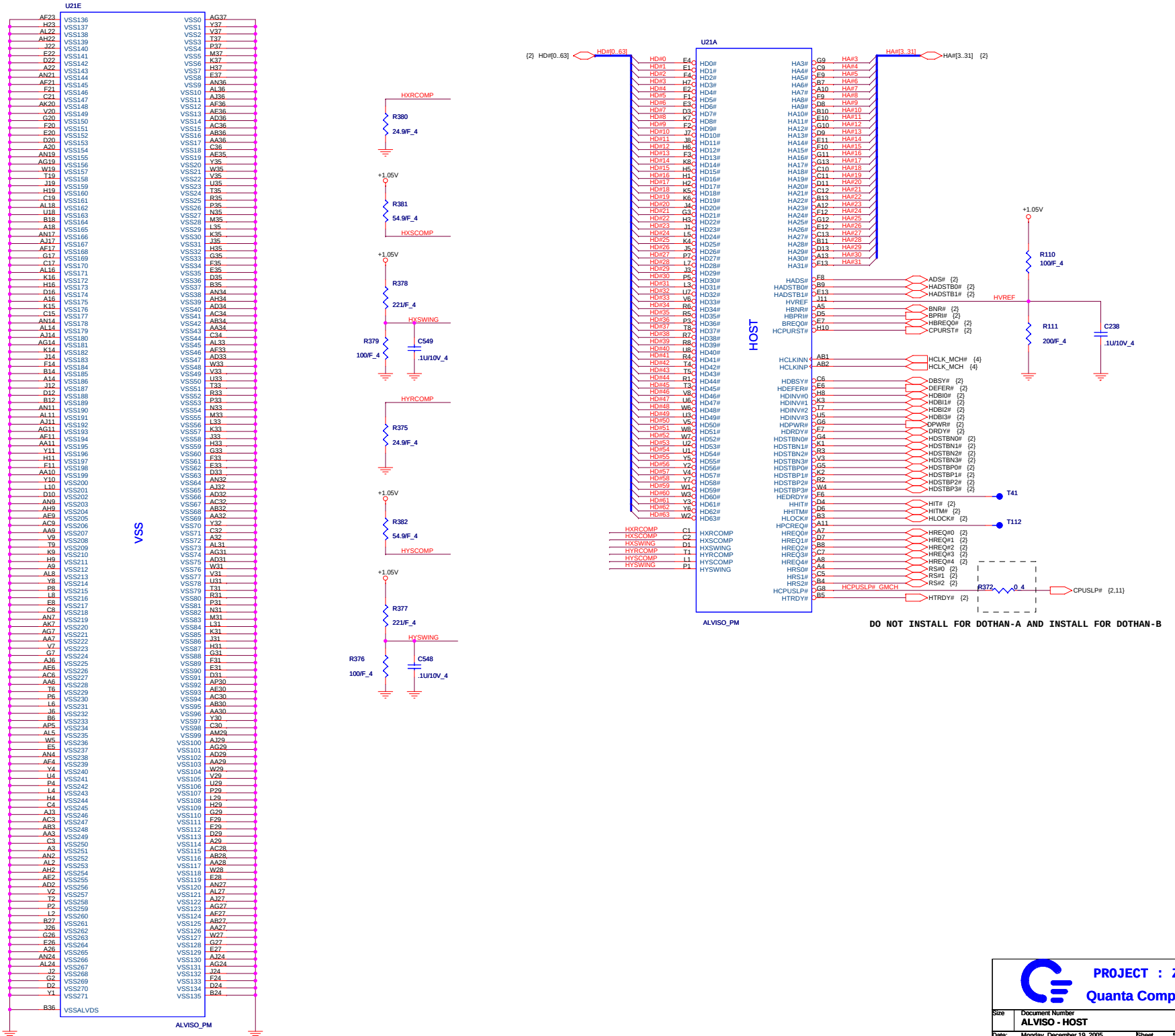

PROJECT : ZL9

Quanta Computer Inc.

Size	Document Number	Rev
	ALVISO - HOST	3A

Date: Monday, December 19, 2005 Sheet 5 of 32

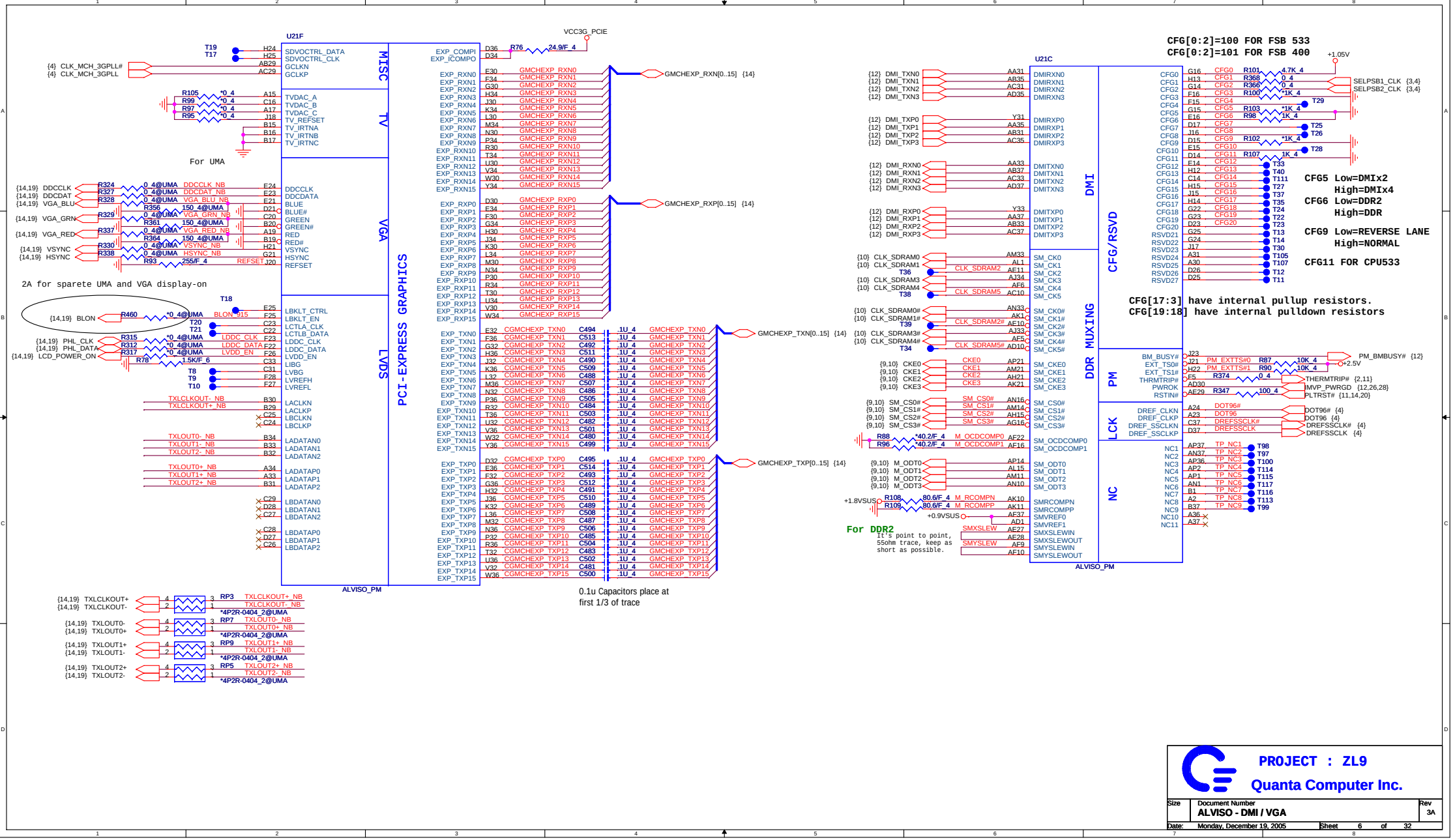
U21F
PCI-EXPRESS GRAPHICS
MISC
TV
VGA
LVDS
SDVOCTRL_DATA
SDVOCTRL_CLK
GCLKN
GCLKP
TVDAC_A
TVDAC_B
TVDAC_C
TV_REFSET
TV_IRTNA
TV_IRTNB
TV_IRTNC
DDCCLK
DDCDATA
BLUE
BLUE#
GREEN
GREEN#
RED
RED#
VSYNC
HSYNC
REFSET
LBKLT_CTRL
LBKLT_EN
LCTLA_CLK
LCTLB_DATA
LDDC_CLK
LDDC_DATA
LVDD_EN
LIBG
LVBG
LVREFH
LVREFL
LACLKN
LACLKP
LBCLKN
LBCLKP
LADATAN0
LADATAN1
LADATAN2
LADATAP0
LADATAP1
LADATAP2
LBDATAN0
LBDATAN1
LBDATAN2
LBDATAP0
LBDATAP1
LBDATAP2
ALVISO_PM
VCC3G_PCIE
For UMA
2A for sparete UMA and VGA display-on
0.1u Capacitors place at first 1/3 of trace
U21C
DMI
DDR MUXING
CFG/RSVD
PM
LCK
NC
ALVISO_PM
CFG[0:2]=100 FOR FSB 533
CFG[0:2]=101 FOR FSB 400
CFG5 Low=DMIx2
High=DMIx4
CFG6 Low=DDR2
High=DDR
CFG9 Low=REVERSE LANE
High=NORMAL
CFG11 FOR CPU533
CFG[17:3] have internal pullup resistors.
CFG[19:18] have internal pulldown resistors
For DDR2
It's point to point, 55ohm trace, keep as short as possible.
PROJECT : ZL9
Quanta Computer Inc.
Size
Document Number
ALVISO - DMI / VGA
Rev
3A
Date: Monday, December 19, 2005
Sheet 6 of 32

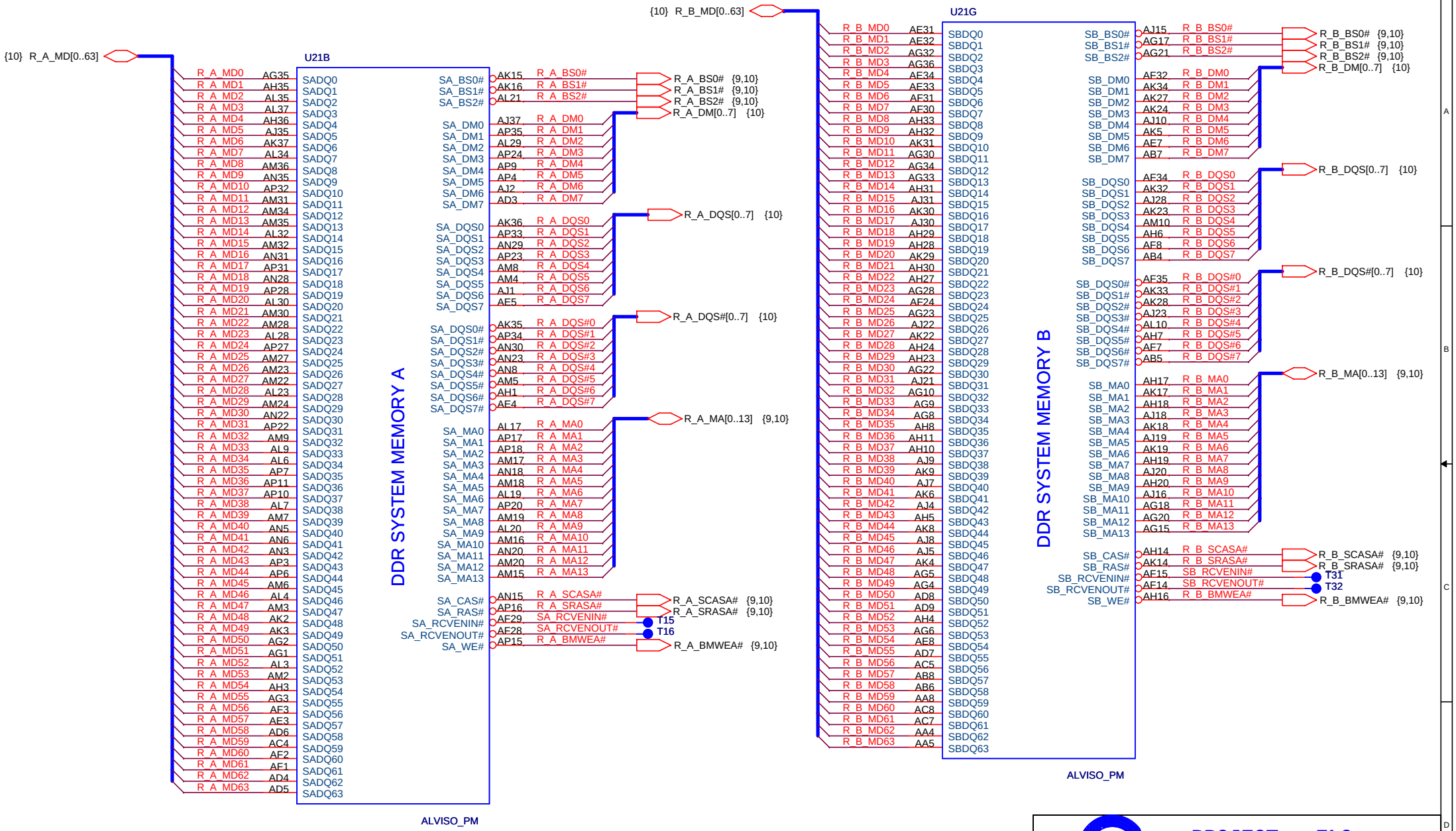

PROJECT : ZL9

Quanta Computer Inc.

Size	Document Number	Rev
	ALVISO - DDRII	3A

Date: Monday, December 19, 2005 Sheet 7 of 32

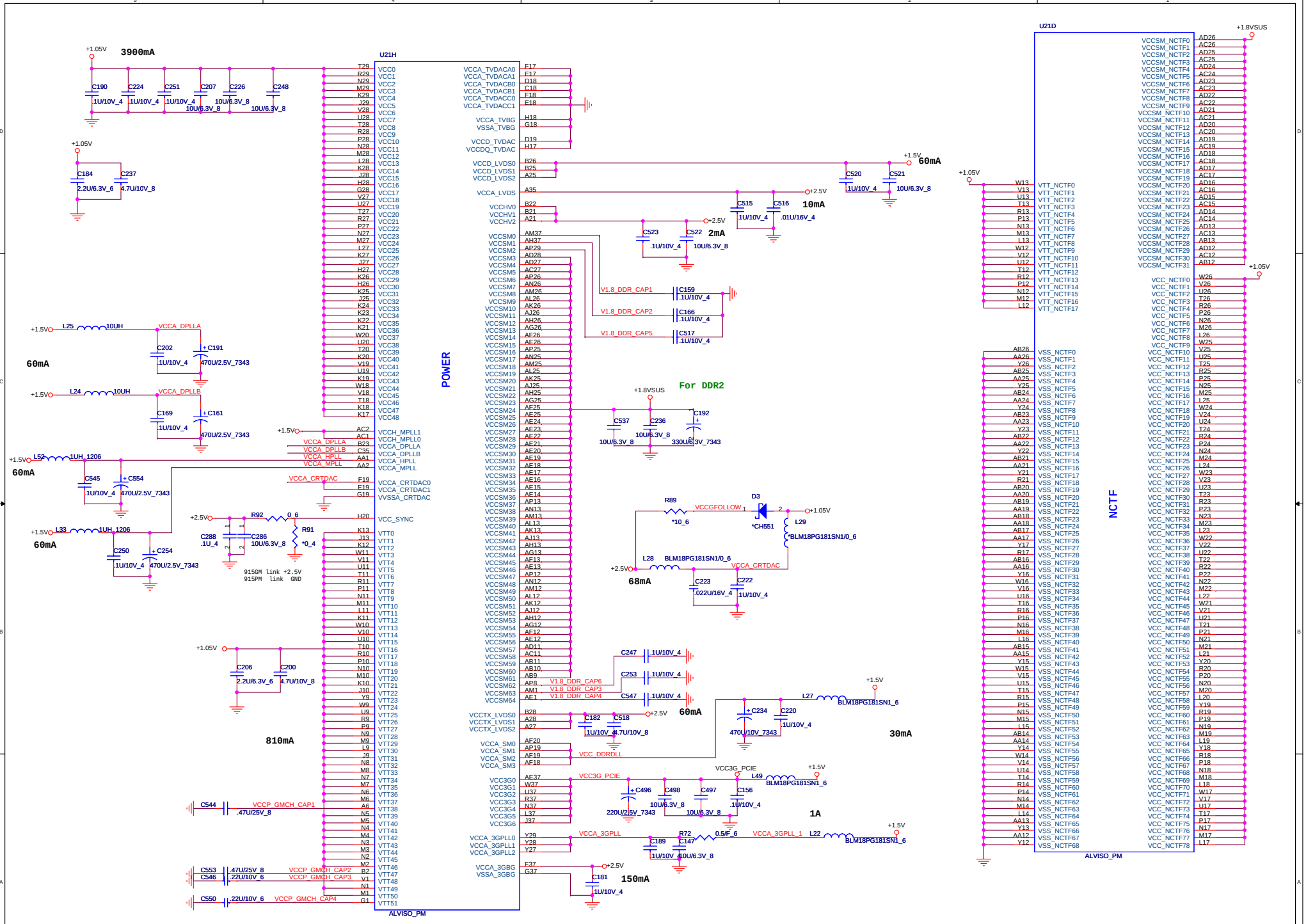

PROJECT : ZL9

Quanta Computer Inc.

Size	Document Number	Rev
	ALVISO - POWER	3A

Date: Monday, December 19, 2005 Sheet 8 of 32

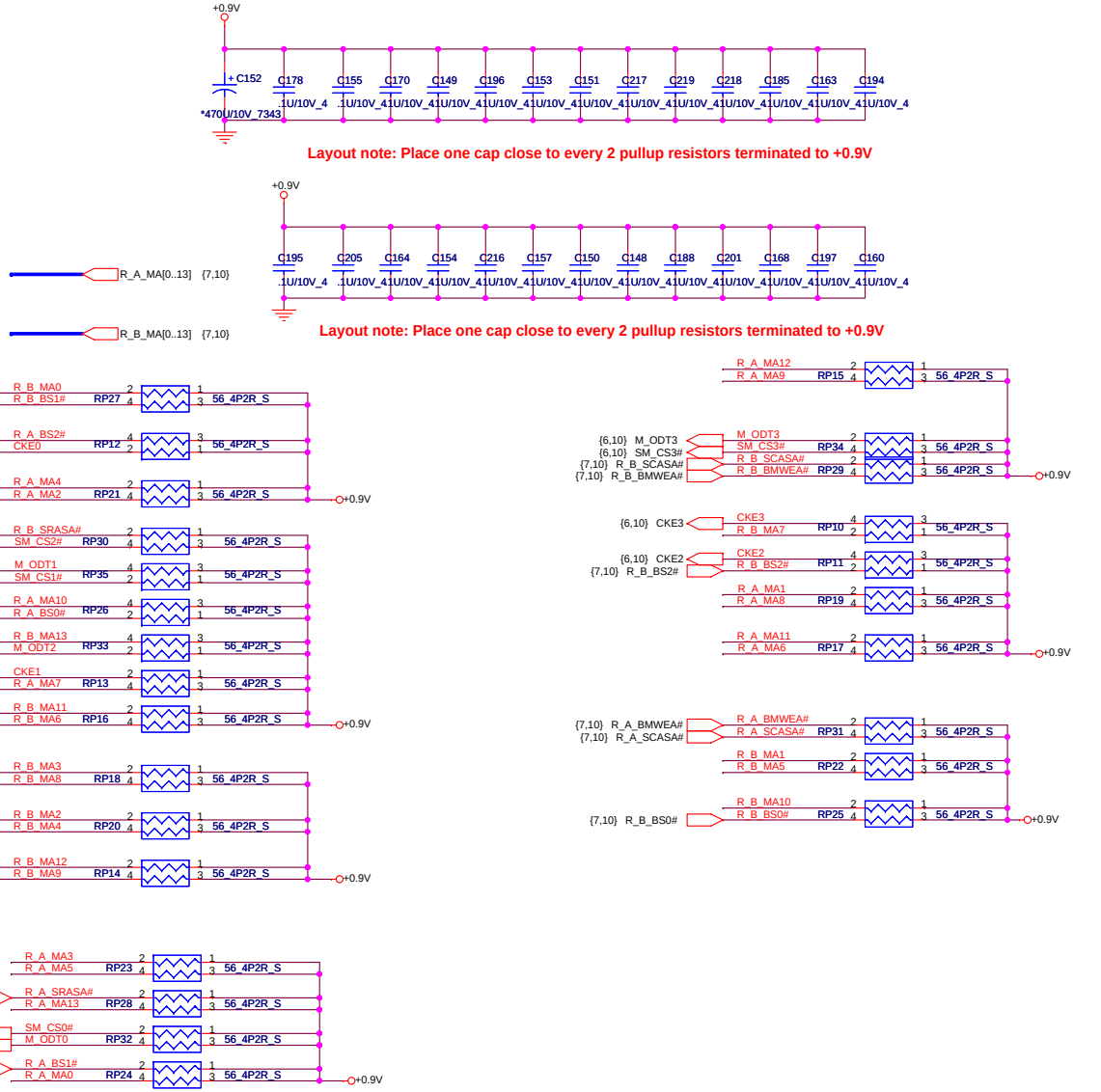

PROJECT : ZL9

Quanta Computer Inc.

Size	Document Number	Rev
	DDR2 TERMINATION	3A

Date: Monday, December 19, 2005 Sheet 9 of 32

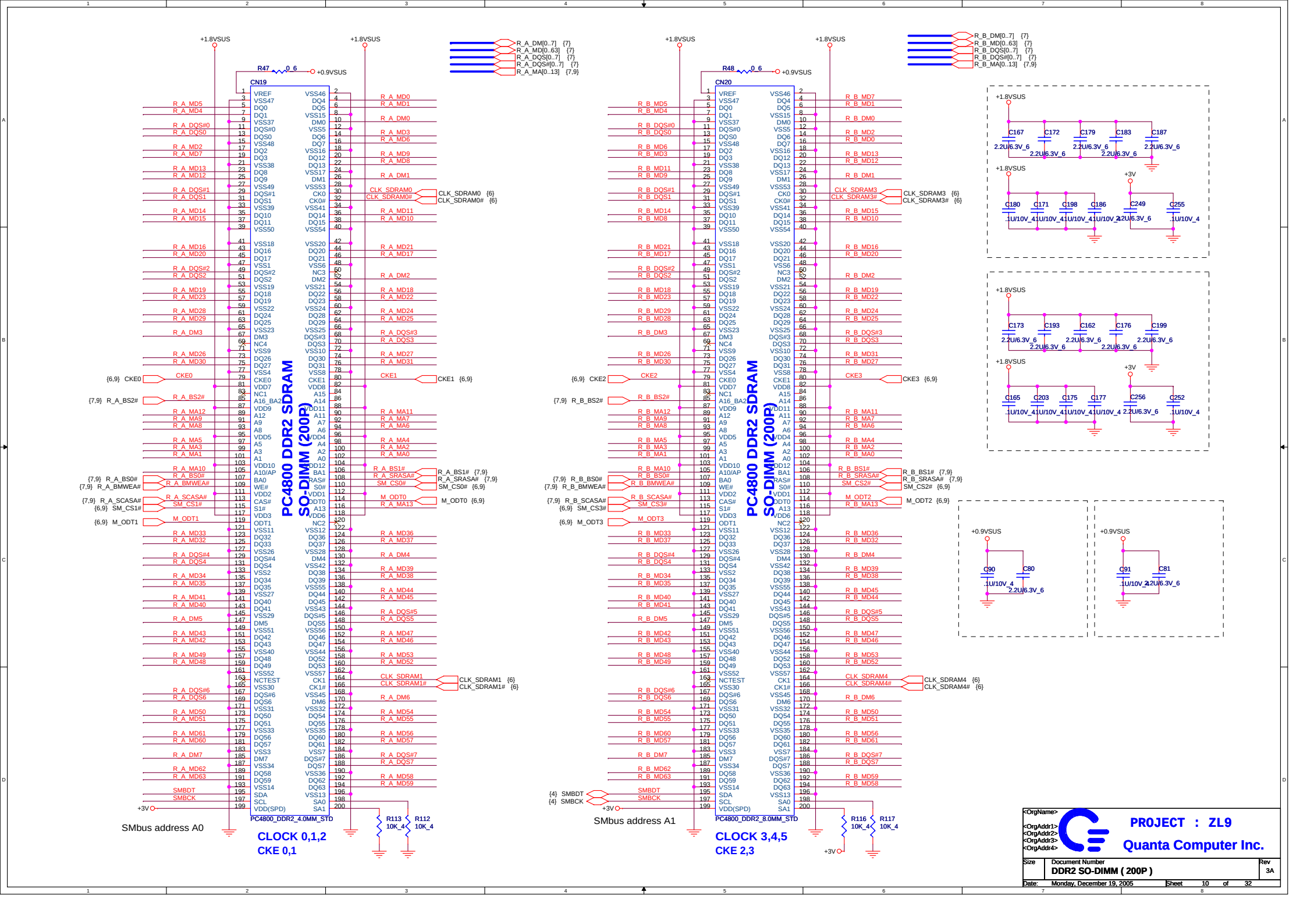
CN19
PC4800 DDR2 SDRAM SO-DIMM (200P)
PC4800_DDR2_4.0MM_STD
R47 0_6
+0.9VSUS
+1.8VSUS
R_A_DM[0..7] {7}
R_A_MD[0..63] {7}
R_A_DQS[0..7] {7}
R_A_DQS#[0..7] {7}
R_A_MA[0..13] {7,9}
CLK_SDRAM0 {6}
CLK_SDRAM0# {6}
CLK_SDRAM1 {6}
CLK_SDRAM1# {6}
CKE0 {6,9}
CKE1 {6,9}
R_A_BS2# {7,9}
R_A_BS0# {7,9}
R_A_BMWEA# {7,9}
R_A_SCASA# {7,9}
SM_CS1# {6,9}
M_ODT1 {6,9}
SM_CS0# {6,9}
M_ODT0 {6,9}
R_A_SRASA# {7,9}
SMBDT
SMBCK
+3V
R113 10K_4
R112 10K_4
SMbus address A0
CLOCK 0,1,2
CKE 0,1
CN20
PC4800 DDR2 SDRAM SO-DIMM (200P)
PC4800_DDR2_8.0MM_STD
R48 0_6
R_B_DM[0..7] {7}
R_B_MD[0..63] {7}
R_B_DQS[0..7] {7}
R_B_DQS#[0..7] {7}
R_B_MA[0..13] {7,9}
CLK_SDRAM3 {6}
CLK_SDRAM3# {6}
CLK_SDRAM4 {6}
CLK_SDRAM4# {6}
CKE2 {6,9}
CKE3 {6,9}
R_B_BS2# {7,9}
R_B_BS0# {7,9}
R_B_BMWEA# {7,9}
R_B_SCASA# {7,9}
SM_CS3# {6,9}
M_ODT3 {6,9}
R_B_SRASA# {7,9}
SM_CS2# {6,9}
M_ODT2 {6,9}
{4} SMBDT
{4} SMBCK
R116 10K_4
R117 10K_4
SMbus address A1
CLOCK 3,4,5
CKE 2,3
C167 2.2U/6.3V_6
C172 2.2U/6.3V_6
C179 2.2U/6.3V_6
C183 2.2U/6.3V_6
C187 2.2U/6.3V_6
C180 .1U/10V_4
C171 1U/10V_4
C198 1U/10V_4
C186 1U/10V_4
C249 2.2U/6.3V_6
C255 .1U/10V_4
C173 2.2U/6.3V_6
C193 2.2U/6.3V_6
C162 2.2U/6.3V_6
C176 2.2U/6.3V_6
C199 2.2U/6.3V_6
C165 .1U/10V_4
C203 1U/10V_4
C175 1U/10V_4
C177 1U/10V_4
C256 2.2U/6.3V_6
C252 .1U/10V_4
C90 .1U/10V_4
C80 2.2U/6.3V_6
C91 .1U/10V_4
C81 2.2U/6.3V_6
<OrgName>
<OrgAddr1>
<OrgAddr2>
<OrgAddr3>
<OrgAddr4>
PROJECT : ZL9
Quanta Computer Inc.
Size
Document Number
DDR2 SO-DIMM (200P)
Rev
3A
Date: Monday, December 19, 2005
Sheet 10 of 32

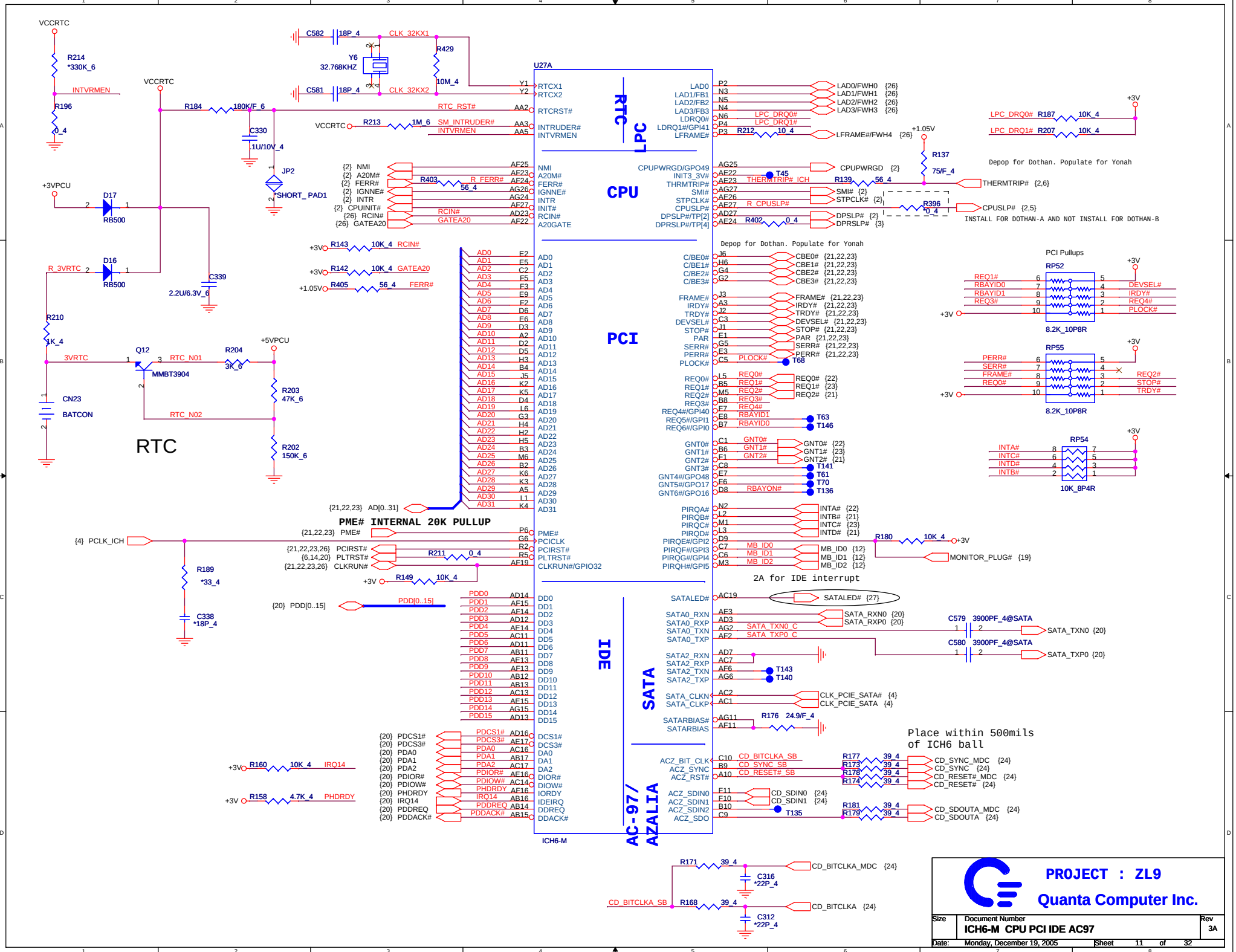
U27A
RTC
LPC
CPU
PCI
IDE
SATA
AC-97/ AZALIA
ICH6-M
RTC
PME# INTERNAL 20K PULLUP
2A for IDE interrupt
Place within 500mils of ICH6 ball
Depop for Dothan. Populate for Yonah
INSTALL FOR DOTHAN-A AND NOT INSTALL FOR DOTHAN-B
PCI Pullups
PROJECT : ZL9
Quanta Computer Inc.
Size
Document Number
ICH6-M CPU PCI IDE AC97
Rev
3A
Date: Monday, December 19, 2005
Sheet 11 of 32

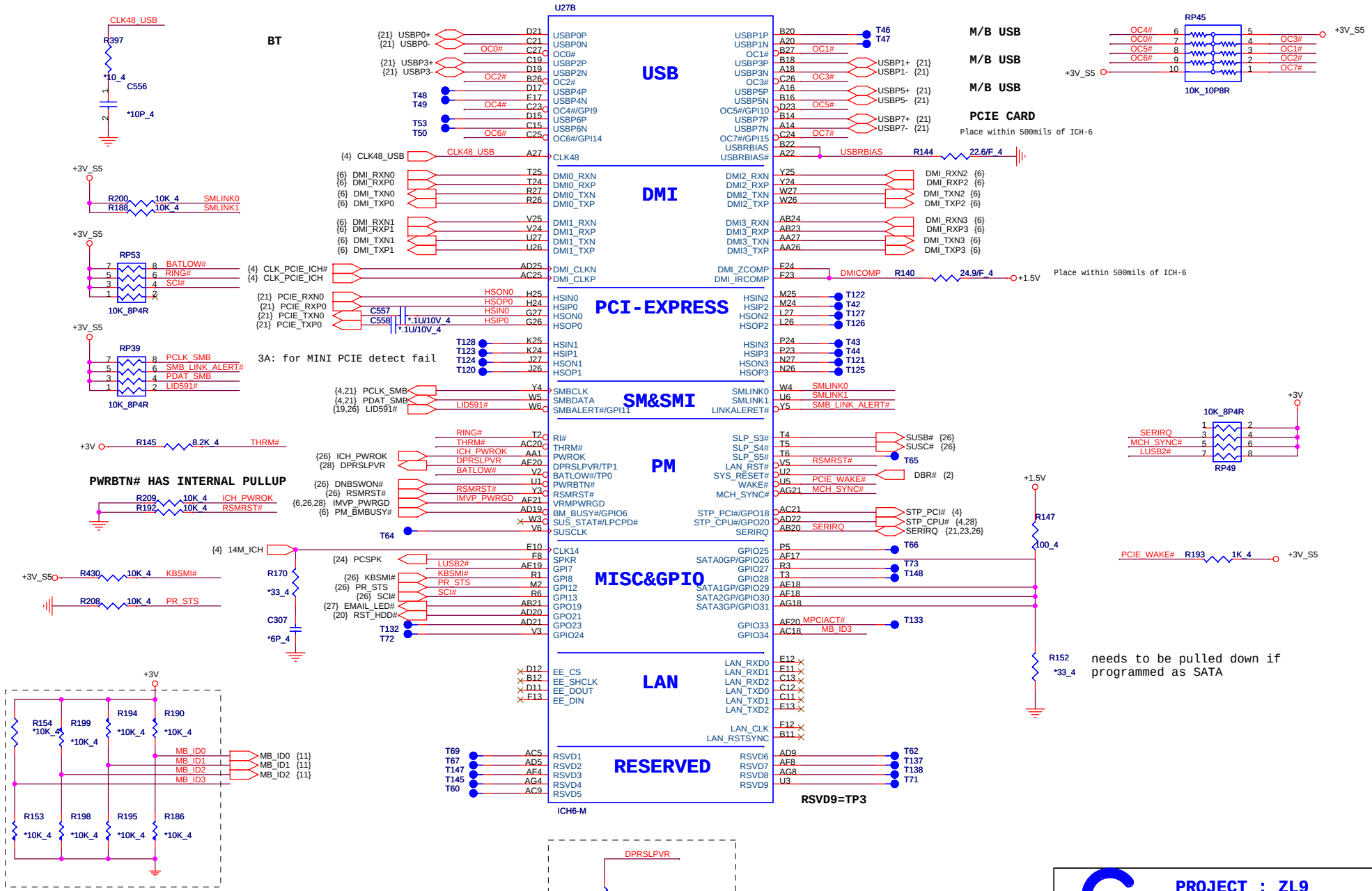

PROJECT : ZL9			
Quanta Computer Inc.			
Size	Document Number		Rev
	ICH6-M USB DMI LPC		3A
Date: Monday, December 19, 2005	Sheet 12 of 32		

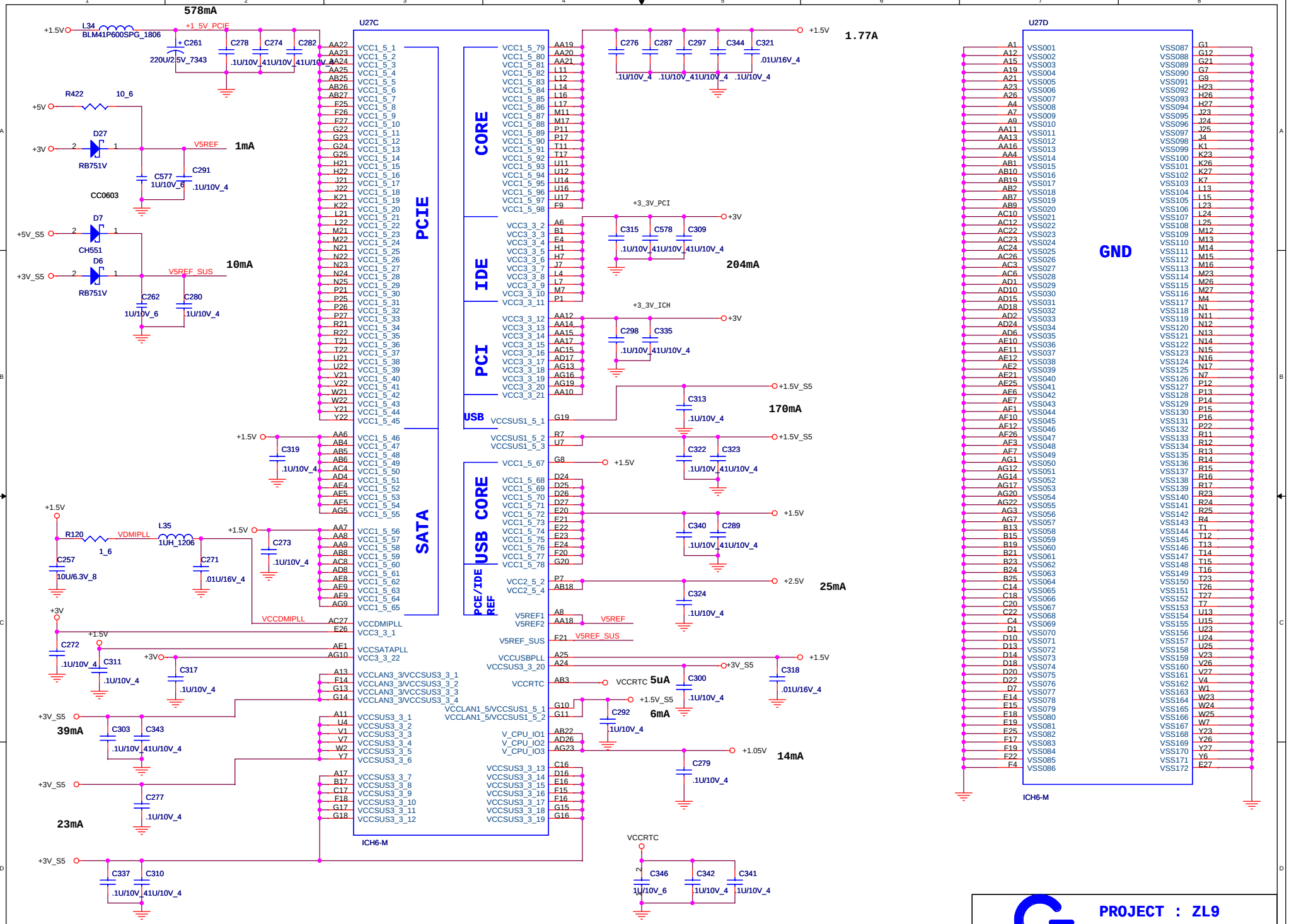

PROJECT : ZL9

Quanta Computer Inc.

Size	Document Number	Rev
	ICH6-M POWER	3A

Date: Monday, December 19, 2005 Sheet 13 of 32

ATI M52T (23X 23)

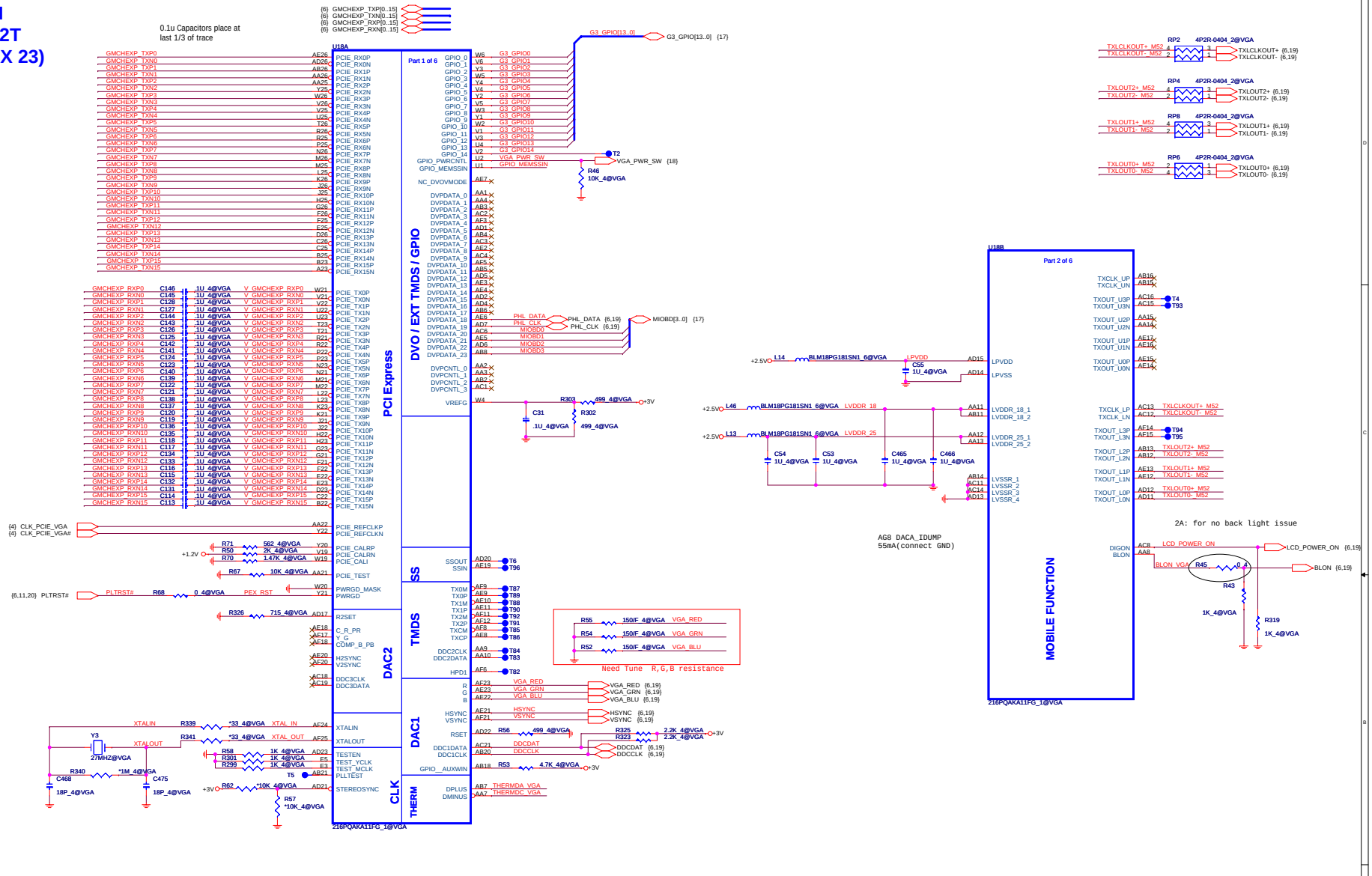

MEMORY CLOCK SPREAD SPECTRUM

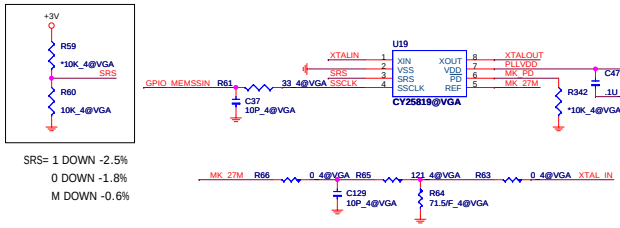

Thermal Sensor for Graphic

SLAVE ADDRESS: 9A

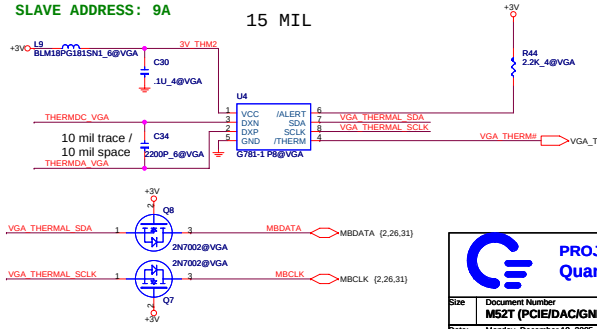

PROJECT : ZL9
Quanta Computer Inc.

Size	Document Number	Rev
	M52T (PCIE/DAC/GND)	3A

Date: Monday, December 19, 2005 Sheet 14 of 32

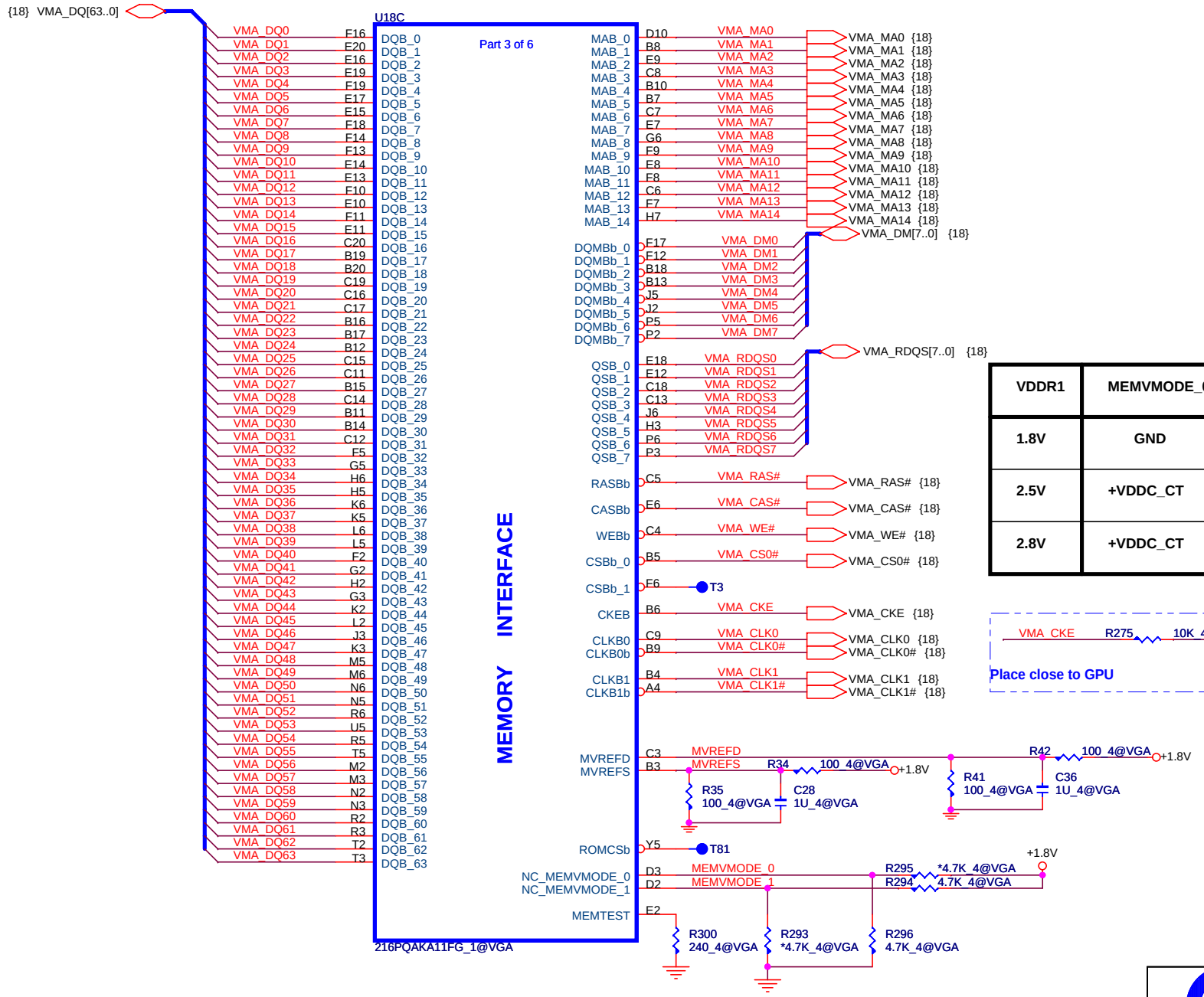

VDDR1	MEMVMODE_0	MEMVMODE_1
1.8V	GND	+VDDC_CT
2.5V	+VDDC_CT	GND
2.8V	+VDDC_CT	+VDDC_CT

PROJECT : ZL9
Quanta Computer Inc.

Size	Document Number	Rev
	M52T (MEMORY A/B)	3A

Date: Monday, December 19, 2005 Sheet 15 of 32

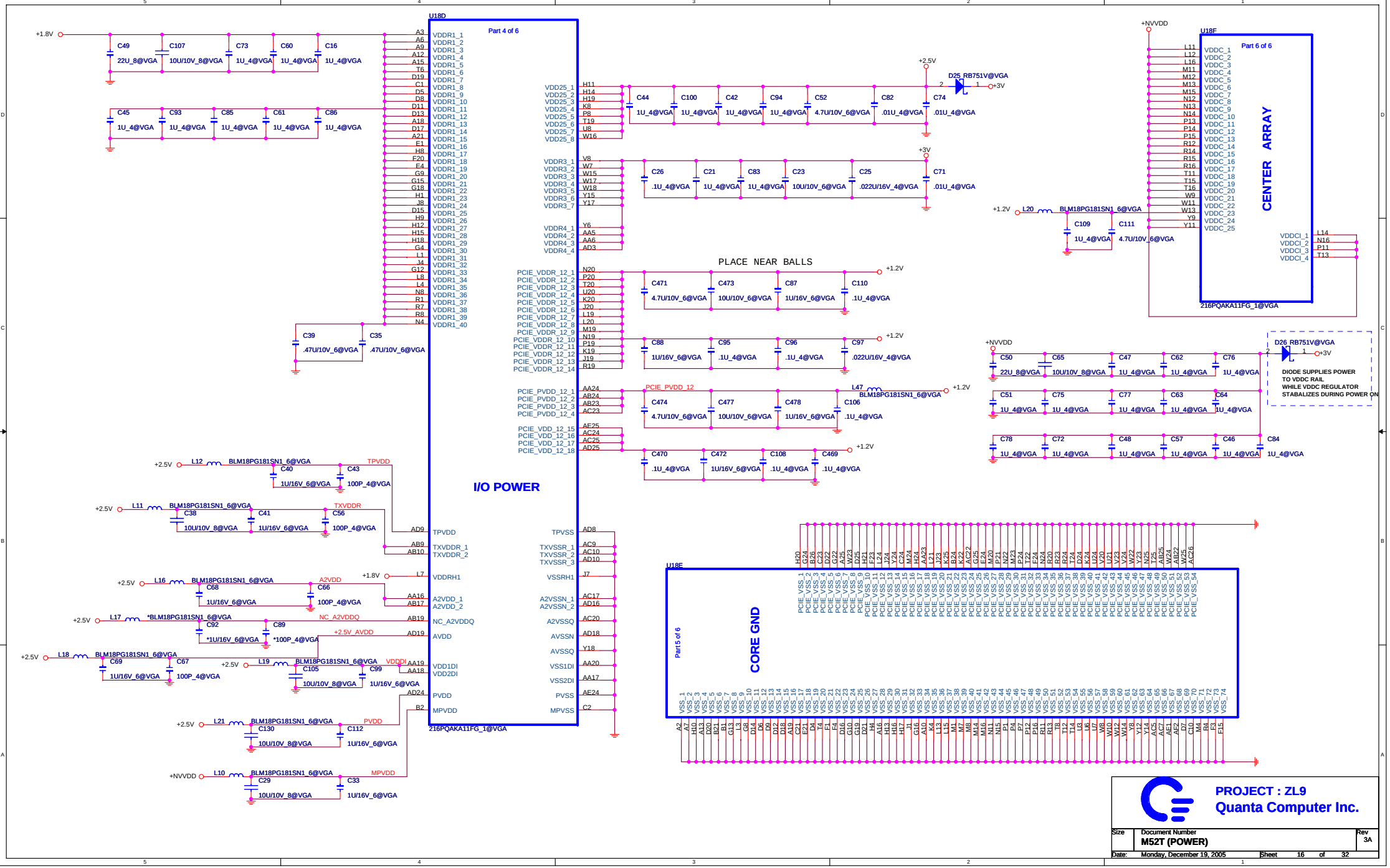
U18D
Part 4 of 6
I/O POWER
216PQAKA11FG_1@VGA
U18F
Part 6 of 6
CENTER ARRAY
216PQAKA11FG_1@VGA
U18E
Part 5 of 6
CORE GND
PLACE NEAR BALLS
D25 RB751V@VGA
D26 RB751V@VGA
DIODE SUPPLIES POWER TO VDDC RAIL WHILE VDDC REGULATOR STABALIZES DURING POWER ON
+1.8V
+2.5V
+3V
+1.2V
+NVVDD
TPVDD
TXVDDR
A2VDD
NC_A2VDDQ
+2.5V_AVDD
VDDDI
PVDD
MPVDD
PCIE_PVDD_12
PROJECT : ZL9
Quanta Computer Inc.
Size
Document Number
M52T (POWER)
Rev
3A
Date: Monday, December 19, 2005
Sheet 16 of 32

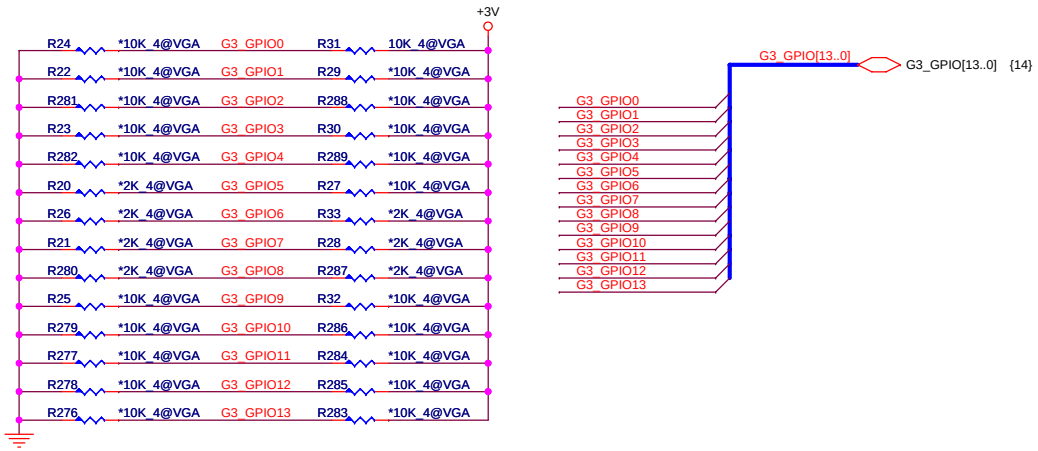

STRAPS	PIN	DESCRIPTION	ASIC DEFAULT
TX_PWRS_ENB	G3_GPIO0	FULL SWING	1
TX_DEEMPH_EN	G3_GPIO1	TRANSMITTER DE-EMPHASIS ENABLE - TX DE-EMPHASIS DISABLED FOR MOBILE	0
DEBUG_ACCESS	G3_GPIO4	Strap to set the debug muxes to bring out DEBUG signals even if registers are inaccessible.	0
FORCE COMPLIANCE	G3_GPIO8	**Force chip to get to compliance state queckly for tester pruposes**	0
ROMIDCFG(3:0)	G3_GPIO(9,13,12,11)	**128M** **256M** **64M** **Recerved**	**0000** **0010** **0100** **0110**

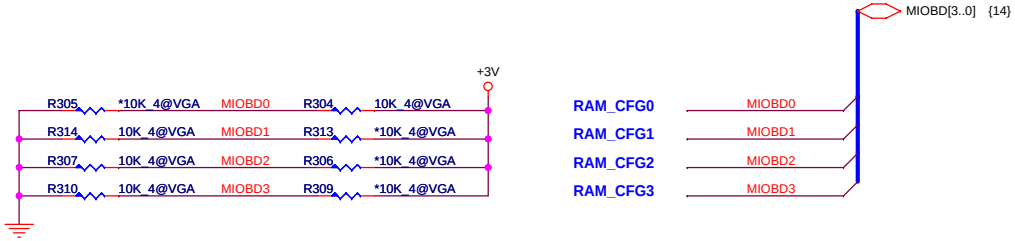

M52T VRAM Configuration Table

RAM_CFG[3:0]	DESCRIPTION
0000	DDR2 , 16Mx16 , 2pcs (64M)
0001	DDR2 , 16Mx16 , 4pcs (128M)
0010	DDR2 ,32Mx16 , 2pcs (128M)
0011	DDR2 ,32Mx16 , 4pcs (256M)
others	Reserved

MULTIFUNC(1:0)	LCDDATA(17:16)	Multi-function device select **00 - single function device.** 01 - two function device. No AGP in either function 10 - two function device. AGP only in function 0 11 - two function device. AGP in both functions If BUSCFG pin based straps are set to PCI, then AGP will not be enabled in any function.	00
VIP_DEVICE	LCDDATA(20)	Indicates if any slave VIP host devices drove this low during reset. 0 - Slave VIP host port devices present **1 - No slave VIP host port devices reporting presence during reset**	0
DWNGRD	LCDDATA(21)	0 - Device remain a workstation grade part. 1 - Part is downgraded to a Normal part	0 (internal pull-down)

PROJECT : ZL9
Quanta Computer Inc.

Size	Document Number	Rev
	M52T (STRAP/MISC)	3A

Date: Monday, December 19, 2005 Sheet 17 of 32

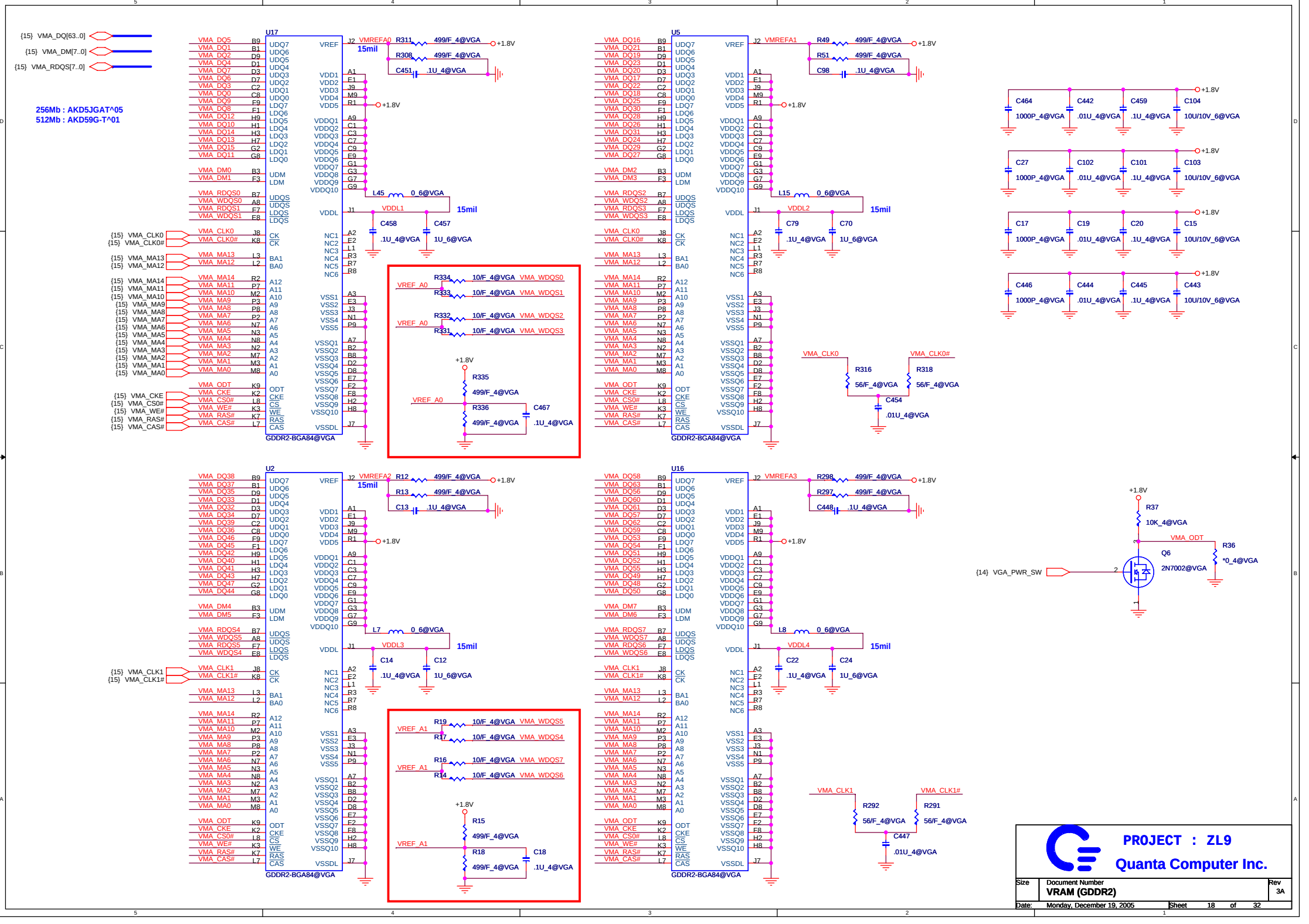
{15} VMA_DQ[63..0]
{15} VMA_DM[7..0]
{15} VMA_RDQS[7..0]
256Mb : AKD5JGAT^05
512Mb : AKD59G-T^01
U17
U5
U2
U16
GDDR2-BGA84@VGA
VMREFA0
VMREFA1
VMREFA2
VMREFA3
15mil
VDDL1
VDDL2
VDDL3
VDDL4
L45 0_6@VGA
L15 0_6@VGA
L7 0_6@VGA
L8 0_6@VGA
C458 .1U_4@VGA
C457 1U_6@VGA
C79 .1U_4@VGA
C70 1U_6@VGA
C14 .1U_4@VGA
C12 1U_6@VGA
C22 .1U_4@VGA
C24 1U_6@VGA
R311 499/F_4@VGA
R308 499/F_4@VGA
C451 .1U_4@VGA
R49 499/F_4@VGA
R51 499/F_4@VGA
C98 .1U_4@VGA
R12 499/F_4@VGA
R13 499/F_4@VGA
C13 .1U_4@VGA
R298 499/F_4@VGA
R297 499/F_4@VGA
C448 .1U_4@VGA
+1.8V
VREF_A0
R334 10/F_4@VGA VMA_WDQS0
R333 10/F_4@VGA VMA_WDQS1
R332 10/F_4@VGA VMA_WDQS2
R331 10/F_4@VGA VMA_WDQS3
R335 499/F_4@VGA
R336 499/F_4@VGA
C467 .1U_4@VGA
VREF_A1
R19 10/F_4@VGA VMA_WDQS5
R17 10/F_4@VGA VMA_WDQS4
R16 10/F_4@VGA VMA_WDQS7
R14 10/F_4@VGA VMA_WDQS6
R15 499/F_4@VGA
R18 499/F_4@VGA
C18 .1U_4@VGA
VMA_CLK0
VMA_CLK0#
R316 56/F_4@VGA
R318 56/F_4@VGA
C454 .01U_4@VGA
VMA_CLK1
VMA_CLK1#
R292 56/F_4@VGA
R291 56/F_4@VGA
C447 .01U_4@VGA
C464 1000P_4@VGA
C442 .01U_4@VGA
C459 .1U_4@VGA
C104 10U/10V_6@VGA
C27 1000P_4@VGA
C102 .01U_4@VGA
C101 .1U_4@VGA
C103 10U/10V_6@VGA
C17 1000P_4@VGA
C19 .01U_4@VGA
C20 .1U_4@VGA
C15 10U/10V_6@VGA
C446 1000P_4@VGA
C444 .01U_4@VGA
C445 .1U_4@VGA
C443 10U/10V_6@VGA
R37 10K_4@VGA
VMA_ODT
R36 *0_4@VGA
Q6 2N7002@VGA
{14} VGA_PWR_SW
PROJECT : ZL9
Quanta Computer Inc.
Size
Document Number
VRAM (GDDR2)
Rev 3A
Date: Monday, December 19, 2005
Sheet 18 of 32

CRT PORT

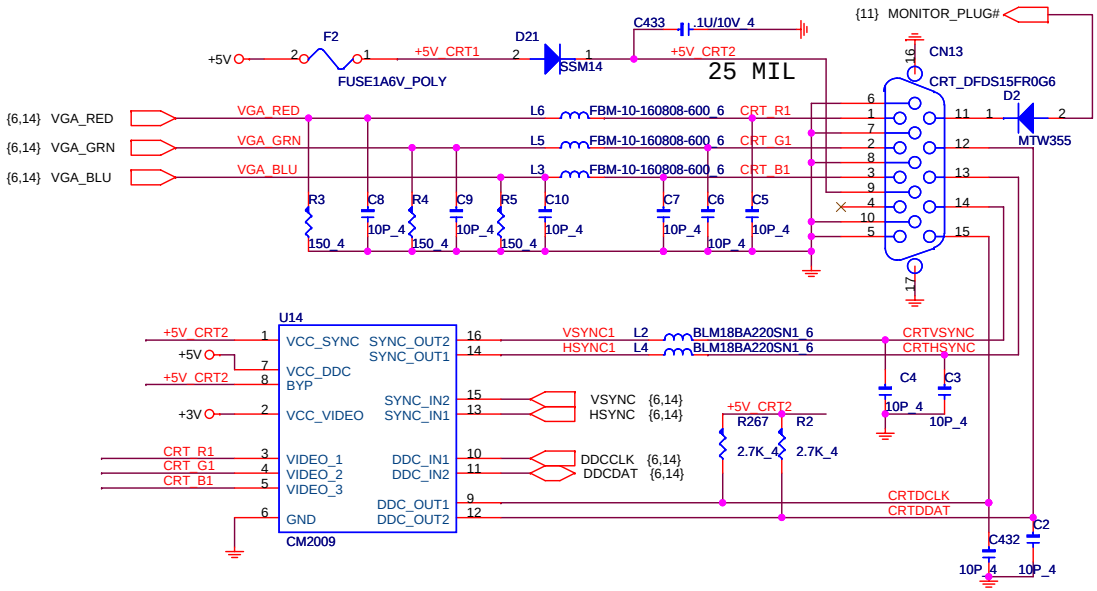

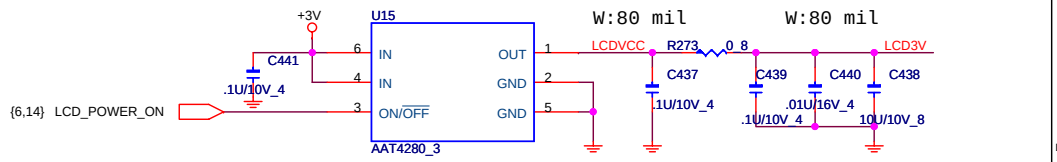

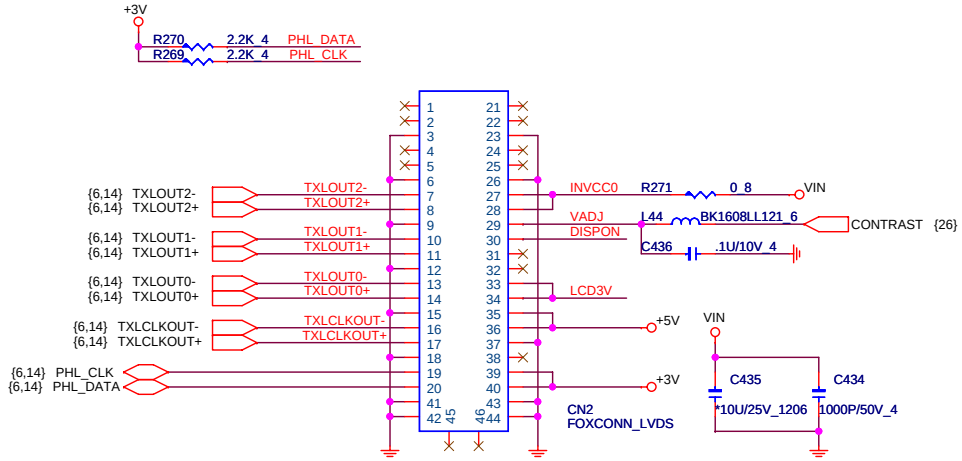

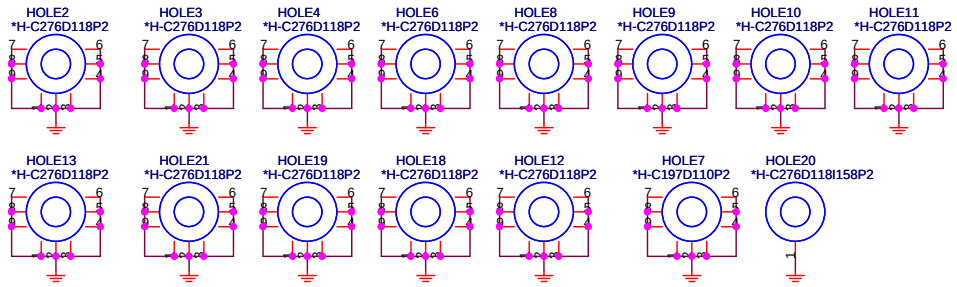

PCIE-CARD NUT

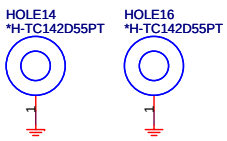

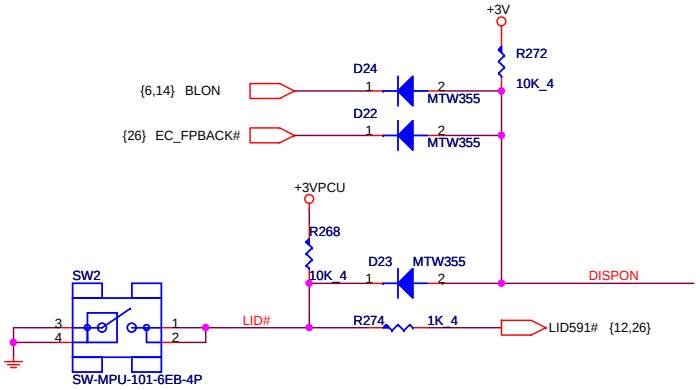

MDC1.5 NUT NB HEATSINK NUT LED/B NUT CPU NUT

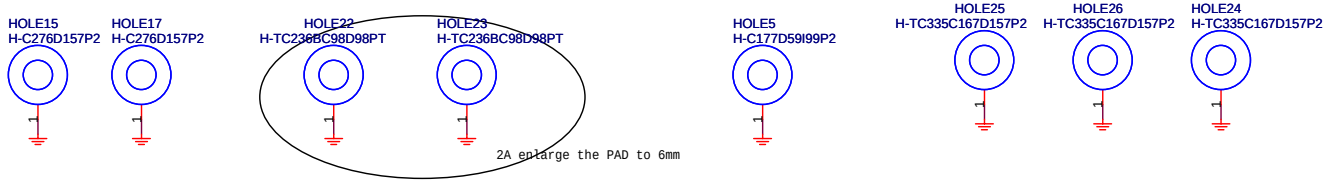

2A enlarge the PAD to 6mm

Lid Switch

PROJECT : ZL9

Quanta Computer Inc.

Size	Document Number	Rev
	LVDS,VGA Ports, LID, & HOLES	3A

Date: Monday, December 19, 2005 Sheet 19 of 32

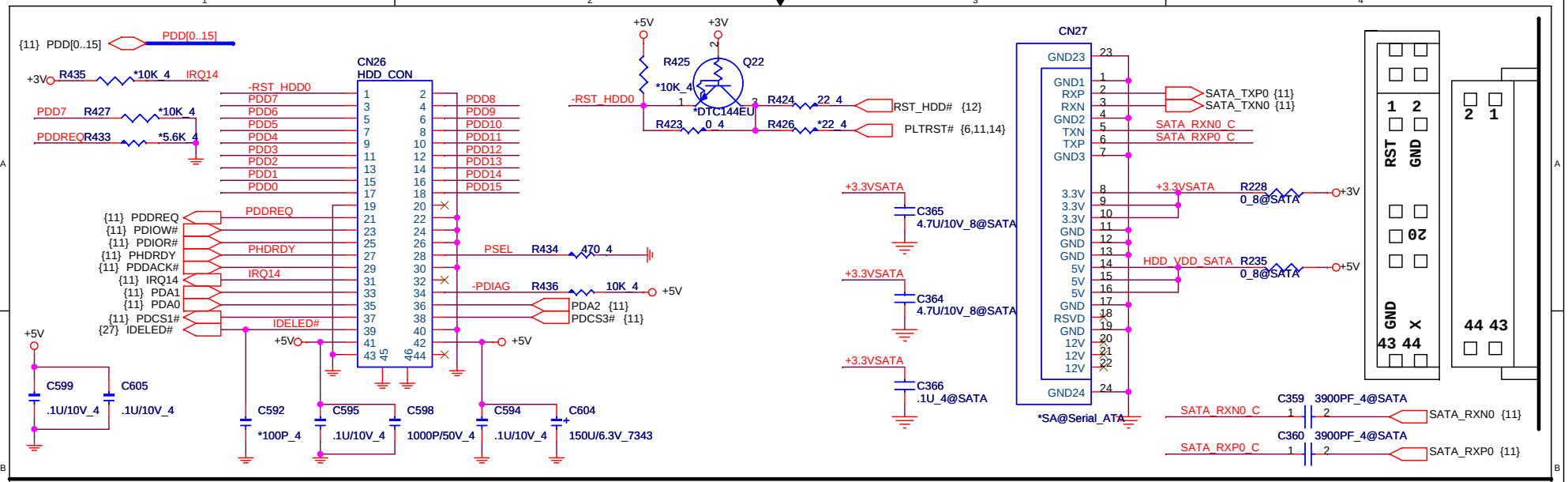

ODD Connector

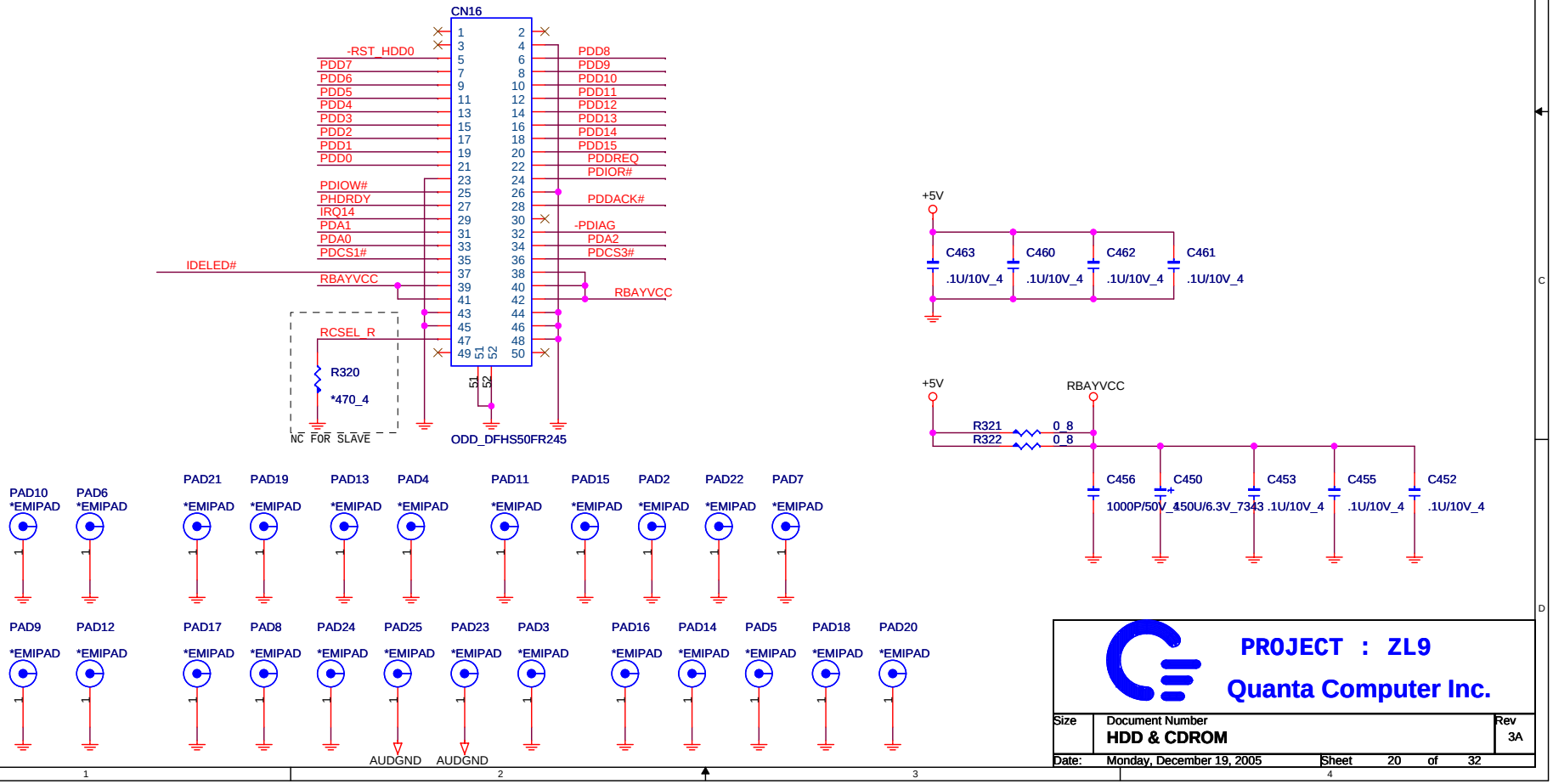

PROJECT : ZL9

Quanta Computer Inc.

Size	Document Number	Rev
	HDD & CDROM	3A
Date: Monday, December 19, 2005	Sheet 20 of 32	

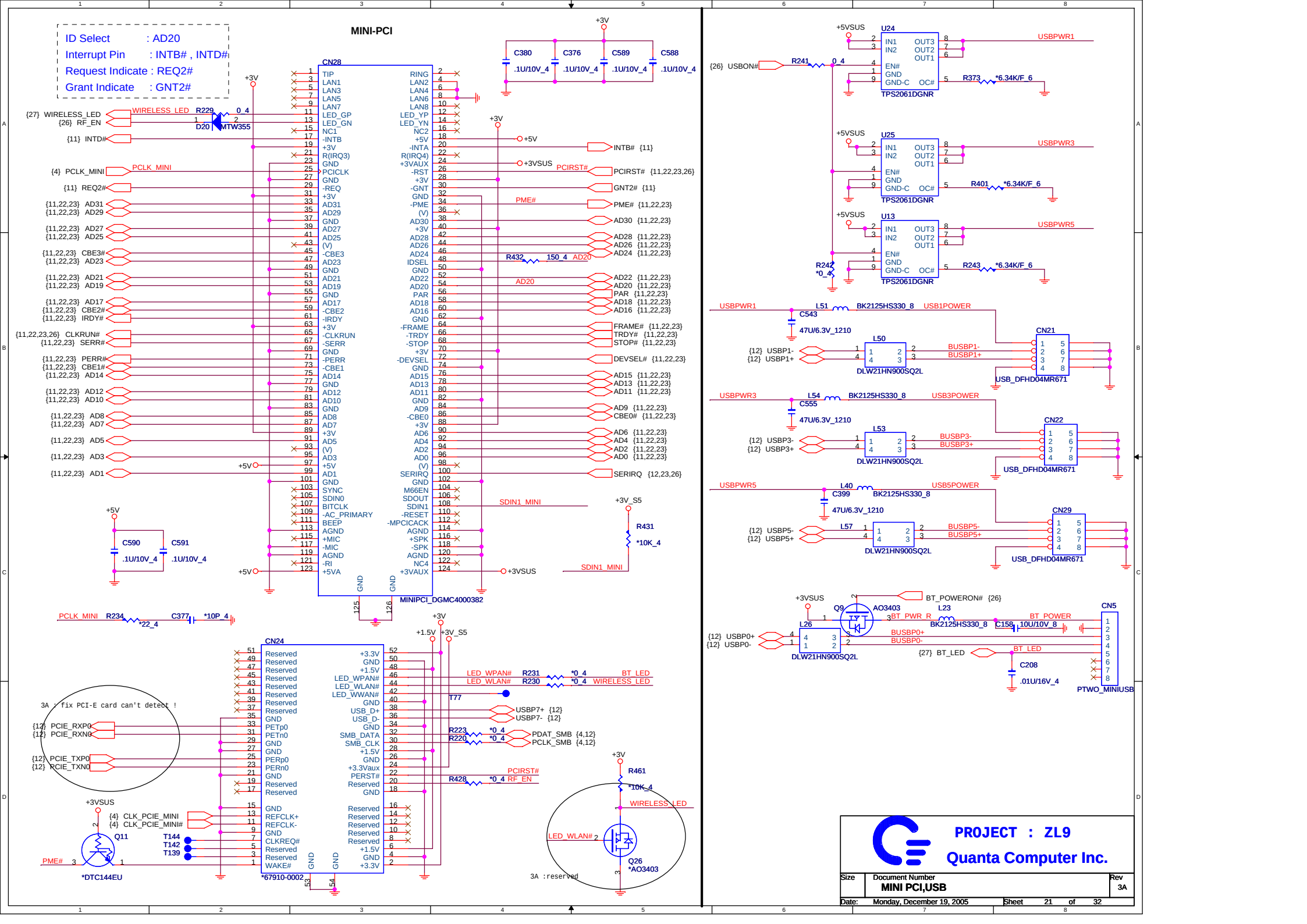
MINI-PCI
ID Select : AD20
Interrupt Pin : INTB# , INTD#
Request Indicate : REQ2#
Grant Indicate : GNT2#
CN28
MINIPCI_DGMC4000382
CN24
*67910-0002
U24
U25
U13
TPS2061DGNR
USBPWR1
USBPWR3
USBPWR5
USB1POWER
USB3POWER
USB5POWER
CN21
CN22
CN29
USB_DFHD04MR671
DLW21HN900SQ2L
BK2125HS330_8
AO3403
CN5
PTWO_MINIUSB
PROJECT : ZL9
Quanta Computer Inc.
Size
Document Number
MINI PCI,USB
Rev
3A
Date: Monday, December 19, 2005
Sheet 21 of 32

ID Select : AD24
Interrupt Pin : INTA#
Request Indicate : REQ0#
Grant Indicate : GNT0#

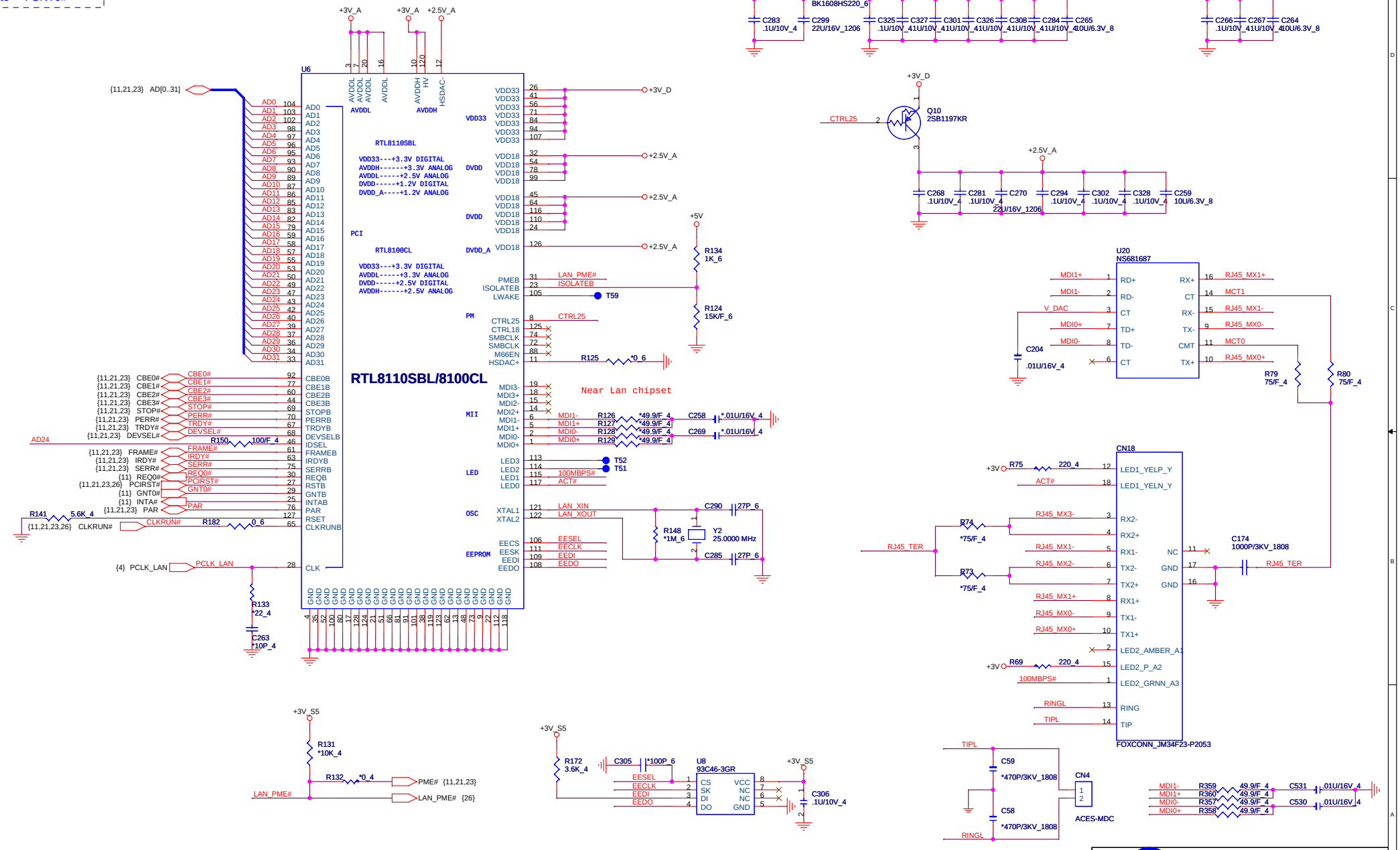

2A : modify for ESD issue

PROJECT : ZL9

Quanta Computer Inc.

Size	Document Number	Rev
	LAN RTL8110SBL/8100CL	3A

Date: Monday, December 19, 2005 Sheet 22 of 32

ID Select	: AD17
Interrupt Pin	: INTC#
Request Indicate	: REQ1#
Grant Indicate	: GNT1#

CARDBUS SLOT

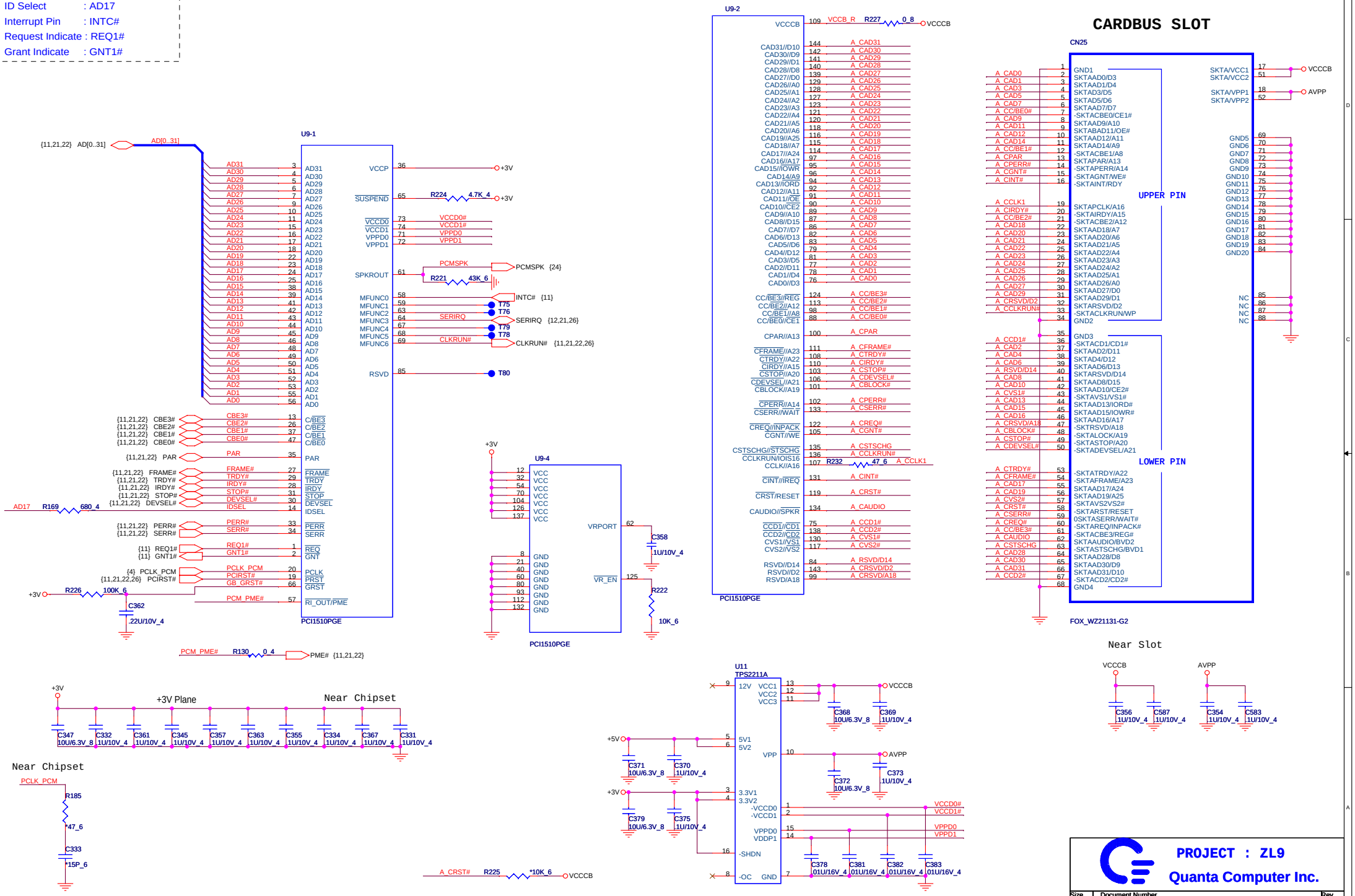

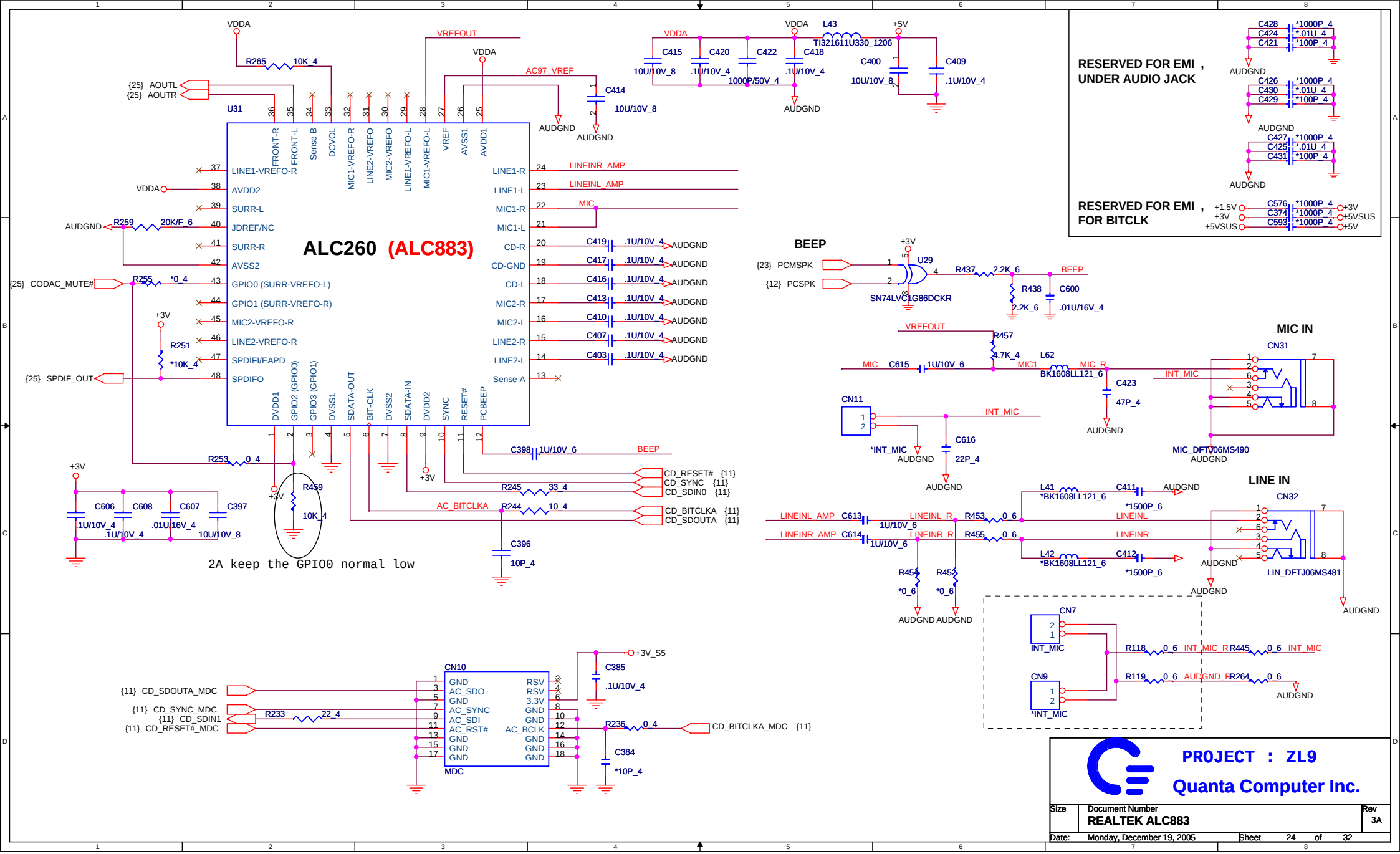

PROJECT : ZL9

Quanta Computer Inc.

Size	Document Number	Rev
	REALTEK ALC883	3A

Date: Monday, December 19, 2005 Sheet 24 of 32

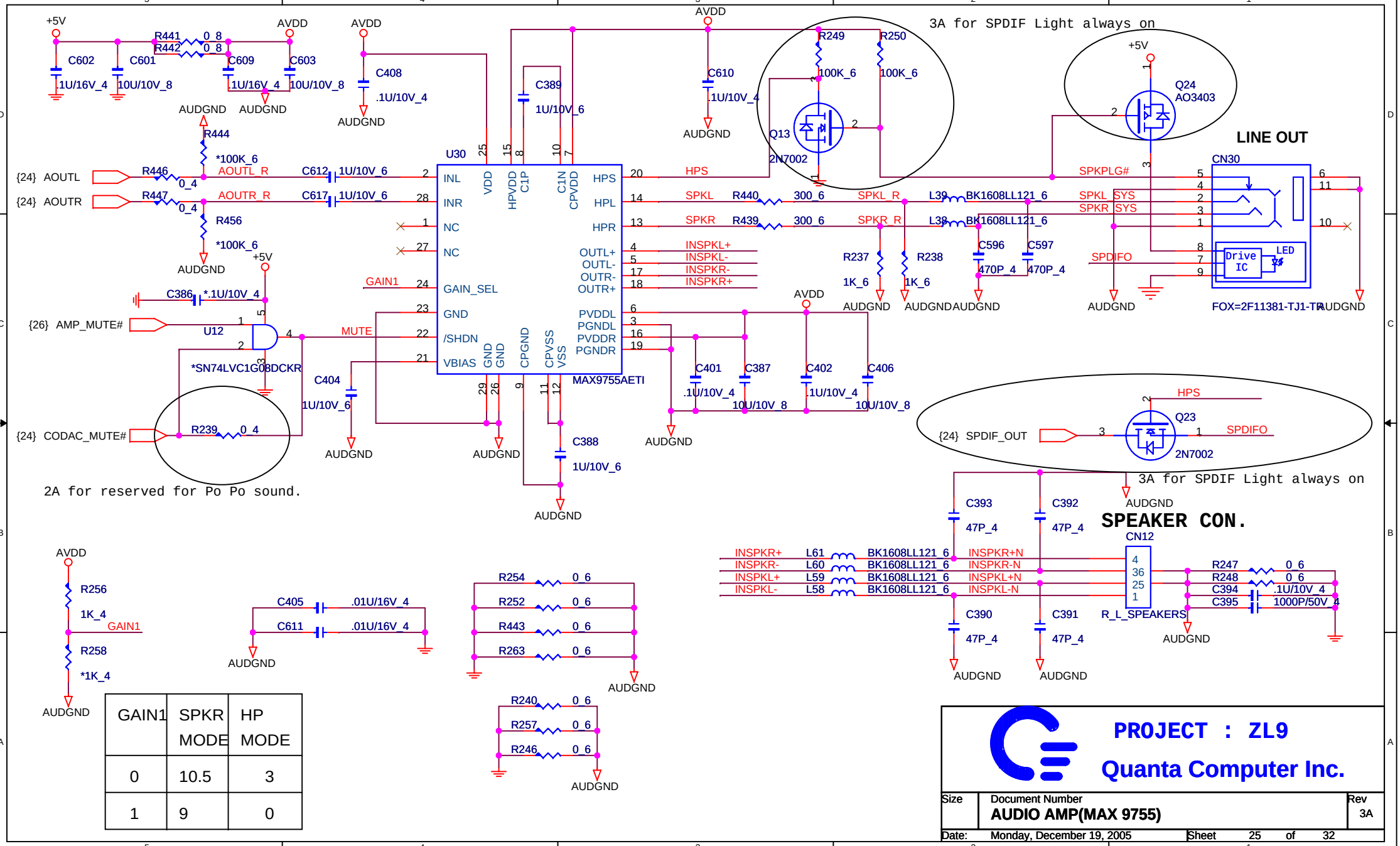

GAIN1	SPKR MODE	HP MODE
0	10.5	3
1	9	0

PROJECT : ZL9

Quanta Computer Inc.

Size	Document Number	Rev
	AUDIO AMP(MAX 9755)	3A

Date: Monday, December 19, 2005 Sheet 25 of 32

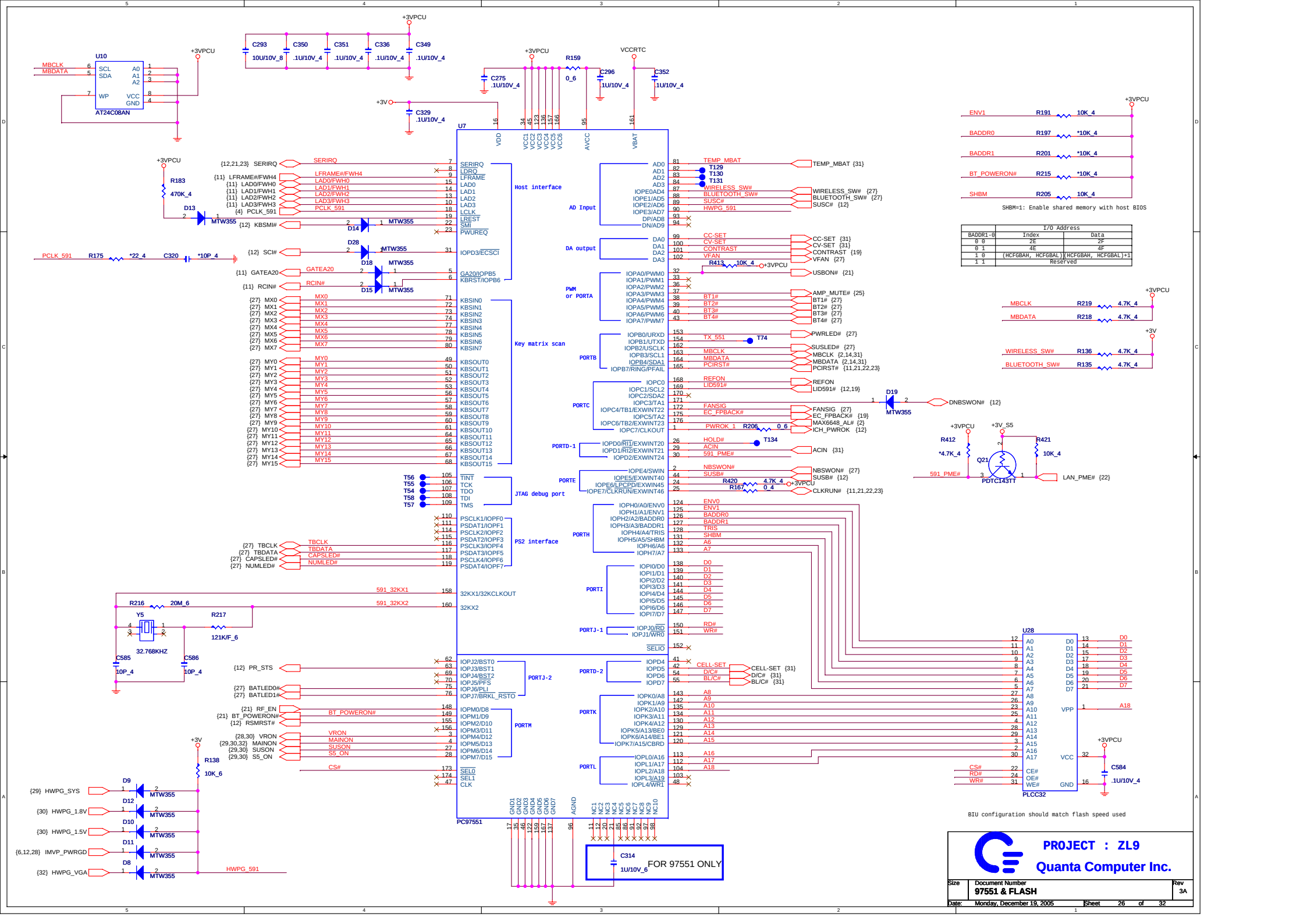

BADDR1-0	I/O Address	
	Index	Data
0 0	2E	2F
0 1	4E	4F
1 0	(HCFGBAH, HCFGBAL)	(HCFGBAH, HCFGBAL)+1
1 1	Reserved	

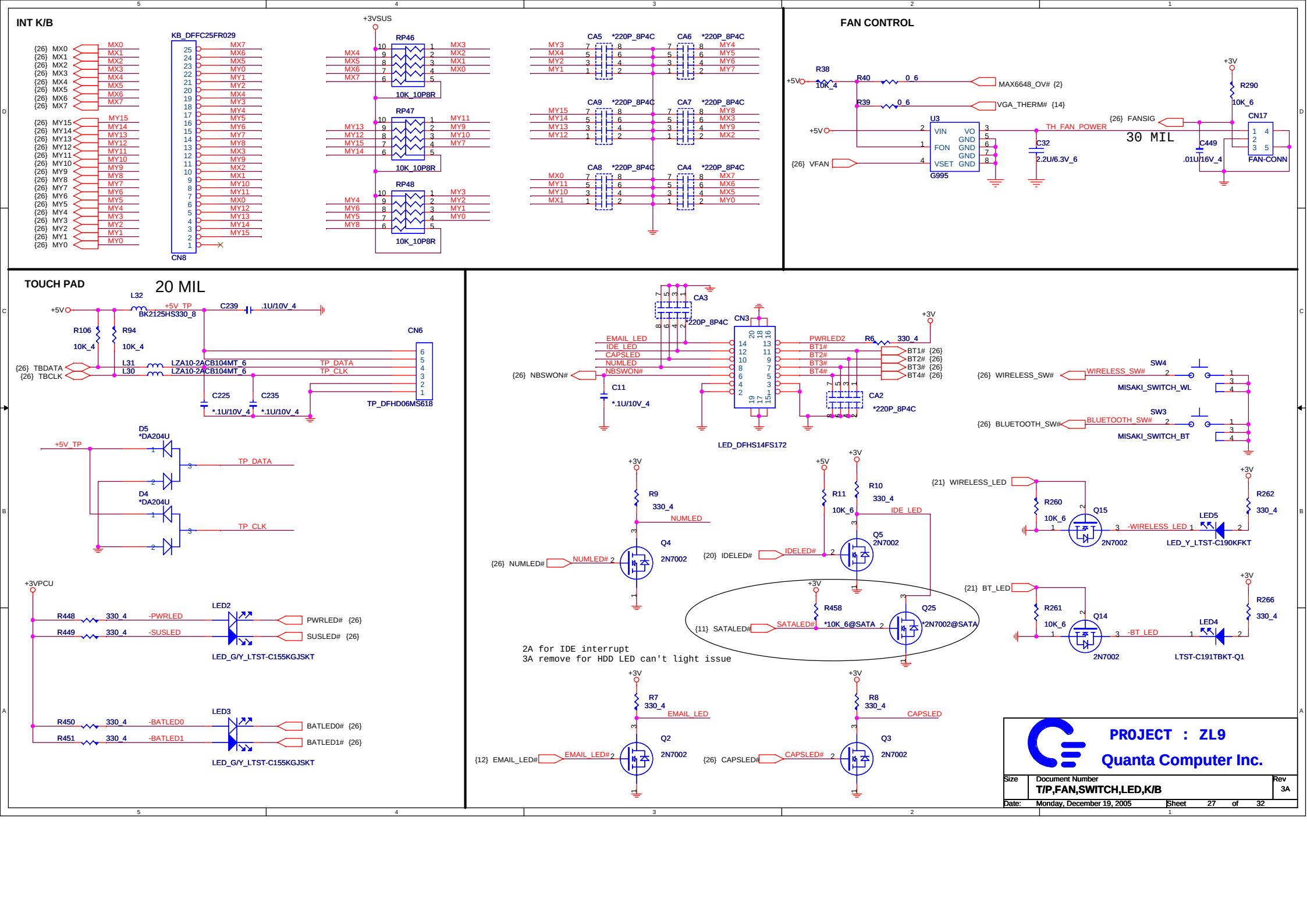
INT K/B
KB_DFFC25FR029
CN8
+3VSUS
RP46
RP47
RP48
10K_10P8R
CA5 *220P_8P4C
CA6 *220P_8P4C
CA9 *220P_8P4C
CA7 *220P_8P4C
CA8 *220P_8P4C
CA4 *220P_8P4C
FAN CONTROL
R38 10K_4
R40 0_6
R39 0_6
MAX6648_OV# {2}
VGA_THERM# {14}
U3
VIN VO
FON
VSET GND
G995
TH_FAN_POWER
C32 2.2U/6.3V_6
{26} FANSIG
30 MIL
R290 10K_6
CN17
C449 .01U/16V_4
FAN-CONN
{26} VFAN
TOUCH PAD
20 MIL
L32 BK2125HS330_8
+5V_TP
C239 .1U/10V_4
R106 10K_4
R94 10K_4
CN6
{26} TBDATA
{26} TBCLK
L31 LZA10-2ACB104MT_6
L30 LZA10-2ACB104MT_6
TP_DATA
TP_CLK
C225 *.1U/10V_4
C235 *.1U/10V_4
TP_DFHD06MS618
D5 *DA204U
D4 *DA204U
+3VPCU
R448 330_4 -PWRLED
R449 330_4 -SUSLED
LED2
PWRLED# {26}
SUSLED# {26}
LED_G/Y_LTST-C155KGJSKT
R450 330_4 -BATLED0
R451 330_4 -BATLED1
LED3
BATLED0# {26}
BATLED1# {26}
LED_G/Y_LTST-C155KGJSKT
CA3 *220P_8P4C
CN3
EMAIL_LED
IDE_LED
CAPSLED
NUMLED
NBSWON#
{26} NBSWON#
C11 *.1U/10V_4
PWRLED2
R6 330_4
BT1# {26}
BT2# {26}
BT3# {26}
BT4# {26}
CA2 *220P_8P4C
LED_DFHS14FS172
{26} WIRELESS_SW#
WIRELESS_SW#
SW4
MISAKI_SWITCH_WL
{26} BLUETOOTH_SW#
BLUETOOTH_SW#
SW3
MISAKI_SWITCH_BT
R9 330_4
NUMLED
Q4 2N7002
{26} NUMLED#
R11 10K_6
R10 330_4
IDE_LED
Q5 2N7002
{20} IDELED#
{21} WIRELESS_LED
R260 10K_6
Q15 2N7002
-WIRELESS_LED
LED5
LED_Y_LTST-C190KFKT
R262 330_4
R458 *10K_6@SATA
Q25 *2N7002@SATA
{11} SATALED#
{21} BT_LED
R261 10K_6
Q14 2N7002
-BT_LED
LED4
LTST-C191TBKT-Q1
R266 330_4
2A for IDE interrupt
3A remove for HDD LED can't light issue
R7 330_4
EMAIL_LED
Q2 2N7002
{12} EMAIL_LED#
R8 330_4
CAPSLED
Q3 2N7002
{26} CAPSLED#
PROJECT : ZL9
Quanta Computer Inc.
Size
Document Number
T/P,FAN,SWITCH,LED,K/B
Rev
3A
Date: Monday, December 19, 2005
Sheet 27 of 32

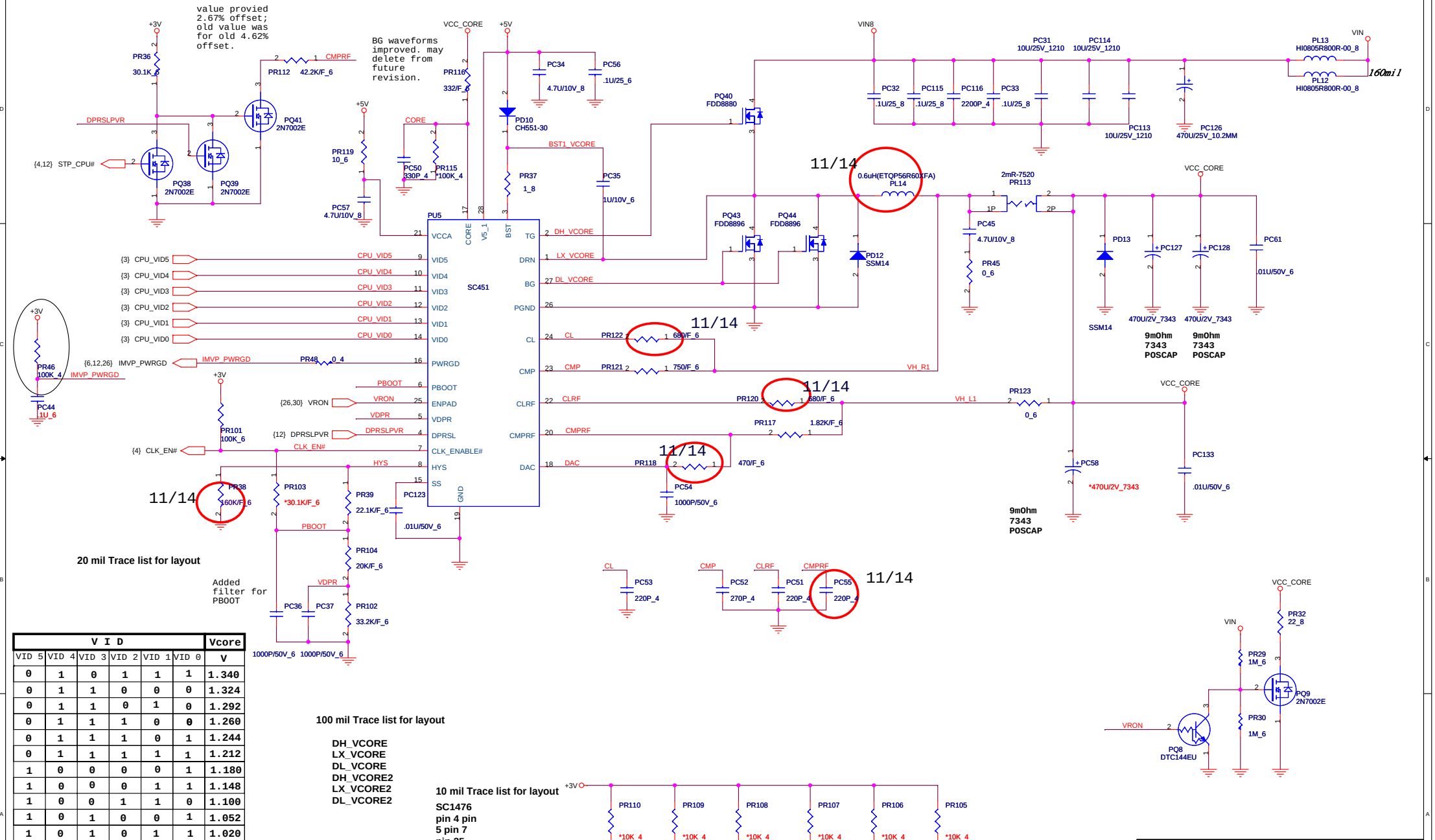

V I D						Vcore
VID 5	VID 4	VID 3	VID 2	VID 1	VID 0	V
0	1	0	1	1	1	1.340
0	1	1	0	0	0	1.324
0	1	1	0	1	0	1.292
0	1	1	1	0	0	1.260
0	1	1	1	0	1	1.244
0	1	1	1	1	1	1.212
1	0	0	0	0	1	1.180
1	0	0	0	1	1	1.148
1	0	0	1	1	0	1.100
1	0	1	0	0	1	1.052
1	0	1	0	1	1	1.020
1	0	1	1	1	0	0.972
1	1	0	0	0	0	0.940

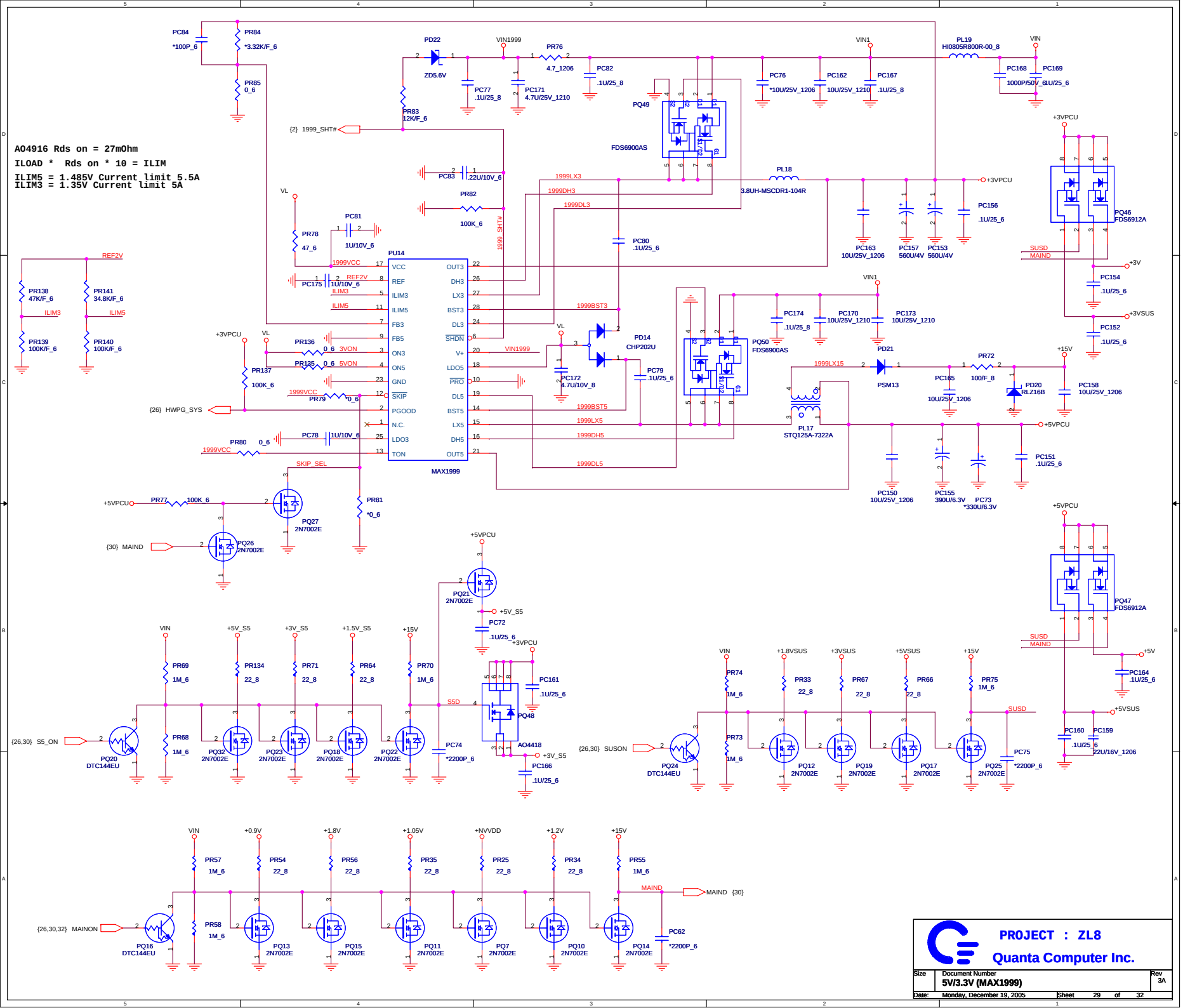
AO4916 Rds on = 27mOhm
ILOAD * Rds on * 10 = ILIM
ILIM5 = 1.485V Current limit 5.5A
ILIM3 = 1.35V Current limit 5A
MAX1999
PU14
FDS6900AS
PQ49
PQ50
PQ46
FDS6912A
PQ47
FDS6912A
PL17
STQ125A-7322A
PL18
3.8UH-MSCDR1-104R
PL19
HI0805R800R-00_8
PD14
CHP202U
PD20
RLZ16B
PD21
PSM13
PD22
ZD5.6V
PQ20
DTC144EU
PQ24
DTC144EU
PQ16
DTC144EU
PQ26
2N7002E
PQ27
2N7002E
PQ21
2N7002E
PQ48
AO4418
PQ32
2N7002E
PQ23
2N7002E
PQ18
2N7002E
PQ22
2N7002E
PQ12
2N7002E
PQ19
2N7002E
PQ17
2N7002E
PQ25
2N7002E
PQ13
2N7002E
PQ15
2N7002E
PQ11
2N7002E
PQ7
2N7002E
PQ10
2N7002E
PQ14
2N7002E
{2} 1999_SHT#
{26} HWPG_SYS
{30} MAIND
{26,30} S5_ON
{26,30} SUSON
{26,30,32} MAINON
MAIND {30}
+3VPCU
+5VPCU
+3V
+3VSUS
+15V
+5V
+5VSUS
+5V_S5
+3V_S5
VIN
VIN1
VIN1999
VL
REF2V
1999VCC
1999LX3
1999DH3
1999DL3
1999BST3
1999LX15
1999BST5
1999LX5
1999DH5
1999DL5
SKIP_SEL
SUSD
MAIND
S5D
+0.9V
+1.8V
+1.05V
+NVVDD
+1.2V
+1.8VSUS
+3VSUS
+5VSUS
PROJECT : ZL8
Quanta Computer Inc.
Size
Document Number
5V/3.3V (MAX1999)
Rev
3A
Date: Monday, December 19, 2005
Sheet 29 of 32

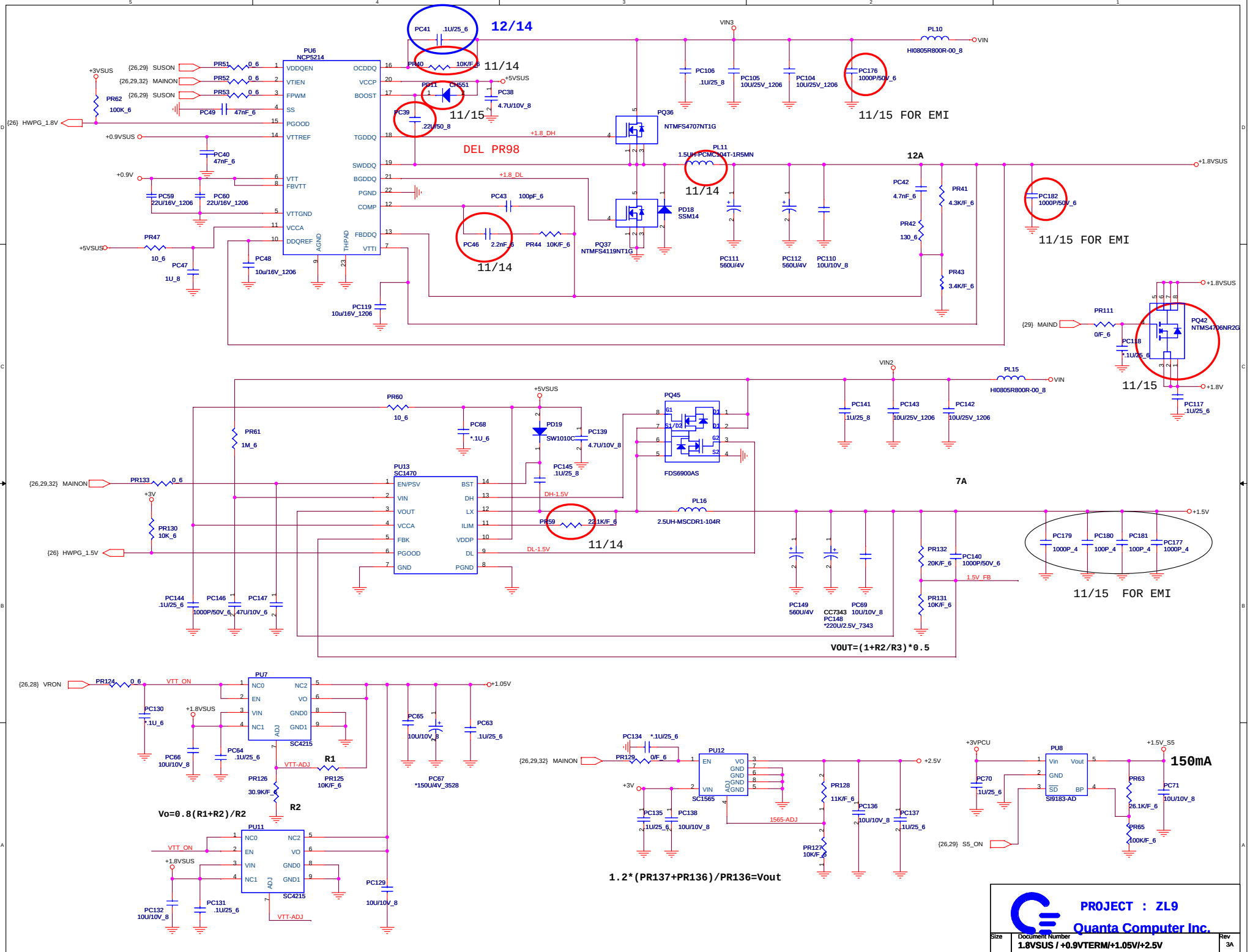
12/14
11/14
11/15
DEL PR98
11/15 FOR EMI
PU6
NCP5214
VDDQEN
VTIEN
FPWM
SS
PGOOD
VTTREF
VTT
FBVTT
VTTGND
VCCA
DDQREF
AGND
THPAD
OCDDQ
VCCP
BOOST
TGDDQ
SWDDQ
BGDDQ
PGND
COMP
FBDDQ
VTTI
PC41 .1U/25_6
PR40 10K/F_6
PD11 CH551
PC38 4.7U/10V_8
PC39 .22U/50_8
PR51 0_6
PR52 0_6
PR53 0_6
PC49 47nF_6
PR62 100K_6
PC40 47nF_6
PC59 22U/16V_1206
PC60 22U/16V_1206
PR47 10_6
PC47 1U_8
PC48 10u/16V_1206
PC119 10u/16V_1206
PC43 100pF_6
PC46 2.2nF_6
PR44 10K/F_6
PQ36 NTMFS4707NT1G
PQ37 NTMFS4119NT1G
PD18 SSM14
PL11 1.5UH-PCMC104T-1R5MN
PC106 .1U/25_8
PC105 10U/25V_1206
PC104 10U/25V_1206
PC176 1000P/50V_6
PL10 HI0805R800R-00_8
VIN3
VIN
+1.8_DH
+1.8_DL
+5VSUS
+3VSUS
+0.9VSUS
+0.9V
+1.8VSUS
12A
PC42 4.7nF_6
PR41 4.3K/F_6
PR42 130_6
PR43 3.4K/F_6
PC111 560U/4V
PC112 560U/4V
PC110 10U/10V_8
PC182 1000P/50V_6
PR111 0/F_6
PC118 *.1U/25_6
PQ42 NTMS4706NR2G
PC117 .1U/25_6
+1.8V
PU13
SC1470
EN/PSV
VIN
VOUT
VCCA
FBK
PGOOD
GND
BST
DH
LX
ILIM
VDDP
DL
PGND
PR60 10_6
PC68 *.1U_6
PR61 1M_6
PD19 SW1010C
PC139 4.7U/10V_8
PC145 .1U/25_8
PQ45 FDS6900AS
PR133 0_6
PR130 10K_6
PR59 22.1K/F_6
PL16 2.5UH-MSCDR1-104R
PL15 HI0805R800R-00_8
VIN2
PC141 .1U/25_8
PC143 10U/25V_1206
PC142 10U/25V_1206
7A
PC144 .1U/25_6
PC146 1000P/50V_6
PC147 47U/10V_6
PC149 560U/4V
CC7343 PC148 *220U/2.5V_7343
PC69 10U/10V_8
PR132 20K/F_6
PC140 1000P/50V_6
PR131 10K/F_6
1.5V_FB
PC179 1000P_4
PC180 100P_4
PC181 100P_4
PC177 1000P_4
+1.5V
VOUT=(1+R2/R3)*0.5
PU7
SC4215
NC0
EN
VIN
NC1
NC2
VO
GND0
GND1
ADJ
PR124 0_6
VTT_ON
PC130 *.1U_6
PC66 10U/10V_8
PC64 .1U/25_6
PR126 30.9K/F_6
R1
R2
PR125 10K/F_6
VTT-ADJ
PC65 10U/10V_8
PC63 .1U/25_6
PC67 *150U/4V_3528
+1.05V
Vo=0.8(R1+R2)/R2
PU11
PC132 10U/10V_8
PC131 .1U/25_6
PC129 10U/10V_8
PC134 *.1U/25_6
PR129 0/F_6
PU12
SC1565
EN
VIN
VO
GND
ADJ
PC135 .1U/25_6
PC138 10U/10V_8
1565-ADJ
PR128 11K/F_6
PR127 10K/F_6
PC136 10U/10V_8
PC137 1U/25_6
+2.5V
1.2*(PR137+PR136)/PR136=Vout
+3VPCU
PU8
SI9183-AD
Vin
Vout
GND
SD
BP
PC70 1U/25_6
PR63 26.1K/F_6
PR65 100K/F_6
PC71 10U/10V_8
+1.5V_S5
150mA
S5_ON
PROJECT : ZL9
Quanta Computer Inc.
Size
Document Number
1.8VSUS / +0.9VTERM/+1.05V/+2.5V
Rev
3A
Date: Monday, December 19, 2005
Sheet 30 of 32

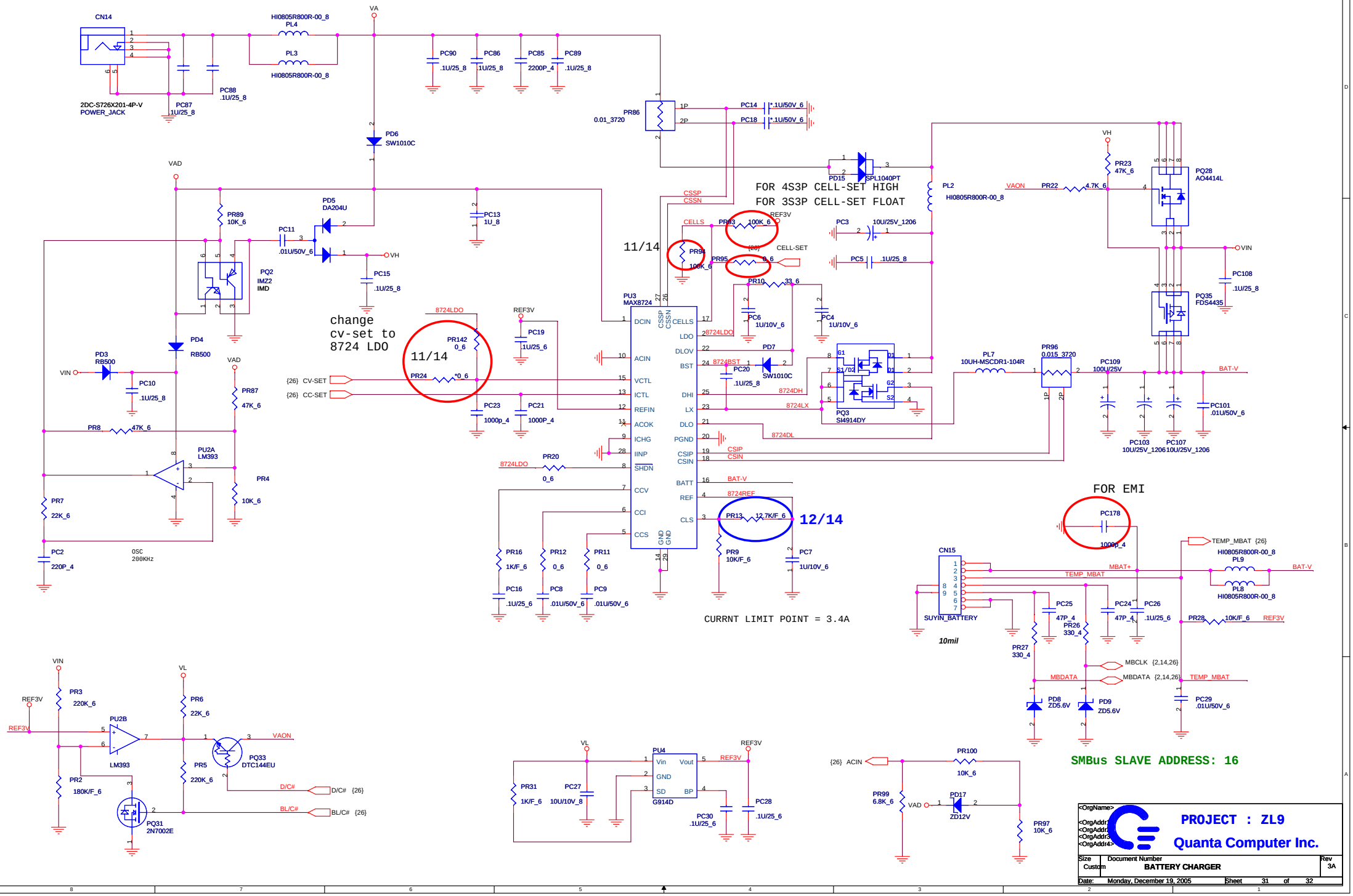
CN14
2DC-S726X201-4P-V
POWER_JACK
HI0805R800R-00_8
PL4
PL3
VA
PC90 .1U/25_8
PC86 1U/25_8
PC85 2200P_4
PC89 .1U/25_8
PC88 .1U/25_8
PC87 .1U/25_8
PR86 0.01_3720
PC14 *.1U/50V_6
PC18 *.1U/50V_6
PD6 SW1010C
PD15 SPL1040PT
FOR 4S3P CELL-SET HIGH
FOR 3S3P CELL-SET FLOAT
PL2 HI0805R800R-00_8
VAON
PR22 4.7K_6
VH
PR23 47K_6
PQ28 AO4414L
VIN
PC108 .1U/25_8
PQ35 FDS4435
VAD
PR89 10K_6
PD5 DA204U
PC11 .01U/50V_6
PC15 .1U/25_8
PC13 1U_8
PQ2 IMZ2 IMD
PD4 RB500
PD3 RB500
PC10 .1U/25_8
PR87 47K_6
PR8 47K_6
PU2A LM393
PR4 10K_6
PR7 22K_6
PC2 220P_4
OSC 200KHz
change cv-set to 8724 LDO
11/14
PR142 0_6
PR24 *0_6
8724LDO
REF3V
PC19 .1U/25_6
{26} CV-SET
{26} CC-SET
PC23 1000p_4
PC21 1000P_4
PU3 MAX8724
DCIN
ACIN
VCTL
ICTL
REFIN
ACOK
ICHG
IINP
SHDN
CCV
CCI
CCS
CSSP
CSSN
CELLS
LDO
DLOV
BST
DHI
LX
DLO
PGND
CSIP
CSIN
BATT
REF
CLS
GND
PR20 0_6
PR16 1K/F_6
PR12 0_6
PR11 0_6
PC16 .1U/25_6
PC8 .01U/50V_6
PC9 .01U/50V_6
PR93 100K_6
PR94 100K_6
PR95 0_6
CELL-SET
PC3 10U/25V_1206
PC5 .1U/25_8
PR10 33_6
PC6 1U/10V_6
PC4 1U/10V_6
PD7 SW1010C
PC20 .1U/25_8
8724BST
8724DH
8724LX
8724DL
PQ3 SI4914DY
PL7 10UH-MSCDR1-104R
PR96 0.015_3720
PC109 100U/25V
PC103 10U/25V_1206
PC107 10U/25V_1206
PC101 .01U/50V_6
BAT-V
PR13 12.7K/F_6
12/14
8724REF
PR9 10K/F_6
PC7 1U/10V_6
CURRNT LIMIT POINT = 3.4A
FOR EMI
PC178 1000p_4
CN15
SUYIN_BATTERY
10mil
TEMP_MBAT {26}
HI0805R800R-00_8
PL9
PL8
MBAT+
TEMP_MBAT
PC25 47P_4
PC24 47P_4
PC26 .1U/25_6
PR28 10K/F_6
PR26 330_4
PR27 330_4
MBCLK {2,14,26}
MBDATA
MBDATA {2,14,26}
PD8 ZD5.6V
PD9 ZD5.6V
PC29 .01U/50V_6
SMBus SLAVE ADDRESS: 16
VIN
REF3V
PR3 220K_6
PU2B
LM393
PR2 180K/F_6
VL
PR6 22K_6
PR5 220K_6
PQ33 DTC144EU
PQ31 2N7002E
D/C#
BL/C#
PU4 G914D
Vin
Vout
GND
SD
BP
PR31 1K/F_6
PC27 10U/10V_8
PC30 .1U/25_6
PC28 .1U/25_6
{26} ACIN
PR100 10K_6
PR99 6.8K_6
PD17 ZD12V
PR97 10K_6
PROJECT : ZL9
Quanta Computer Inc.
Size Custom
Document Number BATTERY CHARGER
Rev 3A
Date: Monday, December 19, 2005
Sheet 31 of 32

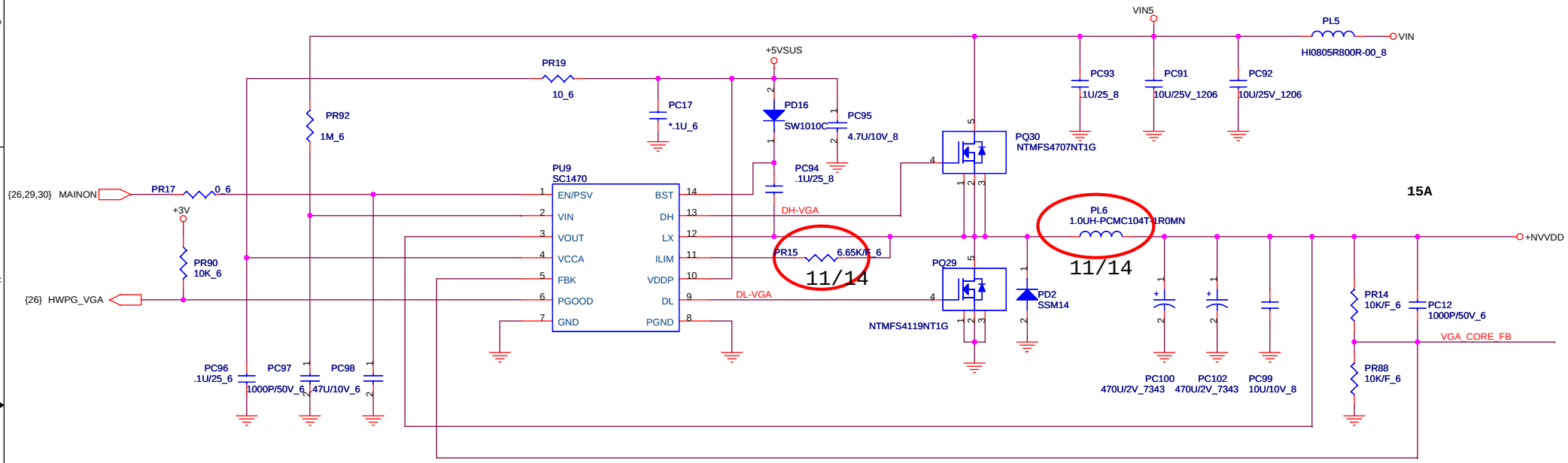

VOUT=(1+R2/R3)*0.5

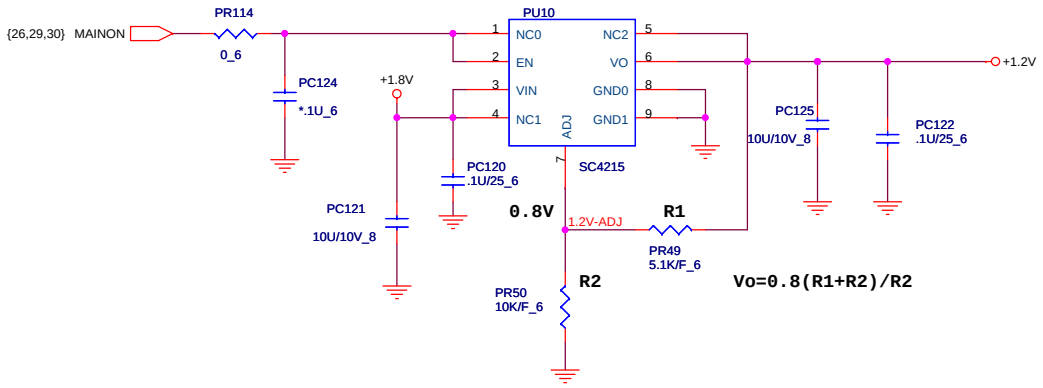

Vo=0.8(R1+R2)/R2

PROJECT : ZL9

Quanta Computer Inc.

Size	Document Number	Rev
	VGA CORE/+1.2V	3A

Date: Monday, December 19, 2005 Sheet 32 of 32