ZG8 Block Diagram

PCB STACK UP

- LAYER 1 : TOP
- LAYER 2 : GND1
- LAYER 3 : IN1
- LAYER 4 : IN2
- LAYER 5 : VCC
- LAYER 6 : IN3
- LAYER 7 : GND2
- LAYER 8 : BOT

1.8@ for 1.8HDD

2.5@ for 2.5HDD

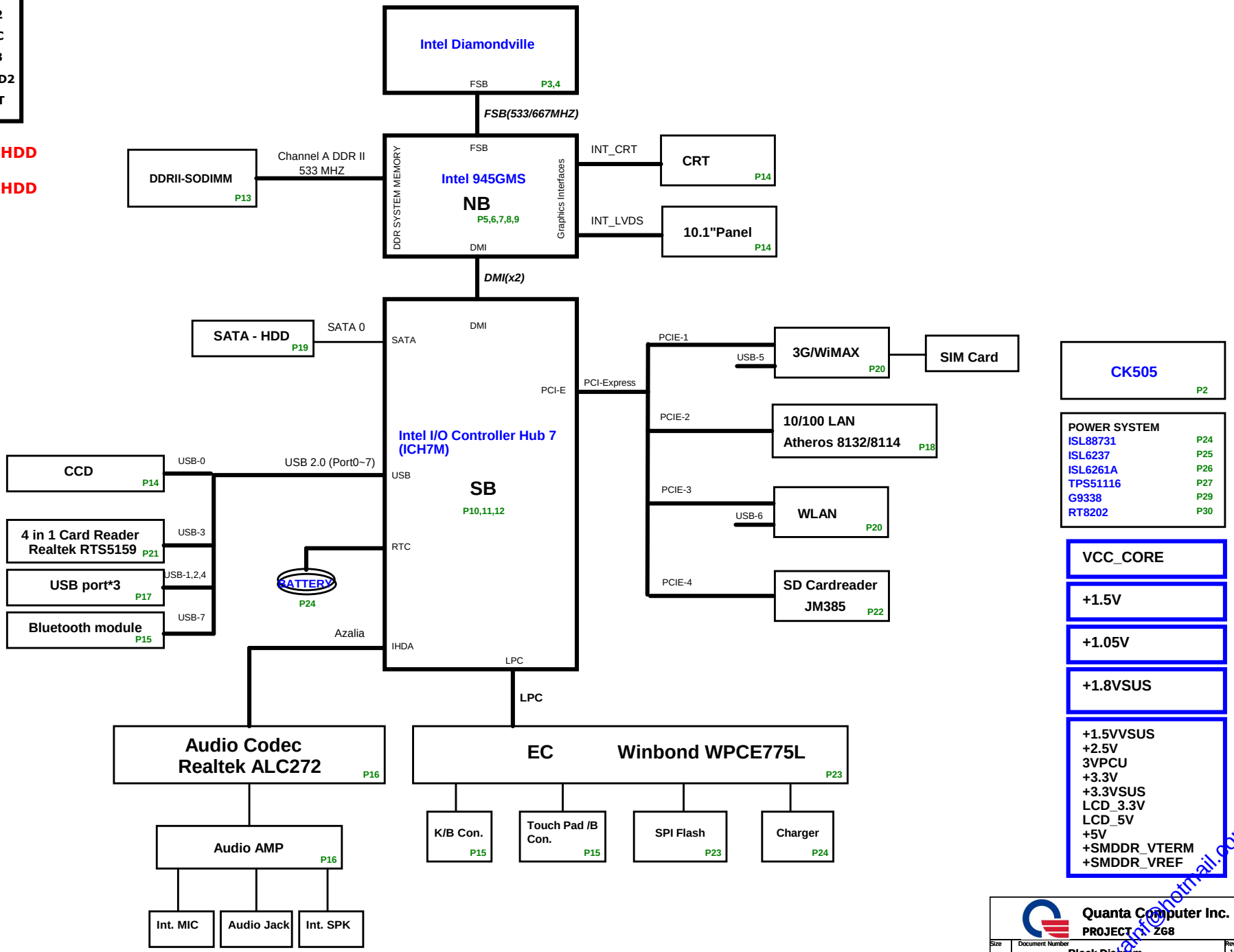

CK505
P2

POWER SYSTEM

ISL88731	P24
ISL6237	P25
ISL6261A	P26
TPS51116	P27
G9338	P29
RT8202	P30

VCC_CORE

+1.5V

+1.05V

+1.8VSUS

+1.5VVSUS
+2.5V
3VPCU
+3.3V
+3.3VSUS
LCD_3.3V
LCD_5V
+5V
+SMDDR_VTERM
+SMDDR_VREF

hesam@hotmail.com

Clock Generator(CLK)

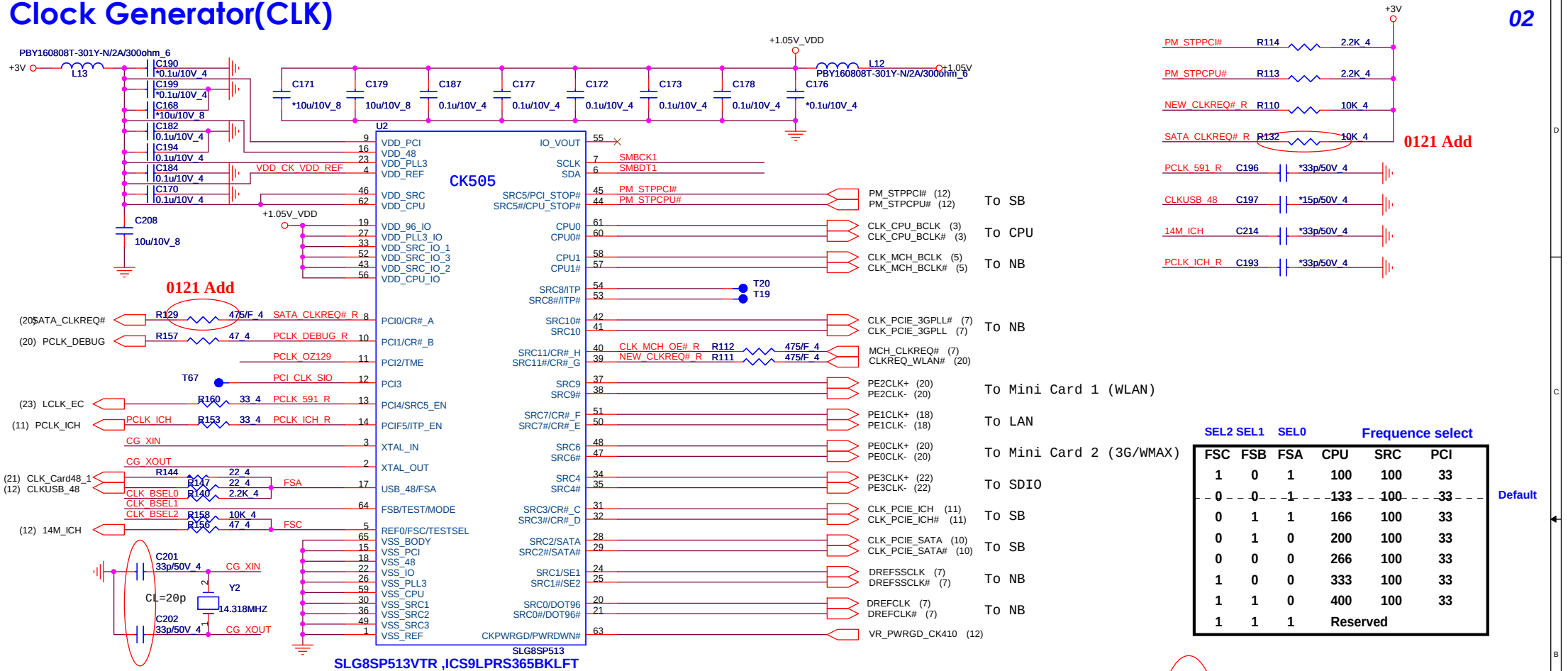

12/19 modify

	ICS9LPRS365 (ALPRS365K13)	RTM875T-606 (AL000875K06)	PULL HIGH	PULL DOWN
Pin 11	PCI2/TME	PCI2/TME internal PD	NO OVERCLOCKING (default)	NORMAL RUN
Pin 12	PCI-3	PCI-3/SRC5_EN internal PD	PIN37/38 IS SRC5	PIN37/38 IS PCI_STOP/CPU_STOP (default)
Pin 13	PCI-4/27M_SEL	PCI-4/27M_SEL internal PD	PIN 17/18 IS 27MHz	PIN 17/18 IS SRC/DOT (default)
Pin 14	PCIF-5/ITP_EN	PCIF-5/ITP_EN internal PD	PIN 46/47 IS CPUITP	PIN 46/47 IS SRC8 (default)

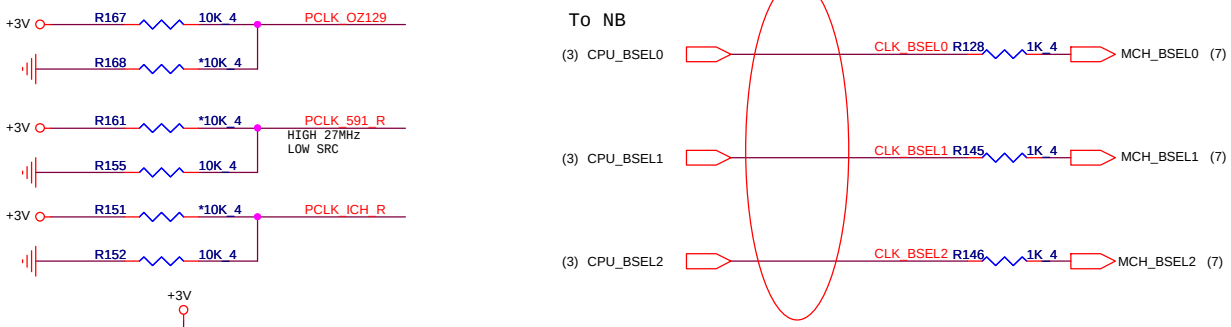

SEL2	SEL1	SEL0	CPU	SRC	PCI	
FSC	FSB	FSA				Frequence select
1	0	1	100	100	33	
0	0	1	133	100	33	Default
0	1	1	166	100	33	
0	1	0	200	100	33	
0	0	0	266	100	33	
1	0	0	333	100	33	
1	1	0	400	100	33	
1	1	1	Reserved			

Clock Gen I2C

<MAIN>:ICS9LPRS365BGLFT QCI:ALPRS365K13
<SECOND>:SLG8SP512TTR: QCI:AL8SP512K05

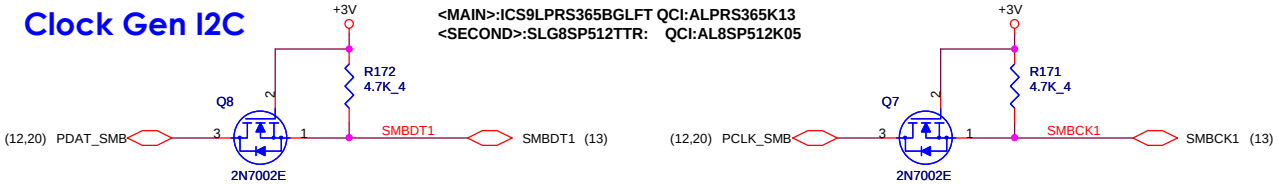

Quanta Computer Inc.

PROJECT : ZG8

Size	Document Number	Rev
	CLOCK GENERATOR	1A

Date: Tuesday, February 03, 2009 Sheet 2 of 33

CPU-1(CPU)

03

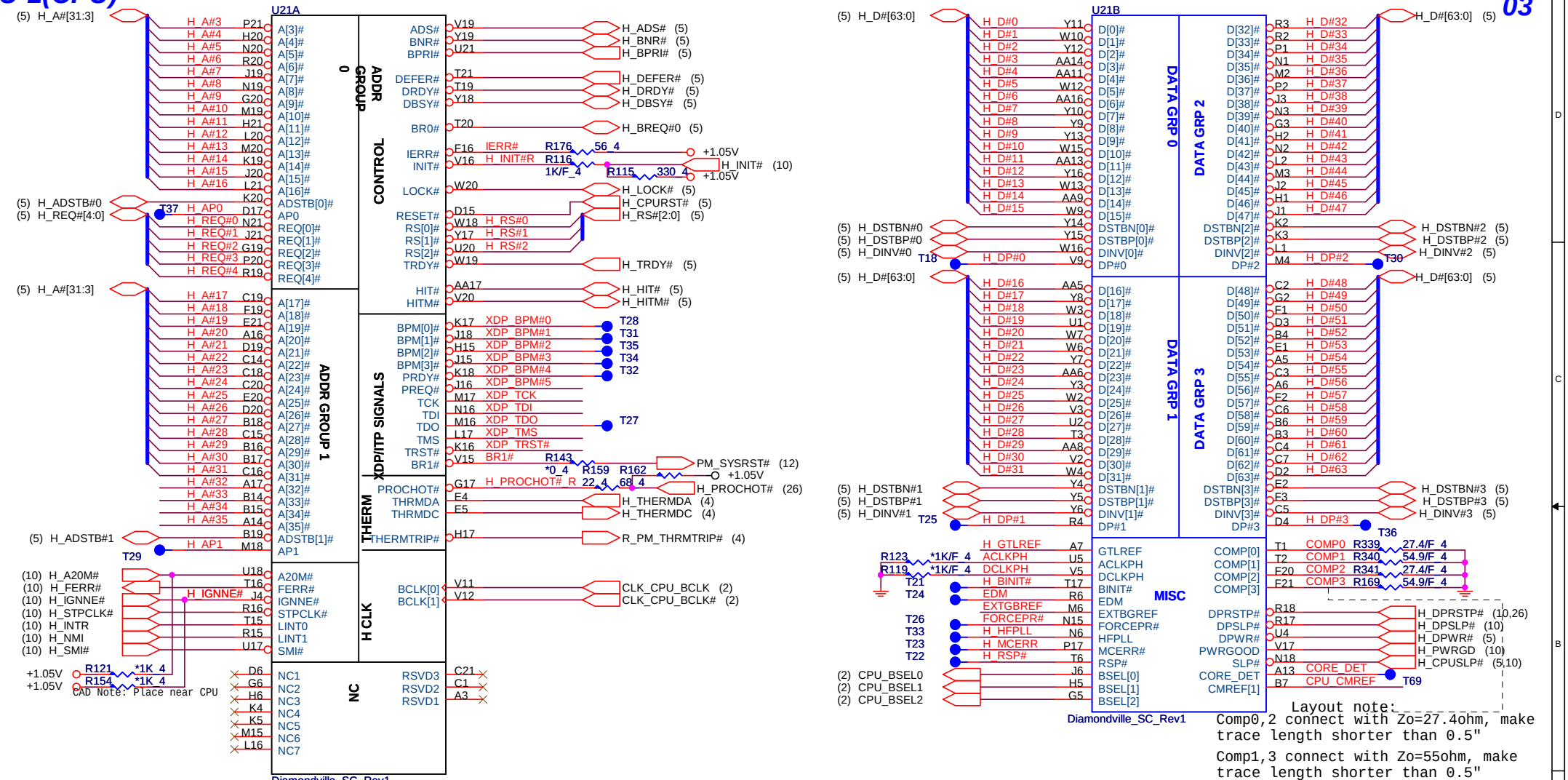

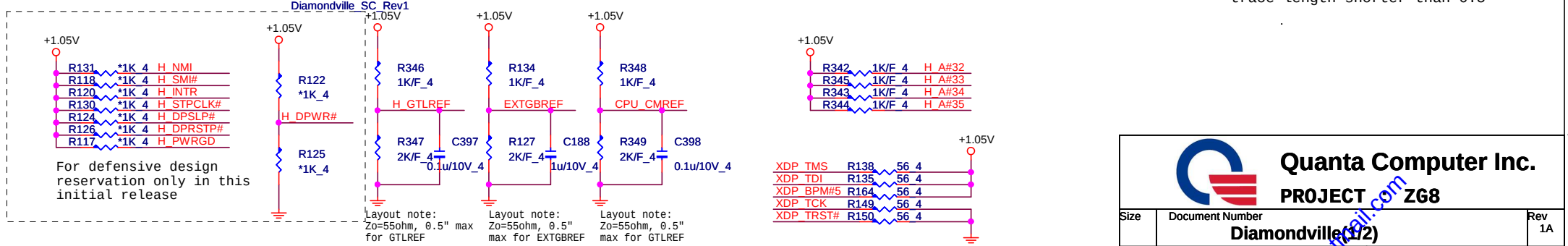

Quanta Computer Inc.

PROJECT : ZG8

Size	Document Number	Rev
	Diamondville(1/2)	1A

Date: Monday, January 19, 2009 Sheet 3 of 33

hexainf@hotmail.com

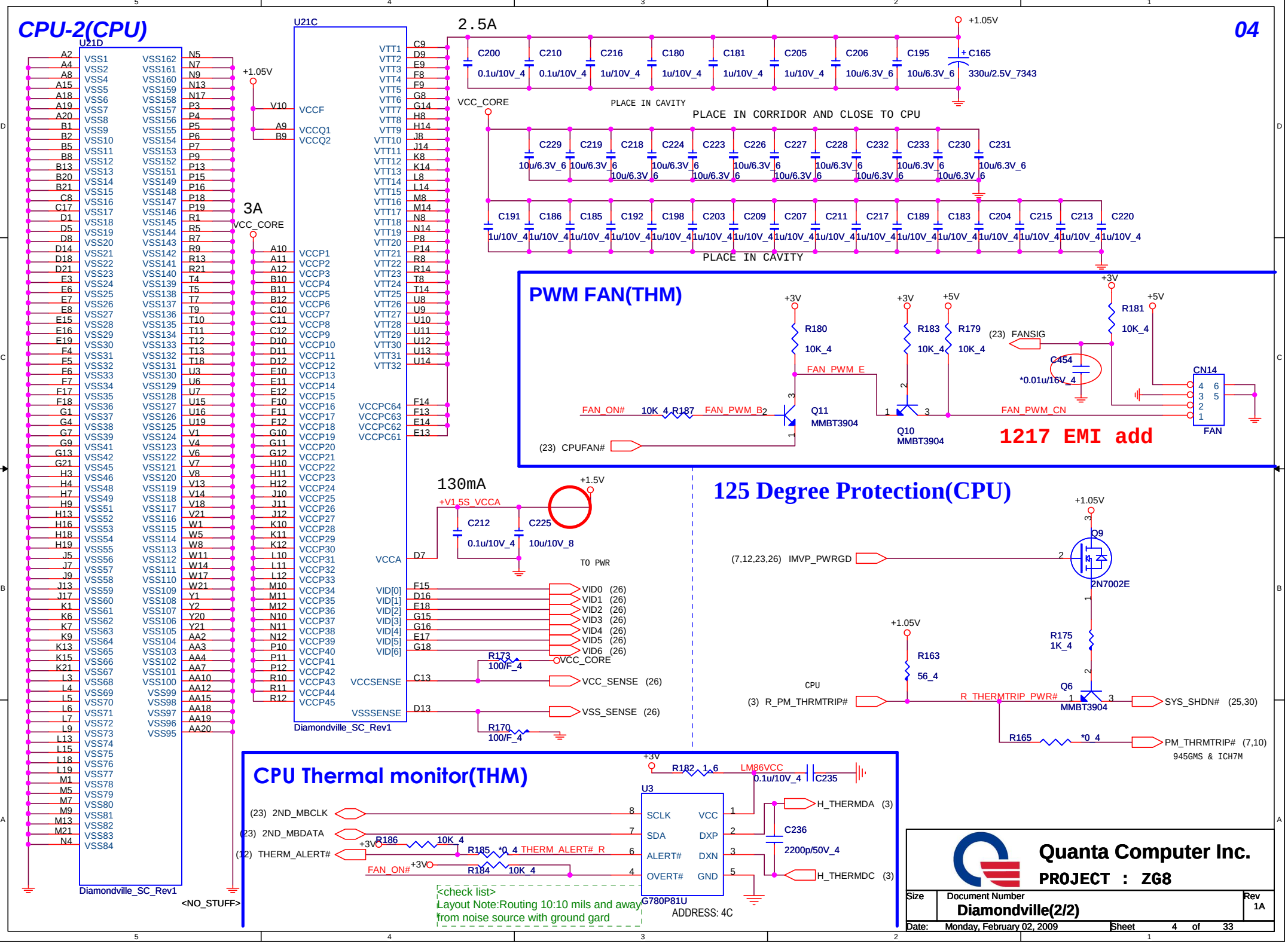
CPU-2(CPU)
04
U21D
U21C
Diamondville_SC_Rev1
2.5A
3A
130mA
+1.05V
+1.5V
VCC_CORE
C200 0.1u/10V_4
C210 0.1u/10V_4
C216 1u/10V_4
C180 1u/10V_4
C181 1u/10V_4
C205 1u/10V_4
C206 10u/6.3V_6
C195 10u/6.3V_6
C165 330u/2.5V_7343
PLACE IN CAVITY
PLACE IN CORRIDOR AND CLOSE TO CPU
C229 C219 C218 C224 C223 C226 C227 C228 C232 C233 C230 C231
10u/6.3V_6
C191 C186 C185 C192 C198 C203 C209 C207 C211 C217 C189 C183 C204 C215 C213 C220
1u/10V_4
PWM FAN(THM)
R180 10K_4
R183 10K_4
R179 10K_4
R181 10K_4
(23) FANSIG
C454 *0.01u/16V_4
FAN_PWM_E
FAN_ON#
10K_4 R187
FAN_PWM_B
Q11 MMBT3904
Q10 MMBT3904
FAN_PWM_CN
CN14
FAN
(23) CPUFAN#
1217 EMI add
+V1.5S_VCCA
C212 0.1u/10V_4
C225 10u/10V_8
TO PWR
VID0 (26)
VID1 (26)
VID2 (26)
VID3 (26)
VID4 (26)
VID5 (26)
VID6 (26)
R173 100/F_4
VCC_SENSE (26)
VSS_SENSE (26)
R170 100/F_4
125 Degree Protection(CPU)
(7,12,23,26) IMVP_PWRGD
Q9 2N7002E
R163 56_4
R175 1K_4
CPU
(3) R_PM_THRMTRIP#
R_THERMTRIP_PWR#
Q6 MMBT3904
SYS_SHDN# (25,30)
R165 *0_4
PM_THRMTRIP# (7,10)
945GMS & ICH7M
CPU Thermal monitor(THM)
R182 1_6
LM86VCC
C235 0.1u/10V_4
U3
(23) 2ND_MBCLK
(23) 2ND_MBDATA
(12) THERM_ALERT#
R186 10K_4
R185 *0_4 THERM_ALERT#_R
R184 10K_4
FAN_ON#
SCLK SDA ALERT# OVERT# VCC DXP DXN GND
H_THERMDA (3)
H_THERMDC (3)
C236 2200p/50V_4
G780P81U
ADDRESS: 4C
<check list>
Layout Note:Routing 10:10 mils and away from noise source with ground gard
<NO_STUFF>
Quanta Computer Inc.
PROJECT : ZG8
Size
Document Number
Diamondville(2/2)
Rev 1A
Date: Monday, February 02, 2009
Sheet 4 of 33

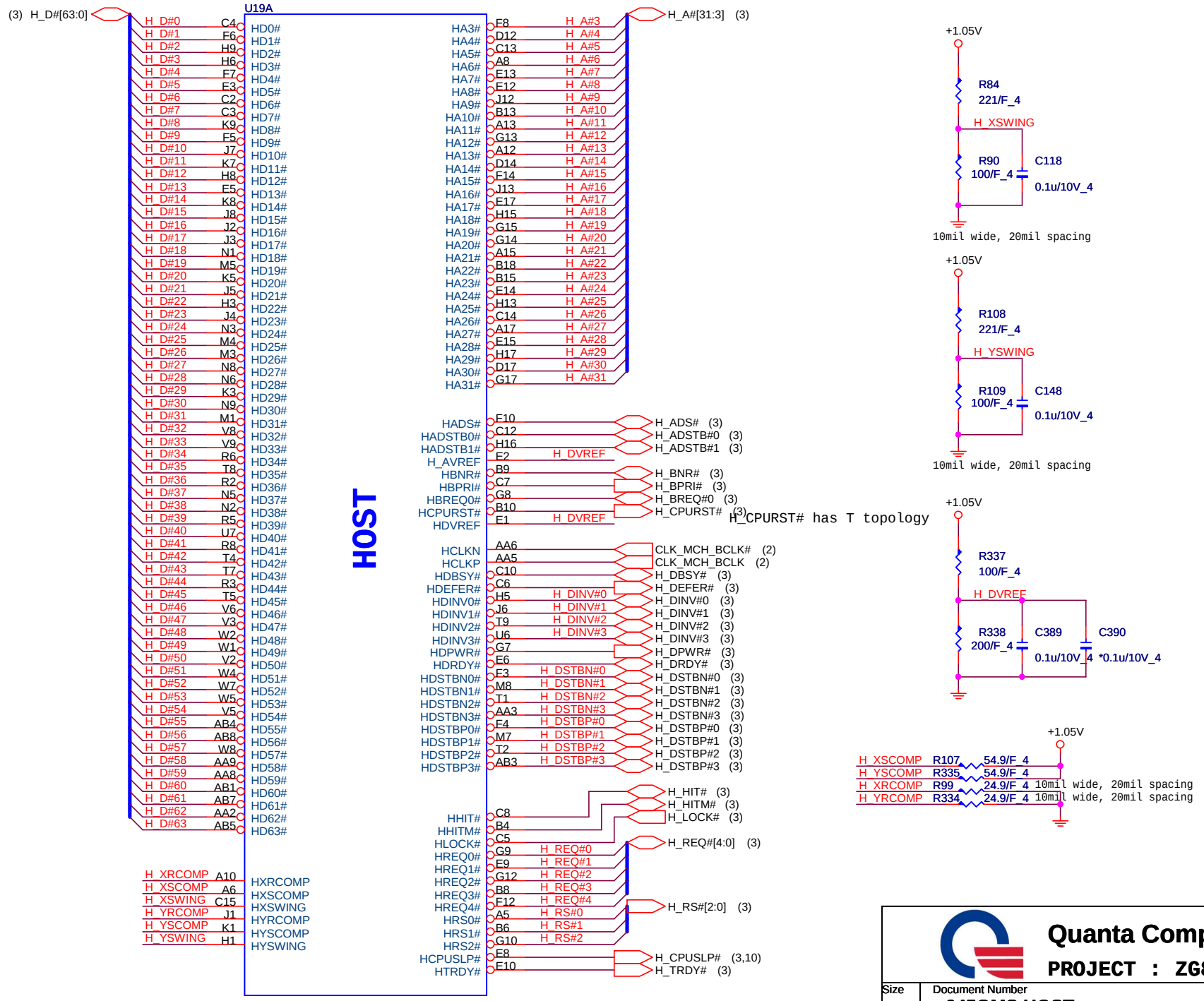

Quanta Computer Inc.

PROJECT : ZG8

Size	Document Number	Rev
	945GMS HOST	1A

Date: Monday, January 19, 2009 Sheet 5 of 33

hexainf@hotmail.com

945GMS DDR(CLG)

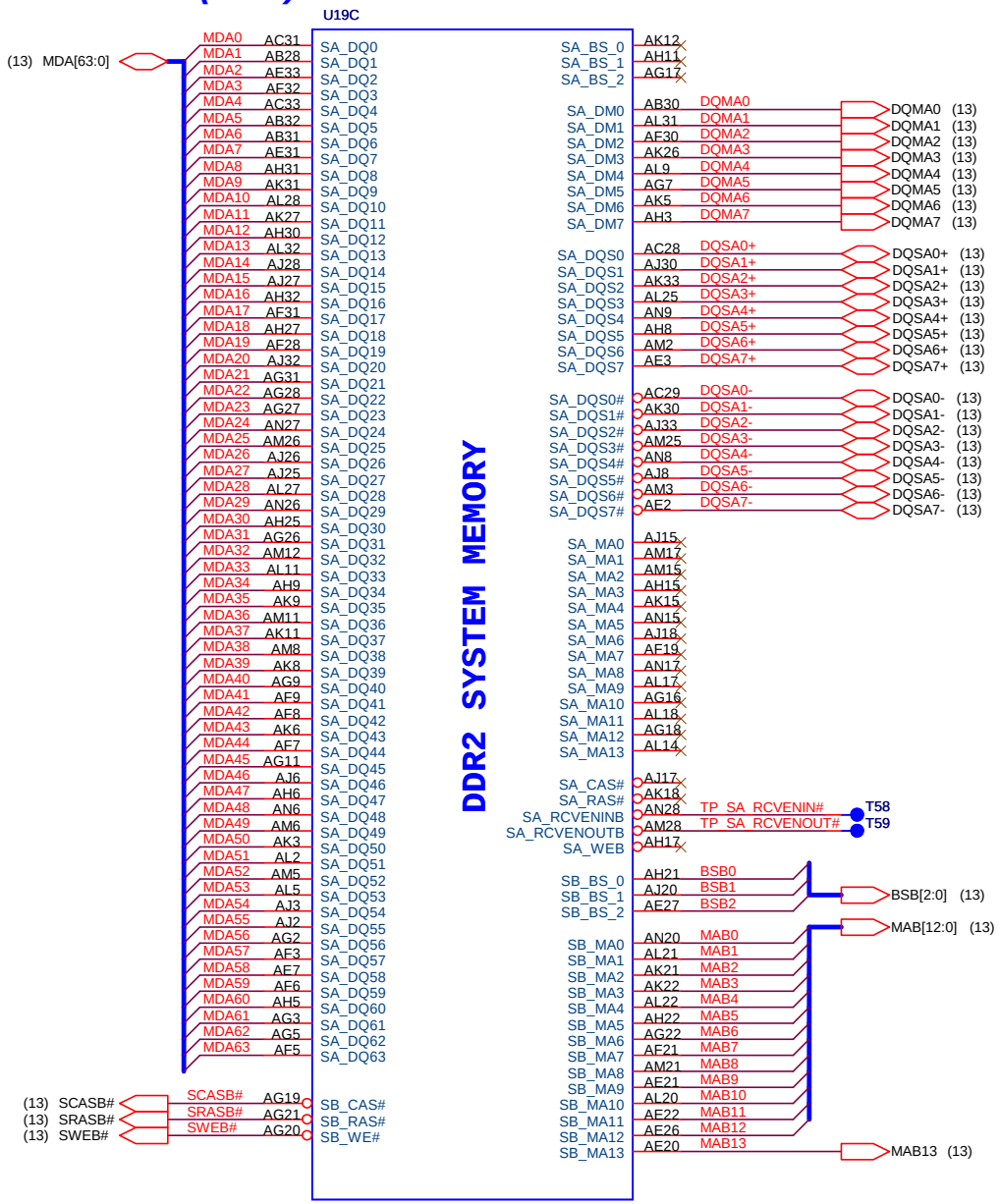

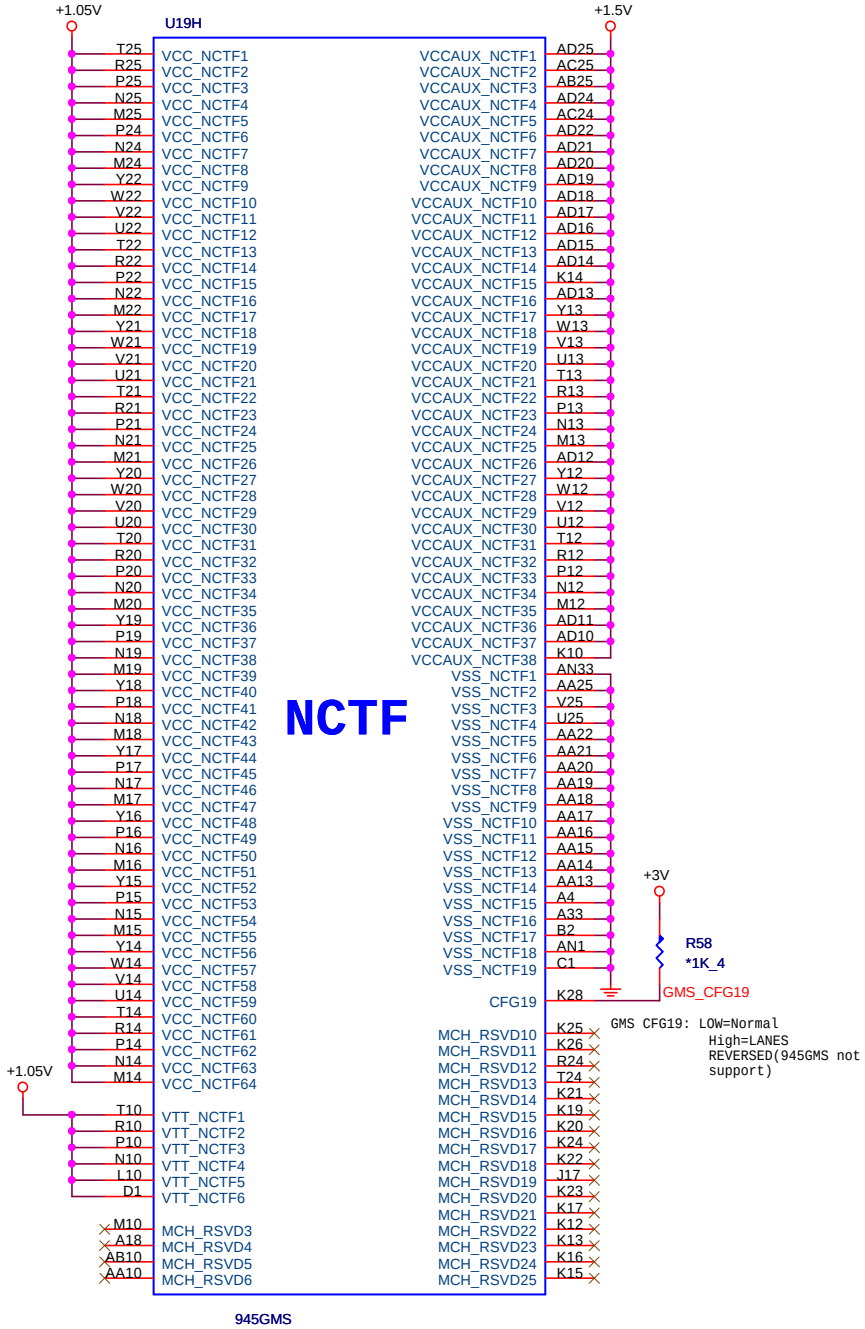

Quanta Computer Inc.

PROJECT : ZG8

Size	Document Number	Rev
	945GMS DDR	1A

Date: Monday, February 02, 2009 Sheet 6 of 33

DMI, LVDS, DDR CLK(CLG)

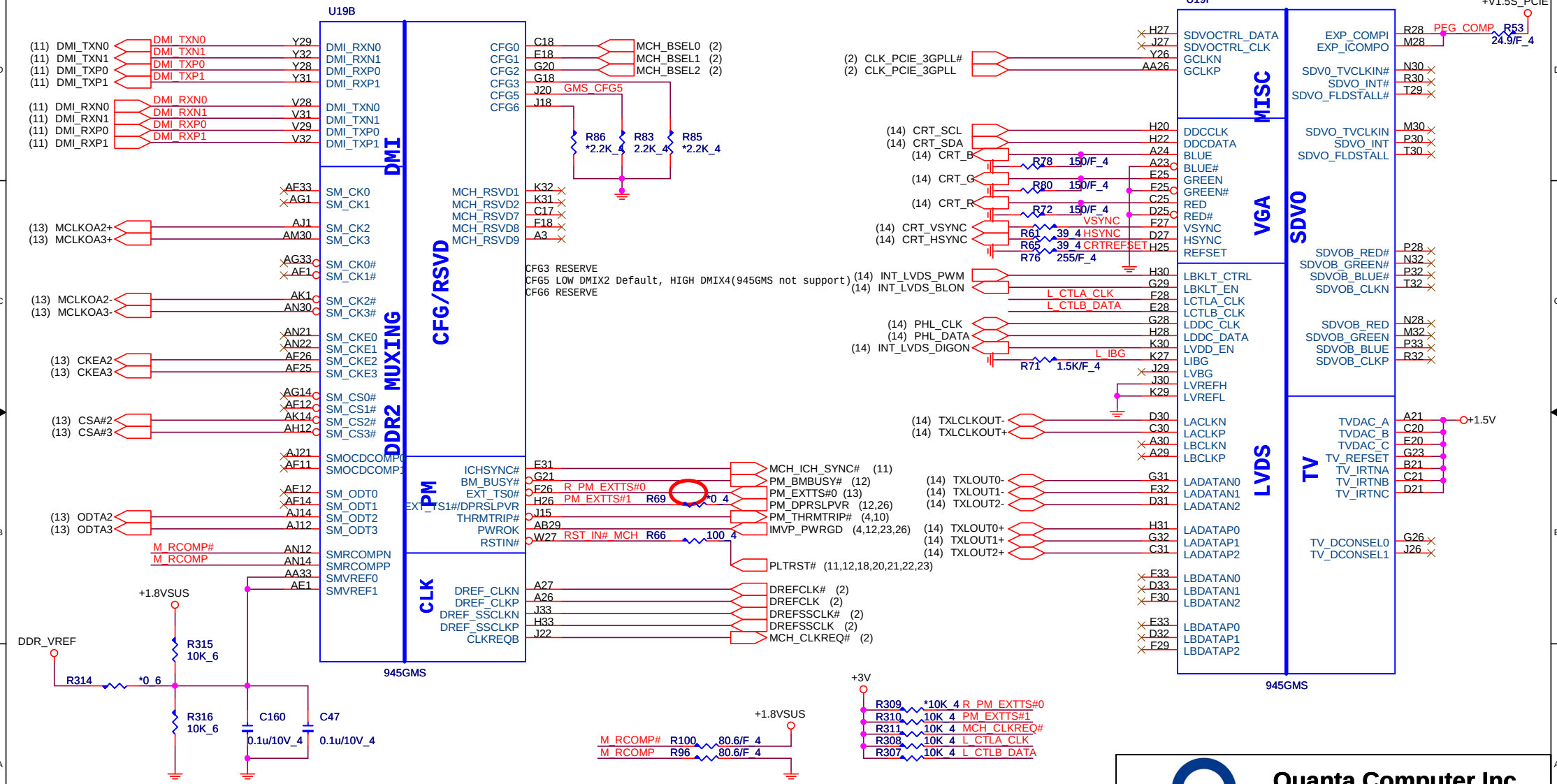

Quanta Computer Inc.

PROJECT : ZG8

Size	Document Number	Rev
	945GMS LVDS, DMI, DDR CLK	1A

Date: Monday, January 19, 2009 Sheet 7 of 33

hexainf@hotmail.com

945GMS POWER(CLG)

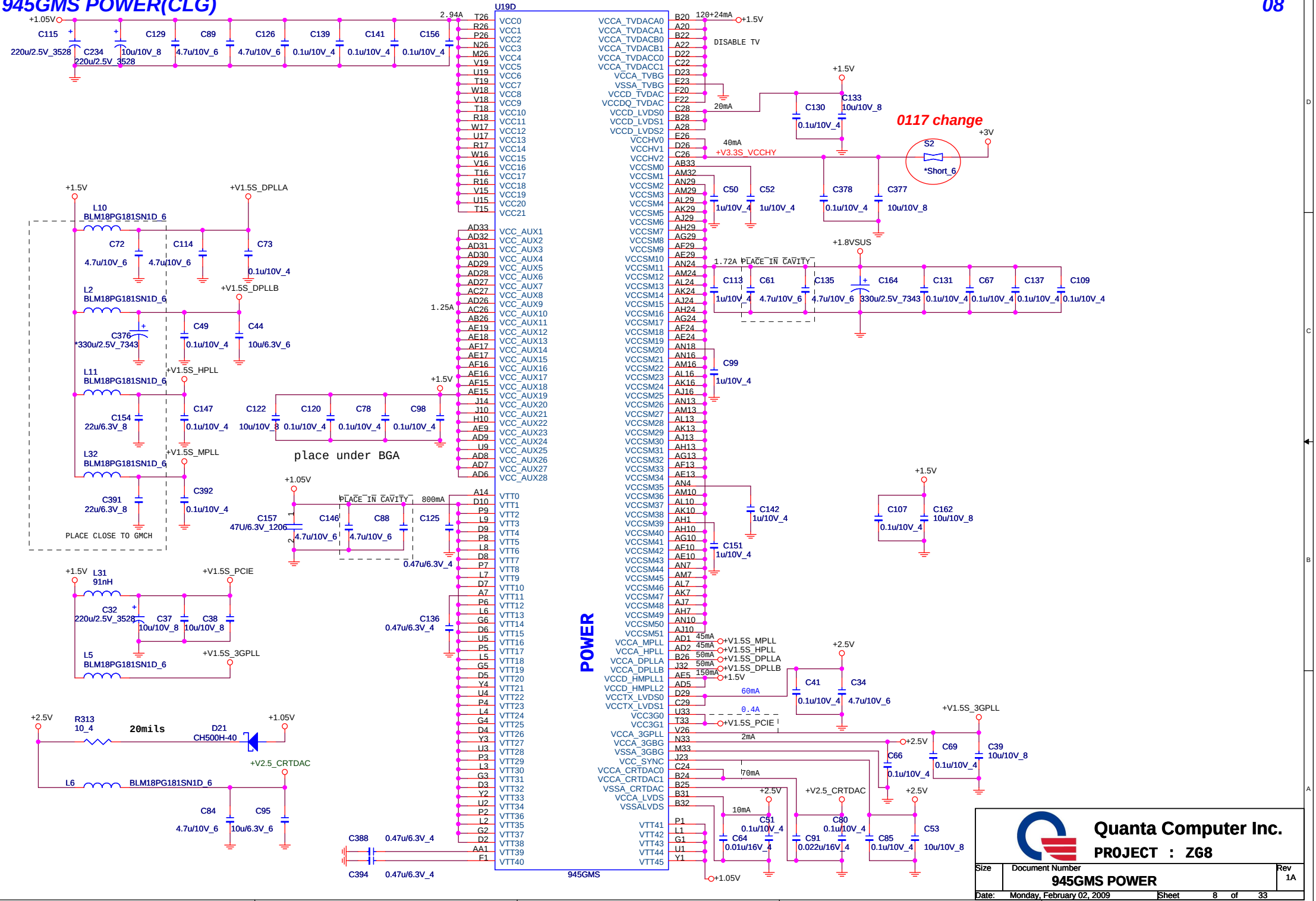

Quanta Computer Inc.

PROJECT : ZG8

Size	Document Number	Rev
	945GMS POWER	1A

Date: Monday, February 02, 2009 Sheet 8 of 33

945GMS GND(CLG)

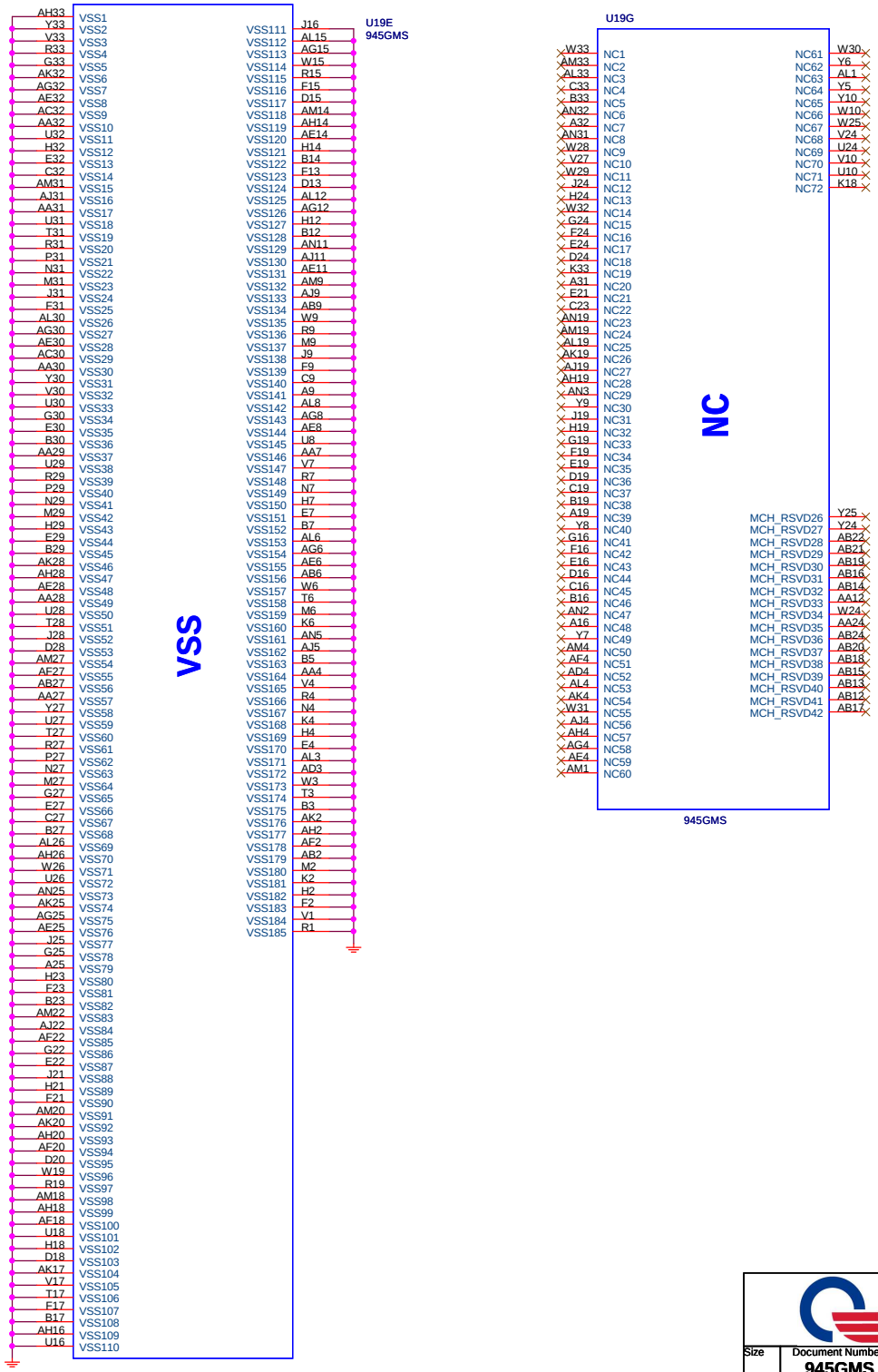

Quanta Computer Inc.	
PROJECT : ZG8	
Size	Document Number: 945GMS GND
Rev	1A
Date: Monday, January 19, 2009	Sheet 9 of 33

hexainf@hotmail.com

ICH7-M(CLG)

1/7 Change CAP to 15P for crystal precision

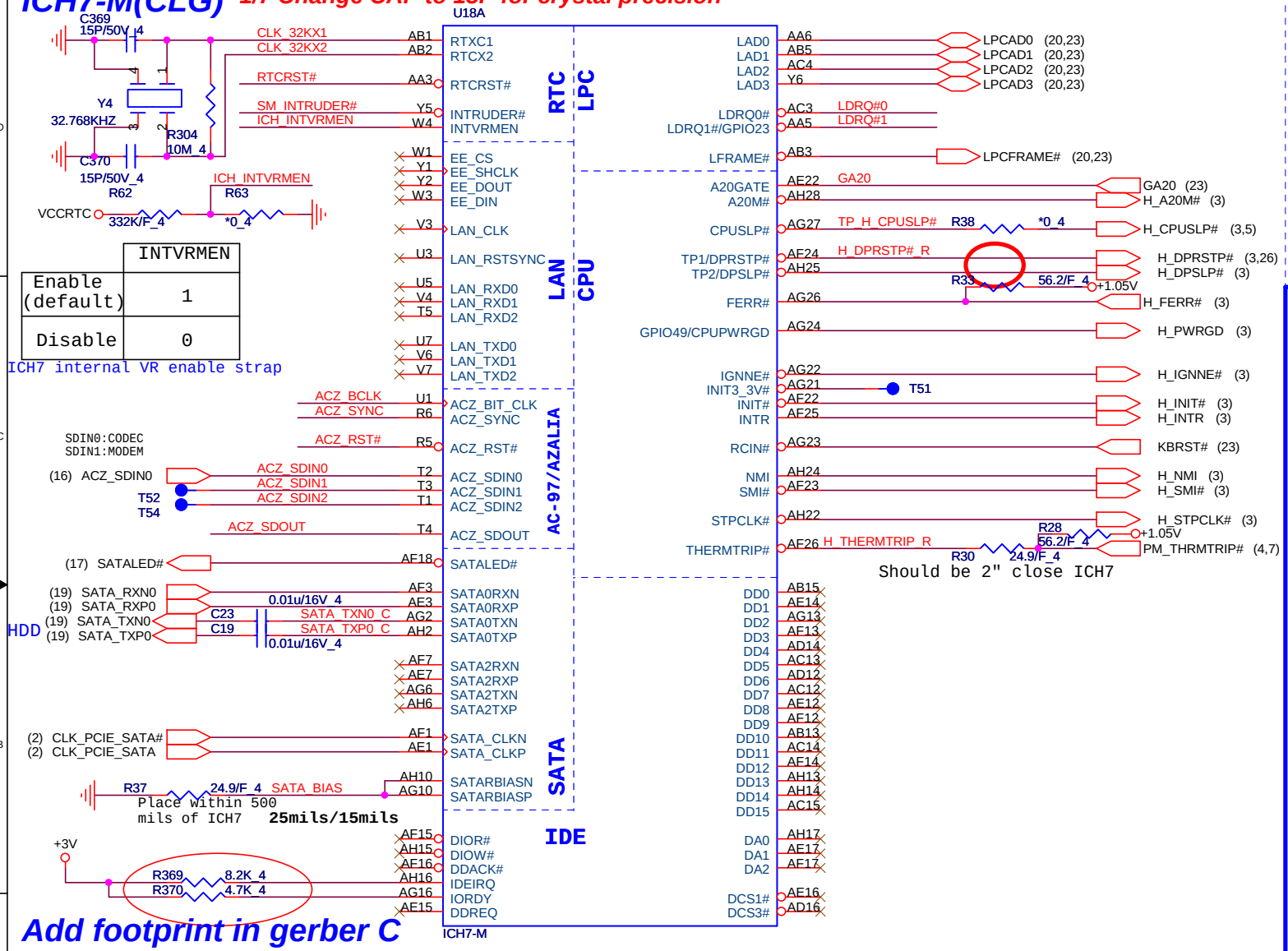

	INTVRMEN
Enable (default)	1
Disable	0

ICH7 internal VR enable strap

Add footprint in gerber C

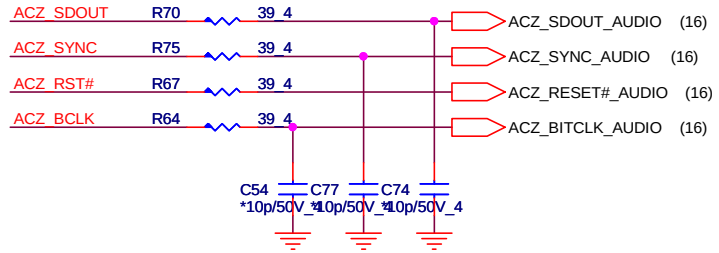

COMPONENTS	P/N
945GMS	AJSLB2R0T00
ICH7-M	AJSL8YB0T21

Pull-UP

10

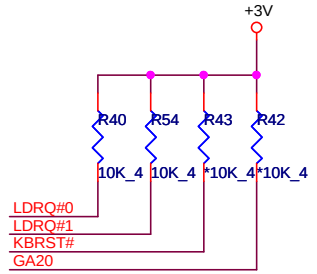

RTC(RTC)

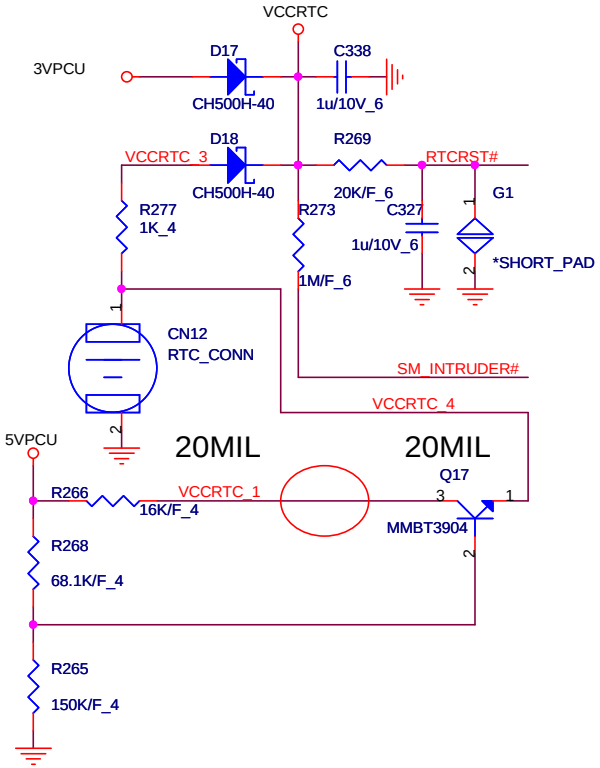

Quanta Computer Inc.

PROJECT : ZG8

Size	Document Number	Rev
	ICH7-M (CPU, SATA, IDE,LPC)	1A

Date: Tuesday, February 03, 2009 Sheet 10 of 33

ICH7-M(CLG)

Exchange LAN & Wimax

caps within 250mils

LAN

Wimax

Mini card

SDIO

U18D

PCI-Express

Direct Media Interface

SPI

USB

ICH7-M

(18) PE1RX- F26 PERn1
(18) PE1RX+ F25 PERp1
(18) PE1TX- E28 PETn1 — C124 0.1u/10V_4 — PCIE_TXN1_C
(18) PE1TX+ E27 PETp1 — C121 0.1u/10V_4 — PCIE_TXP1_C

(20) PE0RX- H26 PERn2
(20) PE0RX+ H25 PERp2
(20) PE0TX- G28 PETn2 — C128 0.1u/10V_4 — PCIE_TXN0_C
(20) PE0TX+ G27 PETp2 — C132 0.1u/10V_4 — PCIE_TXP0_C

(20) PE2RX- K26 PERn3
(20) PE2RX+ K25 PERp3
(20) PE2TX- J28 PETn3 — C101 0.1u/10V_4 — PCIE_TXN2_C
(20) PE2TX+ J27 PETp3 — C116 0.1u/10V_4 — PCIE_TXP2_C

(22) PE3RX- M26 PERn4
(22) PE3RX+ M25 PERp4
(22) PE3TX- L28 PETn4 — C97 0.1u/10V_4 — PCIE_TXN3_C
(22) PE3TX+ L27 PETp4 — C96 0.1u/10V_4 — PCIE_TXP3_C

P26 PERn5
P25 PERp5
N28 PETn5
N27 PETp5

T25 PERn6
T24 PERp6
R28 PETn6
R27 PETp6

DMI0RXN V26
DMI0RXP V25
DMI0TXN U28
DMI0TXP U27
DMI_RXN0 (7)
DMI_RXP0 (7)
DMI_TXN0 (7)
DMI_TXP0 (7)

DMI1RXN Y26
DMI1RXP Y25
DMI1TXN W28
DMI1TXP W27
DMI_RXN1 (7)
DMI_RXP1 (7)
DMI_TXN1 (7)
DMI_TXP1 (7)

DMI2RXN AB26
DMI2RXP AB25
DMI2TXN AA28
DMI2TXP AA27

DMI3RXN AD25
DMI3RXP AD24
DMI3TXN AC28
DMI3TXP AC27

DMI_CLKN AE28 — CLK_PCIE_ICH# (2)
DMI_CLKP AE27 — CLK_PCIE_ICH (2)

DMI_ZCOMP C25
DMI_IRCOMP D25 — DRI_IRCOMP_R — R95 24.9/F_4 — +1.5V
15/15mils Place within 500 mils of ICH7

+3V

R81 10K_4 R82 10K_4 R74 10K_4

T55 T8 T57 — SPI_SCLK R2 — SPI_CE# P6 — SPI_ARB P1
T10 T9 — SPI_SI P5 — SPI_SO P2

SPI_CLK
SPI_CS#
SPI_ARB
SPI_MOSI
SPI_MISO

OC0# D3
OC1# C4
OC2# D5
OC3# D4
OC4# E5
OC5# C3
OC6# A2
OC7# B3

(17) USBOC#1_2 — OC2# OC3#
(17) USBOC#4 — OC4# OC5# OC6# OC7#

OC5#/GPIO29
OC6#/GPIO30
OC7#/GPIO31

USBP0N
USBP0P
USBP1N
USBP1P
USBP2N
USBP2P
USBP3N
USBP3P
USBP4N
USBP4P
USBP5N
USBP5P
USBP6N
USBP6P
USBP7N
USBP7P

F1 USBP0- (14)
F2 USBP0+ (14)
G4 USBP1- (17)
G3 USBP1+ (17)
H1 USBP2- (17)
H2 USBP2+ (17)
J4 USBP3- (21)
J3 USBP3+ (21)
K1 USBP4- (17)
K2 USBP4+ (17)
L4 USBP5- (20)
L5 USBP5+ (20)
M1 USBP6- (20)
M2 USBP6+ (20)
N4 USBP7- (15)
N3 USBP7+ (15)

CCD
sub board
sub board
Card reader
System
3G CARD
WLAN
Blue tooth

USBRBIAS# D2
USBRBIAS D1 — USB_RBIAS_PN — R329 22.6/F_6
25mils/15mils
Place within 500 mils of ICH7

U18E
ICH7-M

A4 VSS[1] VSS[98] P28
A23 VSS[2] VSS[99] R1
B1 VSS[3] VSS[100] R11
B8 VSS[4] VSS[101] R12
B11 VSS[5] VSS[102] R13
B14 VSS[6] VSS[103] R14
B17 VSS[7] VSS[104] R15
B20 VSS[8] VSS[105] R16
B26 VSS[9] VSS[106] R17
B28 VSS[10] VSS[107] R18
C2 VSS[11] VSS[108] T6
C6 VSS[12] VSS[109] T12
C27 VSS[13] VSS[110] T13
D10 VSS[14] VSS[111] T14
D13 VSS[15] VSS[112] T15
D18 VSS[16] VSS[113] T16
D21 VSS[17] VSS[114] T17
D24 VSS[18] VSS[115] U4
E1 VSS[19] VSS[116] U12
E2 VSS[20] VSS[117] U13
E4 VSS[21] VSS[118] U14
E8 VSS[22] VSS[119] U15
E15 VSS[23] VSS[120] U16
F3 VSS[24] VSS[121] U17
F4 VSS[25] VSS[122] U24
F5 VSS[26] VSS[123] U25
F12 VSS[27] VSS[124] U26
F27 VSS[28] VSS[125] V2
F28 VSS[29] VSS[126] V13
G1 VSS[30] VSS[127] V15
G2 VSS[31] VSS[128] V24
G5 VSS[32] VSS[129] V27
G6 VSS[33] VSS[130] V28
G9 VSS[34] VSS[131] W6
G14 VSS[35] VSS[132] W24
G18 VSS[36] VSS[133] W25
G21 VSS[37] VSS[134] W26
G24 VSS[38] VSS[135] Y3
G25 VSS[39] VSS[136] Y24
G26 VSS[40] VSS[137] Y27
H3 VSS[41] VSS[138] Y28
H4 VSS[42] VSS[139] AA1
H5 VSS[43] VSS[140] AA24
H24 VSS[44] VSS[141] AA25
H27 VSS[45] VSS[142] AA26
H28 VSS[46] VSS[143] AB4
J1 VSS[47] VSS[144] AB6
J2 VSS[48] VSS[145] AB11
J5 VSS[49] VSS[146] AB14
J24 VSS[50] VSS[147] AB16
J25 VSS[51] VSS[148] AB19
J26 VSS[52] VSS[149] AB21
K24 VSS[53] VSS[150] AB24
K27 VSS[54] VSS[151] AB27
K28 VSS[55] VSS[152] AB28
L13 VSS[56] VSS[153] AC2
L15 VSS[57] VSS[154] AC5
L24 VSS[58] VSS[155] AC9
L25 VSS[59] VSS[156] AC11
L26 VSS[60] VSS[157] AD1
M3 VSS[61] VSS[158] AD3
M4 VSS[62] VSS[159] AD4
M5 VSS[63] VSS[160] AD7
M12 VSS[64] VSS[161] AD8
M13 VSS[65] VSS[162] AD11
M14 VSS[66] VSS[163] AD15
M15 VSS[67] VSS[164] AD19
M16 VSS[68] VSS[165] AD23
M17 VSS[69] VSS[166] AE2
M24 VSS[70] VSS[167] AE4
M27 VSS[71] VSS[168] AE8
M28 VSS[72] VSS[169] AE11
N1 VSS[73] VSS[170] AE13
N2 VSS[74] VSS[171] AE18
N5 VSS[75] VSS[172] AE21
N6 VSS[76] VSS[173] AE24
N11 VSS[77] VSS[174] AE25
N12 VSS[78] VSS[175] AF2
N13 VSS[79] VSS[176] AF4
N14 VSS[80] VSS[177] AF8
N15 VSS[81] VSS[178] AF11
N16 VSS[82] VSS[179] AF27
N17 VSS[83] VSS[180] AF28
N18 VSS[84] VSS[181] AG1
N24 VSS[85] VSS[182] AG3
N25 VSS[86] VSS[183] AG7
N26 VSS[87] VSS[184] AG11
P3 VSS[88] VSS[185] AG14
P4 VSS[89] VSS[186] AG17
P12 VSS[90] VSS[187] AG20
P13 VSS[91] VSS[188] AG25
P14 VSS[92] VSS[189] AH1
P15 VSS[93] VSS[190] AH3
P16 VSS[94] VSS[191] AH7
P17 VSS[95] VSS[192] AH12
P24 VSS[96] VSS[193] AH23
P27 VSS[97] VSS[194] AH27

U18B

PCI

E18 AD0 — REQ0# GNT0# — D7 REQ0#
C18 AD1
A16 AD2 — REQ1# GNT1# — E7 REQ1#
F18 AD3
E16 AD4 — REQ2# GNT2# — C16 REQ2#
A18 AD5
E17 AD6 — REQ3# GNT3# — D16 REQ3#
A17 AD7
A15 AD8 — REQ4#/GPIO22 — E13 REQ4# — T61
C14 AD9 — GNT4#/GPIO48 — A13 — T60
E14 AD10 — GPIO1/REQ5# — A14 REQ5# — T64
D14 AD11 — GPIO17/GNT5# — C8
B12 AD12
C13 AD13 — C/BE0# — D8
G15 AD14 — C/BE1# — B15
G13 AD15 — C/BE2# — C12
E12 AD16 — C/BE3# — D12
C11 AD17 — C15
D11 AD18 — IRDY# — A7 IRDY#
A11 AD19 — PAR — E10
A10 AD20 — PCIRST# — B18 — PCIRST# (20)
F11 AD21 — DEVSEL# — A12 DEVSEL#
F10 AD22 — PERR# — C9 PERR#
E9 AD23 — PLOCK# — E11 PLOCK#
D9 AD24 — SERR# — B10 SERR#
B9 AD25 — STOP# — E15 STOP#
A8 AD26 — TRDY# — E14 TRDY#
A6 AD27 — FRAME# — E16 FRAME#
C7 AD28
B6 AD29 — PLTRST# — C26 PLT_RST-R#
E6 AD30 — PCICLK — A9 PCLK_ICH — PCLK_ICH (2)
D6 AD31 — PME# — B19 — T16

Boot BIOS select
GNT5,4
01: SPI
10: PCI
11: LPC (Default)

Interrupt I/F

INTA# A3 — PIRQA# — GPIO2/PIRQE# — G8 INTE#
INTB# B4 — PIRQB# — GPIO3/PIRQF# — E7 INTF#
INTC# C5 — PIRQC# — GPIO4/PIRQG# — E8 INTG#
INTD# B5 — PIRQD# — GPIO5/PIRQH# — G7 INTH#

MISC

AE5 RSVD[1] — RSVD[6] AE9
AD5 RSVD[2] — RSVD[7] AG8
AG4 RSVD[3] — RSVD[8] AH8
AH4 RSVD[4] — RSVD[9] F21
AD9 RSVD[5] — MCH_SYNC# AH20 — MCH_ICH_SYNC# (7)

Stuff for XOR chain testing

R94 *1K/F_4 — ICH_TP3

ICH7-M

Pull-UP resistor

RP2 8.2K_10P8R +3V
REQ1# 6 — 5
REQ2# 7 — 4 — TRDY#
8 — 3 — STOP#
REQ3# 9 — 2 — FRAME#
+3V 10 — 1 — REQ4#

RP3 8.2K_10P8R +3V
IRDY# 6 — 5
REQ0# 7 — 4 — DEVSEL#
8 — 3 — PLOCK#
SERR# 9 — 2 — PERR#
+3V 10 — 1 — REQ5#

RP4 8.2K_10P8R +3V
INTG# 6 — 5
INTE# 7 — 4 — INTD#
INTF# 8 — 3 — INTC#
INTH# 9 — 2 — INTB#
+3V 10 — 1 — INTA#

RP5 8.2K_10P8R +3V_S5
6 — 5
OC4# 7 — 4 — OC0#
OC3# 8 — 3 — OC7#
OC2# 9 — 2 — OC6#
+3V_S5 10 — 1 — OC5#

CKL use 10Kohm

PCLK_ICH R327 *22_4 — C382 *10p/50V_4

Platform Reset

+3V — C385 *0.1u/10V_4

U20 — *TC7SH08FU

PLT_RST-R# — PLTRST# (7,12,18,20,21,22,23)

R333 100K_4

R336 0_4

repair@hotmail.com

Quanta Computer Inc.

PROJECT : ZG8

Size	Document Number	Rev
	ICH7-M (USB & DMI & PCIE & PCI)	1A

Date: Monday, January 19, 2009 Sheet 11 of 33

ICH7-M(CLG)

12

U18C — SMB: SMBCLK, SMBDATA, LINKALERT#, SMLINK0, SMLINK1; SATA GPIO: GPIO21/SATA0GP, GPIO19/SATA1GP, GPIO36/SATA2GP, GPIO37/SATA3GP; Clocks: RI#, SPKR, SUS_STAT#, SYS_RST#, CLK14, CLK48, SUSCLK; SYS GPIO Power MGT: GPIO0/BM_BUSY#, GPIO11/SMBALERT#, GPIO18/STPPCI#, GPIO20/STPCPU#, GPIO26, GPIO27, GPIO28, GPIO32/CLKRUN#, GPIO33/AZ_DOCK_EN#, GPIO34/AZ_DOCK_RST#, WAKE#, SERIRQ, THRM#, VRMPWRGD, SLP_S3#, SLP_S4#, SLP_S5#, PWROK, GPIO16/DPRSLPVR, TP0/BATLOW#, PWRBTN#, LAN_RST#, RSMRST#; GPIO: GPIO6, GPIO7, GPIO8, GPIO9, GPIO10, GPIO12, GPIO13, GPIO14, GPIO15, GPIO24, GPIO25, GPIO35, GPIO38, GPIO39

ICH7-M

GPIO025 /Suspend rail is a HW strap , don't pull down .

U18F — ICH7-M

ICH PWROK

U12 TC7SH08FU; (4,7,23,26) IMVP_PWRGD; (23) ECPWROK; ICH_PWROK; R270 10K_4

CLK GEN & PWR

VR PWRGD

(26) VR_PWRGD_CK410#; Q4 2N7002E; R14 100K_4; VR_PWRGD_CK410 (2)

M/B ID Select

12/17 ver0C
Remove R92

MB ID: 001

0202 M/B ID change

0117 change

1/7 Change footprint for SMT

Quanta Computer Inc.
PROJECT : ZG8

Size	Document Number	Rev
	ICH7-M (POWER & GND)	1A

Date: Thursday, February 05, 2009 Sheet 12 of 33

DDR II SOCKET(DDR)

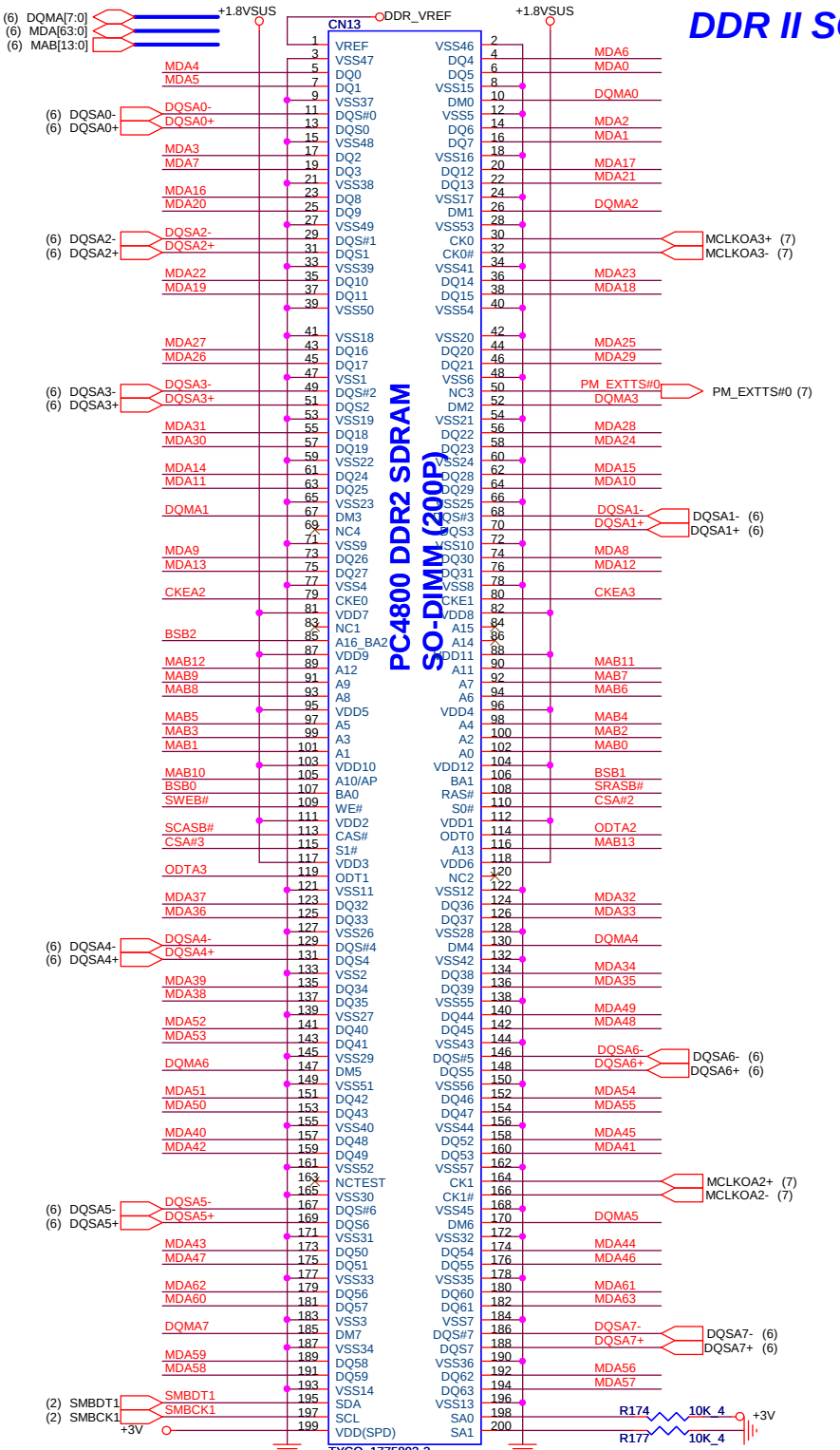

STD H: 4.0mm

SMbus address A1

CLOCK 1,2

CKE 2,3

Close to DIMM

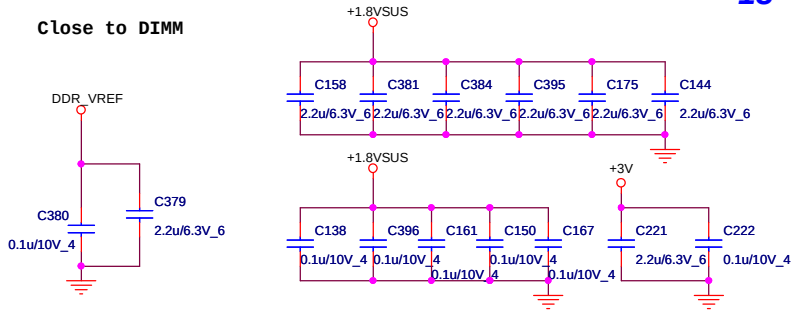

Termination resistor

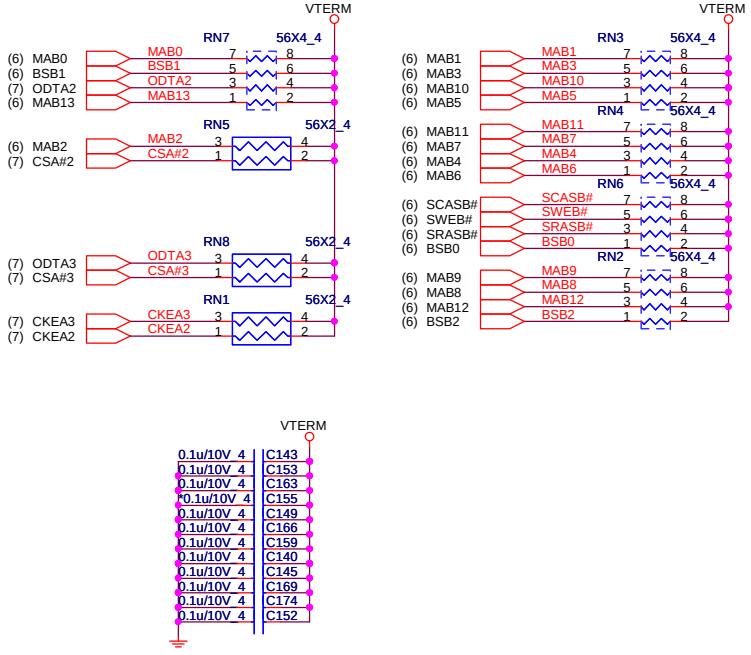

Quanta Computer Inc.		
PROJECT ZG8		
Size	Document Number: DDR2 SO-DIMM(200P)	Rev 1A
Date: Monday, February 02, 2009	Sheet 13 of 33	

hexxinf@hotmail.com

HALL SENSOR(HSR)

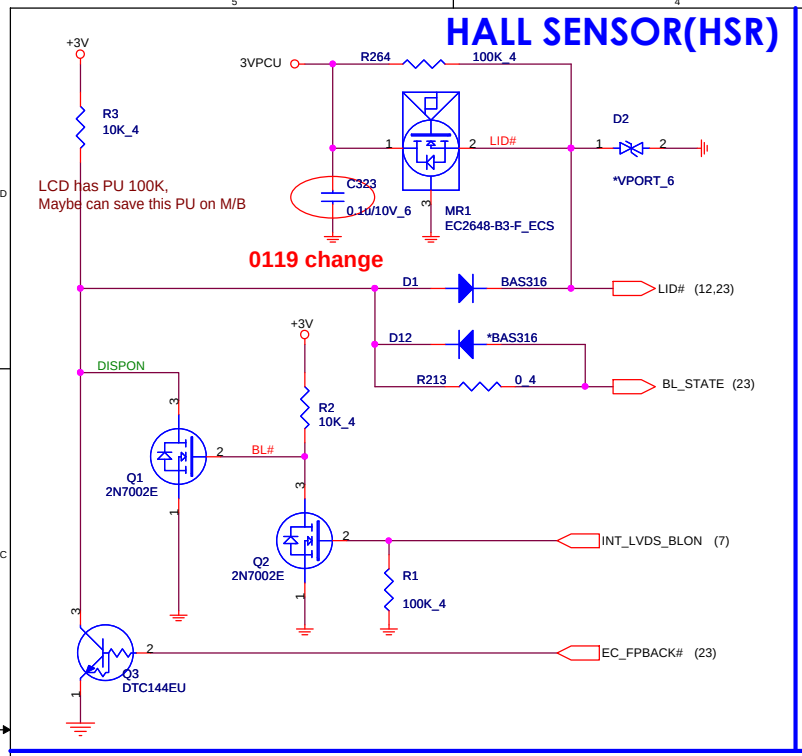

LCD POWER SWITCH(LDS)

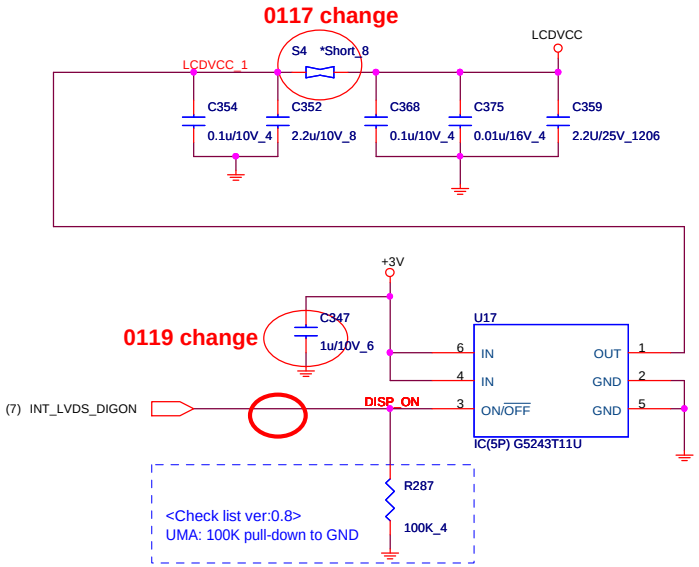

CAMERA POWER(CCD)

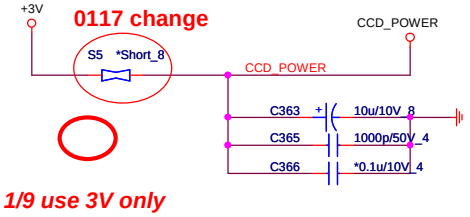

LCD MODULE(LDS)

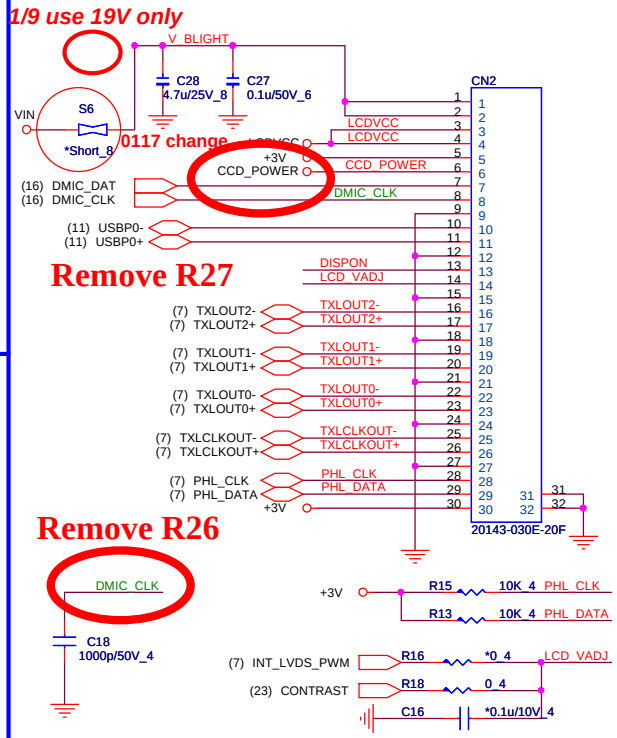

CRT(CRT)

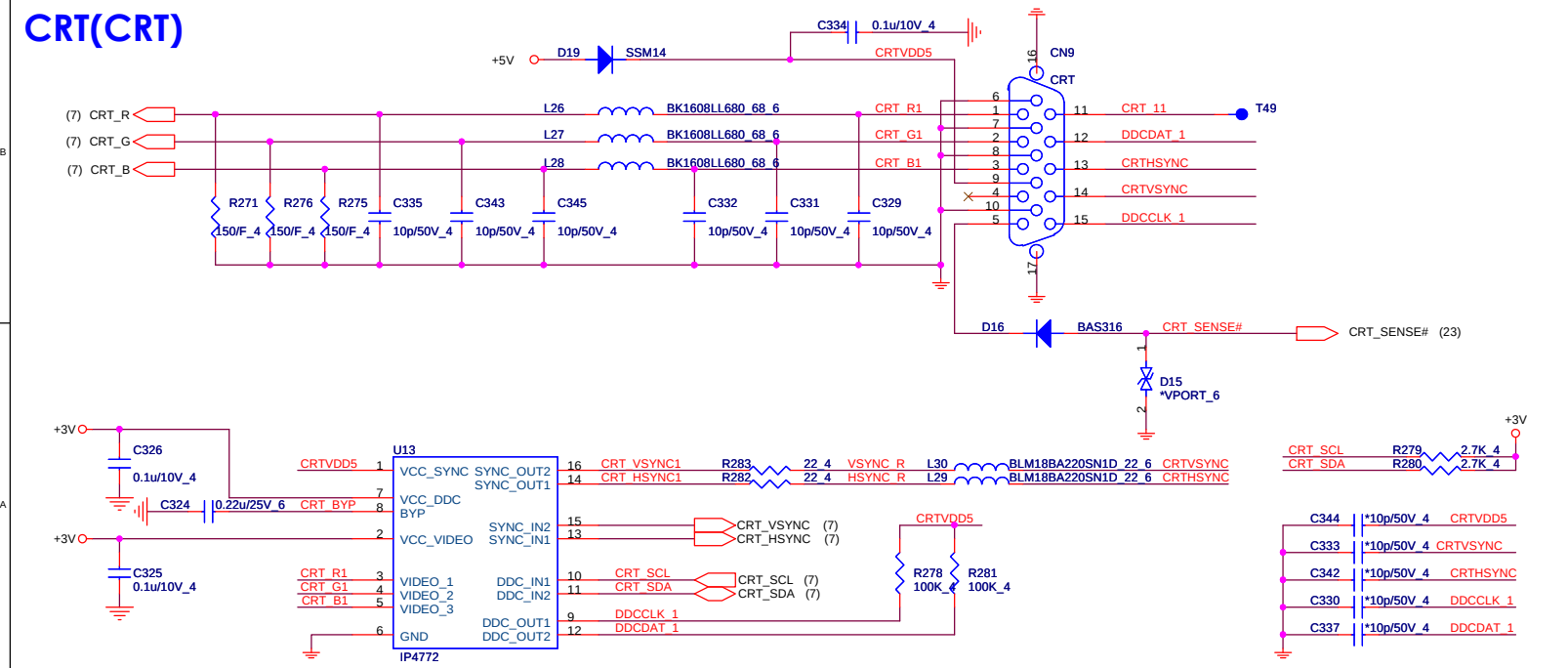

Quanta Computer Inc.		
PROJECT : ZG8		
Size	Document Number: CRT/LVDS	Rev 1A
Date: Monday, February 02, 2009	Sheet 14 of 33	

KEYBOARD(KBC)

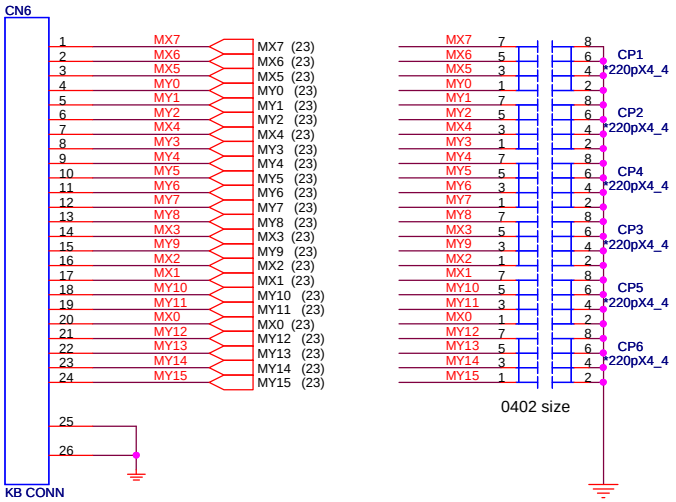

BLUETOOTH(BTM)

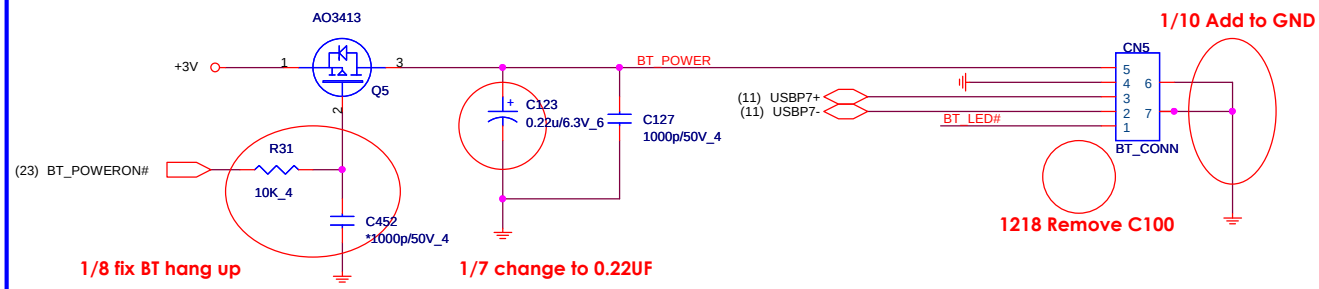

Power On Connector(UIF)

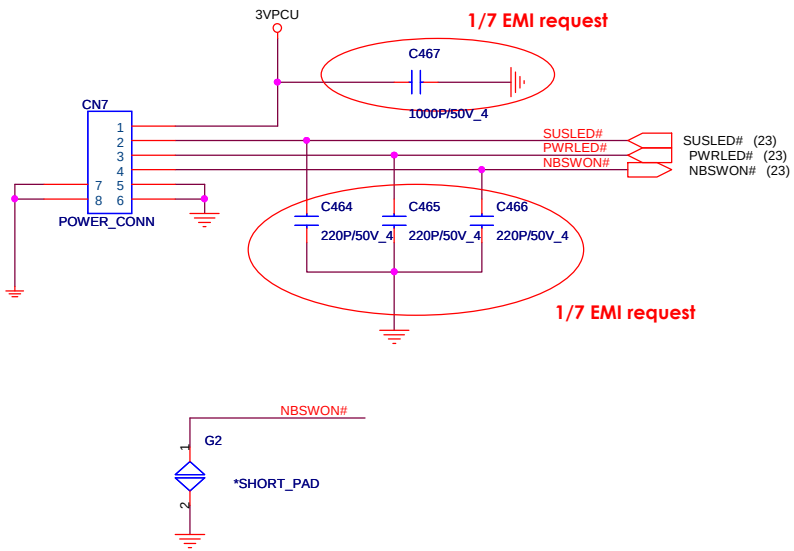

TOUCH PAD(TPD)

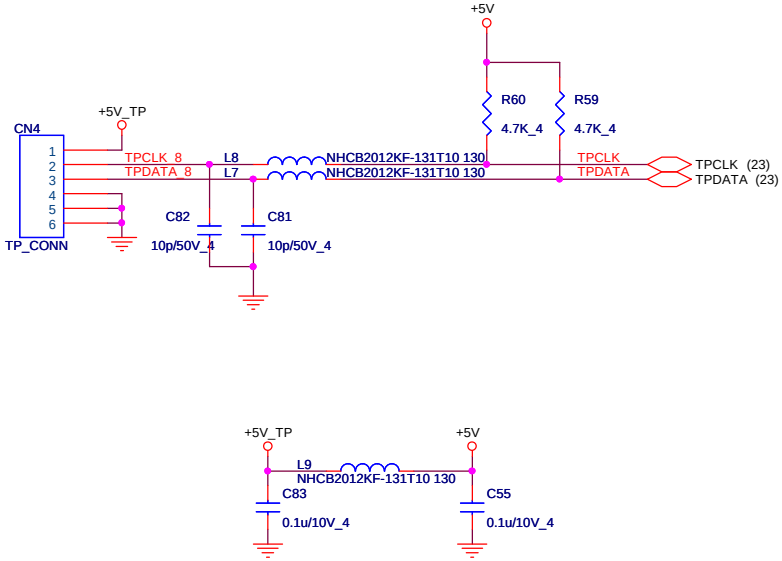

LED CONNECTOR(KBC)

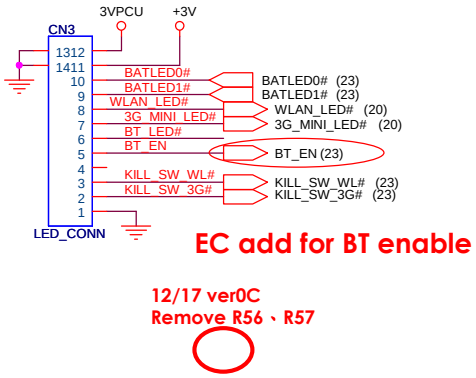

Quanta Computer Inc.

PROJECT : ZG8

Size	Document Number	Rev
	KB/BT/TP/LED/Power Connector	1A

Date: Thursday, February 05, 2009 Sheet 15 of 33

hexainf@hotmail.com

CODEC(ADO)

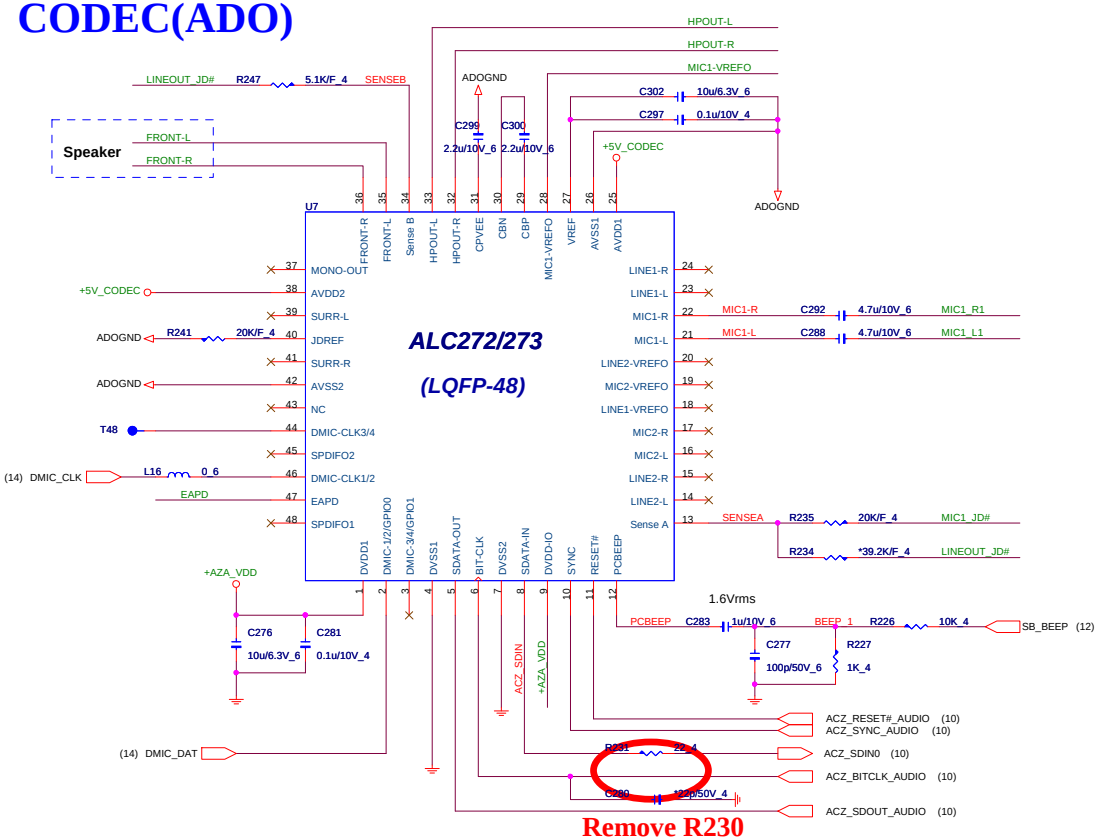

Codec Power(ADO)

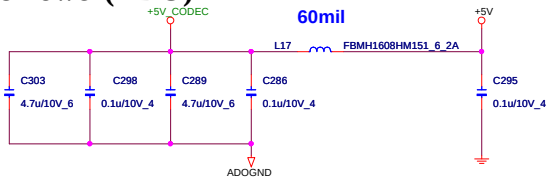

HDA Power(ADO)

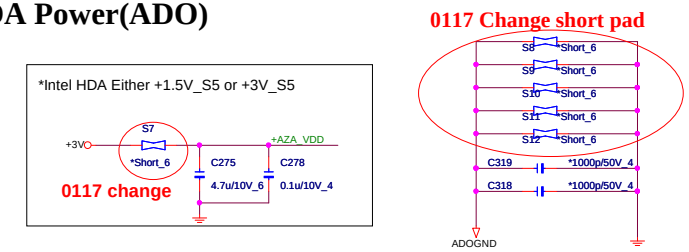

Earphone(AMP)

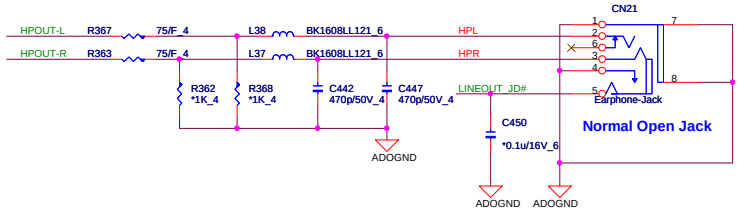

Speaker Amplifier(AMP)

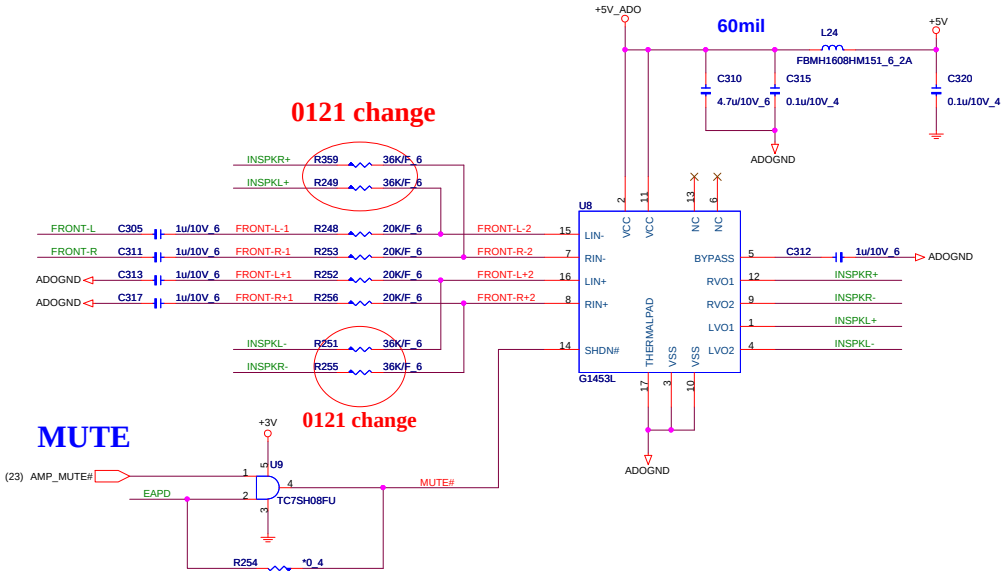

System MIC(AMP)

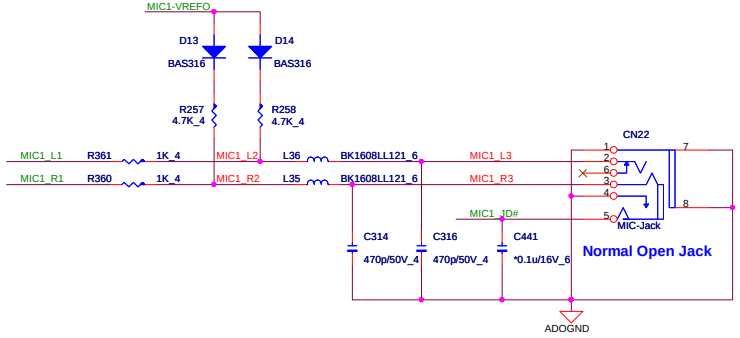

Speaker(AMP)

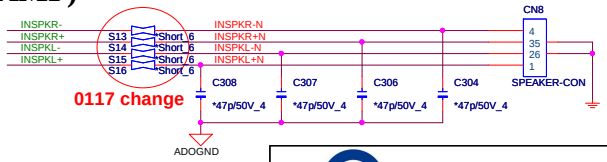

Quanta Computer Inc.		
PROJECT : ZG8		
Size	Document Number: Audio Codec/Audio AMP	Rev 1A
Date: Thursday, February 05, 2009	Sheet 16 of 33	

USB(USB)

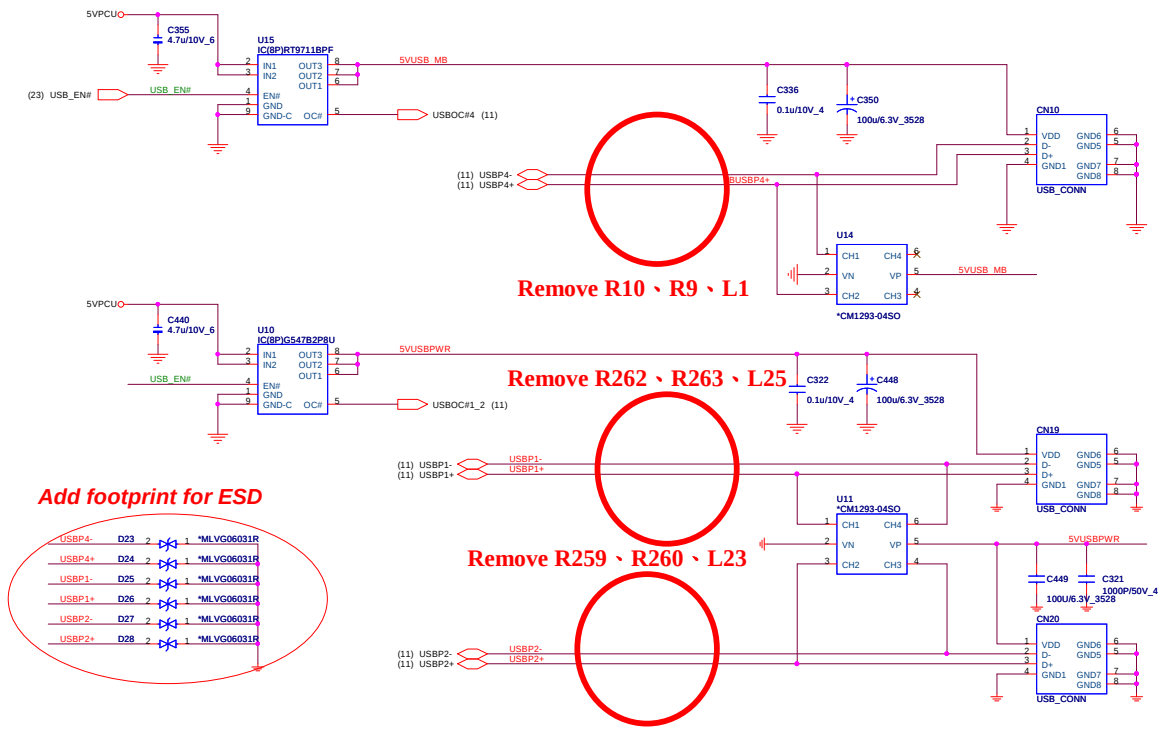

Add footprint for ESD

EMI reserve

1217 EMI add

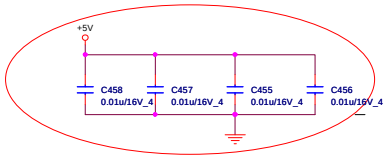

1217 EMI add

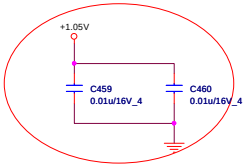

1217 EMI add

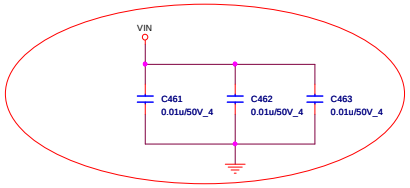

1217 add for ESD

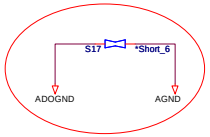

0117 change

LED on M/B(UIF)

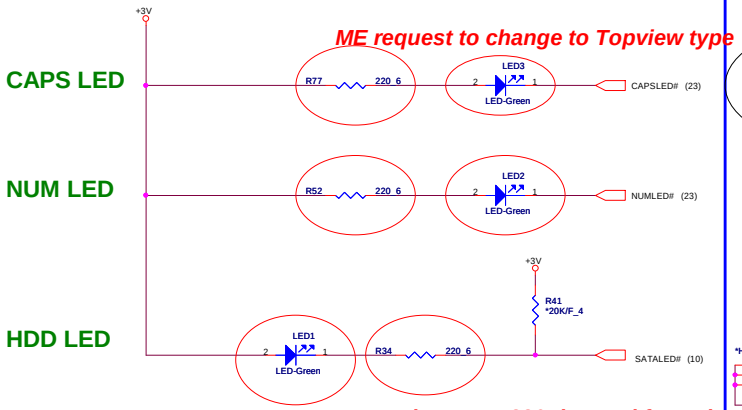

SCREW HOLE

1218 change

1218 change

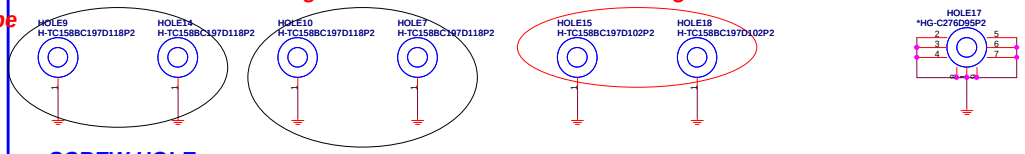

SCREW HOLE

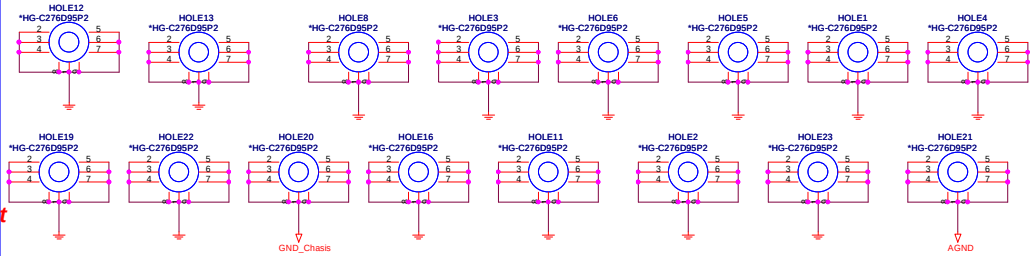

LED on Main Side:

- *Charger (Green/ Abler)*
- *Storage HDD/ SSD/ Media (Gereen)*
- *Caps (Green)*
- *Num (Green)*

Quanta Computer Inc.		
PROJECT : Z68		
Size	Document Number: USB on Board/LED/SW/HOLE	Rev: 1A
Date: Thursday, February 12, 2009	Sheet 17 of 33	

hexainf@hotmail.com

LAN

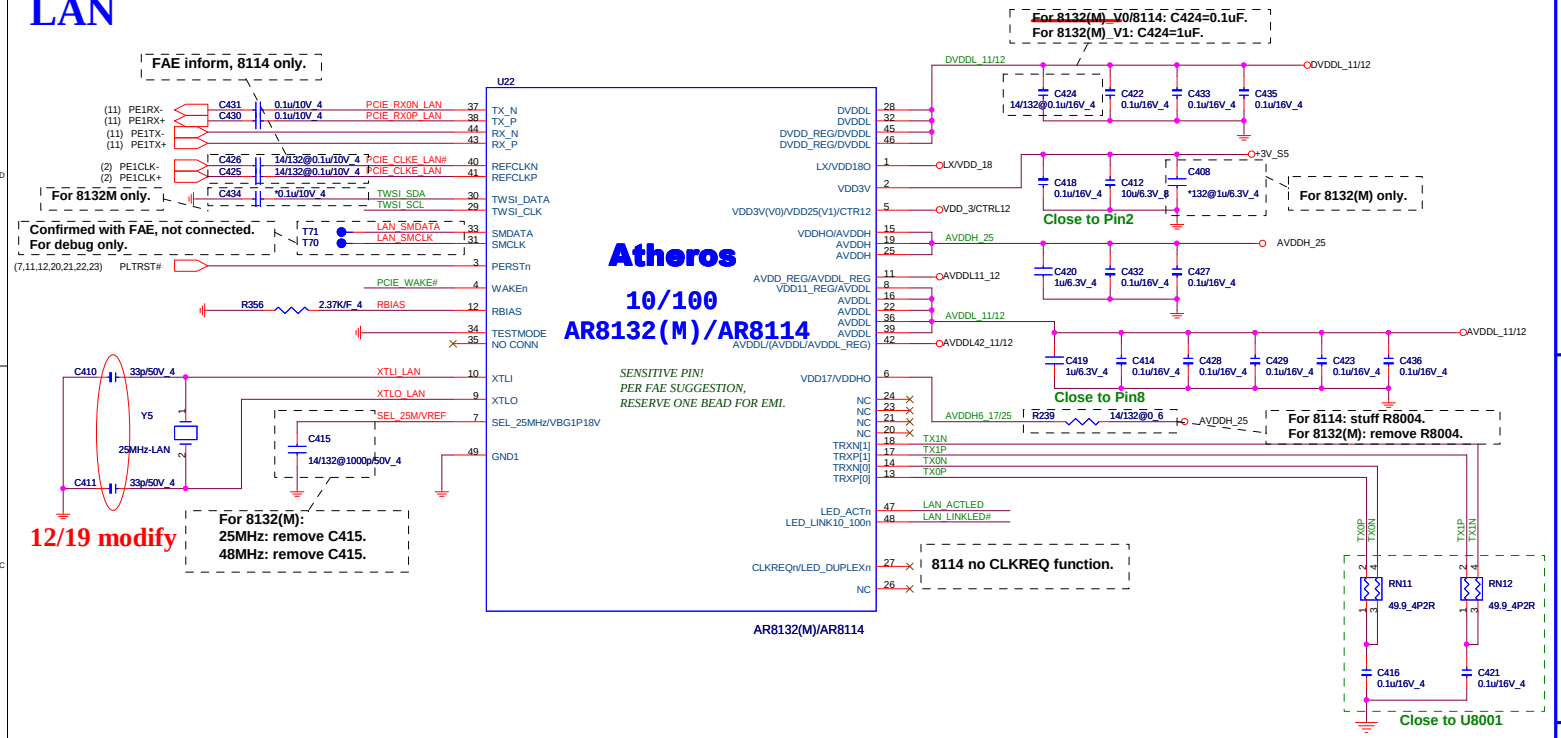

12/19 modify

For 8132(M):
25MHz: remove C415.
48MHz: remove C415.

If overclocking: remove R354.
If not overclocking: remove R355.

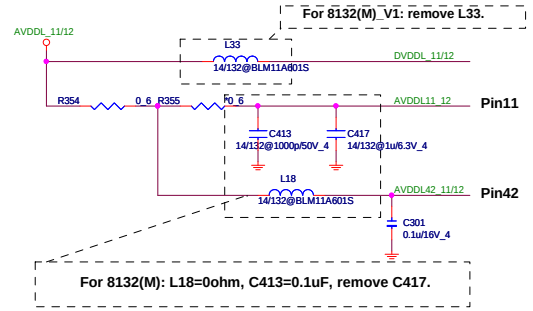

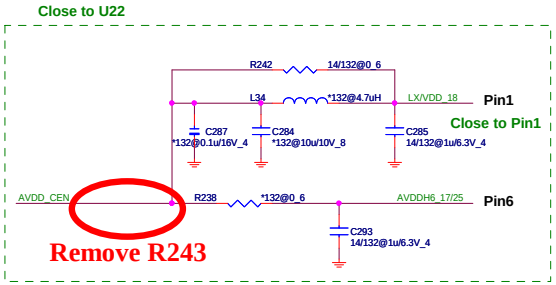

For 8114: remove L34, C284, C287, R238, C293=1uF.
For 8132(M)_V1: remove R242, C285. C293=0.1uF

1217 For EC

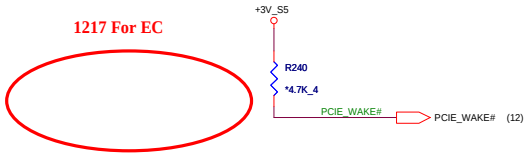

+3V_S5	2	VDD3V	ATHEROS AR8114	CTR12	5	Control +1.2V
+1.2V analog power	8/16/22/36/39/42	AVDDL		AVDDL_REG	11	+1.2V regulator output (For pin 42 when overclocking)
+1.2V digital power	28/32/45/46	DVDDL		VDD18O	1	+1.8V regulator output (For transformer center tap)
+2.5V analog power	15/19/25	AVDDH		VDDHO	6	+2.5V regulator output (For chip use)

+3V_S5	2/5	VDD3V	ATHEROS AR8132(M)	AVDDL_REG	11	+1.2V regulator output (For pin 42 when overclocking)
+1.1/1.15V analog power	16/22/36/39/42	AVDDL		VDD11_REG	8	+1.1/1.15V regulator output (For chip use)
+1.1V digital power	28/32	DVDDL		DVDD_REG	45/46	+1.1V regulator output (For chip use)
+2.5V analog power	19/25	AVDDH		VDDHO	15	+2.5V regulator output (For chip use)
+1.7V analog power	6	VDD17		LX	1	+1.7V (For transformer center tap and pin6)

For EC control mount R246,Q18/del R224 with 8114

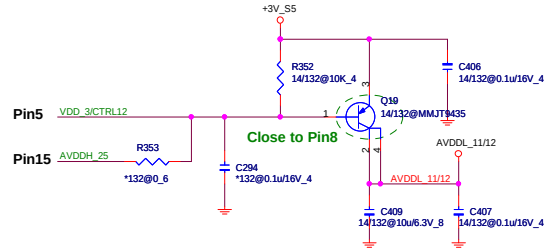

For 8114: remove R353, C294.
For 8132(M)_V1: remove R352, C406, C409, C407, Q19.

TRANSFORMER

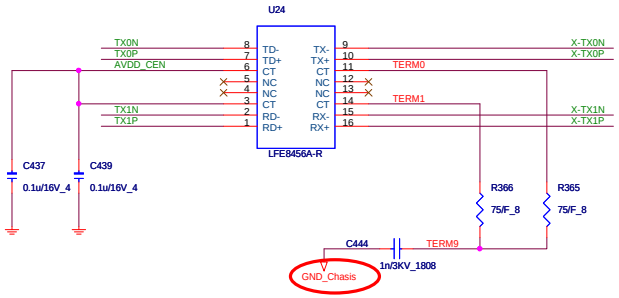

Change C451 footprint

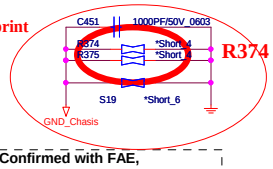

R374、R375 use short pad

Confirmed with FAE,
For 8132(M)/8114: stuff R364

0120 ver 0D modify

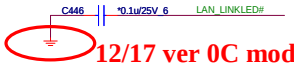

12/17 ver 0C modify

RJ45

Confirmed with FAE,
For 8132(M)/8114: LED_ACT= active high

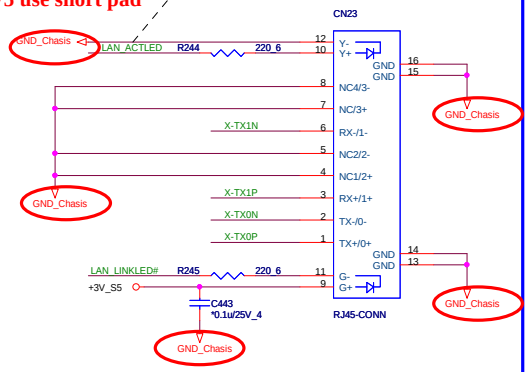

EEPROM

For 8132/8114:
If EEPROM not applied, remove all.
If EEPROM applied, stuff all.
For 8132M: del U23, R357, R358=0 ohm.

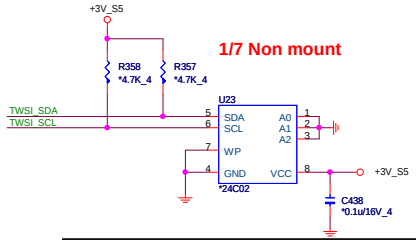

Quanta Computer Inc.
PROJECT : ZG8

Size	Document Number	Rev
	LAN_Atheros_AR8132(M)/AR8114	1A

Date: Thursday, February 05, 2009 Sheet 18 of 33

2.5" SATA HDD(HDD)

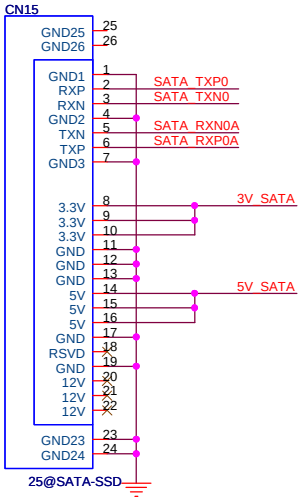

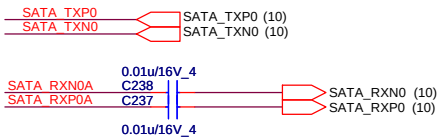

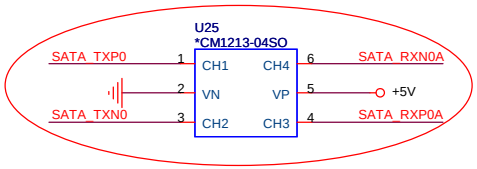

0119 add for ESD and place near SATA conn

1.8" SATA HDD(TOSHIBA)

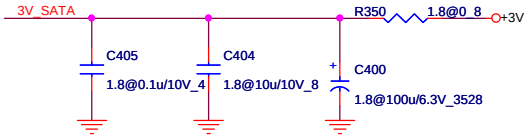

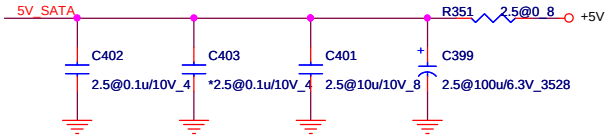

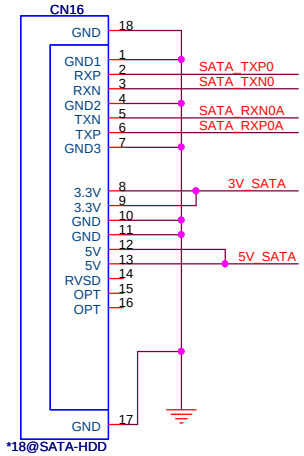

0120 : CN15 PIN25 & 26 IS NP, NO contact to GND.

ZT4 card connector

Quanta Computer Inc.

PROJECT : ZG8

Size	Document Number	Rev
	SATA-HDD/SSD	1A

Date: Monday, February 02, 2009 Sheet 19 of 33

hexainf@hotmail.com

Mini Card(MPC)

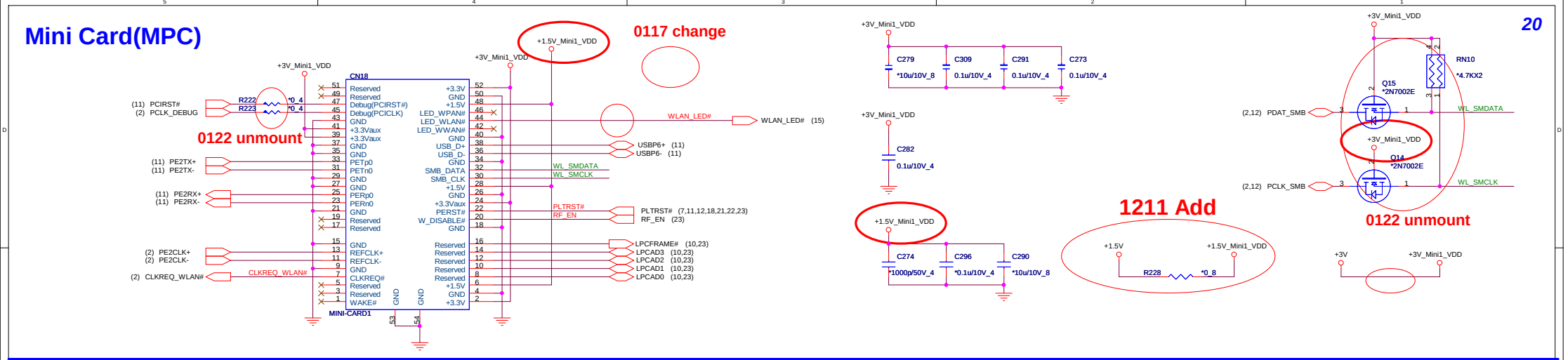

Mini Card 2(MNC)

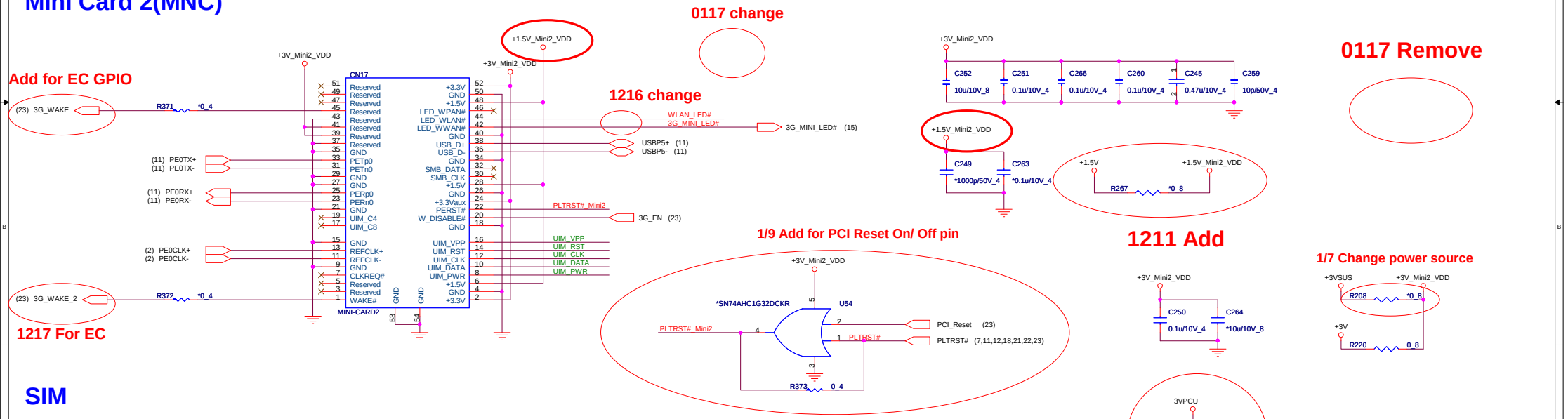

SIM

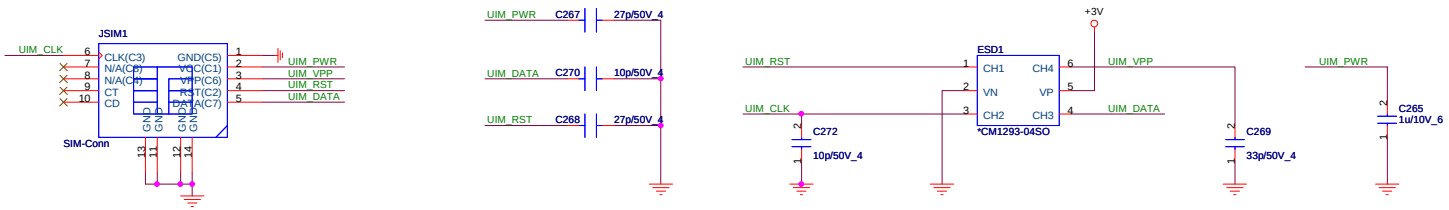

Quanta Computer Inc.		
PROJECT : ZG8		
Size	Document Number	Rev
	Mini-Card/WL/3G/SIM	0A
Date: Thursday, February 12, 2009	Sheet 20 of 33	

RTS5159(MMC)

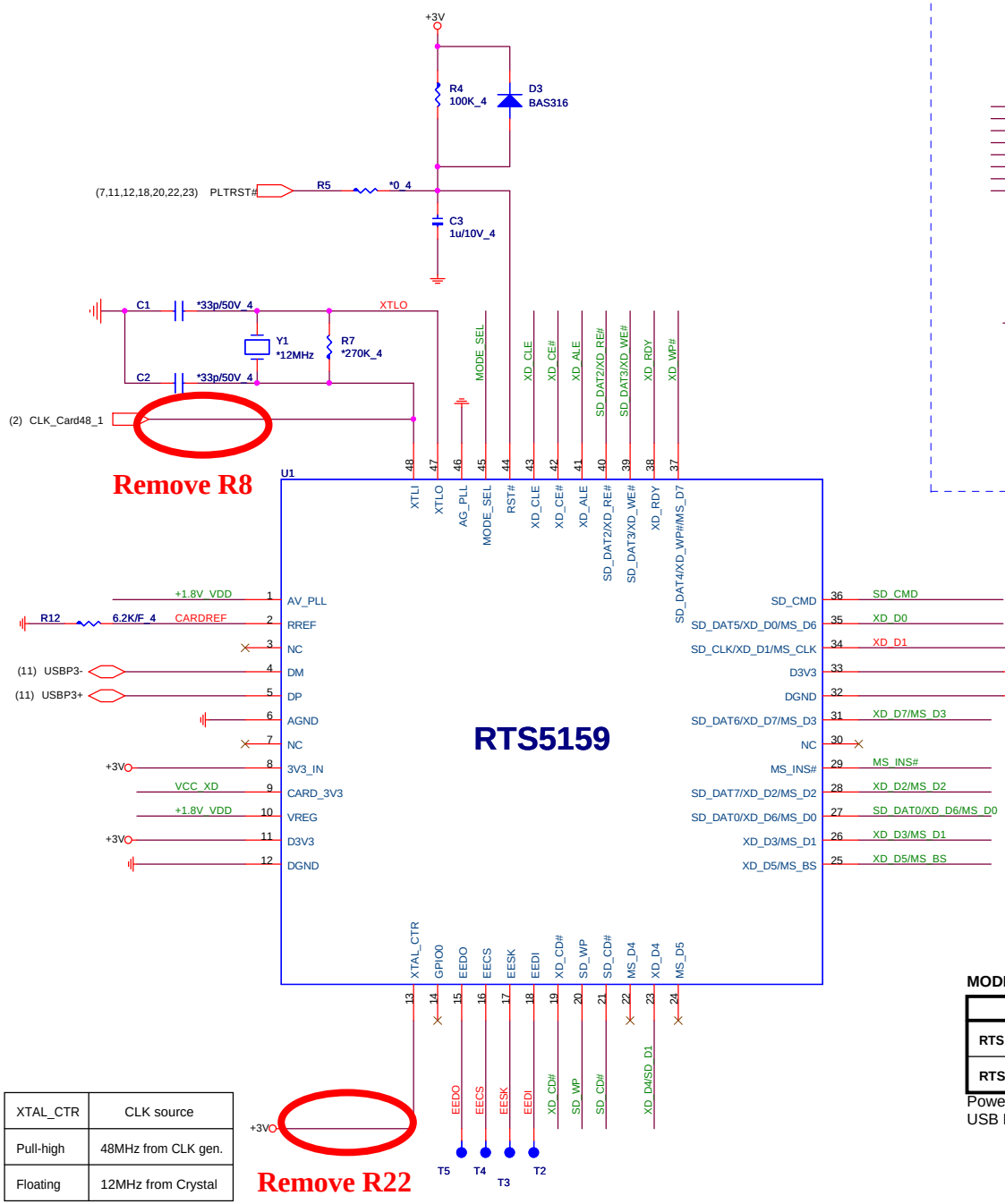

XTAL_CTR	CLK source
Pull-high	48MHz from CLK gen.
Floating	12MHz from Crystal

4 IN 1 CARD READER

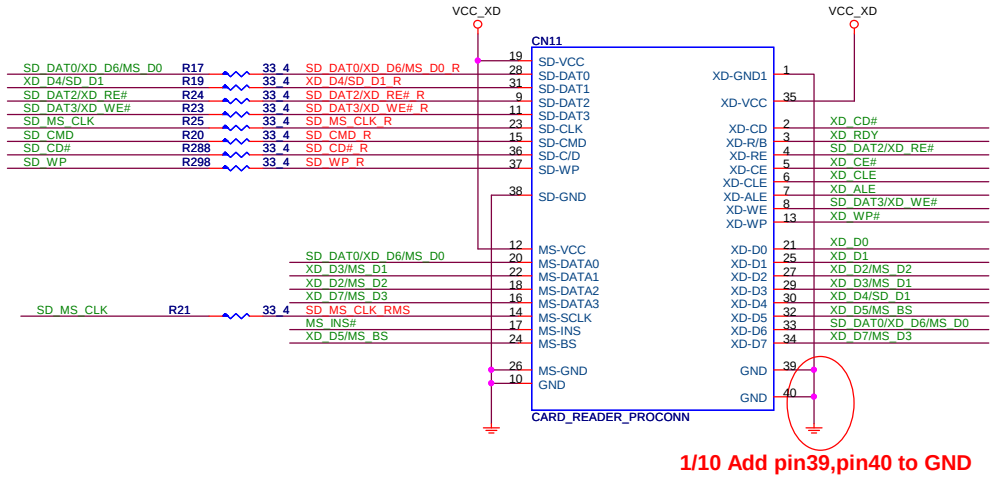

1/10 Add pin39,pin40 to GND

0117 change

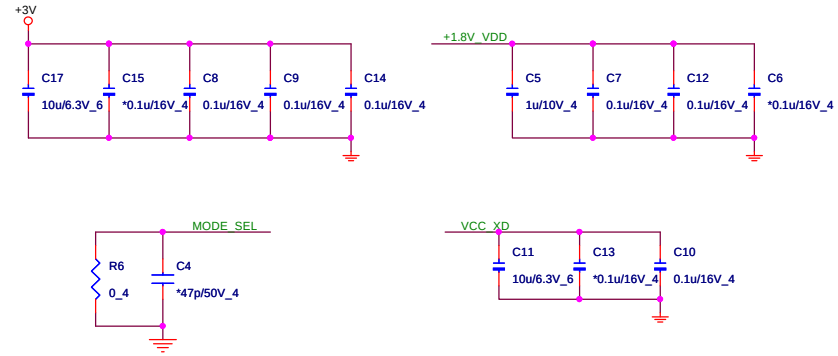

MODE_SEL Table (Please refer to Realtek Application Notes for more detail description)

	R9016	C9016	Power mode	SD_D1 Out From
RTS 5158E	NC	NC	Power Saving	Pin23
RTS 5159	0 ohm	NC	Power Saving	Pin23

Power Saving mode need install Realtek icon driver.
USB Hotfix KB941600 is also needed for Vista SP0 but SP1.

Quanta Computer Inc.
PROJECT : ZG8

Size	Document Number	Rev
	RTS5159 (Card Reader)	1A

Date: Monday, February 02, 2009 Sheet 21 of 33

hexainf@hotmail.com

JMB385 SIDO(MMC)

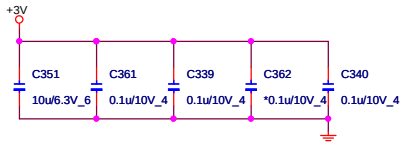

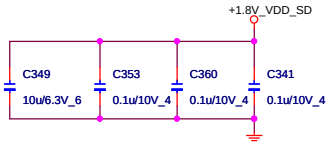

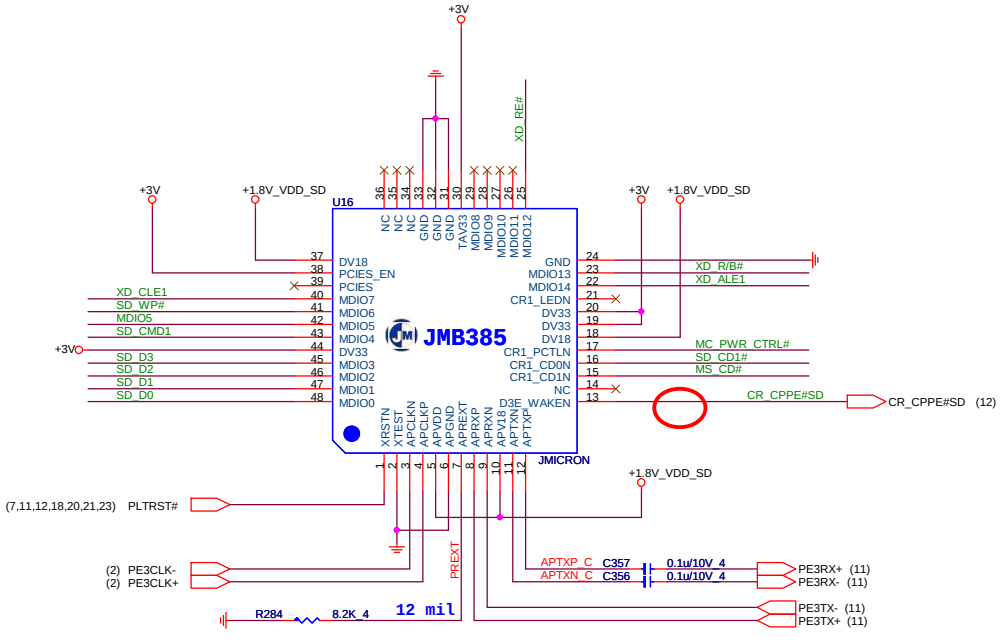

For APVDD(pin5)

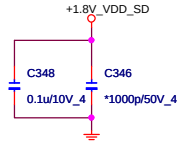

APVDD(pin5) must put C346/1000pF close to APVDD(pin5) (length must under 120mil) and trace width = 20mil, after C346, pls put one more 0.1uF for it.

SD CONNDETOR

Use 0805 type and over 20 mils trace width on both side

Memory Card Power Supply

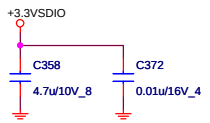

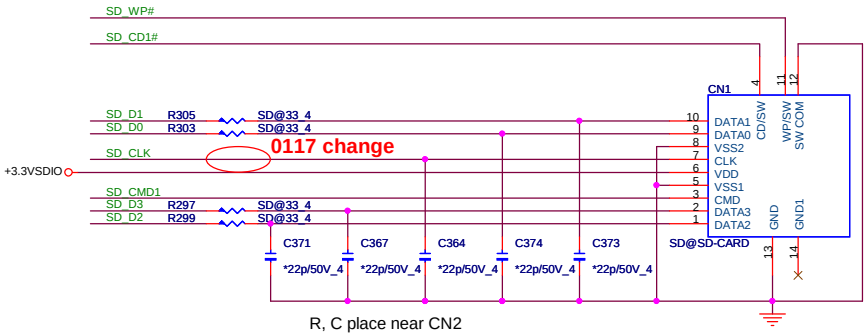

R, C place near CN2

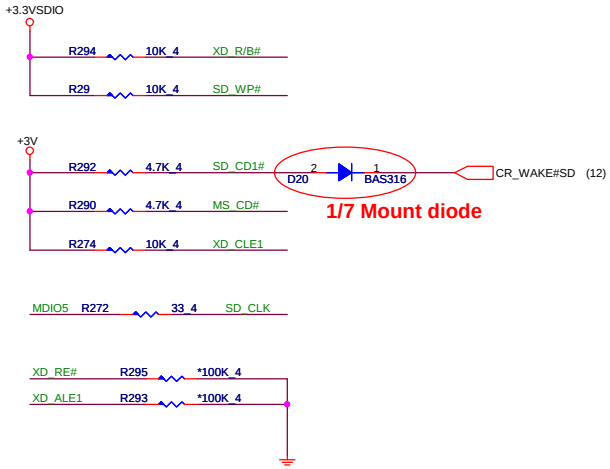

Quanta Computer Inc.

PROJECT : ZG8

Size	Document Number	Rev
	JMB385 SIDO	1A

Date: Thursday, February 05, 2009 Sheet 22 of 33

EC(EC)

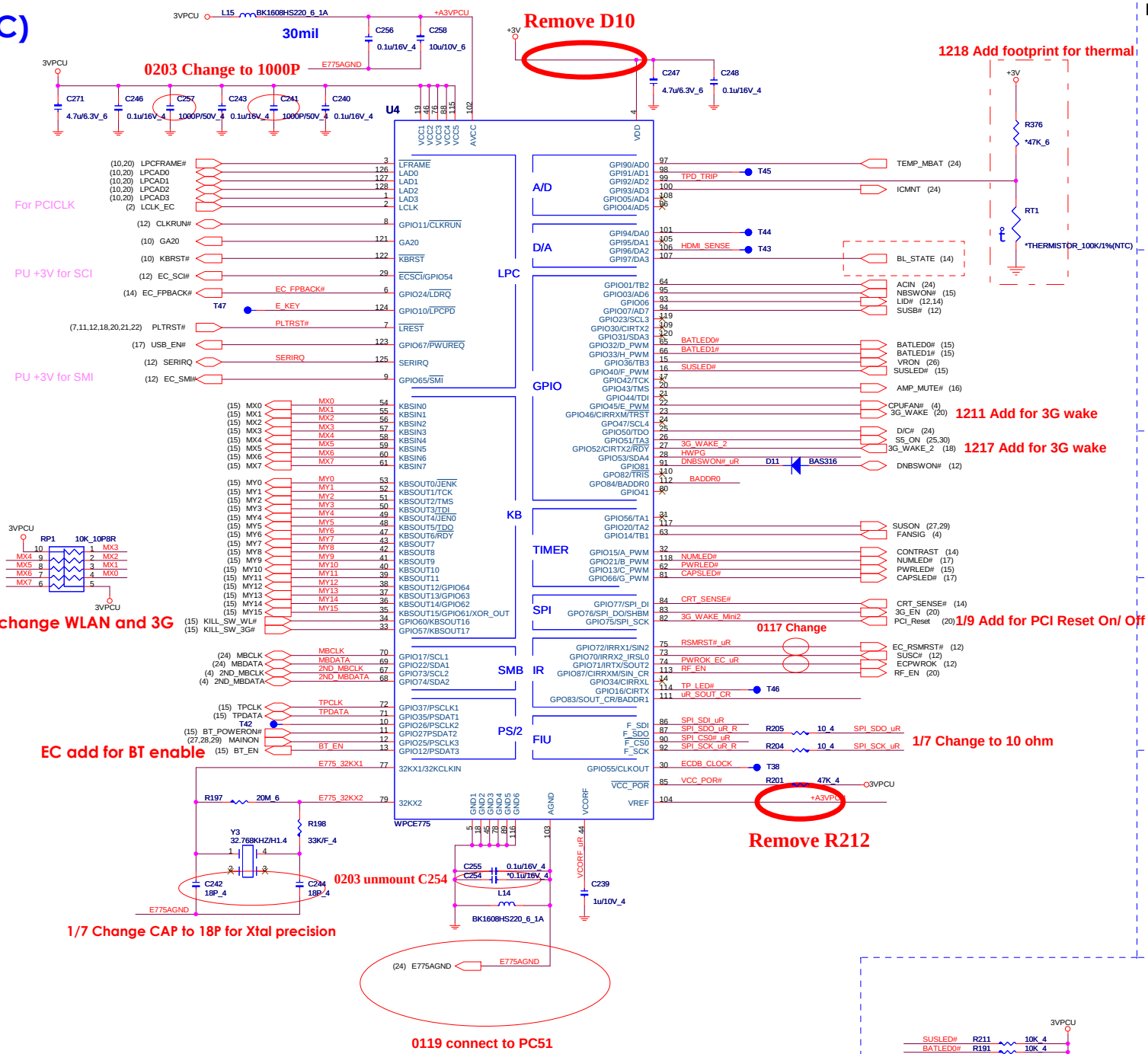

I/O ADDRESS SETTING

23

BADDR1-0	I/O Address	
	Index	Data
0 0	XOR TREE TEST MODE	
0 1	CORE DEFINED	
1 0	2Eh	2Fh
1 1	164Eh	164Fh

SHBM=0: Enable shared memory with host BIOS

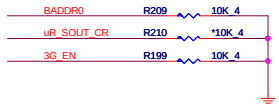

SM BUS PU

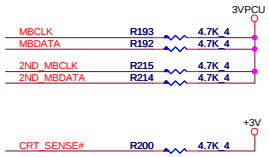

ACER ID

1/9 use +3V_S5 only

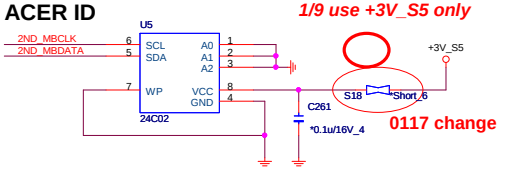

SPI FLASH

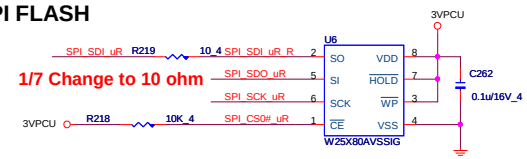

1/7 Change to 10 ohm

1/13 Comfirm by vendor mail :
If the Southbridge enables 'Long Wait Abort' by default, the flash device should be 50MHz (or faster)

HWPG

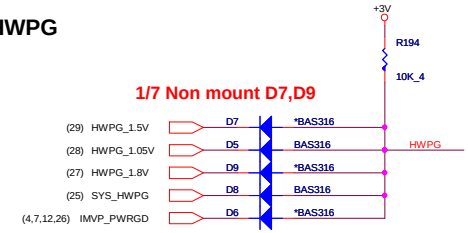

INTERNAL KEYBOARD STRIP SET

hexinfo@hotmail.com

Quanta Computer Inc.
PROJECT : ZG8
Size | Document Number | Rev
WPCE775C_0DG & FLASH | 1A
Date: Thursday, February 05, 2009 | Sheet 23 of 33

Charger(DCD)

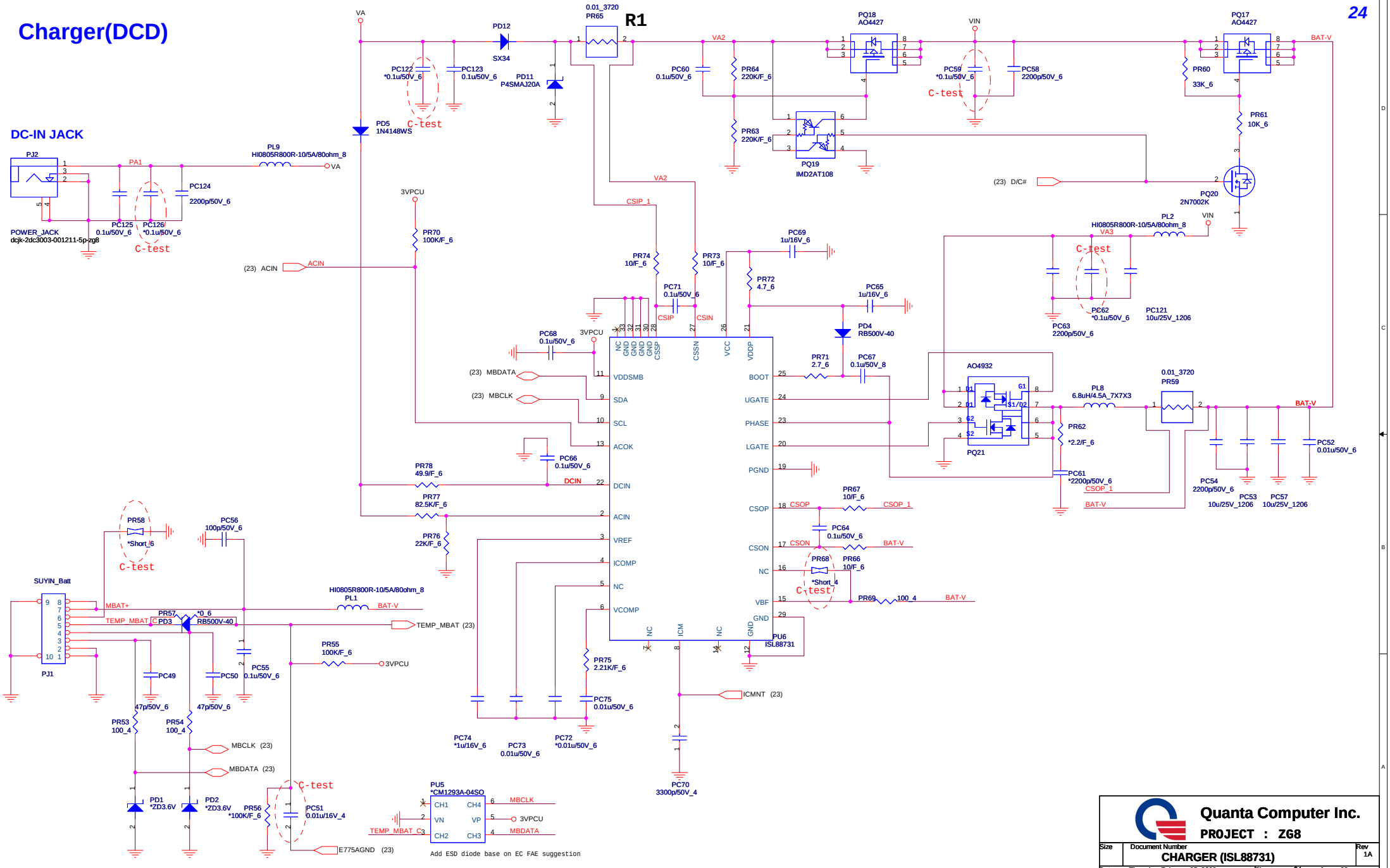
DC-IN JACK
PJ2
POWER_JACK
dcjk-2dc3003-001211-5p-zg8
PA1
PL9
HI0805R800R-10/5A/80ohm_8
VA
PC124
2200p/50V_6
PC125
0.1u/50V_6
PC126/
*0.1u/50V_6
C-test
PD5
1N4148WS
PC122
*0.1u/50V_6
PC123
0.1u/50V_6
PD12
SX34
PD11
P4SMAJ20A
0.01_3720
PR65
R1
VA2
PC60
0.1u/50V_6
PR64
220K/F_6
PR63
220K/F_6
PQ18
AO4427
PQ19
IMD2AT108
VIN
PC59
*0.1u/50V_6
PC58
2200p/50V_6
PQ17
AO4427
BAT-V
PR60
33K_6
PR61
10K_6
(23) D/C#
PQ20
2N7002K
3VPCU
PR70
100K/F_6
(23) ACIN
ACIN
CSIP_1
PR74
10/F_6
PR73
10/F_6
PC71
0.1u/50V_6
CSIP
CSIN
PR72
4.7_6
PC69
1u/16V_6
PC65
1u/16V_6
PD4
RB500V-40
PC68
0.1u/50V_6
(23) MBDATA
(23) MBCLK
PC66
0.1u/50V_6
PR78
49.9/F_6
DCIN
PR77
82.5K/F_6
PR76
22K/F_6
PR71
2.7_6
PC67
0.1u/50V_8
PL2
HI0805R800R-10/5A/80ohm_8
VA3
PC62
*0.1u/50V_6
PC121
10u/25V_1206
PC63
2200p/50V_6
AO4932
PQ21
PL8
6.8uH/4.5A_7X7X3
PR62
*2.2/F_6
PC61
*2200p/50V_6
CSOP_1
0.01_3720
PR59
PC52
0.01u/50V_6
PC54
2200p/50V_6
PC53
10u/25V_1206
PC57
10u/25V_1206
PR67
10/F_6
CSOP
CSON
PC64
0.1u/50V_6
PR66
10/F_6
PR68
*Short_4
PR69
100_4
PU6
ISL88731
PR75
2.21K/F_6
PC75
0.01u/50V_6
ICMNT (23)
PC70
3300p/50V_4
PC74
*1u/16V_6
PC73
0.01u/50V_6
PC72
*0.01u/50V_6
PR58
*Short_6
PC56
100p/50V_6
SUYIN_Batt
PJ1
MBAT+
TEMP_MBAT
PR57
*0_6
PD3
RB500V-40
HI0805R800R-10/5A/80ohm_8
PL1
TEMP_MBAT (23)
PR55
100K/F_6
PC55
0.1u/50V_6
PC49
47p/50V_6
PC50
47p/50V_6
PR53
100_4
PR54
100_4
MBCLK (23)
MBDATA (23)
PD1
*ZD3.6V
PD2
*ZD3.6V
PR56
*100K/F_6
PC51
0.01u/16V_4
E775AGND (23)
PU5
*CM1293A-04SO
CH1
CH4
VN
VP
CH2
CH3
TEMP_MBAT_C
MBCLK
3VPCU
MBDATA
Add ESD diode base on EC FAE suggestion
Quanta Computer Inc.
PROJECT : ZG8
Size
Document Number
CHARGER (ISL88731)
Rev
1A
Date: Thursday, February 05, 2009
Sheet 24 of 33

5V/3V(DCD)

For ISL6237 ADJ
mount PR44 , PR145 , PR138 , PR141
No mount PR43 , PR45

For ISL6237 & RT8206 Fix
mount PR44 , PR138 , PR145
No mount PR43 , PR45

For RT8206 ADJ
mount PR43 , PR45 , PR138 , PR141
No mount PR44 , PR145

For TPS51427
PC43 mount 1u/6.3V_4 (CH5101K9B01)

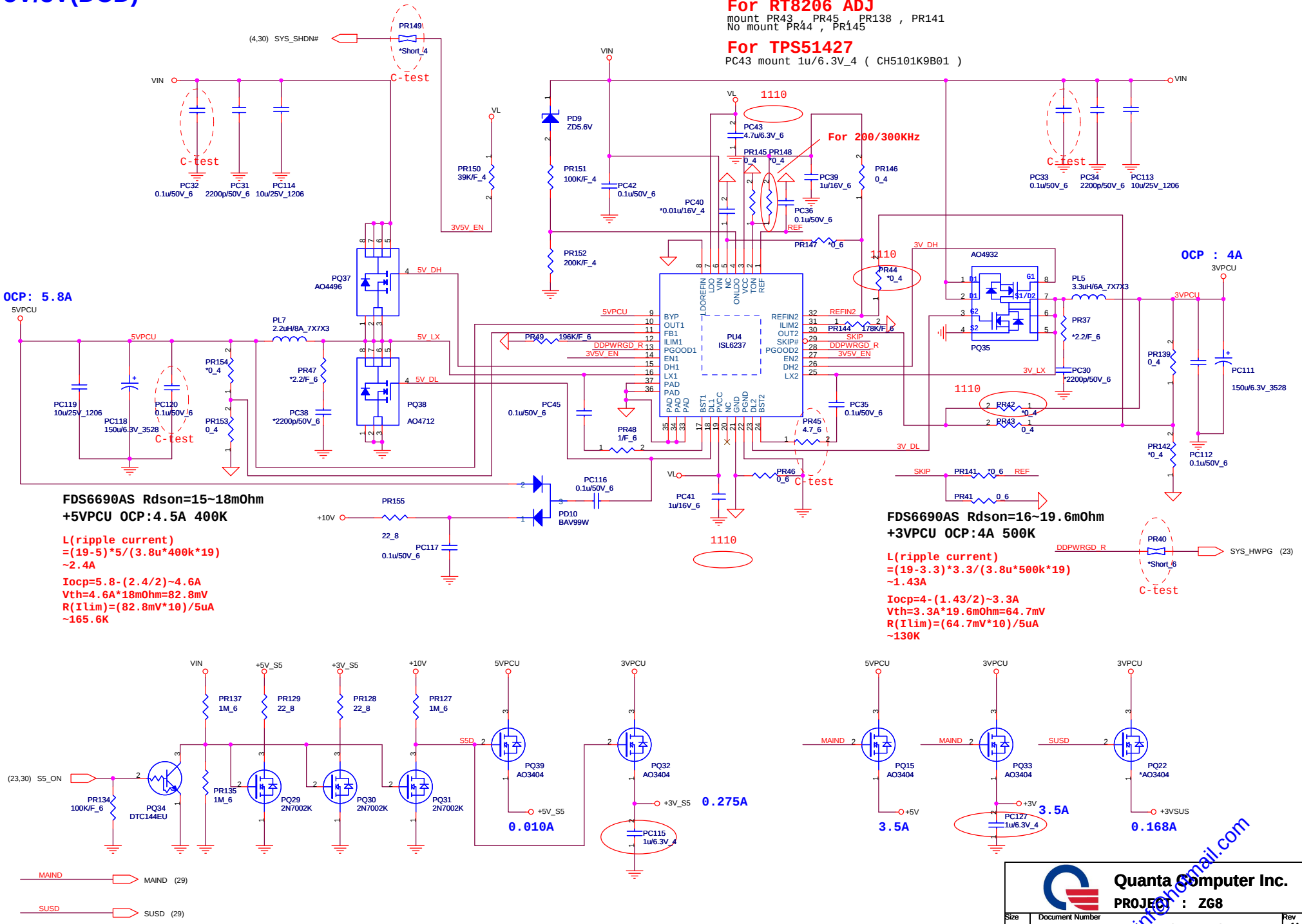

Quanta Computer Inc.
PROJECT : ZG8

Size	Document Number	Rev
	SYSTEM 5V/3V (ISL6237)	1A

Date: Thursday, February 12, 2009 Sheet 25 of 33

hetianfeng@gmail.com

Vcore(DCD)

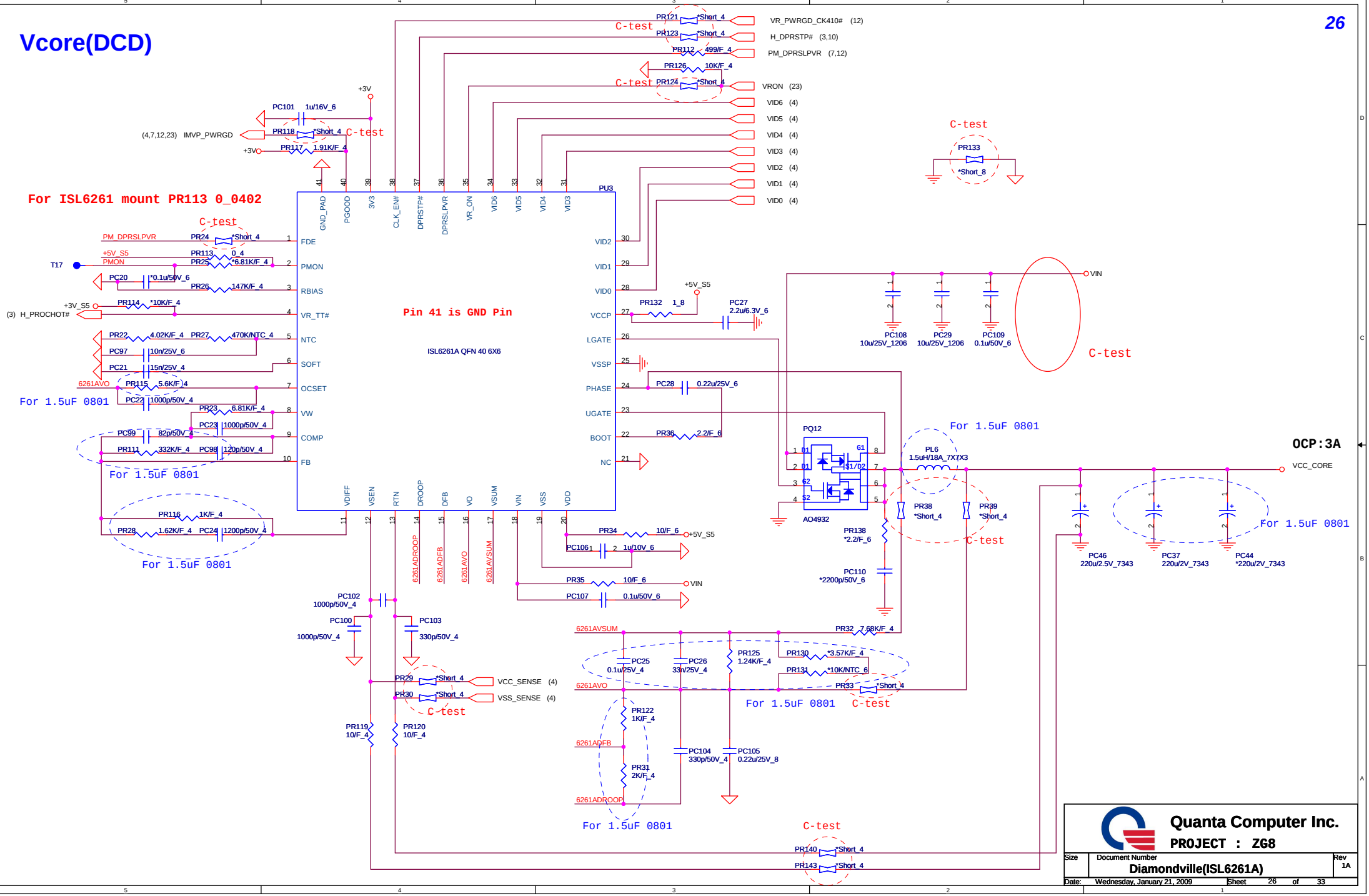
For ISL6261 mount PR113 0_0402
Pin 41 is GND Pin
ISL6261A QFN 40 6X6
PU3
OCP:3A
VCC_CORE
VIN
VR_PWRGD_CK410# (12)
H_DPRSTP# (3,10)
PM_DPRSLPVR (7,12)
VRON (23)
VID6 (4)
VID5 (4)
VID4 (4)
VID3 (4)
VID2 (4)
VID1 (4)
VID0 (4)
(4,7,12,23) IMVP_PWRGD
(3) H_PROCHOT#
VCC_SENSE (4)
VSS_SENSE (4)
PQ12
AO4932
PL6
1.5uH/18A_7X7X3
For 1.5uF 0801
C-test
Quanta Computer Inc.
PROJECT : ZG8
Size
Document Number
Diamondville(ISL6261A)
Rev
1A
Date: Wednesday, January 21, 2009
Sheet 26 of 33

DDR 1.8V(DCD)

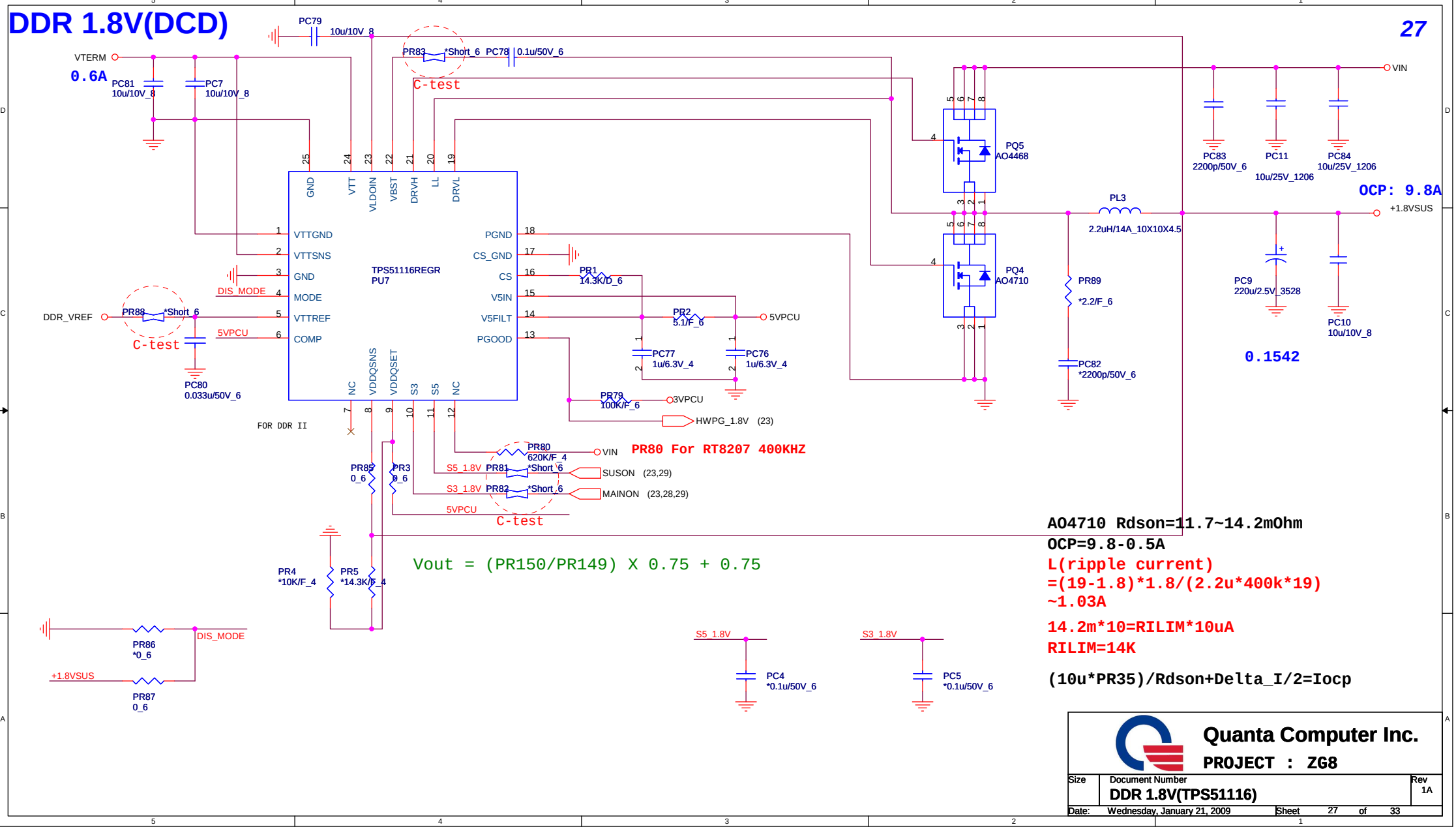

AO4710 Rdson=11.7~14.2mOhm
OCP=9.8-0.5A
L(ripple current)
=(19-1.8)*1.8/(2.2u*400k*19)
~1.03A

14.2m*10=RILIM*10uA
RILIM=14K

(10u*PR35)/Rdson+Delta_I/2=Iocp

Quanta Computer Inc.		
PROJECT : ZG8		
Size	Document Number: DDR 1.8V(TPS51116)	Rev 1A
Date: Wednesday, January 21, 2009	Sheet 27 of 33	

hexainf@hotmail.com

VCCP 1.05V(DCD)

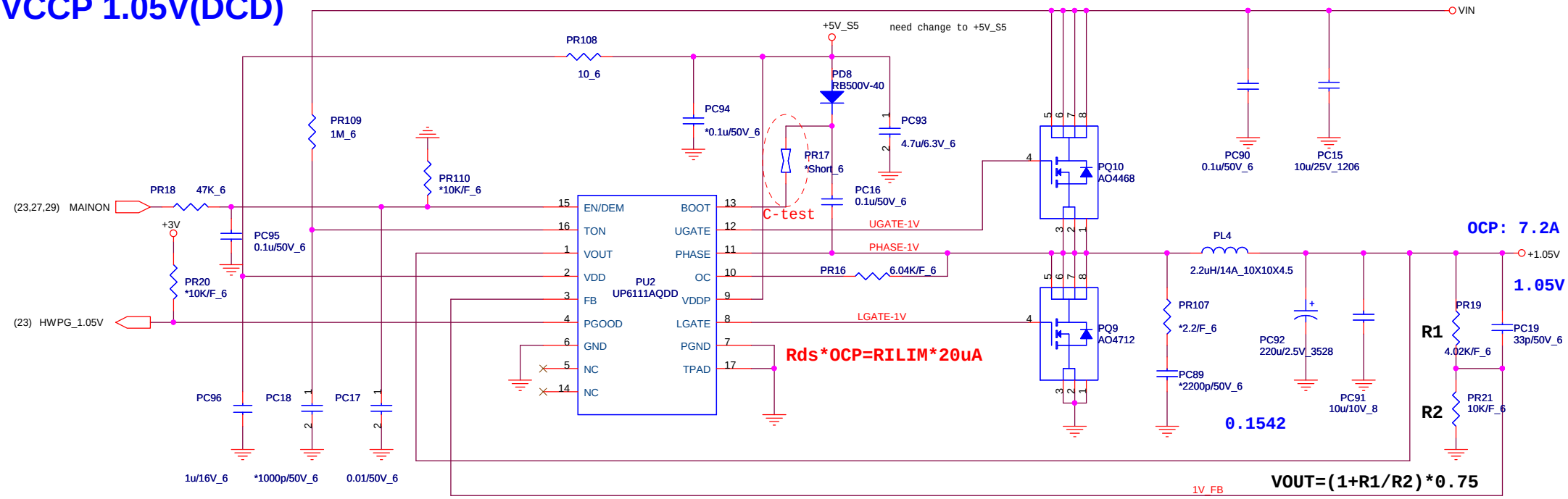

TON=3.85p*RTON*Vout/(Vin-0.5)

Frequency=Vout/(Vin*TON)

TON=3.85p*1M*1/(Vin-0.5)

Frequency=1/(0.0036767)=272K

AO4712 Rdson=15~18mOhm

OCP=7.2-0.8A

L(ripple current)
=(19-1.05)*1.05/(2.2u*272k*19)
~1.63A

18m*7=RILIM*20uA

RILIM=6K(2.5~8K)

Quanta Computer Inc.		
PROJECT : ZG8		
Size	Document Number: VCCP 1.05V(RT8202)	Rev 1A
Date: Wednesday, January 21, 2009	Sheet 28 of 33	

Discharger/1.5V(DCD)

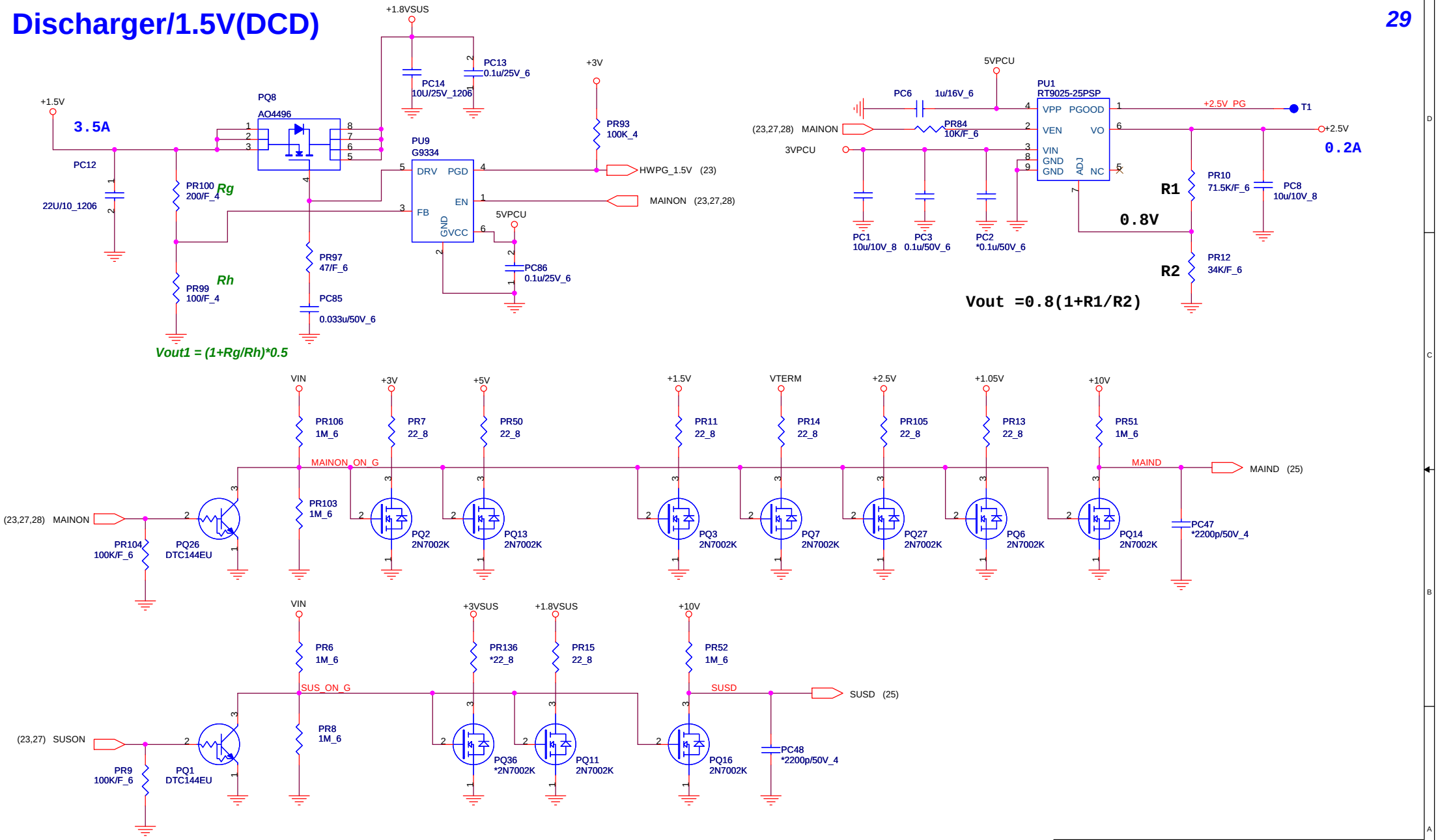

Quanta Computer Inc.		
PROJECT : ZG8		
Size	Document Number: Discharde (1.5V)	Rev 1A
Date: Thursday, February 12, 2009	Sheet 29 of 33	

hexainf@hotmail.com