BV1 (M-Note) SYSTEM BLOCK DIAGRAM

SVT-2
REV : 3C
2005-08-26

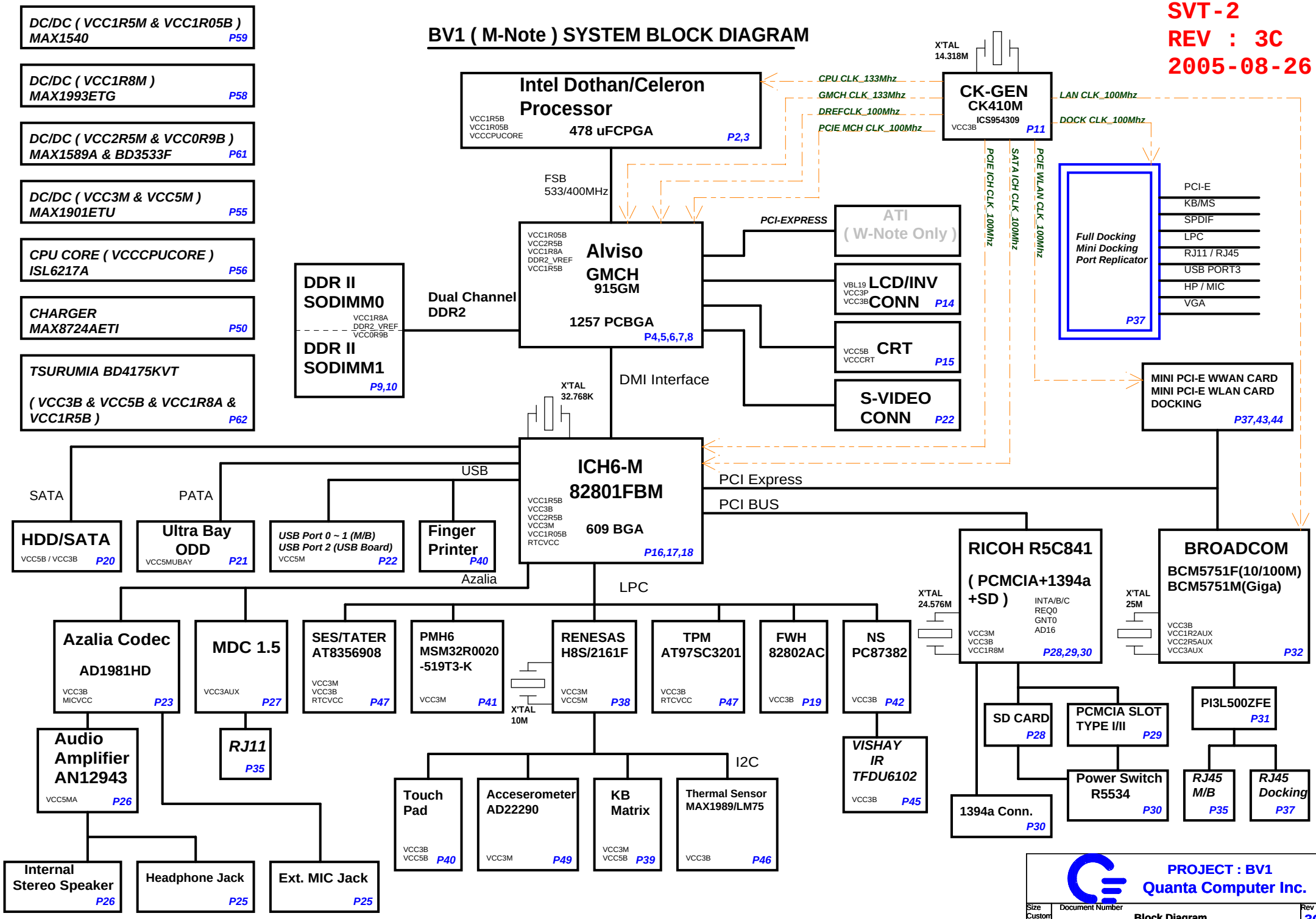

PROJECT : BV1
Quanta Computer Inc.

Size	Document Number	Rev
Custom	Block Diagram	3C

Date: Thursday, October 06, 2005 Sheet 1 of 73

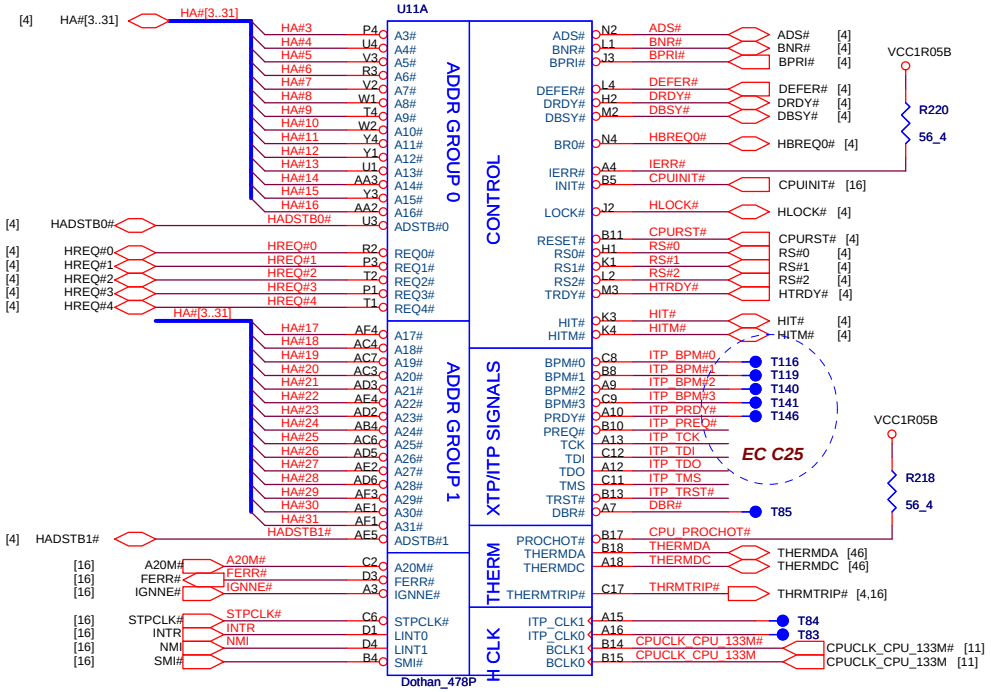

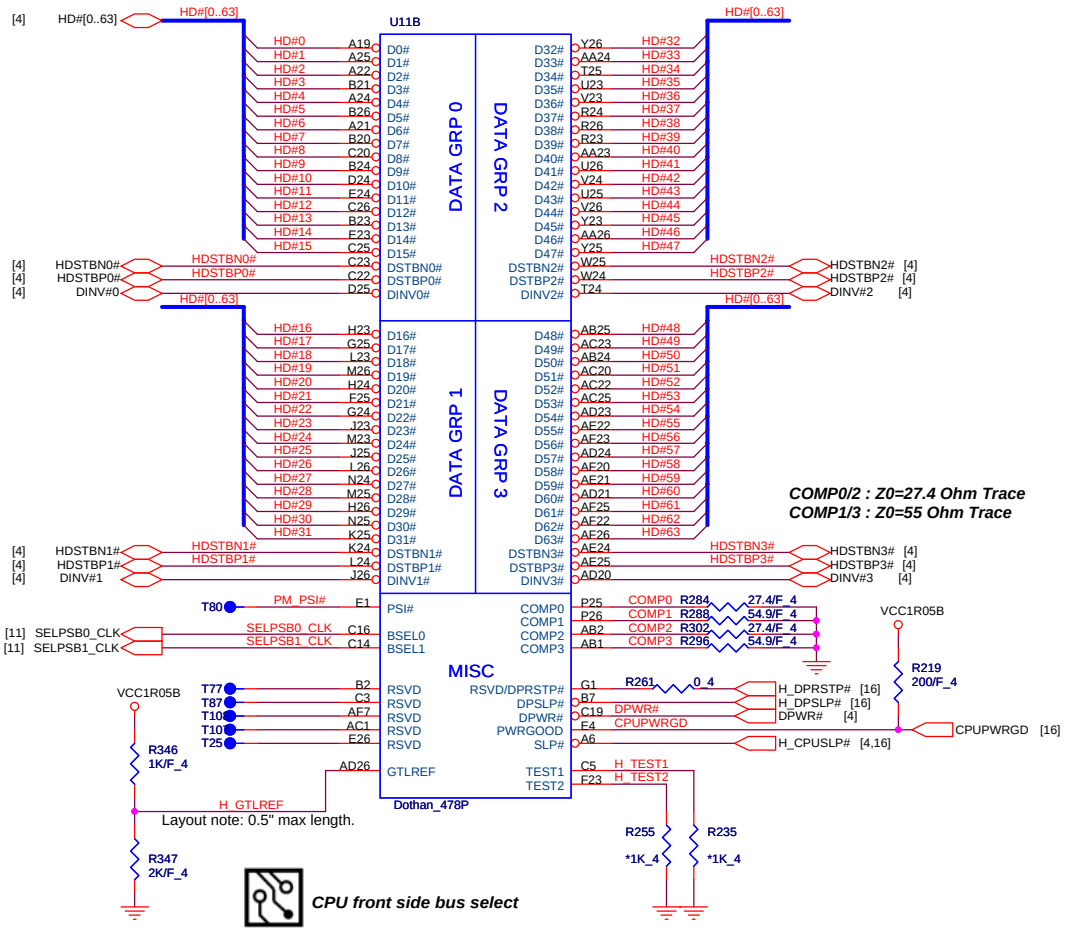

CPU front side bus select

	A Step		B Step	
FSB	533	400	533	400
BSEL1	0	0	0	0
BSEL0	1	0	0	1

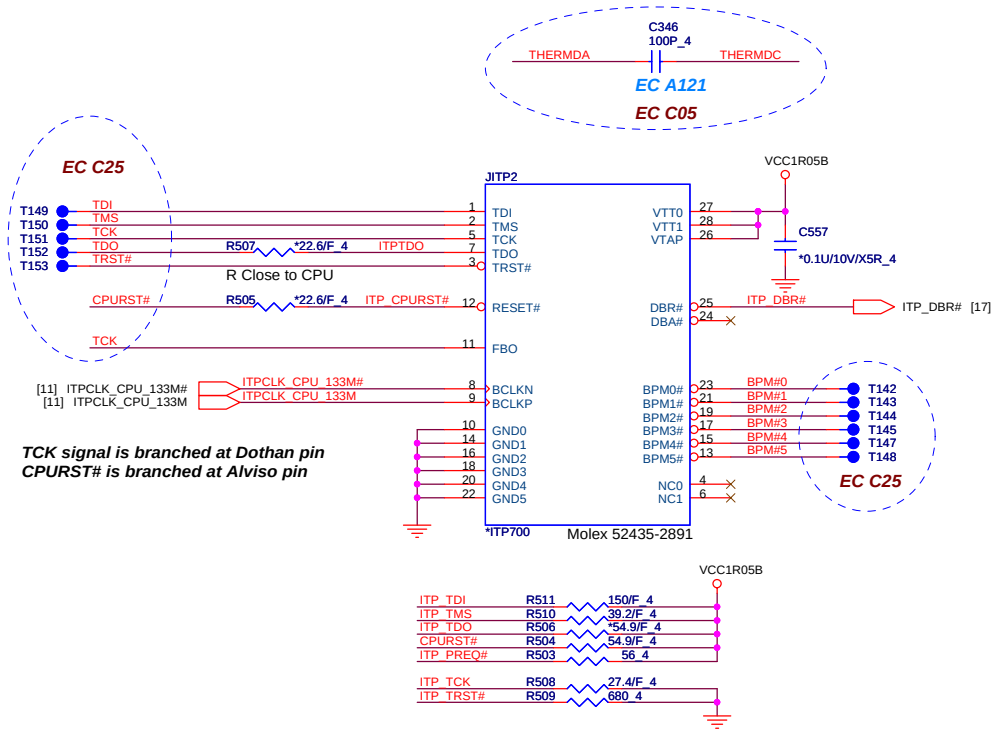

TCK signal is branched at Dothan pin
CPURST# is branched at Alviso pin

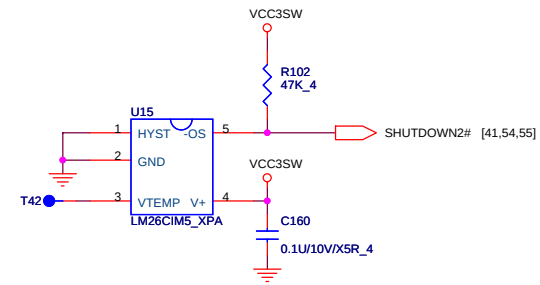

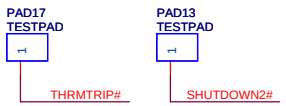

test pad for THERMTRIP# on bottom side

test pad for SHUTDOWN# on bottom side

PROJECT : BV1
Quanta Computer Inc.

Size	Document Number	Rev
Custom	Dothan CPU (Host Bus)	3C

Date: Thursday, October 06, 2005 Sheet 2 of 73

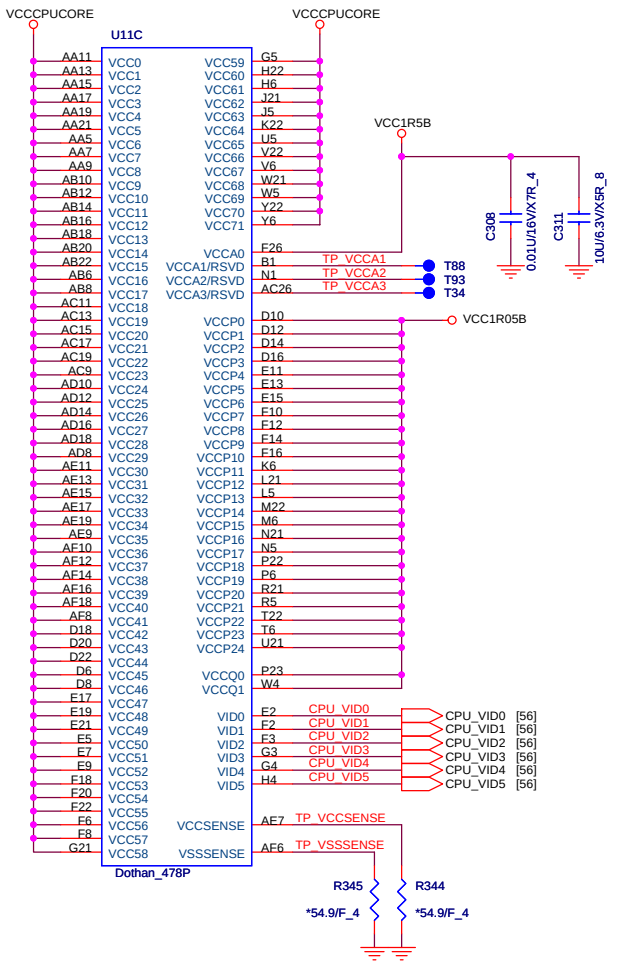

VCCP decoupling

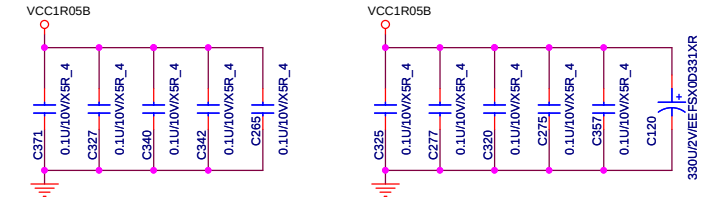

CPU_CORE decoupling

10uF X5R 2012 1/16W * 25pcs

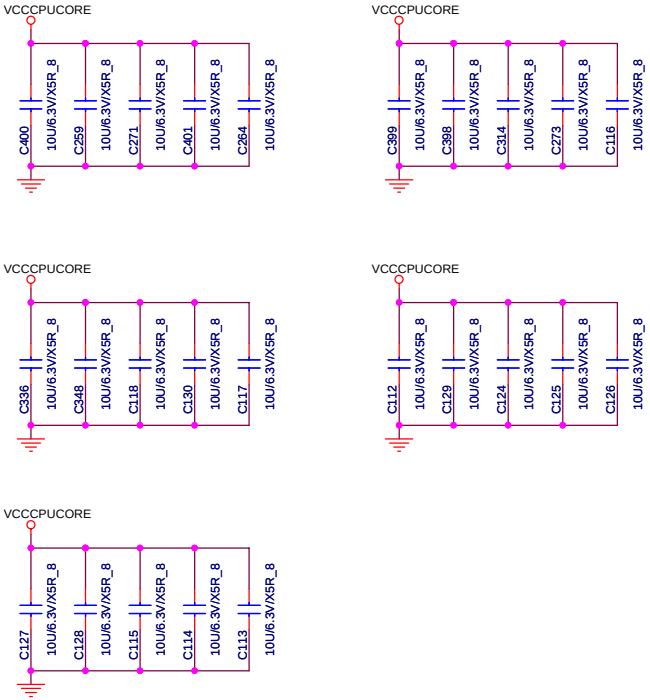

VCCCOREPAD

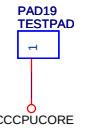

GNDPAD

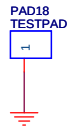

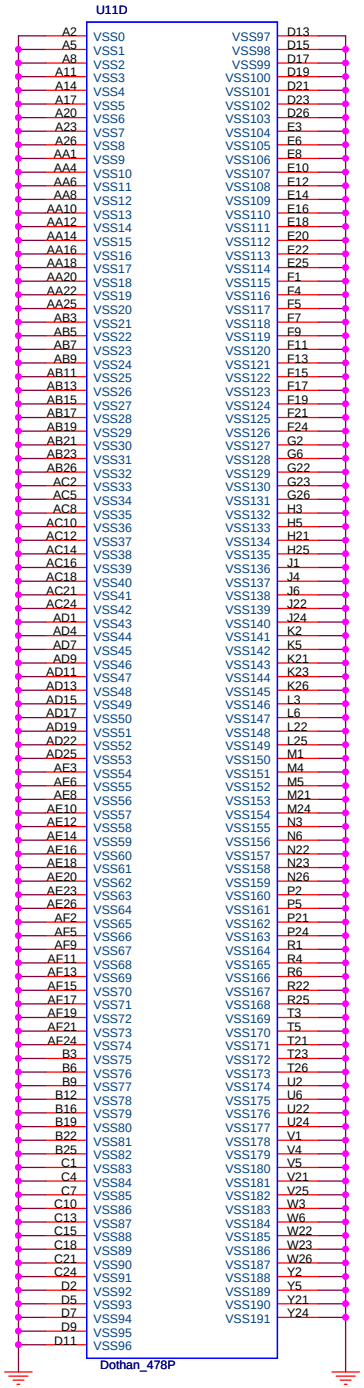

PROJECT : BV1

Quanta Computer Inc.

Size	Document Number	Rev
Custom	Dothan CPU (Power)	3C

Date: Thursday, October 06, 2005 Sheet 3 of 73

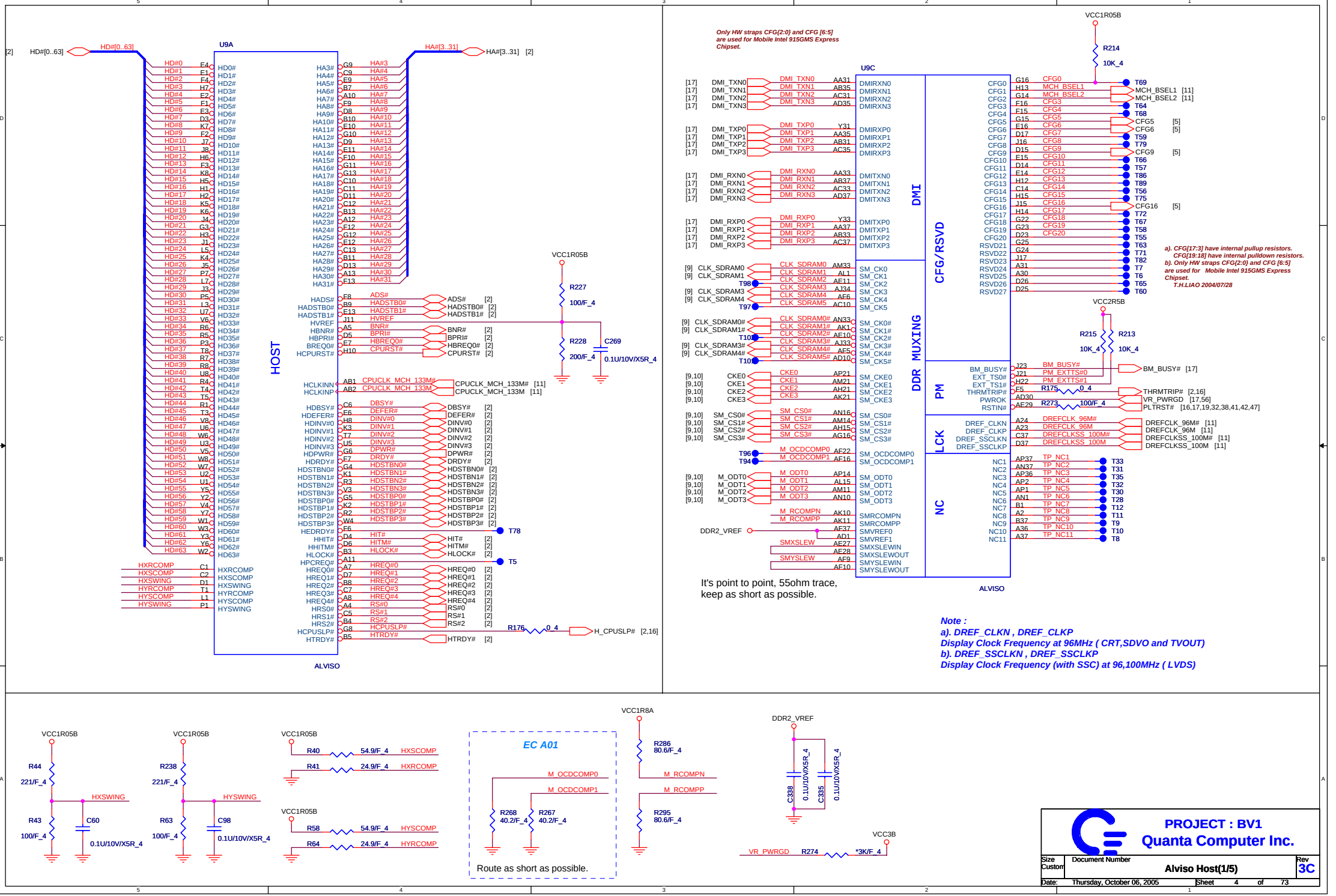
U9A
HOST
ALVISO
HD#[0..63]
HA#[3..31]
VCC1R05B
R227
100/F_4
R228
200/F_4
C269
0.1U/10V/X5R_4
HXRCOMP
HXSCOMP
HXSWING
HYRCOMP
HYSCOMP
HYSWING
T78
T5
R176
0_4
H_CPUSLP# [2,16]
Only HW straps CFG{2:0} and CFG [6:5] are used for Mobile Intel 915GMS Express Chipset.
U9C
DMI
DDR MUXING
CFG/RSVD
PM
LCK
NC
R214
10K_4
VCC2R5B
R215
R213
10K_4
10K_4
BM_BUSY# [17]
THRMTRIP# [2,16]
VR_PWRGD [17,56]
PLTRST# [16,17,19,32,38,41,42,47]
DREFCLK_96M# [11]
DREFCLK_96M [11]
DREFCLKSS_100M# [11]
DREFCLKSS_100M [11]
MCH_BSEL1 [11]
MCH_BSEL2 [11]
CFG5 [5]
CFG6 [5]
CFG9 [5]
CFG16 [5]
a). CFG[17:3] have internal pullup resistors.
CFG[19:18] have internal pulldown resistors.
b). Only HW straps CFG{2:0} and CFG [6:5] are used for Mobile Intel 915GMS Express Chipset.
T.H.LIAO 2004/07/28
DDR2_VREF
It's point to point, 55ohm trace, keep as short as possible.
Note :
a). DREF_CLKN , DREF_CLKP
Display Clock Frequency at 96MHz (CRT,SDVO and TVOUT)
b). DREF_SSCLKN , DREF_SSCLKP
Display Clock Frequency (with SSC) at 96,100MHz (LVDS)
R44
221/F_4
HXSWING
R43
100/F_4
C60
0.1U/10V/X5R_4
R238
221/F_4
HYSWING
R63
100/F_4
C98
0.1U/10V/X5R_4
R40
54.9/F_4
HXSCOMP
R41
24.9/F_4
HXRCOMP
R58
54.9/F_4
HYSCOMP
R64
24.9/F_4
HYRCOMP
EC A01
M_OCDCOMP0
M_OCDCOMP1
R268
40.2/F_4
R267
40.2/F_4
Route as short as possible.
VCC1R8A
R286
80.6/F_4
M_RCOMPN
M_RCOMPP
R295
80.6/F_4
DDR2_VREF
C338
0.1U/10V/X5R_4
C335
0.1U/10V/X5R_4
VCC3B
VR_PWRGD
R274
*3K/F_4
PROJECT : BV1
Quanta Computer Inc.
Size Custom
Document Number
Alviso Host(1/5)
Rev 3C
Date: Thursday, October 06, 2005
Sheet 4 of 73

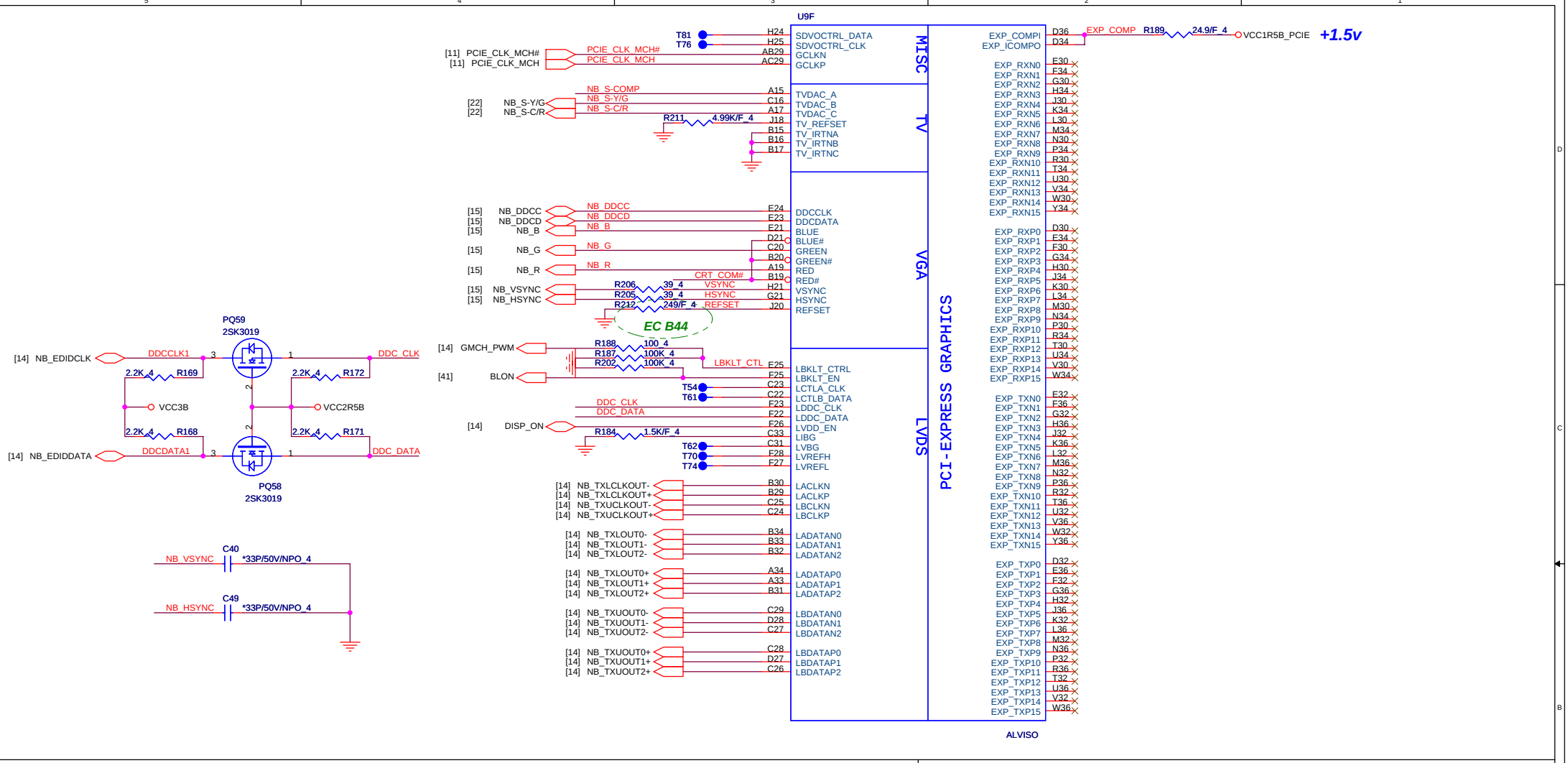

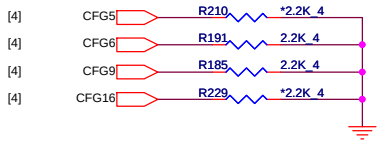

	Low	NO_ASM
CFG3	DDR533	
CFG5	DMIx2	***DMIx4***
CFG6	***DDR II***	DDR
CFG7	DT CPU	***Mobile CPU***
CFG9	***Reverse Lane***	Normal Operation
CFG11	FSB533	
CFG12 CFG13	00 : Reserved 01 : XOR Mode Enabled 10 : All Z Mode Enabled ***11 : Normal Operation***	
CFG16	FSB Dynamic ODT Disabled	***FSB Dynamic ODT Enabled***

CFG9 : PCI-E Graphics Lane
Note : If in integrated GFX mode,need to use lane-reversal ADD2 add-in card since SDVO i/f does not support lane reversal.

	NO_ASM	High
CFG3	***CPUCORE=1.05V***	CPUCORE=1.5V
CFG5	***VTT=1.05V***	VTT=1.2V

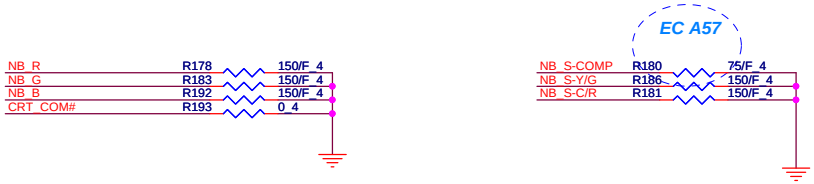

PROJECT : BV1
Quanta Computer Inc.

Size	Document Number	Rev
Custom	Alviso VGA/DMI (2/5)	3C

Date: Thursday, October 06, 2005 Sheet 5 of 73

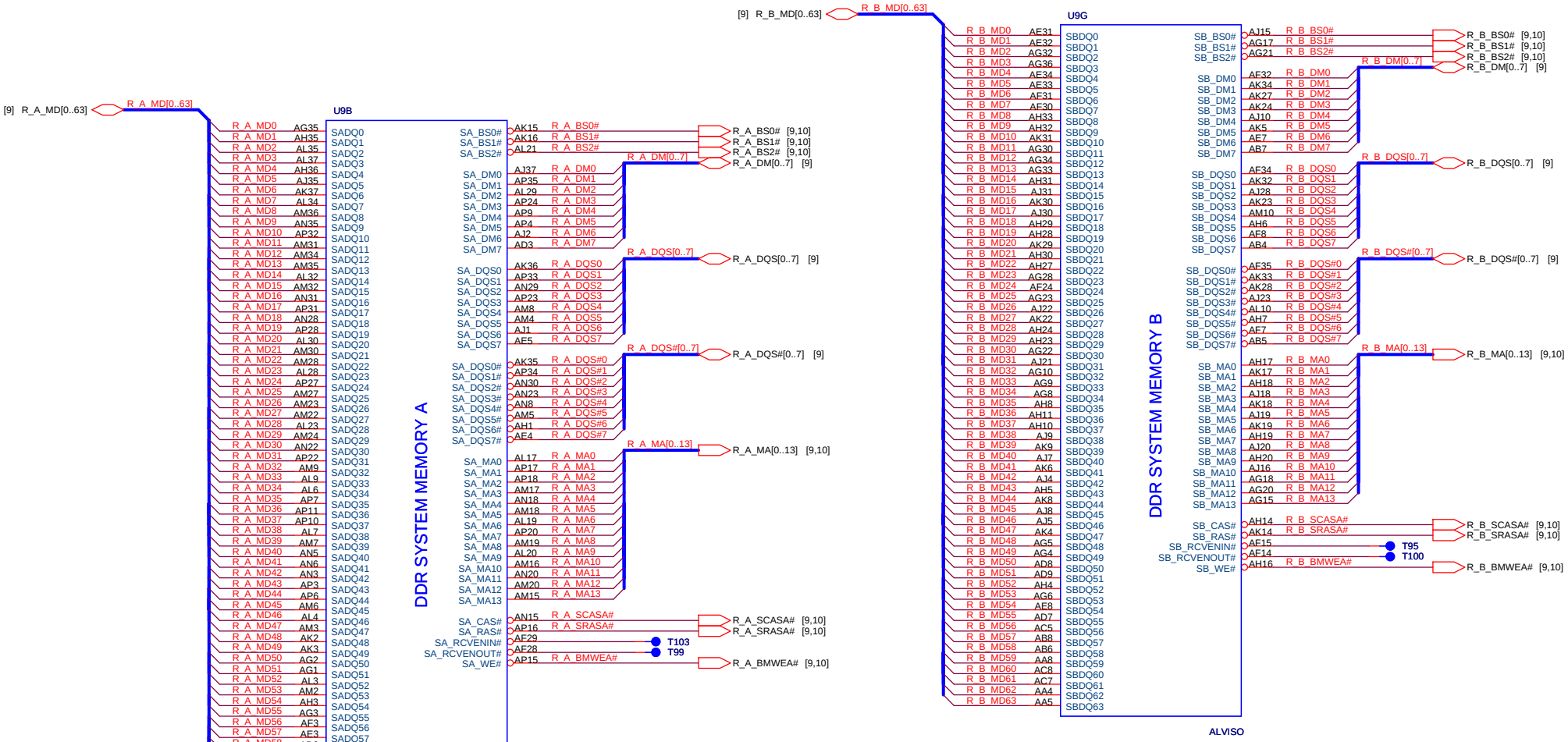

PROJECT : BV1

Quanta Computer Inc.

Size	Document Number	Rev
Custom	Alviso DDR(3/5)	3C

Date: Thursday, October 06, 2005 Sheet 6 of 73

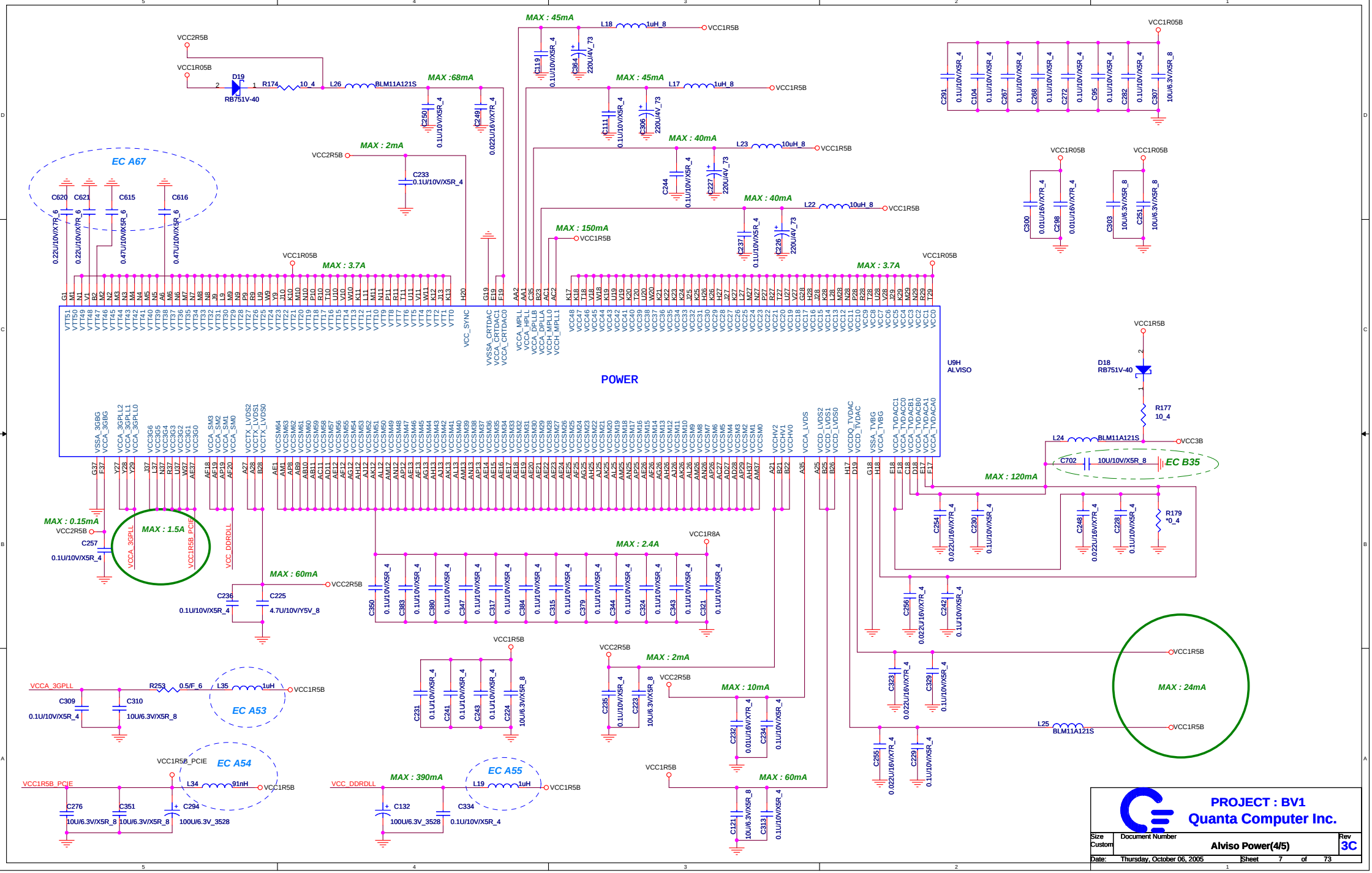
POWER
U9H
ALVISO
EC A67
EC A53
EC A54
EC A55
EC B35
MAX : 45mA
MAX : 68mA
MAX : 2mA
MAX : 40mA
MAX : 150mA
MAX : 3.7A
MAX : 0.15mA
MAX : 1.5A
MAX : 60mA
MAX : 2.4A
MAX : 10mA
MAX : 390mA
MAX : 120mA
MAX : 24mA
VCC1R5B
VCC2R5B
VCC1R05B
VCC1R8A
VCC3B
VCC1R5B_PCIE
VCC_DDRDLL
VCCA_3GPLL
VCCA_3GPLL_PCIE
PROJECT : BV1
Quanta Computer Inc.
Size Custom
Document Number
Alviso Power(4/5)
Rev 3C
Date: Thursday, October 06, 2005
Sheet 7 of 73

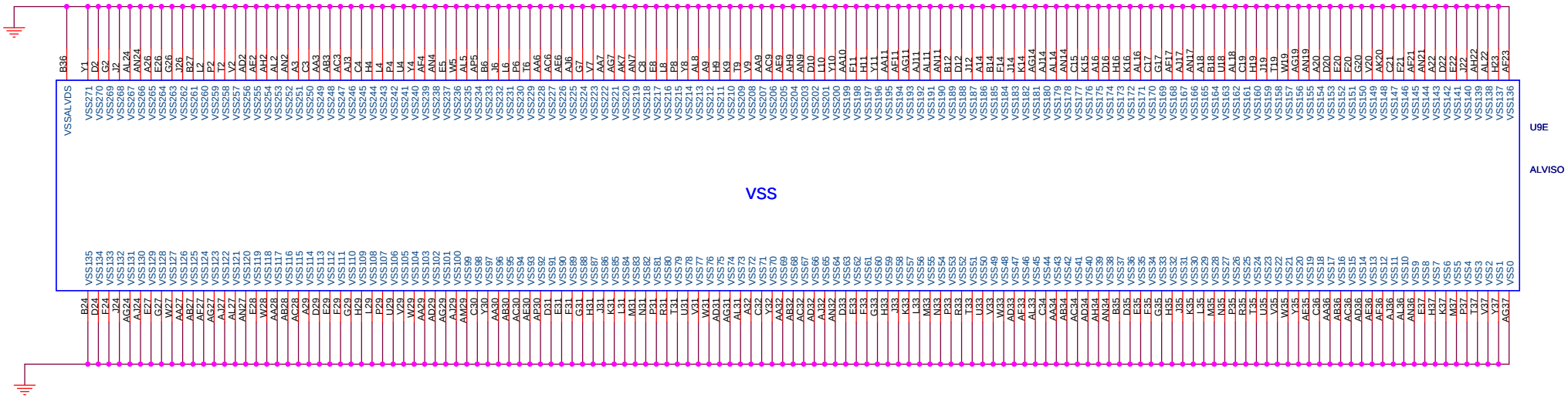

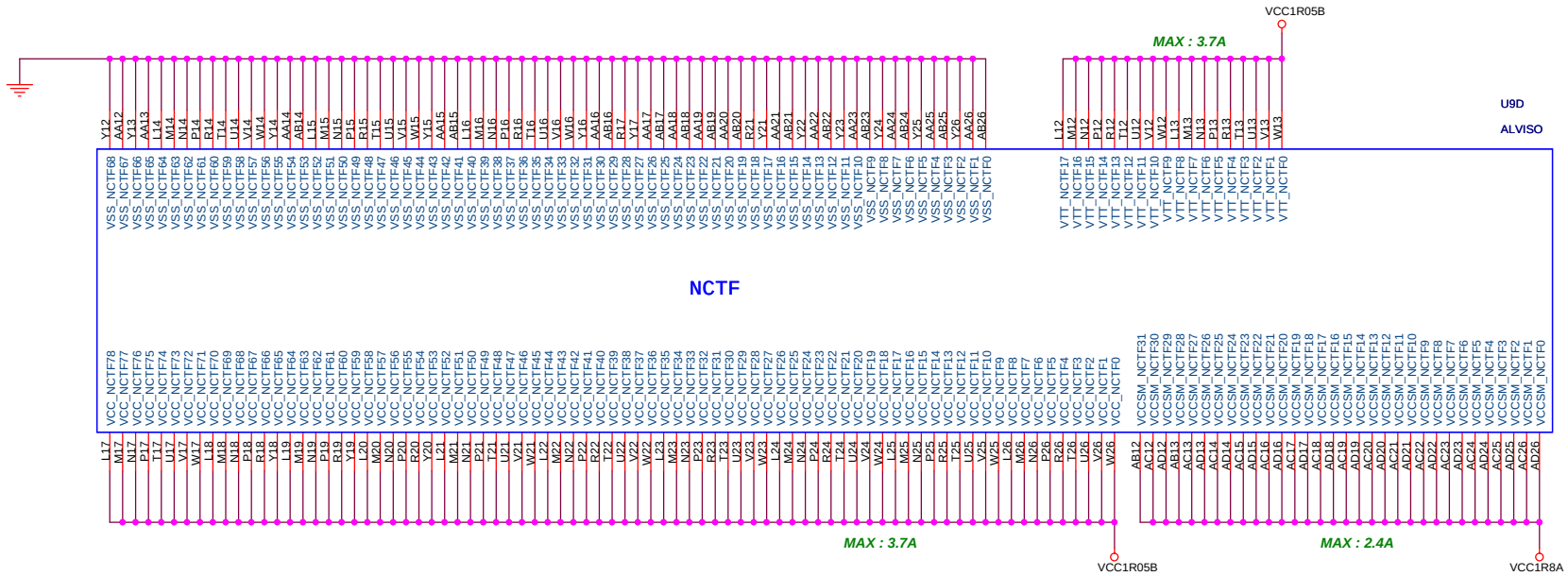

PROJECT : BV1

Quanta Computer Inc.

Size	Document Number	Rev
Custom	VSS/NCTF(5/5)	3C

Date: Thursday, October 06, 2005 Sheet 8 of 73

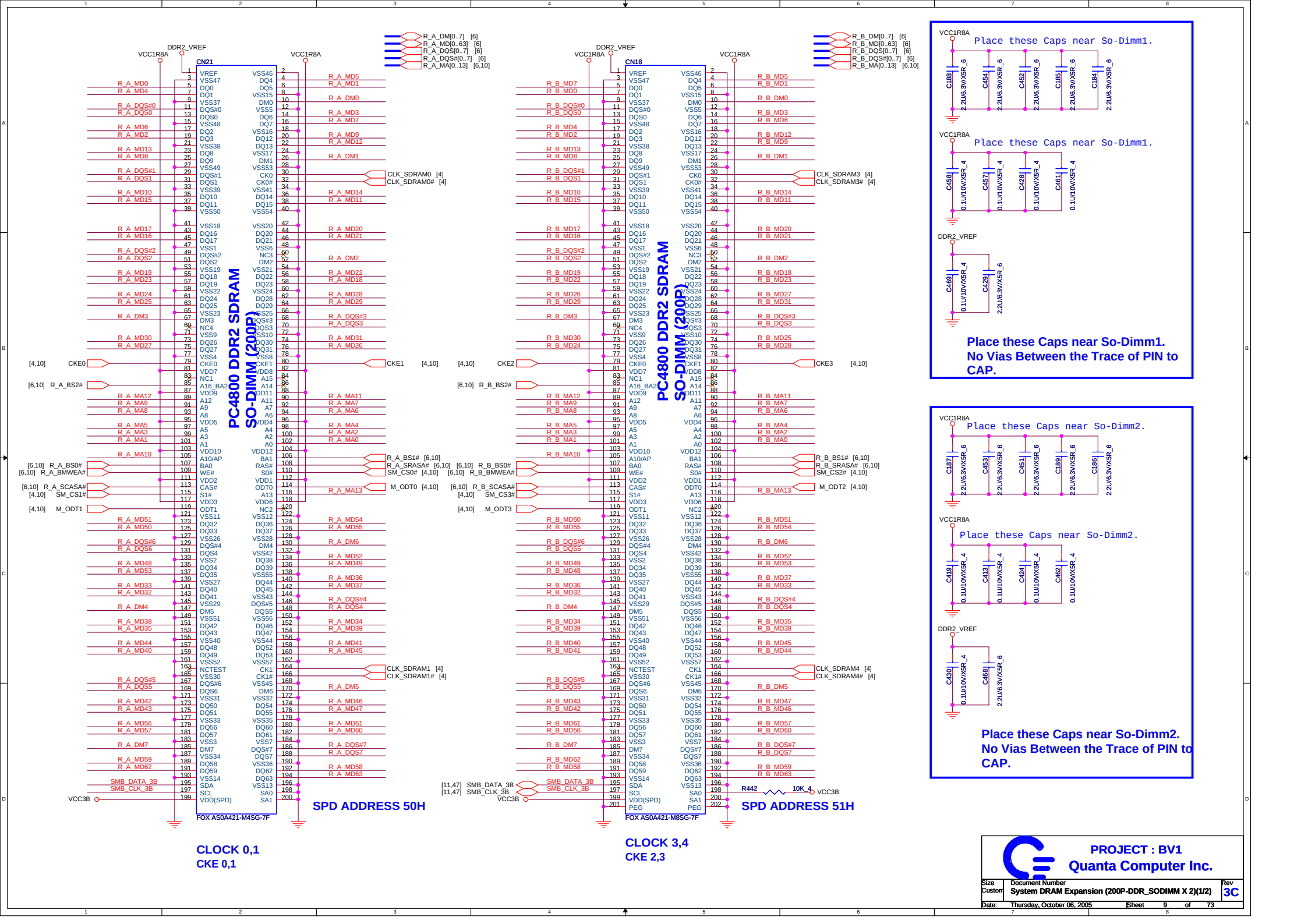
PC4800 DDR2 SDRAM SO-DIMM (200P)
CN21
FOX AS0A421-M4SG-7F
SPD ADDRESS 50H
CLOCK 0,1
CKE 0,1
PC4800 DDR2 SDRAM SO-DIMM (200P)
CN18
FOX AS0A421-M8SG-7F
SPD ADDRESS 51H
CLOCK 3,4
CKE 2,3
R_A_DM[0..7] [6]
R_A_MD[0..63] [6]
R_A_DQS[0..7] [6]
R_A_DQS#[0..7] [6]
R_A_MA[0..13] [6,10]
R_B_DM[0..7] [6]
R_B_MD[0..63] [6]
R_B_DQS[0..7] [6]
R_B_DQS#[0..7] [6]
R_B_MA[0..13] [6,10]
DDR2_VREF
VCC1R8A
VCC3B
R442 10K_4
Place these Caps near So-Dimm1.
Place these Caps near So-Dimm1.
No Vias Between the Trace of PIN to CAP.
Place these Caps near So-Dimm2.
Place these Caps near So-Dimm2.
No Vias Between the Trace of PIN to CAP.
PROJECT : BV1
Quanta Computer Inc.
Size Custom
Document Number
System DRAM Expansion (200P-DDR_SODIMM X 2)(1/2)
Rev 3C
Date: Thursday, October 06, 2005
Sheet 9 of 73

DDRII DUAL CHANNEL A,B.

DDRII A CHANNEL

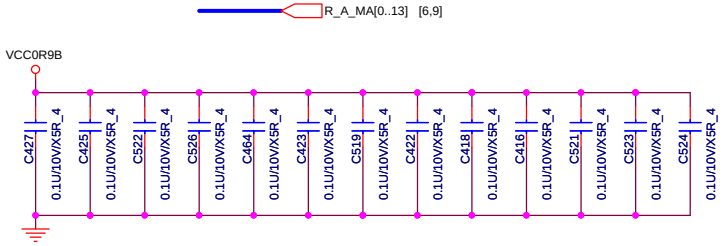

DDRII B CHANNEL

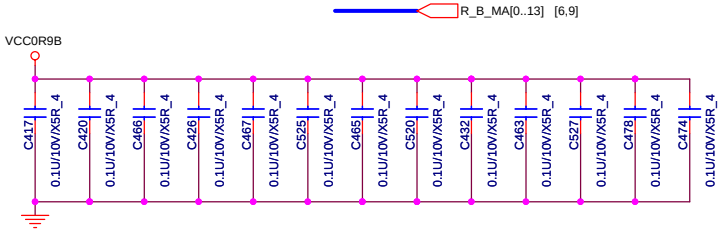

Layout note: Place one cap close to every 2 pullup resistors terminated to SMDDR_VTERM

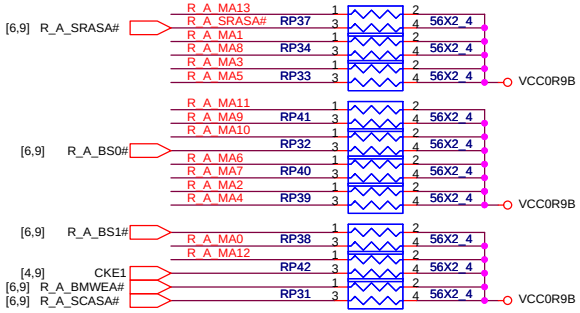

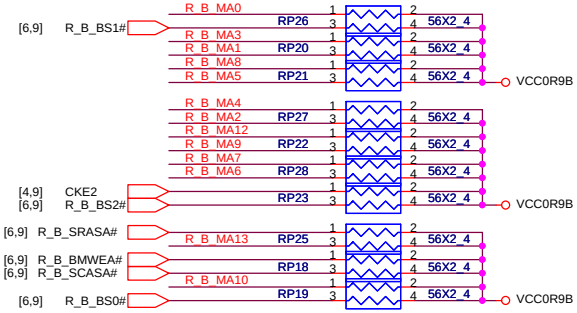

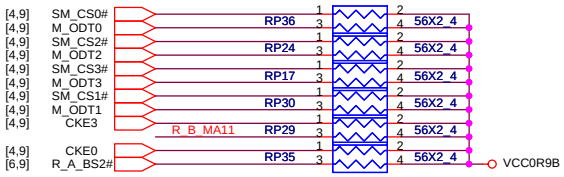

PROJECT : BV1

Quanta Computer Inc.

Size	Document Number	Rev
Custom	DDR RES.ARRAY(2/2)	3C

Date: Thursday, October 06, 2005 Sheet 10 of 73

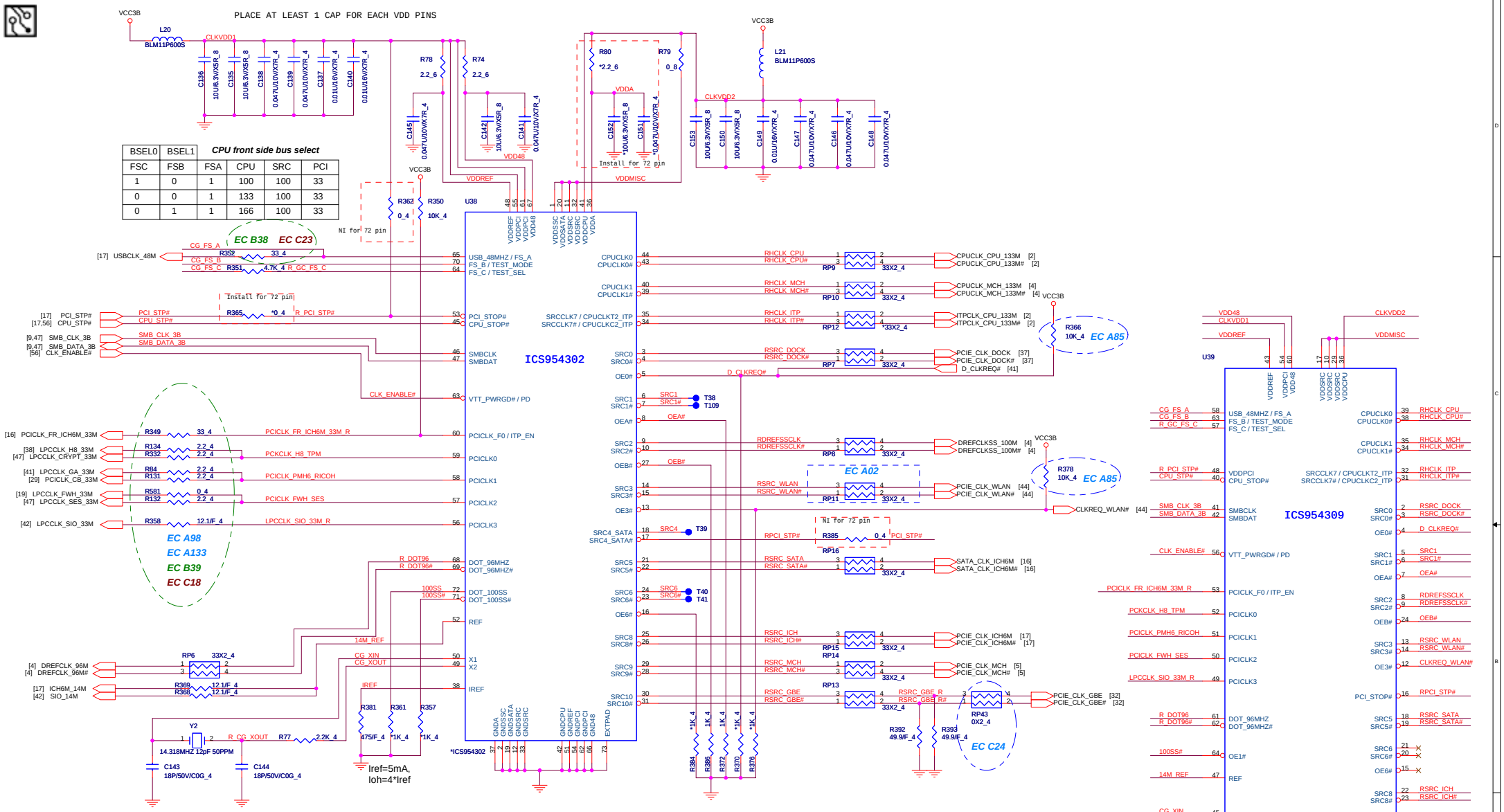

CPU front side bus select

BSEL0	BSEL1				
FSC	FSB	FSA	CPU	SRC	PCI
1	0	1	100	100	33
0	0	1	133	100	33
0	1	1	166	100	33

Clock Generator

	72 pin	64 pin
U38	954302	NO_ASM
U39	NO_ASM	954309
C152	10uF	NO_ASM
C151	0.047uF	NO_ASM
R80	2.2 ohm	NO_ASM
R362	NO_ASM	0 ohm
R365	0 ohm	NO_ASM
R385	NO_ASM	0 ohm
R361	NO_ASM	NO_ASM

<BLANK PAGE>

PROJECT : BV1

Quanta Computer Inc.

Size	Document Number	Rev
Custom	<BLANK PAGE>	3C

Date: Thursday, October 06, 2005 Sheet 12 of 73

<BLANK PAGE>

PROJECT : BV1
Quanta Computer Inc.

Size	Document Number	Rev
Custom	<BLANK PAGE>	3C

Date: Thursday, October 06, 2005 Sheet 13 of 73

LCD CONNECTOR

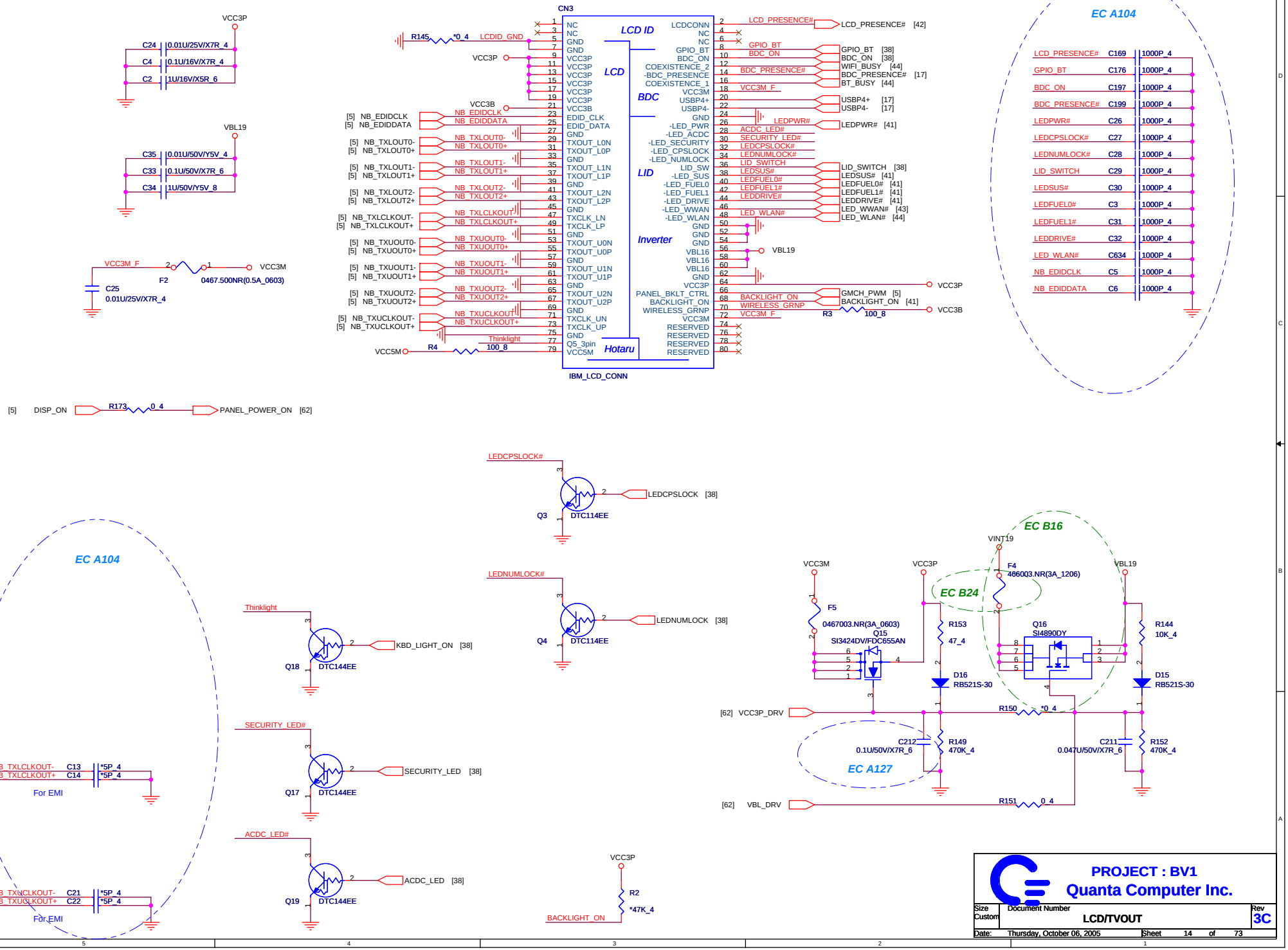

PROJECT : BV1

Quanta Computer Inc.

Size	Document Number	Rev
Custom	LCD/TVOUT	3C

Date: Thursday, October 06, 2005 Sheet 14 of 73

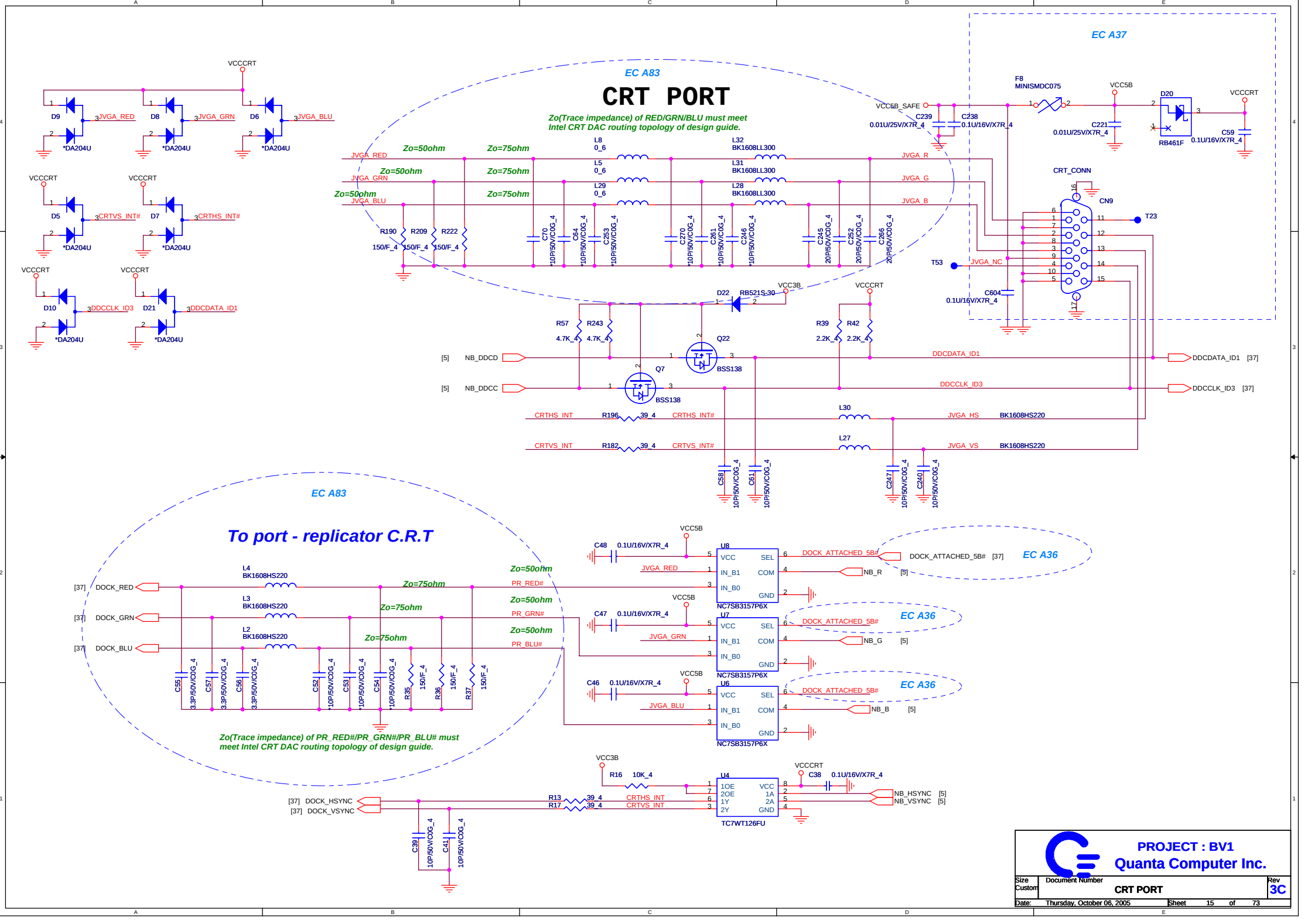
EC A83
CRT PORT
Zo(Trace impedance) of RED/GRN/BLU must meet Intel CRT DAC routing topology of design guide.
EC A37
VCCCRT
D9 D8 D6
JVGA_RED JVGA_GRN JVGA_BLU
*DA204U
D5 D7
CRTVS_INT# CRTHS_INT#
D10 D21
DDCCLK_ID3 DDCDATA_ID1
Zo=50ohm
Zo=75ohm
JVGA_R JVGA_G JVGA_B
L8 0_6
L5 0_6
L29 0_6
L32 BK1608LL300
L31 BK1608LL300
L28 BK1608LL300
R190 150/F_4
R209 150/F_4
R222 150/F_4
C70 10P/50V/C0G_4
C64 10P/50V/C0G_4
C253 10P/50V/C0G_4
C270 10P/50V/C0G_4
C261 10P/50V/C0G_4
C246 10P/50V/C0G_4
C245 20P/50V/C0G_4
C252 20P/50V/C0G_4
C266 20P/50V/C0G_4
VCC5B_SAFE
C239 0.01U/25V/X7R_4
C238 0.1U/16V/X7R_4
F8 MINISMDC075
VCC5B
C221 0.01U/25V/X7R_4
D20 RB461F
C59 0.1U/16V/X7R_4
CRT_CONN
CN9
T23
T53
JVGA_NC
C604 0.1U/16V/X7R_4
D22 RB521S-30
VCC3B
R57 4.7K_4
R243 4.7K_4
R39 2.2K_4
R42 2.2K_4
Q22 BSS138
Q7 BSS138
[5] NB_DDCD
[5] NB_DDCC
DDCDATA_ID1 [37]
DDCCLK_ID3 [37]
CRTHS_INT R196 39_4 CRTHS_INT#
CRTVS_INT R182 39_4 CRTVS_INT#
L30 BK1608HS220
L27 BK1608HS220
JVGA_HS
JVGA_VS
C58 10P/50V/C0G_4
C61 10P/50V/C0G_4
C247 10P/50V/C0G_4
C240 10P/50V/C0G_4
EC A83
To port - replicator C.R.T
[37] DOCK_RED
[37] DOCK_GRN
[37] DOCK_BLU
L4 BK1608HS220
L3 BK1608HS220
L2 BK1608HS220
PR_RED#
PR_GRN#
PR_BLU#
C55 3.3P/50V/C0G_4
C57 3.3P/50V/C0G_4
C56 3.3P/50V/C0G_4
C52 10P/50V/C0G_4
C53 10P/50V/C0G_4
C54 10P/50V/C0G_4
R35 150/F_4
R36 150/F_4
R37 150/F_4
Zo(Trace impedance) of PR_RED#/PR_GRN#/PR_BLU# must meet Intel CRT DAC routing topology of design guide.
C48 0.1U/16V/X7R_4
C47 0.1U/16V/X7R_4
C46 0.1U/16V/X7R_4
U8 U7 U6
VCC SEL IN_B1 COM IN_B0 GND
NC7SB3157P6X
DOCK_ATTACHED_5B#
DOCK_ATTACHED_5B# [37]
EC A36
NB_R [5]
NB_G [5]
NB_B [5]
R16 10K_4
U4 TC7WT126FU
1OE 2OE 1Y 2Y VCC 1A 2A GND
C38 0.1U/16V/X7R_4
[37] DOCK_HSYNC
[37] DOCK_VSYNC
R13 39_4
R17 39_4
NB_HSYNC [5]
NB_VSYNC [5]
C39 10P/50V/C0G_4
C41 10P/50V/C0G_4
PROJECT : BV1
Quanta Computer Inc.
Size Custom
Document Number
CRT PORT
Rev 3C
Date: Thursday, October 06, 2005
Sheet 15 of 73

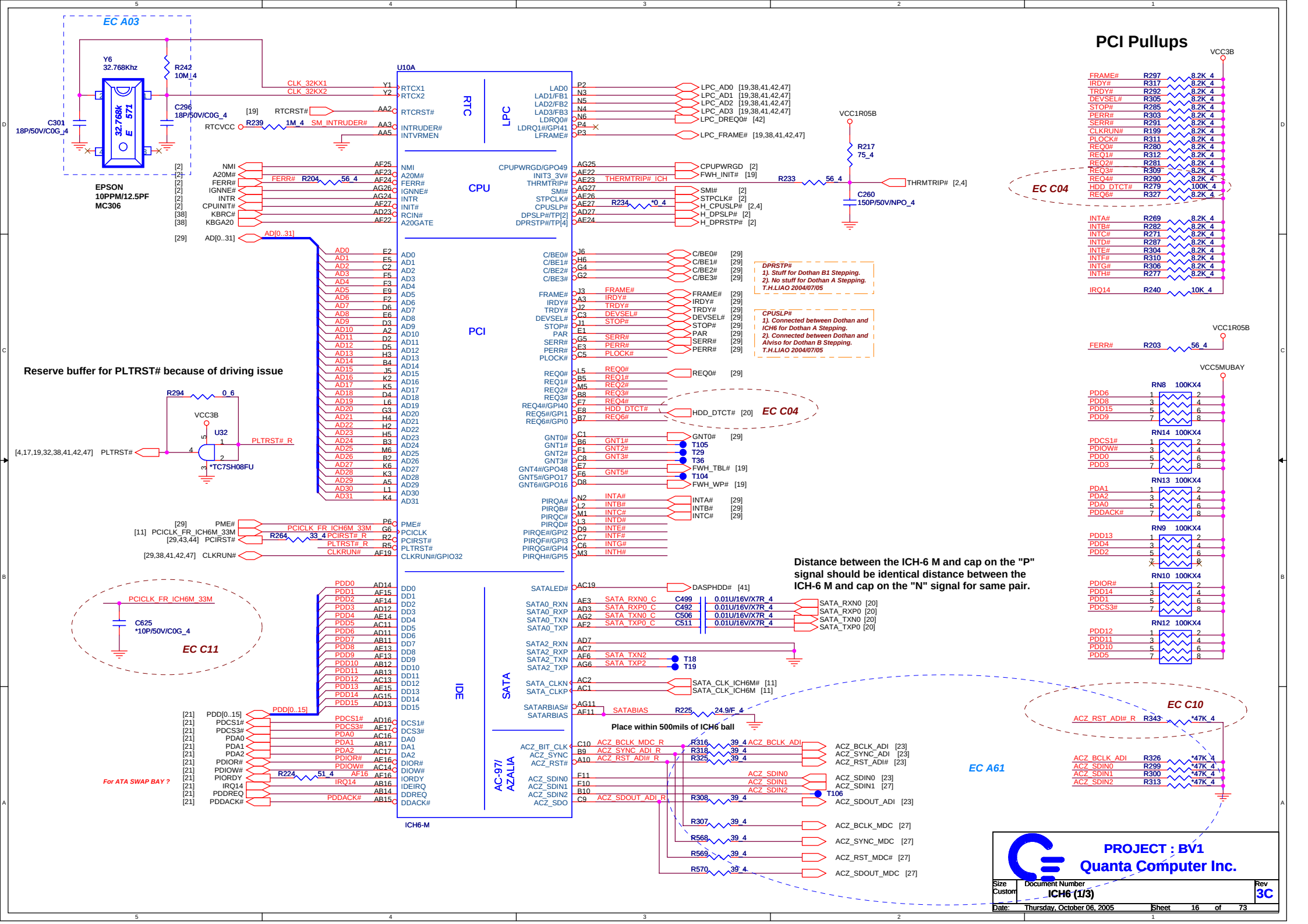
EC A03
Y6
32.768Khz
R242
10M_4
C301
18P/50V/C0G_4
C296
18P/50V/C0G_4
EPSON
10PPM/12.5PF
MC306
U10A
RTC
LPC
CPU
PCI
IDE
SATA
AC-97/
AZALIA
ICH6-M
PCI Pullups
VCC3B
VCC1R05B
VCC5MUBAY
EC C04
EC C11
EC C10
EC A61
Reserve buffer for PLTRST# because of driving issue
U32
*TC7SH08FU
PLTRST#_R
C625
*10P/50V/C0G_4
For ATA SWAP BAY ?
Distance between the ICH-6 M and cap on the "P" signal should be identical distance between the ICH-6 M and cap on the "N" signal for same pair.
Place within 500mils of ICH6 ball
DPRSTP#
1). Stuff for Dothan B1 Stepping.
2). No stuff for Dothan A Stepping.
T.H.LIAO 2004/07/05
CPUSLP#
1). Connected between Dothan and ICH6 for Dothan A Stepping.
2). Connected between Dothan and Alviso for Dothan B Stepping.
T.H.LIAO 2004/07/05
PROJECT : BV1
Quanta Computer Inc.
Size Custom
Document Number
ICH6 (1/3)
Rev 3C
Date: Thursday, October 06, 2005
Sheet 16 of 73

USB distribution

USB0	USB Port 1
USB1	USB Port 2
USB2	USB Port 3
USB3	Docking
USB4	Bluetooth
USB5	Finger print
USB6	N/A
USB7	MINI PCI-E Card

PCIE distribution

PCIE0	Enthernet Controller
PCIE1	N/A
PCIE2	Docking
PCIE3	MINI PCI-E Card

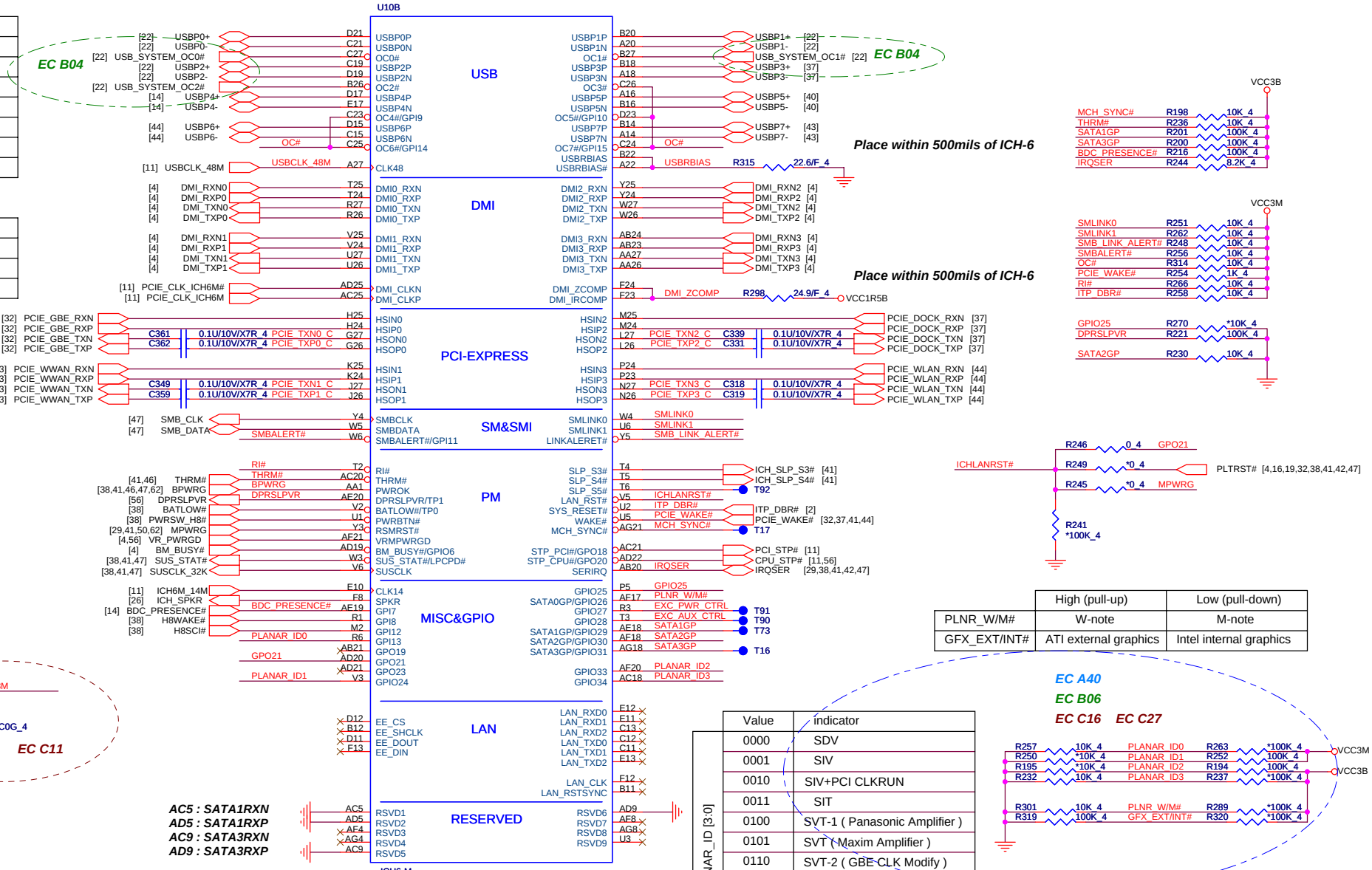

	High (pull-up)	Low (pull-down)
PLNR_W/M#	W-note	M-note
GFX_EXT/INT#	ATI external graphics	Intel internal graphics

PLANAR_ID [3:0] Value	indicator
0000	SDV
0001	SIV
0010	SIV+PCI CLKRUN
0011	SIT
0100	SVT-1 (Panasonic Amplifier)
0101	SVT (Maxim Amplifier)
0110	SVT-2 (GBE CLK Modify)
0111	
1000	
1001	
1010	
1011	
1100	
1101	
1110	
1111	

PROJECT : BV1
Quanta Computer Inc.

Size	Document Number	Rev
Custom	ICH6 (2/3)	3C

Date: Thursday, October 06, 2005 Sheet 17 of 73

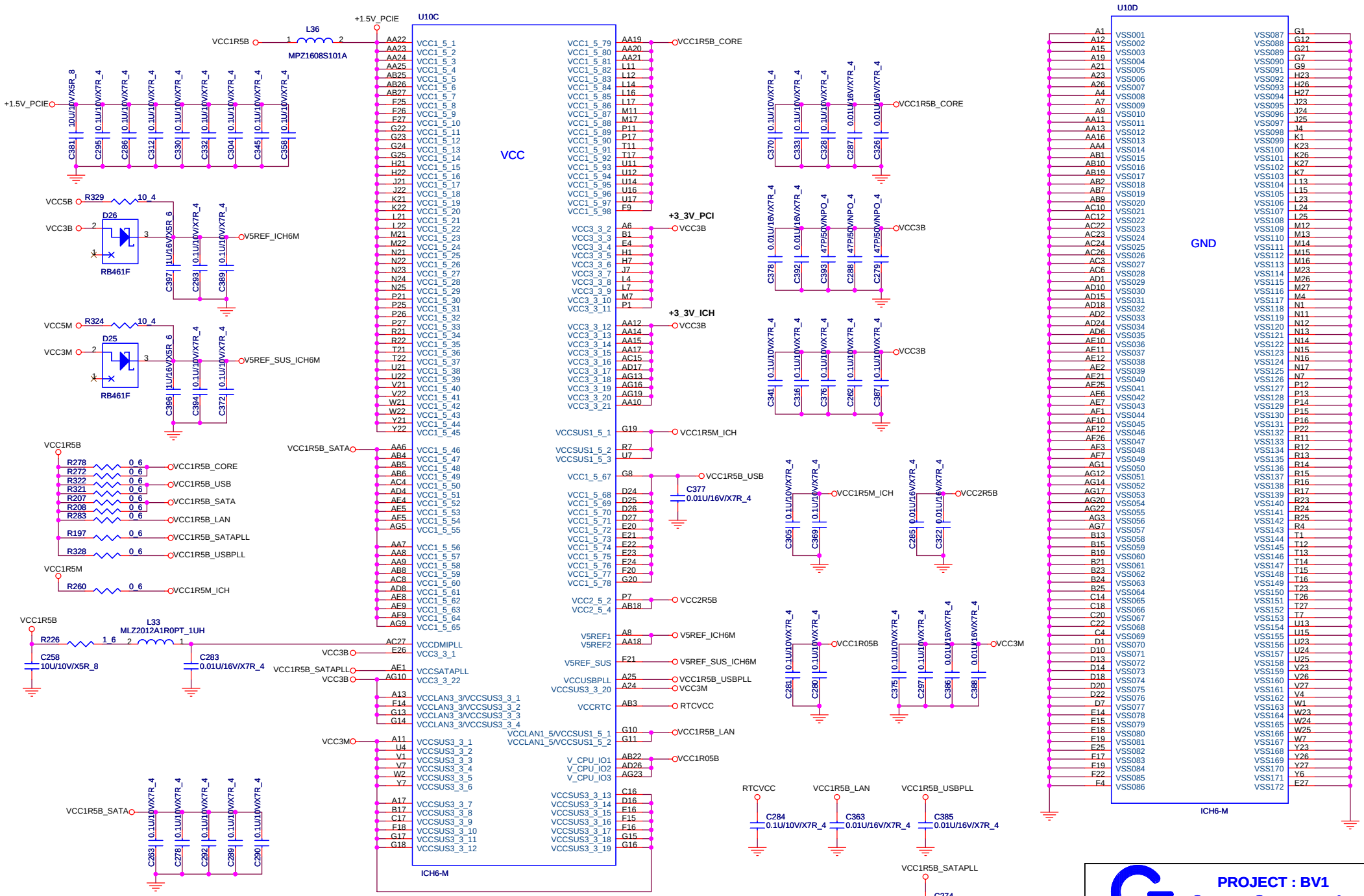

PROJECT : BV1

Quanta Computer Inc.

Size	Document Number	Rev
Custom	ICH6 (3/3)	3C

Date: Thursday, October 06, 2005 Sheet 18 of 73

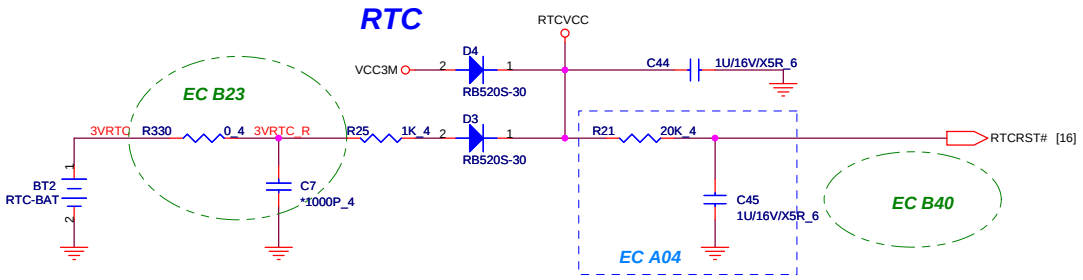

11/24 Change BT1 to be Tyco "1470366-2" and use cable-type coin battery

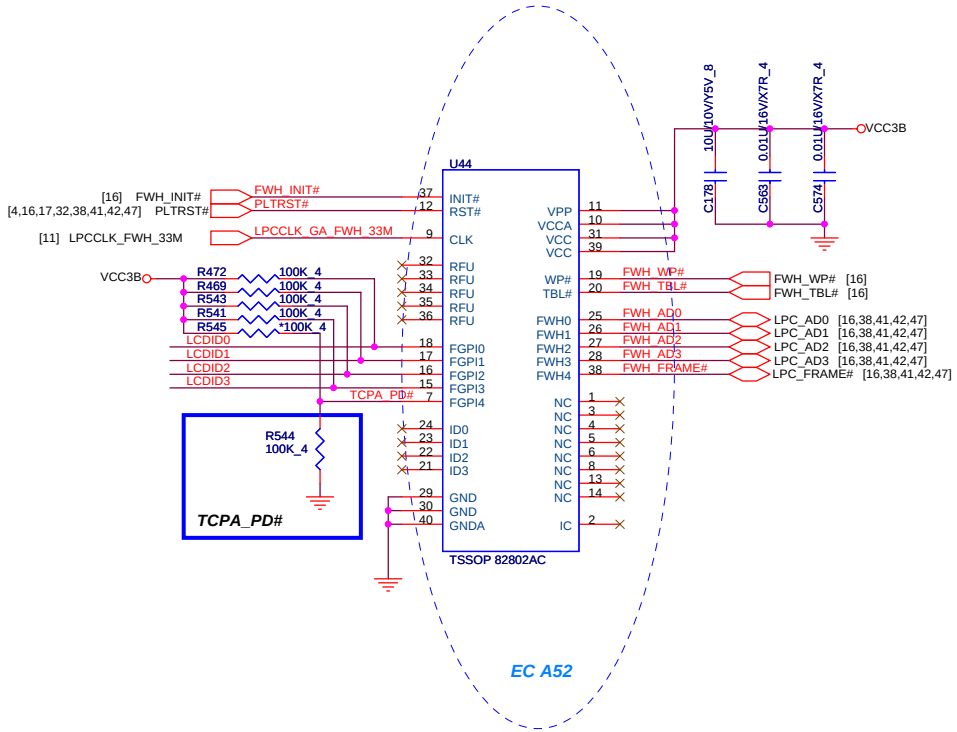

PROJECT : BV1			
Quanta Computer Inc.			
Size Custom	Document Number	FWH, RTC BATTERY	Rev 3C
Date: Thursday, October 06, 2005		Sheet 19 of 73	

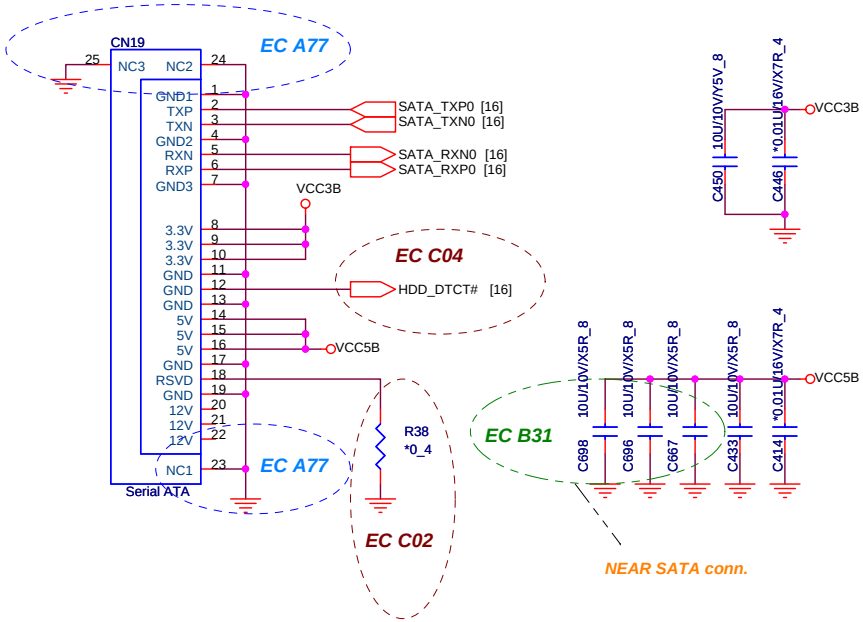

PROJECT : BV1

Quanta Computer Inc.

Size	Document Number	Rev
Custom	SATA HDD CONN	3C

Date: Thursday, October 06, 2005 Sheet 20 of 73

ODD CONNECTOR

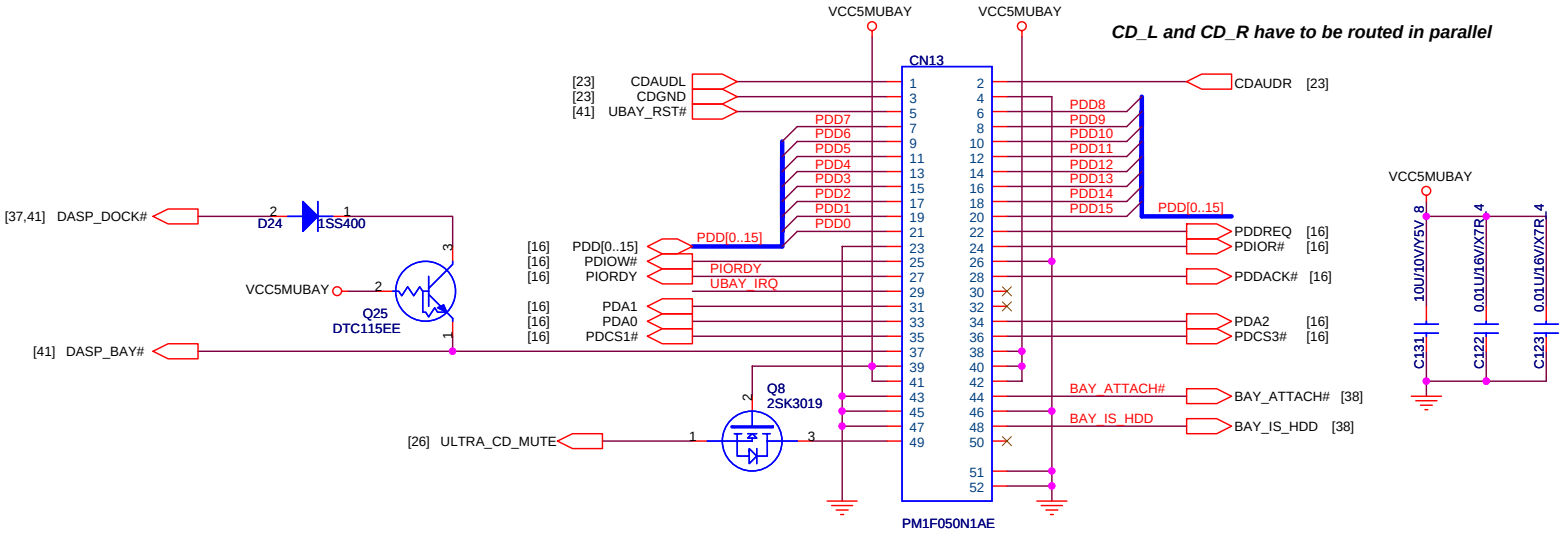

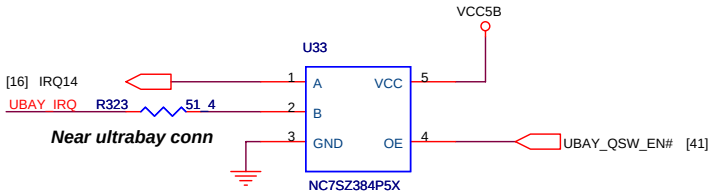

	BAY_ATTACH#	BAY_IS_HDD
NO_DEVICE	H	Don't care
OPTICAL	L	L
HDD	L	H

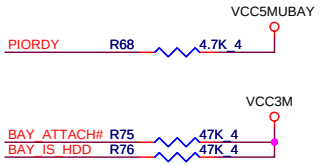

PROJECT : BV1

Quanta Computer Inc.

Size	Document Number	Rev
Custom	BAY I/F CONN	3C

Date: Thursday, October 06, 2005 Sheet 21 of 73

*USB port(straddle type) *2*

1. Common mode choke coil : TDK ACM2012-900 (reserved)

Place these resistors as the chole coil are also placed on the same pads of these two 0ohm resistors (0603size)

2. PGB0010603 ESD diode and 150U cap should close to USB conn

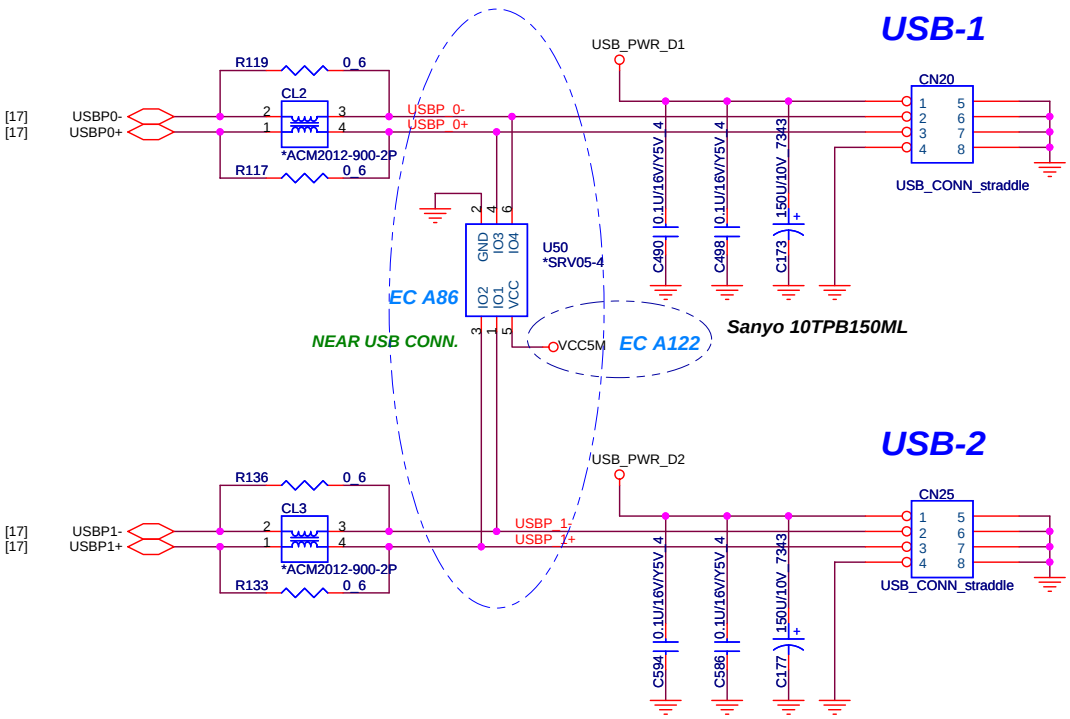

Change to TI solution (TPS2051 + TPS2052 power switch)
2004/12/09 Thunder

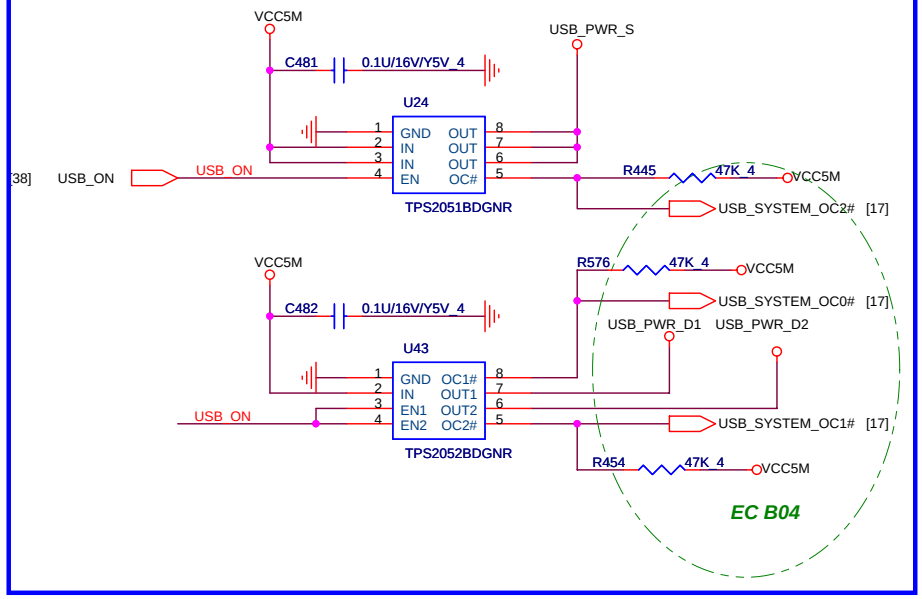

USB Bracket

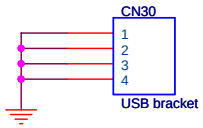

USB-3

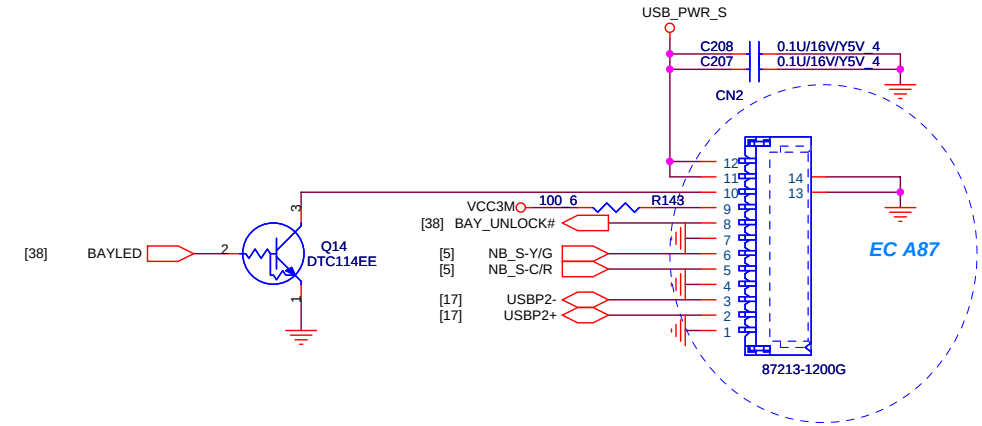

PROJECT : BV1
Quanta Computer Inc.

Size	Document Number	Rev
Custom	USB Ports	3C

Date: Thursday, October 06, 2005 Sheet 22 of 73

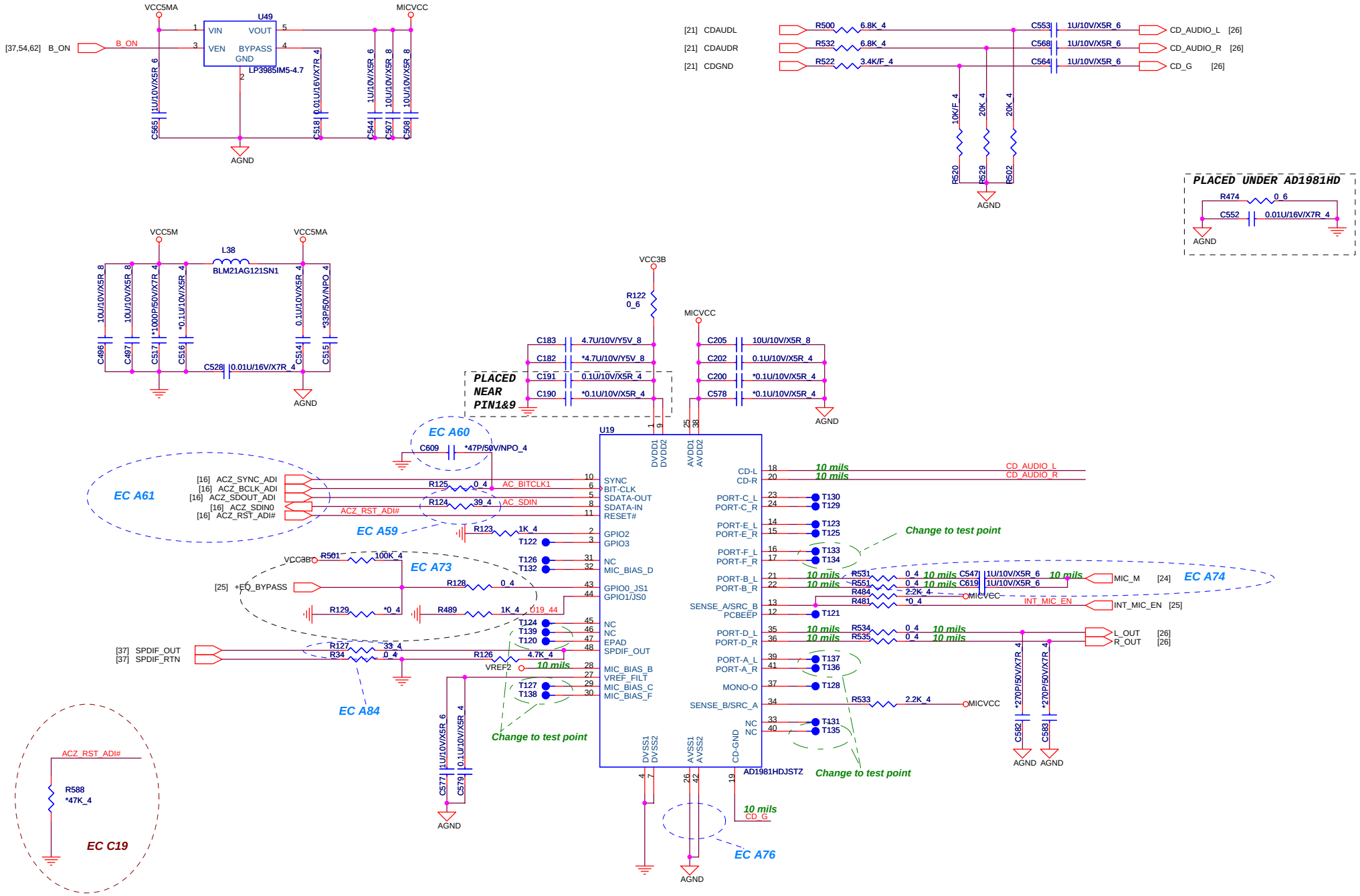

PROJECT : BV1

Quanta Computer Inc.

Size	Document Number	Rev
Custom	AUDIO HD CODEC	3C
Date: Thursday, October 06, 2005	Sheet 23 of 73	

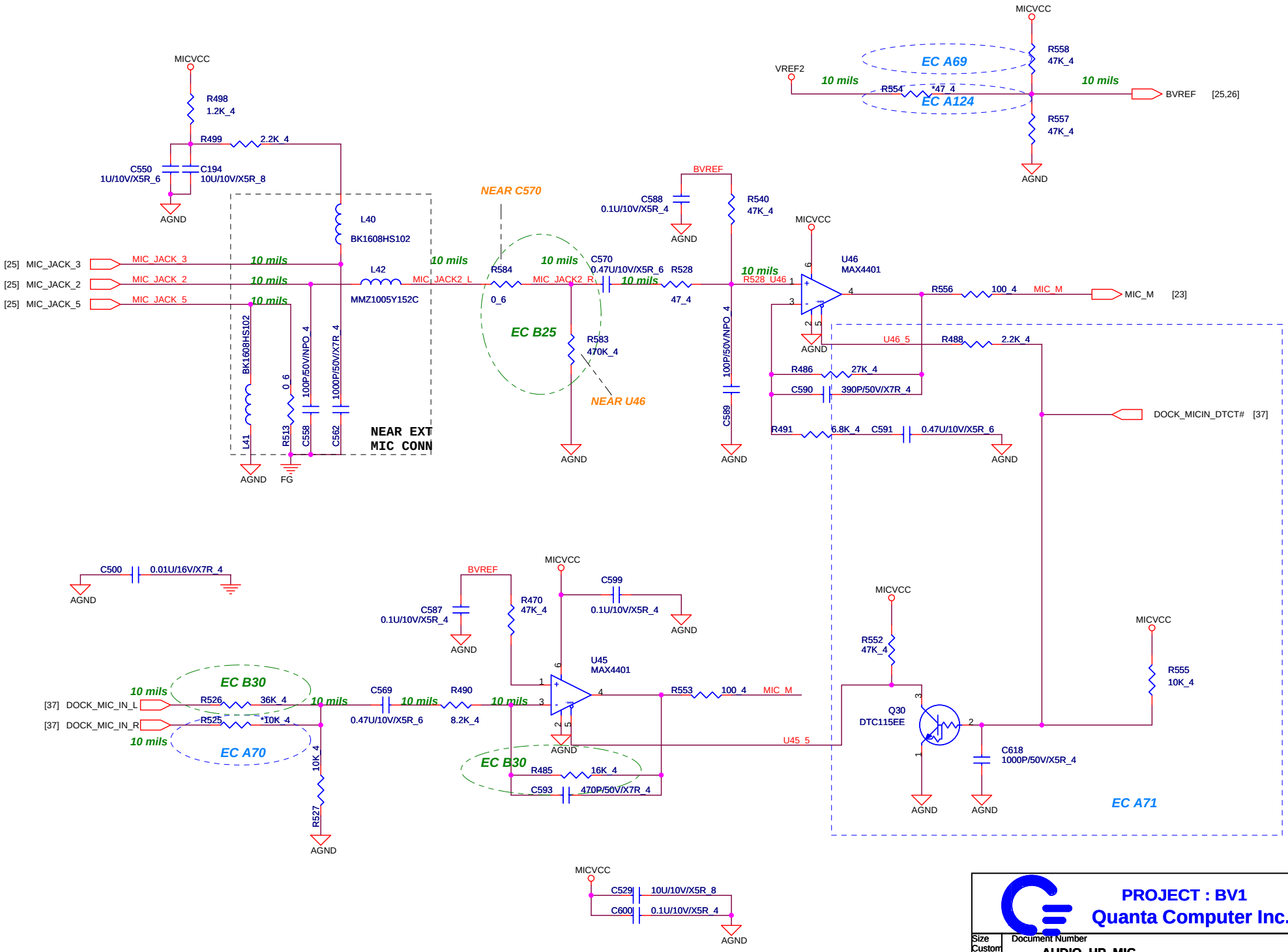

PROJECT : BV1
Quanta Computer Inc.

Size	Document Number	Rev
Custom	AUDIO_HP_MIC	3C

Date: Thursday, October 06, 2005 Sheet 24 of 73

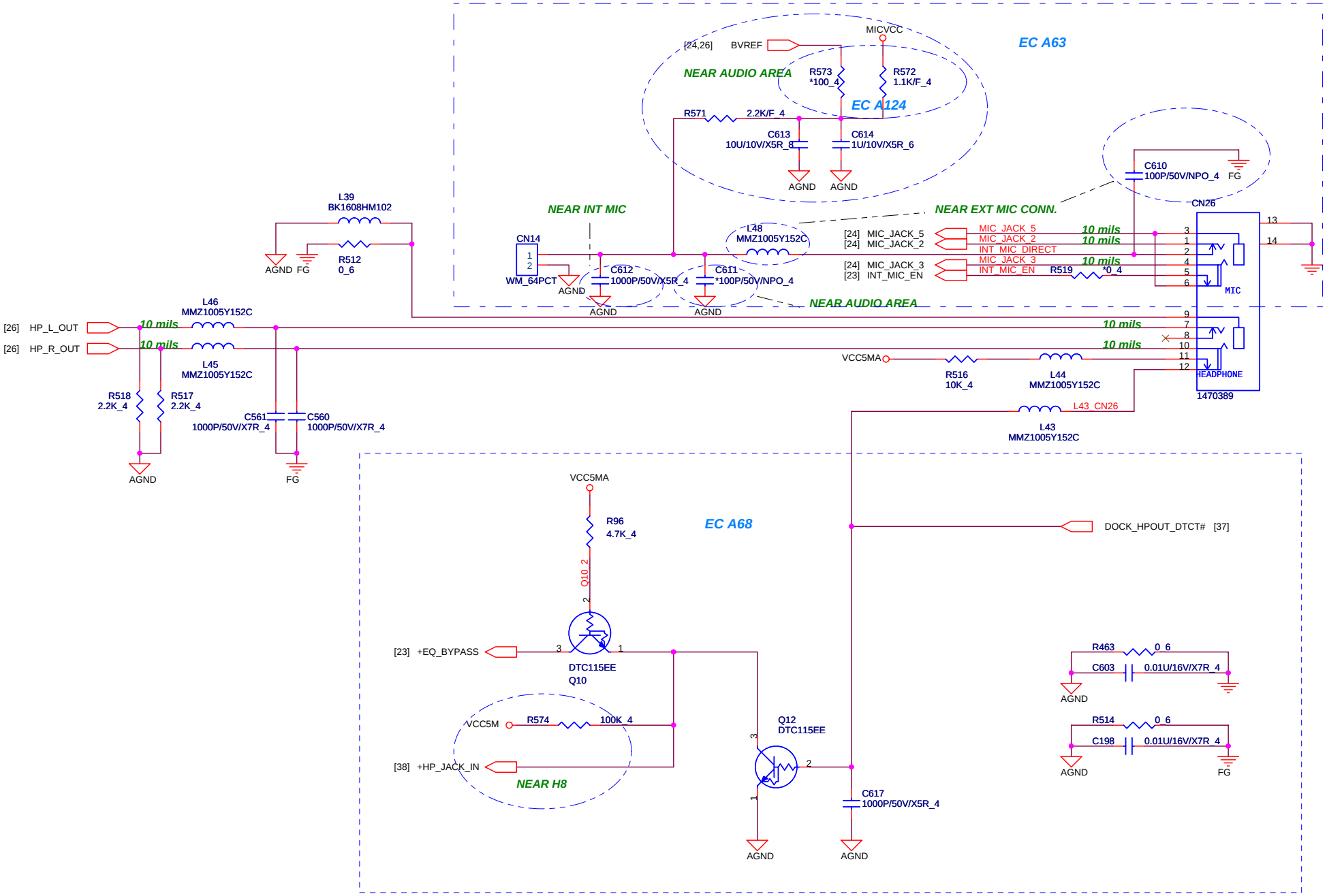

PROJECT : BV1

Quanta Computer Inc.

Size	Document Number	Rev
Custom	MIC_AMP	3C

Date: Thursday, October 06, 2005 Sheet 25 of 73

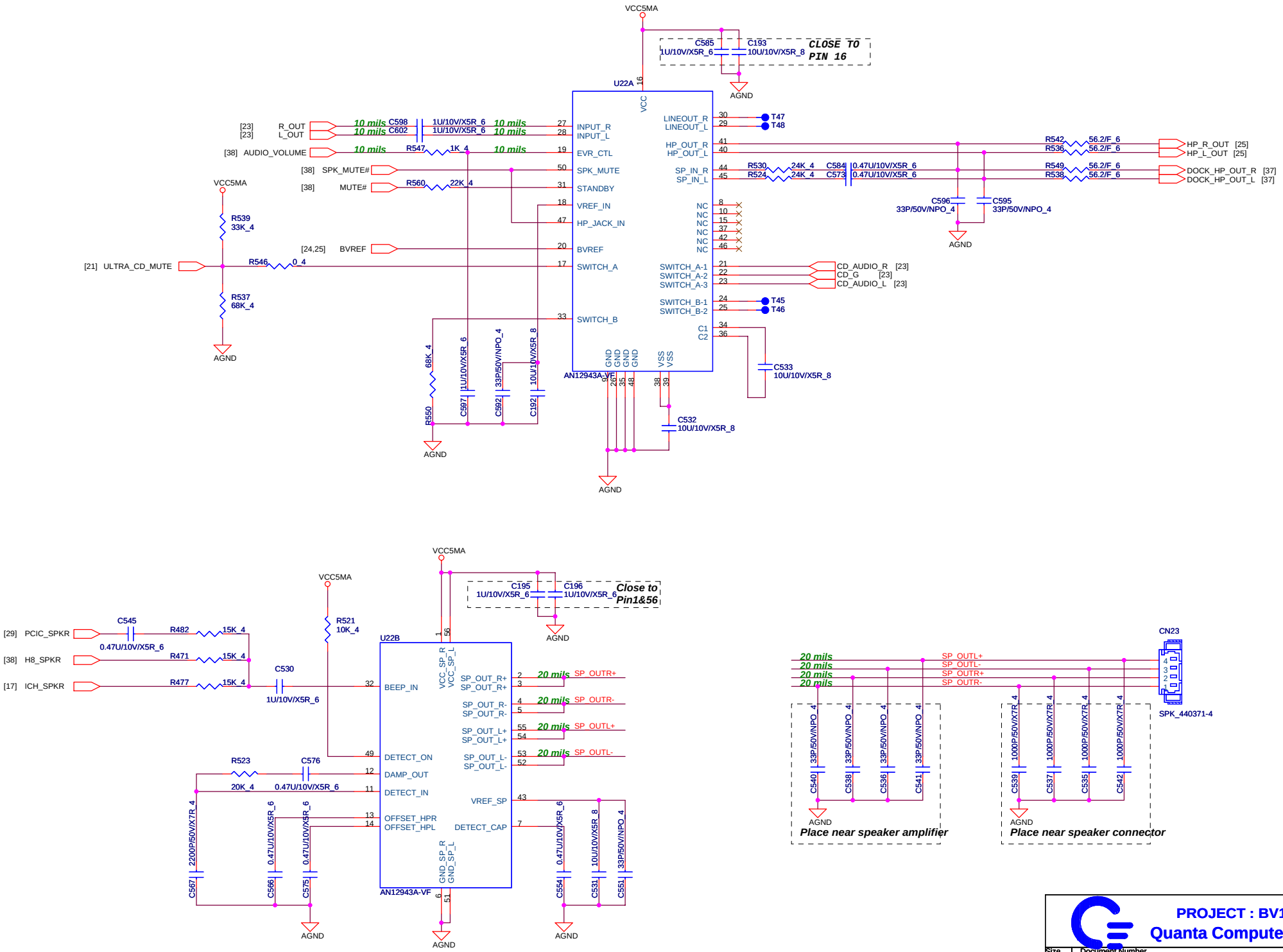

PROJECT : BV1

Quanta Computer Inc.

Size	Document Number	Rev
Custom	AUDIO HDP AMP AN12943A	3C
Date: Thursday, October 06, 2005	Sheet 26 of 73	

MDC1.5 CONNECTOR

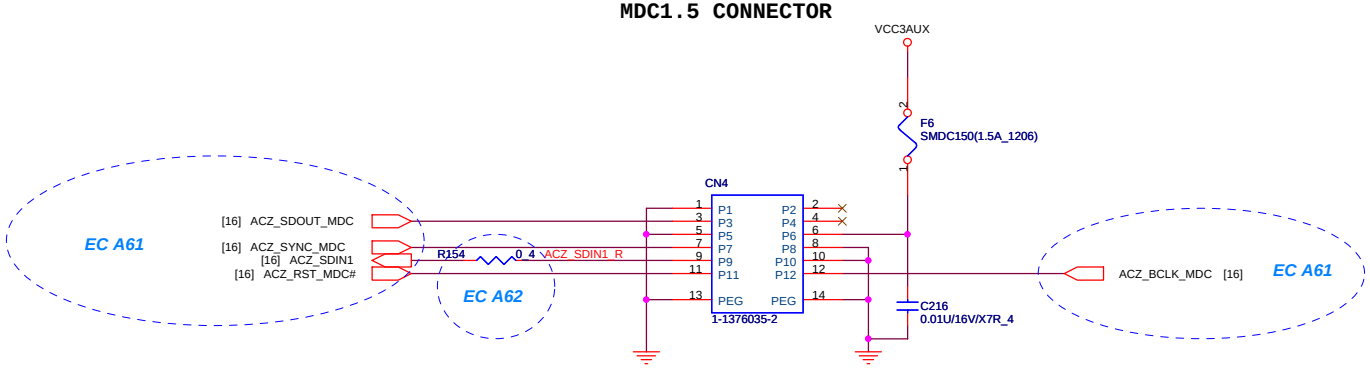

PROJECT : BV1

Quanta Computer Inc.

Size	Document Number	Rev
Custom	MDC	3C

Date: Thursday, October 06, 2005 Sheet 27 of 73

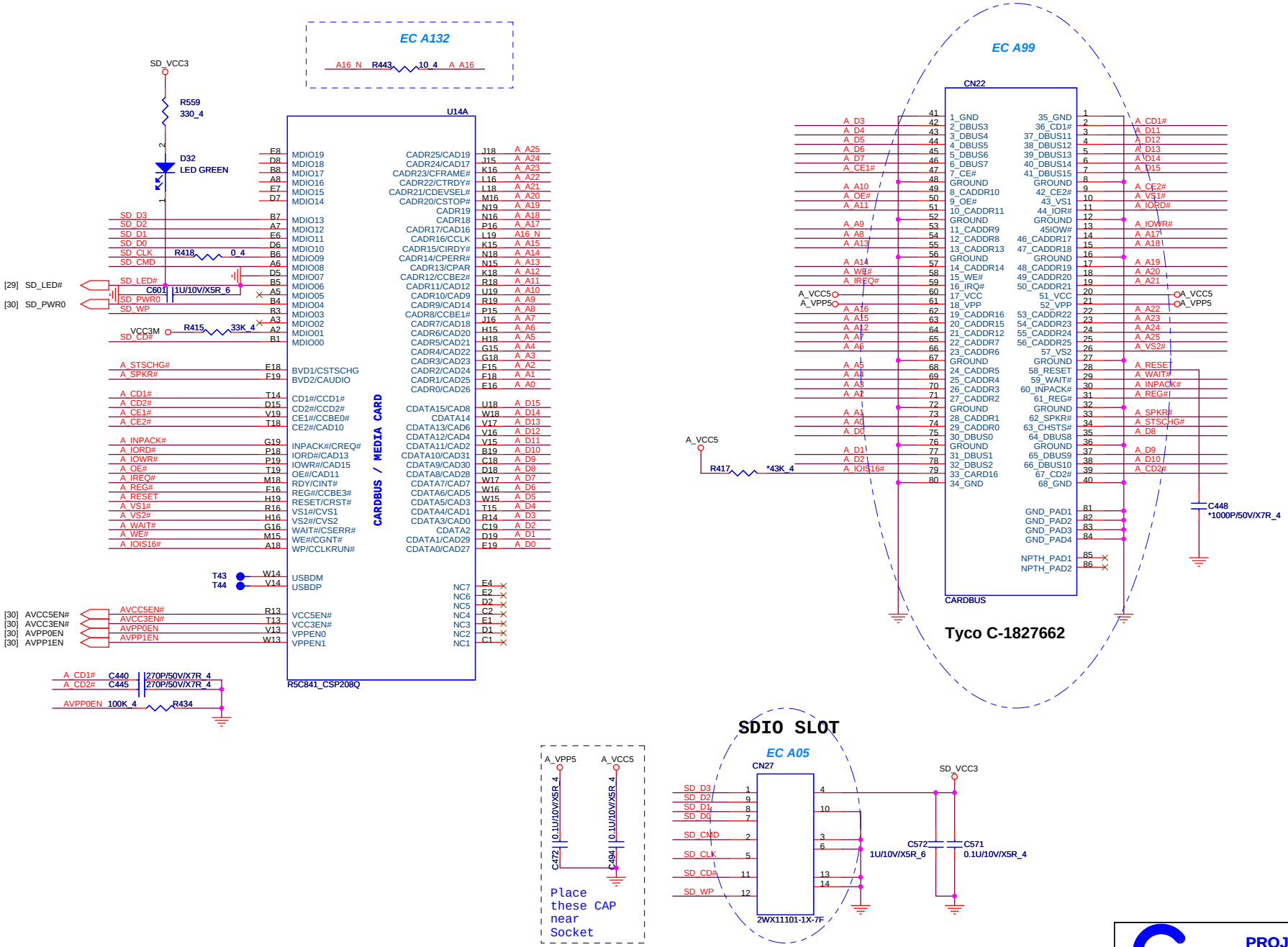

PROJECT : BV1

Quanta Computer Inc.

Size	Document Number	Rev
Custom	R5C841(CARDBUS)-1	3C

Date: Thursday, October 06, 2005 Sheet 28 of 73

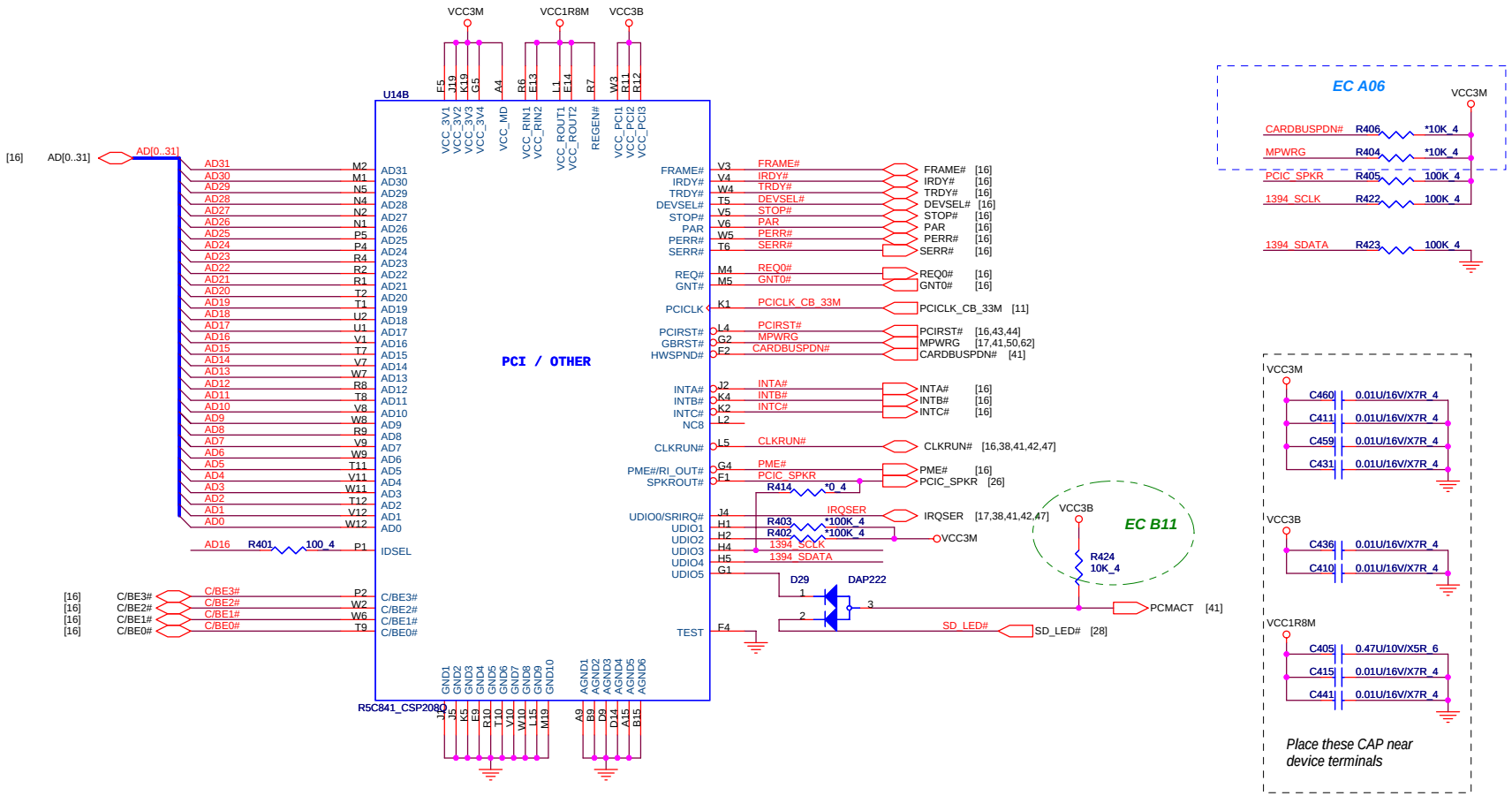

PROJECT : BV1

Quanta Computer Inc.

Size	Document Number	Rev
Custom	R5C841(PCI)-2	3C

Date: Thursday, October 06, 2005 Sheet 29 of 73

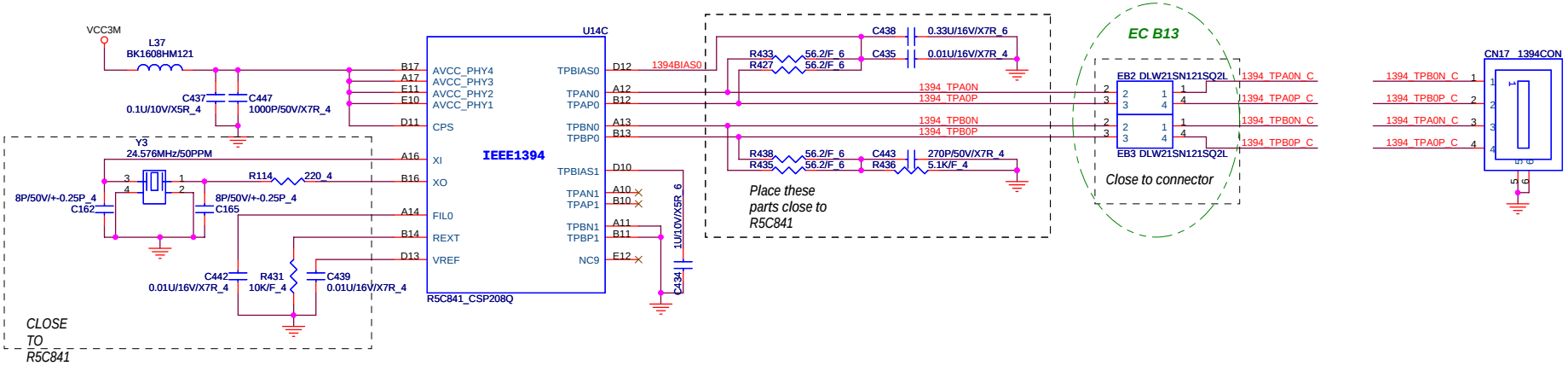

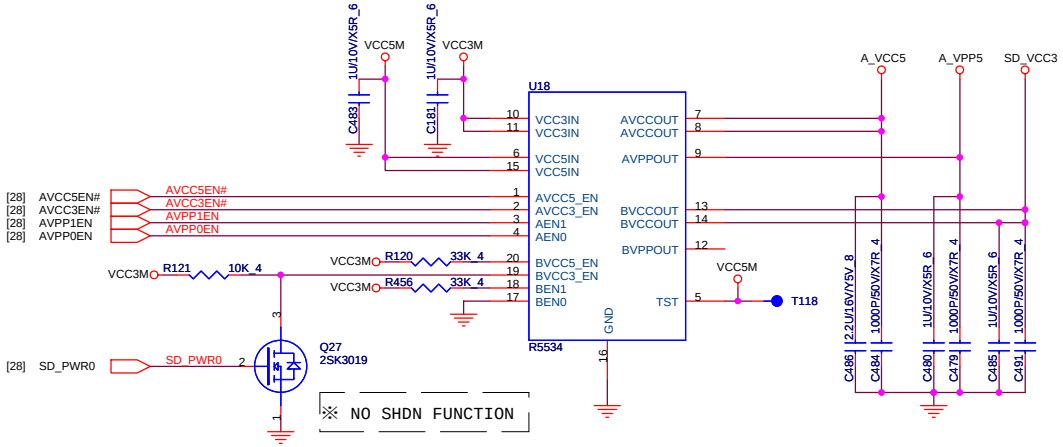

PROJECT : BV1

Quanta Computer Inc.

Size	Document Number	Rev
Custom	R5C841(1394)-3	3C

Date: Thursday, October 06, 2005 Sheet 30 of 73

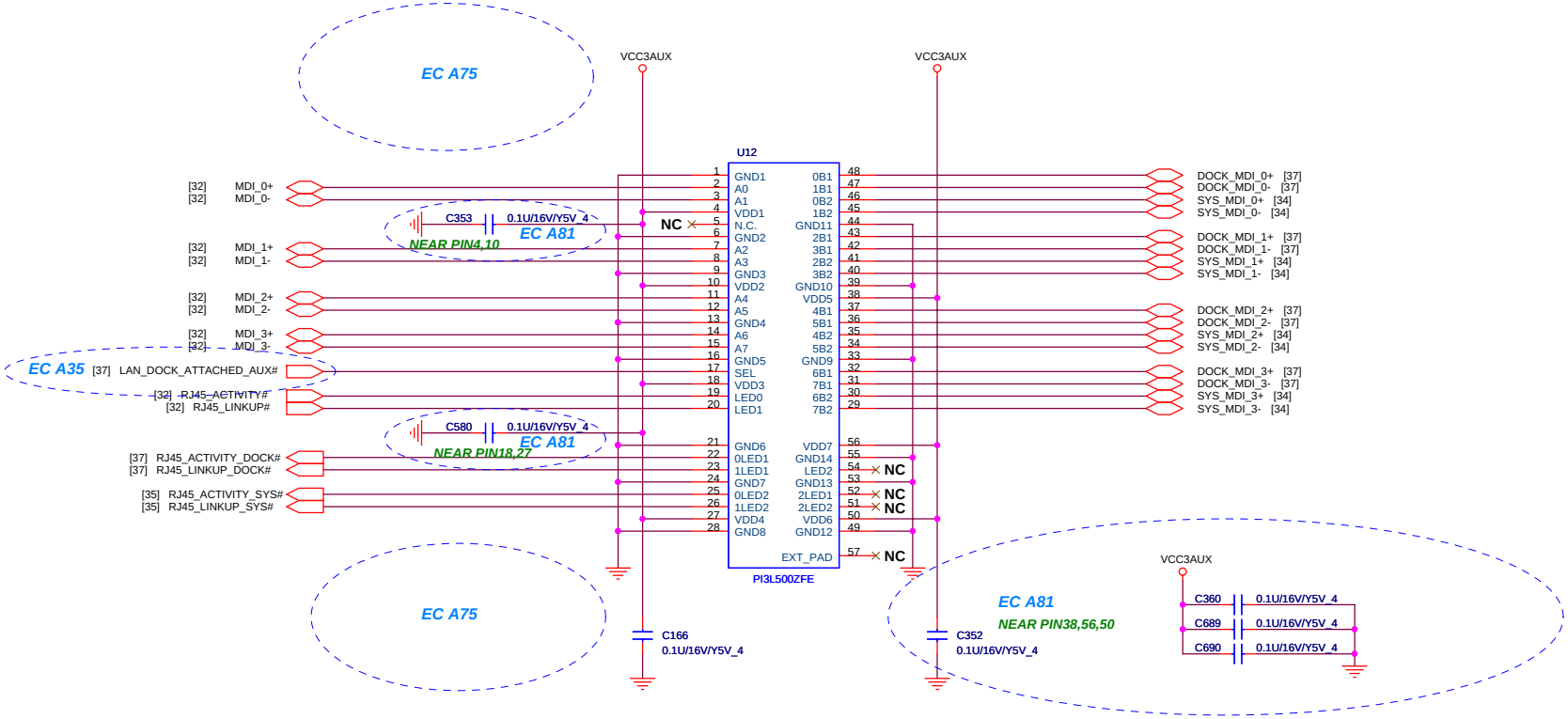

PROJECT : BV1

Quanta Computer Inc.

Size	Document Number	Rev
Custom	GIGABIT LAN SW	3C

Date: Thursday, October 06, 2005 Sheet 31 of 73

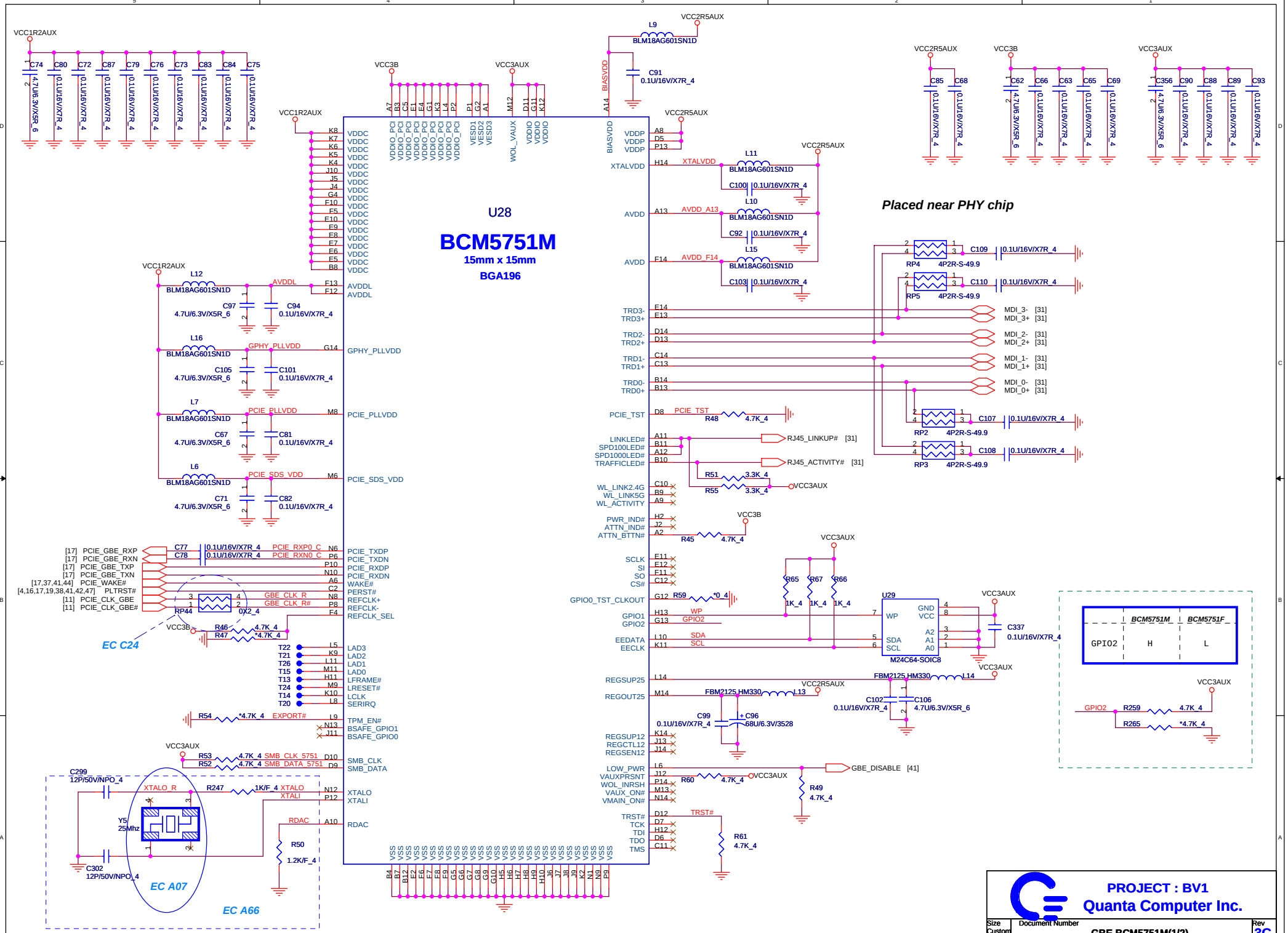
U28
BCM5751M
15mm x 15mm
BGA196
Placed near PHY chip
EC C24
EC A07
EC A66
PROJECT : BV1
Quanta Computer Inc.
Size Custom
Document Number
GBE BCM5751M(1/2)
Rev 3C
Date: Thursday, October 06, 2005
Sheet 32 of 73

<BLANK PAGE>

PROJECT : BV1
Quanta Computer Inc.

Size	Document Number	Rev
Custom	<BLANK PAGE>	3C

Date: Thursday, October 06, 2005 Sheet 33 of 73

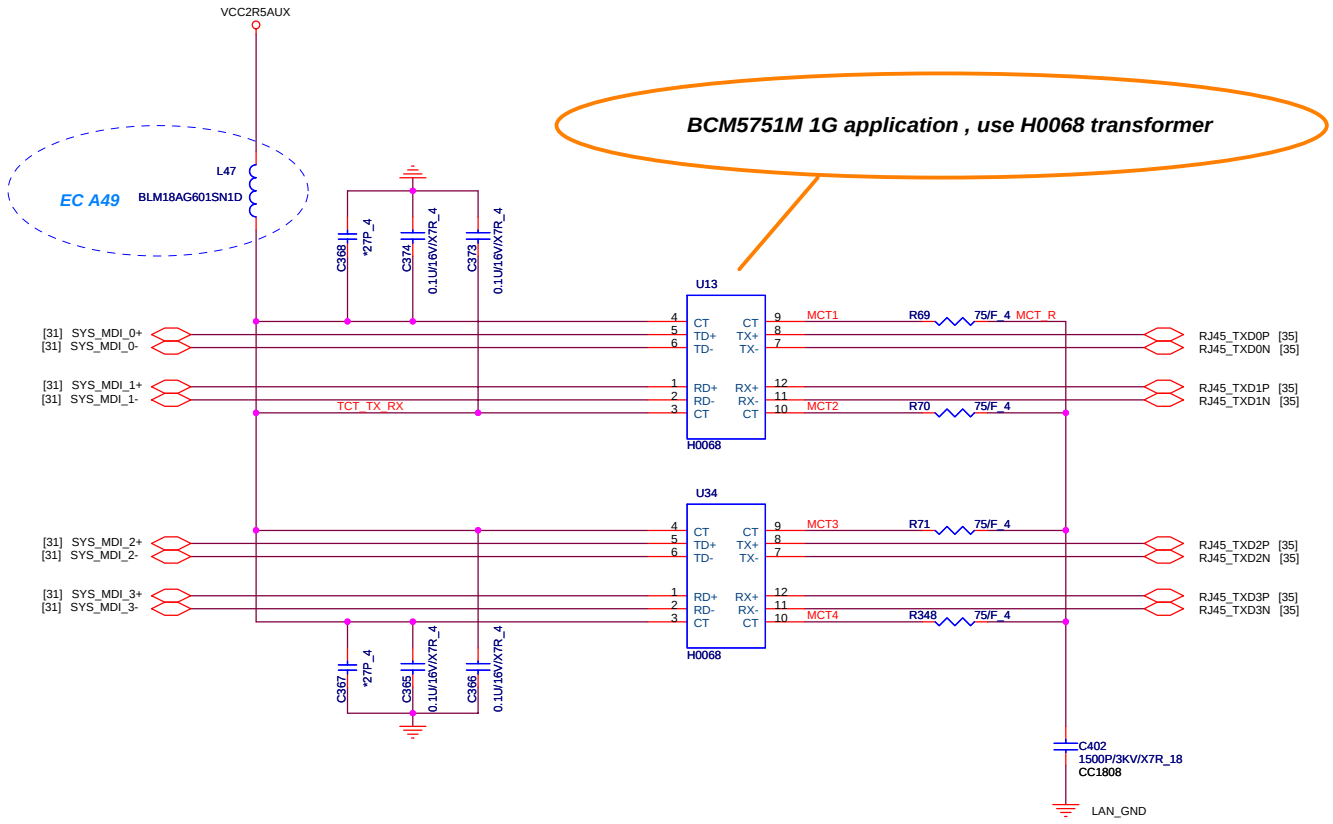

PROJECT : BV1

Quanta Computer Inc.

Size	Document Number	Rev
Custom	GBE MAGNETICS	3C

Date: Thursday, October 06, 2005 Sheet 34 of 73

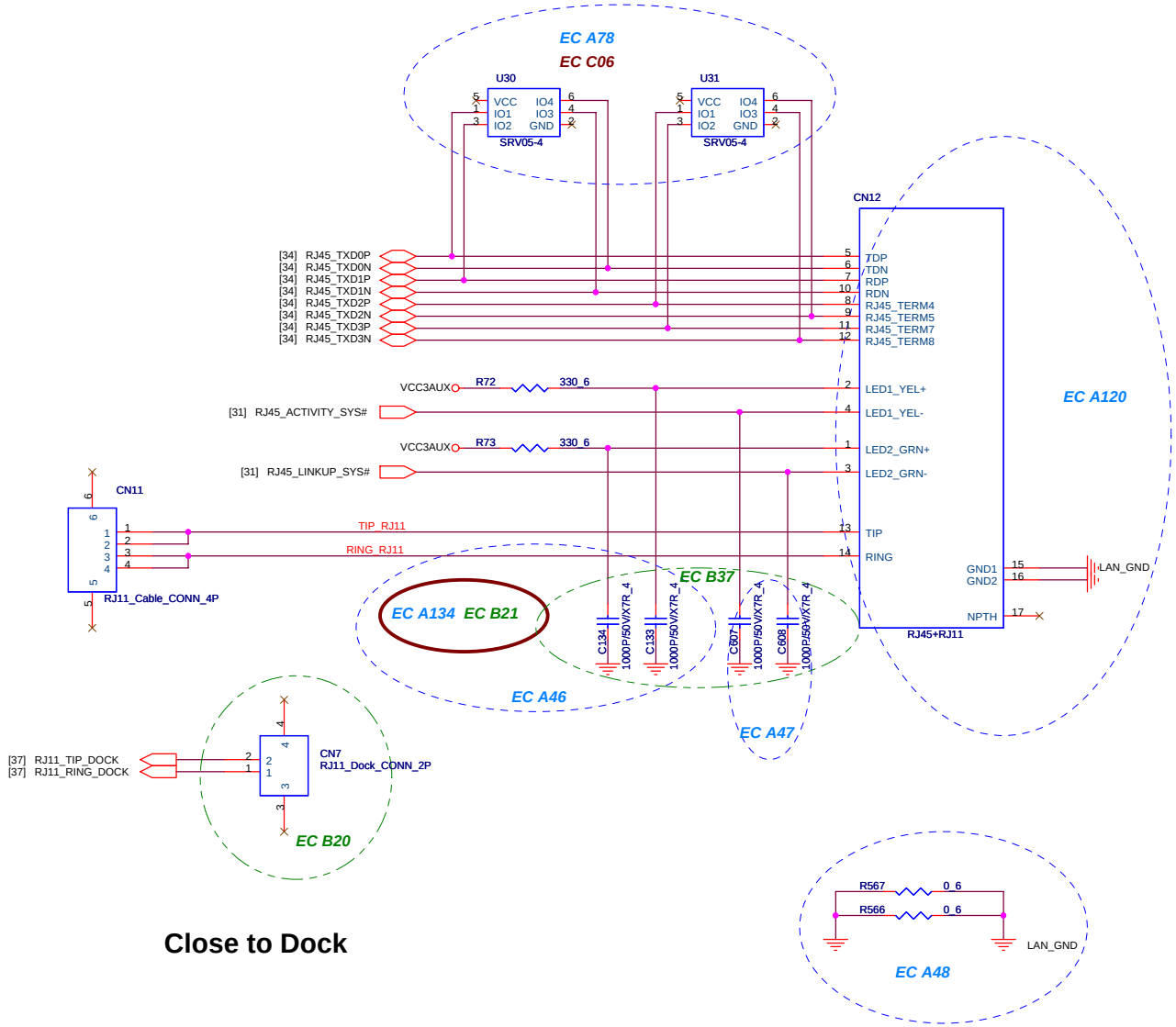

Close to Dock

PROJECT : BV1

Quanta Computer Inc.

Size	Document Number	Rev
Custom	RJ11/RJ45 CONNECTOR	3C

Date: Thursday, October 06, 2005 Sheet 35 of 73

BLANK

PROJECT : BV1
Quanta Computer Inc.

Size	Document Number	Rev
Custom	MINI PCI SLOT	3C

Date: Thursday, October 06, 2005 Sheet 36 of 73

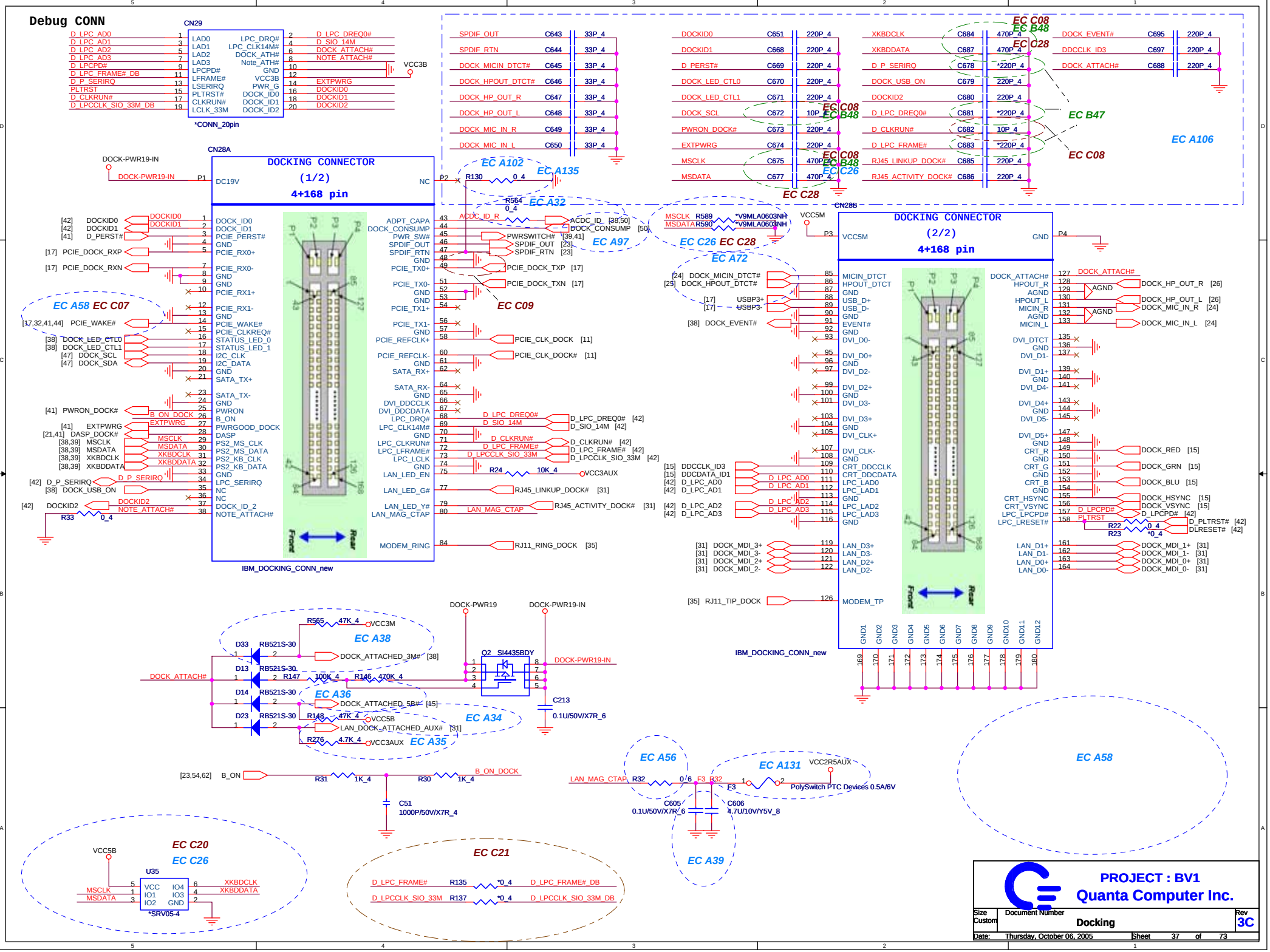
Debug CONN
CN29
*CONN_20pin
CN28A
DOCKING CONNECTOR
(1/2)
4+168 pin
IBM_DOCKING_CONN_new
CN28B
DOCKING CONNECTOR
(2/2)
4+168 pin
IBM_DOCKING_CONN_new
EC A106
EC A102
EC A135
EC A32
EC A97
EC A72
EC C09
EC A58 EC C07
EC A38
EC A36
EC A34
EC A35
EC A56
EC A131
EC A58
EC C20
EC C26
EC C21
EC A39
PolySwitch PTC Devices 0.5A/6V
PROJECT : BV1
Quanta Computer Inc.
Size Custom
Document Number
Docking
Rev 3C
Date: Thursday, October 06, 2005
Sheet 37 of 73

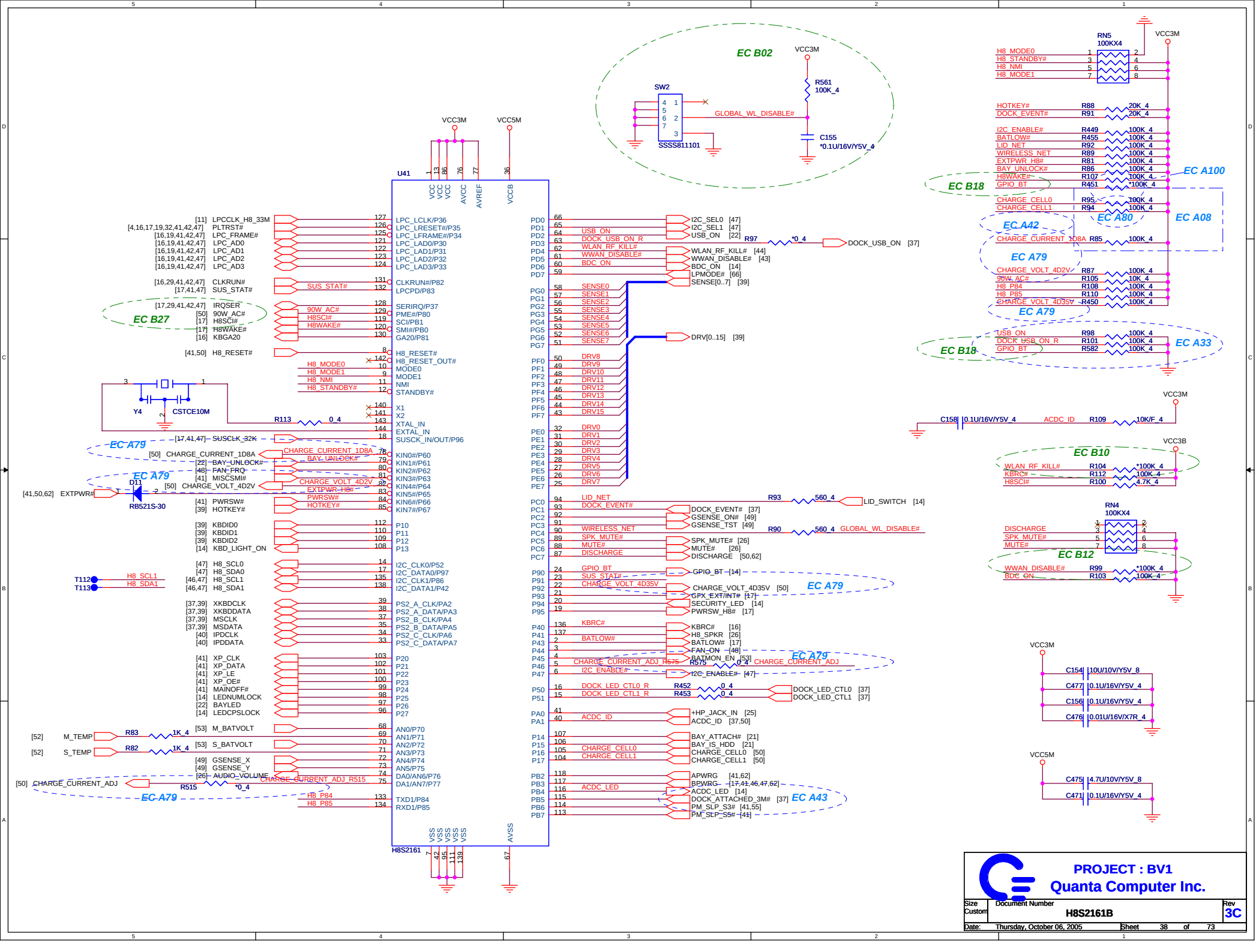
EC B02
VCC3M
R561
100K_4
SW2
GLOBAL_WL_DISABLE#
C155
*0.1U/16V/Y5V_4
SSSS811101
RN5
100KX4
H8_MODE0
H8_STANDBY#
H8_NMI
H8_MODE1
HOTKEY#
DOCK_EVENT#
I2C_ENABLE#
BATLOW#
LID_NET
WIRELESS_NET
EXTPWR_H8#
BAY_UNLOCK#
H8WAKE#
GPIO_BT
CHARGE_CELL0
CHARGE_CELL1
CHARGE_CURRENT_1D8A
CHARGE_VOLT_4D2V
90W_AC#
H8_P84
H8_P85
CHARGE_VOLT_4D35V
USB_ON
DOCK_USB_ON_R
EC A100
EC B18
EC A80
EC A08
EC A42
EC A79
EC A33
VCC5M
U41
H8S2161
LPC_LCLK/P36
LPC_LRESET#/P35
LPC_LFRAME#/P34
LPC_LAD0/P30
LPC_LAD1/P31
LPC_LAD2/P32
LPC_LAD3/P33
CLKRUN#/P82
LPCPD/P83
SERIRQ/P37
PME#/P80
SCI/PB1
SMI#/PB0
GA20/P81
H8_RESET#
H8_RESET_OUT#
MODE0
MODE1
NMI
STANDBY#
X1
X2
XTAL_IN
EXTAL_IN
SUSCK_IN/OUT/P96
KIN0#/P60
KIN1#/P61
KIN2#/P62
KIN3#/P63
KIN4#/P64
KIN5#/P65
KIN6#/P66
KIN7#/P67
P10
P11
P12
P13
I2C_CLK0/P52
I2C_DATA0/P97
I2C_CLK1/P86
I2C_DATA1/P42
PS2_A_CLK/PA2
PS2_A_DATA/PA3
PS2_B_CLK/PA4
PS2_B_DATA/PA5
PS2_C_CLK/PA6
PS2_C_DATA/PA7
P20
P21
P22
P23
P24
P25
P26
P27
AN0/P70
AN1/P71
AN2/P72
AN3/P73
AN4/P74
AN5/P75
DA0/AN6/P76
DA1/AN7/P77
TXD1/P84
RXD1/P85
PD0
PD1
PD2
PD3
PD4
PD5
PD6
PD7
PG0
PG1
PG2
PG3
PG4
PG5
PG6
PG7
PF0
PF1
PF2
PF3
PF4
PF5
PF6
PF7
PE0
PE1
PE2
PE3
PE4
PE5
PE6
PE7
PC0
PC1
PC2
PC3
PC4
PC5
PC6
PC7
P90
P91
P92
P93
P94
P95
P40
P41
P43
P44
P45
P46
P47
P50
P51
PA0
PA1
P14
P15
P16
P17
PB2
PB3
PB4
PB5
PB6
PB7
VCC
AVCC
AVREF
VCCB
VSS
AVSS
EC B27
Y4
CSTCE10M
R113
0_4
EC A79
D11
RB521S-30
EXTPWR#
T112
T113
H8_SCL1
H8_SDA1
R83
1K_4
R82
1K_4
M_TEMP
S_TEMP
CHARGE_CURRENT_ADJ
R515
*0_4
CHARGE_CURRENT_ADJ_R515
R97
*0_4
DOCK_USB_ON
WLAN_RF_KILL#
WWAN_DISABLE#
BDC_ON
LPMODE#
SENSE[0..7]
DRV[0..15]
R93
560_4
LID_SWITCH
R90
560_4
GLOBAL_WL_DISABLE#
SPK_MUTE#
MUTE#
DISCHARGE
GPX_EXT/INT#
SECURITY_LED
PWRSW_H8#
R575
0_4
CHARGE_CURRENT_ADJ
R452
0_4
R453
0_4
DOCK_LED_CTL0
DOCK_LED_CTL1
ACDC_ID
+HP_JACK_IN
BAY_ATTACH#
BAY_IS_HDD
APWRG
BPWRG
DOCK_ATTACHED_3M#
PM_SLP_S3#
PM_SLP_S5#
EC A43
C158
0.1U/16V/Y5V_4
R109
10K/F_4
VCC3B
EC B10
R104
*100K_4
R112
100K_4
R100
4.7K_4
RN4
100KX4
R99
*100K_4
R103
100K_4
EC B12
C154
10U/10V/Y5V_8
C477
0.1U/16V/Y5V_4
C156
0.1U/16V/Y5V_4
C476
0.01U/16V/X7R_4
C475
4.7U/10V/Y5V_8
C471
0.1U/16V/Y5V_4
PROJECT : BV1
Quanta Computer Inc.
Size
Custom
Document Number
H8S2161B
Rev
3C
Date: Thursday, October 06, 2005
Sheet 38 of 73

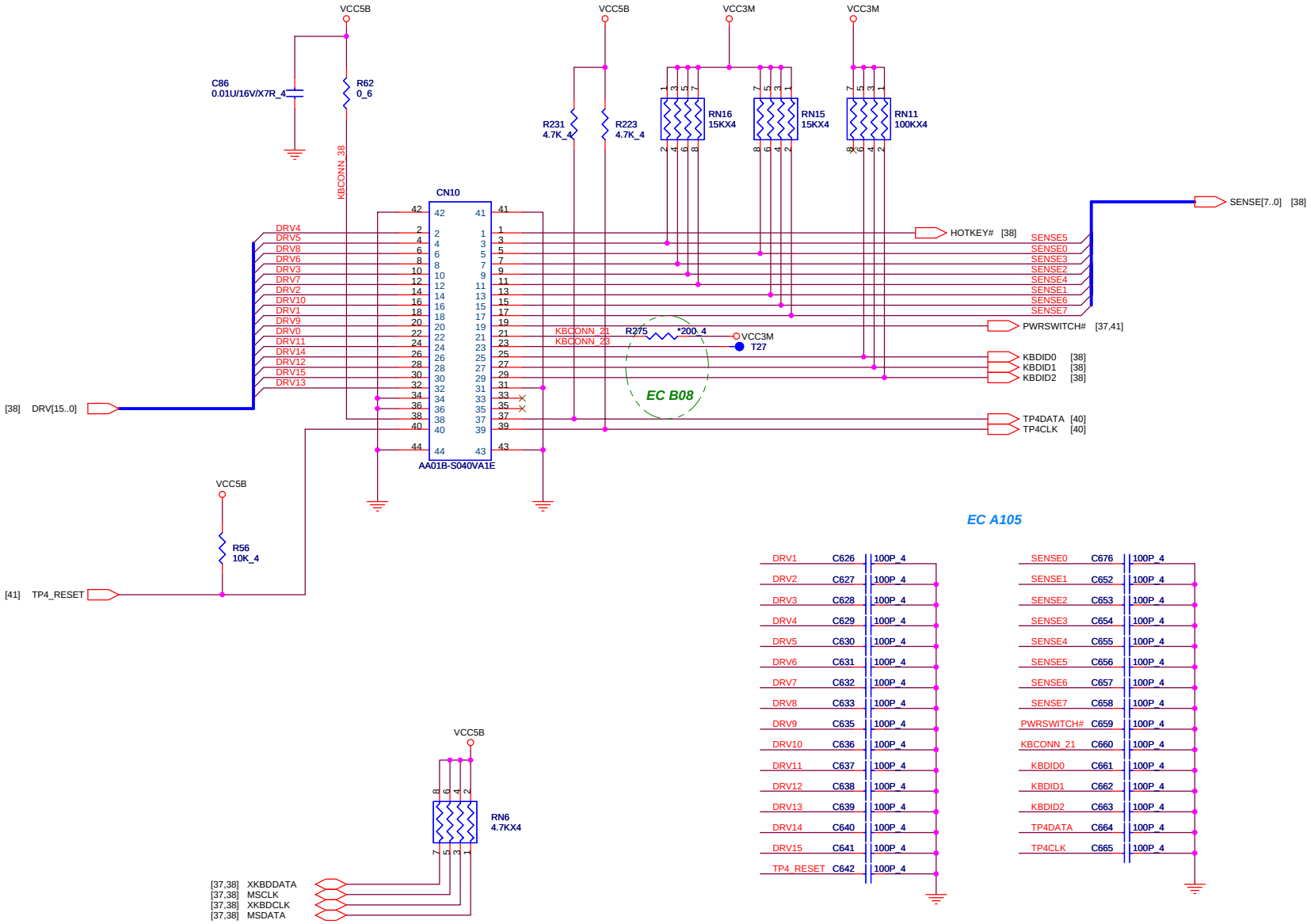

EC A105

DRV1	C626	100P_4
DRV2	C627	100P_4
DRV3	C628	100P_4
DRV4	C629	100P_4
DRV5	C630	100P_4
DRV6	C631	100P_4
DRV7	C632	100P_4
DRV8	C633	100P_4
DRV9	C635	100P_4
DRV10	C636	100P_4
DRV11	C637	100P_4
DRV12	C638	100P_4
DRV13	C639	100P_4
DRV14	C640	100P_4
DRV15	C641	100P_4
TP4_RESET	C642	100P_4

SENSE0	C676	100P_4
SENSE1	C652	100P_4
SENSE2	C653	100P_4
SENSE3	C654	100P_4
SENSE4	C655	100P_4
SENSE5	C656	100P_4
SENSE6	C657	100P_4
SENSE7	C658	100P_4
PWRSWITCH#	C659	100P_4
KBCONN_21	C660	100P_4
KBDID0	C661	100P_4
KBDID1	C662	100P_4
KBDID2	C663	100P_4
TP4DATA	C664	100P_4
TP4CLK	C665	100P_4

PROJECT : BV1
Quanta Computer Inc.

Size	Document Number	Rev
Custom	KB Connector	3C

Date: Thursday, October 06, 2005 Sheet 39 of 73

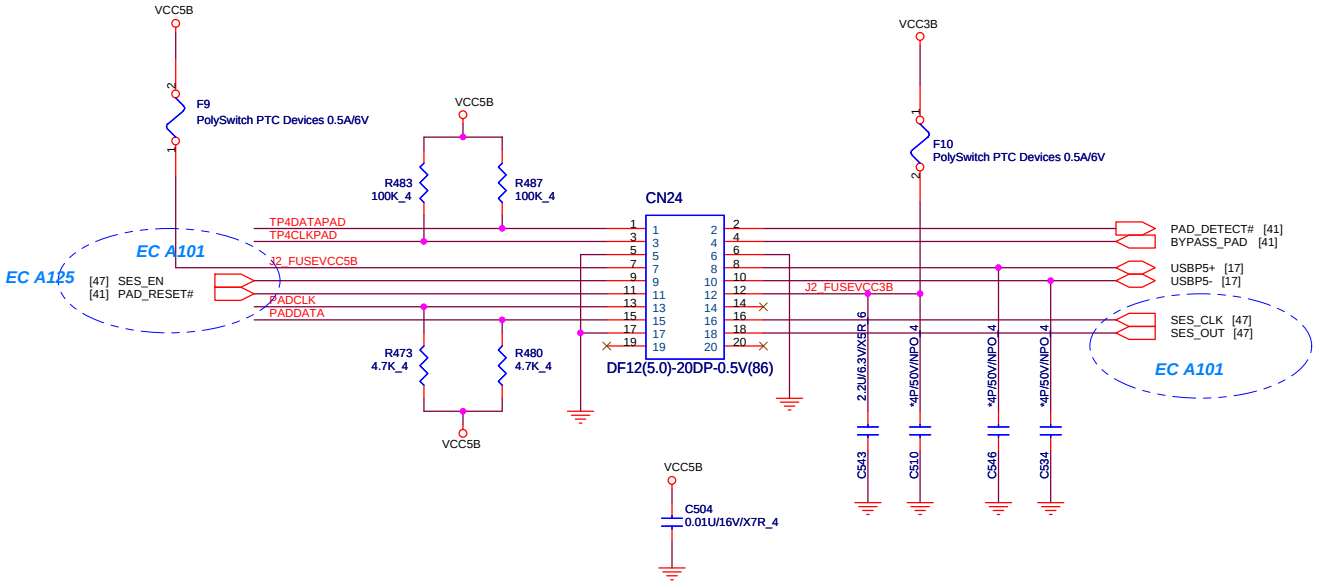

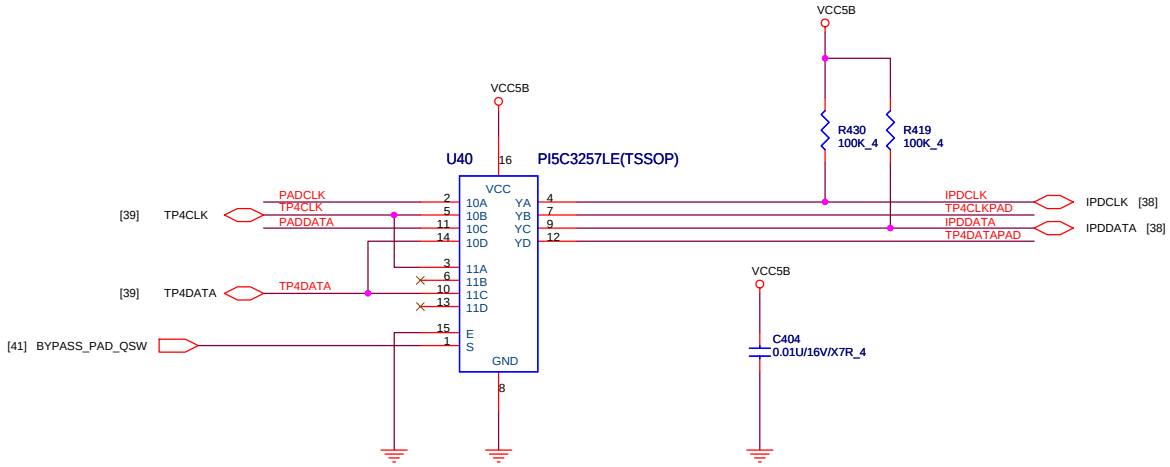

PROJECT : BV1

Quanta Computer Inc.

Size	Document Number	Rev
Custom	Touch Pad Connector	3C

Date: Thursday, October 06, 2005 Sheet 40 of 73

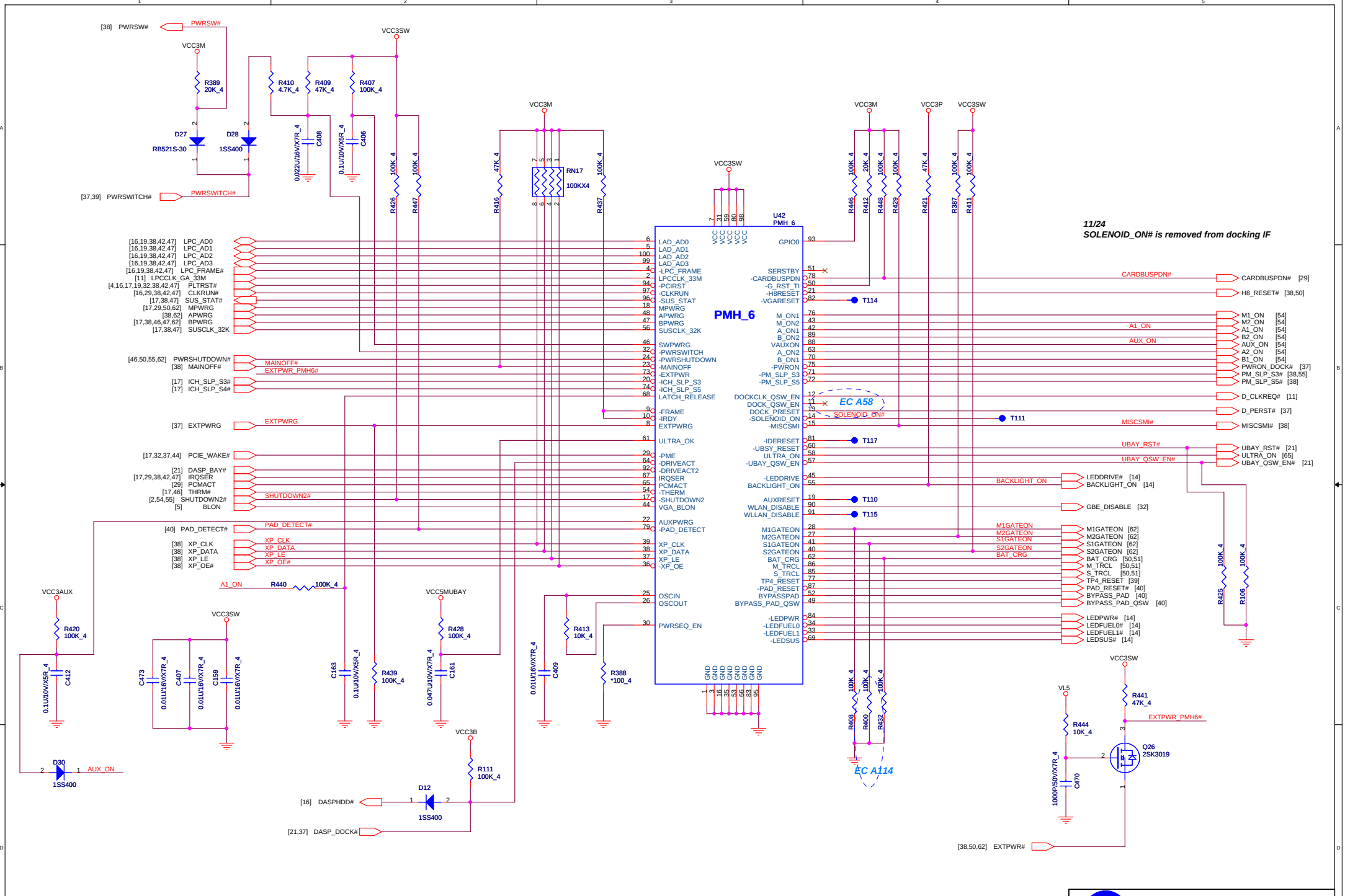
PMH_6
U42
PMH_6
11/24
SOLENOID_ON# is removed from docking IF
EC A58
EC A114
PROJECT : BV1
Quanta Computer Inc.
Size Custom
Document Number
PMH6
Rev 3C
Date: Thursday, October 06, 2005
Sheet 41 of 73

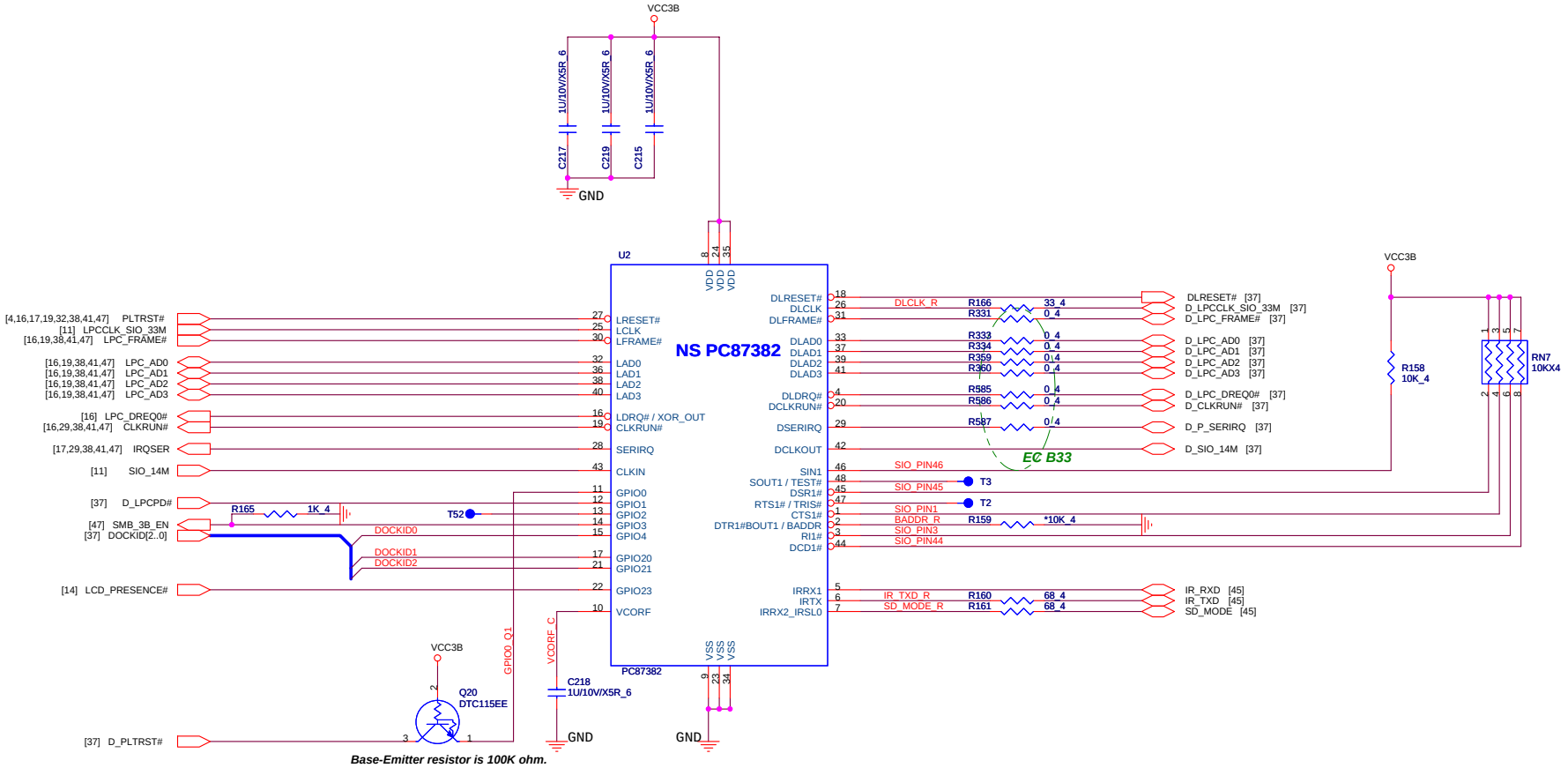

PROJECT : BV1

Quanta Computer Inc.

Size	Document Number	Rev
Custom	Super IO	3C

Date: Thursday, October 06, 2005 Sheet 42 of 73

MINI PCIE CONN-1 FOR WWAN

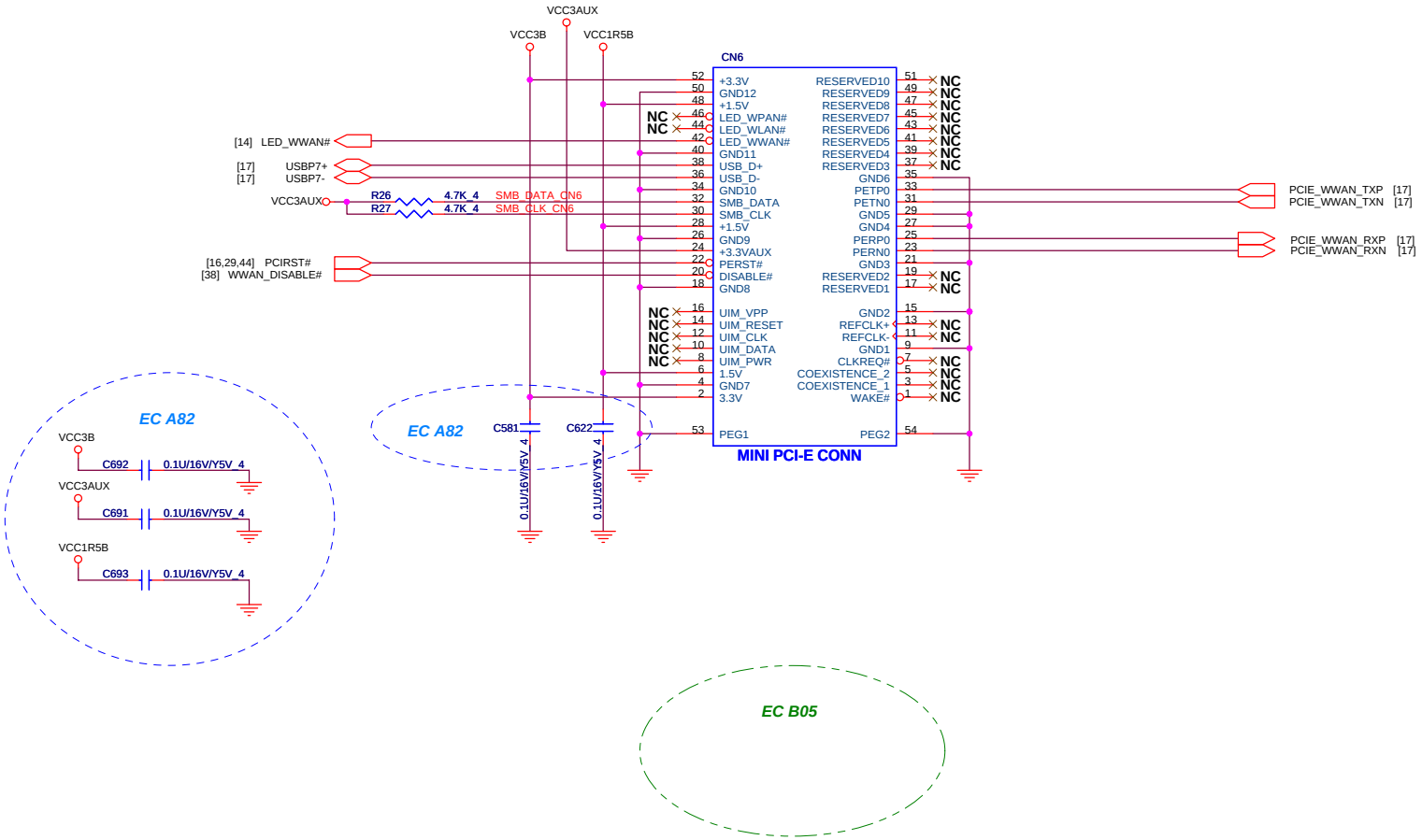

Size Custom	Document Number MINI PCIE CONN-1	Rev 3C
Date: Thursday, October 06, 2005	Sheet 43 of 73	

PROJECT : BV1
Quanta Computer Inc.

MINI PCIE CONN-2 FOR WLAN

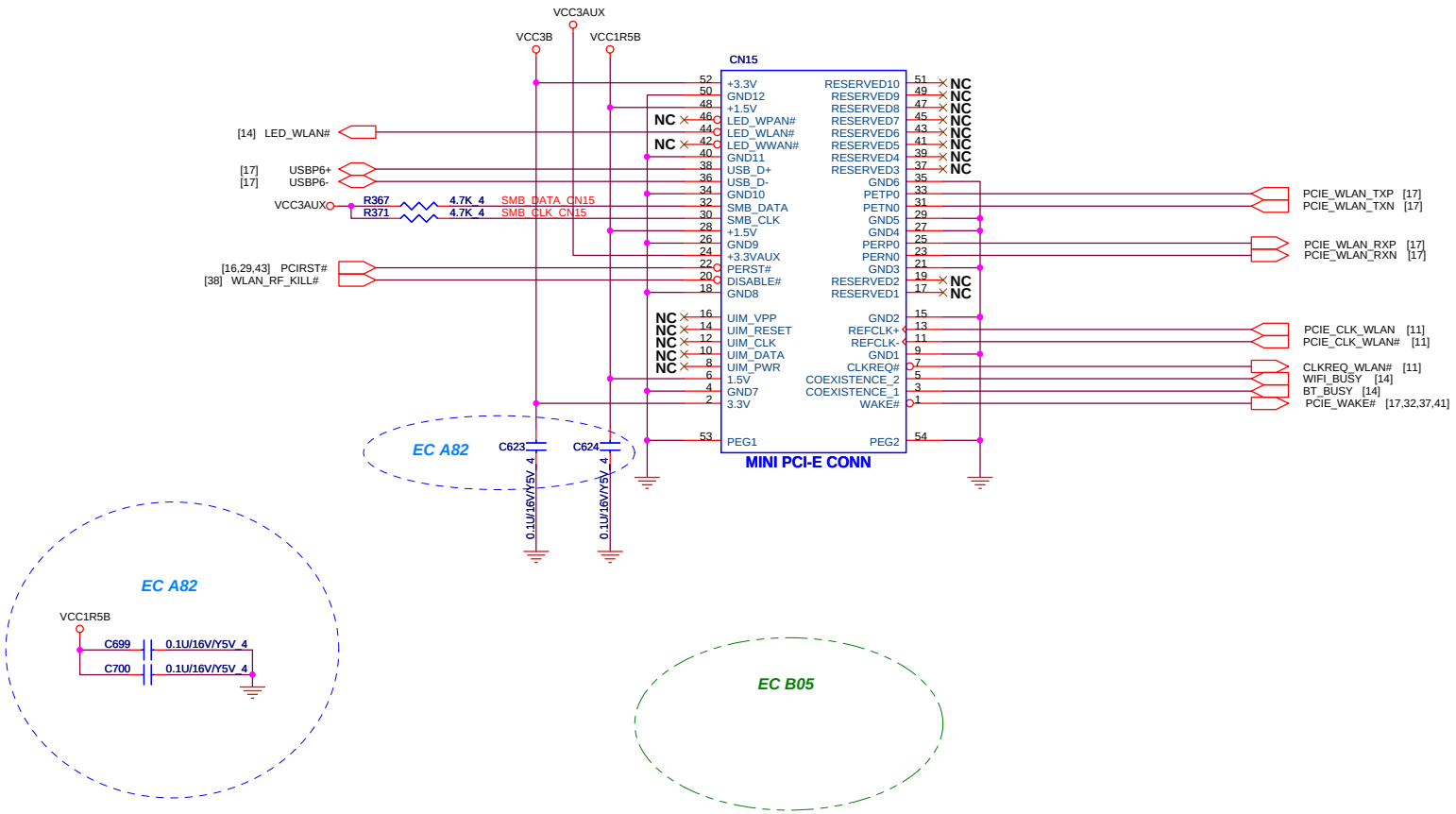

PROJECT : BV1

Quanta Computer Inc.

Size	Document Number	Rev
Custom	MINI PCIE CONN-2	3C

Date: Thursday, October 06, 2005 Sheet 44 of 73

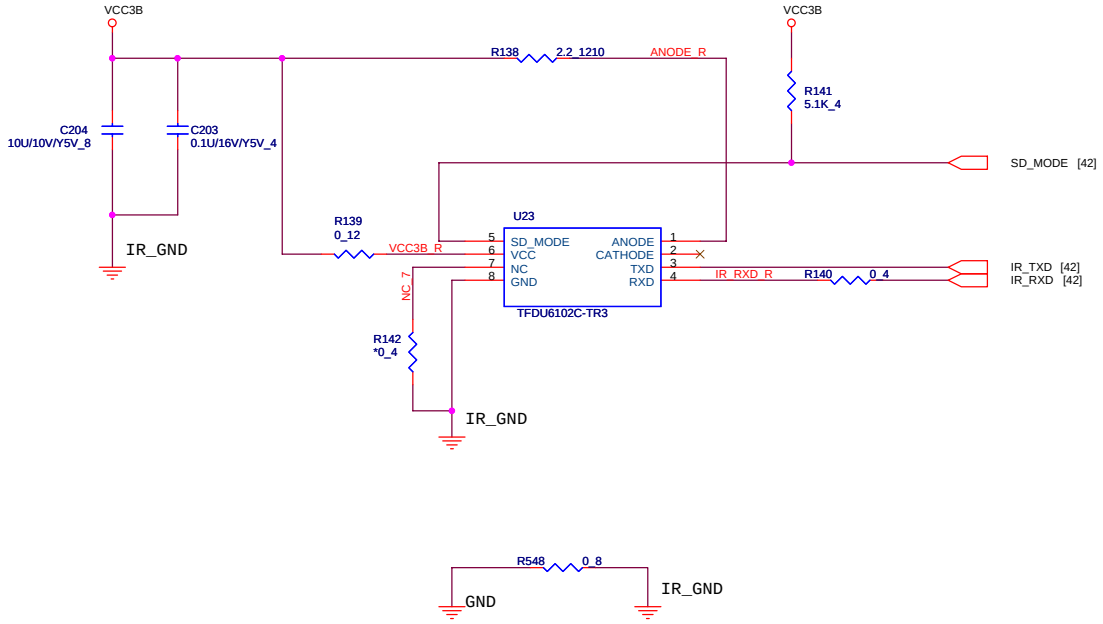

PROJECT : BV1

Quanta Computer Inc.

Size	Document Number	Rev
Custom	IR Module	3C

Date: Thursday, October 06, 2005 Sheet 45 of 73

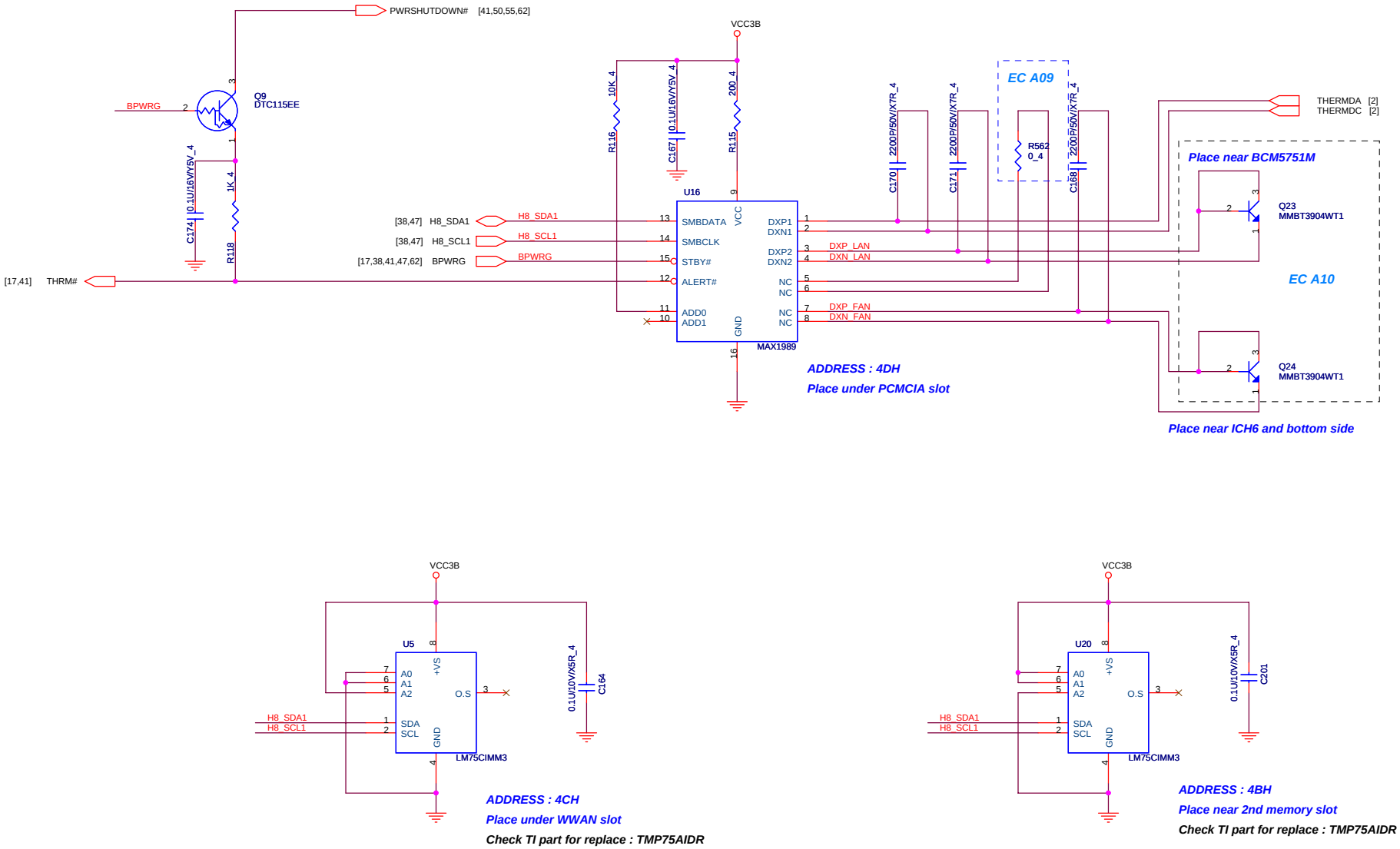

PROJECT : BV1

Quanta Computer Inc.

Size	Document Number	Rev
Custom	Thermal Sensor	3C

Date: Thursday, October 06, 2005 Sheet 46 of 73

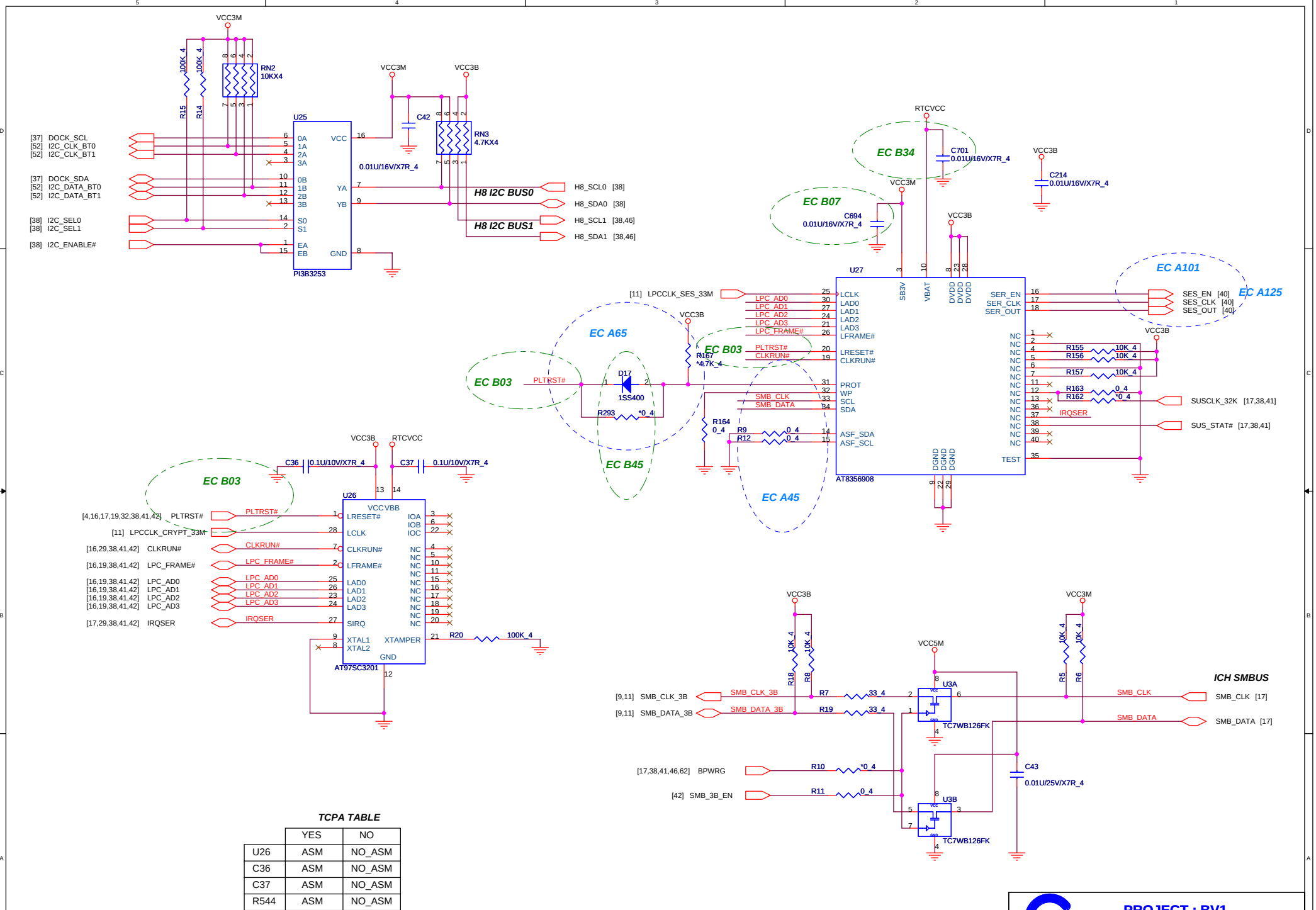

TCPA TABLE

	YES	NO
U26	ASM	NO_ASM
C36	ASM	NO_ASM
C37	ASM	NO_ASM
R544	ASM	NO_ASM
R545	NO_ASM	ASM

PROJECT : BV1

Quanta Computer Inc.

Size	Document Number	Rev
Custom	TPM	3C

Date: Thursday, October 06, 2005 Sheet 47 of 73

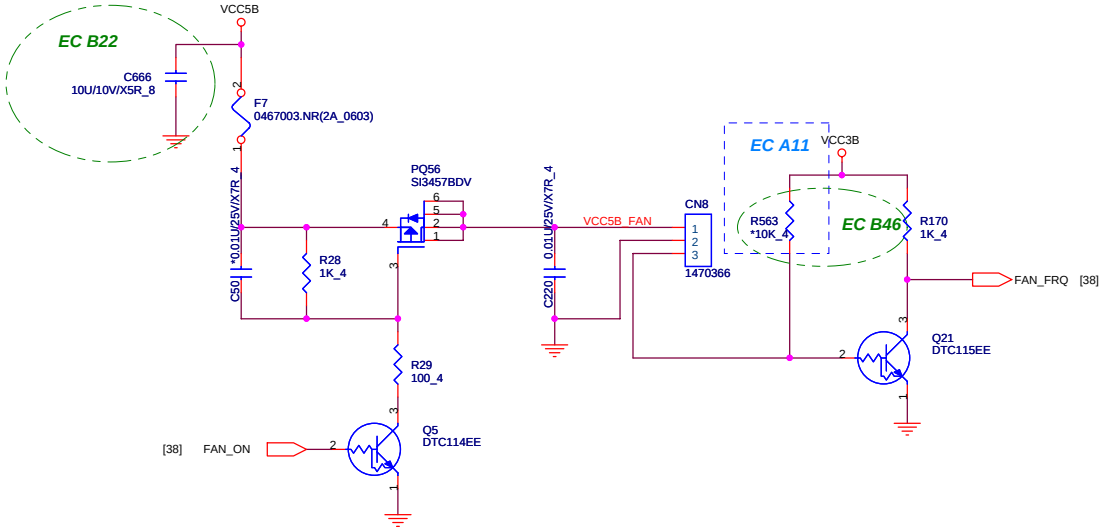

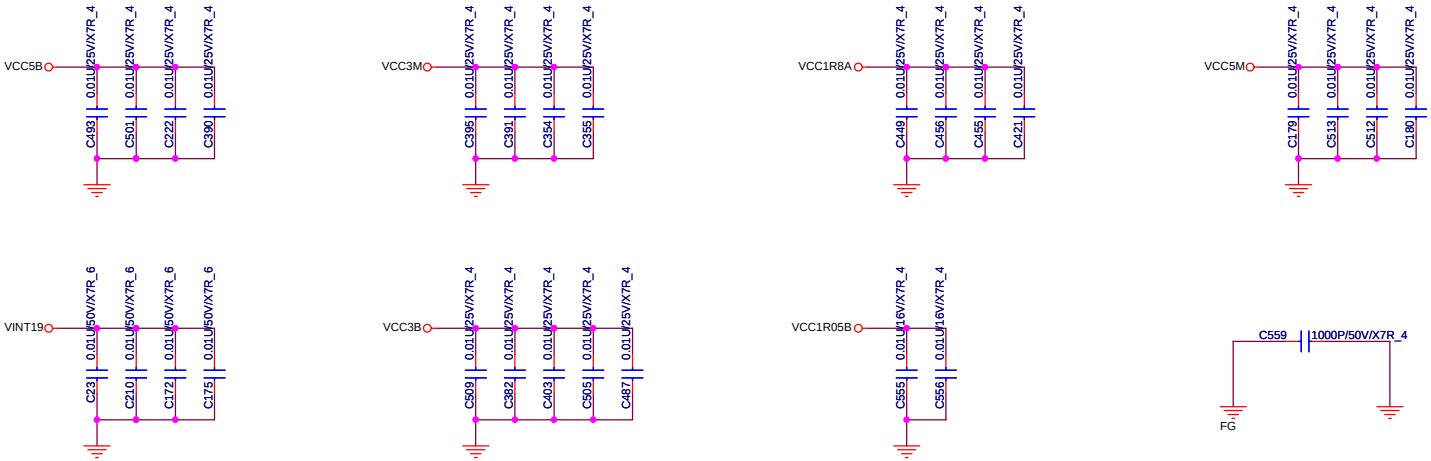

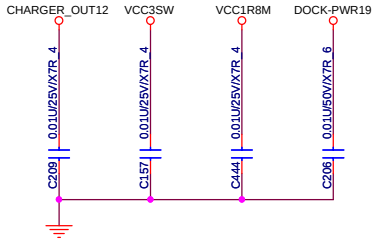

PROJECT : BV1

Quanta Computer Inc.

Size	Document Number	Rev
Custom	FAN Control_EMC	3C

Date: Thursday, October 06, 2005 Sheet 48 of 73

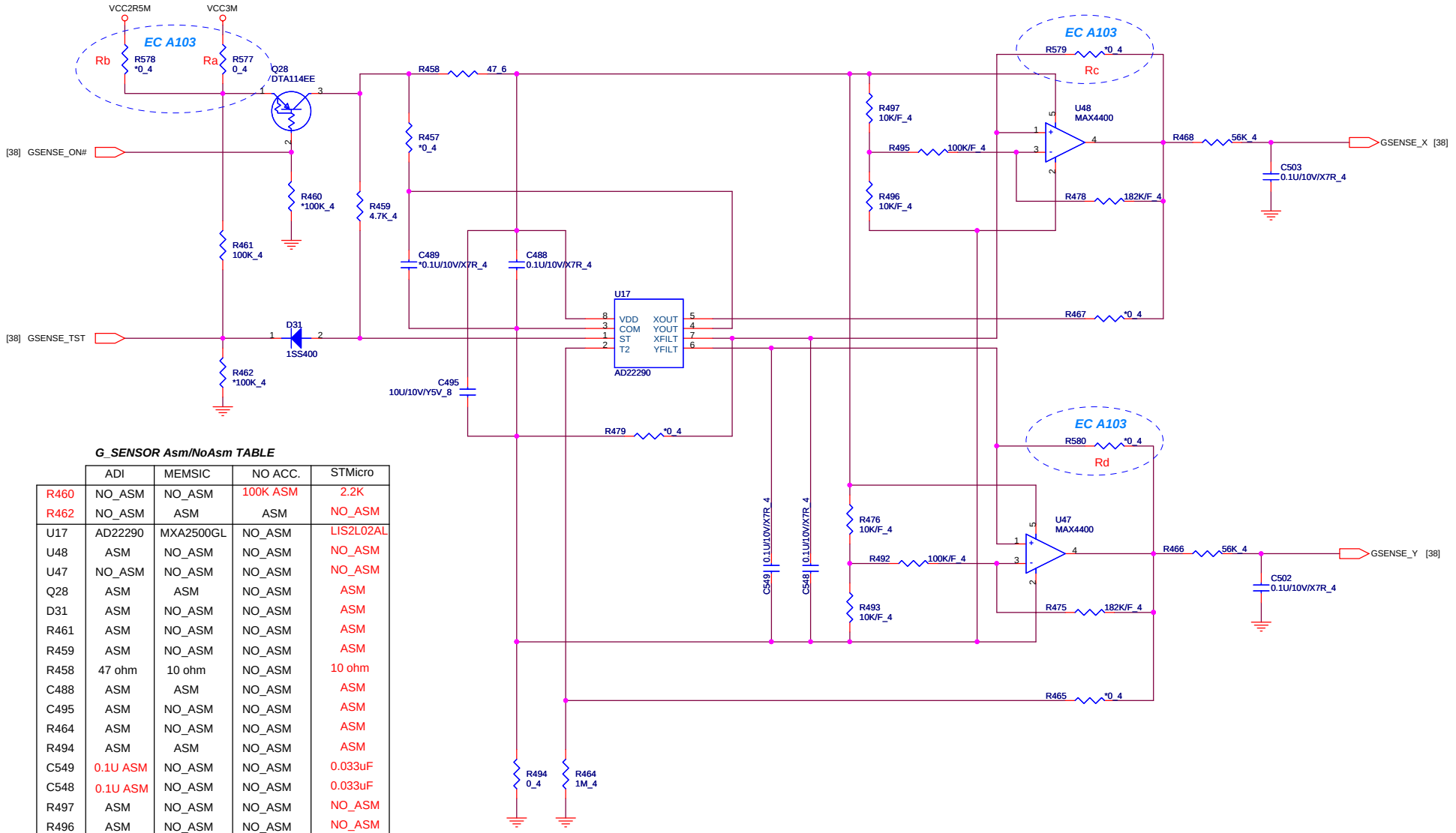

G_SENSOR Asm/NoAsm TABLE

	ADI	MEMSIC	NO ACC.	STMicro
R460	NO_ASM	NO_ASM	100K ASM	2.2K
R462	NO_ASM	ASM	ASM	NO_ASM
U17	AD22290	MXA2500GL	NO_ASM	LIS2L02AL
U48	ASM	NO_ASM	NO_ASM	NO_ASM
U47	NO_ASM	NO_ASM	NO_ASM	NO_ASM
Q28	ASM	ASM	NO_ASM	ASM
D31	ASM	NO_ASM	NO_ASM	ASM
R461	ASM	NO_ASM	NO_ASM	ASM
R459	ASM	NO_ASM	NO_ASM	ASM
R458	47 ohm	10 ohm	NO_ASM	10 ohm
C488	ASM	ASM	NO_ASM	ASM
C495	ASM	NO_ASM	NO_ASM	ASM
R464	ASM	NO_ASM	NO_ASM	ASM
R494	ASM	ASM	NO_ASM	ASM
C549	0.1U ASM	NO_ASM	NO_ASM	0.033uF
C548	0.1U ASM	NO_ASM	NO_ASM	0.033uF
R497	ASM	NO_ASM	NO_ASM	NO_ASM
R496	ASM	NO_ASM	NO_ASM	NO_ASM
R495	ASM	NO_ASM	NO_ASM	NO_ASM
R478	ASM	NO_ASM	NO_ASM	NO_ASM
R476	ASM	NO_ASM	NO_ASM	NO_ASM
R493	ASM	NO_ASM	NO_ASM	NO_ASM
R492	ASM	NO_ASM	NO_ASM	NO_ASM
R475	ASM	NO_ASM	NO_ASM	NO_ASM
R468	56K	8.2K	NO_ASM	56K
C503	ASM	ASM	NO_ASM	ASM
R466	56K	8.2K	NO_ASM	56K
C502	ASM	ASM	NO_ASM	ASM
R457	NO_ASM	ASM	NO_ASM	NO_ASM
C489	NO_ASM	ASM	NO_ASM	NO_ASM
R479	NO_ASM	ASM	NO_ASM	NO_ASM
R467	NO_ASM	ASM	NO_ASM	NO_ASM
R465	NO_ASM	ASM	NO_ASM	NO_ASM

EC B41

	ADI	MEMSIC	STMicro	NO ACC.
Ra	ASM	ASM	ASM	NO_ASM
Rb	NO_ASM	NO_ASM	NO_ASM	NO_ASM
Rc	NO_ASM	NO_ASM	ASM	NO_ASM
Rd	NO_ASM	NO_ASM	ASM	NO_ASM

PROJECT : BV1
Quanta Computer Inc.

Size	Document Number	Rev
Custom	G-Sensor	3C

Date: Thursday, October 06, 2005 Sheet 49 of 73

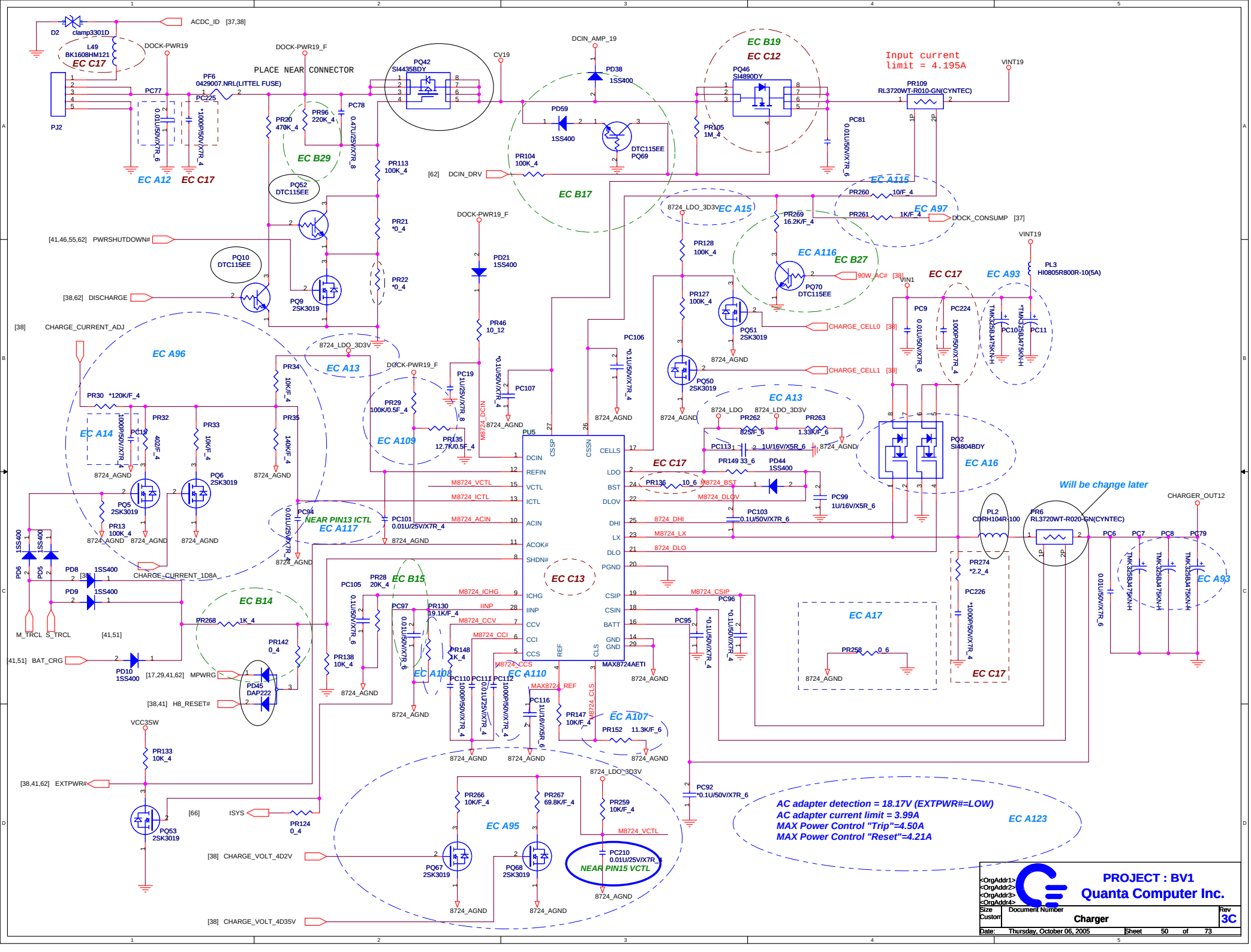
ACDC_ID [37,38]
D2 clamp3301D
L49 BK1608HM121
EC C17
DOCK-PWR19
PJ2
PC77
PC225
PF6 0429007.NRL(LITTEL FUSE)
PLACE NEAR CONNECTOR
DOCK-PWR19_F
PQ42 SI4435BDY
CV19
DCIN_AMP_19
PD38 1SS400
EC B19
EC C12
PQ46 SI4890DY
Input current limit = 4.195A
VINT19
PR109 RL3720WT-R010-GN(CYNTEC)
PC81
PR105 1M_4
PD59 1SS400
DTC115EE PQ69
PR104 100K_4
[62] DCIN_DRV
EC B17
EC A12
EC C17
PR20 470K_4
PR96 220K_4
PC78
EC B29
PQ52 DTC115EE
PR113 100K_4
EC A115
PR260 10/F_4
PR261 1K/F_4
EC A97
DOCK_CONSUMP [37]
8724_LDO_3D3V
EC A15
PR269 16.2K/F_4
[41,46,55,62] PWRSHUTDOWN#
PR21 *0_4
PR22 *0_4
PQ10 DTC115EE
PQ9 2SK3019
[38,62] DISCHARGE
PD21 1SS400
PR46 10_12
PR128 100K_4
EC A116
EC B27
PQ70 DTC115EE
90W_AC# [38]
VIN1
EC C17
EC A93
PL3 HI0805R800R-10(5A)
PR127 100K_4
PQ51 2SK3019
CHARGE_CELL0 [38]
PC9 0.01U/50V/X7R_6
PC224 1000P/50V/X7R_4
TMK325B475KN-H
PC10 PC11
[38] CHARGE_CURRENT_ADJ
EC A96
8724_LDO_3D3V
EC A13
PR34 10K/F_4
PR35 140K/F_4
PC19 1U/25V/X7R_8
PC107 0.1U/50V/X7R_4
PC106 0.1U/50V/X7R_4
PQ50 2SK3019
CHARGE_CELL1 [38]
PR30 *120K/F_4
PR32 402/F_4
PR33 10K/F_4
EC A14
PC18 1000P/50V/X7R_4
PQ5 2SK3019
PQ6 2SK3019
PR13 100K_4
PR29 100K/0.5F_4
EC A109
PR135 12.7K/0.5F_4
M8724_DCIN
PU5
MAX8724AETI
DCIN
REFIN
VCTL
ICTL
ACIN
ACOK#
SHDN#
ICHG
IINP
CCV
CCI
CCS
CSSP
CSSN
CELLS
LDO
BST
DLOV
DHI
LX
DLO
PGND
CSIP
CSIN
BATT
GND
REF
CLS
M8724_VCTL
M8724_ICTL
M8724_ACIN
M8724_ICHG
M8724_CCV
M8724_CCI
M8724_CCS
M8724_CSIP
M8724_BST
M8724_DLOV
8724_DHI
M8724_LX
8724_DLO
MAX8724_REF
M8724_CLS
8724_LDO
8724_LDO_3D3V
PR262 825/F_6
PR263 1.33K/F_6
PC113 1U/16V/X5R_6
PR149 33_6
PD44 1SS400
PR136 10_6
PC99 1U/16V/X5R_6
PC103 0.1U/50V/X7R_6
PQ2 SI4804BDY
EC A16
Will be change later
CHARGER_OUT12
PL2 CDRH104R-100
PR6 RL3720WT-R020-GN(CYNTEC)
PC6 PC7 PC8 PC79
EC A93
PR274 *2.2_4
PC226 *1000P/50V/X7R_4
EC C17
EC A17
PR258 0_6
8724_AGND
EC C13
NEAR PIN13 ICTL
EC A117
PC94 0.01U/25V/X7R_4
PC101 0.01U/25V/X7R_4
PD6 1SS400
PD5 1SS400
PD8 1SS400
PD9 1SS400
CHARGE_CURRENT_1D8A
M_TRCL S_TRCL [41,51]
EC B15
PC105 0.1U/50V/X7R_6
PR28 20K_4
PC97 0.01U/50V/X7R_6
PR130 19.1K/F_4
PR138 10K_4
EC B14
PR268 1K_4
PR142 0_4
[41,51] BAT_CRG
PD10 1SS400
[17,29,41,62] MPWRG
PD45 DAP222
[38,41] H8_RESET#
PR148 1K_4
EC A108
PC110 1000P/50V/X7R_4
PC111 0.01U/25V/X7R_4
PC112 1000P/50V/X7R_4
EC A110
PC116 1U/16V/X5R_6
PR147 10K/F_4
EC A107
PR152 11.3K/F_6
PC95 0.1U/50V/X7R_4
PC96 0.1U/50V/X7R_4
PC92 *0.1U/50V/X7R_6
VCC3SW
PR133 10K_4
[38,41,62] EXTPWR#
PQ53 2SK3019
[66] ISYS
PR124 0_4
EC A95
PR266 10K/F_4
PR267 69.8K/F_4
PR259 10K/F_4
PQ67 2SK3019
PQ68 2SK3019
[38] CHARGE_VOLT_4D2V
[38] CHARGE_VOLT_4D35V
PC210 0.01U/25V/X7R_4
NEAR PIN15 VCTL
AC adapter detection = 18.17V (EXTPWR#=LOW)
AC adapter current limit = 3.99A
MAX Power Control "Trip"=4.50A
MAX Power Control "Reset"=4.21A
EC A123
PROJECT : BV1
Quanta Computer Inc.
Size Custom
Document Number
Charger
Rev 3C
Date: Thursday, October 06, 2005
Sheet 50 of 73

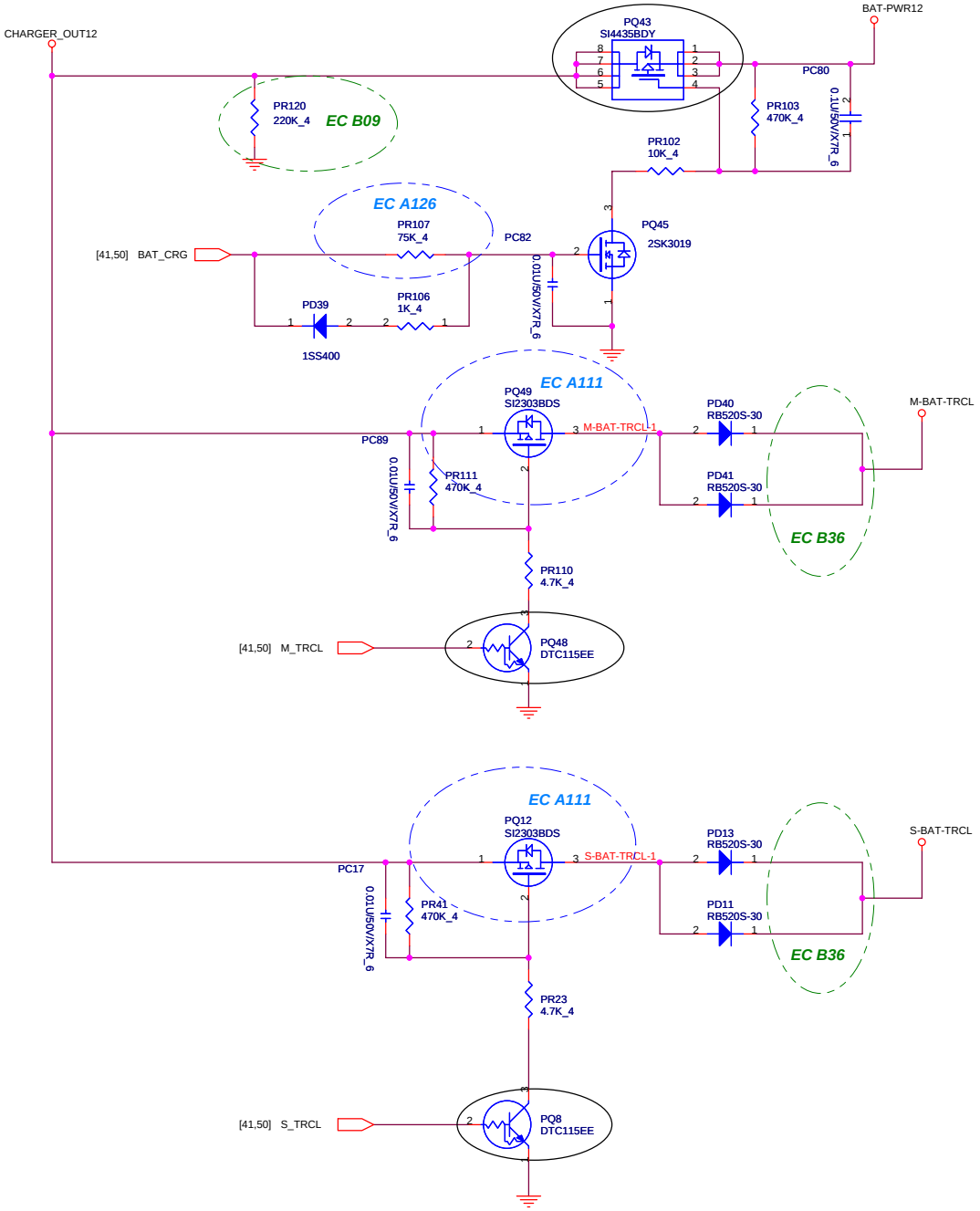

PROJECT : BV1

Quanta Computer Inc.

Size	Document Number	Rev
Custom	**Charger Selector**	3C

Date: Thursday, October 06, 2005 Sheet 51 of 73

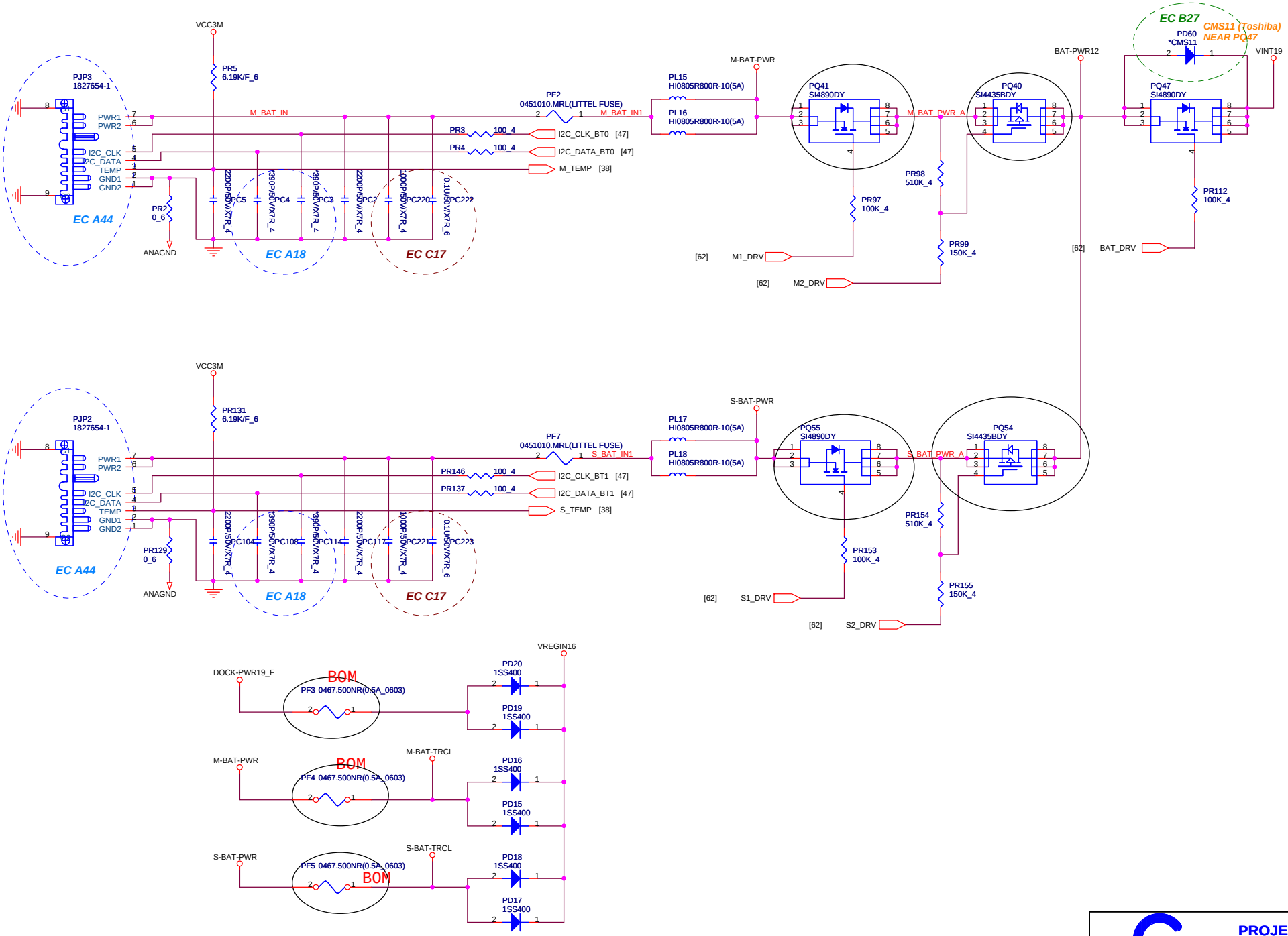

PROJECT : BV1

Quanta Computer Inc.

Size	Document Number	Rev
Custom	Battery Input	3C

Date: Thursday, October 06, 2005 Sheet 52 of 73

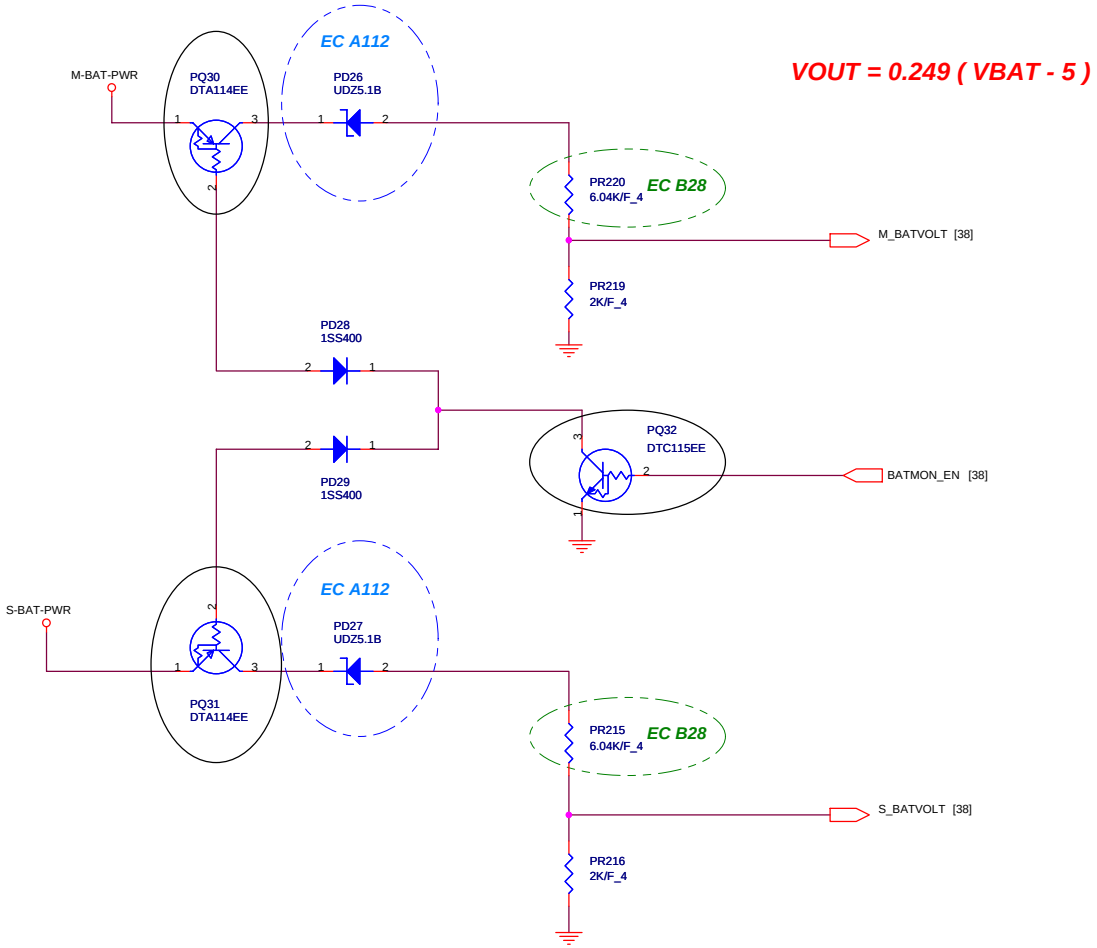

PROJECT : BV1

Quanta Computer Inc.

Size	Document Number	Rev
Custom	Battery Monitor	3C

Date: Thursday, October 06, 2005 Sheet 53 of 73

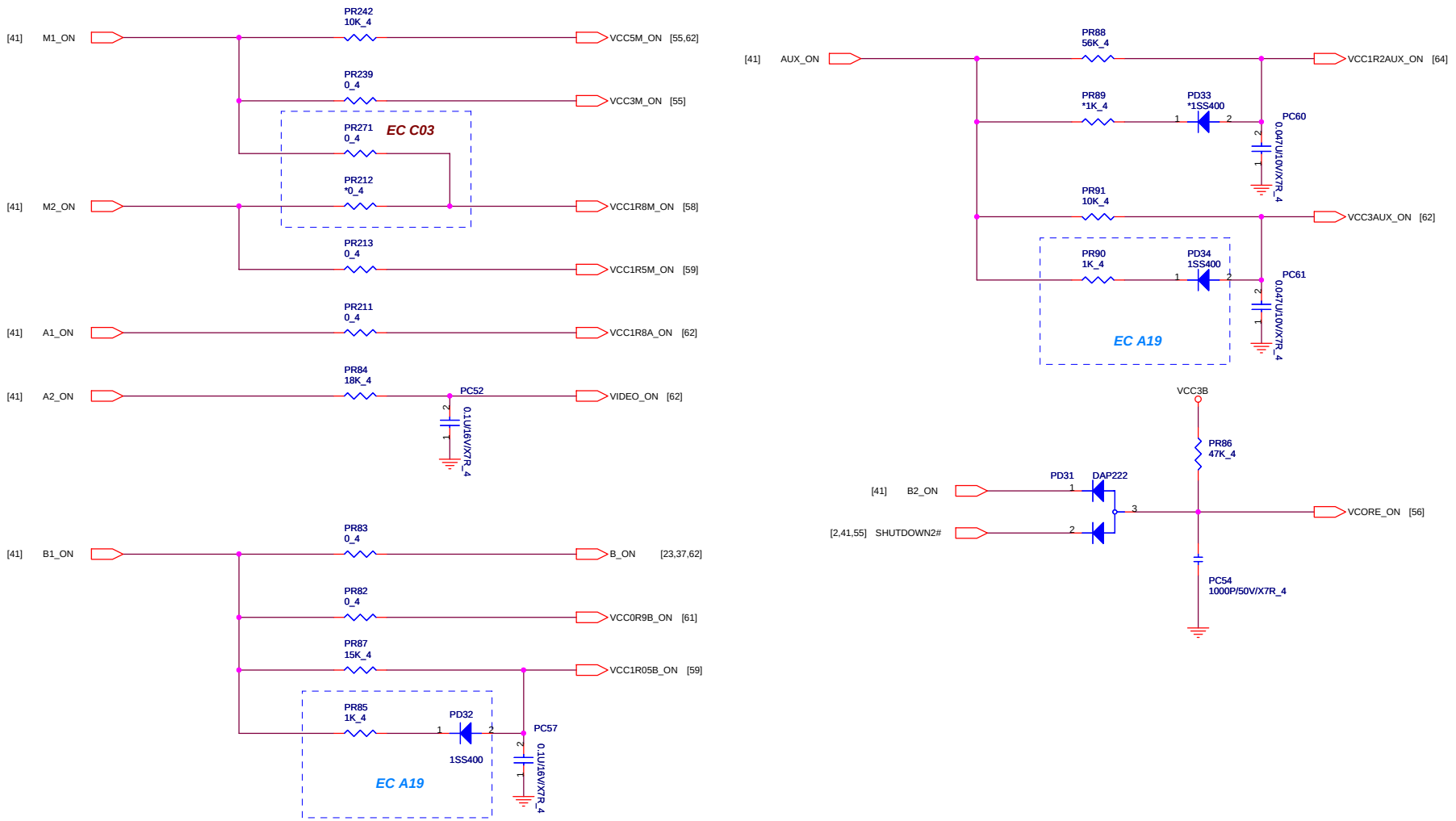

PROJECT : BV1

Quanta Computer Inc.

Size	Document Number	Rev
Custom	Power Sequence	3C

Date: Thursday, October 06, 2005 Sheet 54 of 73

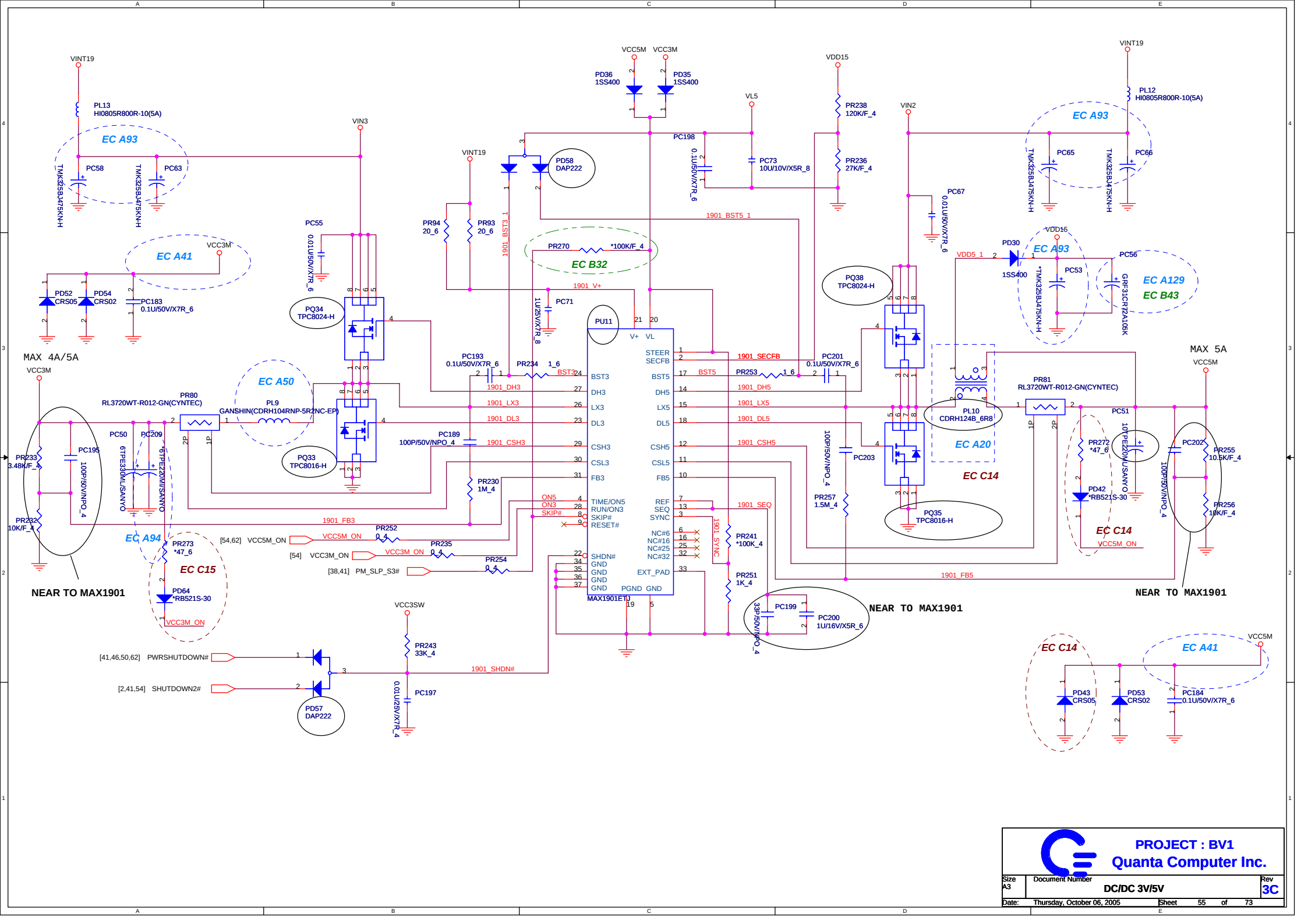

PROJECT : BV1
Quanta Computer Inc.

Size	Document Number	Rev
A3	DC/DC 3V/5V	3C

Date: Thursday, October 06, 2005 Sheet 55 of 73

Intel spec. : Vos% = 1.2%
PR103/(PR102+PR103)=1.21K/(100K+1.21K) ~ 1.2%
PR105 : 200K Ohms ------> Fsw ~ 300K HZ

PWRCH : "H" -----> Two phase
PWRCH : "L" -----> Single phase

	DSEN#	DRSEN
Active	H	L
Deep	L	L
Deeper	L	H

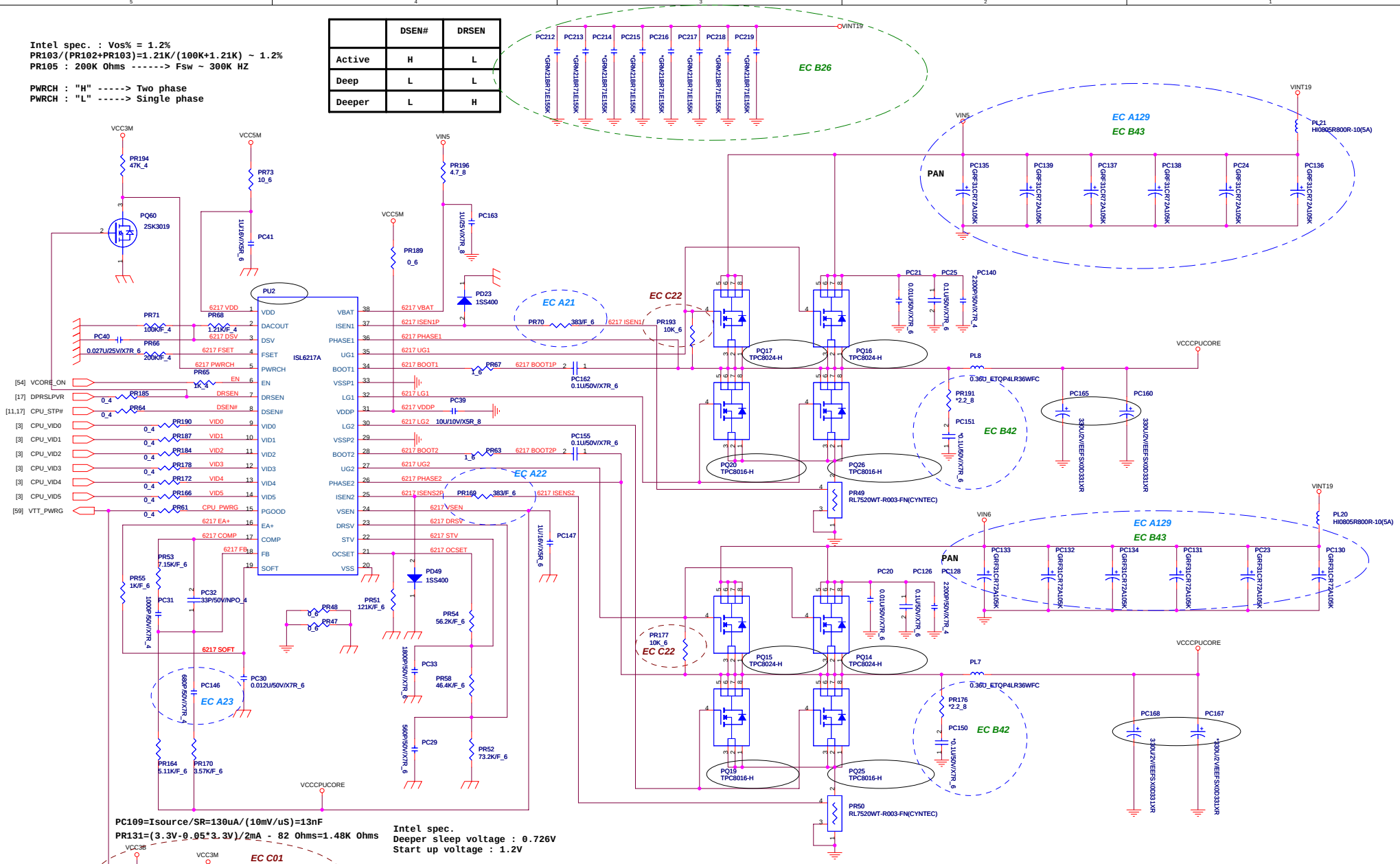

PC109=Isource/SR=130uA/(10mV/uS)=13nF
PR131=(3.3V-0.05*3.3V)/2mA - 82 Ohms=1.48K Ohms

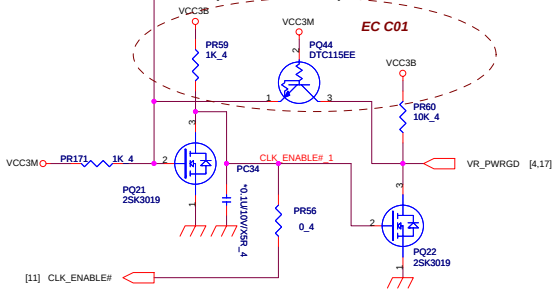

Intel spec.
Deeper sleep voltage : 0.726V
Start up voltage : 1.2V

Vocset=1.75V
Deeper sleep vol.=1.75V*PR129/(PR124+PR126+PR129)=0.749V
Start up
voltage=1.75V*(PR126+PR129)/(PR124+PR126+PR129)=1.2V

If full load is 25A ; Vdroop=75mV ; Idroop = 75mV/PR107=75uA
Isen=(75uA/0.5/0.875)/2=85.71uA
85.71uA*(Rsen+0.11K)=(25A/2)*3m Ohms
Rsen=327.5 ~ 324 Ohms ---------->PR104 , PR118

If Ioc is 32A
Isen=(32A/2)*3m/(0.324K+0.11K)=110.6uA
Iocset=(110.6uA*2)*0.875 / 8 = 24.2uA
Rocset=1.75V/24.2uA=72.3K

Rocset=PR122//(PR124+PR126+PR129)
72.3K=PR122//175.2K
PR122 ~ 121K

Set VID voltage

VID						OUTPUT
VID_5	VID_4	VID_3	VID_2	VID_1	VID_0	VOLTAGE
0	1	0	1	1	0	1.356
0	1	0	1	1	1	1.340
0	1	1	0	0	0	1.324
0	1	1	0	0	1	1.308
0	1	1	0	1	0	1.292
0	1	1	0	1	1	1.276

PROJECT : BV1
Quanta Computer Inc.

Size	Document Number	Rev
Custom	CPU POWER	3C

Date: Thursday, October 06, 2005 Sheet 56 of 73

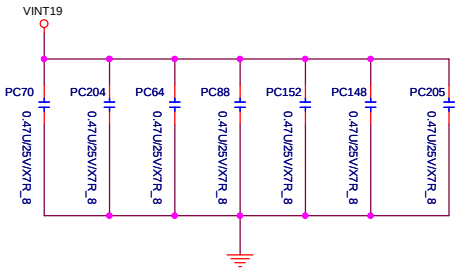

PROJECT : BV1

Quanta Computer Inc.

Size	Document Number	Rev
Custom	VCORE_INPUT CAP	3C

Date: Thursday, October 06, 2005 Sheet 57 of 73

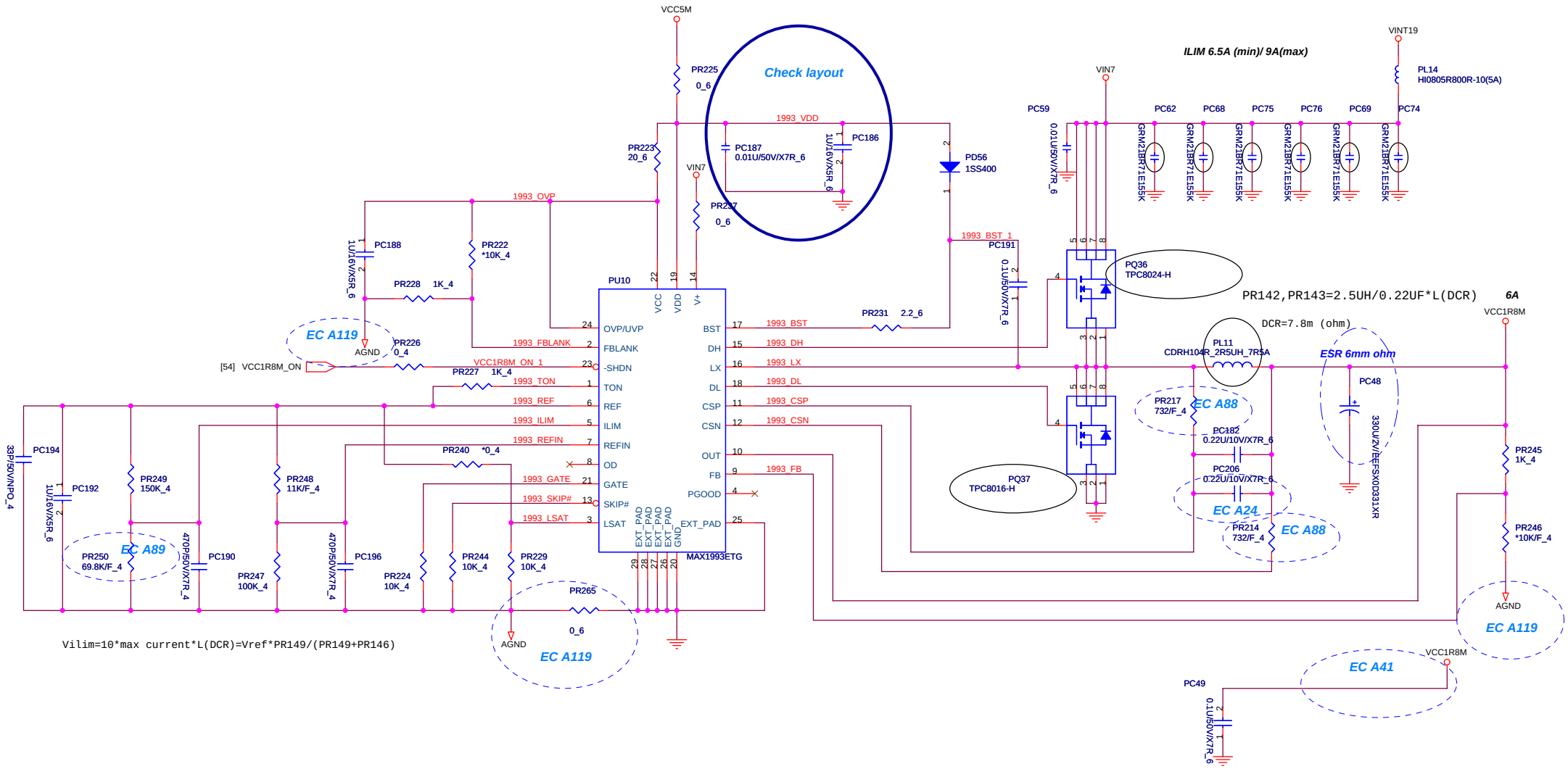

PROJECT : BV1

Quanta Computer Inc.

Size	Document Number	Rev
A3	MAX1993 1.8V	3C

Date: Thursday, October 06, 2005 Sheet 58 of 73

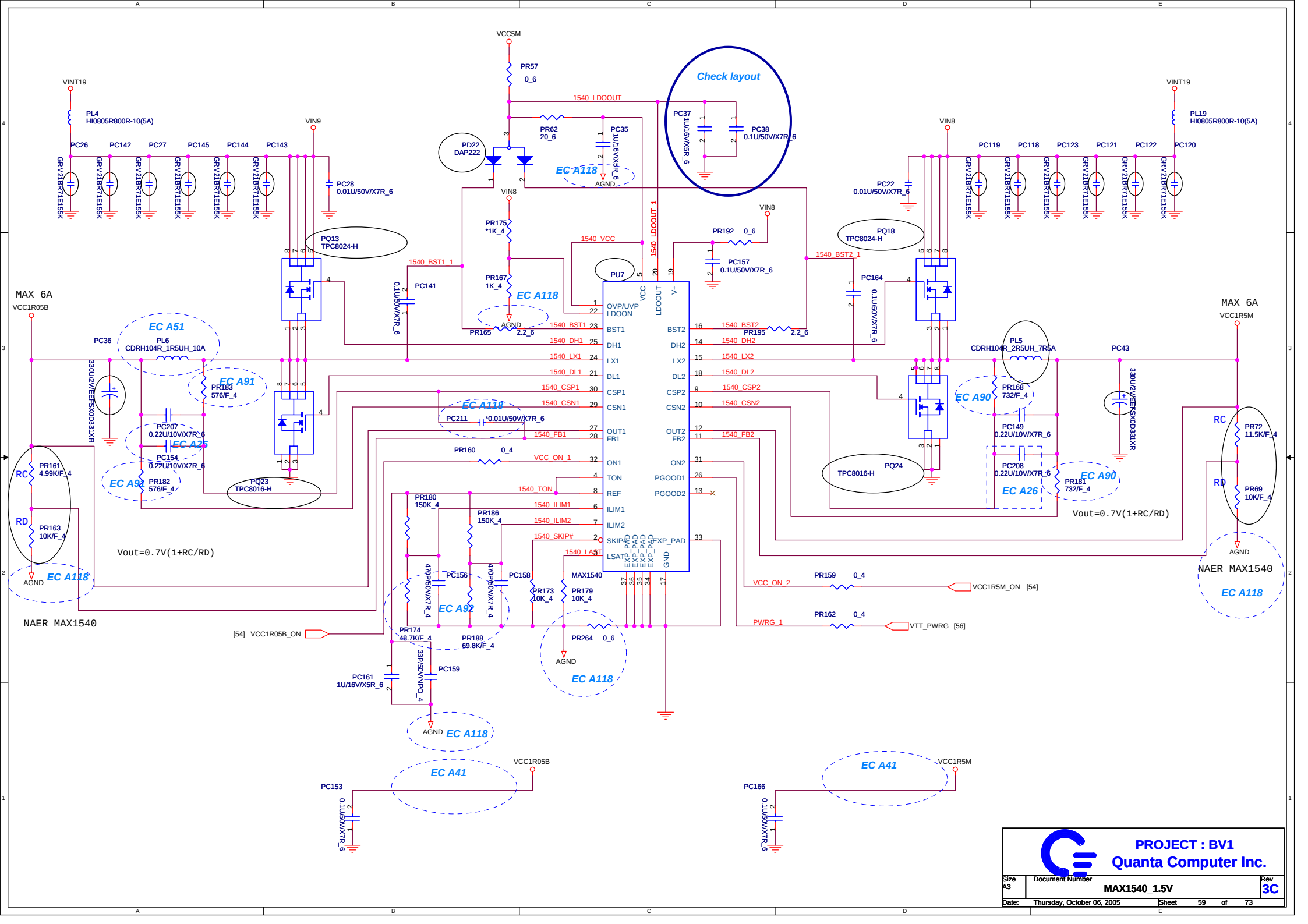

PROJECT : BV1

Quanta Computer Inc.

Size	Document Number	Rev
A3	MAX1540_1.5V	3C

Date: Thursday, October 06, 2005 Sheet 59 of 73

BLANK PAGE

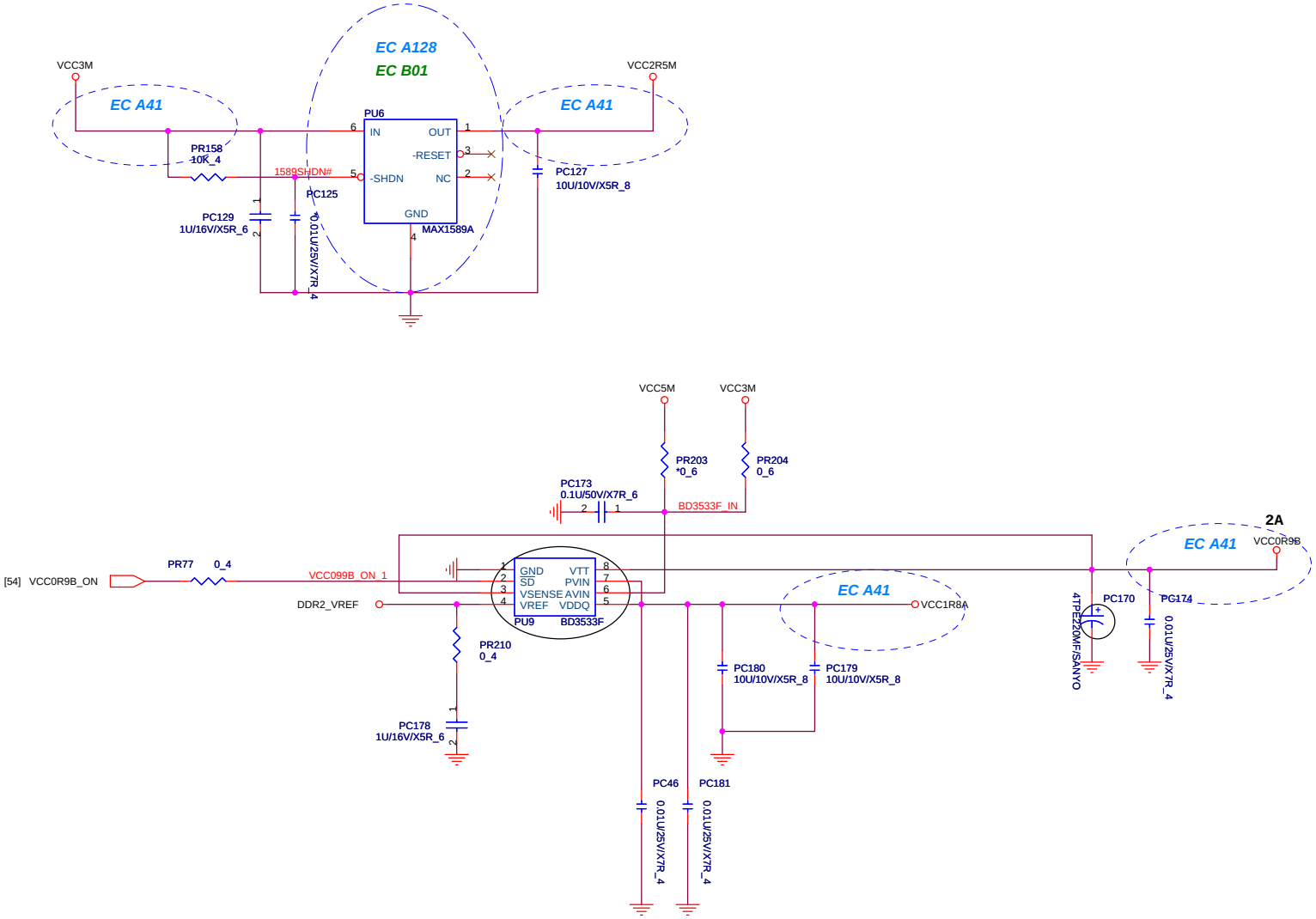

PROJECT : BV1 Quanta Computer Inc.		
Size A3	Document Number VCC2R5M/VCC0R9B	Rev 3C
Date: Thursday, October 06, 2005	Sheet 61 of 73	

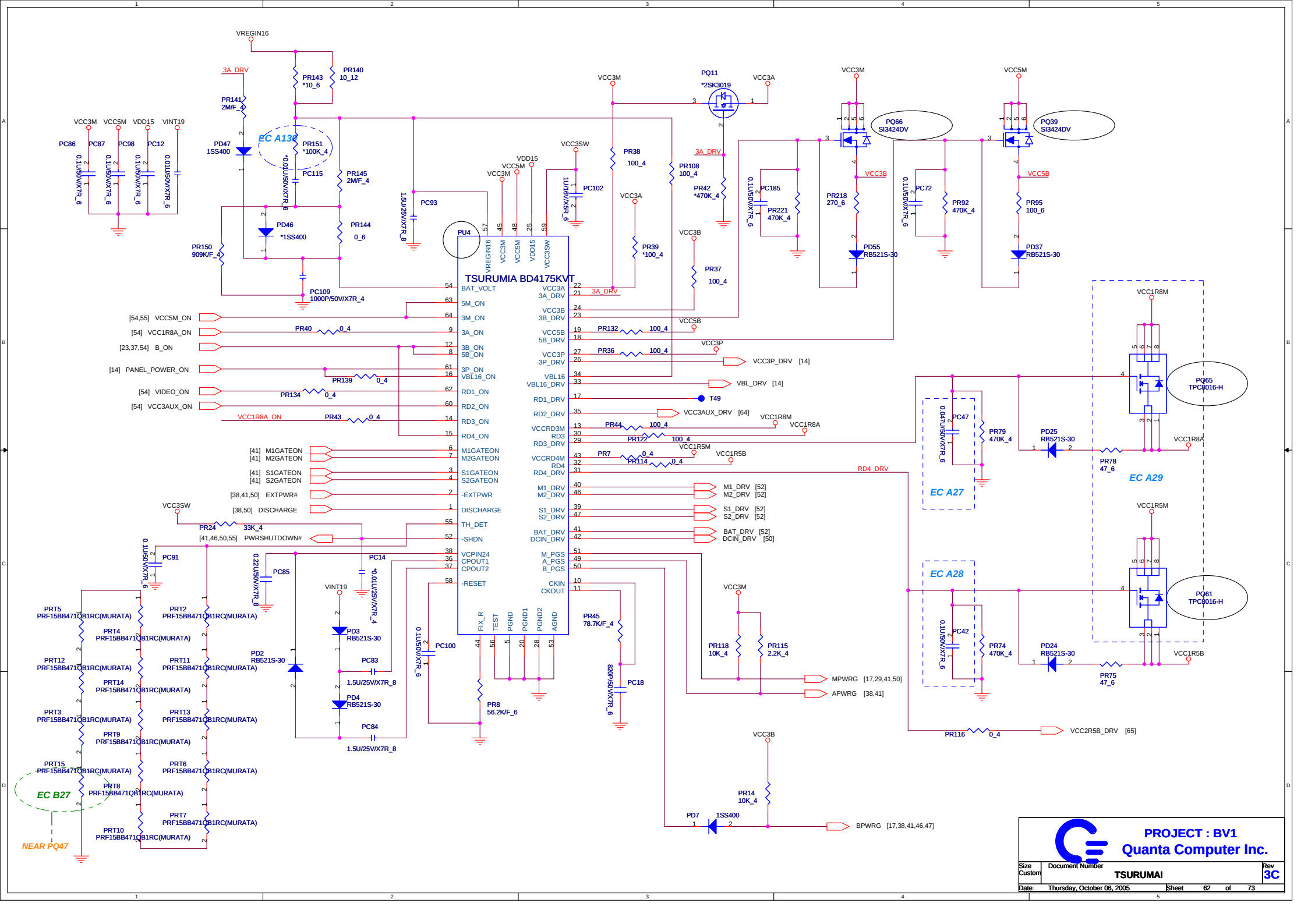
TSURUMIA BD4175KVT
PU4
VREGIN16
3A_DRV
PR143 *10_6
PR140 10_12
PR141 2M/F_4
PD47 1SS400
EC A136
PR151 *100K_4
PC115
PR145 2M/F_4
PR144 0_6
PD46 *1SS400
PR150 909K/F_4
PC109 1000P/50V/X7R_4
PC93
1.5U/25V/X7R_8
VCC3M VCC5M VDD15 VINT19
PC86 PC87 PC98 PC12
0.1U/50V/X7R_6
0.01U/50V/X7R_6
VCC3SW
PC102
1U/16V/X5R_6
PR38 100_4
PR108 100_4
PR42 *470K_4
PR39 *100_4
PR37 100_4
PQ11 *2SK3019
VCC3A
VCC3B
PC185
PR221 470K_4
PR218 270_6
PD55 RB521S-30
PQ66 SI3424DV
PC72
PR92 470K_4
PR95 100_6
PD37 RB521S-30
PQ39 SI3424DV
VCC5B
VCC3P
[54,55] VCC5M_ON
[54] VCC1R8A_ON
[23,37,54] B_ON
[14] PANEL_POWER_ON
[54] VIDEO_ON
[54] VCC3AUX_ON
VCC1R8A_ON
PR40 0_4
PR139 0_4
PR134 0_4
PR43 0_4
PR132 100_4
PR36 100_4
VCC3P_DRV [14]
VBL_DRV [14]
T49
VCC3AUX_DRV [64]
PR44 100_4
PR122 100_4
PR7 0_4
PR114 0_4
VCC1R8M
VCC1R8A
VCC1R5M
VCC1R5B
RD4_DRV
[41] M1GATEON
[41] M2GATEON
[41] S1GATEON
[41] S2GATEON
[38,41,50] EXTPWR#
[38,50] DISCHARGE
[41,46,50,55] PWRSHUTDOWN#
PR24 33K_4
PC91
0.1U/50V/X7R_6
0.22U/50V/X7R_8
PC85
PC14
*0.01U/25V/X7R_4
VINT19
PD3 RB521S-30
PD2 RB521S-30
PC83
1.5U/25V/X7R_8
PD4 RB521S-30
PC84
1.5U/25V/X7R_8
PC100
PR8 56.2K/F_6
PR45 78.7K/F_4
8200/50V/X7R_6
PC18
M1_DRV [52]
M2_DRV [52]
S1_DRV [52]
S2_DRV [52]
BAT_DRV [52]
DCIN_DRV [50]
MPWRG [17,29,41,50]
APWRG [38,41]
PR118 10K_4
PR115 2.2K_4
PR14 10K_4
PD7 1SS400
BPWRG [17,38,41,46,47]
PR116 0_4
VCC2R5B_DRV [65]
PC47
0.47U/50V/X7R_6
PR79 470K_4
PD25 RB521S-30
PR78 47_6
EC A27
EC A29
PQ65 TPC8016-H
PC42
PR74 470K_4
PD24 RB521S-30
PR75 47_6
EC A28
PQ61 TPC8016-H
PRT5 PRF15BB471QB1RC(MURATA)
PRT2 PRF15BB471QB1RC(MURATA)
PRT4 PRF15BB471QB1RC(MURATA)
PRT12 PRF15BB471QB1RC(MURATA)
PRT11 PRF15BB471QB1RC(MURATA)
PRT14 PRF15BB471QB1RC(MURATA)
PRT3 PRF15BB471QB1RC(MURATA)
PRT13 PRF15BB471QB1RC(MURATA)
PRT9 PRF15BB471QB1RC(MURATA)
PRT15 PRF15BB471QB1RC(MURATA)
PRT6 PRF15BB471QB1RC(MURATA)
PRT8 PRF15BB471QB1RC(MURATA)
PRT7 PRF15BB471QB1RC(MURATA)
PRT10 PRF15BB471QB1RC(MURATA)
EC B27
NEAR PQ47
PROJECT : BV1
Quanta Computer Inc.
Size Custom
Document Number TSURUMAI
Rev 3C
Date: Thursday, October 06, 2005
Sheet 62 of 73

BLANK PAGE

PROJECT : BV1
Quanta Computer Inc.

Size	Document Number	Rev
A4	LOAD SW_VIDEO	3C

Date: Thursday, October 06, 2005 Sheet 63 of 73

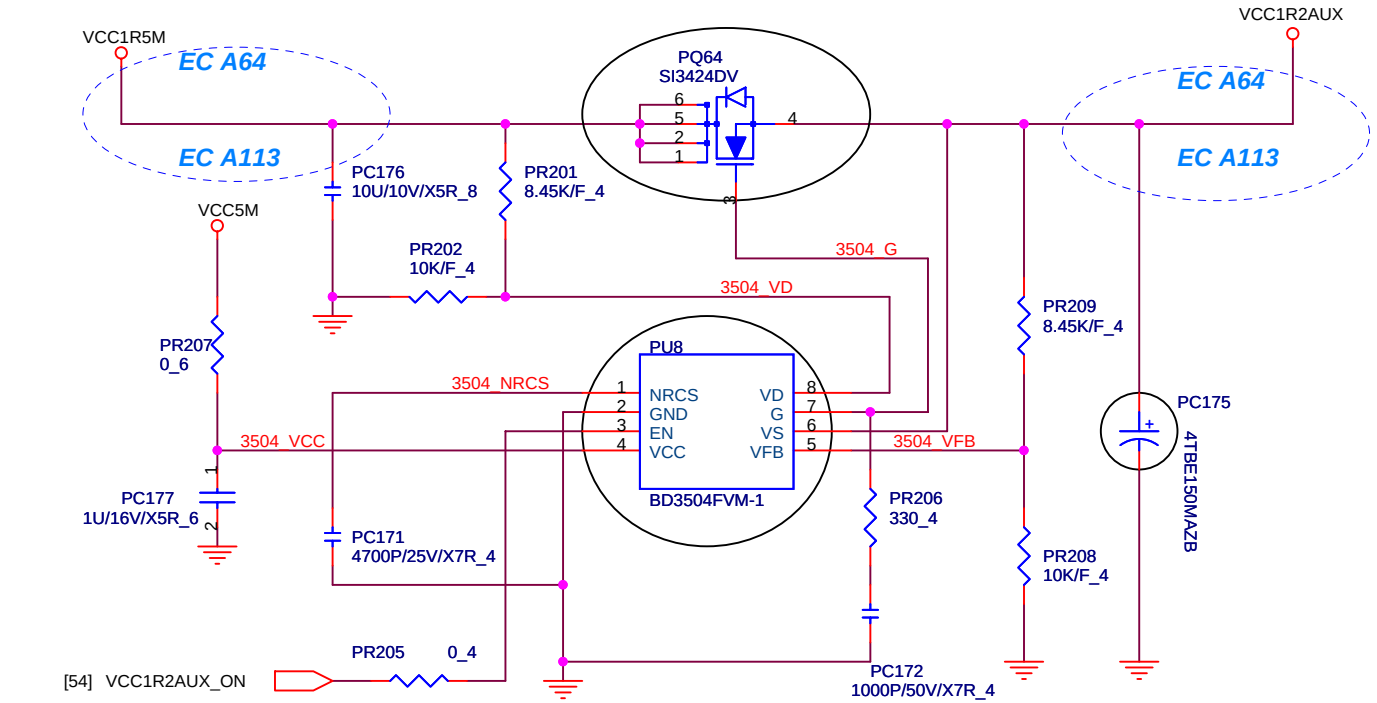

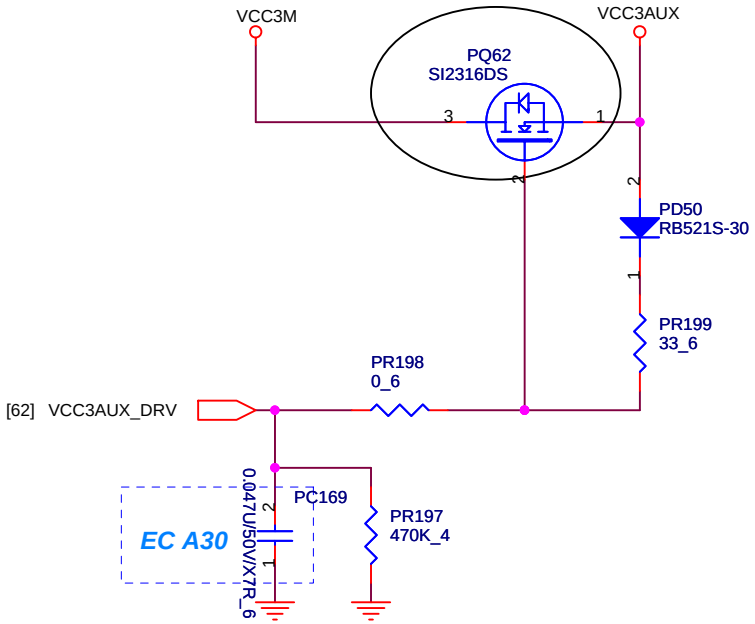

PROJECT : BV1

Quanta Computer Inc.

Size	Document Number	Rev
A4	LOAD SW_AUX	3C

Date: Thursday, October 06, 2005 Sheet 64 of 73

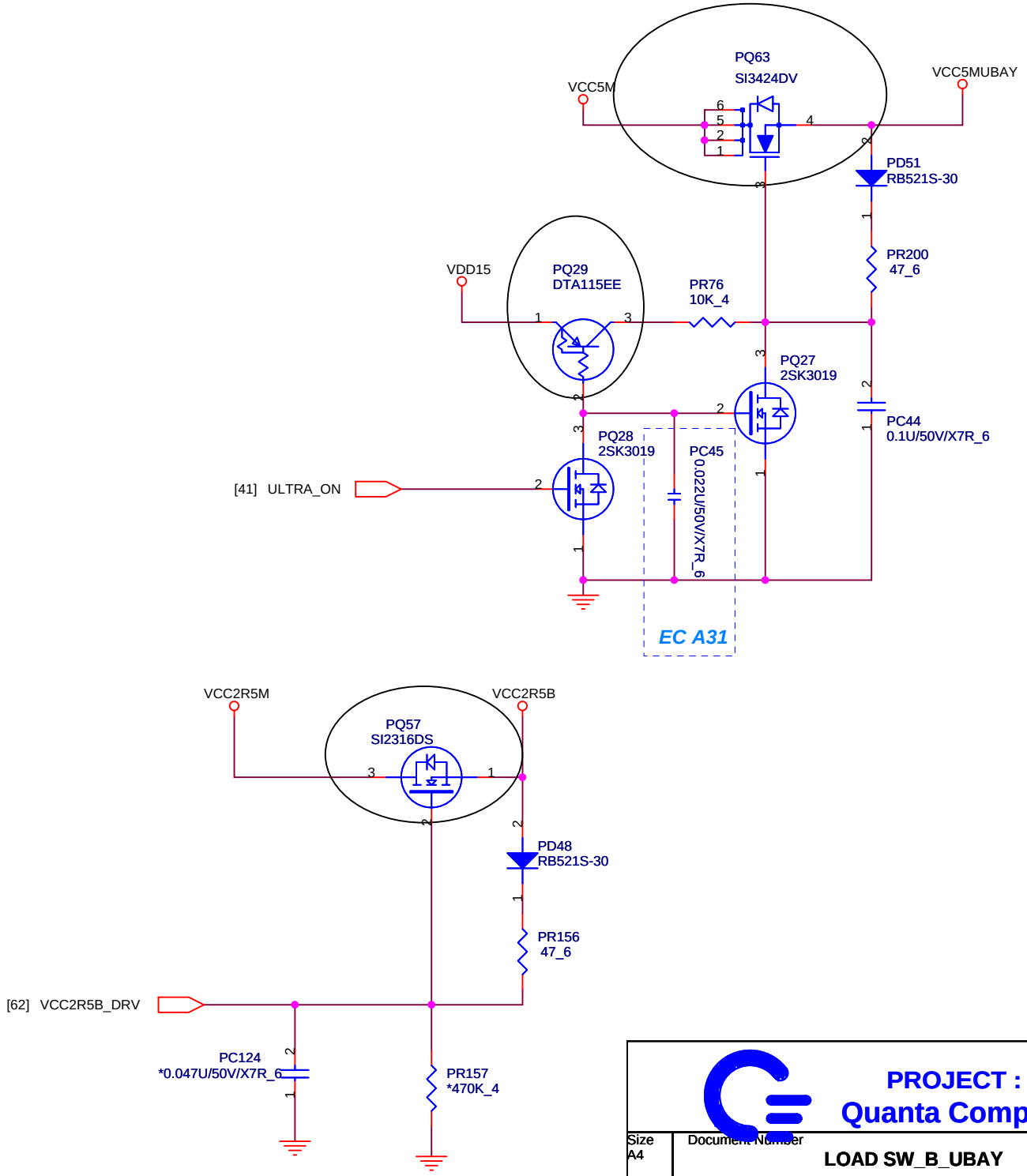

PROJECT : BV1

Quanta Computer Inc.

Size	Document Number	Rev
A4	LOAD SW_B_UBAY	3C

Date: Thursday, October 06, 2005 Sheet 65 of 73

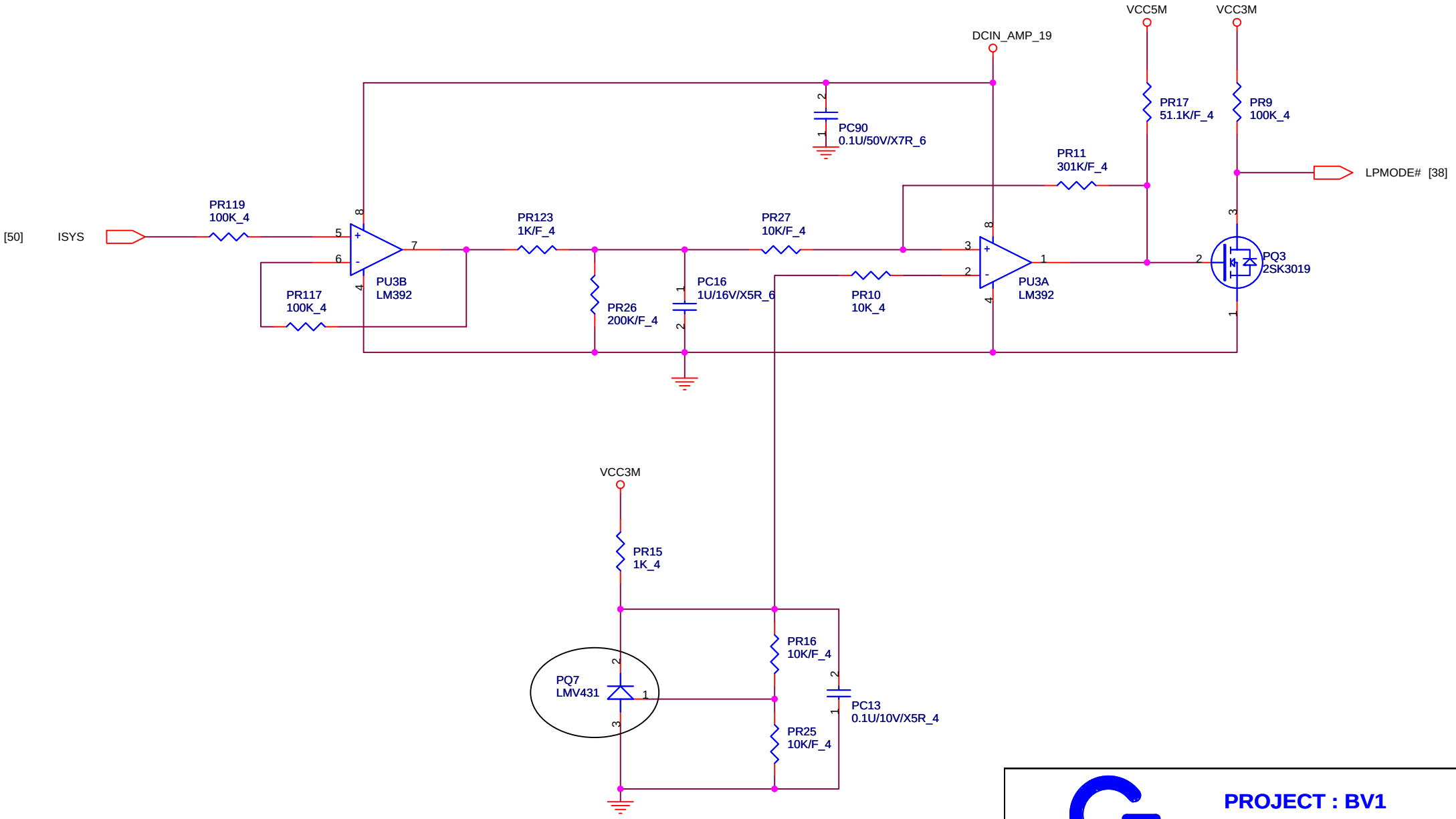

PROJECT : BV1

Quanta Computer Inc.

Size	Document Number	Rev
A4	MAX POWER CTRL	3C

Date: Thursday, October 06, 2005 Sheet 66 of 73

SCREW HOLE

MDC SCREW HOLE

HOLE10
H-C236D134I210P2

HOLE6
H-C236D134I210P2

LCD SCREW HOLE

HOLE5
*H-C260D102P2

HOLE4
*H-C260D102P2

CPU SCREW HOLE

HOLE17
H-TC252BS276D134P2

HOLE13
H-TC252BS276D134P2

HOLE12
H-TC252BS276D134P2

HOLE15
H-TC252BS276D134P2

PCMCIA SCREW HOLE

HOLE23
H-C236D134I174P2

M/B SCREW HOLE

HOLE22
*h-tc236br354x295d102p2

HOLE11
*h-tc236br335x295d102p2

HOLE14
*H-T236B276X354D102P2

HOLE19
*h-tc236br354x295d102p2

HOLE2
*h-tc276br295x315d102p2

HOLE8
*H-C236D102P2

HOLE21
*h-tc236br354x295d102p2

HOLE3
*H-C236D102P2

HOLE18
*h-tc196br354x285d102p2
LAN_GND

MINI PCI-E LATCH SCREW HOLE

HOLE16
H-C236D134I174P2

HOLE20
H-C236D134I174P2

HOLE7
H-C236D134I174P2

HOLE9
h-tc236br315x295d134I174p2

EMI SPRINGS

PAD2
*EMIPAD118X177

PAD3
*EMIPAD118X177

PAD4
*EMIPAD118X177

PAD5
*EMIPAD118X177

PAD6
*EMIPAD118X177

PAD7
*EMIPAD118X177

PAD14
*EMIPAD118X177

PAD15
*EMIPAD118X177

PAD21
*EMIPAD118X177

PAD24
*EMIPAD118X177

PAD30
*EMIPAD118X177

PAD31
*EMIPAD118X177

PAD32
*EMIPAD118X177

PAD33
*EMIPAD118X177

PAD34
*EMIPAD118X177

PAD35
*EMIPAD118X177

PAD36
*EMIPAD118X177

PAD16
EMIPAD118X177

PAD20
EMIPAD118X177

PAD22
EMIPAD118X177

PAD23
EMIPAD118X177

PAD25
EMIPAD118X177

PAD26
EMIPAD118X177

PAD27
EMIPAD118X177

PAD28
EMIPAD118X177

PAD29
EMIPAD118X177

PAD37
*EMIPAD118X177

Revision History

Revision	Date	Phase	Change List	Release Schematic Date	Release Gerber File Date
1A	12/28 2004	DV	Initial release	12/28 2004	12/28 2004
2A	02/28 2005	SIV	See page 69 Record A-1 (EC A01 - EC A52) See page 70 Record A-2 (EC A53 - EC A106) See page 71 Record A-3 (EC A107 - EC A130)	03/07 2005	03/07 2005
3A	04/19 2005	SIT	See page 72 Record B-1 (EC B01 - EC B48)	05/09 2005	05/11 2005
3B	06/28 2005	SVT1	See page 73 Record C-1 (EC C01 - EC C23)		
3C	08/02 2005	SVT2	See page 73 Record C-1 (EC C24 - EC C27)	02/08 2005	03/08 2005

Schematic Value Explanation Description :

RESISTOR

Value	F	4	6	8	12	1210	*	Description
*1K/F_4	1%	0402 (1005)					NOASM	1K ohm 1% SMD 0402 package and NOASM
1K_6	5%		0603 (1608)				ASM	1K ohm 5% SMD 0603 package and ASM
1K_8	5%			0805 (2125)			ASM	1K ohm 5% SMD 0805 package and ASM
1K_12	5%				1206 (3216)		ASM	1K ohm 5% SMD 1206 package and ASM
1K_1210	5%					1210 (3225)	ASM	1K ohm 5% SMD 1210 package and ASM

CAPACITOR

Value	Voltage	Material	6				*	Description
*0.1U/10V/X5R_4	10V	X5R	0402 (1005)				NOASM	0.1UF 10V X5R SMD 0402 package NOASM
1U/25V/X7R_6	25V	X7R	0603 (1608)				ASM	0.1UF 25V X7R SMD 0603 package ASM

BV1 / M-Note Schematic EC Tracking Record A (for DV --> SIV) Dec. 28, 2004
EC #/Page/Description/Part Affected/CMVC #

EC A01/04/ Change R268,R267 from NO ASM to ASM 40.2 ohm 1% because the SMVREF[1:0] voltage will droop below specification 200uA (Intel plan fix in C1 stepping).
EC A02/11/ Add RP11 33ohm 4P2R resistor to ASM , the reason is for MINI-PCIE clock use.
EC A03/16/ Change Y6 32.768Khz crystal pin definition because it's different with layout footprint.
EC A04/19/ Change R21 from 180k to 20k ohm and C45 from 0.1uF to 1uF. This recommendation change is being made in order to reduce the likelihood of glitching on RTCRST#.
EC A05/28/ Change SD connector type to 2WX11101-1X-7F.
EC A06/29/ Change R404,R406 from ASM to NO ASM. Because pull high resistor was double used on Page 29 and Page 62,41.
EC A07/32/ Change Y5 25Mhz crystal pin definition because it's different with layout footprint.
EC A08/38/ Change R84,R95,R94,R454,R85 to NO ASM. Because these resistors was double side pull high.
EC A09/46/ Change U16 MAX1989 thermal sensor pin5,6 from capacitor to 0 ohm resistor between the two pins. Because if DXP,DXN not use must short of them.
EC A10/46/ Change Q23,Q24 transistor pin definition because it's different with layout footprint.
EC A11/48/ Add a 10k ohm pull high resistor to VCC3B for Q21 base driver and ASM.
EC A12/50/ Change PC77 from 0.1uF/50V/X7R to 0.01uF/50V/X7R.
EC A13/50/ Make "8724_LDO_3D3V" by using pin_LDO and change PU5 pin12 REFIN power plane from VCC3M to 8724_LDO_3D3V.
EC A14/50/ Change PC15 from NO ASM to ASM 1000P/50V/X7R.
EC A15/50/ Change PU5 pin17 CELLS pull high power plane from VCC3M to 8724_LDO_3D3V. (SIV-IBM-48)
EC A16/50/ Change PQ2 MOSFET from SI4804BDY to SI4978BDY.
EC A17/50/ Add a 0 ohm resistor between the 8724_AGND and digital GND. Because PU5 MAX8724ETI ground was floating.
EC A18/52/ Change PC3,PC4,PC108,PC114 from ASM to NO ASM. The reason is battery smbus signal rising time is out of spec. Because the smbus clock frequency is redecued to 1/2 so the total communication time is twice. Also, Sanyo battery has a PEC error problem. CMVC# 65982 (SIV-IBM-12)
EC A19/54/ Change PR85,PD32 from NO ASM to ASM.
EC A20/55/ Change PL10 pin definition because it's different with layout footprint.
EC A21/56/ Change PR70 from 324 ohm 1% to 383 ohm 1%.
EC A22/56/ Change PR169 from 324 ohm 1% to 383 ohm 1%.
EC A23/56/ Change PC146 from 330pF/50V/X7R to 680pF/50V/X7R.
EC A24/58/ Add a 0.22uF/10V/X7R.
EC A25/59/ Add a 0.22uF/10V/X7R.
EC A26/59/ Add a 0.22uF/10V/X7R.
EC A27/62/ Change PC47 derating from 0.047uF/16V/X7R to 0.047uF/50V/X7R.
EC A28/62/ Change PC42 from 0.047uF/16V/X7R to 0.1uF/50V/X7R. Because VCC3B sequence must be early than VCC2R5B 0.7V DC level.
EC A29/62/ Change PQ65,PQ61 MOSFET from SI4890DY to TPC 8016-H MOSFET.
EC A30/64/ Change PC169 derating from 0.047uF/16V/X7R to 0.047uF/50V/X7R.
EC A31/65/ Change PC45 derating from 0.022uF/16V/X7R to 0.022uF/25V/X7R.
EC A32/37/ Add ACDC_ID signal from docking. CMVC# 65894 (SIV-IBM-01)
EC A33/38/ Change USB_ON and DOCK_USB_ON signal from pull high to pull down. (SIV-IBM-02)
EC A34/37/ Change pull high signal for DOCK_ATTACHED# from VCC3B to VCC5B. (SIV-IBM-05)
EC A35/31,37/ Change signal name to clarify from LAN_DOCK_ATTACHED# to LAN_DOCK_ATTACHED_AUX#. (SIV-IBM-06)
EC A36/15,37/ Change signal name to clarify from DOCK_ATTACHED# to DOCK_ATTACHED_5B#. (SIV-IBM-06)
EC A37/15/ Change VCCCRT power source. (SIV-IBM-07)
EC A38/37/ Add docking attach signal with pull-up to VCC3M to H8. (SIV-IBM-08)
EC A39/37/ Add 2 caps 0.1U and 4.7U at LAN_MAG_CTAP near docking connector. (SIV-IBM-09)
EC A40/17/ Change PlanarID [3..0] from 0000 to 0001. (SIV-IBM-11)
EC A41/55,58,59,61,64/ Delete solder jumpers of power pads. (SIV-IBM-13)
EC A42/38/ Delete dock_attach# pull high resistor 100K R96 and charge_current0 pull high R454.
EC A43/38/ Change signal name from "DOCK_ATTACH#" to "DOCK_ATTACHED_3M#".
EC A44/52/ Change main & second battery connector from 5pin to 7pin. (SIV-IBM-15)
EC A45/47/ Change SES AT8356908 SMBUS switch path for SW request.
EC A46/35/ Change C360,C346,C133,C134 the signal filter of modem from 470pf to 1000pf for EMI request.
EC A47/35/ Add bypass cap on RJ45_ACTIVITY_SYS# and RJ45_LINKUP_SYS# signal ,the value is 1000pf for EMI request.
EC A48/35/ Add two resister (0 ohm)to connect the Digital ground and LAN_GND for EMI request.
EC A49/34/ Change the power filter of LAN from 0 ohm to BLM18AG601SN1D for EMI request.
EC A50/55/ Change PL9 to GANSHIN(CDRH104RNP-5R2NC-EP)
EC A51/59/ Change PL6 to CDRH104R_1R5UH_10A.
EC A52/19/ Delete EEPROM PLCC32 socket package. (SIV-IBM-18)

BV1 / M-Note Schematic EC Tracking Record A (for DV --> SIV) Dec. 28, 2004
EC #/Page/Description/Part Affected/CMVC #

EC A53/04/ Change L35 filter bead from BLM18PG181SN1 to inductor 1uH.
EC A54/04/ Change L34 filter bead from BLM18PG181SN1 to inductor 91nH.
EC A55/04/ Change L19 inductor from 10uH to 1uH.
EC A56/37/ Change R32 from 1002 to 1608 size on LAN_MAG_TAP power trace. (SIV-IBM-19)
EC A57/05/ Change termination resister for Alviso composite TVout from 150ohm to 75ohm. (SIV-IBM-20)
EC A58/37/41/ Delete a gate logic from docking PCIE_WAKE# signal. (SIV-IBM-21)
EC A59/23/ Change R124 value from 33 ohm to 39 ohm. (SIV-IBM-22)
EC A60/23/ Add a cap 47P/50V/NPO for AC_BITCLK signal and NO ASM. (SIV-IBM-22)
EC A61/16/23/27/ Change signal name on Azalia interface. (SIV-IBM-22)
EC A62/27/ Change R154 from 33 ohm to 0 ohm.
EC A63/25/ Add internal MIC Bias logic circuit. CMVC# 66010/66014 (SIV-IBM-23)
EC A64/64/ Add filter HI0805R800R-10(5A) between VCC1R5M and VCC1R2AUX for EMI request.
EC A65/47/ Change R167,D17 to NO ASM and add series resistor between U27 pin31 and PCIRST# for ATMEL FAE recommand.
EC A66/32/ Change value of R247,R50,C299,C302 for IEEE lan measurement.
EC A67/08/ Add decouping capacitor of alviso power pin.
EC A68/25/ Change headphone selection circuit. (SIV-IBM-29)
EC A69/24/ Delete R555 pad. (SIV-IBM-23)
EC A70/24/ Change R525 to NO ASM. (SIV-IBM-23)
EC A71/24/ Change micphone selection circuit. (SIV-IBM-23)
EC A72/37/ Change net name from DOCK_MICIN_DTCT to DOCK_MICIN_DTCT# , DOCK_HPOUT_DTCT to DOCK_HPOUT_DTCT#. (SIV-IBM-29)
EC A73/23/ Change +EQ_BYPASS circuit. (SIV-IBM-23)
EC A74/23/ Add stereo external micophone circuit. (SIV-IBM-23)
EC A75/31/ Delete ESD lan switch diode.
EC A76/23/ Delete R130 pad.
EC A77/20/ Alignment guide pin of SATA HDD connector should be soldered to GND pad (SIV-IBM-30)
EC A78/35/ Add ESD TVD diode (SRV05-4) NO ASM near RJ45 connector side. (SIV-IBM-28)
EC A79/38/ Change H8 charge circuit. (SIV-IBM-31)
EC A80/38/ Keep CHARGE_CELL0 , CHARGE_CELL1 pull high resistor.
EC A81/31/ Add capacitors on lan switch power line. (SIV-IBM-32)
EC A82/43,44/ Add capacitors on MINI PCI-E power line. (SIV-IBM-32)
EC A83/15/ Change bead/capacitors value for CRT waveform measurement. (SIV-IBM-34)
EC A84/23/ Add a series resistor 33 ohm on SPDIF_OUT signal. (SIV-IBM-35)
EC A85/11/ Change R366,R378 from 100k to 10k ohm. (SIV-IBM-36)
EC A86/22/ Delete Clamp Diode and Add TVS diode (SEMTECH SRV05-4) on USB port 1,2. (SIV-IBM-38)
EC A87/22/ Change USB conn for SIV.
EC A88/58/ Change PR214,PR217 to from 1.5k to 732 ohm 1%.
EC A89/58/ Change PR250 from 49.9k 1% to 69.8k 1% ohm.
EC A90/59/ Change PR168,PR181 from 1.5k 1% to 732 1% ohm.
EC A91/59/ Change PR182,PR183 from 1.5k to 576 ohm 1%.
EC A92/59/ Change PR174 from 49.9K 1% to 48.7K 1% , PR188 from 49.9K 1% to 69.8K 1%.
EC A93/50/ Change PC11,PC10,PC7,PC79,PC8,PC58,PC63,PC65,PC66 from TMK325BJ475KN-T to TMK325BJ475KN-H.
EC A94/55/ Add a POSCAP capacitor "6TPE220MI (220uF/6.3V/ESR=18mohm, 7343size, H=2.0mm_max) on VCC3M power line and NOASM
EC A95/50/ For the accuracy of Charge Voltage (Cell voltage), pin_REFIN and "CHARGE_VOLT" signal should use same Power Net, and it was VCC3M.
EC A96/50/ Modify pin_ICTL circuit.Pin_ICTL should also use 8724_LDO_3D3V.
EC A97/50/ Modify pin_CSSN to support Docking System.
EC A98/11/ Modify clock gen driven buffer.
EC A99/28/ Change PCMCIA connector vendor.
EC A100/38/ Delete R84 resistor pad,it's un-necessary pull-up.
EC A101/40,47/ Connect TATER signals from ATMEL to TouchPad connector. (SIV-IBM-40)
EC A102/23/ Add 0ohm pad (NOASM) on SPDIF_RTN signal. (SIV-IBM-41)
EC A103/49/ Prepare to support new STMicro G-sensor. (SIV-IBM-43)
EC A104/14/ Add bypass cap and delete some caps on LCD signal for EMI request.
EC A105/39/ Add bypass cap on KB signal for EMI request.
EC A106/37/ Add bypass cap on docking signal for EMI request.

BV1 / M-Note Schematic EC Tracking Record A (for DV --> SIV) Dec. 28, 2004
EC #/Page/Description/Part Affected/CMVC #

EC A107/50/ Change PR152 from 12.7k 1% 11.3k 1% ohm. (SIV-IBM-44)
EC A108/50/ Change PR130 from 18.2k 1% 19.1k 1% ohm. (SIV-IBM-44)
EC A109/50/ Change PR29 from 100k 1% 100k 0.5% ohm ; PR135 from 13k 1% 12.7k 0.5% ohm. (SIV-IBM-44)
EC A110/50/ Change PC112 from 0.01U/25V/X7R to 1000p/50V/X7R.
EC A111/51/ Change PQ49,PQ12 from SI2301BDS to SI2303BDS.
EC A112/53/ Update foorprint and change PD26,PD27 footprint to DSM.
EC A113/64/ Delete PL22,PL23 for IBM power request.
EC A114/41/ Change R400 from 6.8k to 100k ohm.
EC A115/50/ Change PR260 from 10K 1% to 10 ohm 1%. (SIV-IBM-48)
EC A116/50/ Delete PR120,PR121 pad.
EC A117/50/ Change PC94 from 0.1U/16V/X7R to 0.01U/25V/X7R.
EC A118/59/ Improve power function for QCI power team request.
EC A119/58/ Improve power function for QCI power team request.
EC A120/35/ Change RJ11+RJ45 connector vendor and footprint.
EC A121/02/ Add a 100pF cap between cpu THERMDA , THERMDC signal and NOASM.
EC A122/22/ Change SRV05-4 pin5 to VCC5M. (SIV-IBM-49)
EC A123/50/ Change charge description.
EC A124/24,25/ Change R554,R573 to NOASM and R572 to ASM.
EC A125/40,47/ Change signal name SES_EN# to SES_EN.
EC A126/51/ Change PR107 from 470K to 75K ohm.
EC A127/14/ Change C212 from 0.047U/50V/X7R_6 to 0.1U/50V/X7R_6.
EC A128/61/ Change PU6 value from "MAX1589ETA-T to MAX1589ETT250+TW".
EC A129/55,56/ Change PC135,PC139,PC137,PC138,PC24,PC136,PC133,PC132,PC134,PC131,PC23,PC130,PC56 value from "ECPU1E105JBM" to "GRM31MR71E225KA93L".
EC A130/62/ Change PC115 to NOASM.
EC A131/37/ Change F3 to NANOSMDC050F.
EC A132/28/ Change R443 to 10 ohm.
EC A133/11/ Change R358, R84, R131, R132, R581 to 12.1 ohm 1%.
EC A134/35/ Change C666,C667 to NOASM for homologation.
EC A135/37/ Change R130 from NOASM to ASM.

BV1 / M-Note Schematic EC Tracking Record B (for SIV --> SIT) Apr. 19, 2005
EC #/Page/Description/Part Affected/CMVC #

EC B01/61/ Change PU6 from"MAX1589ETT250+TW" to "MAX1589A". (SIT-IBM-01)
EC B02/38/ Change Wireless Disable switch circuit. (SIT-IBM-03)
EC B03/47/ Change reset signal change for TPM/TATER chip. (SIT-IBM-04)
EC B04/17/22/ Change divide USB OC# signal. (SIT-IBM-05)
EC B05/43/44/ Remove MINI PCI-E latch pad. (SIT-IBM-09)
EC B06/17/ Planar ID change to SIT "3". (SIT-IBM-10)
EC B07/47/ 0.01uF capacitor add on VCC3M at U27(Atmel 8356908). (SIT-IBM-12)
EC B08/39/ Change R275 to NO ASM. (SIT-IBM-13)
EC B09/51/ Add pull down resistor for charger inrush. (SIT-IBM-14)
EC B10/38/ Change R104 to NO ASM. (SIT-IBM-15)
EC B11/29/ Change PCMACT pull high from VCC3M to VCC3B. (SIT-IBM-16)
EC B12/38/ Change R99 to NO ASM. (SIT-IBM-17)
EC B13/30/ Change IEEE1394 common choke from DLW21SN261SQ2L (260ohm@100Mhz) to DLW21SN121SQ2L (120ohm@100Mhz). (SIT-IBM-18)
EC B14/50/ Change MAX8724 pin_SHDN# ciruit . (SIT-IBM-20)
EC B15/50/ Change MAX8724 pin_IINP# ciruit . (SIT-IBM-21)
EC B16/14/ Change Q16 FET from SI3424DV to SI4890DY. (SIT-IBM-22)
EC B17/50/ Change for AC Adapter polarity Test Fail. (SIT-IBM-26)
EC B18/38/ Change GPIO_BT Pull up to Pull down. (SIT-IBM-27)
EC B19/50/ Change PQ46 from SI4890DY to SI4840DY. (SIT-IBM-26)
EC B20/35/ Change CN7 connector of pin3,4 to non ground pin for safety Hi-port test.
EC B21/35/ Remove C666,C667 pad.
EC B22/48/ Add 10uF/10V capacitor for VCC5B voltage drop while FAN turn on.
EC B23/19/ Reserve R,C for EMI request.
EC B24/14/ Change F4 to 1206 footprint.
EC B26/56/ Add NO ASM capacitors " GRM21BR71E155K" in VINT19 power rail to prevent any issue may happen like Voltage Dip on VINT19 or LCD Flicker or Acoustic Noise etc… (SIT-IBM-32)
EC B27/50/38/62/52/ Support 65W AC adapter. (SIT-IBM-33)
EC B28/53/ Chagne PR220,PR215 from 5.62K/F to 6.04K/F. (SIT-IBM-34)
EC B29/50/ Chagne PR96 from 470K 5% to 220K 5%. (SIT-IBM-35)
EC B30/24/ Chagne R526 from 10K 5% to 36K 5% ; R485 from 8.2K 5% to 16K 5%. (SIT-IBM-36)
EC B31/20/ Add 10 10V X5R capacitors near SATA connector. (SIT-IBM-37)
EC B32/55/ Add 100k 5% resistor between MAX1901 pin VL and pin SKIP#. (SIT-IBM-39)
EC B33/42/ Add 0 ohm resistor between DOCKING and SIO. (SIT-IBM-40)
EC B34/47/ 0.01uF capacitor add on RTCVCC at U27(Atmel 8356908). (SIT-IBM-41)
EC B35/07/ Add 10uF/10V/X5R capacitor for TVDAC power noise.
EC B36/51/ Remove PD42,PD43,PD12,PD14.
EC B37/35/ Change C133,C134 from 470pF to 1000pF and C607,C608 to ASM for EMI request.
EC B38/11/ Change R352 from 33 ohm to 75 ohm for 48 Mhz slew rate fail issue.
EC B39/11/ Change PCICLK 33MHz circuit for signal quality.
EC B40/19/ Remove G2 short pad for IBM request.
EC B41/49/ Correct G-sensor STMicro table as same as ADI.
EC B42/56/ EMI request
EC B43/50/56/ Change PC56, PC135, PC139, PC137, PC138, PC24, PC136, PC133, PC132, PC134, PC131, PC23, PC130 from GRM31MR71E225KA93L to GRF31CR72A105K
EC B44/05/ Change R212 from 255/F to 249/F. (SIT-IBM-44)
EC B45/47/ Change R293 to NOASM , D17 to ASM. (SIT-IBM-43)
EC B46/48/ Change R563 to NOASM.
EC B47/37/ Change C678,C681,C683 to NOASM, because these EMI capacitor will effect PS2 KB fail while with docking.
EC B48/37/ Change C672,C675,C677,C684,C687 to NOASM for EMI request.

BV1 / M-Note Schematic EC Tracking Record C (for SIT --> SVT-1) Jul. 13, 2005
EC #/Page/Description/Part Affected/CMVC #

EC C01/56/ Change CLK_ENABLE# and VR_PWRGD pull-up power from VCC3M to VCC3B for leakage issue. Add PQ44. (SVT-IBM-01)
EC C02/20/ Reserved R38 0ohm for SATA RSVD pin but not ASM. (SVT-IBM-08/15)
EC C03/54/ VCC1R8M_ON source change from M2_ON to M1_ON. For Cardbus leakage current concern. (SVT-IBM-02)
EC C04/16/20/ HDD detect pin connection. (SVT-IBM-07)
EC C05/02/ C346 100pF ASM because RF test failed by thermal shutdown. (SVT-IBM-08)
EC C06/35/ U30/U31 ASM for CDE ESD fail. (SVT-IBM-09)
EC C07/37/ Docking pin 14 connect to PCIE_WAKE#
EC C08/37/ C672, C675, C677, C684, C687, C682 change to 10pF for EMI request
EC C09/37/ Docking connector 48pin connect to GND (SVT_IBM-13)
EC C10/16/ Pull down preparation (No ASM) on ACZ_RST# pin on ICH6 side(SVT_IBM-12)
EC C11/16/17/ Reserve Cap on PCICLK_FR_ICH6M_33M & USBCLK_48M and close to ICH6 (No ASM)
EC C12/50/ Change PQ46 from SI4840DY to SI4890DY (SVT_IBM-13)
EC C13/50/ Change PU5 from MAX8724 to MAX8724A (SVT_IBM-14)
EC C14/55/ To reduce VCC5M undershoot.
EC C15/55/ To reduce VCC3M undershoot.
EC C16/17/ Planar ID change to SVT "4". (SVT_IBM-16)
EC C17/50/52/ Add cap according to EMI request.
EC C18/11/ Change PCICLK 33MHz damping for signal quality.
EC C19/23/ Pull down preparation (No ASM) on ACZ_RST# pin on code side (SVT_IBM-17)
EC C20/37/ Add ESD solution on PS/2 I/F
EC C21/37/ Reserve 0ohm resistor on FRAME# & PCICLK on debug connector for security concern (SVT-IBM-18)
EC C22/56/ Change PR193 & PR177 to ASM and value change to 10K
EC C23/11/ Change R352 value from 75ohm to 33ohm for USB 48MHz

BV1 / M-Note Schematic EC Tracking Record C (for SIT --> SVT-2) Aug. 02, 2005
EC #/Page/Description/Part Affected/CMVC #

EC C24/11/32 Add 0ohm serial resistor between clock gen and LAN chip for Ethernet transfer fail problem.
EC C25/02 Disconnect ITP signals and reserve test pad for jump wire. The reason is for GBE CLK routing.
EC C26/37 Add two caps on MSCLK,MSDATA signals for ESD solution.
EC C27/17 Change planar ID to "0110" SVT-2 for Ethernet transfer problem.
EC C28/37 Change R589,R590 to NOASM , and C675,C677,C684,C687 to 470pF/50V ASM for ESD solution.