CT_0505: Change footprint to BGA479M-SOCKET from L100505 from MPGA479M

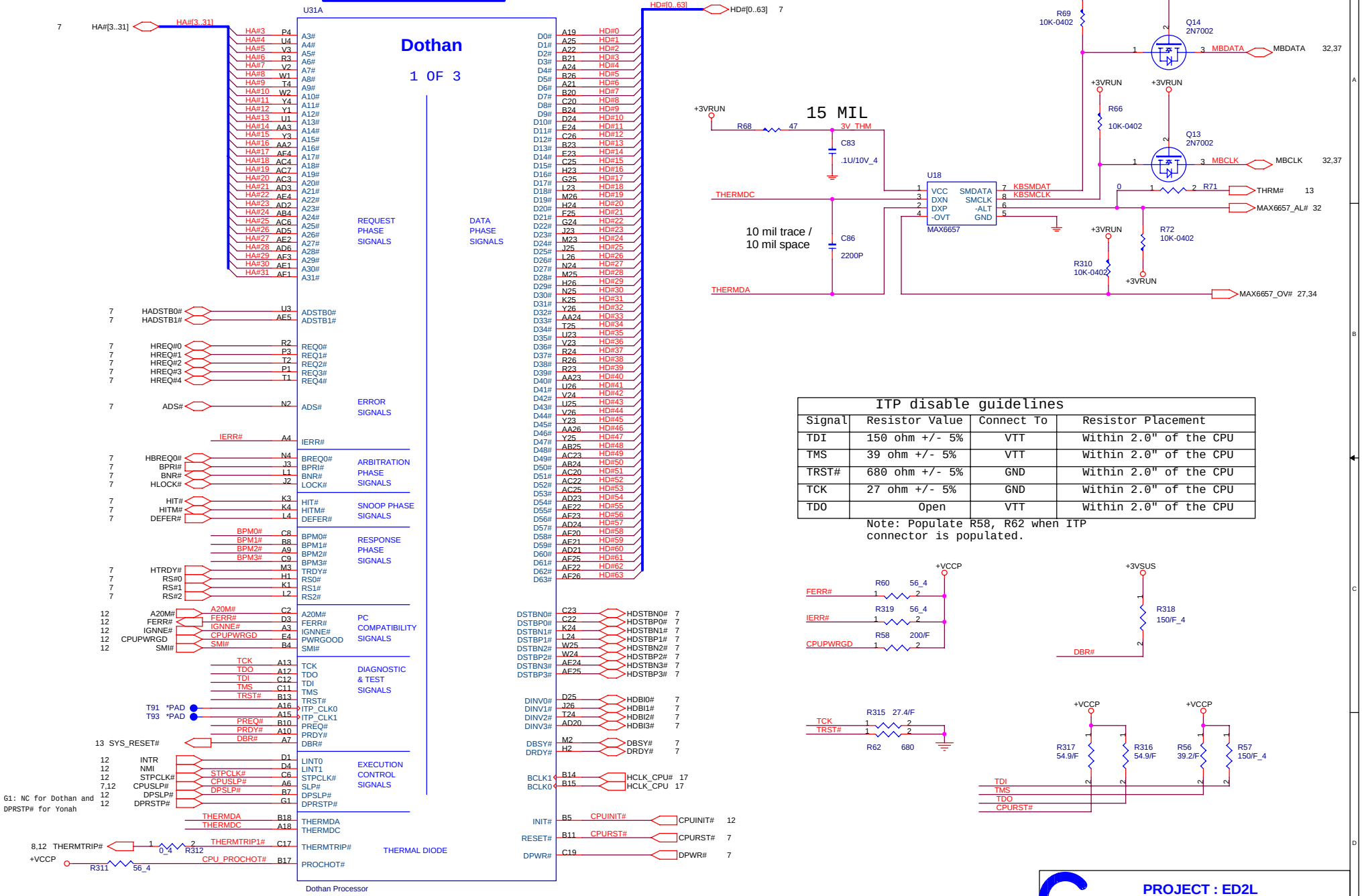

ITP disable guidelines

Signal	Resistor Value	Connect To	Resistor Placement
TDI	150 ohm +/- 5%	VTT	Within 2.0" of the CPU
TMS	39 ohm +/- 5%	VTT	Within 2.0" of the CPU
TRST#	680 ohm +/- 5%	GND	Within 2.0" of the CPU
TCK	27 ohm +/- 5%	GND	Within 2.0" of the CPU
TDO	Open	VTT	Within 2.0" of the CPU

Note: Populate R58, R62 when ITP connector is populated.

PROJECT : ED2L
Quanta Computer Inc.

Size	Document Number	Rev
	Dothan (HOST)	E3A

Date: Wednesday, March 23, 2005 Sheet 5 of 38

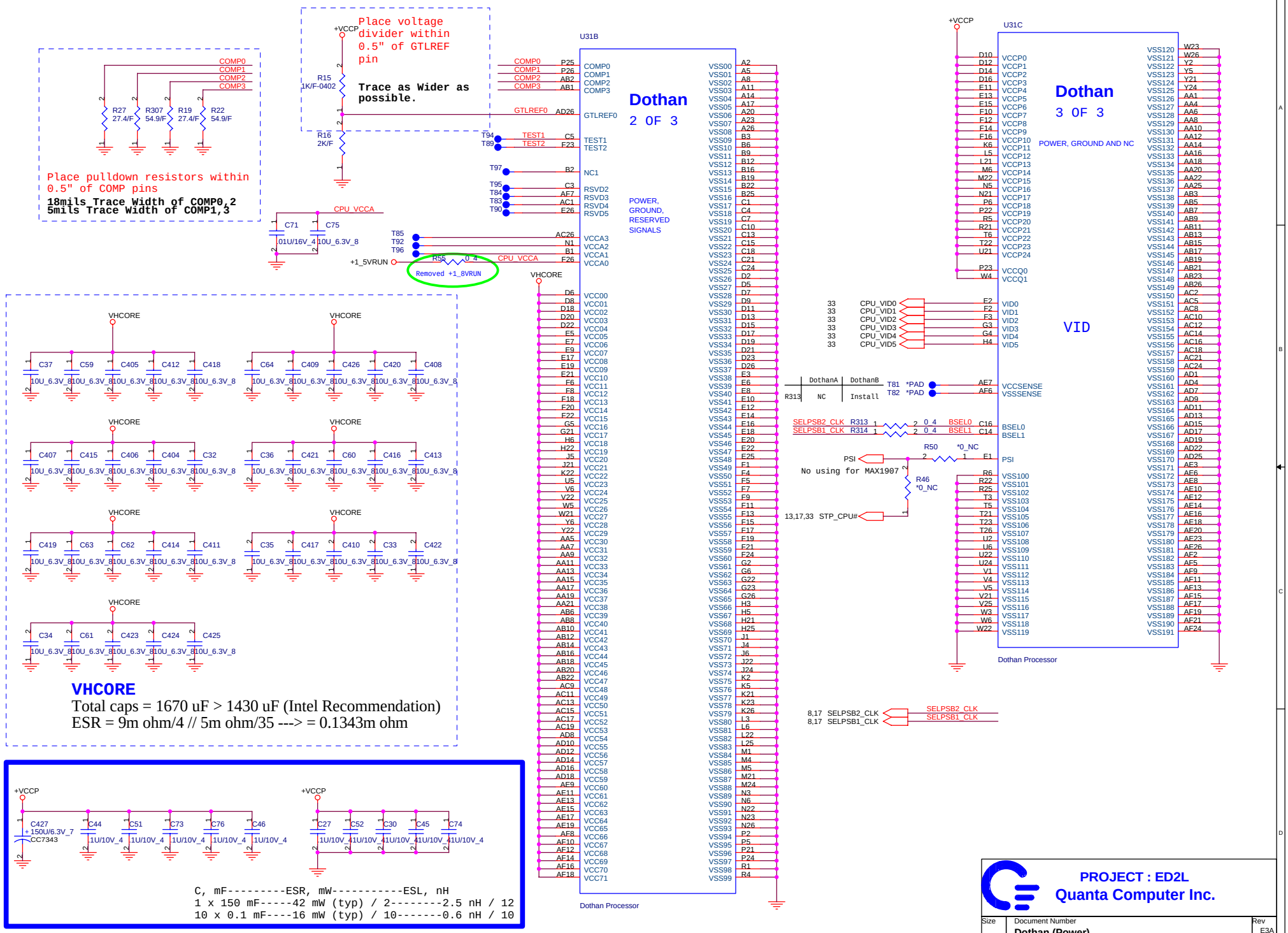
Place voltage divider within 0.5" of GTLREF pin
Trace as Wider as possible.
Place pulldown resistors within 0.5" of COMP pins
18mils Trace Width of COMP0,2
5mils Trace Width of COMP1,3
Dothan 2 OF 3
POWER, GROUND, RESERVED SIGNALS
Dothan Processor
Dothan 3 OF 3
POWER, GROUND AND NC
VID
Dothan Processor
Removed +1_8VRUN
No using for MAX1907
VHCORE
Total caps = 1670 uF > 1430 uF (Intel Recommendation)
ESR = 9m ohm/4 // 5m ohm/35 ---> = 0.1343m ohm
C, mF---------ESR, mW----------ESL, nH
1 x 150 mF-----42 mW (typ) / 2--------2.5 nH / 12
10 x 0.1 mF----16 mW (typ) / 10-------0.6 nH / 10
PROJECT : ED2L
Quanta Computer Inc.
Document Number
Dothan (Power)
Rev E3A
Date: Wednesday, March 23, 2005
Sheet 6 of 38

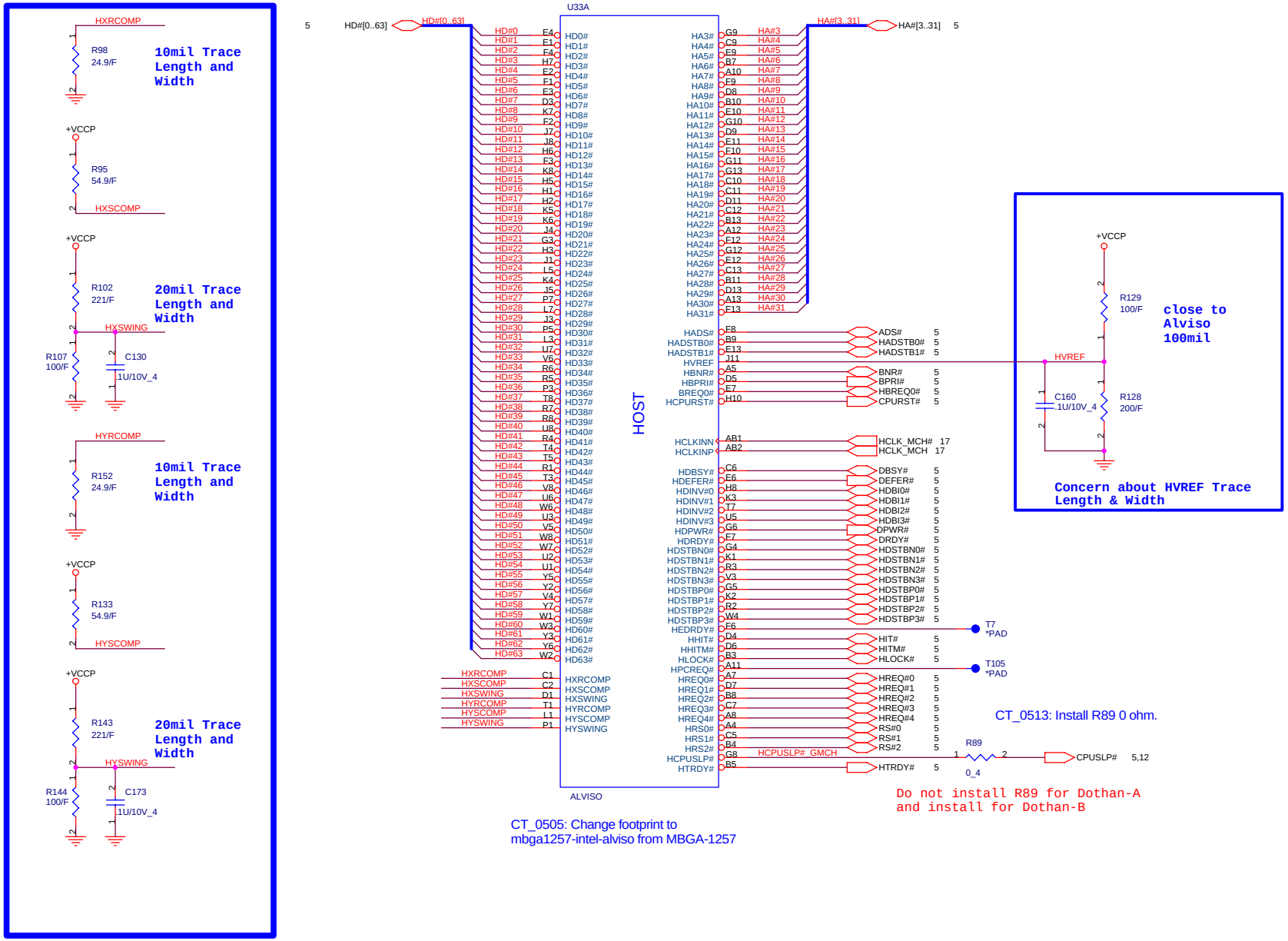

PROJECT : ED2L

Quanta Computer Inc.

Size	Document Number	Rev
	Alviso (HOST)	E3A

Date: Wednesday, March 23, 2005 Sheet 7 of 38

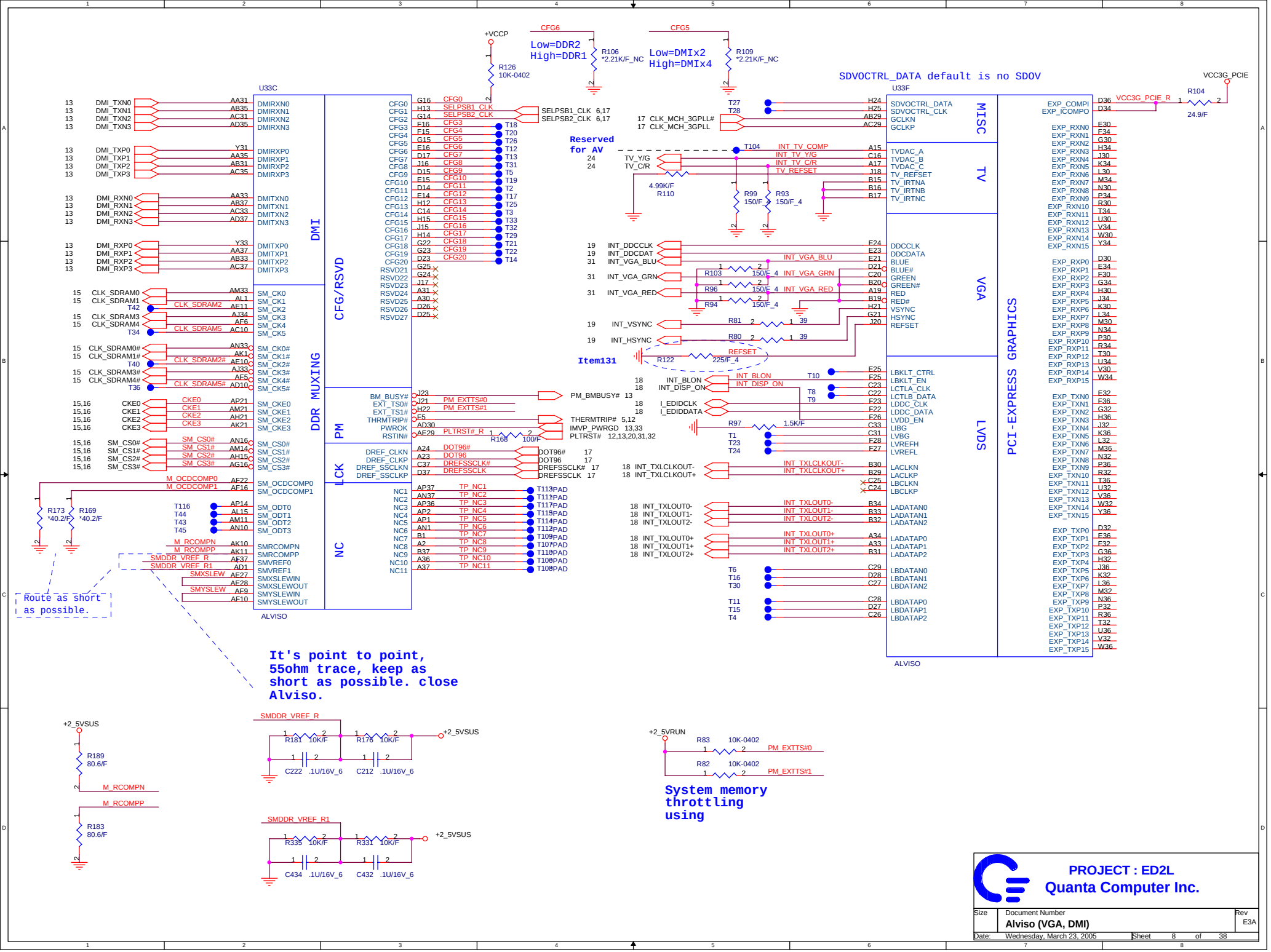
U33C
DMI
CFG/RSVD
DDR MUXING
PM
LCK
NC
ALVISO
U33F
MISC
TV
VGA
LVDS
PCI-EXPRESS GRAPHICS
ALVISO
+VCCP
R126 10K-0402
CFG6
Low=DDR2
High=DDR1
R106 *2.21K/F_NC
CFG5
Low=DMIx2
High=DMIx4
R109 *2.21K/F_NC
SDVOCTRL_DATA default is no SDOV
VCC3G_PCIE
R104 24.9/F
Reserved for AV
Item131
Route as short as possible.
It's point to point, 55ohm trace, keep as short as possible. close Alviso.
System memory throttling using
+2_5VSUS
+2_5VRUN
R189 80.6/F
R183 80.6/F
R181 10K/F
R176 10K/F
C222 .1U/16V_6
C212 .1U/16V_6
R335 10K/F
R331 10K/F
C434 .1U/16V_6
C432 .1U/16V_6
R83 10K-0402
R82 10K-0402
PM_EXTTS#0
PM_EXTTS#1
PROJECT : ED2L
Quanta Computer Inc.
Size
Document Number
Alviso (VGA, DMI)
Rev
E3A
Date: Wednesday, March 23, 2005
Sheet 8 of 38

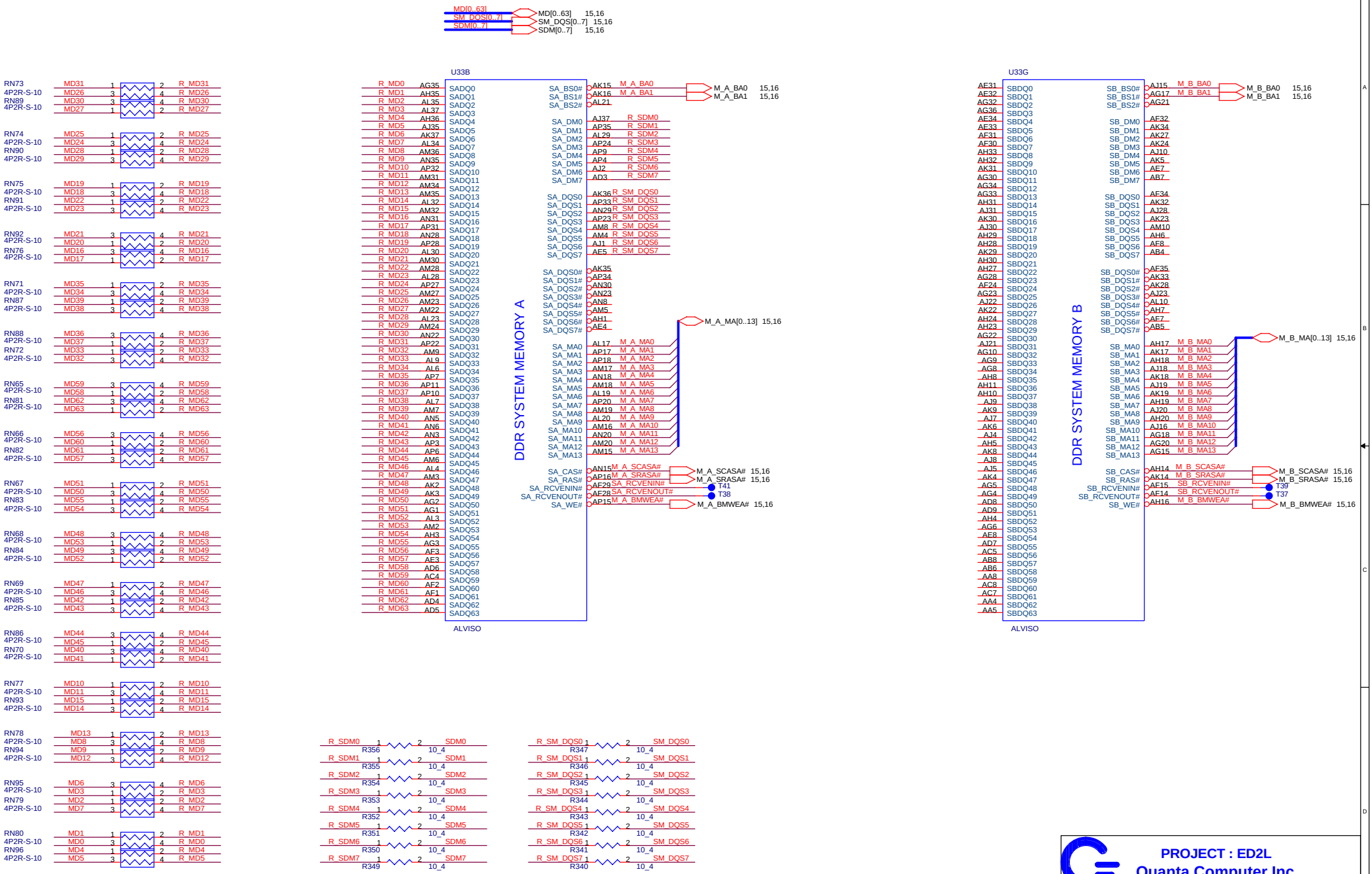
MD[0..63]
SM_DQS[0..7]
SDM[0..7]
MD[0..63] 15,16
SM_DQS[0..7] 15,16
SDM[0..7] 15,16
U33B
DDR SYSTEM MEMORY A
ALVISO
M_A_BA0 15,16
M_A_BA1 15,16
M_A_MA[0..13] 15,16
M_A_SCASA# 15,16
M_A_SRASA# 15,16
M_A_BMWEA# 15,16
U33G
DDR SYSTEM MEMORY B
ALVISO
M_B_BA0 15,16
M_B_BA1 15,16
M_B_MA[0..13] 15,16
M_B_SCASA# 15,16
M_B_SRASA# 15,16
M_B_BMWEA# 15,16
PROJECT : ED2L
Quanta Computer Inc.
Size
Document Number
Alviso (DDR)
Rev
E3A
Date: Wednesday, March 23, 2005
Sheet 9 of 38

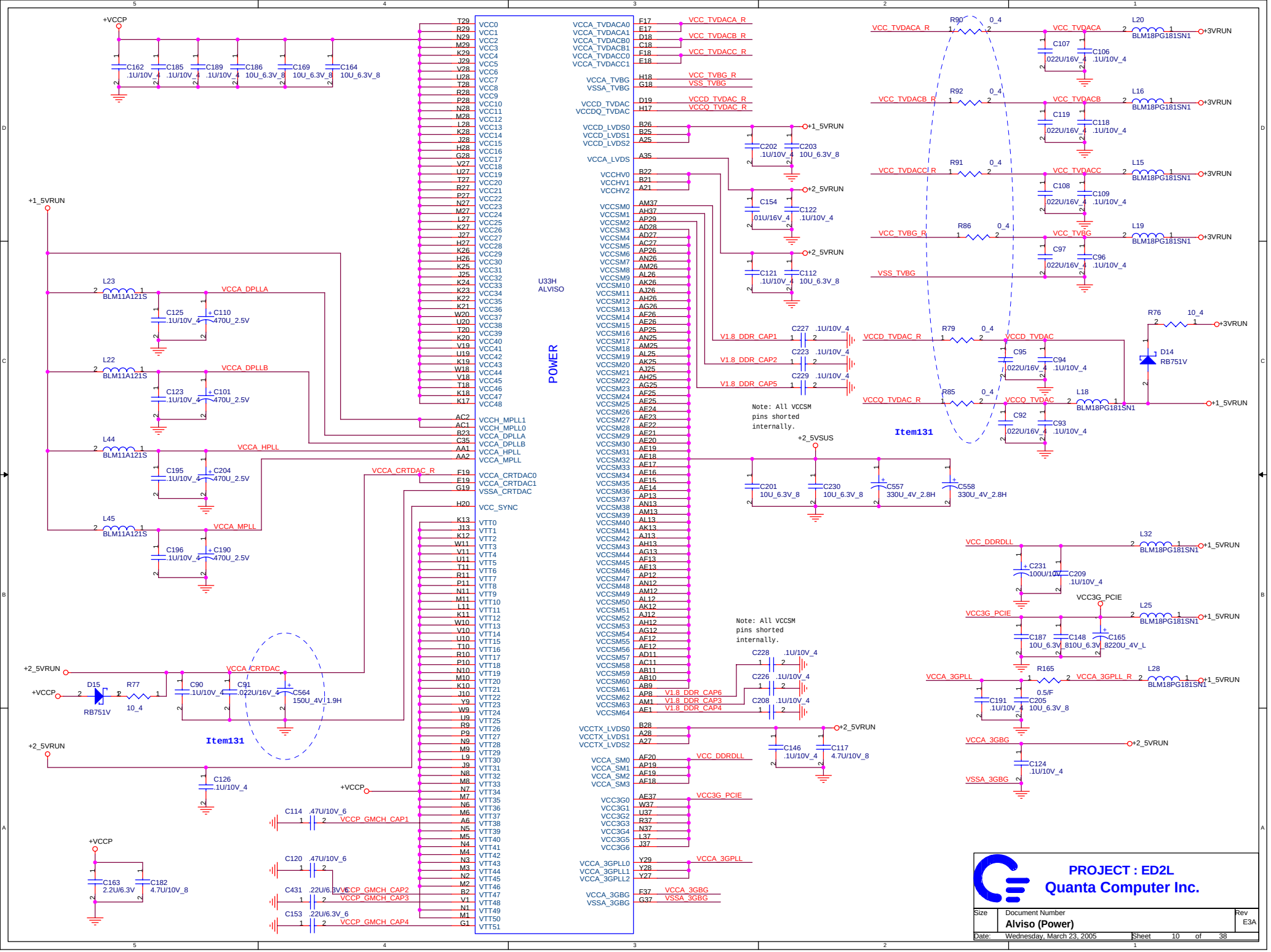
U33H
ALVISO
POWER
Item131
Note: All VCCSM pins shorted internally.
PROJECT : ED2L
Quanta Computer Inc.
Size
Document Number
Alviso (Power)
Rev
E3A
Date: Wednesday, March 23, 2005
Sheet 10 of 38

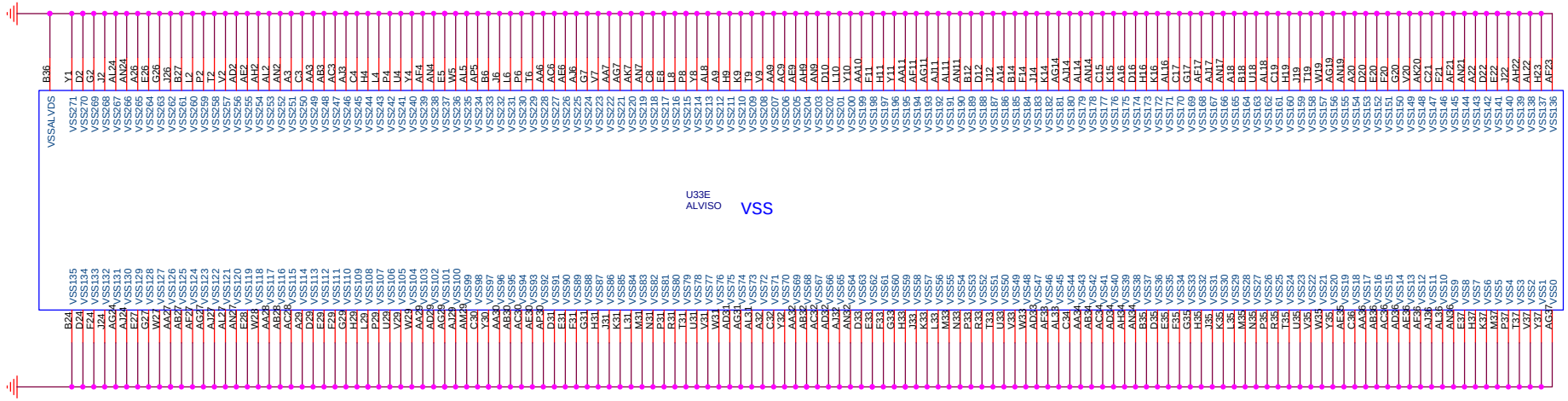

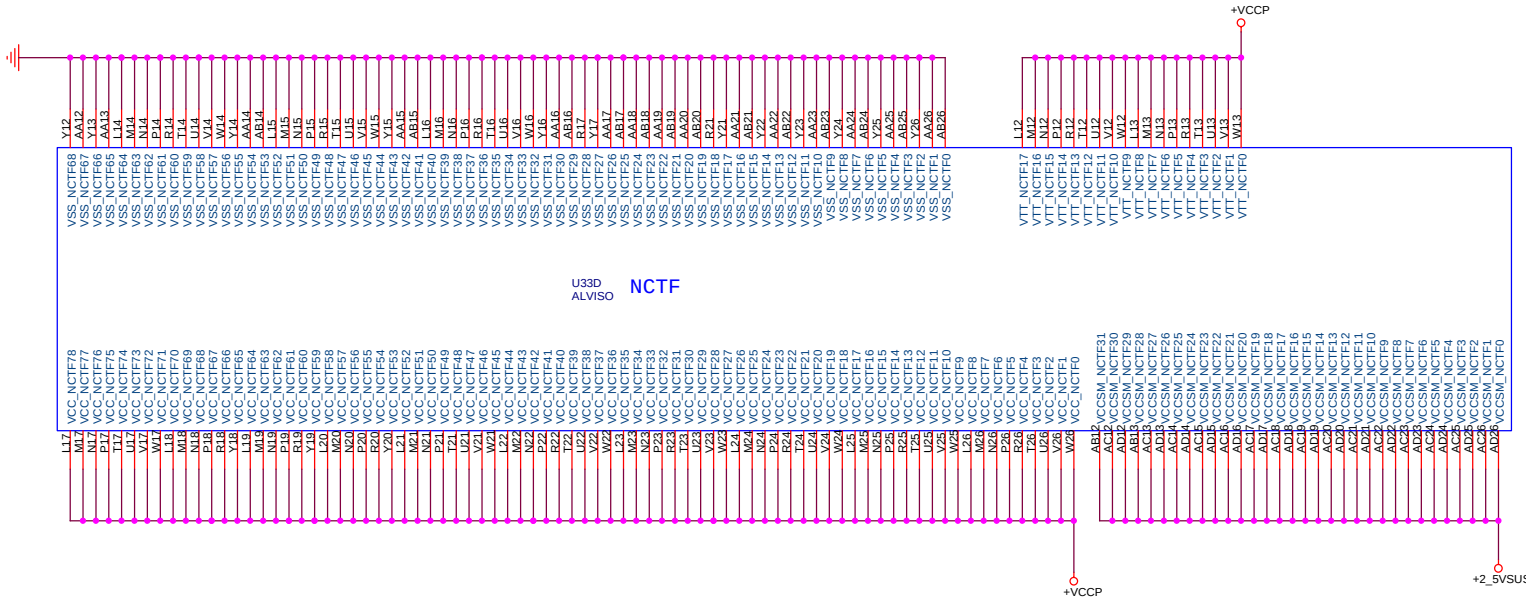

DDRI is 2.5V, DDRII is 1.8V.

PROJECT : ED2L

Quanta Computer Inc.

Size	Document Number	Rev
	Alviso (VSS, NCTF0	E3A

Date: Wednesday, March 23, 2005 Sheet 11 of 38

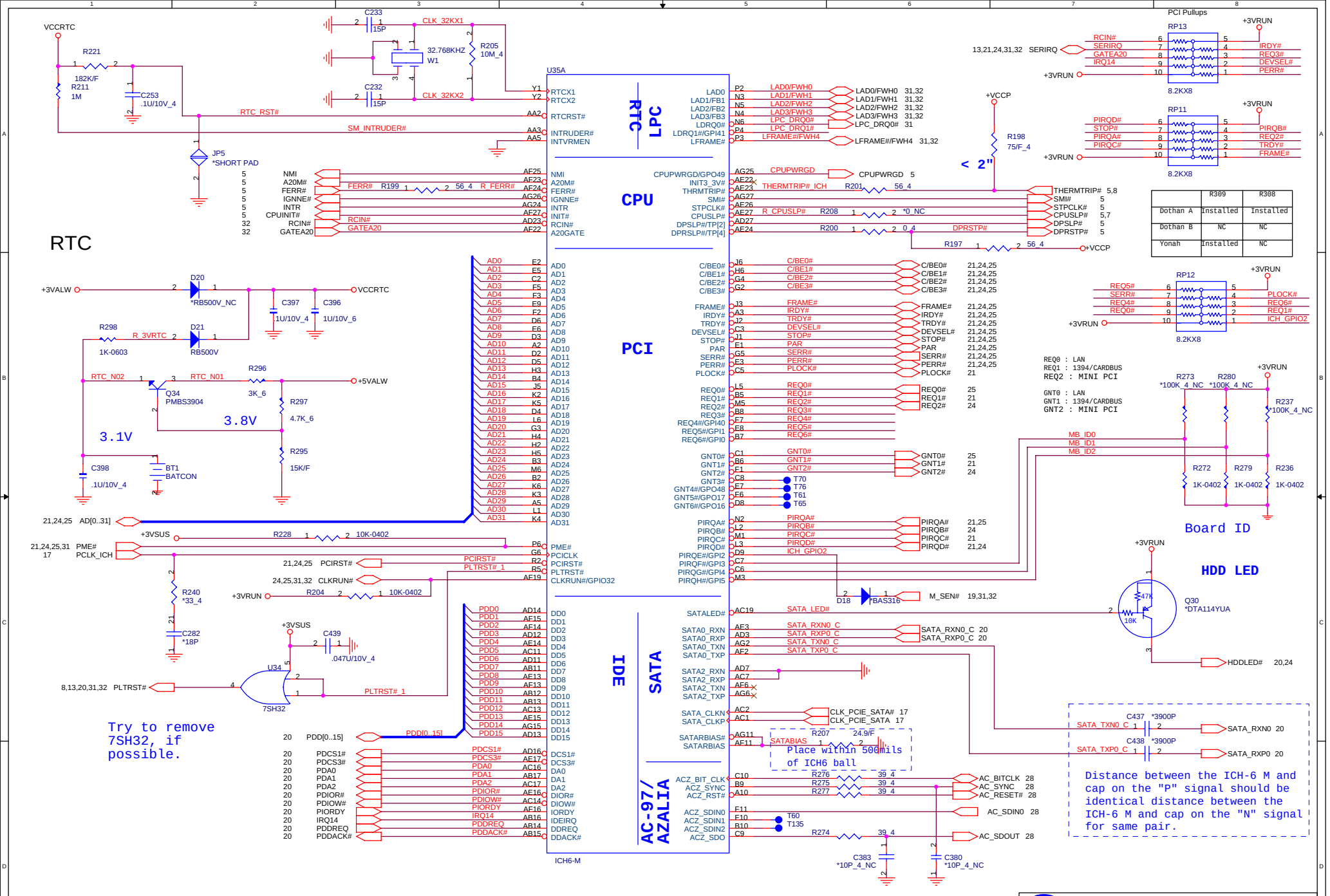

	R309	R308
Dothan A	Installed	Installed
Dothan B	NC	NC
Yonah	Installed	NC

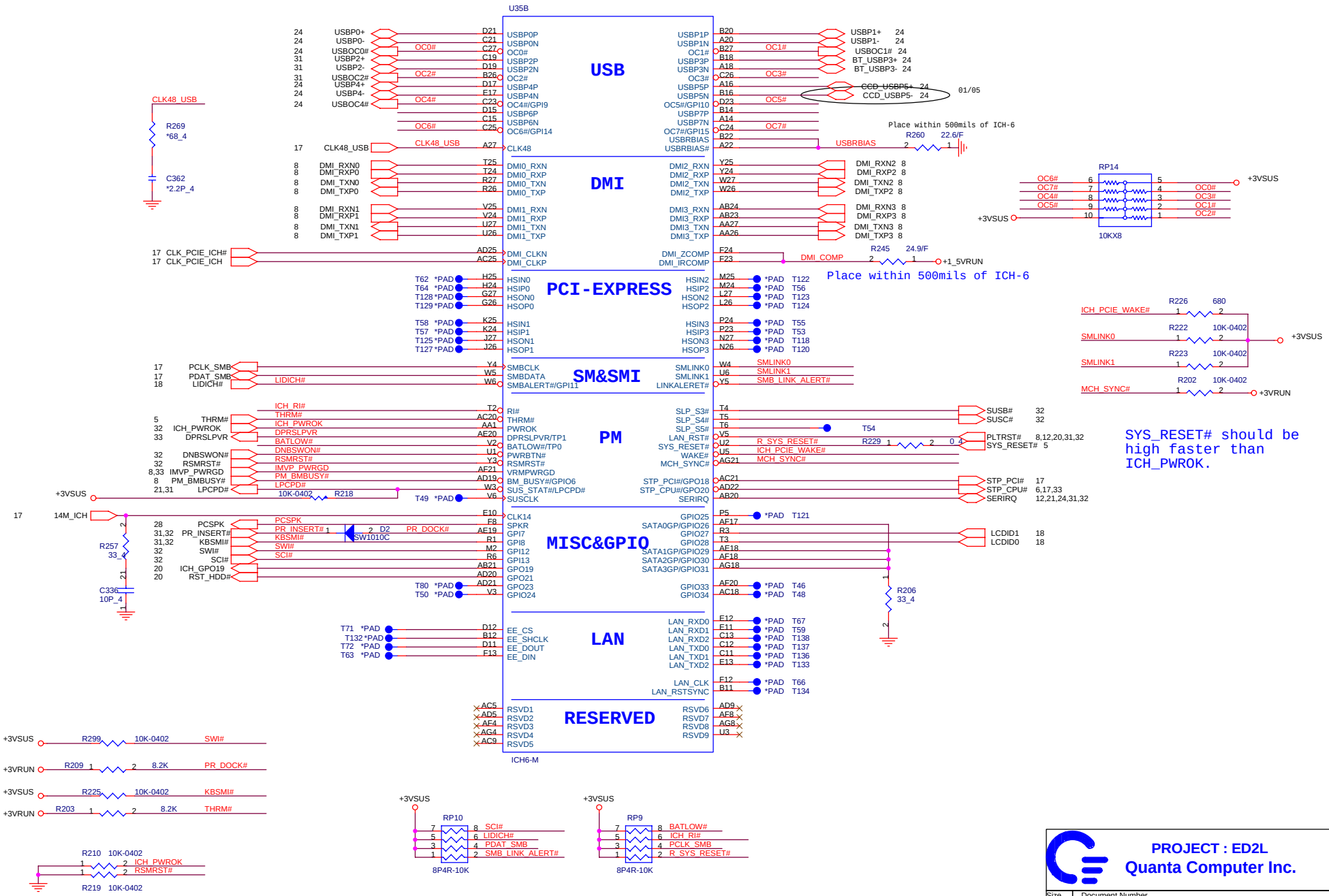
U35B
USB
DMI
PCI-EXPRESS
SM&SMI
PM
MISC&GPIO
LAN
RESERVED
ICH6-M
Place within 500mils of ICH-6
SYS_RESET# should be high faster than ICH_PWROK.
PROJECT : ED2L
Quanta Computer Inc.
Document Number
ICH6-M (USB, DMI, LPC)
Rev
E3A
Date: Wednesday, March 23, 2005
Sheet 13 of 38

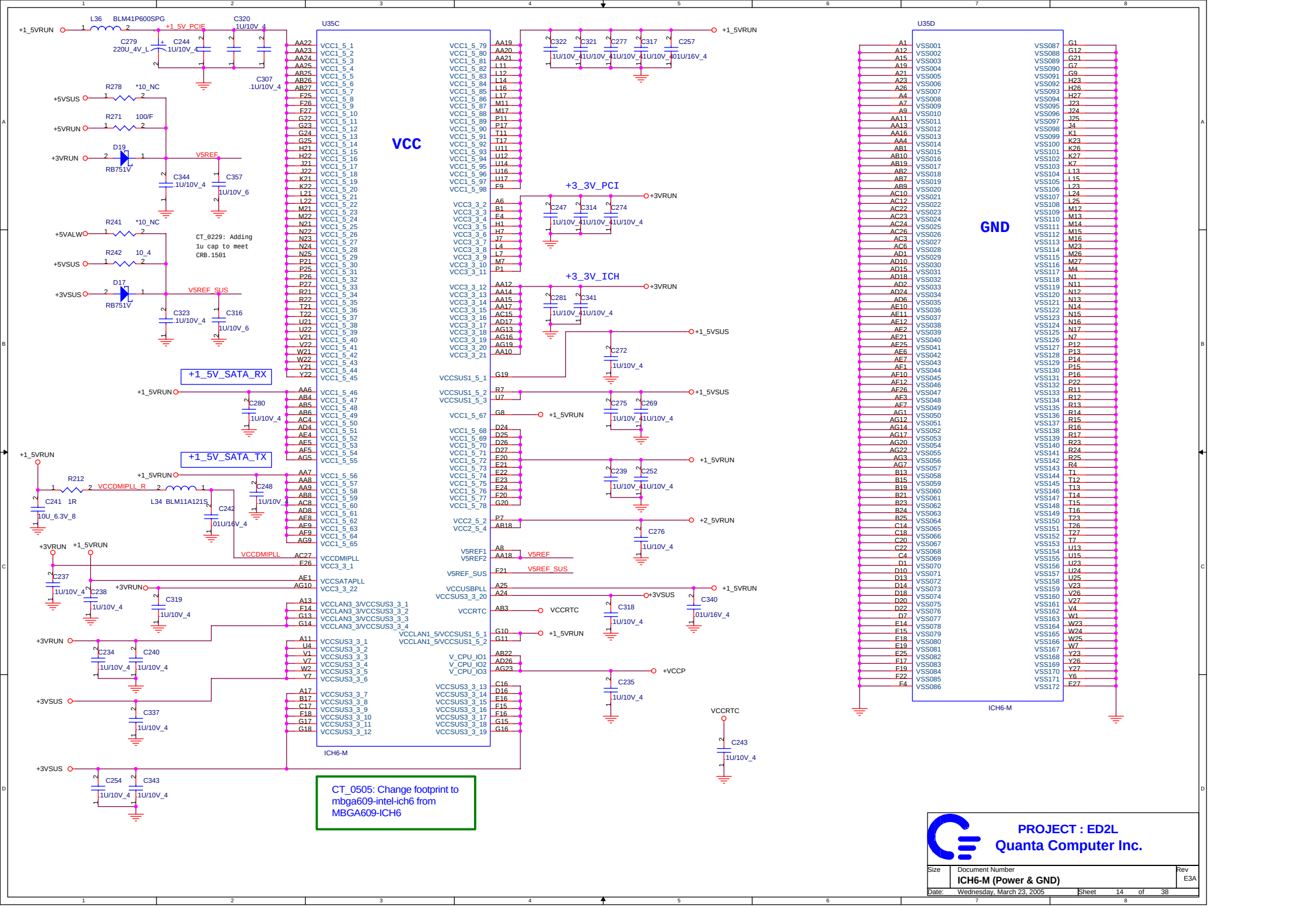
U35C
VCC
ICH6-M
U35D
GND
ICH6-M
L36 BLM41P600SPG
+1_5VRUN
+1_5V_PCIE
C320 1U/10V_4
C279 220U_4V_L
C244 1U/10V_4
C307 .1U/10V_4
R278 *10_NC
+5VSUS
R271 100/F
+5VRUN
D19 RB751V
+3VRUN
V5REF
C344 .1U/10V_4
C357 1U/10V_6
R241 *10_NC
+5VALW
R242 10_4
+5VSUS
D17 RB751V
+3VSUS
V5REF_SUS
C323 .1U/10V_4
C316 1U/10V_6
CT_0229: Adding 1u cap to meet CRB.1501
+1_5V_SATA_RX
+1_5V_SATA_TX
R212
VCCDMIPLL_R
C241 1R 10U_6.3V_8
L34 BLM11A121S
C242 .01U/16V_4
C248 1U/10V_4
VCCDMIPLL
C237 1U/10V_4
C238 1U/10V_4
C319 1U/10V_4
C234 1U/10V_4
C240 1U/10V_4
C337 1U/10V_4
C254 1U/10V_4
C343 1U/10V_4
C280 1U/10V_4
+3_3V_PCI
+3VRUN
C247 1U/10V_4
C314 1U/10V_4
C274 1U/10V_4
+3_3V_ICH
C281 1U/10V_4
C341 1U/10V_4
C272 1U/10V_4
+1_5VSUS
C275 1U/10V_4
C269 1U/10V_4
C239 1U/10V_4
C252 1U/10V_4
+2_5VRUN
C276 1U/10V_4
V5REF
V5REF_SUS
C318 1U/10V_4
+3VSUS
C340 .01U/16V_4
VCCRTC
C235 1U/10V_4
+VCCP
C243 1U/10V_4
C322 1U/10V_4
C321 1U/10V_4
C277 1U/10V_4
C317 1U/10V_4
C257 .01U/16V_4
CT_0505: Change footprint to mbga609-intel-ich6 from MBGA609-ICH6
PROJECT : ED2L
Quanta Computer Inc.
Size
Document Number
ICH6-M (Power & GND)
Rev
E3A
Date: Wednesday, March 23, 2005
Sheet 14 of 38

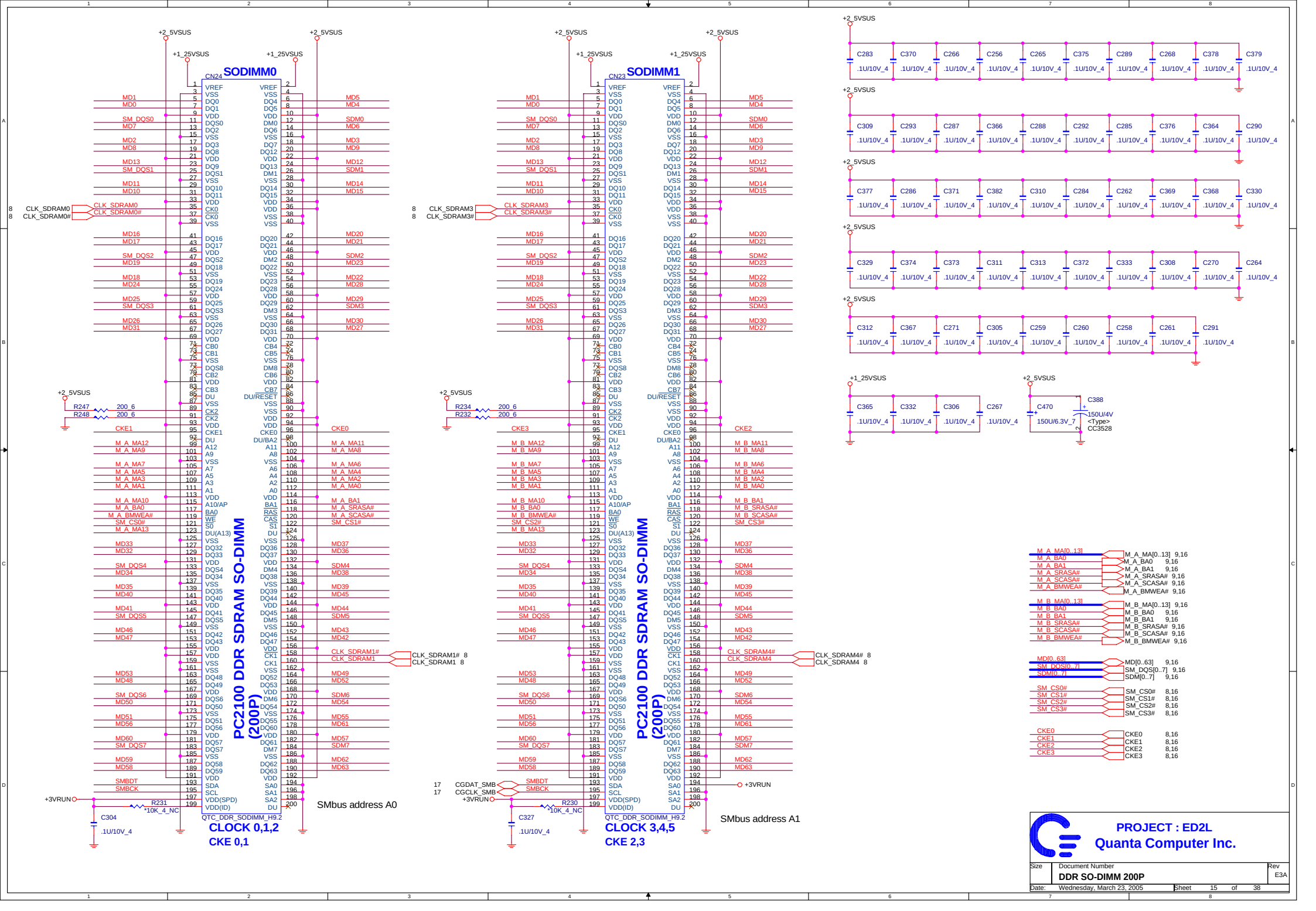
SODIMM0
CN24
PC2100 DDR SDRAM SO-DIMM (200P)
QTC_DDR_SODIMM_H9.2
CLOCK 0,1,2
CKE 0,1
SMbus address A0
SODIMM1
CN23
CLOCK 3,4,5
CKE 2,3
SMbus address A1
+2_5VSUS
+1_25VSUS
+3VRUN
CLK_SDRAM0
CLK_SDRAM0#
CLK_SDRAM3
CLK_SDRAM3#
CLK_SDRAM1#
CLK_SDRAM1
CLK_SDRAM4#
CLK_SDRAM4
CGDAT_SMB
CGCLK_SMB
R247 200_6
R248 200_6
R234 200_6
R232 200_6
R231 *10K_4_NC
R230 *10K_4_NC
C304 .1U/10V_4
C327 .1U/10V_4
C283 C370 C266 C256 C265 C375 C289 C268 C378 C379
C309 C293 C287 C366 C288 C292 C285 C376 C364 C290
C377 C286 C371 C382 C310 C284 C262 C369 C368 C330
C329 C374 C373 C311 C313 C372 C333 C308 C270 C264
C312 C367 C271 C305 C259 C260 C258 C261 C291
C365 C332 C306 C267
C470 150U/6.3V_7
C388 150U/4V <Type> CC3528
M_A_MA[0..13]
M_A_BA0
M_A_BA1
M_A_SRASA#
M_A_SCASA#
M_A_BMWEA#
M_B_MA[0..13]
M_B_BA0
M_B_BA1
M_B_SRASA#
M_B_SCASA#
M_B_BMWEA#
MD[0..63]
SM_DQS[0..7]
SDM[0..7]
SM_CS0#
SM_CS1#
SM_CS2#
SM_CS3#
CKE0
CKE1
CKE2
CKE3
PROJECT : ED2L
Quanta Computer Inc.
Size
Document Number
DDR SO-DIMM 200P
Rev
E3A
Date: Wednesday, March 23, 2005
Sheet 15 of 38

For terminal R-pack.

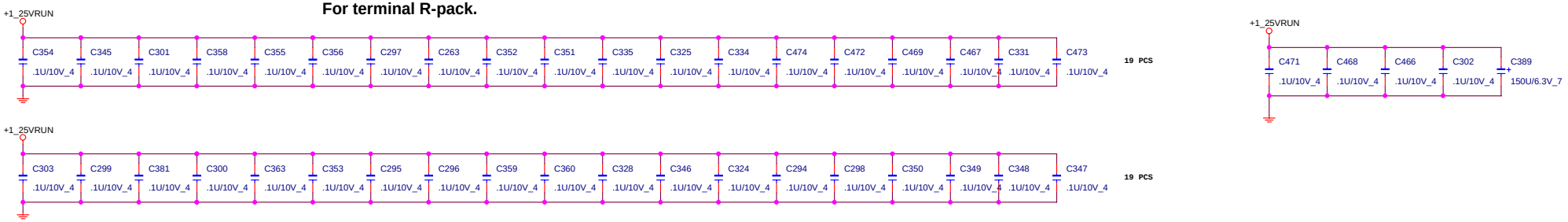

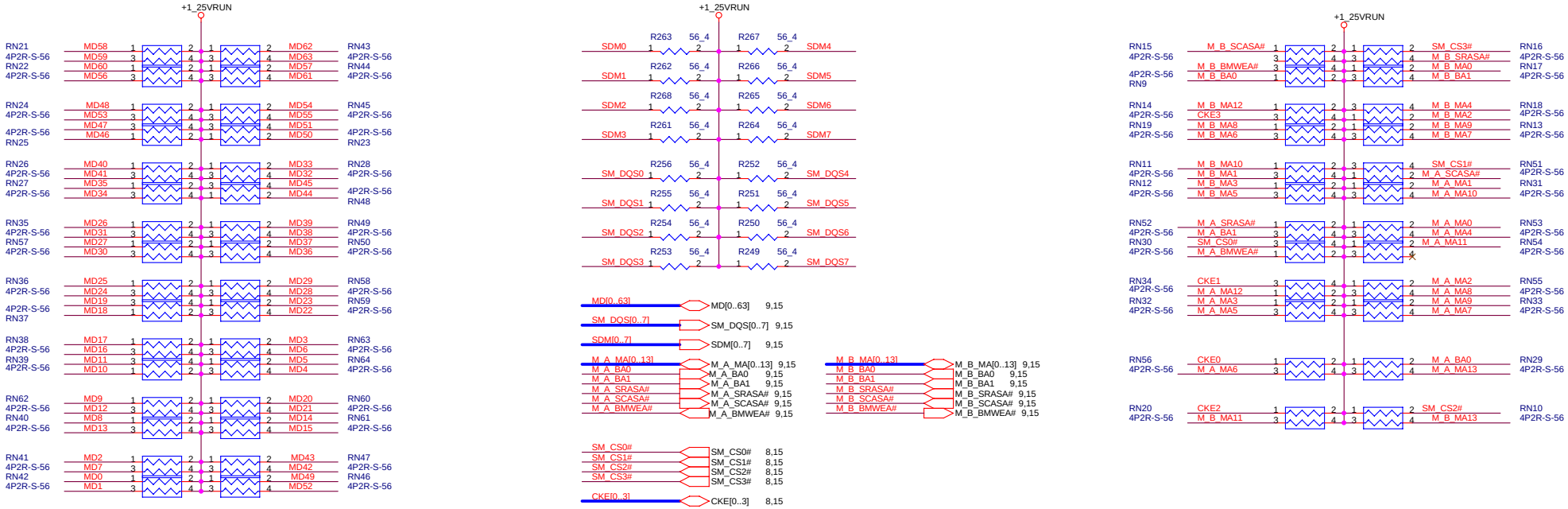

PROJECT : ED2L
Quanta Computer Inc.

Size	Document Number	Rev
	DDR TERMINATION	E3A

Date: Wednesday, March 23, 2005 Sheet 16 of 38

FSC	FSB	FSA	CPU	SRC	PCI
1	0	1	100	100	33
0	0	1	133	100	33
0	1	1	166	100	33
0	1	0	200	100	33
0	0	0	266	100	33
1	0	0	333	100	33
1	1	0	400	100	33
1	1	1	RSVD	100	33

	DothanA	DothanB
R137	Install	NC
R330	NC	NC

Place these termination to close CK410M. Cause those Pin-out is for Current-Mode.

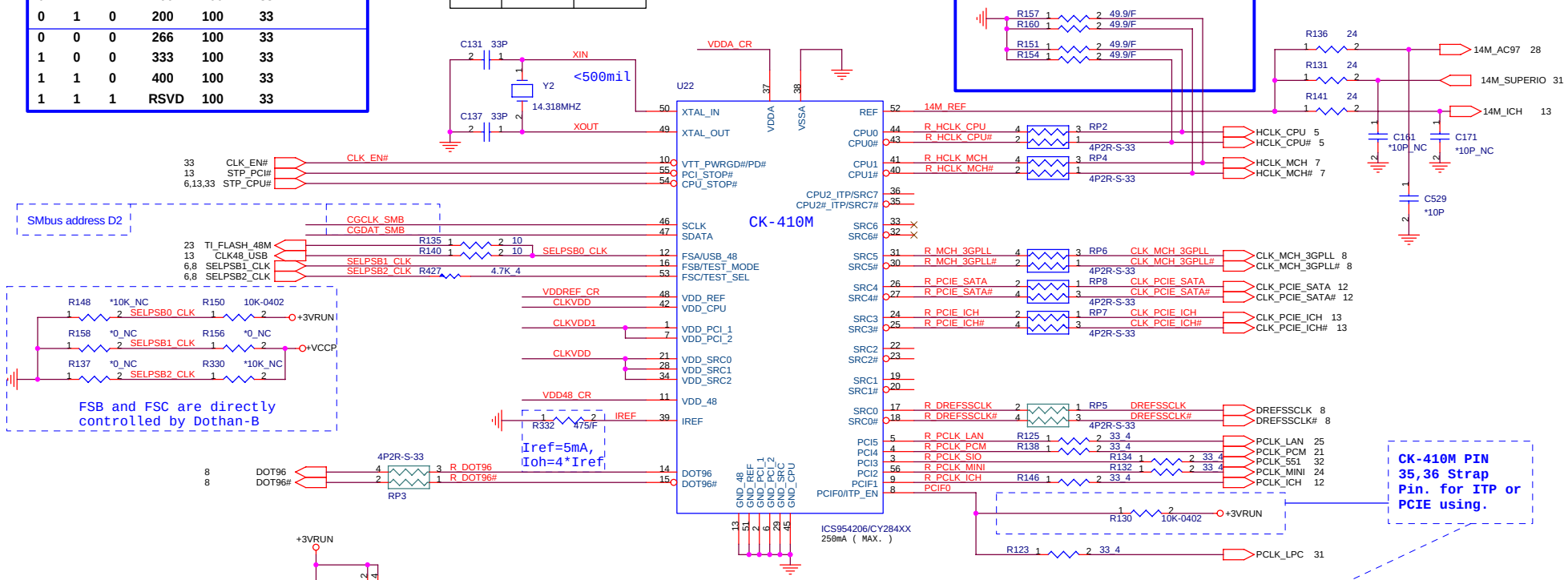

PROJECT : ED2L
Quanta Computer Inc.

Size	Document Number	Rev
	CLOCK Generator	E3A

Date: Wednesday, March 23, 2005 Sheet 17 of 38

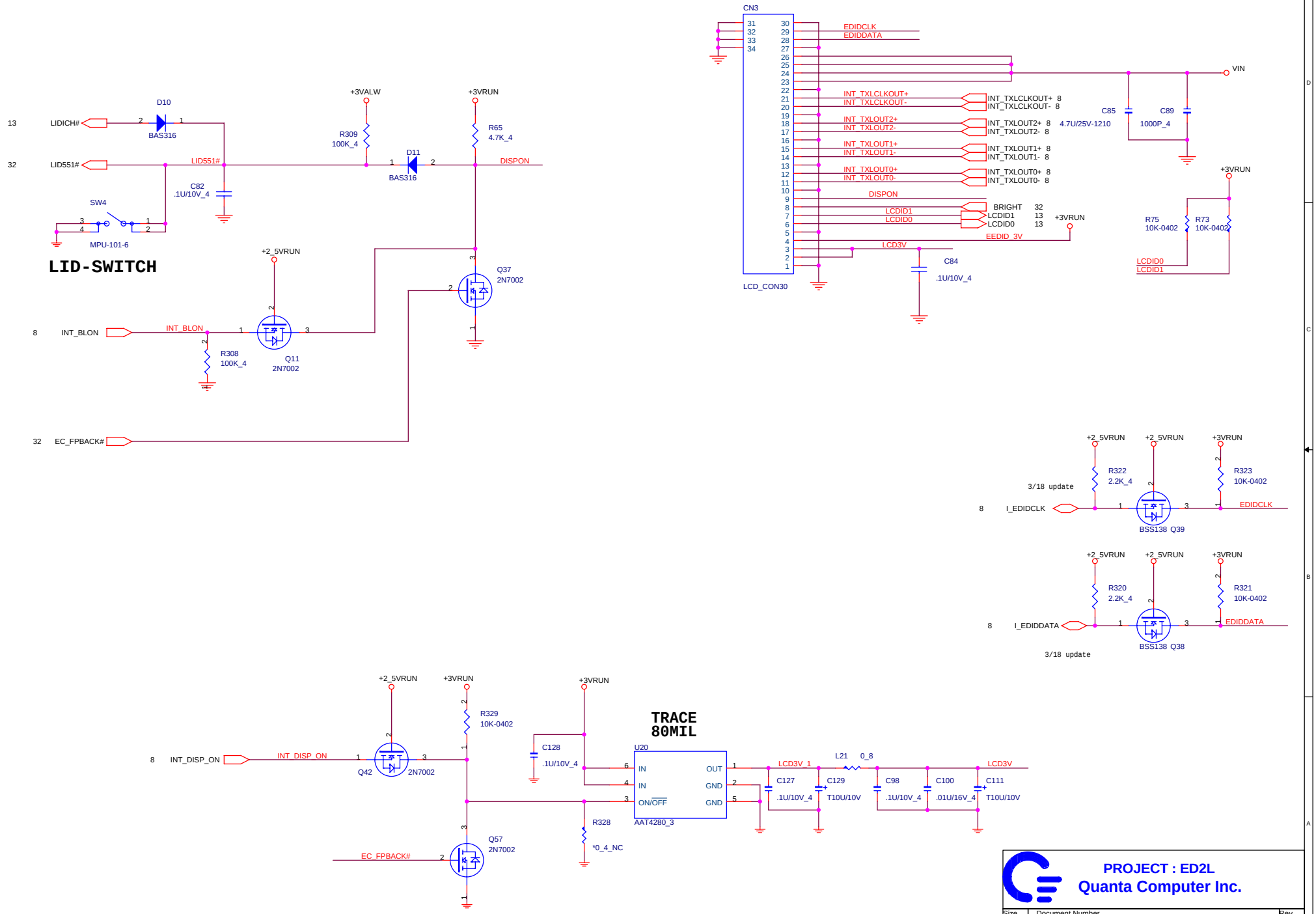
LID-SWITCH
13 LIDICH#
32 LID551#
D10
BAS316
LID551#
C82
.1U/10V_4
SW4
MPU-101-6
+3VALW
R309
100K_4
D11
BAS316
+3VRUN
R65
4.7K_4
DISPON
+2_5VRUN
Q37
2N7002
8 INT_BLON
INT_BLON
R308
100K_4
Q11
2N7002
32 EC_FPBACK#
CN3
LCD_CON30
EDIDCLK
EDIDDATA
INT_TXLCLKOUT+
INT_TXLCLKOUT-
INT_TXLOUT2+
INT_TXLOUT2-
INT_TXLOUT1+
INT_TXLOUT1-
INT_TXLOUT0+
INT_TXLOUT0-
DISPON
LCDID1
LCDID0
LCD3V
EEDID_3V
BRIGHT
+3VRUN
C84
.1U/10V_4
VIN
C85
4.7U/25V-1210
C89
1000P_4
R75
10K-0402
R73
10K-0402
LCDID0
LCDID1
3/18 update
8 I_EDIDCLK
R322
2.2K_4
R323
10K-0402
BSS138 Q39
EDIDCLK
8 I_EDIDDATA
R320
2.2K_4
R321
10K-0402
BSS138 Q38
EDIDDATA
3/18 update
8 INT_DISP_ON
INT_DISP_ON
Q42
2N7002
R329
10K-0402
C128
.1U/10V_4
TRACE
80MIL
U20
IN
IN
ON/OFF
OUT
GND
GND
AAT4280_3
R328
*0_4_NC
Q57
2N7002
EC_FPBACK#
LCD3V_1
C127
.1U/10V_4
C129
T10U/10V
L21
0_8
C98
.1U/10V_4
C100
.01U/16V_4
C111
T10U/10V
LCD3V
PROJECT : ED2L
Quanta Computer Inc.
Size
Document Number
LCD Connector
Rev
E3A
Date: Wednesday, March 23, 2005
Sheet 18 of 38

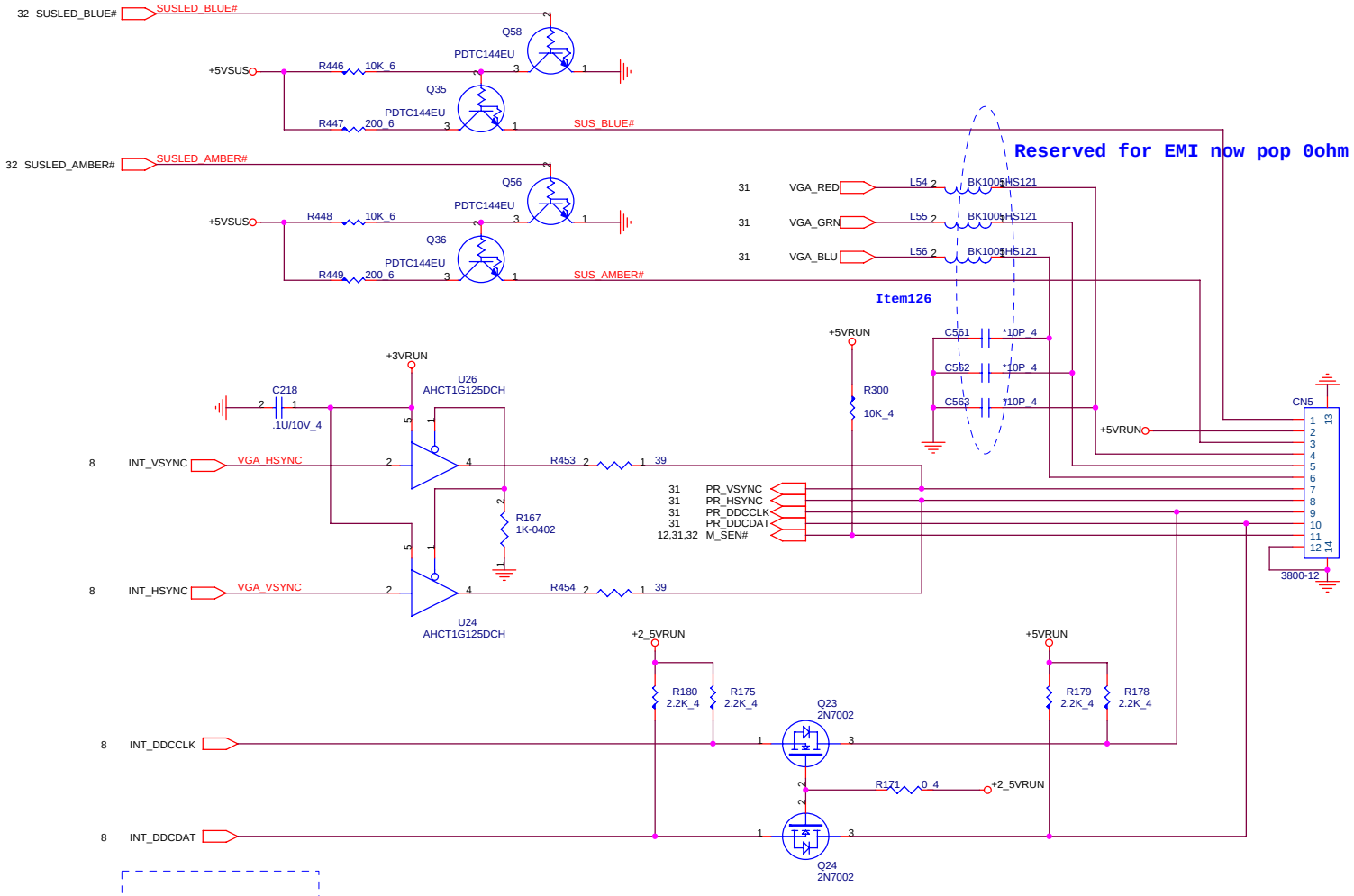

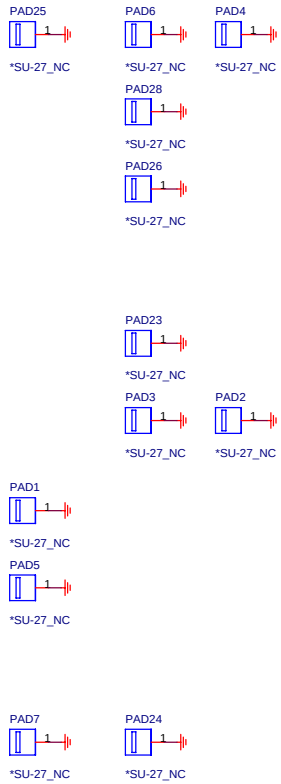

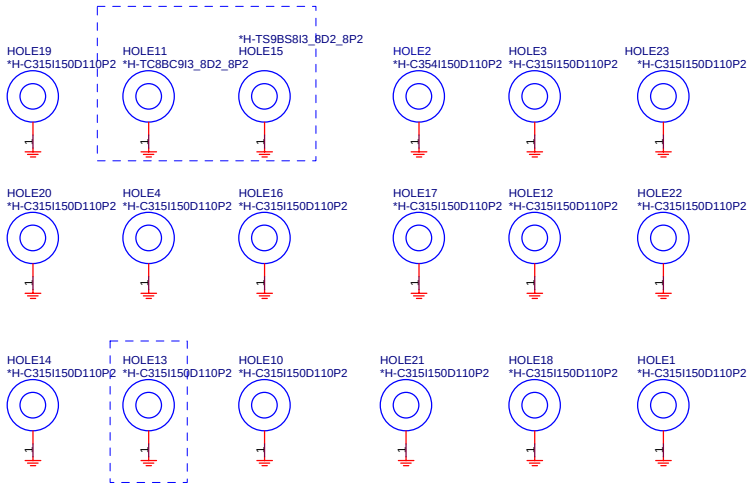

TV-Board fixing Nut

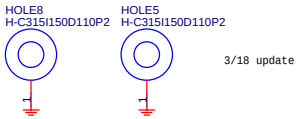

CPU SOCKET

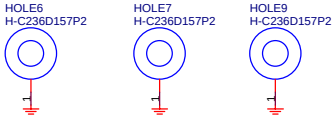

PROJECT : ED2L
Quanta Computer Inc.

Size	Document Number	Rev
	CRT & TV Connector	E3A

Date: Wednesday, March 23, 2005 Sheet 19 of 38

SATA HDD

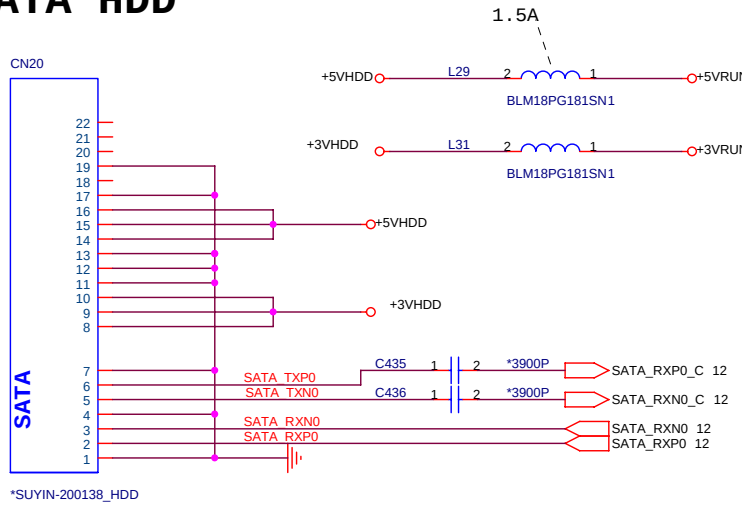

PATA HDD

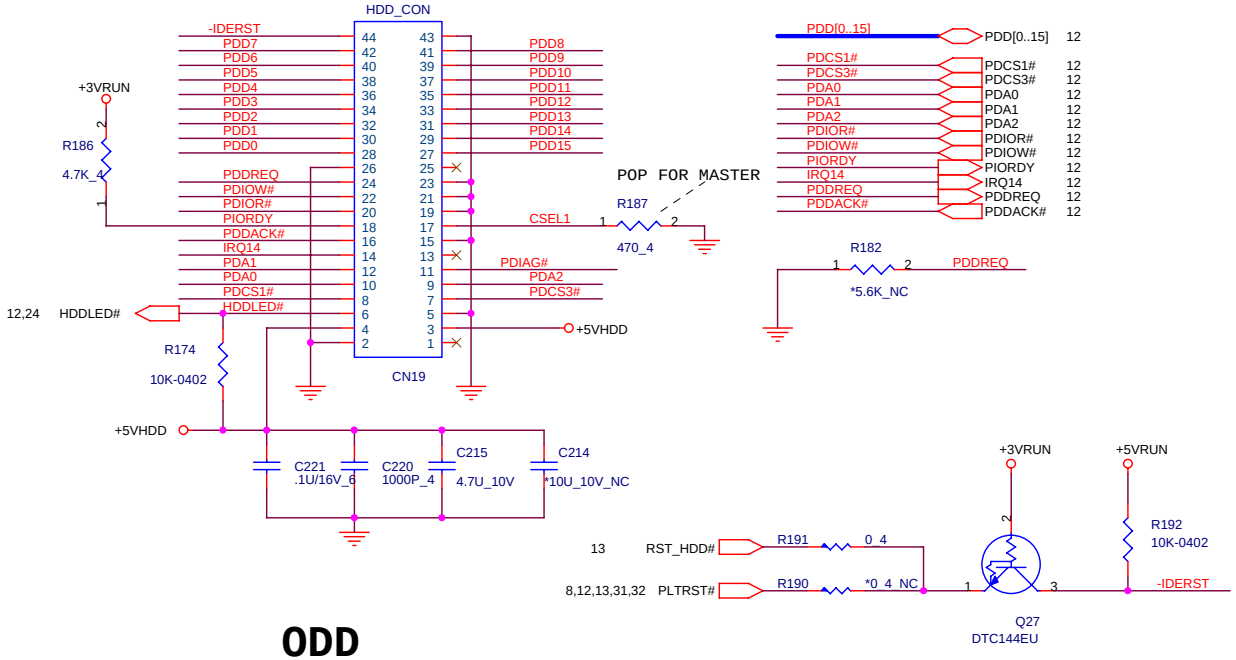

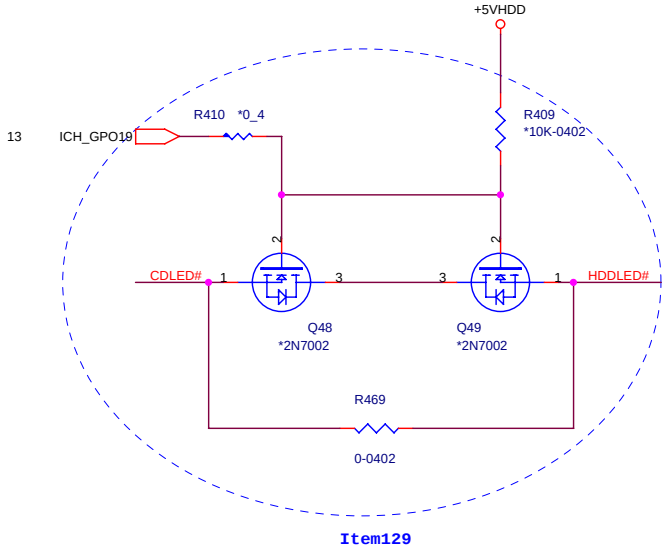

ODD

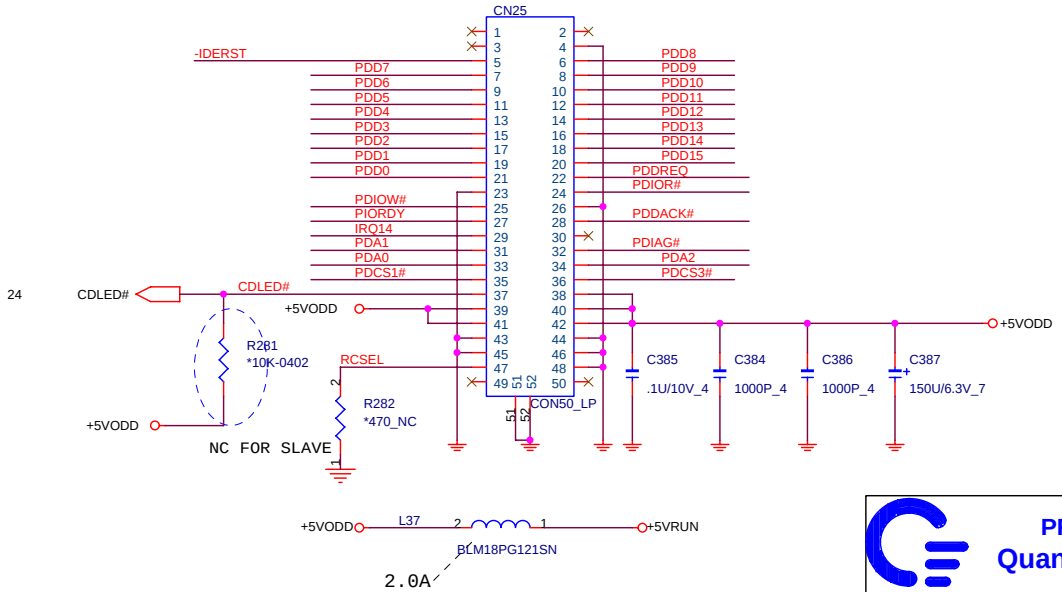

PROJECT : ED2L
Quanta Computer Inc.

Size	Document Number	Rev
	HDD & CDROM Connector	E3A

Date: Wednesday, March 23, 2005 Sheet 20 of 38

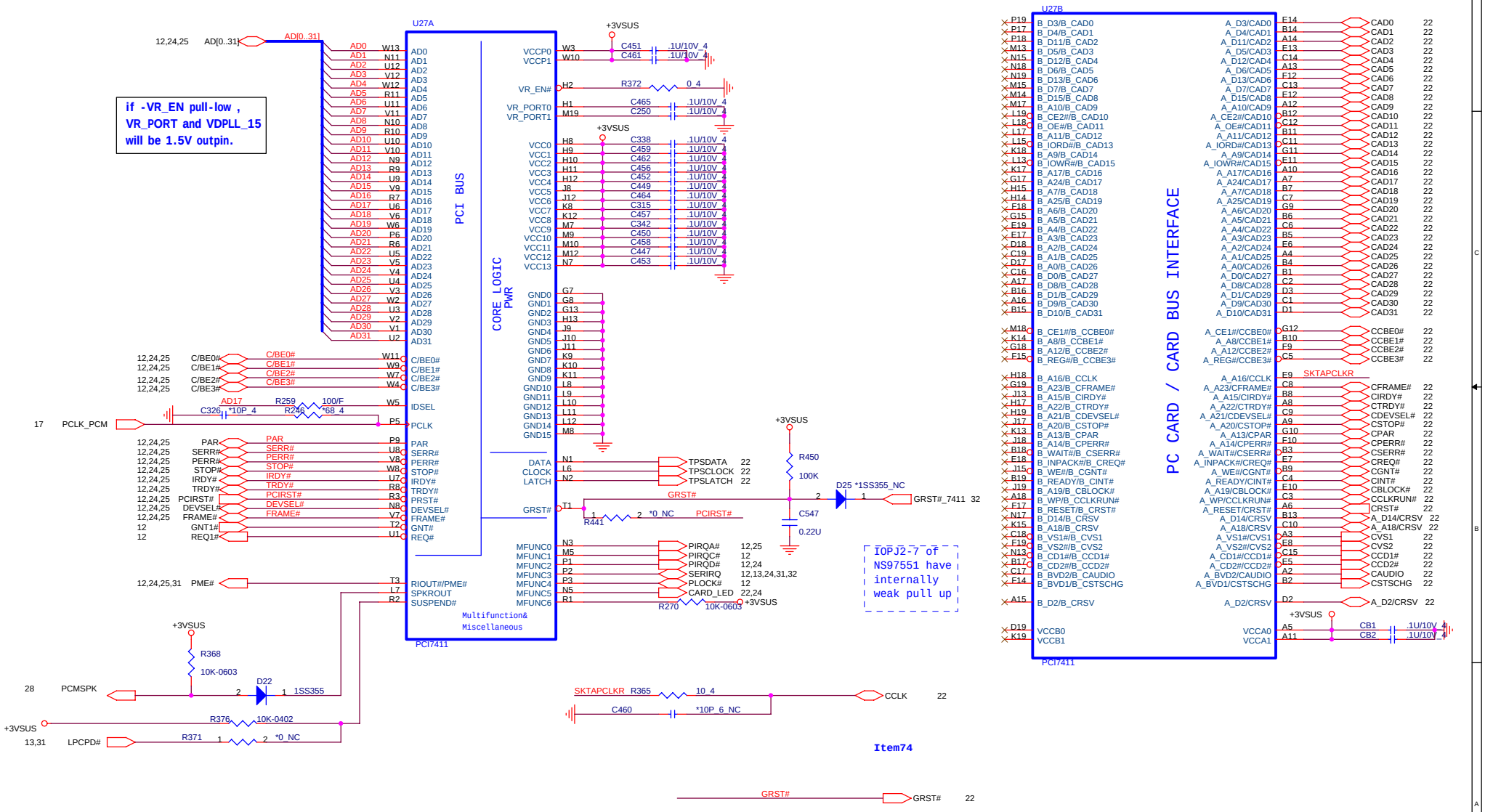

PROJECT : ED2L
Quanta Computer Inc.

Size	Document Number	Rev
	PCMCIA TI7411	E3A

Date: Wednesday, March 23, 2005 Sheet 21 of 38

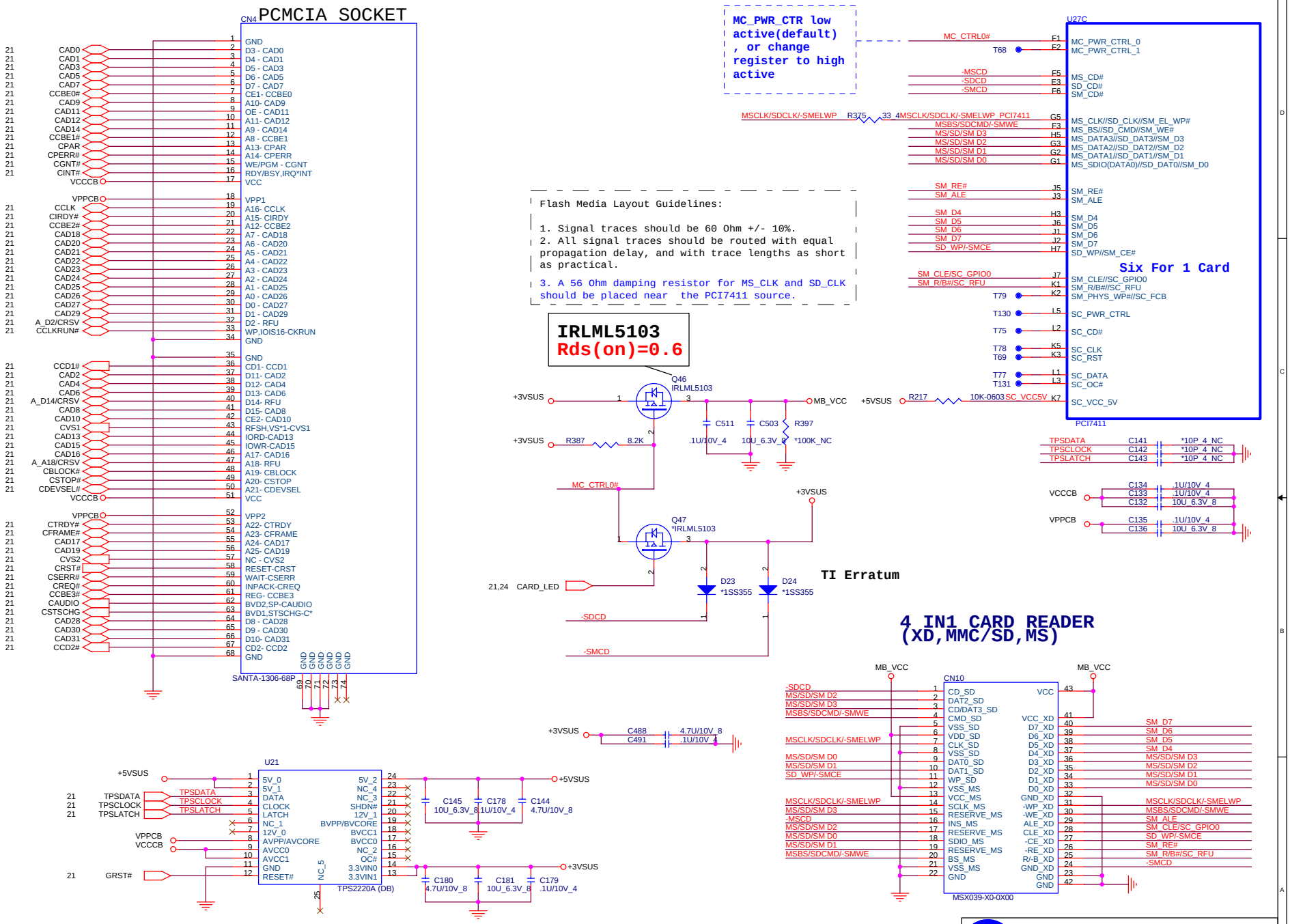

PROJECT : ED2L
Quanta Computer Inc.

Size	Document Number	Rev
	PCMCIA Socket & 4-IN-1	E3A

Date: Wednesday, March 23, 2005 Sheet 22 of 38

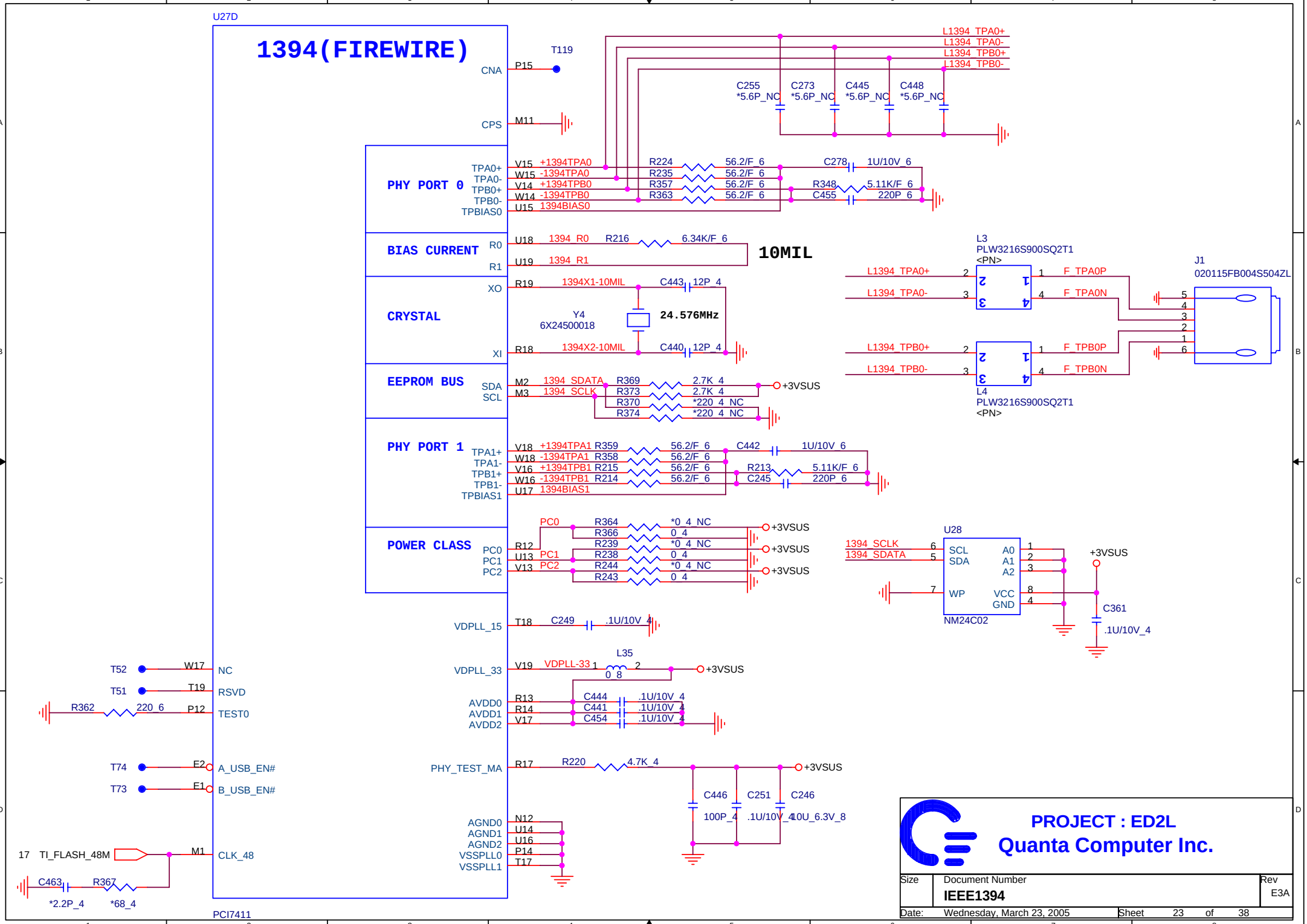
U27D
1394(FIREWIRE)
CNA
P15
T119
CPS
M11
L1394_TPA0+
L1394_TPA0-
L1394_TPB0+
L1394_TPB0-
C255 *5.6P_NC
C273 *5.6P_NC
C445 *5.6P_NC
C448 *5.6P_NC
PHY PORT 0
TPA0+ V15 +1394TPA0 R224 56.2/F_6 C278 1U/10V_6
TPA0- W15 -1394TPA0 R235 56.2/F_6
TPB0+ V14 +1394TPB0 R357 56.2/F_6 R348 5.11K/F_6
TPB0- W14 -1394TPB0 R363 56.2/F_6 C455 220P_6
TPBIAS0 U15 1394BIAS0
BIAS CURRENT
R0 U18 1394_R0 R216 6.34K/F_6
R1 U19 1394_R1
10MIL
CRYSTAL
XO R19 1394X1-10MIL C443 12P_4
Y4 6X24500018 24.576MHz
XI R18 1394X2-10MIL C440 12P_4
EEPROM BUS
SDA M2 1394_SDATA R369 2.7K_4
SCL M3 1394_SCLK R373 2.7K_4
R370 *220_4_NC
R374 *220_4_NC
+3VSUS
PHY PORT 1
TPA1+ V18 +1394TPA1 R359 56.2/F_6 C442 1U/10V_6
TPA1- W18 -1394TPA1 R358 56.2/F_6
TPB1+ V16 +1394TPB1 R215 56.2/F_6 R213 5.11K/F_6
TPB1- W16 -1394TPB1 R214 56.2/F_6 C245 220P_6
TPBIAS1 U17 1394BIAS1
POWER CLASS
PC0 R12 PC0 R364 *0_4_NC R366 0_4
PC1 U13 PC1 R239 *0_4_NC R238 0_4
PC2 V13 PC2 R244 *0_4_NC R243 0_4
+3VSUS
VDPLL_15 T18 C249 .1U/10V_4
VDPLL_33 V19 VDPLL-33 L35 0_8
AVDD0 R13 C444 .1U/10V_4
AVDD1 R14 C441 .1U/10V_4
AVDD2 V17 C454 .1U/10V_4
PHY_TEST_MA R17 R220 4.7K_4
C446 100P_4 C251 .1U/10V_4 C246 10U_6.3V_8
AGND0 N12
AGND1 U14
AGND2 U16
VSSPLL0 P14
VSSPLL1 T17
T52 W17 NC
T51 T19 RSVD
R362 220_6 P12 TEST0
T74 E2 A_USB_EN#
T73 E1 B_USB_EN#
17 TI_FLASH_48M M1 CLK_48
C463 *2.2P_4 R367 *68_4
PCI7411
L3 PLW3216S900SQ2T1 <PN>
L4 PLW3216S900SQ2T1 <PN>
L1394_TPA0+ 2 1 F_TPA0P
L1394_TPA0- 3 4 F_TPA0N
L1394_TPB0+ 2 1 F_TPB0P
L1394_TPB0- 3 4 F_TPB0N
J1 020115FB004S504ZL
U28 NM24C02
1394_SCLK 6 SCL
1394_SDATA 5 SDA
7 WP
A0 1
A1 2
A2 3
VCC 8
GND 4
+3VSUS
C361 .1U/10V_4
PROJECT : ED2L
Quanta Computer Inc.
Size
Document Number
IEEE1394
Rev
E3A
Date: Wednesday, March 23, 2005
Sheet 23 of 38

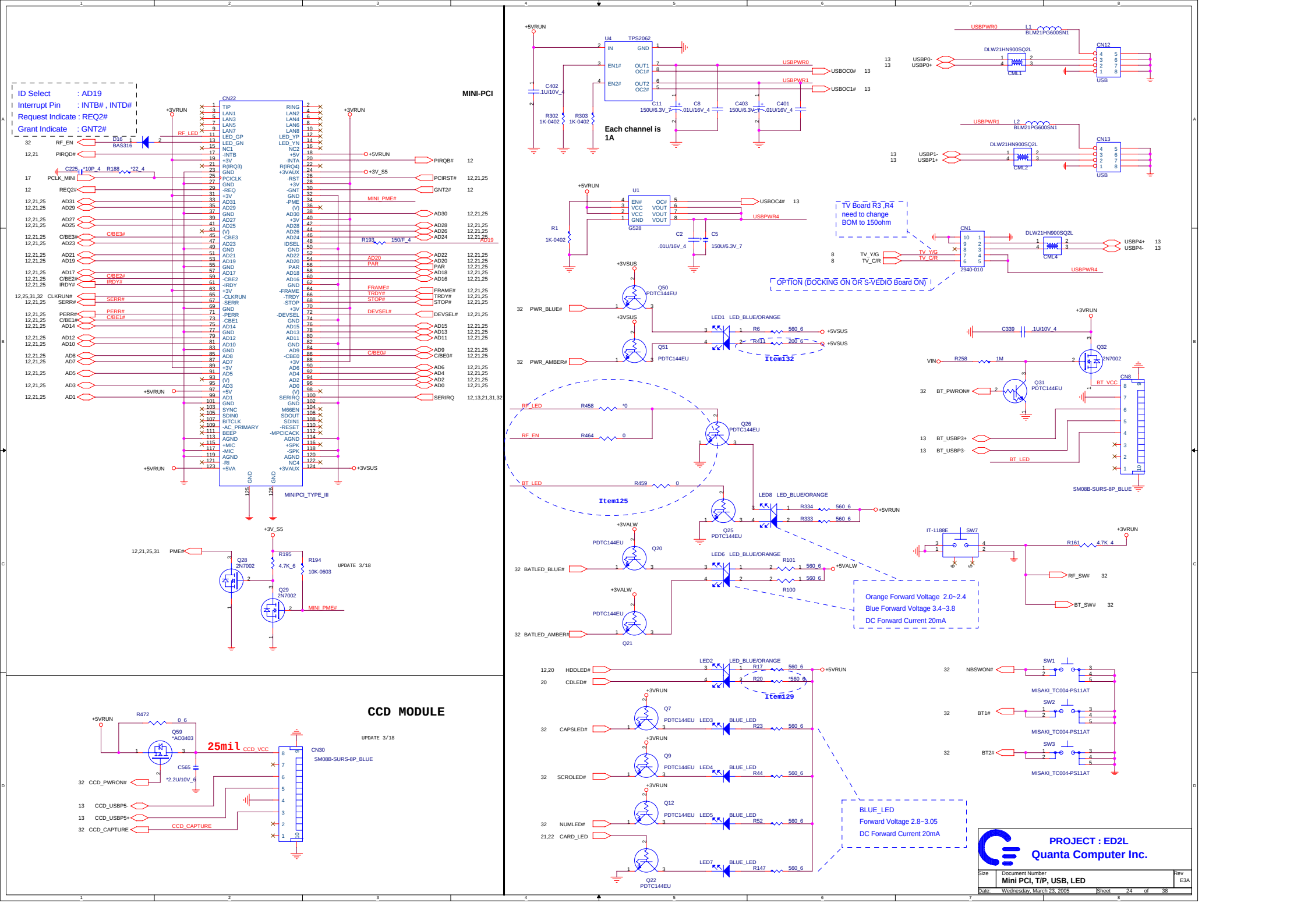
ID Select : AD19
Interrupt Pin : INTB# , INTD#
Request Indicate : REQ2#
Grant Indicate : GNT2#
MINI-PCI
CN22
MINIPCI_TYPE_III
Each channel is 1A
TPS2062
TV Board R3 ,R4 need to change BOM to 150ohm
OPTION (DOCKING ON OR S-VEDIO Board ON)
Item132
Item125
Item129
Orange Forward Voltage 2.0~2.4
Blue Forward Voltage 3.4~3.8
DC Forward Current 20mA
BLUE_LED
Forward Voltage 2.8~3.05
DC Forward Current 20mA
CCD MODULE
25mil
SM08B-SURS-8P_BLUE
MISAKI_TC004-PS11AT
PROJECT : ED2L
Quanta Computer Inc.
Mini PCI, T/P, USB, LED
Wednesday, March 23, 2005

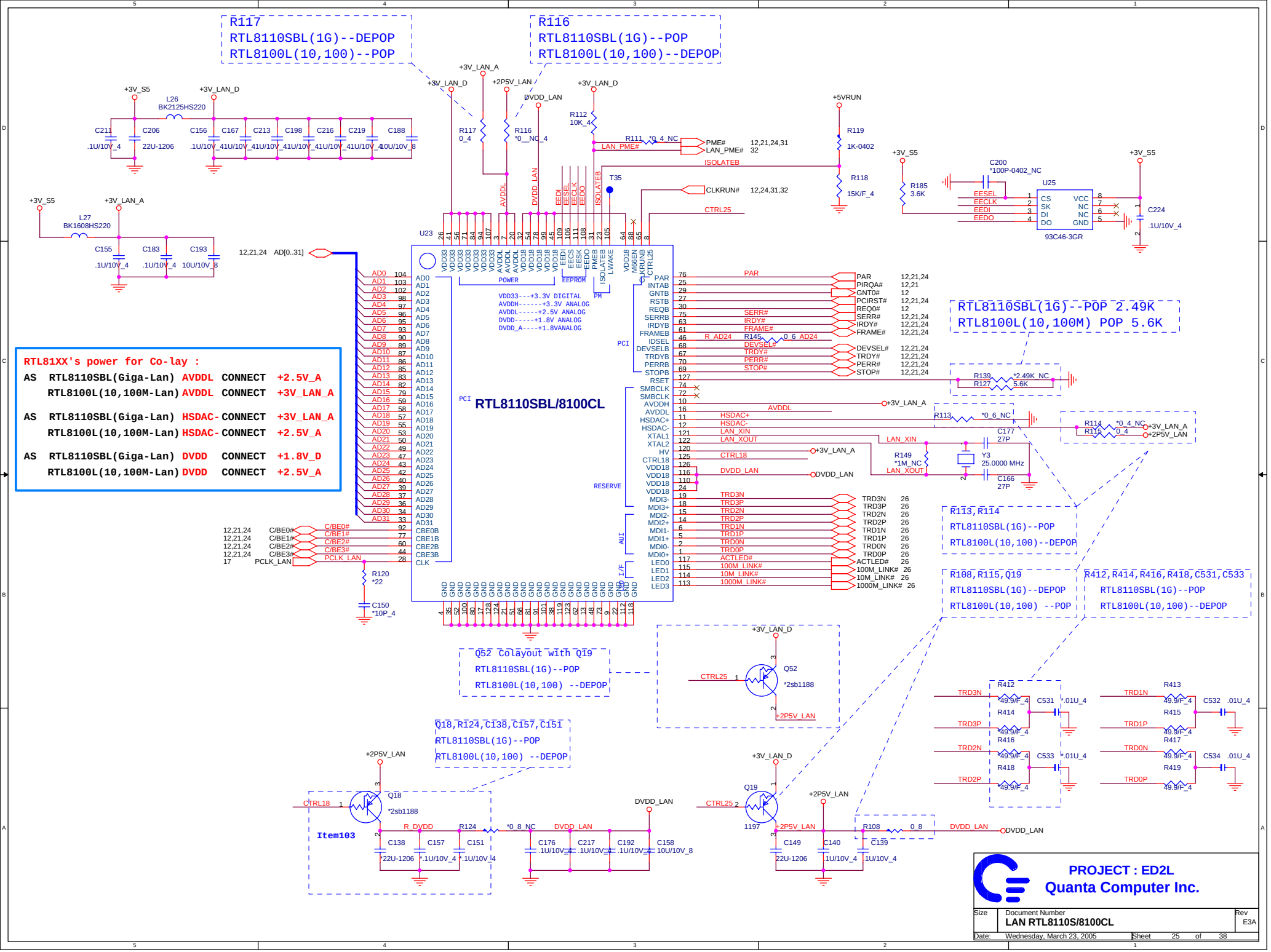
R117
RTL8110SBL(1G)--DEPOP
RTL8100L(10,100)--POP
R116
RTL8110SBL(1G)--POP
RTL8100L(10,100)--DEPOP
RTL81XX's power for Co-lay :
AS RTL8110SBL(Giga-Lan) AVDDL CONNECT +2.5V_A
RTL8100L(10,100M-Lan) AVDDL CONNECT +3V_LAN_A
AS RTL8110SBL(Giga-Lan) HSDAC- CONNECT +3V_LAN_A
RTL8100L(10,100M-Lan) HSDAC- CONNECT +2.5V_A
AS RTL8110SBL(Giga-Lan) DVDD CONNECT +1.8V_D
RTL8100L(10,100M-Lan) DVDD CONNECT +2.5V_A
RTL8110SBL/8100CL
U23
VDD33---+3.3V DIGITAL
AVDDH------+3.3V ANALOG
AVDDL-----+2.5V ANALOG
DVDD-----+1.8V ANALOG
DVDD_A----+1.8VANALOG
RTL8110SBL(1G)--POP 2.49K
RTL8100L(10,100M) POP 5.6K
R113,R114
RTL8110SBL(1G)--POP
RTL8100L(10,100)--DEPOP
R108,R115,Q19
RTL8110SBL(1G)--DEPOP
RTL8100L(10,100) --POP
R412,R414,R416,R418,C531,C533
RTL8110SBL(1G)--POP
RTL8100L(10,100)--DEPOP
Q52 Colayout with Q19
RTL8110SBL(1G)--POP
RTL8100L(10,100) --DEPOP
Q18,R124,C138,C157,C151
RTL8110SBL(1G)--POP
RTL8100L(10,100) --DEPOP
Item103
PROJECT : ED2L
Quanta Computer Inc.
Size
Document Number
LAN RTL8110S/8100CL
Rev
E3A
Date: Wednesday, March 23, 2005
Sheet 25 of 38

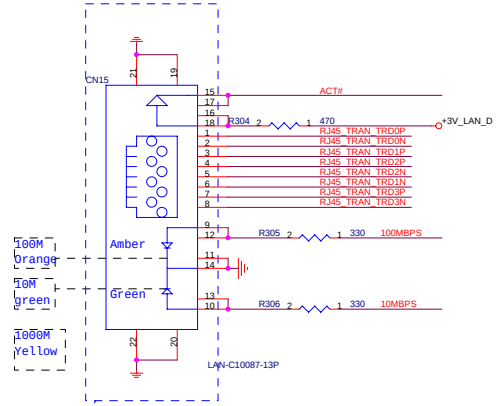

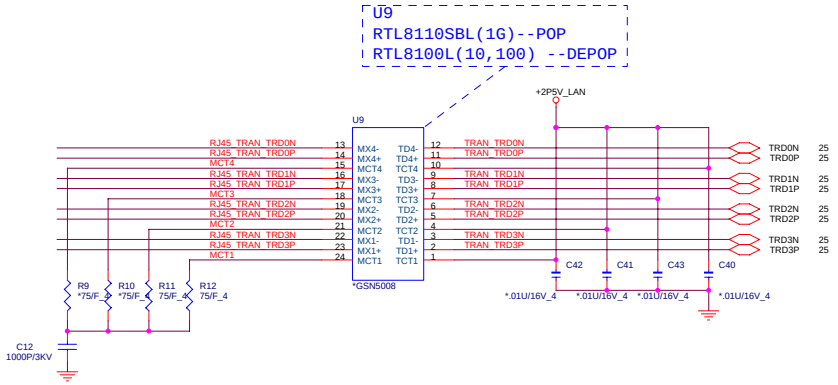

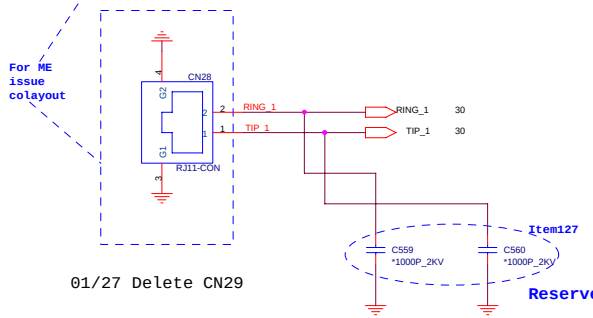

01/27 Delete CN29

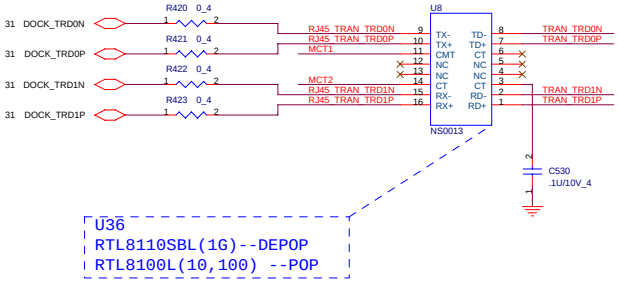

U36
RTL8110SBL(1G)--DEPOP
RTL8100L(10,100) --POP

	For RTL8100C	For RTL8110SB
R116	UN-POP	POP
R117	POP	UN-POP
R139	UN-POP	POP
R127	POP	UN-POP
R113	UN-POP	POP
R114	UN-POP	POP
R115	POP	UN-POP
R108	POP	UN-POP
R124	UN-POP	POP
C151	UN-POP	POP
C138	UN-POP	POP
C157	UN-POP	POP
Q52	UN-POP	POP
Q18	UN-POP	POP
Q19	POP	UN-POP
R412	UN-POP	POP
R414	UN-POP	POP
R416	UN-POP	POP
R418	UN-POP	POP
C531	UN-POP	POP
C533	UN-POP	POP
C40	UN-POP	POP
C41	UN-POP	POP
C42	UN-POP	POP
C43	UN-POP	POP
R9	UN-POP	POP
R10	UN-POP	POP
R420	POP	UN-POP
R421	POP	UN-POP
R422	POP	UN-POP
R423	POP	UN-POP
C530	POP	UN-POP
U8	POP	UN-POP
U9	UN-POP	POP
U44	POP	UN-POP
C556	POP	UN-POP
U3	POP	UN-POP
C399	POP	UN-POP

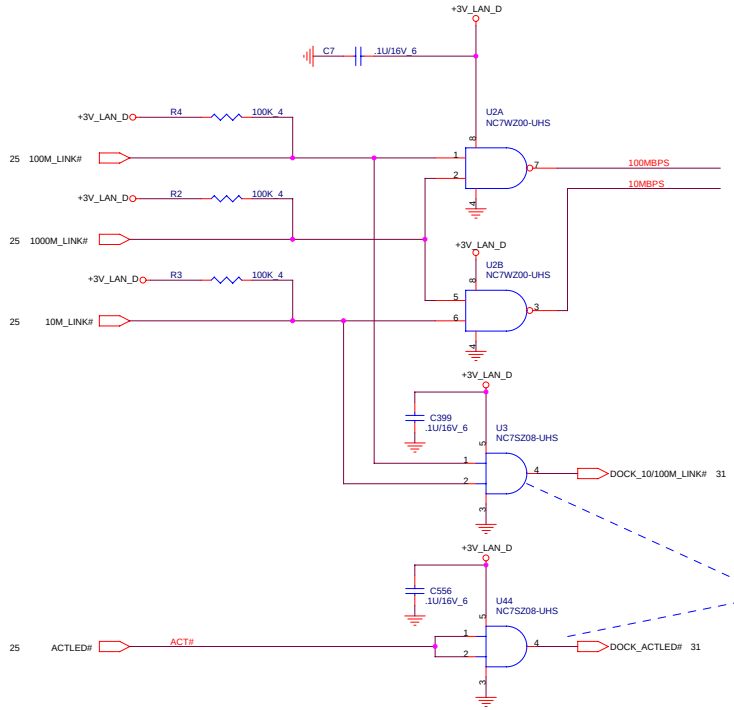

U44,U3,C399,C556
RTL8110SBL(1G)--DEPOP
RTL8100L(10,100) --POP

PROJECT : ED2L
Quanta Computer Inc.

Size	Document Number	Rev
	LAN Switch & Connector	E3A

Date: Wednesday, March 23, 2005 Sheet 26 of 38

FAN CONTROL

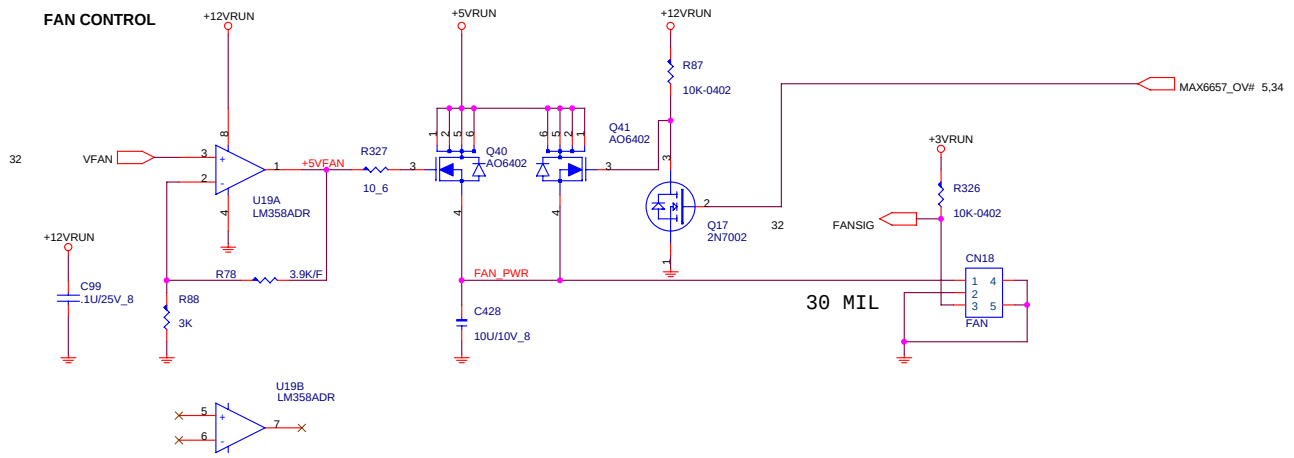

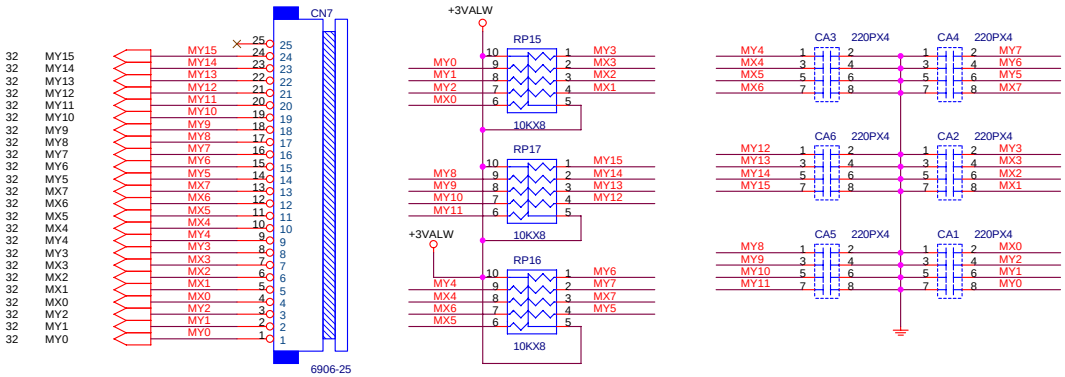

TOUCH PAD

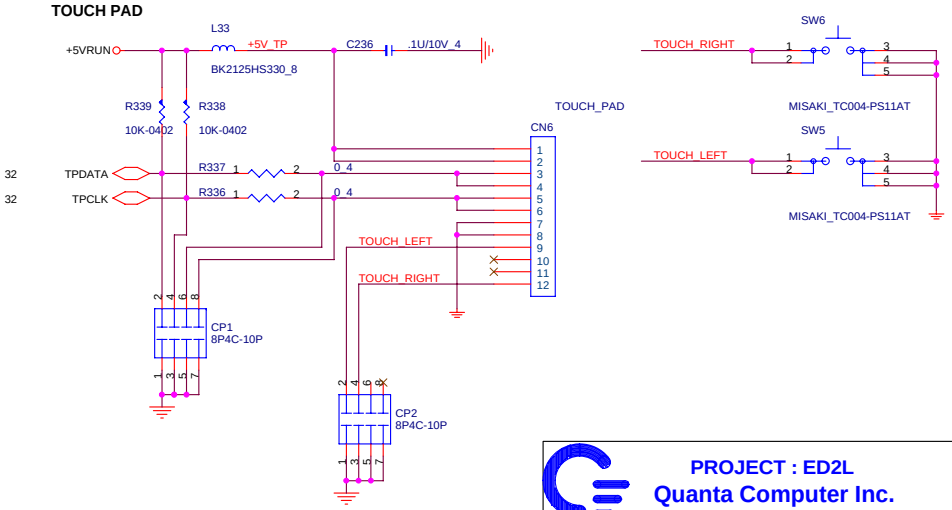

PROJECT : ED2L
Quanta Computer Inc.

Size	Document Number	Rev
	T/P, FAN, Switch, K/B	E3A

Date: Wednesday, March 23, 2005 Sheet 27 of 38

AC97 codec

For Layout:
Place decoupling caps near the power pins of Malibu device.

For Layout:
Place these resistors close to SmartAMCZ device.

For Layout:
Place near SmartAMCZ device

For Layout:
Place crystal and associated circuitry very near SmartAMCZ Device.

U40
20551-27P2
SAMART_AMC_HD

LINE IN/MIC IN

Item52
Docking side Phone jack-sense high active

For AC-Link Mode: An external 14.318MHz clock source can be used to replace the crystal circuitry shown here. It should be connected to XTALIN (pin 15). The XTALOUT (pin 16) should be left floating.

For HD Audio Mode: Do not populate crystal circuitry and leave XTALIN (pin 15) and XTALOUT (pin 16) floating.

Ground Tie

BEEP

U37 74AHCT1G86GW
U29 74AHCT1G08GW

AC97 codec Power

U38 800mA (30MIL)
AIC1117

PROJECT : ED2L
Quanta Computer Inc.

Size	Document Number	Rev
	AC97 CODEC + MODEM	E3A

Date: Wednesday, March 23, 2005 Sheet 28 of 38

GAIN	SPKR MODE	HP MODE
0	10.5	3
1	9	0

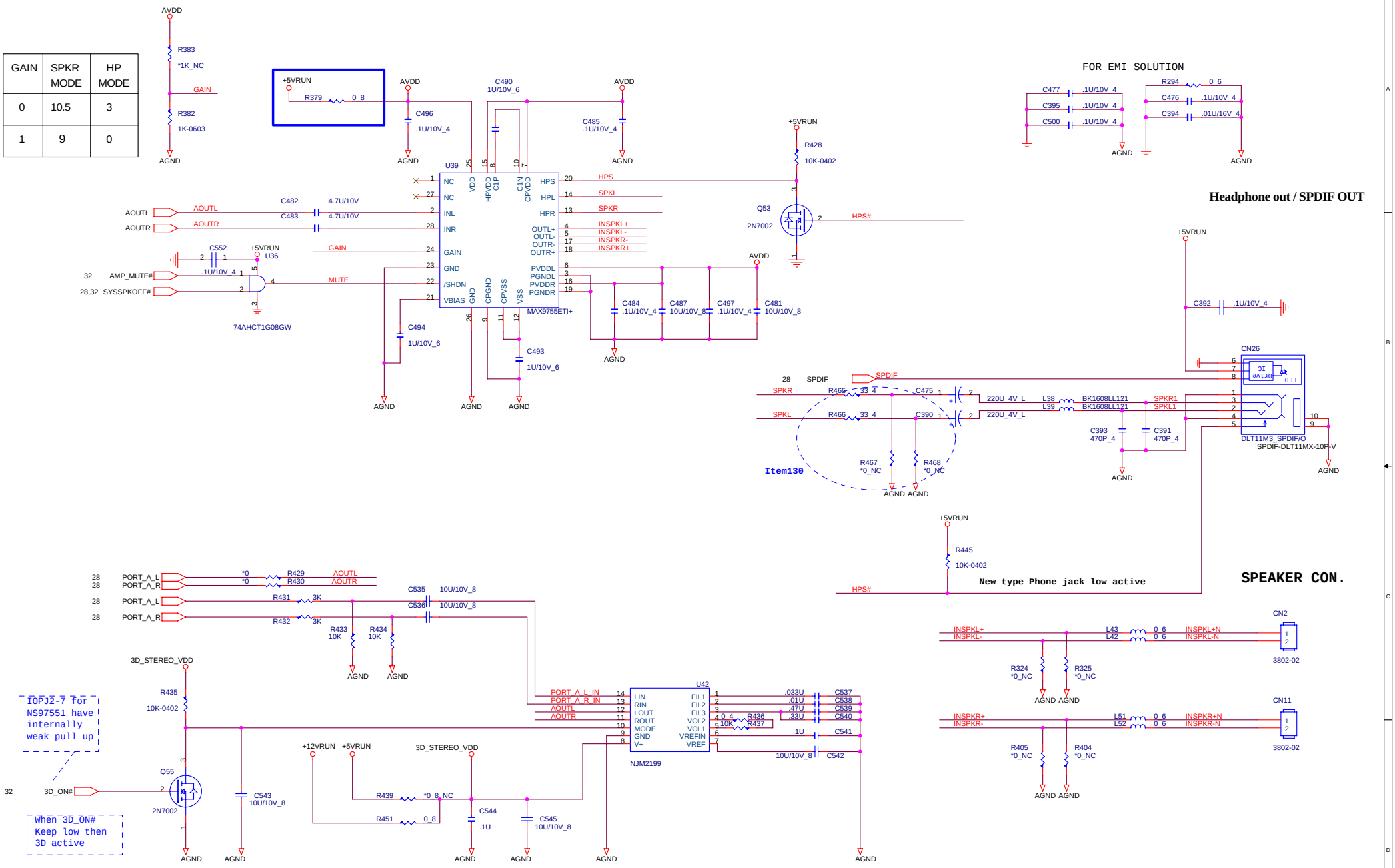

PROJECT : ED2L

Quanta Computer Inc.

Size	Document Number	Rev
	Audio Amplifier & Jack	E3A

Date: Wednesday, March 23, 2005 Sheet 29 of 38

Revision History

REV	Description	Date
00	Initial Release	February 14, 2002
01	27mmx27mm form factor.	July 5, 2002
02	6 pins J1 connector-T/R traces for specific uses-100V C902/C904	September 24, 2002
03	add J1B - remove T903	October 9, 2002
04	Change J1 & J1B. Change R938 size. Add TP60 to TP71.	November 12, 2002
05	Removed J1B. Change size for C978, C984, R902, R904, R906, R908, R910 and R978. Changed BR904 and BR906 to different manufacture.	November 26, 2002
06	Corrected error in Q904 PCB footprint.	January 3, 2003
07	Added DIB data transformer footprint, added MC966, deleted ring impedance circuit. Added the letter "M" prefix to all reference designators.	September 24, 2003
08	Changed value for MC966 from 3.3nF to 10nF, 100V, +/-20%, Y5V. By default, MC966 will be populated. Also, changed CX20493 revision from 11 to 21.	November 06, 2003

REV:B MODIFY FOR USE
NEW MODEM MODULE

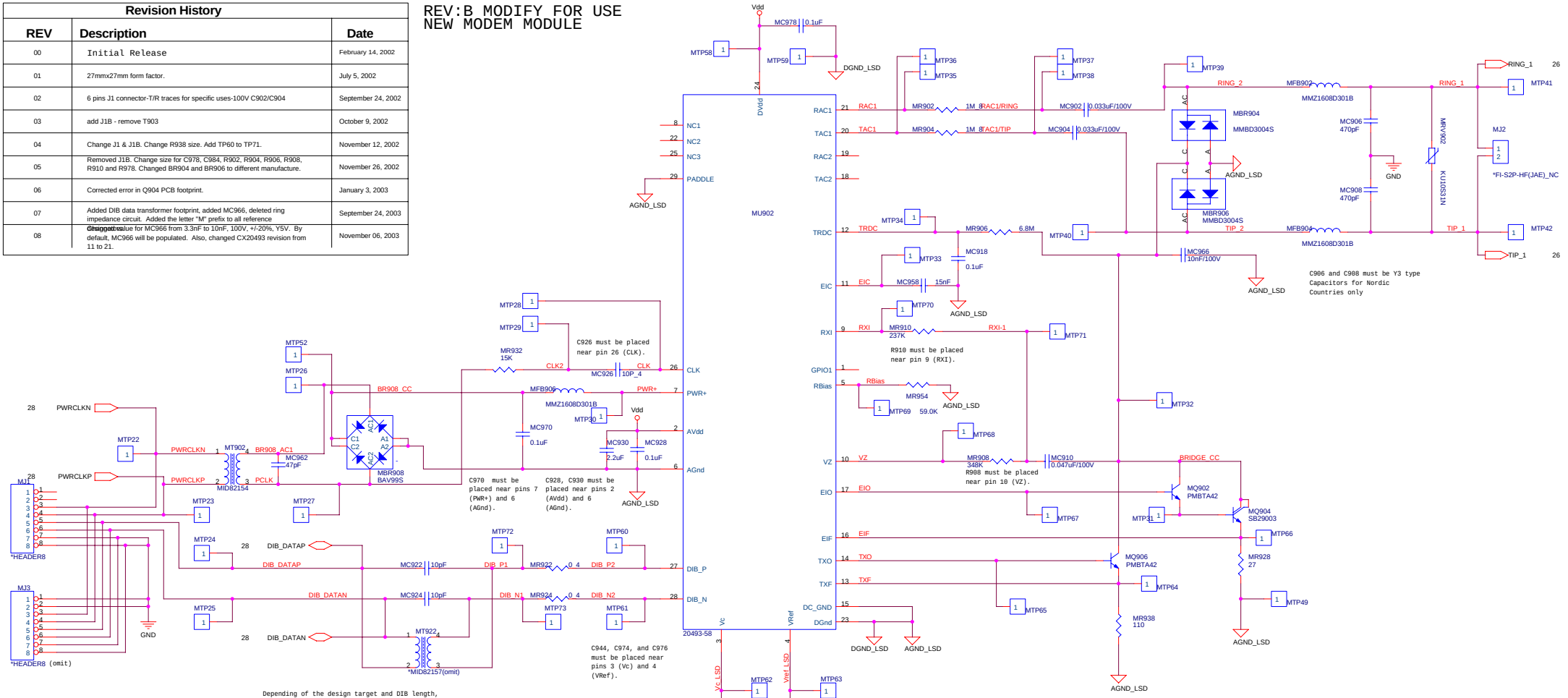

PROJECT : ED2L
Quanta Computer Inc.

Size	Document Number	Rev
	MODEM DAA	E3A
Date: Wednesday, March 23, 2005	Sheet 30 of 38	

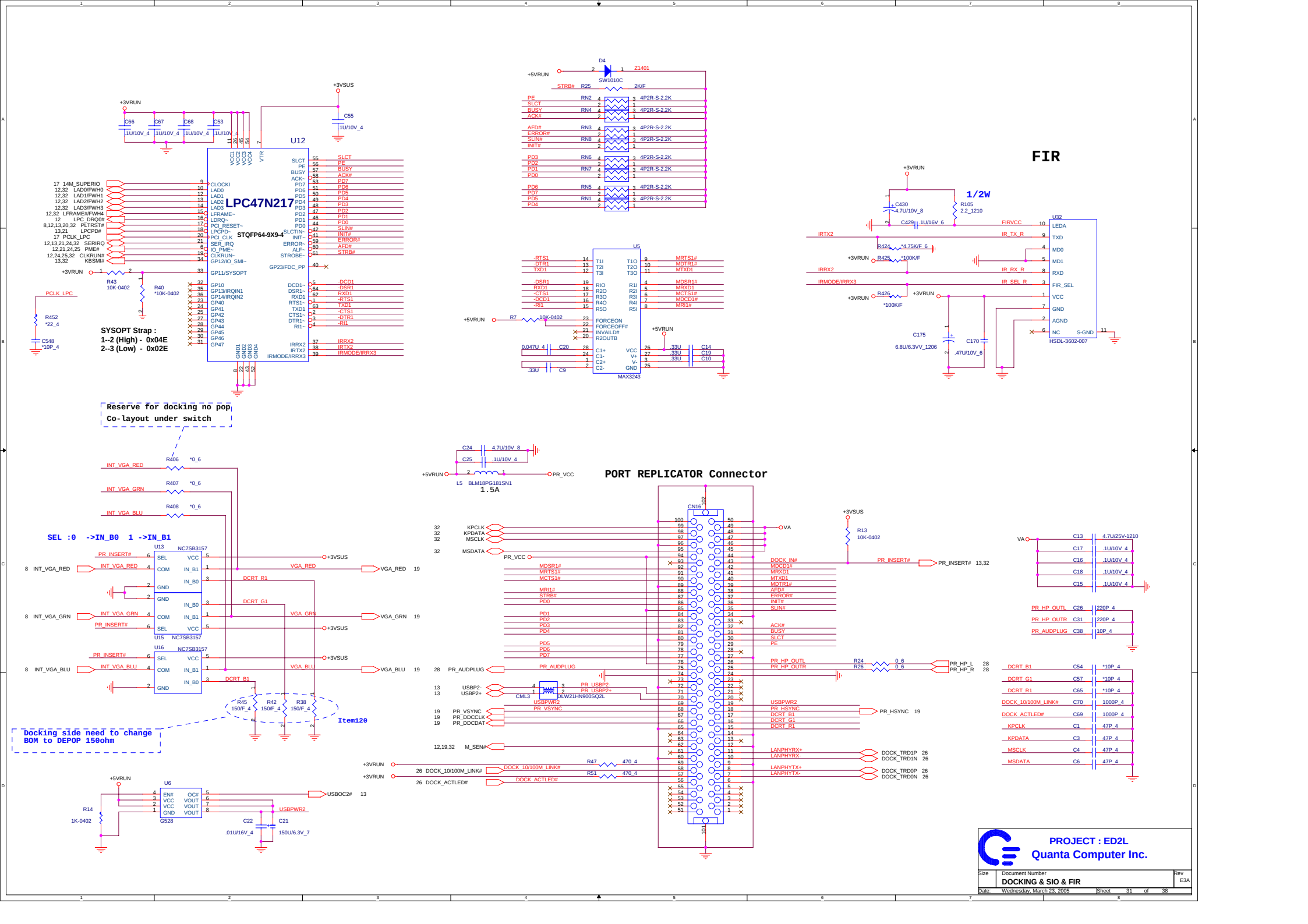
U12
LPC47N217
STQFP64-9X9-4
SYSOPT Strap :
1--2 (High) - 0x04E
2--3 (Low) - 0x02E
Reserve for docking no pop
Co-layout under switch
SEL :0 ->IN_B0 1 ->IN_B1
Docking side need to change
BOM to DEPOP 150ohm
Item120
U13 NC7SB3157
U15 NC7SB3157
U16 NC7SB3157
U6 G528
U5 MAX3243
D4 SW1010C
Z1401
FIR
1/2W
U32 HSDL-3602-007
PORT REPLICATOR Connector
CN16
L5 BLM18PG181SN1
1.5A
PROJECT : ED2L
Quanta Computer Inc.
Size
Document Number
DOCKING & SIO & FIR
Rev
E3A
Date: Wednesday, March 23, 2005
Sheet 31 of 38

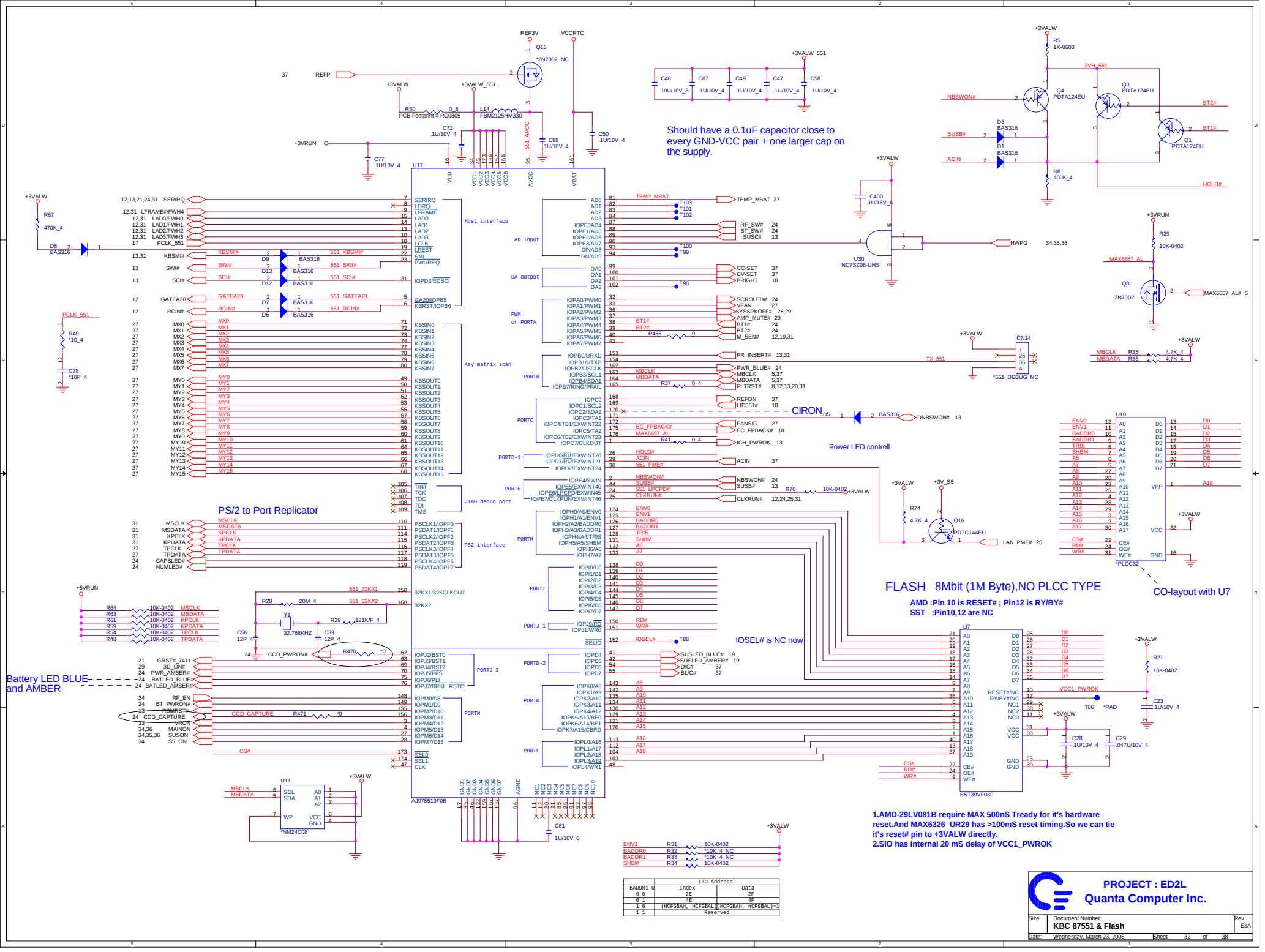
Should have a 0.1uF capacitor close to every GND-VCC pair + one larger cap on the supply.
PS/2 to Port Replicator
Battery LED BLUE and AMBER
Power LED controll
IOSEL# is NC now
FLASH 8Mbit (1M Byte),NO PLCC TYPE
AMD :Pin 10 is RESET# ; Pin12 is RY/BY#
SST :Pin10,12 are NC
CO-layout with U7
1.AMD-29LV081B require MAX 500nS Tready for it's hardware reset.And MAX6326_UR29 has >100mS reset timing.So we can tie it's reset# pin to +3VALW directly.
2.SIO has internal 20 mS delay of VCC1_PWROK
PROJECT : ED2L
Quanta Computer Inc.
KBC 87551 & Flash
Rev E3A
Date: Wednesday, March 23, 2005
Sheet 32 of 38

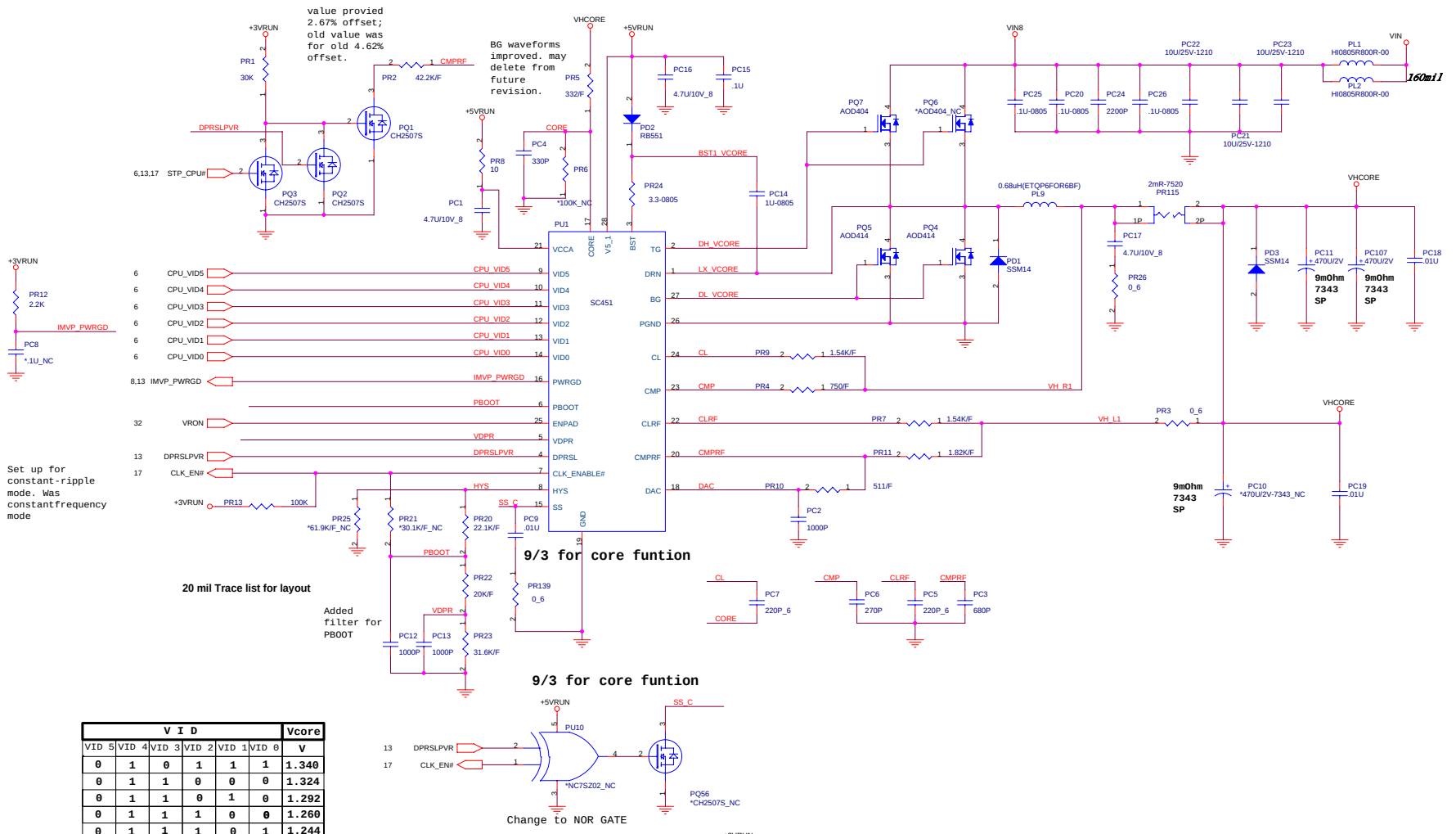

V I D						Vcore
VID 5	VID 4	VID 3	VID 2	VID 1	VID 0	V
0	1	0	1	1	1	1.340
0	1	1	0	0	0	1.324
0	1	1	0	1	0	1.292
0	1	1	1	0	0	1.260
0	1	1	1	0	1	1.244
0	1	1	1	1	1	1.212
1	0	0	0	0	1	1.180
1	0	0	0	1	1	1.148
1	0	0	1	1	0	1.100
1	0	1	0	0	1	1.052
1	0	1	0	1	1	1.020
1	0	1	1	1	0	0.972
1	1	0	0	0	0	0.940

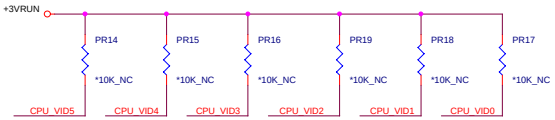

PROJECT : ED2L

Quanta Computer Inc.

Size	Document Number	Rev
	CPU CORE (SC451)	E3A

Date: Wednesday, March 23, 2005 Sheet 33 of 38

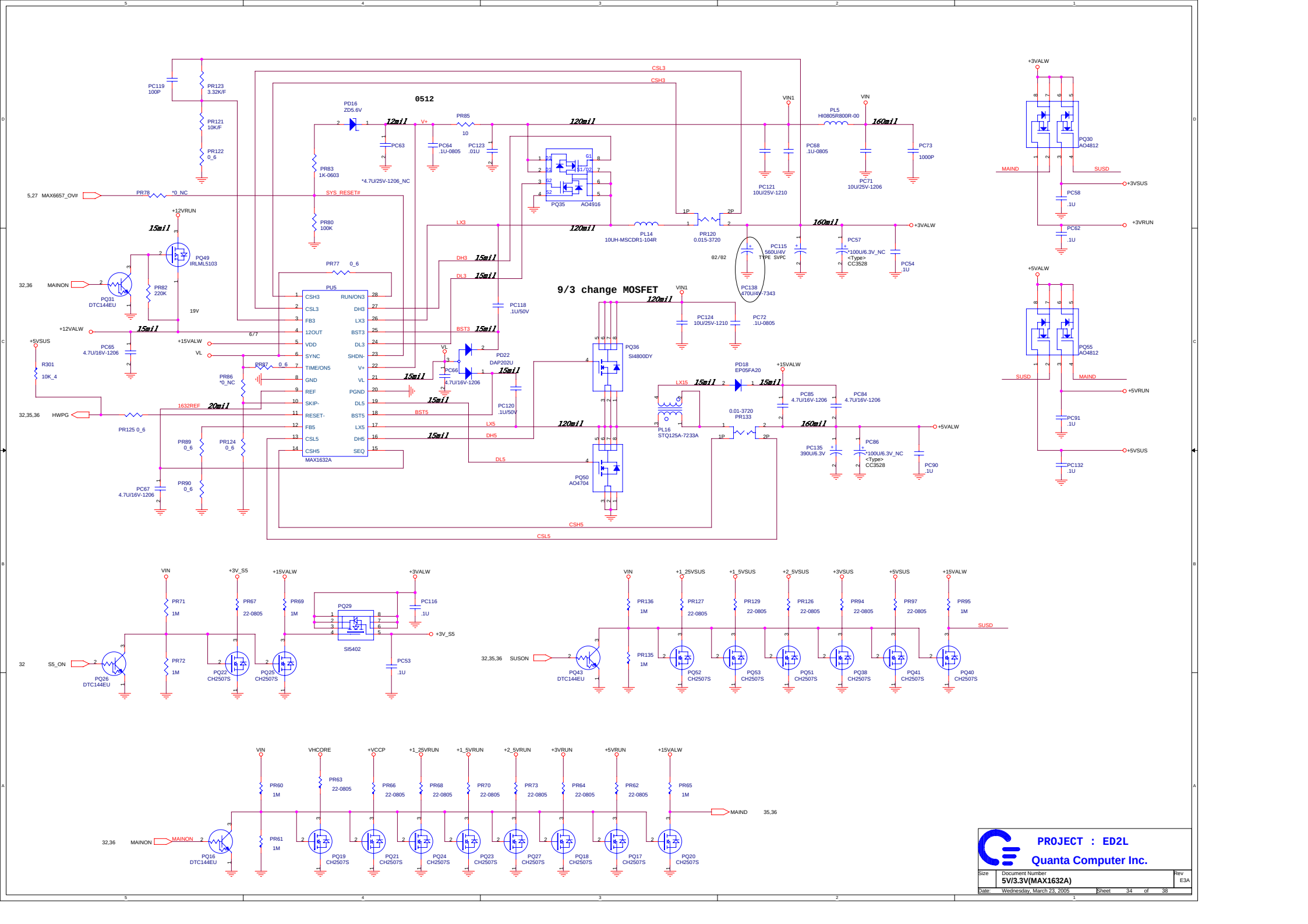
0512
9/3 change MOSFET
MAX1632A
PU5
PQ36 SI4800DY
PQ50 AO4704
PQ35 AO4916
PQ49 IRLML5103
PQ31 DTC144EU
PQ30 AO4812
PQ55 AO4812
PL14 10UH-MSCDR1-104R
PL16 STQ125A-7233A
PL5 HI0805R800R-00
PR120 0.015-3720
PR133 0.01-3720
PC138 470U/4V-7343
PD16 ZD5.6V
PD22 DAP202U
PD18 EP05FA20
PQ29 SI5402
PQ26 DTC144EU
PQ22 CH2507S
PQ25 CH2507S
PQ43 DTC144EU
PQ52 CH2507S
PQ53 CH2507S
PQ51 CH2507S
PQ38 CH2507S
PQ41 CH2507S
PQ40 CH2507S
PQ16 DTC144EU
PQ19 CH2507S
PQ21 CH2507S
PQ24 CH2507S
PQ23 CH2507S
PQ27 CH2507S
PQ18 CH2507S
PQ17 CH2507S
PQ20 CH2507S
VIN
VIN1
+3VALW
+5VALW
+15VALW
+12VALW
+12VRUN
+5VSUS
+3VSUS
+3VRUN
+5VRUN
+5VRUN
+3_S5
+1_25VSUS
+1_5VSUS
+2_5VSUS
+3VSUS
+5VSUS
VHCORE
+VCCP
+1_25VRUN
+1_5VRUN
+2_5VRUN
+3VRUN
MAINON
MAIND
SUSON
SUSD
S5_ON
HWPG
MAX6657_OV#
SYS_RESET#
1632REF
CSL3
CSH3
CSH5
CSL5
DH3
DL3
BST3
LX3
DH5
DL5
BST5
LX5
LX15
VL
V+
PROJECT : ED2L
Quanta Computer Inc.
Size
Document Number
5V/3.3V(MAX1632A)
Rev
E3A
Date: Wednesday, March 23, 2005
Sheet 34 of 38

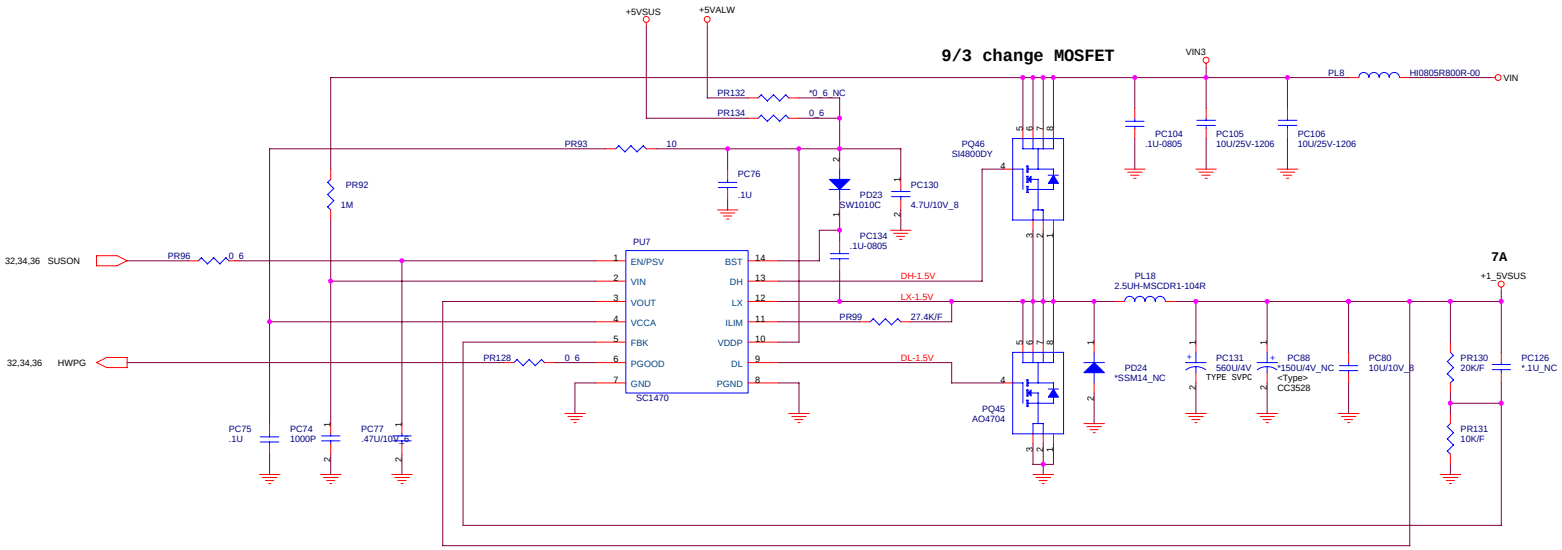

PROJECT : ED2L

Quanta Computer Inc.

Size	Document Number	Rev
	2.5VSUS / +1.25TERM	E3A

Date: Wednesday, March 23, 2005 Sheet 35 of 38

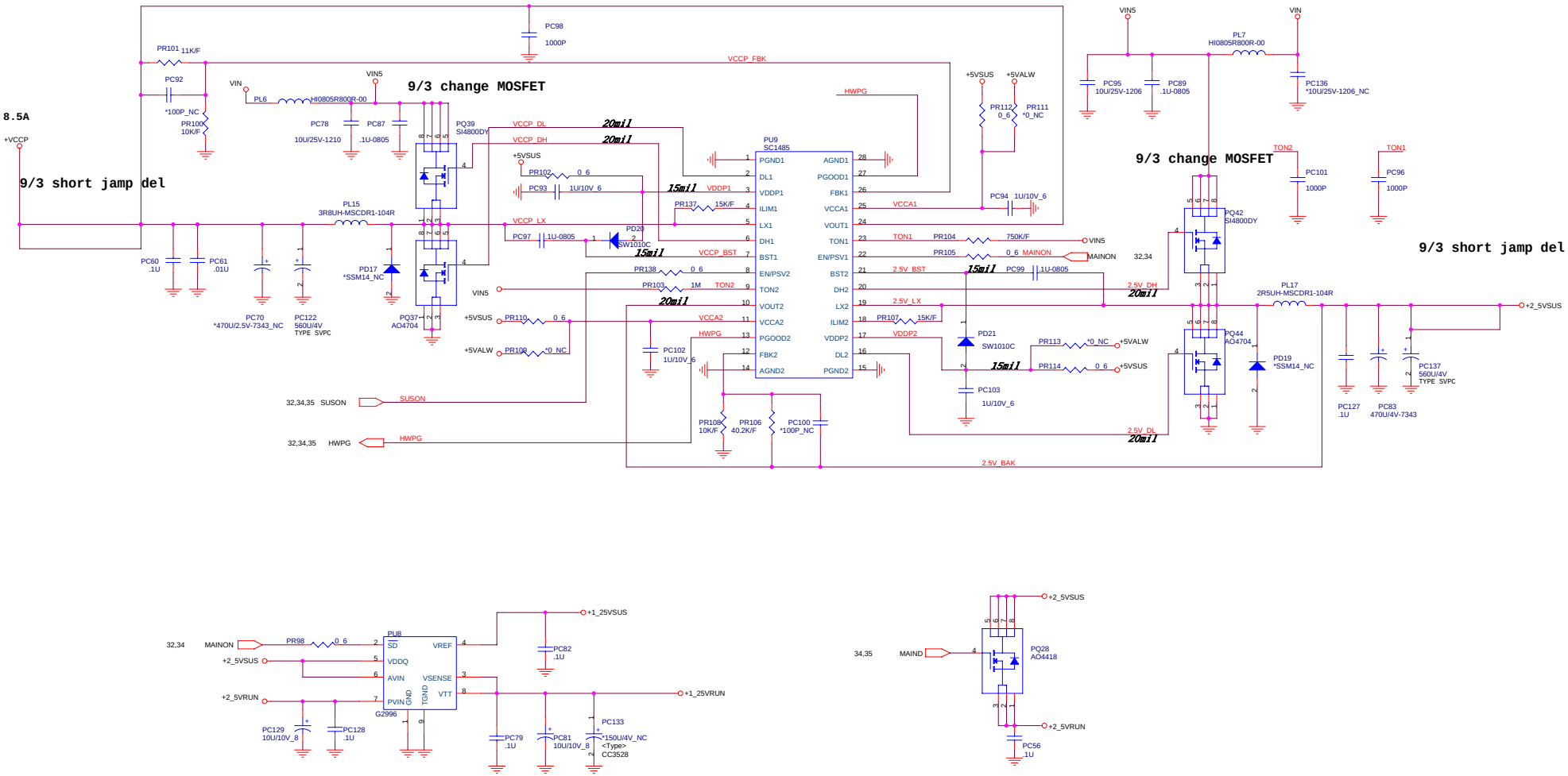

PROJECT : ED2L

Quanta Computer Inc.

Size	Document Number	Rev
	+VCCP/+1.25V/+2.5V	E3A

Date: Wednesday, March 23, 2005 Sheet 36 of 38

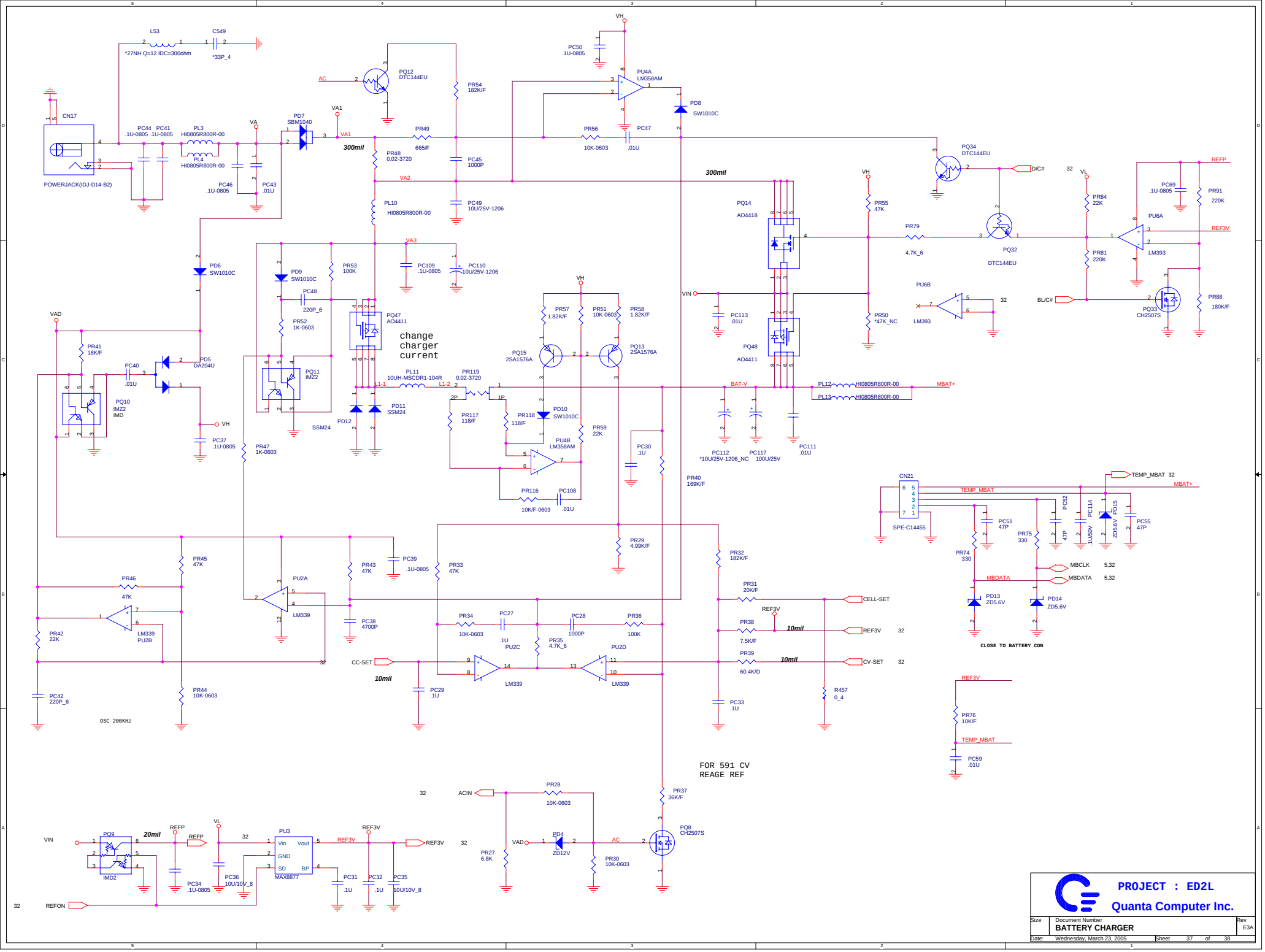

PROJECT : ED2L

Quanta Computer Inc.

Size	Document Number	Rev
	BATTERY CHARGER	E3A

Date: Wednesday, March 23, 2005 Sheet 37 of 38

MODEL	REV	CHANGE LIST
	1A	Preliminary Release

Model / Page	JM2 MB FM	JM2 MB TO
1		
2	1A	
3		
4		
5		
6		
7		
8		
9		
10		
11		
12		
13		
14		
15		
16		
17		
18		
19		
20		
21		
22		
23		
24		
25		
26		
27		
28		
29		
30		
31		
32		
33		
34		
35		
36		
37		
38		
39		
40		
41		
42		
43		
44		
45		
46		
47		
48		
49		

QUANTA COMPUTER

PROJECT : DM3B	DOC. NO. ???	REV: 1A	ASSY:	
APPROVED BY :	CHECKED BY:	DRAWN BY :	DATE :	SHEET 1 OF 1