BU1(Napa) Block Diagram

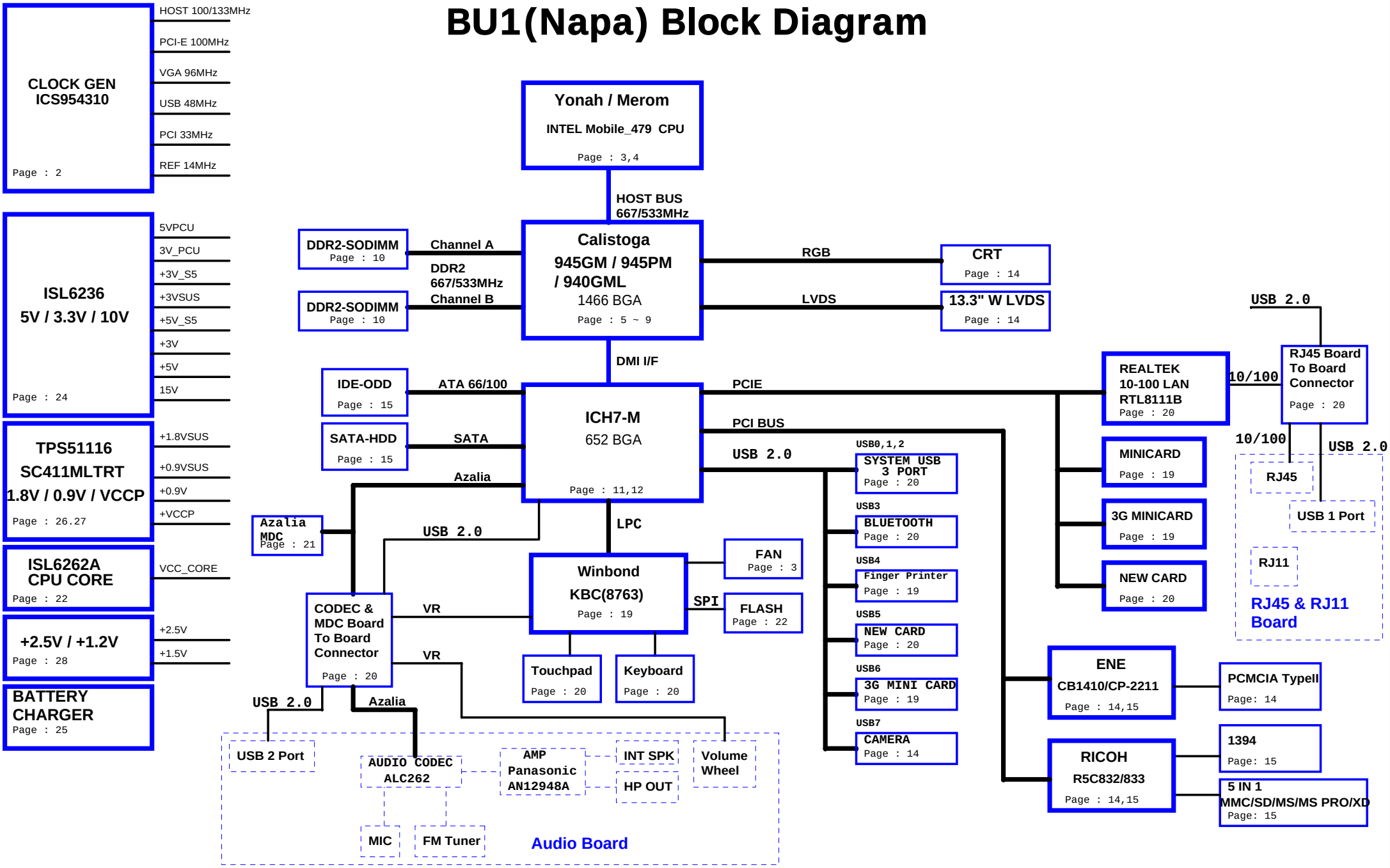

PCI ROUTING TABLE	IDSEL	INTERRUPT	DEVICE
REQ0# / GNT0#	AD17	INTA#,INTB#	Card Reader Controller
REQ1# / GNT1#	AD20	INTC#	Card Bus Controller

PROJECT : BU1(NAPA)
Quanta Computer Inc.

Size	Document Number	Rev
	BLOCK DIAGRAM	1C

Date: Tuesday, March 20, 2007 Sheet 1 of 28

CLOCK GENERATOR

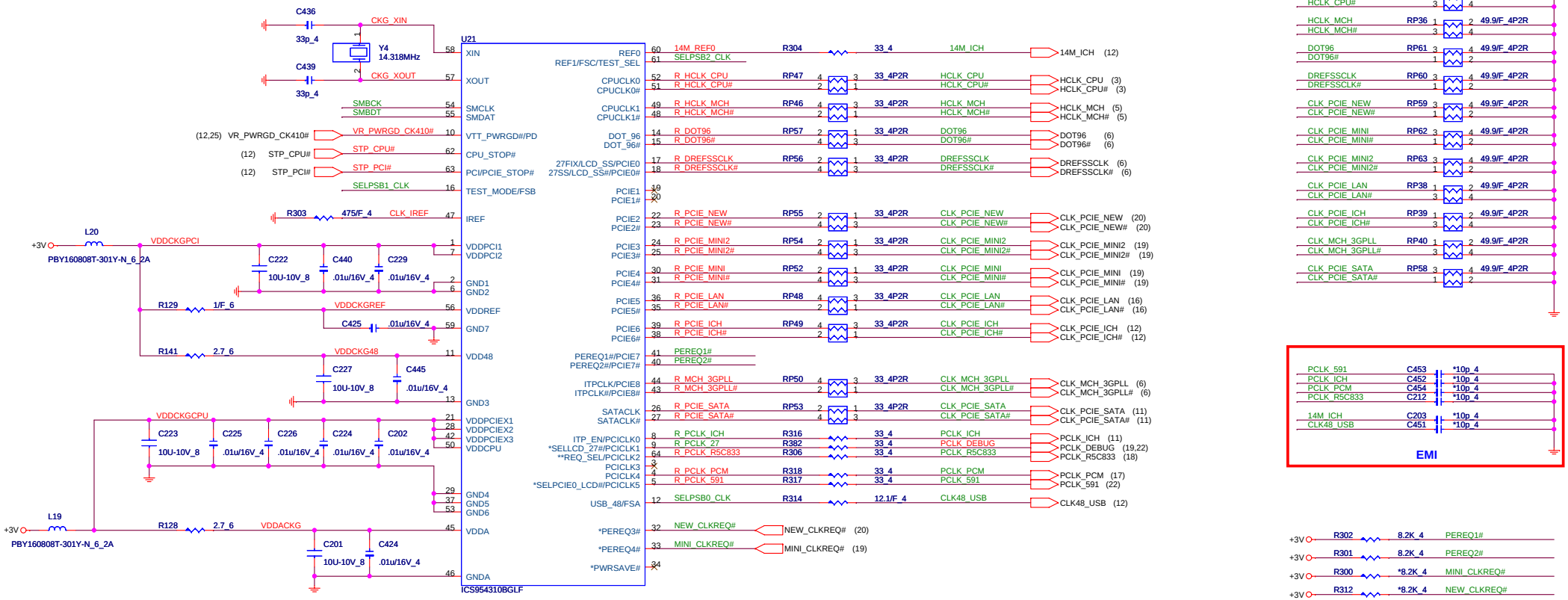

PEREQ1# --> PCIE0 & PCIE6
PEREQ2# --> PCIE1 & PCIE8
PEREQ3# --> PCIE2 & PCIE4
PEREQ4# --> PCIE3 & PCIE5 & PCIE7

SMBUS Address : D2 (Read) , D3 (Write)

FSB SETTING

FSC	FSB	FSA	CPU	PCIE	PCI
0	0	0	266	100	33
0	0	1	133	100	33
0	1	0	200	100	33
0	1	1	166	100	33
1	0	0	333	100	33
1	0	1	100	100	33
1	1	0	400	100	33
1	1	1	200	100	33

PROJECT : BU1(NAPA)
Quanta Computer Inc.

Size	Document Number	Rev
	CLOCK GENERATOR	1C

Date: Thursday, March 29, 2007 Sheet 2 of 28

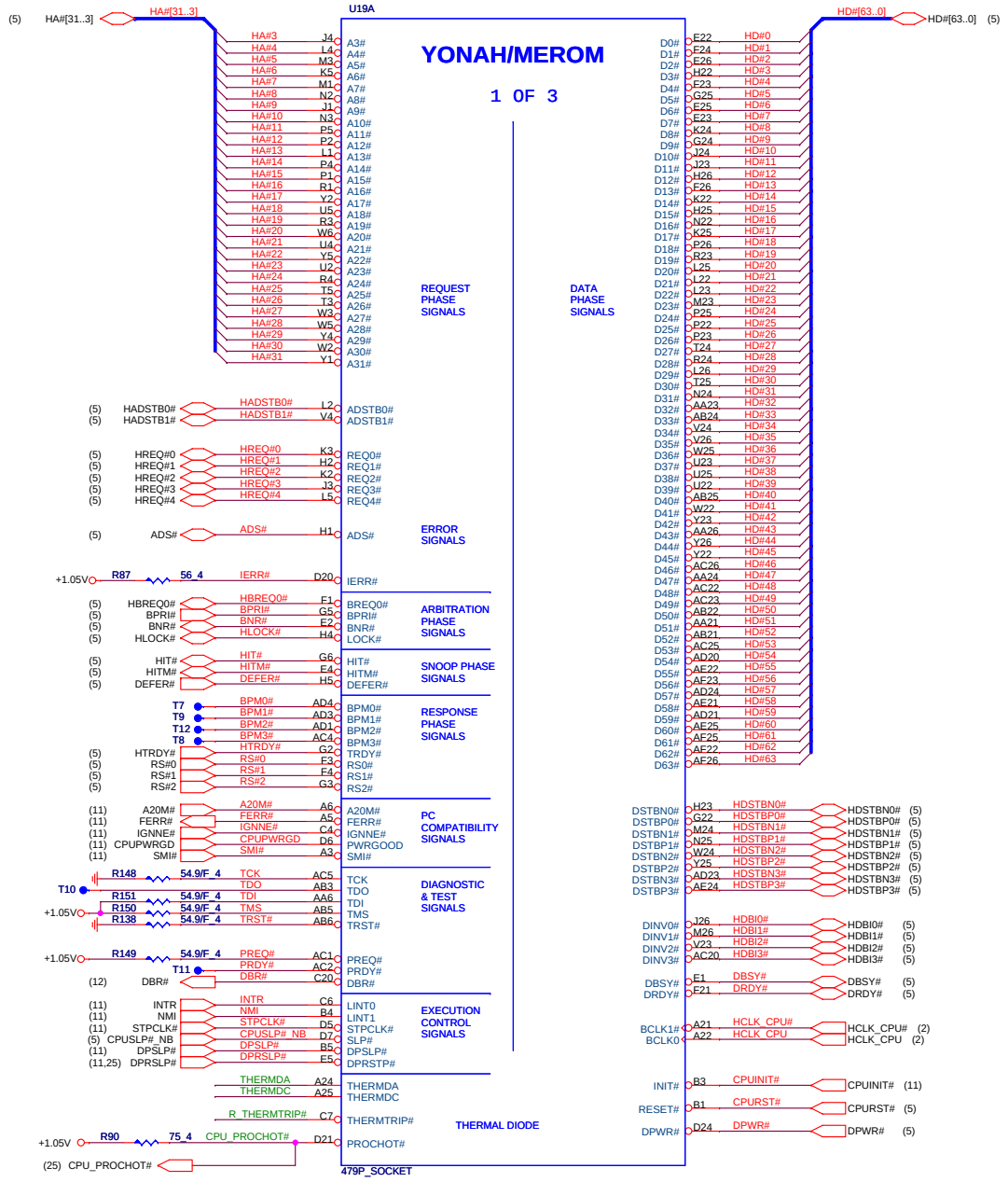

CPU

PROCHOT# Active: CPU reached it's max. saft operating temp
Thermtrip# Active: CPU junction temp exceeds 125 degree

SMBUS Address : 98

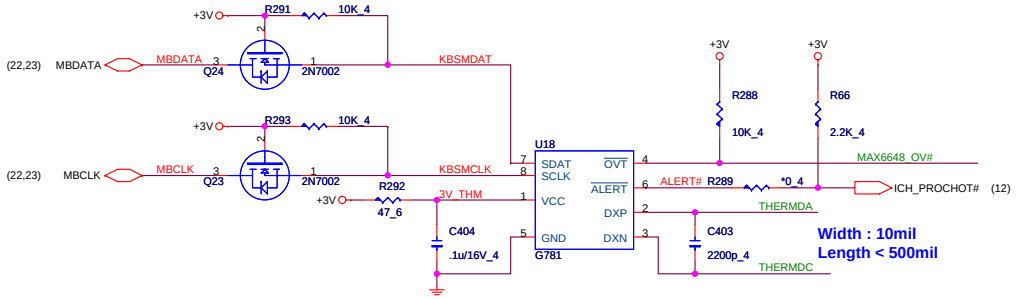

THM

MAXIM 6657 : AL006657020
GMT G781 : AL000781101

CPU FAN

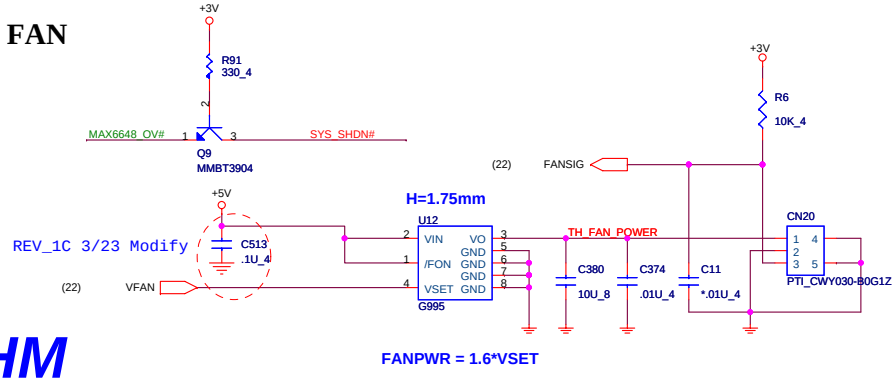

THM

FANPWR = 1.6*VSET

125 Degree Protection

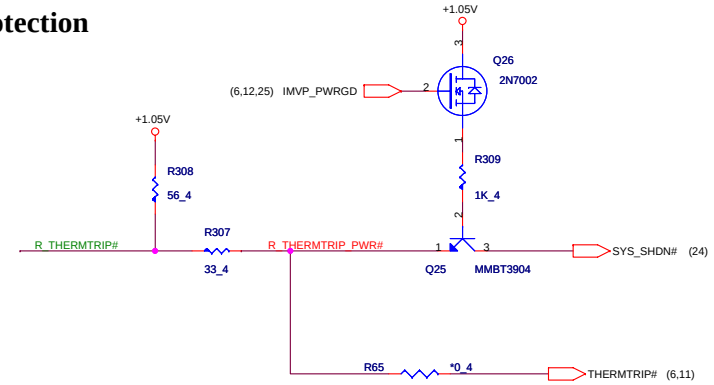

PROJECT : BU1(NAPA)
Quanta Computer Inc.

Size	Document Number	Rev
	CPU (HOST) / FAN	1C

Date: Friday, March 30, 2007 Sheet 3 of 28

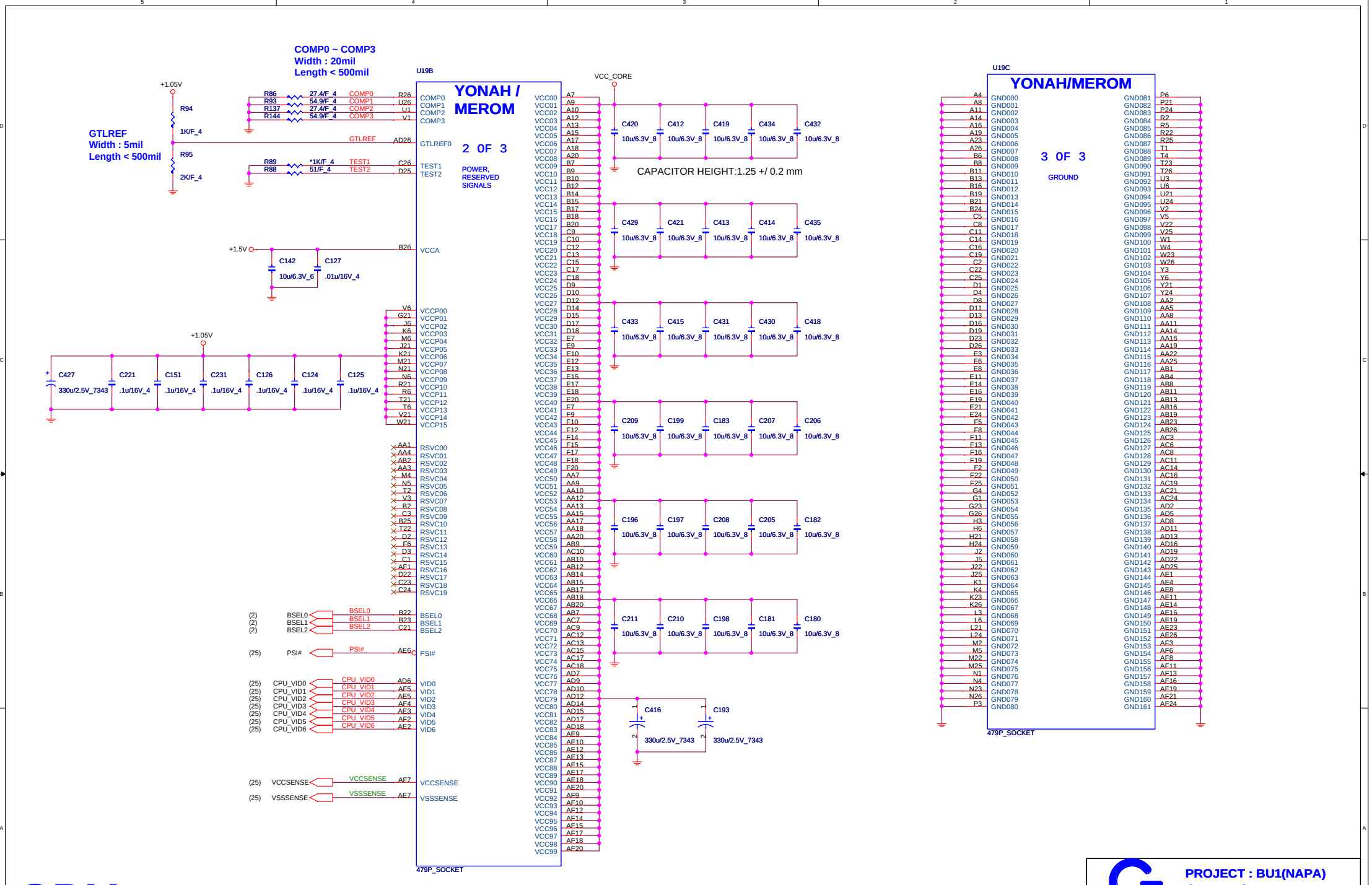
COMP0 ~ COMP3
Width : 20mil
Length < 500mil
U19B
YONAH / MEROM
2 OF 3
POWER, RESERVED SIGNALS
479P_SOCKET
+1.05V
R94
1K/F_4
R95
2K/F_4
GTLREF
Width : 5mil
Length < 500mil
R86 27.4/F_4 COMP0
R93 54.9/F_4 COMP1
R137 27.4/F_4 COMP2
R144 54.9/F_4 COMP3
GTLREF
R89 *1K/F_4 TEST1
R88 51/F_4 TEST2
+1.5V
C142 10u/6.3V_6
C127 .01u/16V_4
VCCA
C427 330u/2.5V_7343
C221 .1u/16V_4
C151 .1u/16V_4
C231 .1u/16V_4
C126 .1u/16V_4
C124 .1u/16V_4
C125 .1u/16V_4
BSEL0
BSEL1
BSEL2
PSI#
CPU_VID0
CPU_VID1
CPU_VID2
CPU_VID3
CPU_VID4
CPU_VID5
CPU_VID6
VCCSENSE
VSSSENSE
VCC_CORE
C420 C412 C419 C434 C432 10u/6.3V_8
CAPACITOR HEIGHT:1.25 +/ 0.2 mm
C429 C421 C413 C414 C435 10u/6.3V_8
C433 C415 C431 C430 C418 10u/6.3V_8
C209 C199 C183 C207 C206 10u/6.3V_8
C196 C197 C208 C205 C182 10u/6.3V_8
C211 C210 C198 C181 C180 10u/6.3V_8
C416 330u/2.5V_7343
C193 330u/2.5V_7343
U19C
YONAH/MEROM
3 OF 3
GROUND
479P_SOCKET
CPU
PROJECT : BU1(NAPA)
Quanta Computer Inc.
Size
Document Number
CPU (POWER/GND)
Rev
1C
Date: Thursday, March 29, 2007
Sheet 4 of 28

CLG

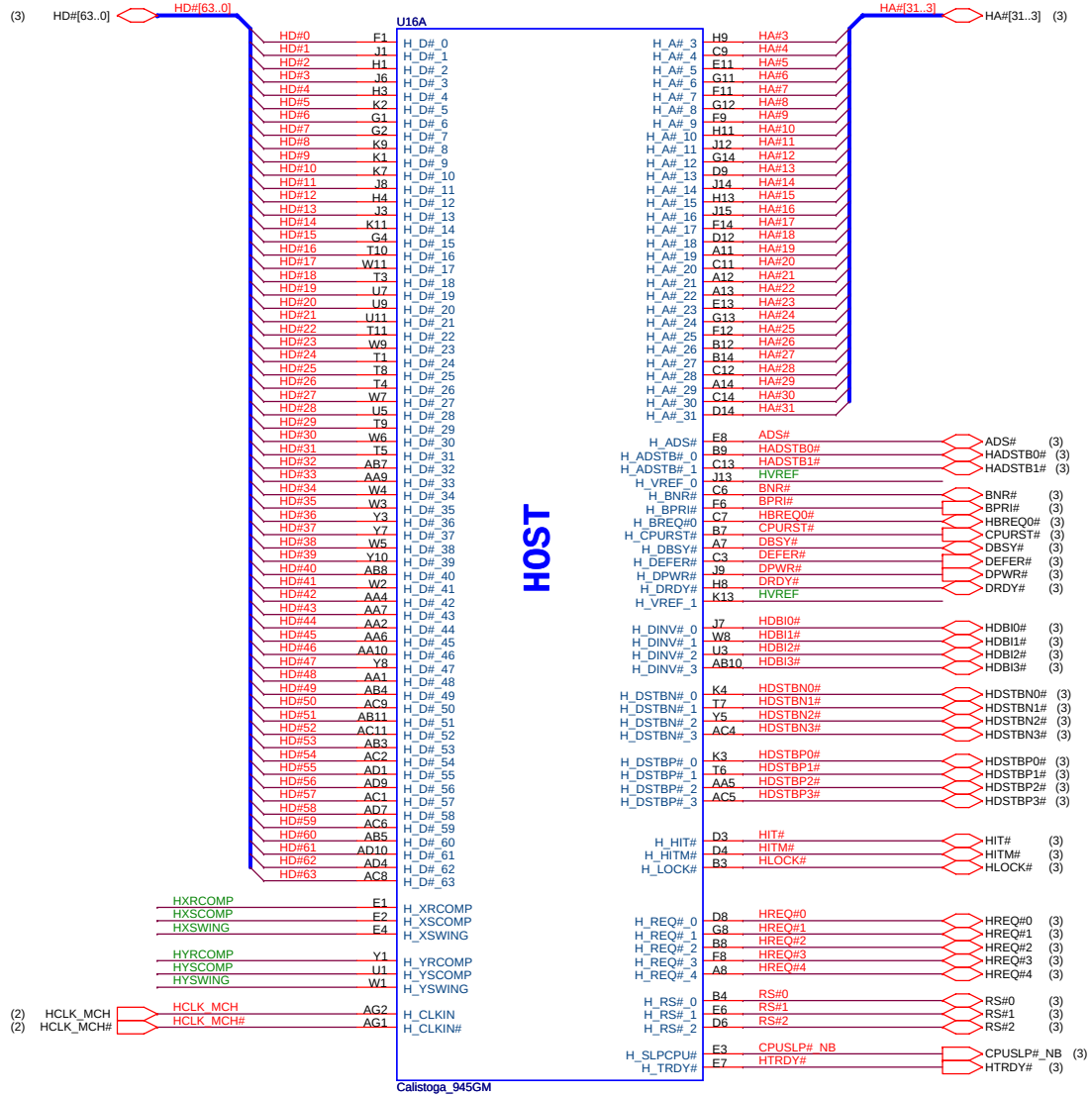

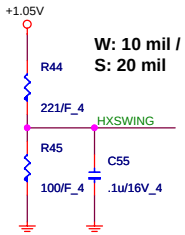

W: 10 mil /
S: 20 mil

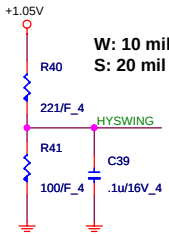

W: 10 mil /
S: 20 mil

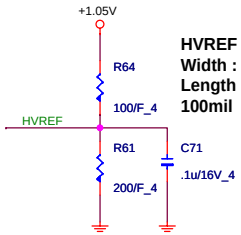

HVREF
Width : 20mil
Length <
100mil

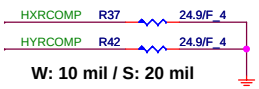

W: 10 mil / S: 20 mil

PROJECT : BU1(NAPA)
Quanta Computer Inc.

Size	Document Number	Rev
	GMCH (HOST)	1C

Date: Thursday, March 29, 2007 Sheet 5 of 28

CLG

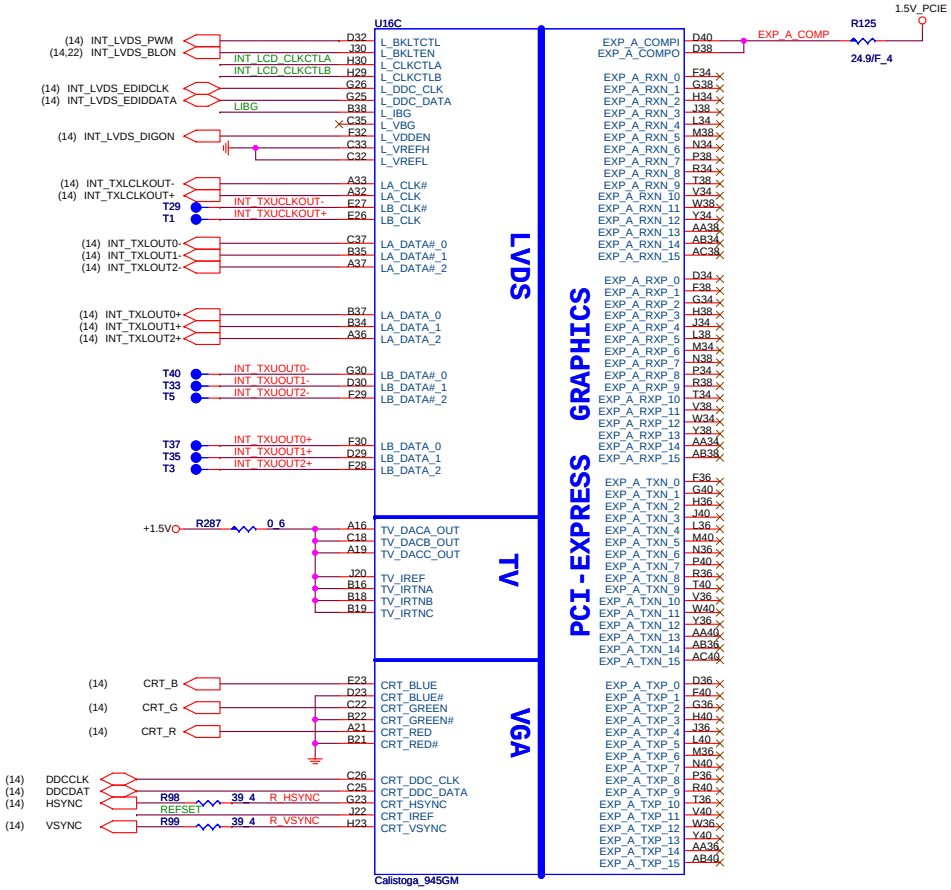

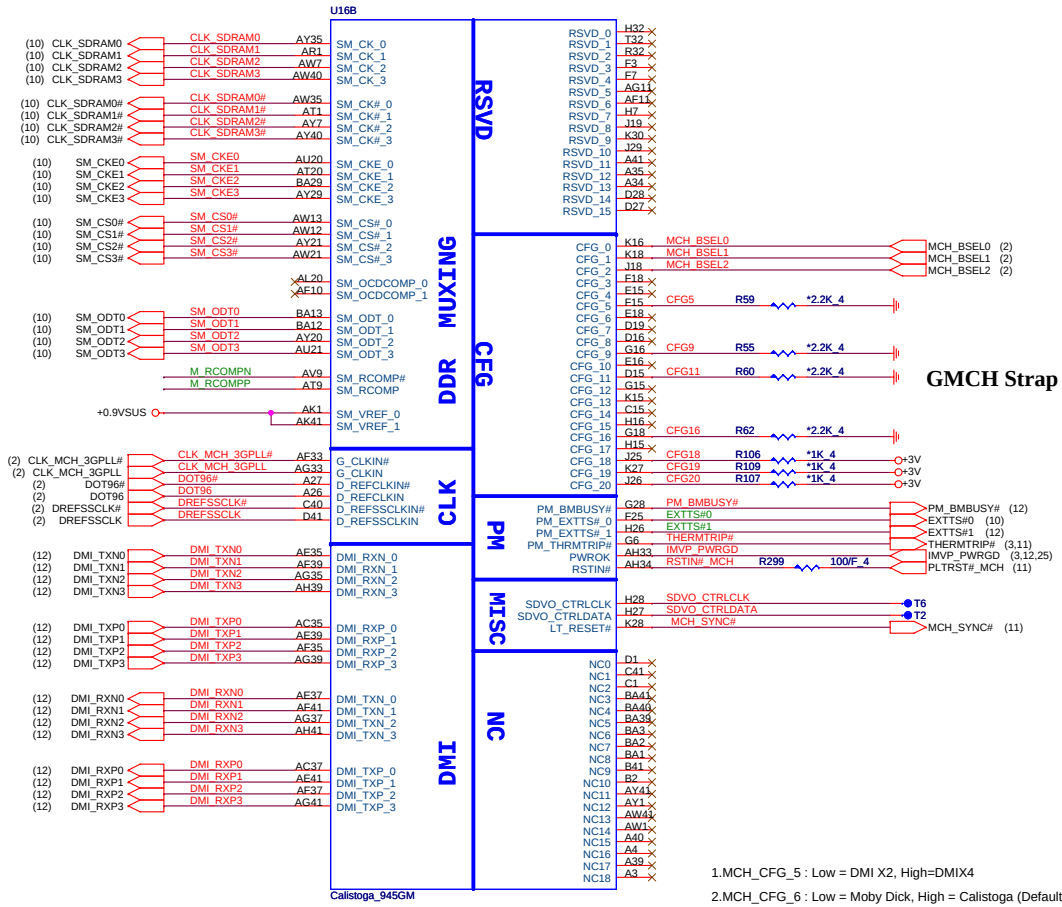

GMCH Strap pin

1.MCH_CFG_5 : Low = DMI X2, High=DMIX4

2.MCH_CFG_6 : Low = Moby Dick, High = Calistoga (Default)

3.MCH_CFG_7 : Low = RSVD, High = Mobile CPU

4.MCH_CFG_9 PCI Exp Graphics Lane: Low =Reverse lane ,High=Normal

5.MCH_CFG_10 Host PLL VCC Select: Low=Reserved, High=Mobility

6.MCH_CFG_11: PSB 4x Enable : Low=Rsvd, High=Calistoga.

7.MCH_CFG_16 FSB Dynmic ODT: Low = Dynamic ODT Disabled,
High= Dynamic ODT Enabled.

8.MCH_CFG_18 VCC Select: LOW=1.05V, High=1.5V

9.MCH_CFG_19 DMI LANE Reversal:Low=Normal,High=LANES Reversed.

10.MCH_CFG_20 PCIE Backward interpoerability mode:
Low= only SDVO or PCIE x1 is operational (defaults) ,
High=SDVO and PCIE x1 are operation simultaneously via the PEG port.

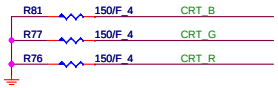

Near GMCH Chipset

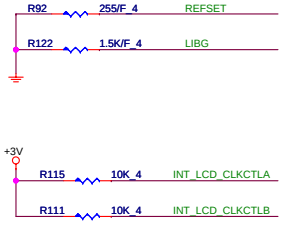

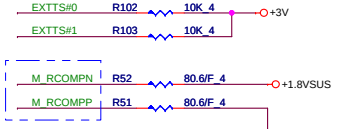

Width : 20mil
Length < 500mil

Size	Document Number: GMCH DMI & VEDIO	Rev 1C
Date: Thursday, March 29, 2007	Sheet 6 of 28	

PROJECT : BU1(NAPA)
Quanta Computer Inc.

CLG

PROJECT : BU1(NAPA)
Quanta Computer Inc.

Size	Document Number	Rev
	GMCH (MEMORY)	1C

Date: Thursday, March 29, 2007 Sheet 7 of 28

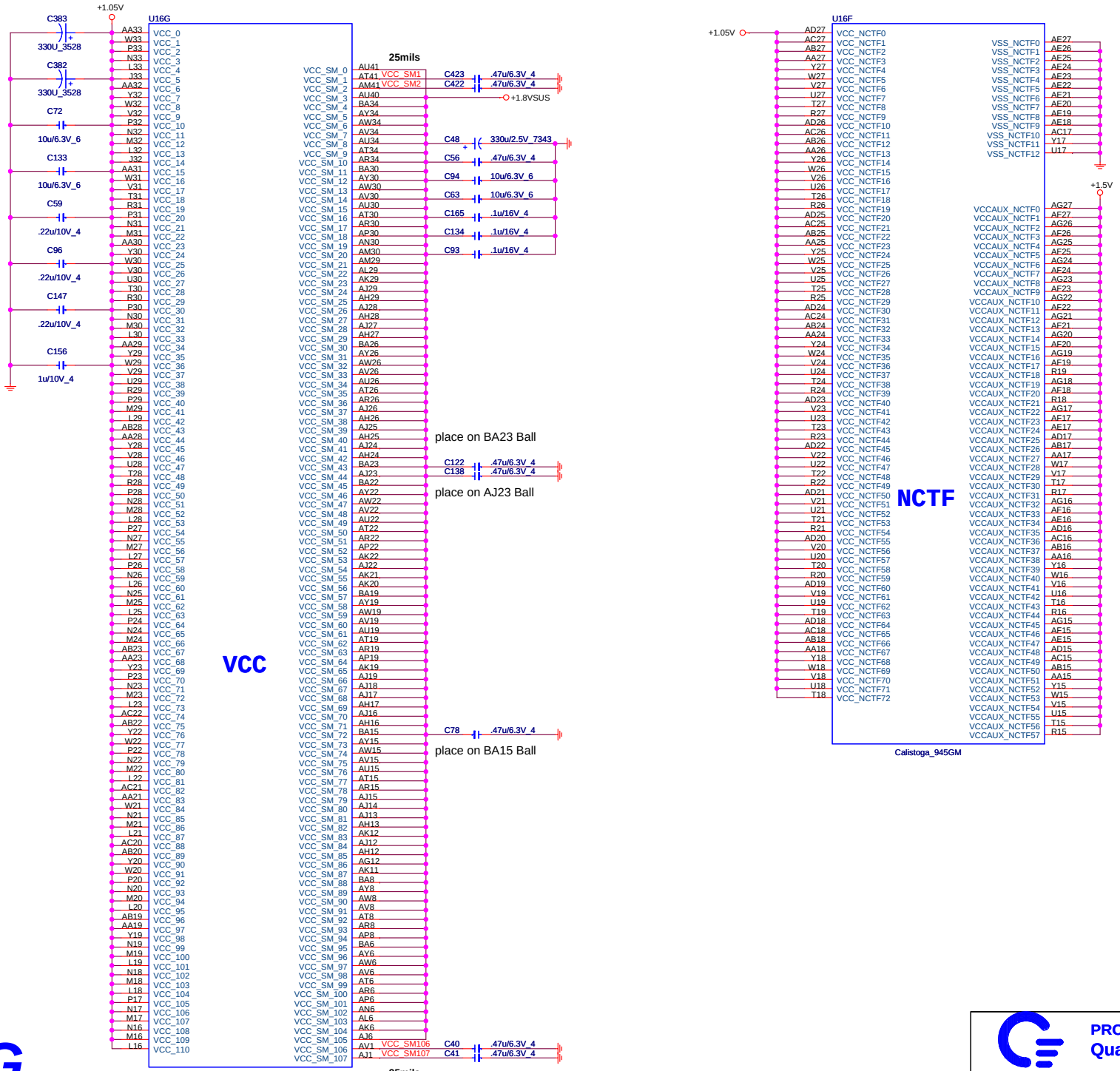

CLG

PROJECT : BU1(NAPA)
Quanta Computer Inc.

Size	Document Number	Rev
	GMCH (POWER/NCTF)	1C

Date: Tuesday, March 20, 2007 Sheet 8 of 28

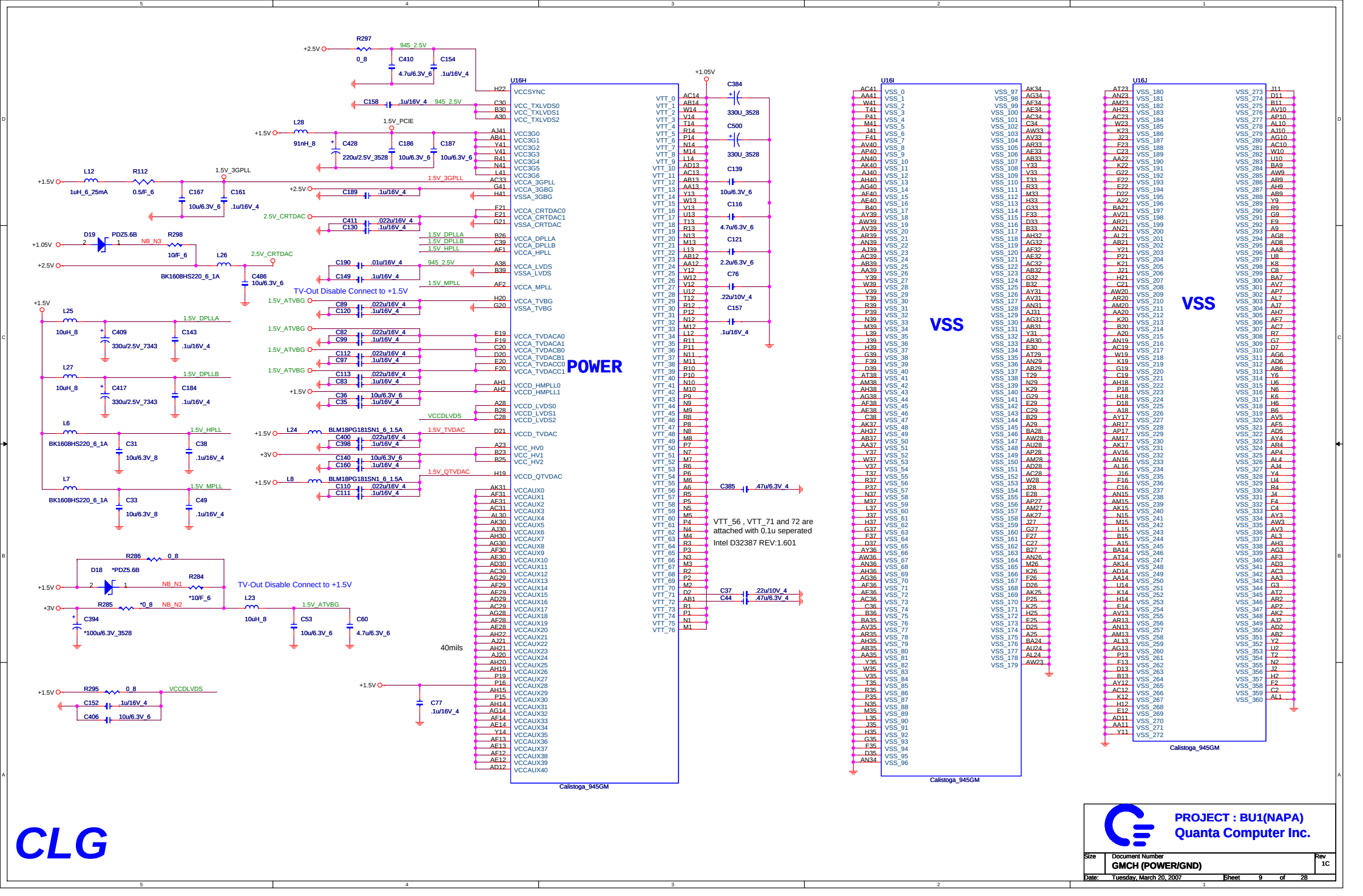
U16H
POWER
Calistoga_945GM
U16I
VSS
Calistoga_945GM
U16J
VSS
Calistoga_945GM
TV-Out Disable Connect to +1.5V
TV-Out Disable Connect to +1.5V
VTT_56 , VTT_71 and 72 are attached with 0.1u seperated
Intel D32387 REV:1.601
40mils
CLG
PROJECT : BU1(NAPA)
Quanta Computer Inc.
Size
Document Number
GMCH (POWER/GND)
Rev
1C
Date: Tuesday, March 20, 2007
Sheet 9 of 28

DDR2 SO-DIMM SOCKET

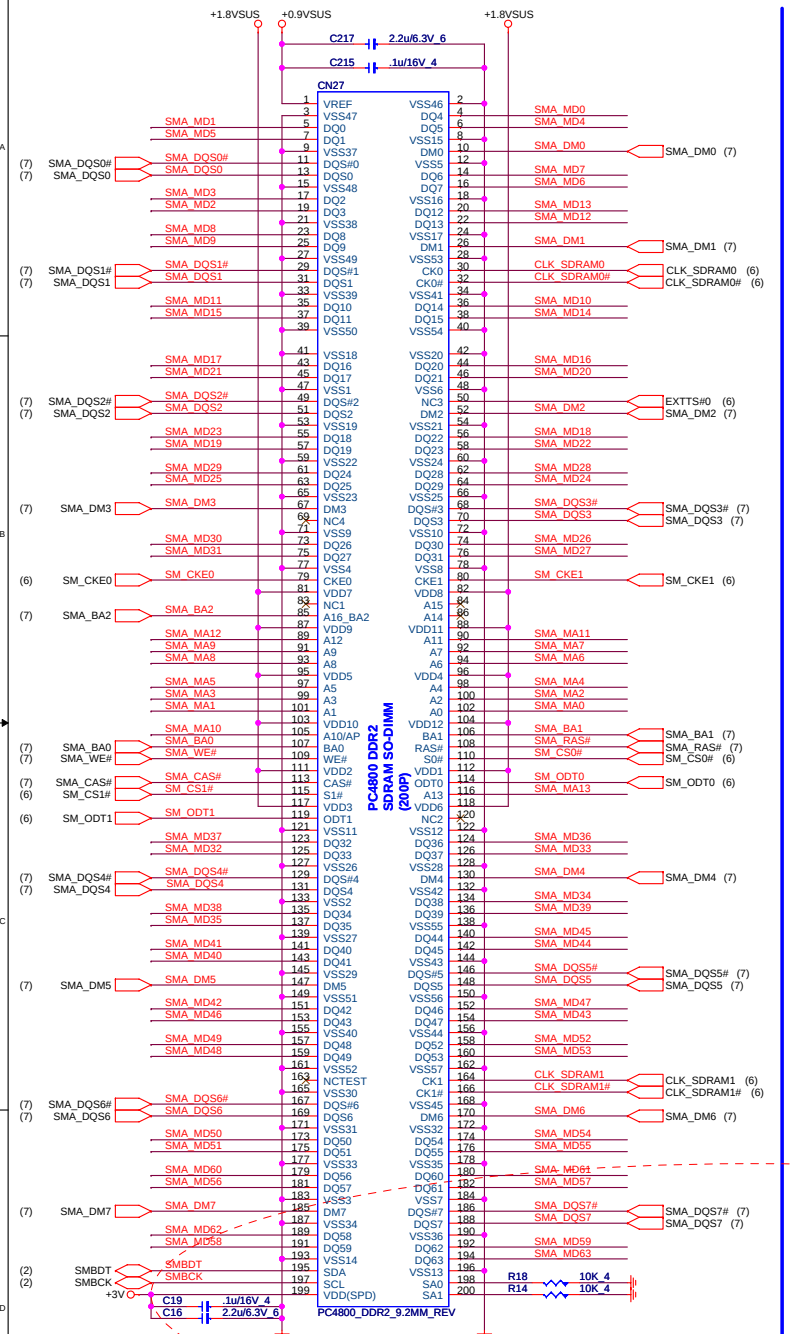

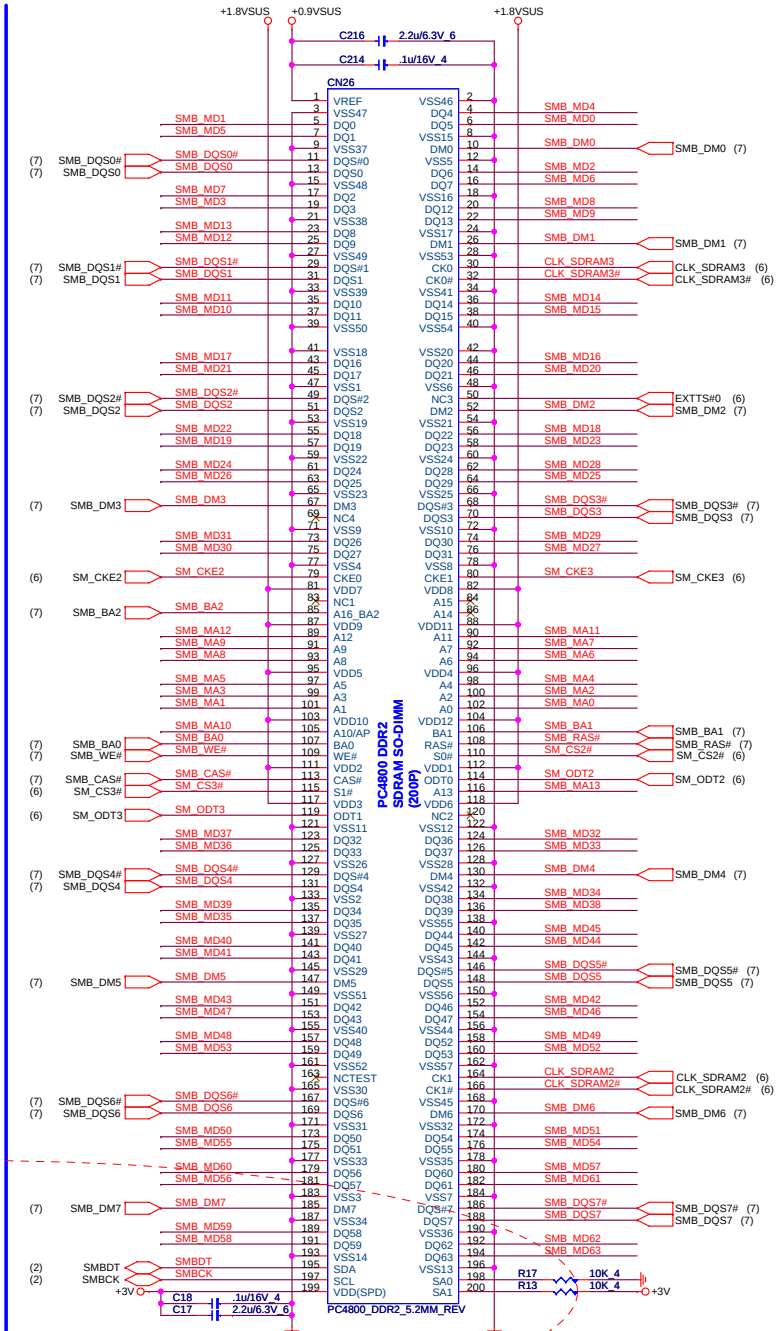

DDR2 TERMINATOR

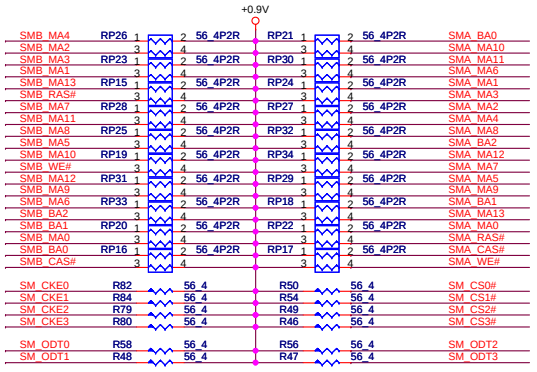

TERMINATOR DECOUPLING CAPACITOR

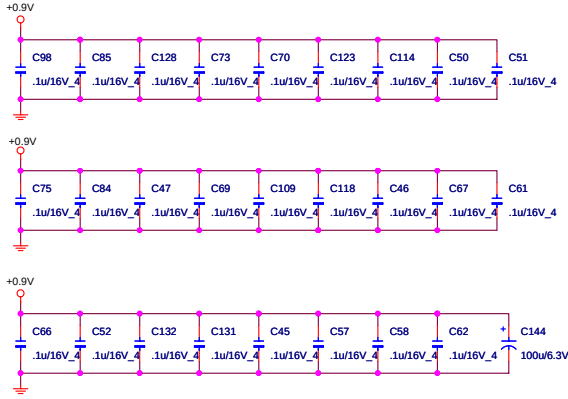

CLOSE SO-DIMM SOCKET CAPACITORS

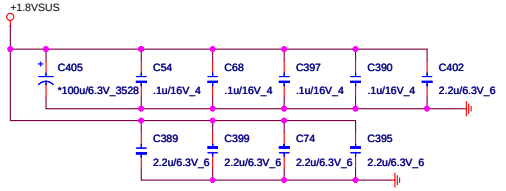

CLOSE SO-DIMM SOCKET CAPACITORS

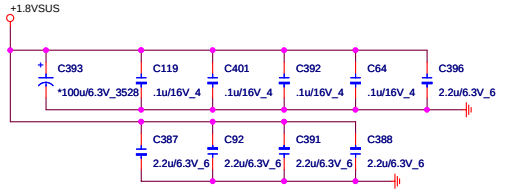

DDR

REV_1C 3/23 Modify SO-DIMM footprint

PROJECT : BU1(NAPA)
Quanta Computer Inc.

Size	Document Number	Rev
	DDR SO-DIMM(200P)	1C

Date: Friday, March 30, 2007 Sheet 10 of 28

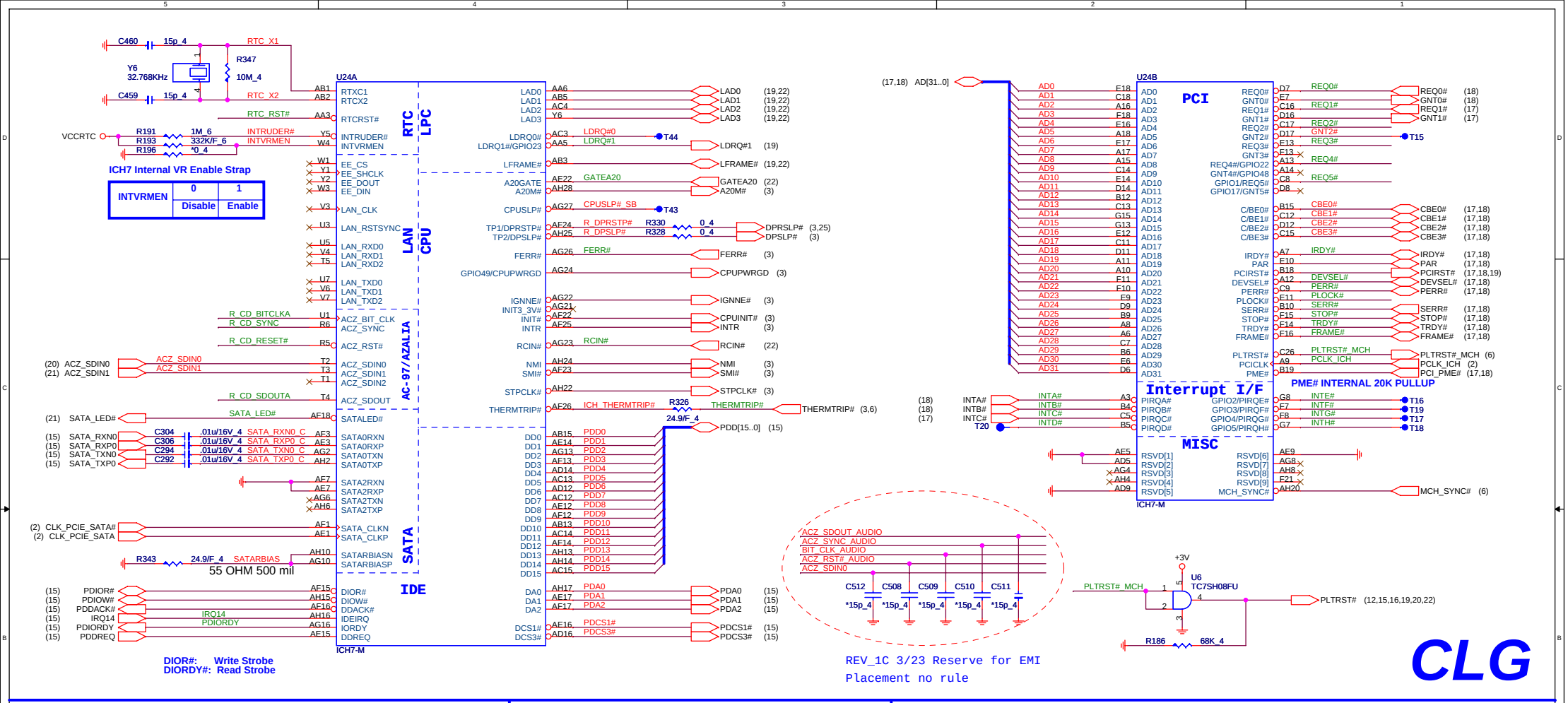

RTC

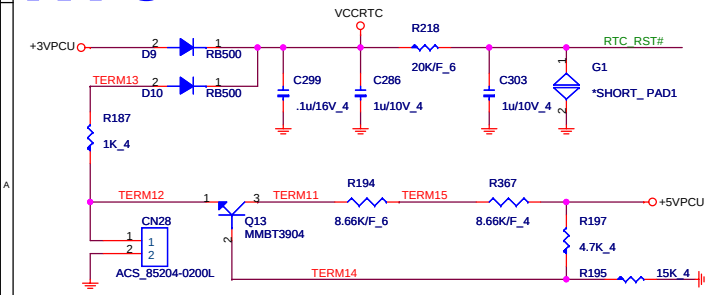

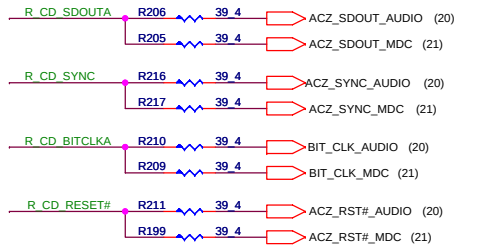

Reserved For EMI

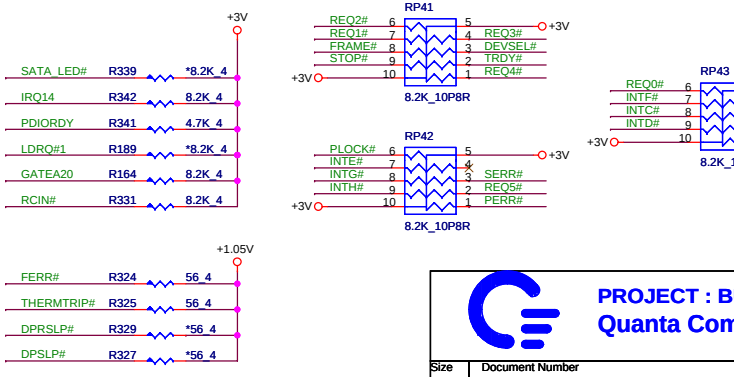

PROJECT : BU1(NAPA)
Quanta Computer Inc.

Size	Document Number	Rev
	ICH7 (CPU/PCI/IDE)	1C

Date: Friday, March 30, 2007 Sheet 11 of 28

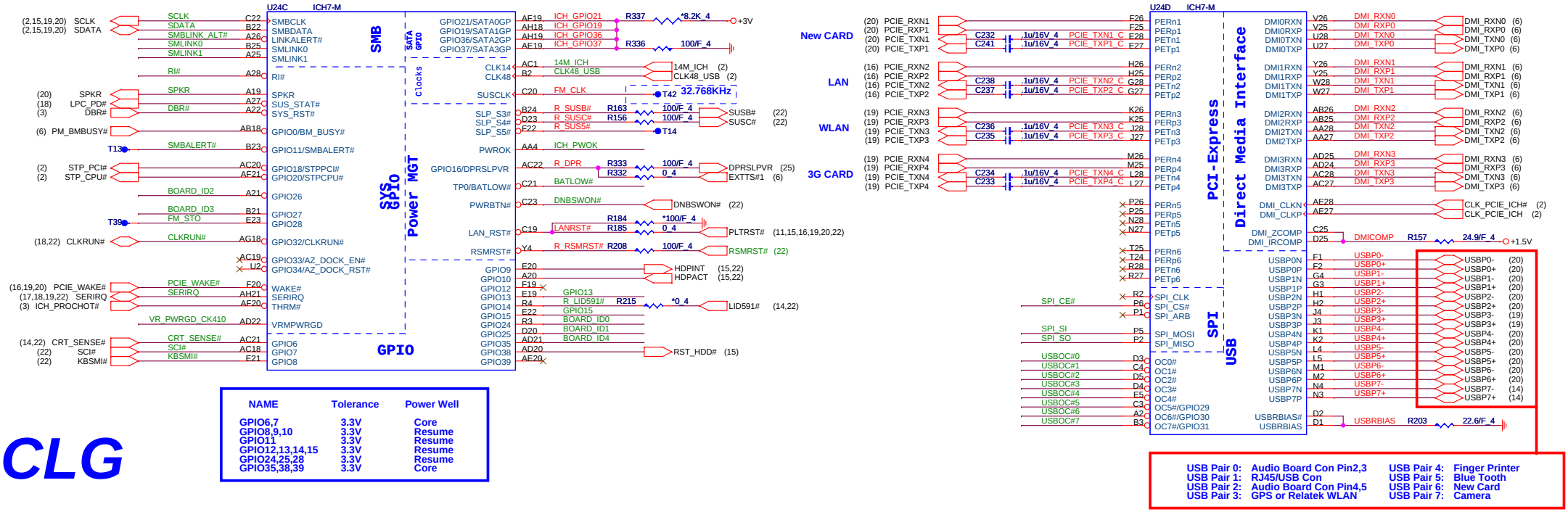

CLG

NAME	Tolerance	Power Well
GPIO6,7	3.3V	Core
GPIO8,9,10	3.3V	Resume
GPIO11	3.3V	Resume
GPIO12,13,14,15	3.3V	Resume
GPIO24,25,28	3.3V	Resume
GPIO35,38,39	3.3V	Core

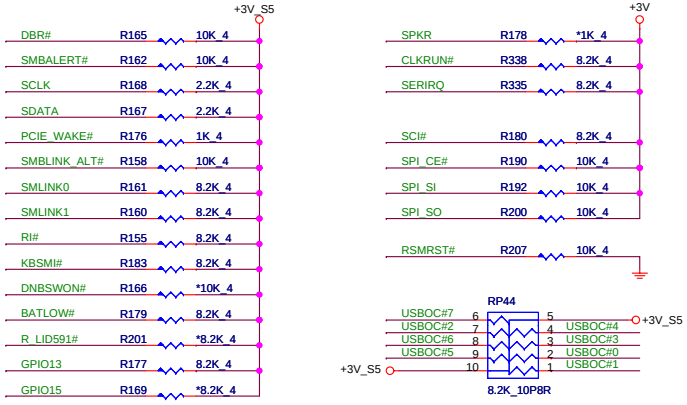

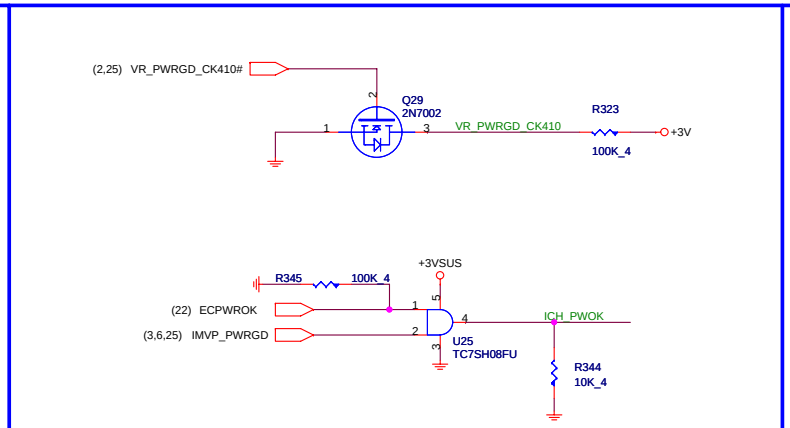

Reserved For EMI

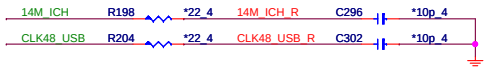

MB ID

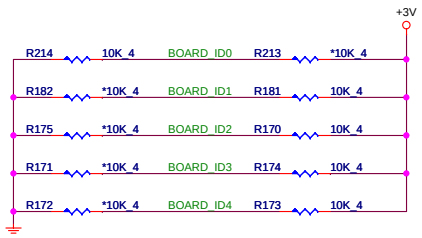

MB ID Selection Table

	BOARD_ID0	BOARD_ID1	BOARD_ID2	BOARD_ID3
W/ New Crad	H			
W/O New Crad	L			
W/ Crad Bus		H		
W/O Crad Bus		L		
W/ G-Sensor			H	
W/O G-Sensor			L	
W/ CCD				H
W/O CCD				L

PROJECT : BU1(NAPA)
Quanta Computer Inc.

Size	Document Number	Rev
	ICH7 (USB/GPIO)	1C

Date: Thursday, March 29, 2007 Sheet 12 of 28

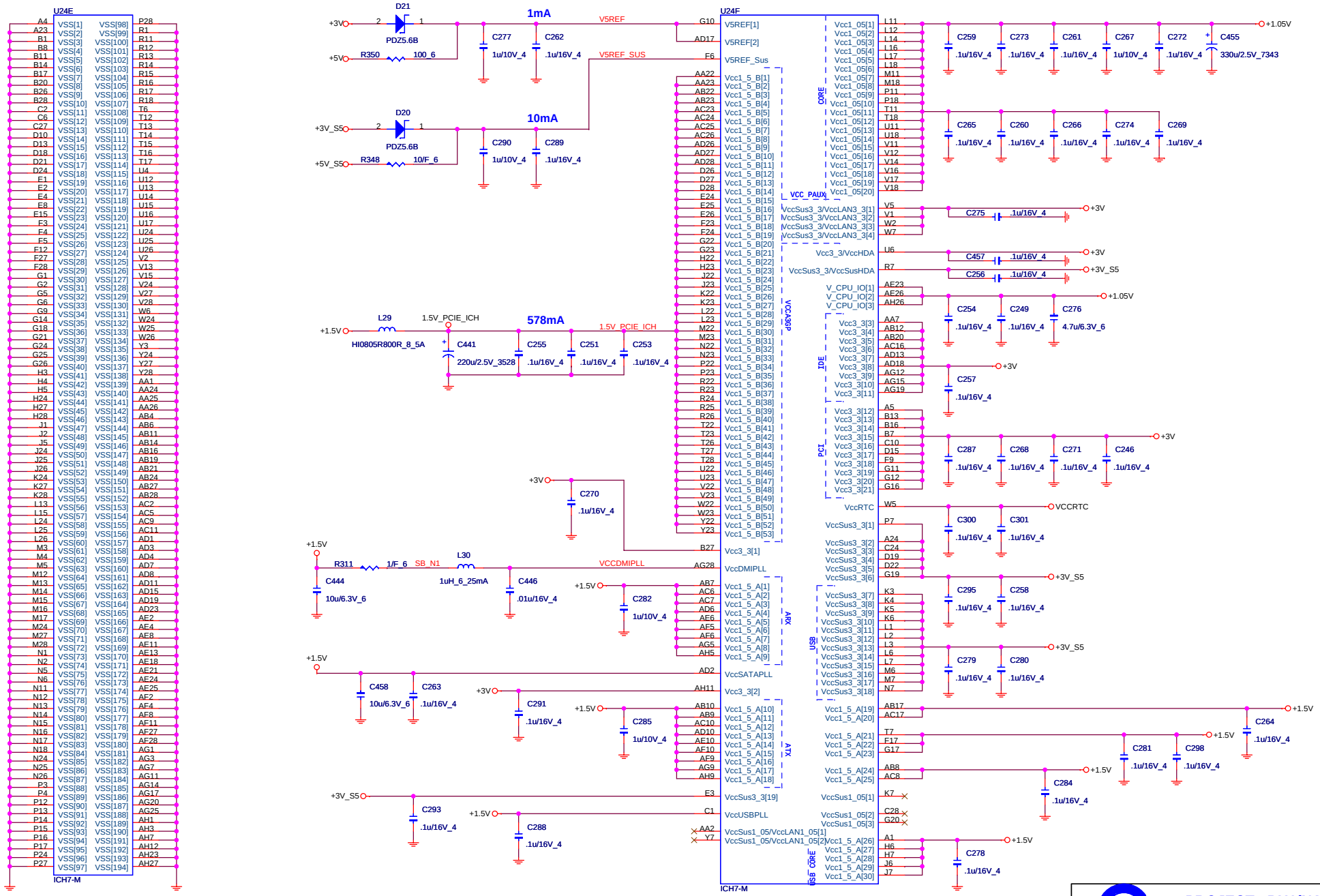

CLG

PROJECT : BU1(NAPA)
Quanta Computer Inc.

Size	Document Number	Rev
	ICH7 (POWER)	1C

Date: Tuesday, March 20, 2007 Sheet 13 of 28

CRT PORT

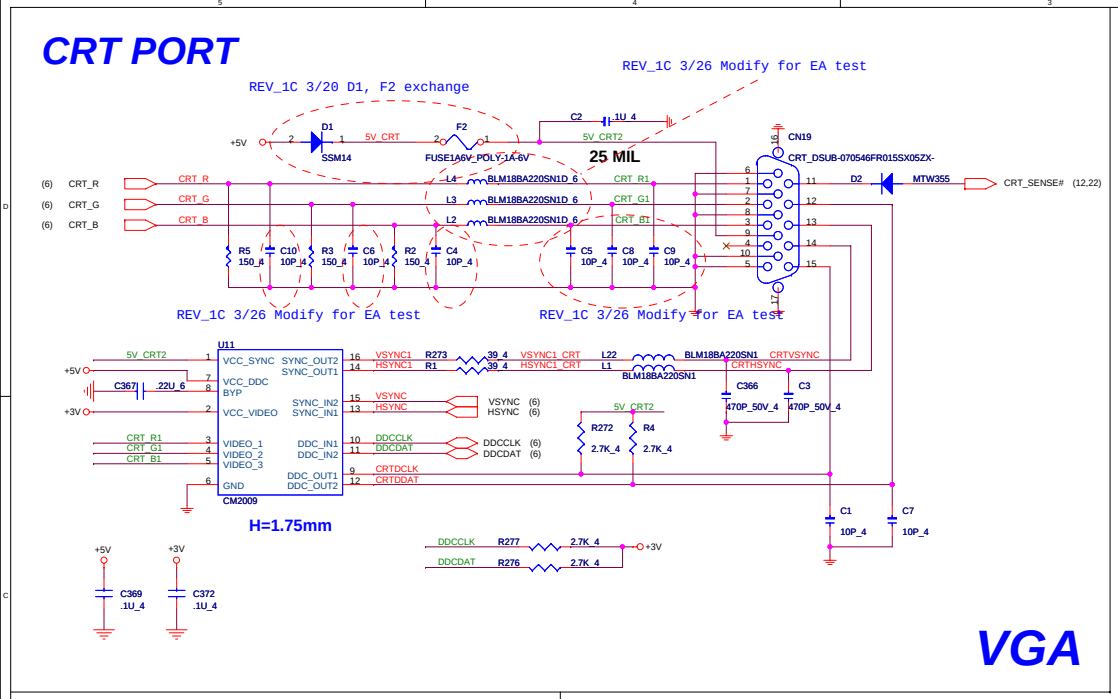

LCD/LED TYPE CONNECTOR

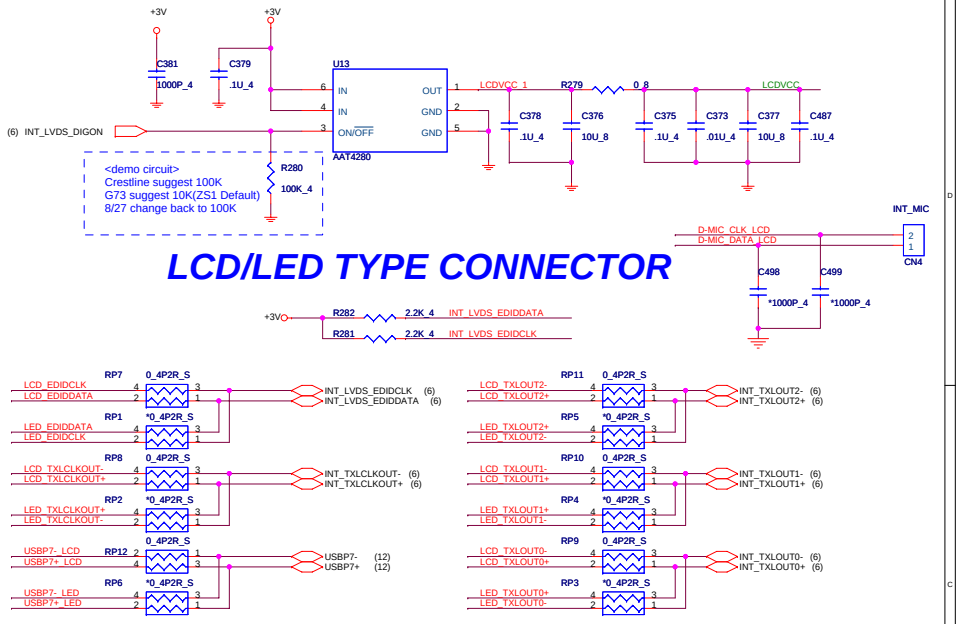

LID SWITCH

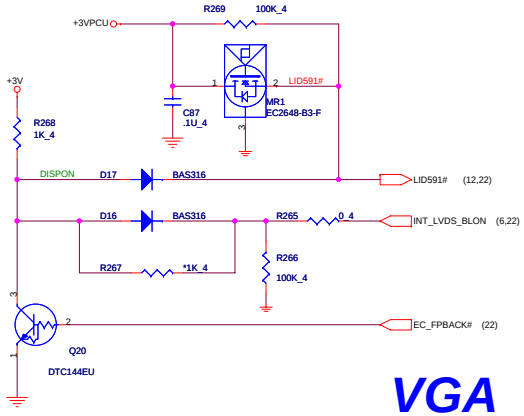

VGA

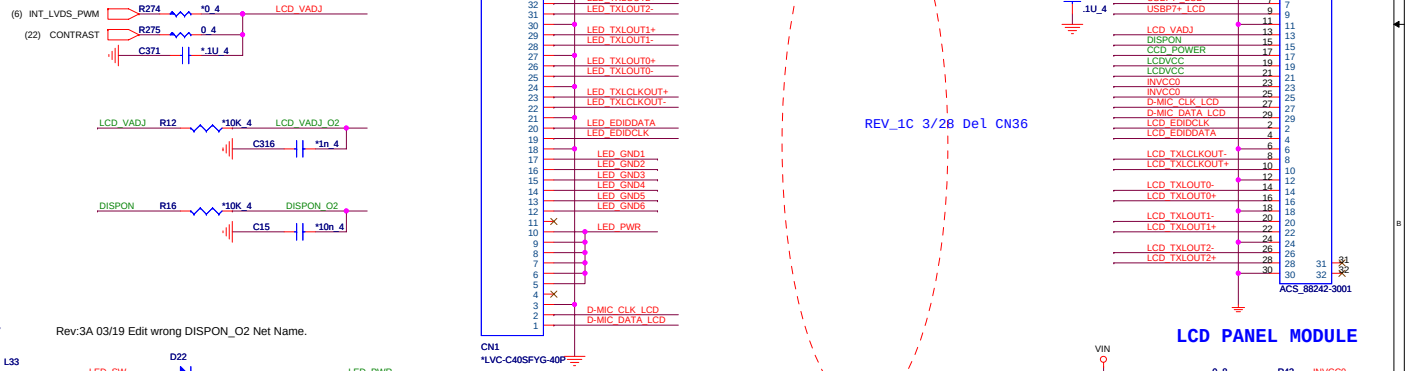

TOSHIBA LED PANEL MODULE

LCD PANEL MODULE

CAMERA MODULE Power

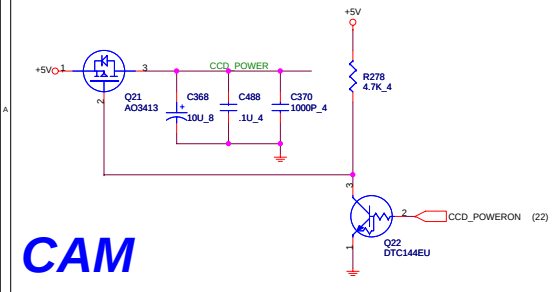

CAM

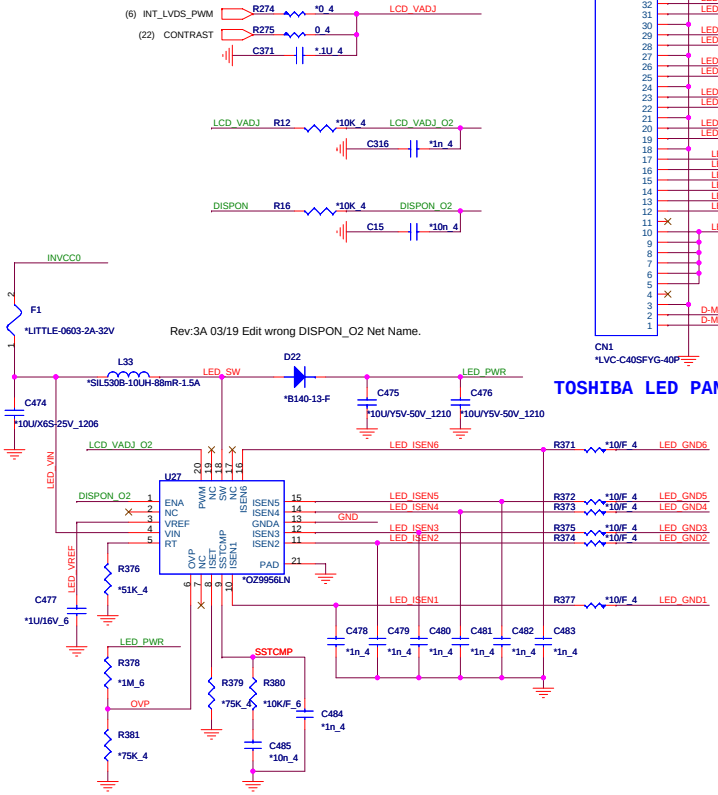

VGA

PROJECT : BU1(NAPA)
Quanta Computer Inc.

Size	Document Number	Rev
	LCD/CRT/LID/CAMERA	1C

Date: Friday, March 30, 2007 Sheet 14 of 28

ODD

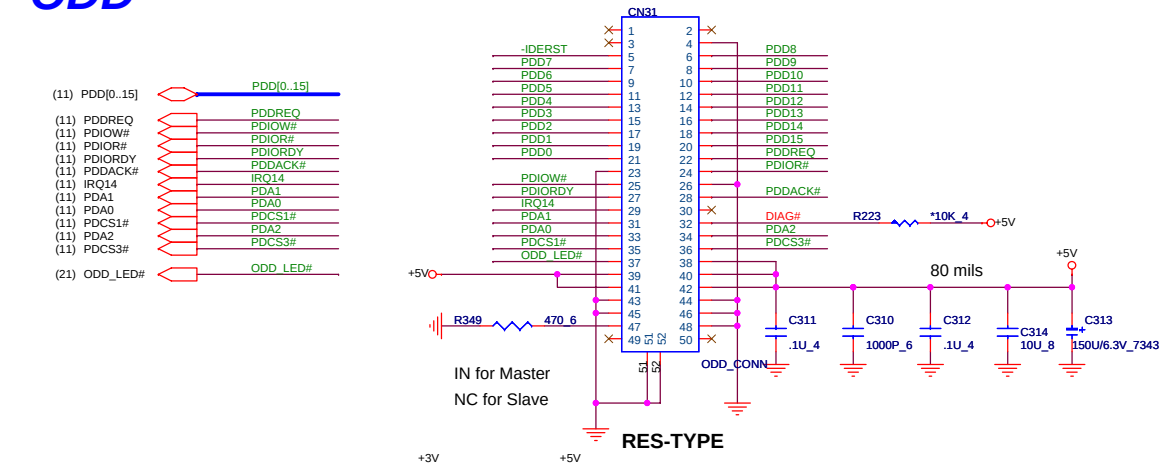

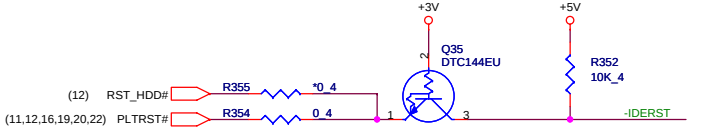

IDE

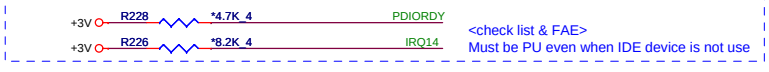

SATA HDD

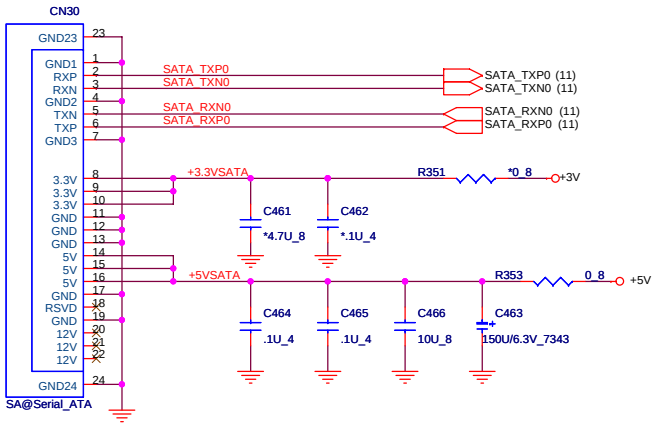

IDE

G SENSOR

SEC

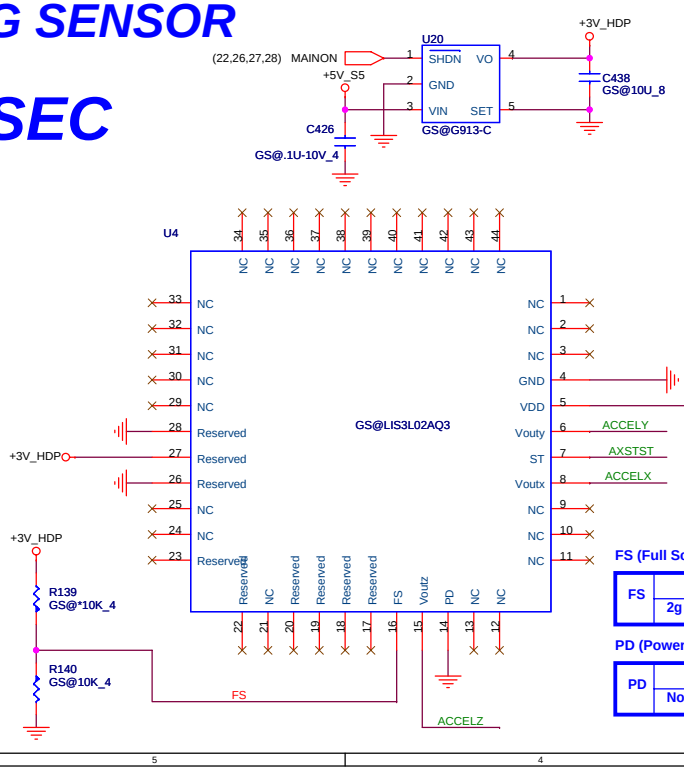

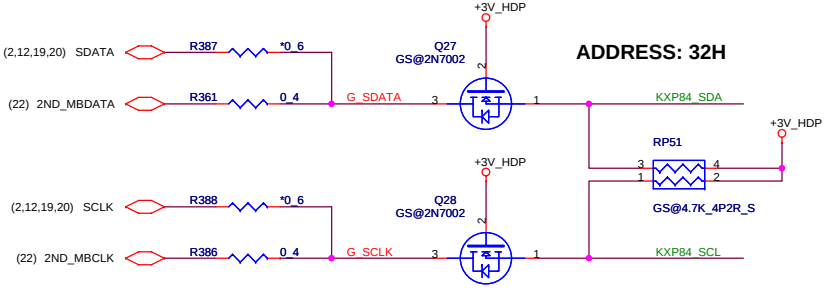

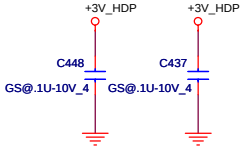

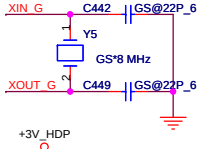

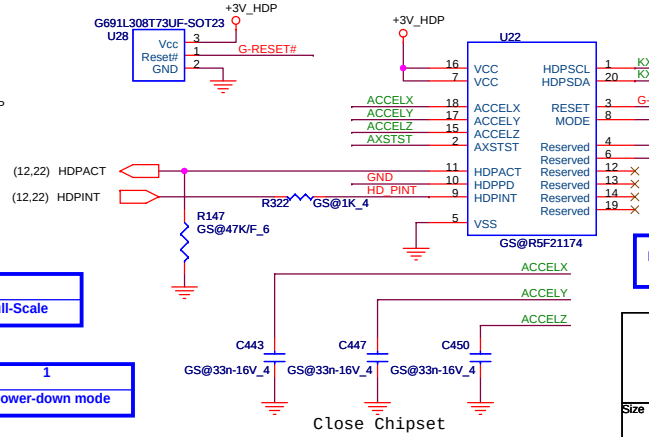

FS (Full Scale) selection

FS	0	1
	2g Full-Scale	6g Full-Scale

PD (Power Down) selection

PD	0	1
	Normal Mode	Power-down mode

HDPPD selection

HDPPD	0	1
	Normal Mode	Power-down mode

PROJECT : BU1(NAPA)
Quanta Computer Inc.

Size	Document Number	Rev
	SATA/PATA/G-SENSOR	1C

Date: Friday, March 30, 2007 Sheet 15 of 28

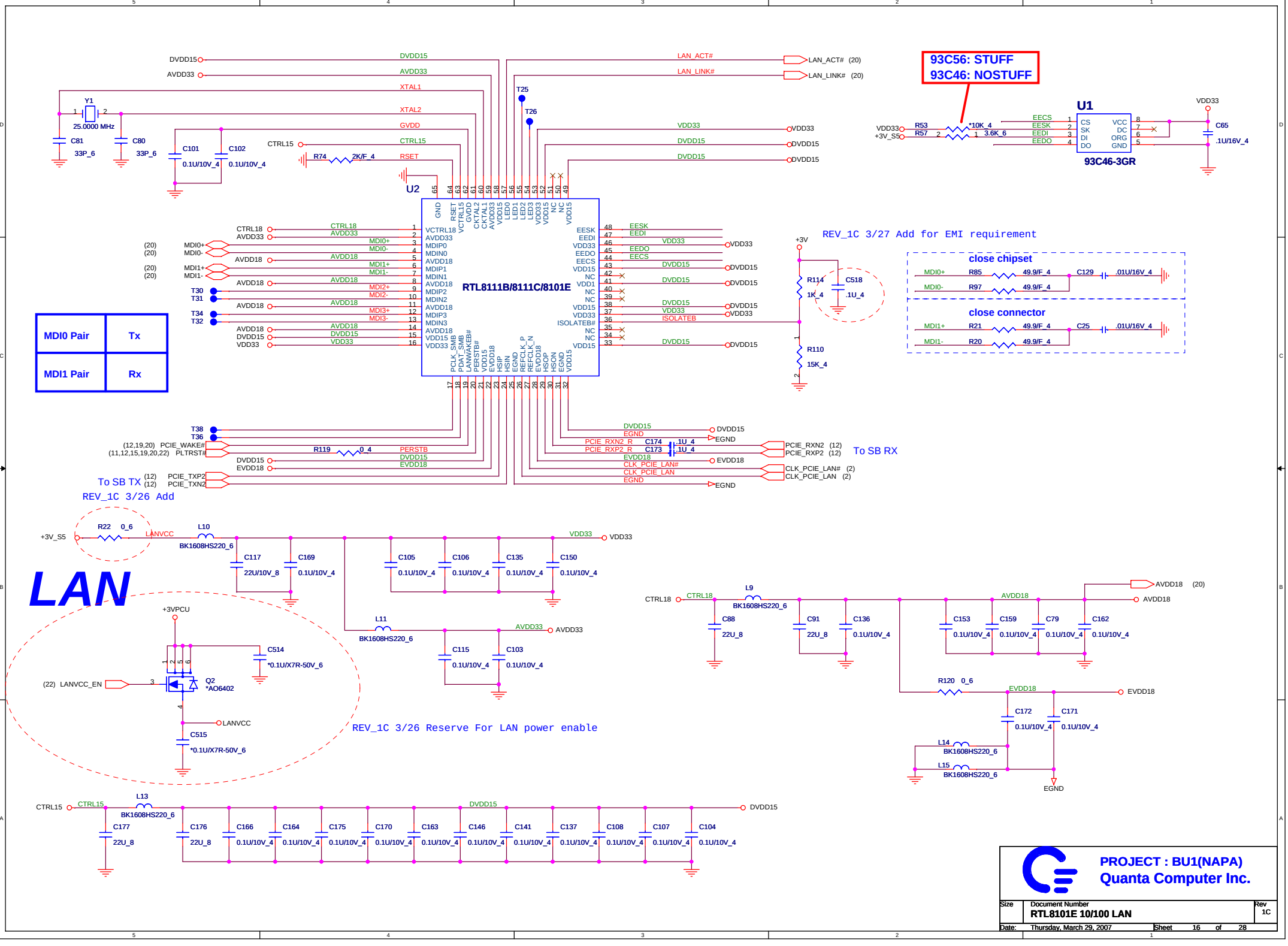
93C56: STUFF
93C46: NOSTUFF
U1
93C46-3GR
U2
RTL8111B/8111C/8101E
REV_1C 3/27 Add for EMI requirement
close chipset
close connector
MDI0 Pair
Tx
MDI1 Pair
Rx
To SB RX
To SB TX
REV_1C 3/26 Add
LAN
REV_1C 3/26 Reserve For LAN power enable
PROJECT : BU1(NAPA)
Quanta Computer Inc.
Document Number
RTL8101E 10/100 LAN
Rev
1C
Date: Thursday, March 29, 2007
Sheet 16 of 28

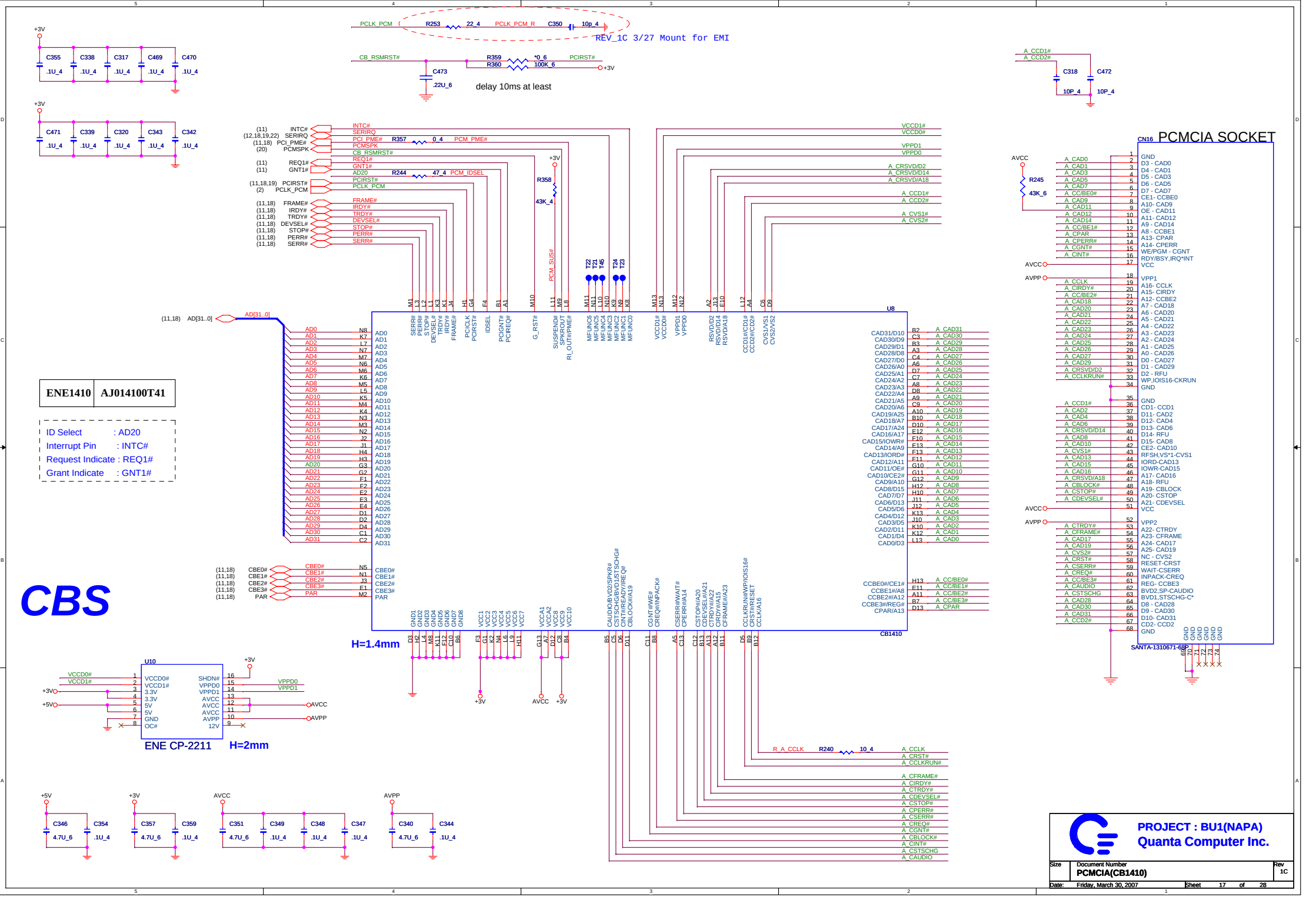
PCLK_PCM R253 22_4 PCLK_PCM_R C350 10p_4
REV_1C 3/27 Mount for EMI
CB_RSMRST# R359 *0_6 PCIRST# R360 100K_6 +3V
C473 .22U_6
delay 10ms at least
C355 C338 C317 C469 C470 .1U_4
C471 C339 C320 C343 C342 .1U_4
A_CCD1# A_CCD2# C318 C472 10P_4
PCMCIA SOCKET
CN16
SANTA-1310671-68P
ENE1410 AJ014100T41
ID Select : AD20
Interrupt Pin : INTC#
Request Indicate : REQ1#
Grant Indicate : GNT1#
CBS
U8
CB1410
H=1.4mm
U10
ENE CP-2211
H=2mm
R357 0_4 PCM_PME#
R244 47_4 PCM_IDSEL
R358 43K_4
R245 43K_6
R240 10_4 R_A_CCLK
PROJECT : BU1(NAPA)
Quanta Computer Inc.
Size
Document Number
PCMCIA(CB1410)
Rev 1C
Date: Friday, March 30, 2007
Sheet 17 of 28

R5C832 : AJ5C8320H26
R5C833 : AJ5C8330H05

U9B — PCI / OTHER

Pin	Signal
10, 20, 27, 32, 41, 128	VCC_PCI1, VCC_PCI2, VCC_PCI3, VCC_PCI4, VCC_PCI5, VCC_PCI6
61	VCC_RIN
16, 34, 54, 114, 120	VCC_ROUT1, VCC_ROUT2, VCC_ROUT3, VCC_ROUT4, VCC_ROUT5
67	VCC_3V
86	VCC_MD
4, 13, 22, 28, 54, 62, 63, 68, 118, 122	GND1, GND2, GND3, GND4, GND5, GND6, GND7, GND8, GND9, GND10
99, 102, 103, 107, 111	AGND1, AGND2, AGND3, AGND4, AGND5
69	HWSPND#
58	MSEN
55	XDEN
57	UDIO5
65, 59	UDIO3, UDIO4
56	UDIO2
60	UDIO1
72	UDIO0/SRIRQ#
115	INTA#
116	INTB#
66	TEST
125, 126, 127, 1, 2, 3, 5, 6, 9, 11, 12, 14, 15, 17, 18, 19, 36, 37, 38, 39, 40, 42, 43, 44, 46, 47, 48, 49, 50, 51, 52, 53	AD31, AD30, AD29, AD28, AD27, AD26, AD25, AD24, AD23, AD22, AD21, AD20, AD19, AD18, AD17, AD16, AD15, AD14, AD13, AD12, AD11, AD10, AD9, AD8, AD7, AD6, AD5, AD4, AD3, AD2, AD1, AD0
33, 7, 21, 35, 45, 8	PAR, C/BE3#, C/BE2#, C/BE1#, C/BE0#, IDSEL
124, 123, 23, 24, 25, 26, 29, 30, 31	REQ#, GNT#, FRAME#, IRDY#, TRDY#, DEVSEL#, STOP#, PERR#, SERR#
71, 119	GBRST#, PCIRST#
121	PCICLK
70	PME#
117	CLKRUN#

R5C833

U9A — IEEE1394/SD

Pin	Signal
98, 106, 110, 112	AVCC_PHY1, AVCC_PHY2, AVCC_PHY3, AVCC_PHY4
113, 104, 105, 108, 109	TPBIAS0, TPB0N, TPB0P, TPA0N, TPA0P
94	XI
95	XO
96	FIL0
101	REXT
100	VREF
97	RSV
87, 92, 89, 91, 90, 93, 81, 82	MDIO17, MDIO16, MDIO15, MDIO14, MDIO13, MDIO12, MDIO11, MDIO10
75, 88, 83, 85, 78, 77	MDIO05, MDIO08, MDIO19, MDIO18, MDIO02, MDIO03
80	MDIO00
79	MDIO01
84, 76, 74, 73	MDIO09, MDIO04, MDIO06, MDIO07

R5C833 H=1.4mm

C334 10U_6, C332 .01U_4, C329 .1U_4, C325 .01U_4, C356 10U_6, C363 .01U_4, C365 .01U_4, C362 .01U_4, C364 .01U_4, C331 .47U_4, C353 .47U_4, C319 .01U_4, C321 10U_6, C330 10U_6, C467 .1U_4, C333 .01U_4, C468 1000P_4

VCC_ROUT_832

If VCC_3V tied to +3V, PME# function is not supported

(11,17) AD[31..0]

ID Select : AD17
Interrupt Pin : INTA#,INTB#
Request Indicate : REQ0#
Grant Indicate : GNT0#

AD17 R271 150/F_4 RICOH_IDSEL

R234 10K_4 — When HWSPND# is controlled by system, the pull-up resistor(R4059) dose not need to apply.

D11 *BAS316 — 832_SUS# — LPC_PD# (12)

R246 10K_4, R254 10K_4, R250 100K_4, R248 *100K_4

SCL_CARD, SDA_CARD

SERIRQ (12,17,19,22)

INTA# (11) INTB# (11) — Default setting: INTA# is assert to 1394, INTB# is assert to Cardreader

(11,17) PAR, (11,17) CBE3#, (11,17) CBE2#, (11,17) CBE1#, (11,17) CBE0#, RICOH_IDSEL

(11) REQ0#, (11) GNT0#, (11,17) FRAME#, (11,17) IRDY#, (11,17) TRDY#, (11,17) DEVSEL#, (11,17) STOP#, (11,17) PERR#, (11,17) SERR#

GRST# 832

(11,17,19) PCIRST#, (2) PCLK_R5C833, (11,17) PCI_PME#, (12,22) CLKRUN#

PowerOnReset for Vcc

When GRESET# is controlled by system, the pull-up resistor and capacitor do not need to apply.

+3VSUS R233 22K_4, GRST# 832, C324 .1U_4, PCLK_R5C833, R255 22_4, C361 22P_4

REV_1C 3/27 Mount for EMI

1394_AVCC, L21 BK1608HS220 — 22ohm/1A

C328 22P_4, 1394_XIN, H=1.2mm, 24.576MHz Y2 better than 50ppm, C327 22P_4, 1394_XOUT, C326 *.01U_4, FIL0_PWR, R5C832 stuff only, R241 10K/F_4 REXT, C336 .01U_4 VREF_PWR

AS CLOSE AS POSSIBLE TO R5C833 and GUARD GND

XD_D7, XD_D6, XD_D5, XD_D4, XD_D3/MS_D3/SD_D3, XD_D2/MS_D2/SD_D2, XD_D1/MS_D1/SD_D1, XD_D0/MS_D0/SD_D0, XD_WPO#, XD_WE#/MS_BS/SD_CMD, XD_ALE, XD_CLE, XD_CE#, XD_R/B#/SD_WP#

SD_CDZ — D12 BAS316, MS_CDZ — D13 BAS316, R227 10K_4, XD_CDZ

R231 56.2/F_4 XD_RE#/CLK

MS_SD_CLK, MC_PWR_CTRL_0, TP_XD_LED# (21)

XD_RE#/CLK should shield GND. Close to CONN.

> 1 ms, >60 ns, >100 ns

VCC, GRST#, PRST#, PCLK(33MHz)

MMC

XD_WE#/MS_BS/SD_CMD R230 *2.7K_4, XD_D0/MS_D0/SD_D0 R235 *2.7K_4, XD_D1/MS_D1/SD_D1 R232 *2.7K_4, XD_D2/MS_D2/SD_D2 R236 *2.7K_4, XD_D3/MS_D3/SD_D3 R229 *2.7K_4

SD can't recognize issue in ES1 sample

SD_CDZ C322 *270P_4, MS_CDZ C323 *270P_4

Close to CONN.

Reduced external noise by FAE confirm

5 IN 1 CARD READER

REV_1C 3/23 Delete CN33, CN34

Reserve MS DUO card issue (For A-test only)

R346 0_4, Q31 *2N7002E, R224 *10K_4, Q34 *2N7002E, Q33 *2N7002E, R225 0_4

XD_D1/MS_D1/SD_D1, XD_D1/MS_D1/SD_D1_C, XD_D2/MS_D2/SD_D2_C, SD_CDZ, XD_D2/MS_D2/SD_D2, +5V

REV_1C 3/28 Del U26 and C352

SDA_CARD, SCL_CARD, R256 10K_4, R257 10K_4

CARDREADER POWER

Q17 2N7002, R237 10K_4, Q18 AO3403, MC_PWR_CTRL_0#, MC_PWR_CTRL_0, 30mil, R252 150K_4, C341 2.2U_6, VCC_XD, C315 .01U_4, C307 .01U_4, C309 .01U_4

U7 *G5241T1U, C335 *1U_4, C345 *4.7U_6

CN32 CARD_READER_PROCONN-MXP038-A0-4010

XD_D0/MS_D0/SD_D0, XD_D1/MS_D1/SD_D1_C, XD_D2/MS_D2/SD_D2_C, XD_D3/MS_D3/SD_D3, XD_RE#/CLK, XD_WE#/MS_BS/SD_CMD, SD_CDZ, XD_R/B#/SD_WP#, XD_D0/MS_D0/SD_D0, XD_D1/MS_D1/SD_D1, XD_D2/MS_D2/SD_D2, XD_D3/MS_D3/SD_D3, XD_RE#/CLK, MS_CDZ, XD_WE#/MS_BS/SD_CMD

MMC

1394

TPBIAS0, R251 56.2/F_4, R249 56.2/F_4, C360 .33U_6, C358 .01U_4

*CL-2M2012-121JT L32, RP66 0X2, RP65 0X2, *CL-2M2012-121JT L31

TPA0P, TPA0N, TPB0P, TPB0N, L1394 TPA0+, L1394 TPA0-, L1394 TPB0+, L1394 TPB0-

AS CLOSE AS POSSIBLE TO R5C833

R247 56.2/F_4, R243 56.2/F_4, 1394_COM, R242 5.1K/F_4, C337 270P_4

REV_1C 3/23 Modify_1394 footprint

CN35 SUY_020115FR004S518ZL

Check connector footprint

FIW

PROJECT : BU1(NAPA)
Quanta Computer Inc.

Size	Document Number	Rev
	R5C832/833(5IN1/1394)	1C

Date: Thursday, March 29, 2007 Sheet 18 of 28

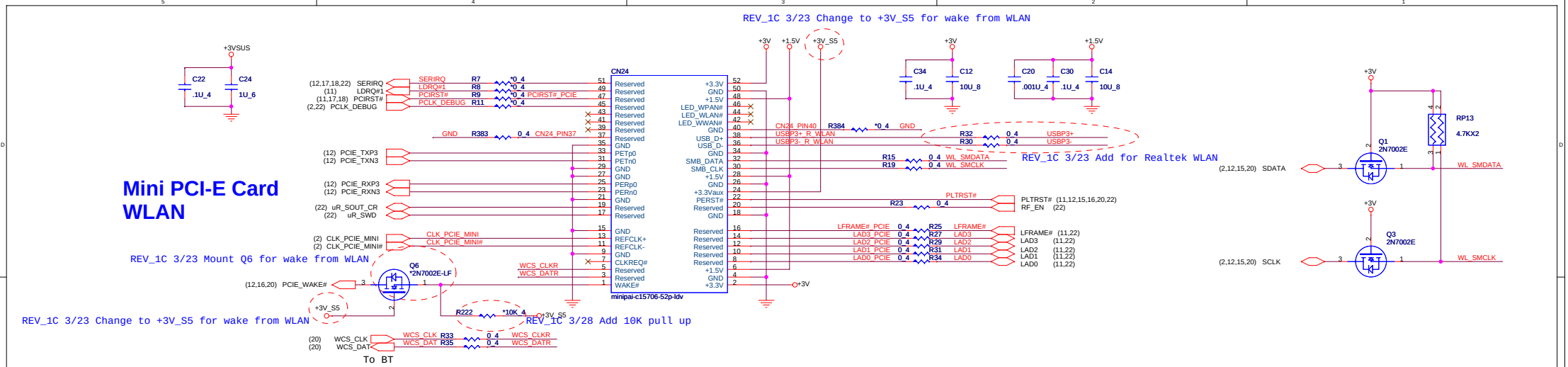

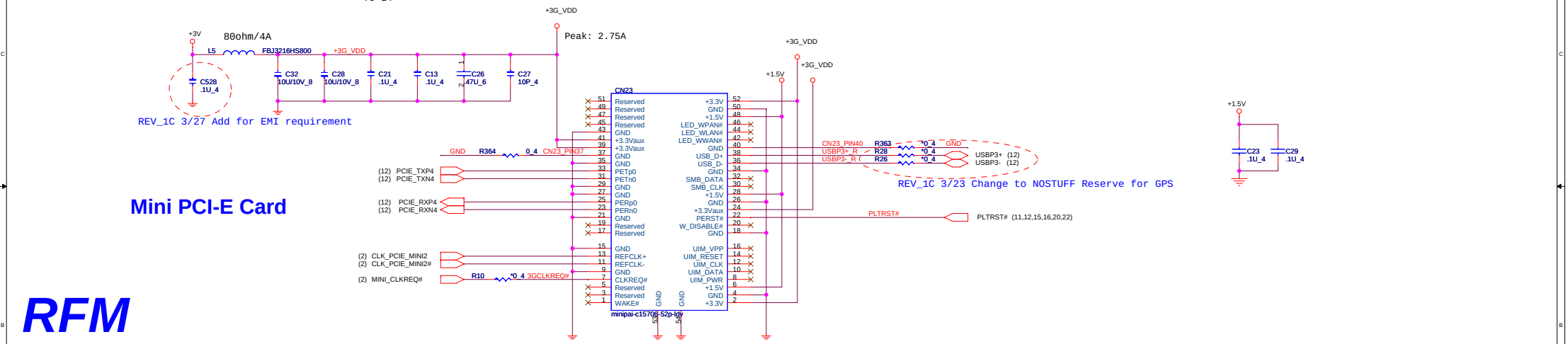

RFM

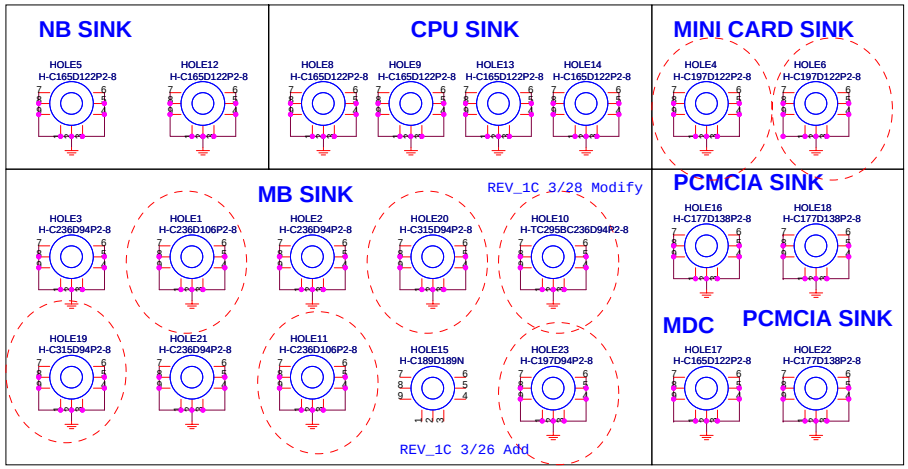

OTH

PROJECT : BU1(NAPA)
Quanta Computer Inc.

Size	Document Number	Rev
	MINI CARD/HOLE	1C

Date: Friday, March 30, 2007 Sheet 19 of 28

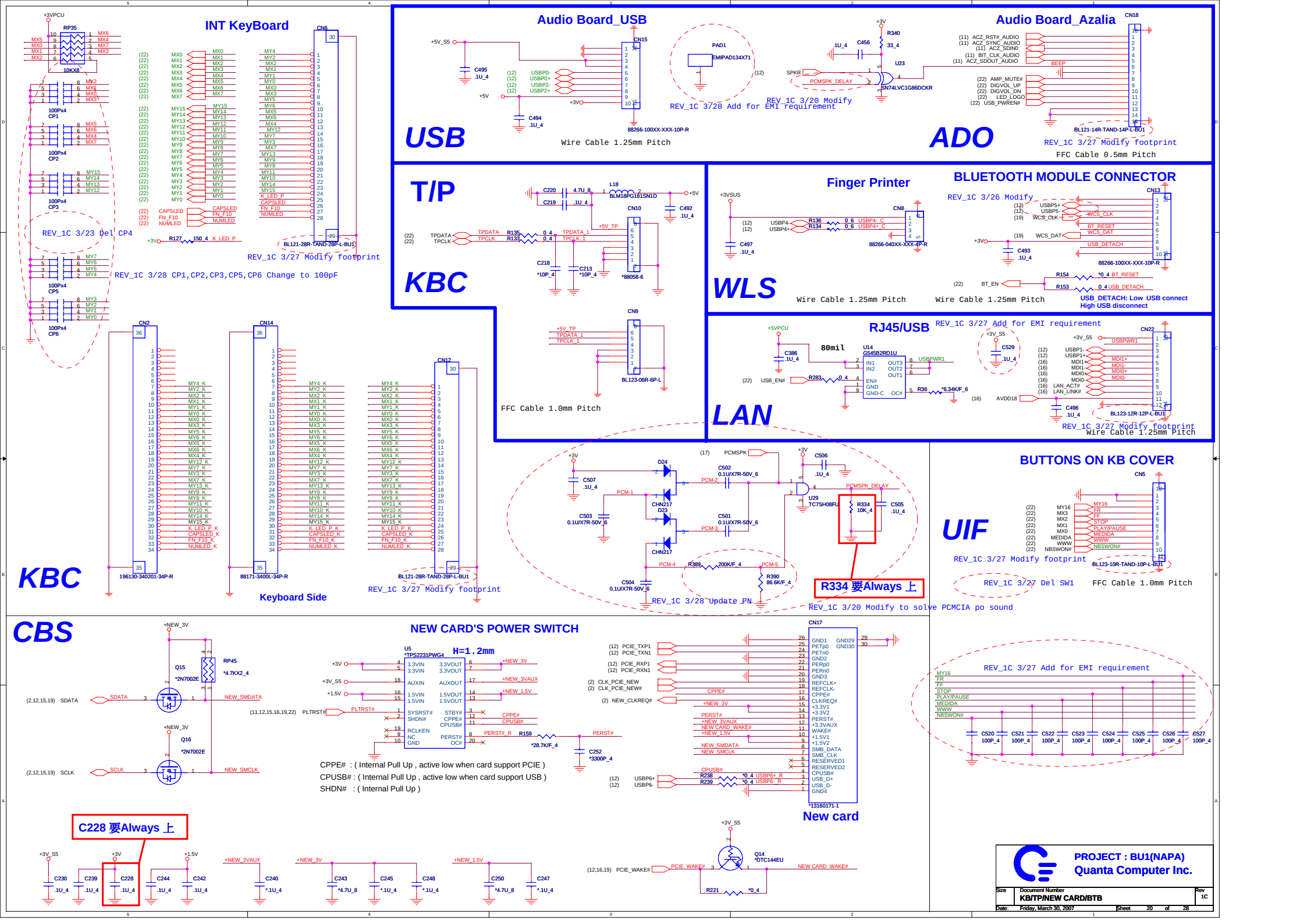
INT KeyBoard
RP35
10K8
CN6
BL121-28R-TAND-28P-L-BU1
REV_1C 3/23 Del CP4
REV_1C 3/27 Modify footprint
REV_1C 3/28 CP1,CP2,CP3,CP5,CP6 Change to 100pF
CN2
196130-340201-34P-R
CN14
88171-3400L-34P-R
Keyboard Side
CN12
BL121-28R-TAND-28P-L-BU1
REV_1C 3/27 Modify footprint
KBC
Audio Board_USB
USB
CN15
88266-100XX-XXX-10P-R
Wire Cable 1.25mm Pitch
PAD1
EMIPAD134X71
REV_1C 3/28 Add for EMI requirement
REV_1C 3/20 Modify
U23
SN74LVC1G86DCKR
Audio Board_Azalia
ADO
CN18
BL121-14R-TAND-14P-L-BU1
REV_1C 3/27 Modify footprint
FFC Cable 0.5mm Pitch
T/P
CN10
88058-6
CN9
BL123-06R-6P-L
FFC Cable 1.0mm Pitch
Finger Printer
CN8
88266-040XX-XXX-4P-R
WLS
Wire Cable 1.25mm Pitch
BLUETOOTH MODULE CONNECTOR
REV_1C 3/26 Modify
CN13
88266-100XX-XXX-10P-R
Wire Cable 1.25mm Pitch
USB_DETACH: Low USB connect
High USB disconnect
RJ45/USB
REV_1C 3/27 Add for EMI requirement
U14
G545B2RD1U
80mil
CN22
BL123-12R-12P-L-BU1
REV_1C 3/27 Modify footprint
Wire Cable 1.25mm Pitch
LAN
REV_1C 3/28 Update PN
R334 要Always 上
REV_1C 3/20 Modify to solve PCMCIA po sound
BUTTONS ON KB COVER
CN5
BL123-10R-TAND-10P-L-BU1
UIF
REV_1C 3/27 Modify footprint
REV_1C 3/27 Del SW1
FFC Cable 1.0mm Pitch
CBS
NEW CARD'S POWER SWITCH
U5
*TPS2231PWG4
H=1.2mm
CPPE# : (Internal Pull Up , active low when card support PCIE)
CPUSB# : (Internal Pull Up , active low when card support USB)
SHDN# : (Internal Pull Up)
CN17
*13160171-1
New card
REV_1C 3/27 Add for EMI requirement
C228 要Always 上
Q14
*DTC144EU
PROJECT : BU1(NAPA)
Quanta Computer Inc.
Document Number
KB/TP/NEW CARD/BTB
Rev 1C
Date: Friday, March 30, 2007
Sheet 20 of 28

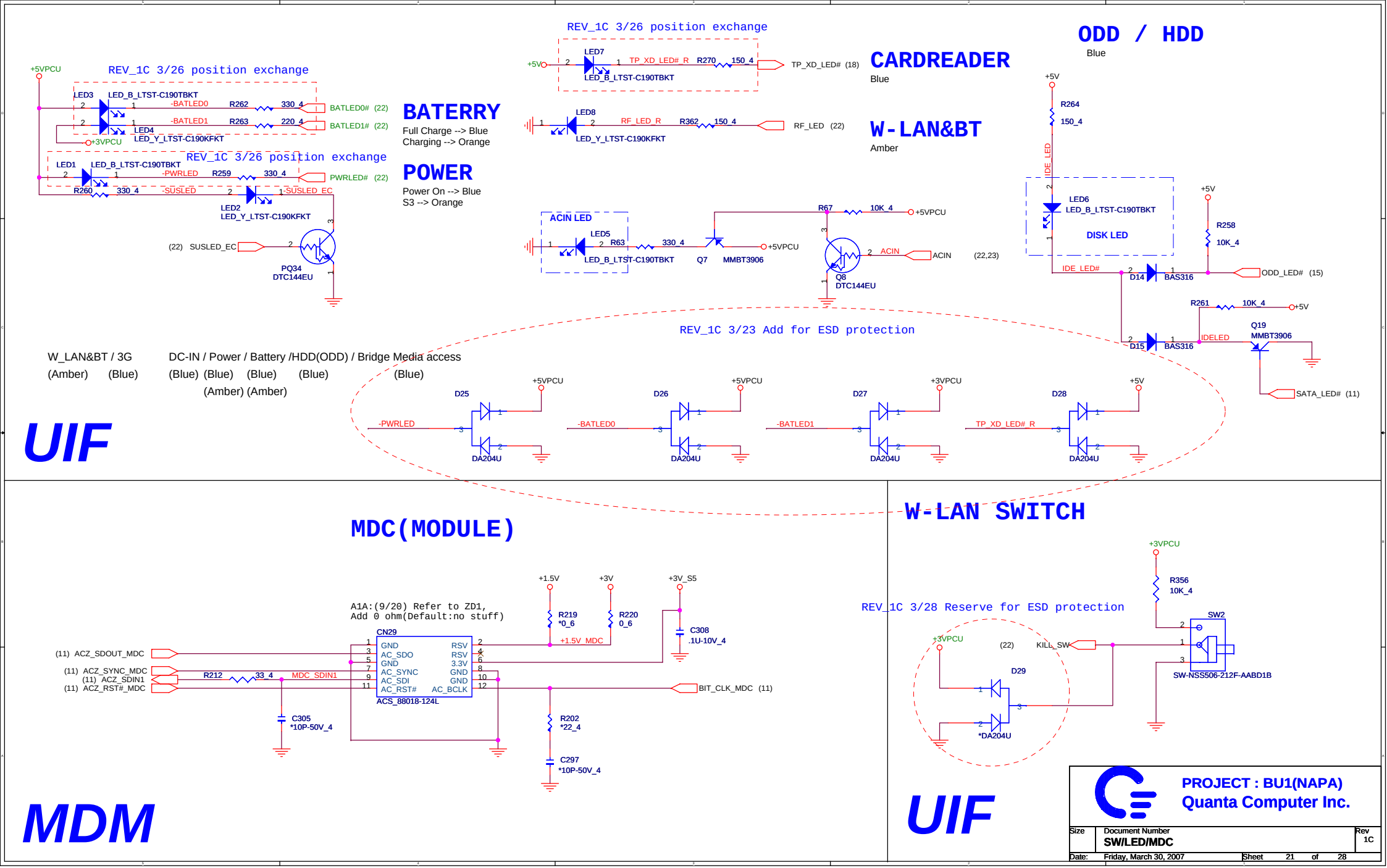
REV_1C 3/26 position exchange
+5VPCU
LED3
LED_B_LTST-C190TBKT
-BATLED0
R262
330_4
BATLED0# (22)
-BATLED1
R263
220_4
BATLED1# (22)
LED4
LED_Y_LTST-C190KFKT
+3VPCU
REV_1C 3/26 position exchange
LED1
LED_B_LTST-C190TBKT
-PWRLED
R259
330_4
PWRLED# (22)
R260
330_4
-SUSLED
-SUSLED_EC
LED2
LED_Y_LTST-C190KFKT
(22) SUSLED_EC
PQ34
DTC144EU
BATERRY
Full Charge --> Blue
Charging --> Orange
POWER
Power On --> Blue
S3 --> Orange
REV_1C 3/26 position exchange
+5V
LED7
TP_XD_LED# R
R270
150_4
TP_XD_LED# (18)
LED_B_LTST-C190TBKT
LED8
RF_LED_R
R362
150_4
RF_LED (22)
LED_Y_LTST-C190KFKT
CARDREADER
Blue
W-LAN&BT
Amber
ODD / HDD
Blue
+5V
R264
150_4
IDE_LED
LED6
LED_B_LTST-C190TBKT
DISK LED
+5V
R258
10K_4
IDE_LED#
D14
BAS316
ODD_LED# (15)
R261
10K_4
+5V
D15
BAS316
IDELED
Q19
MMBT3906
SATA_LED# (11)
ACIN LED
LED5
R63
330_4
LED_B_LTST-C190TBKT
Q7
MMBT3906
+5VPCU
R67
10K_4
+5VPCU
ACIN
ACIN (22,23)
Q8
DTC144EU
REV_1C 3/23 Add for ESD protection
W_LAN&BT / 3G
(Amber) (Blue)
DC-IN / Power / Battery /HDD(ODD) / Bridge Media access
(Blue) (Blue) (Blue) (Blue) (Blue)
(Amber) (Amber)
D25
+5VPCU
-PWRLED
DA204U
D26
+5VPCU
-BATLED0
DA204U
D27
+3VPCU
-BATLED1
DA204U
D28
+5V
TP_XD_LED# R
DA204U
UIF
MDC(MODULE)
A1A:(9/20) Refer to ZD1,
Add 0 ohm(Default:no stuff)
CN29
GND
AC_SDO
GND
AC_SYNC
AC_SDI
AC_RST#
RSV
RSV
3.3V
GND
GND
AC_BCLK
ACS_88018-124L
(11) ACZ_SDOUT_MDC
(11) ACZ_SYNC_MDC
(11) ACZ_SDIN1
(11) ACZ_RST#_MDC
R212
33_4
MDC_SDIN1
C305
*10P-50V_4
+1.5V
+3V
+3V_S5
R219
*0_6
R220
0_6
+1.5V_MDC
C308
.1U-10V_4
BIT_CLK_MDC (11)
R202
*22_4
C297
*10P-50V_4
MDM
W-LAN SWITCH
REV_1C 3/28 Reserve for ESD protection
+3VPCU
R356
10K_4
SW2
+3VPCU
(22) KILL_SW
D29
*DA204U
SW-NSS506-212F-AABD1B
UIF
PROJECT : BU1(NAPA)
Quanta Computer Inc.
Size
Document Number
SW/LED/MDC
Rev
1C
Date: Friday, March 30, 2007
Sheet 21 of 28

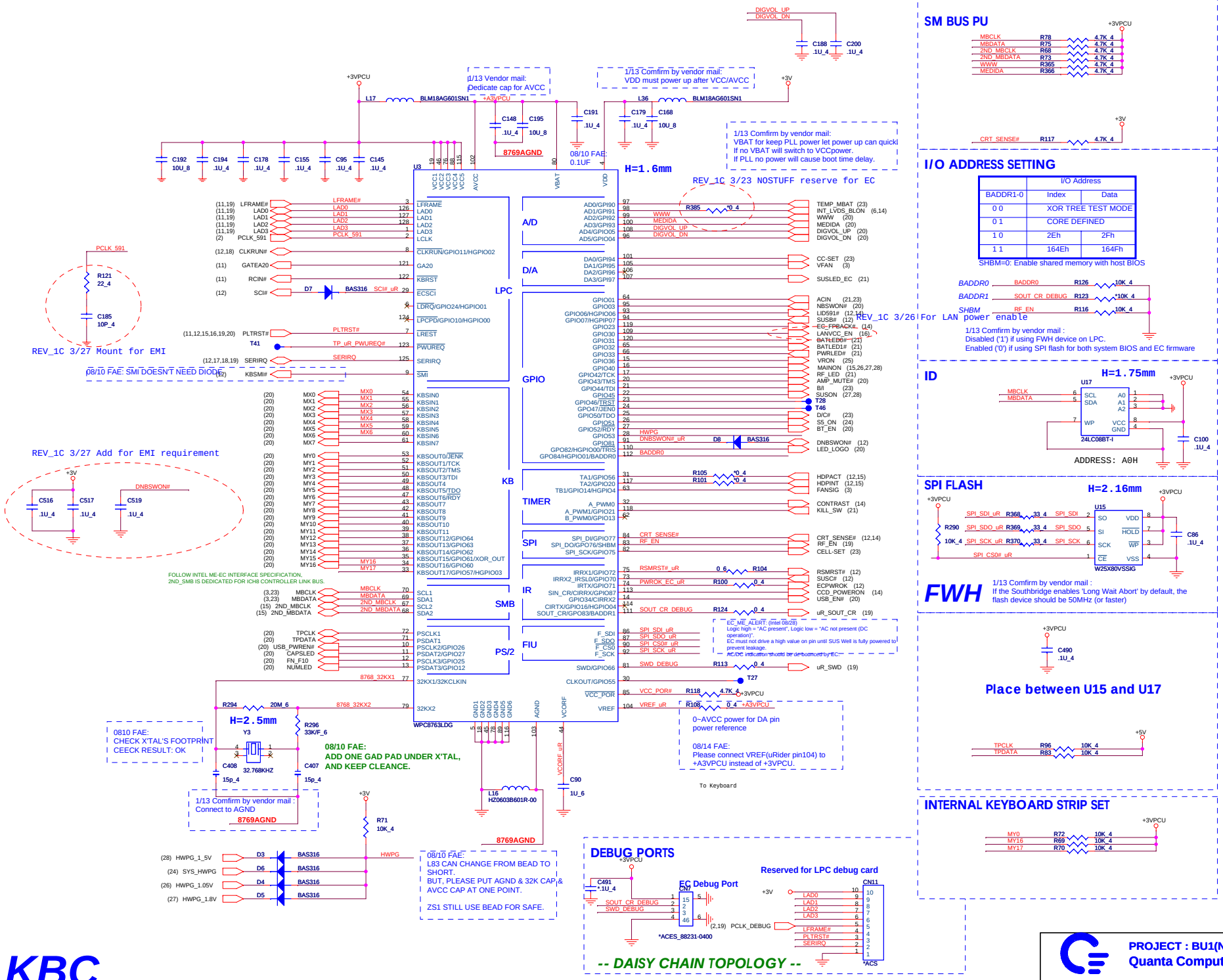

BADDR1-0	I/O Address Index	I/O Address Data
0 0	XOR TREE TEST MODE	
0 1	CORE DEFINED	
1 0	2Eh	2Fh
1 1	164Eh	164Fh

SHBM=0: Enable shared memory with host BIOS

ADDRESS: A0H

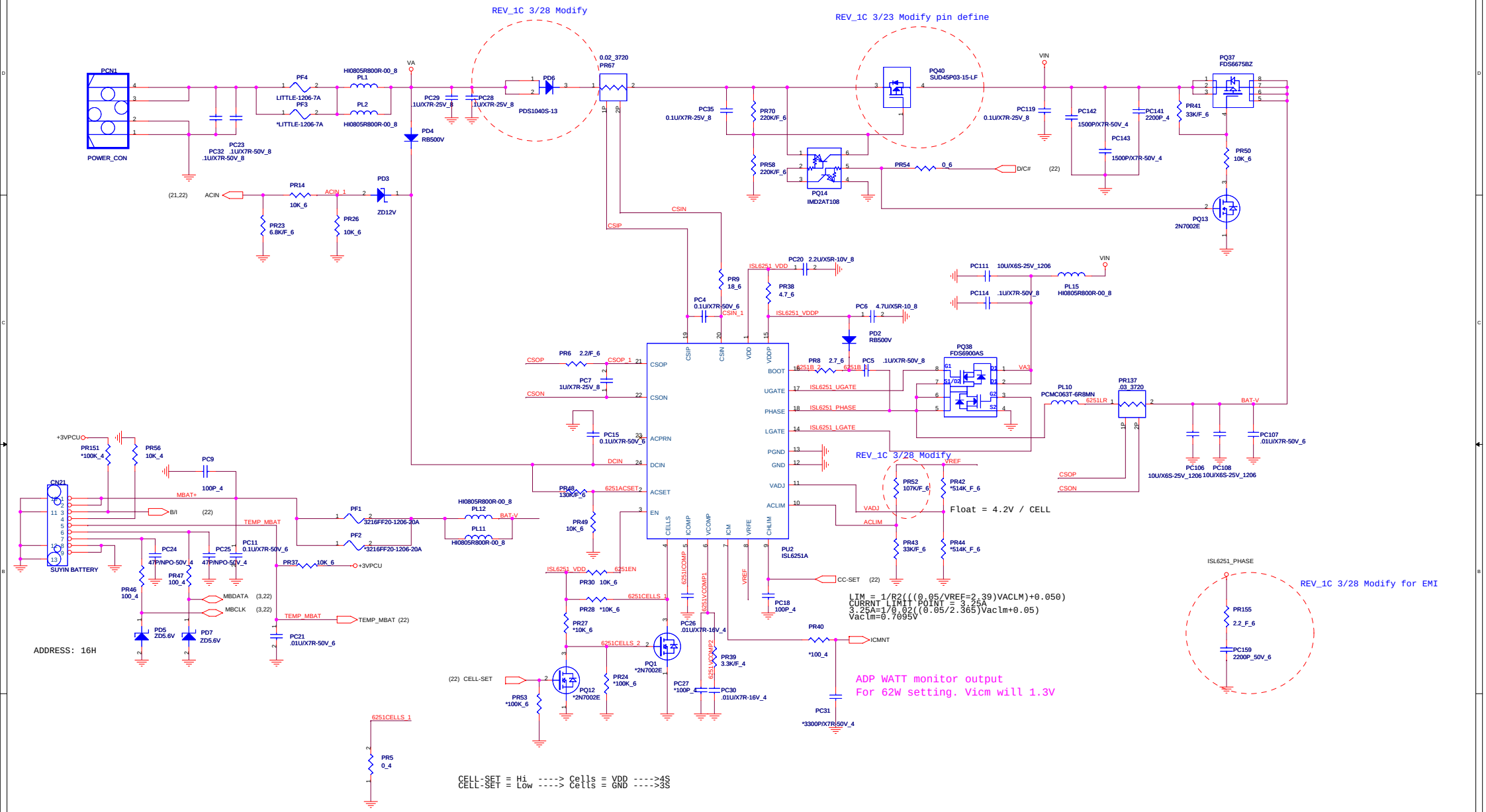

Size	Document Number		Rev
	CHARGER(ISL6251)		1C
Date:	Friday, March 30, 2007	Sheet 23 of 28	

PROJECT : BU1(NAPA)
Quanta Computer Inc.

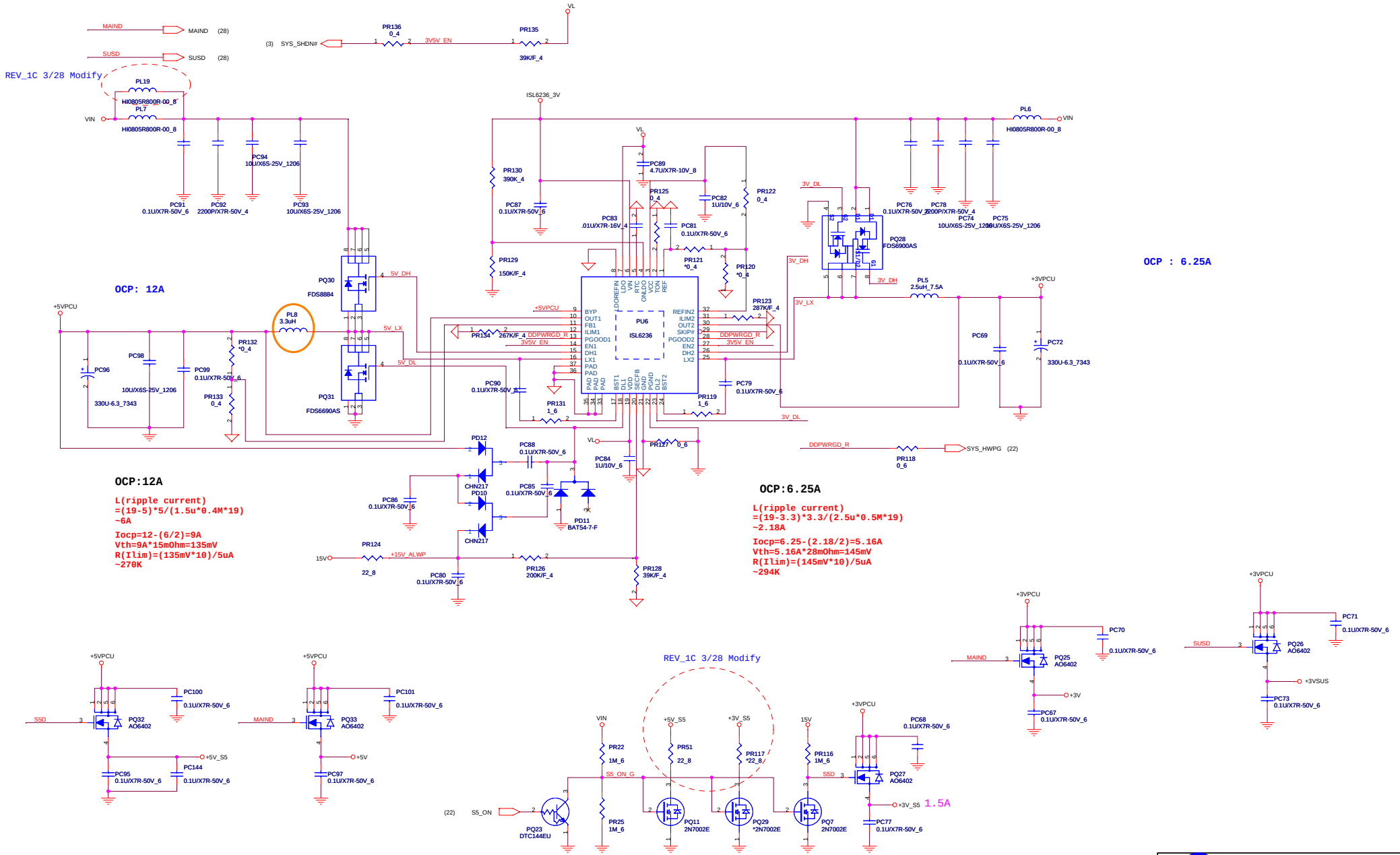

PROJECT : BU1(NAPA)
Quanta Computer Inc.

Size	Document Number	Rev
	SYSTEM 5V/3V	1C

Date: Thursday, March 29, 2007 Sheet 24 of 28

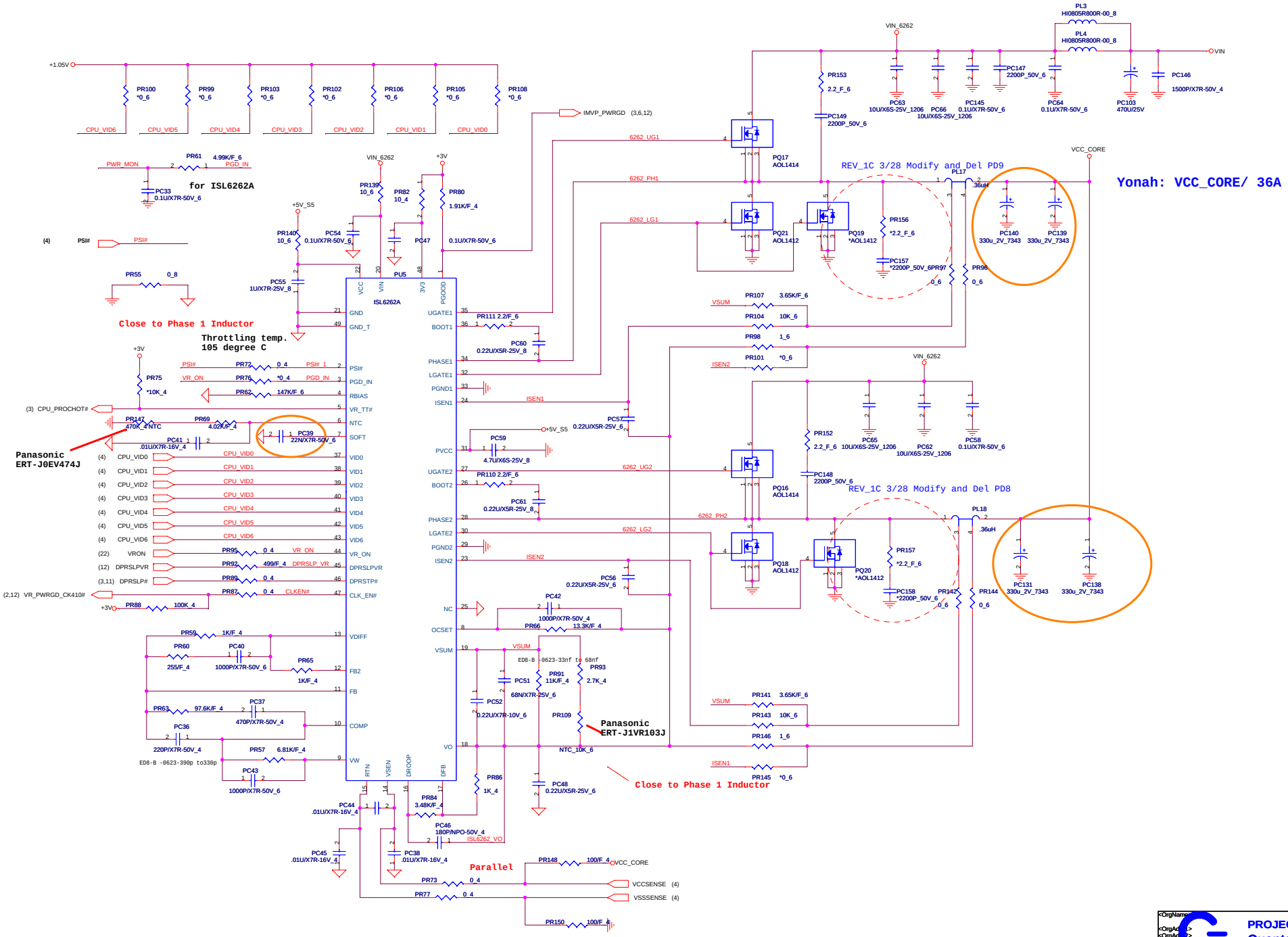
for ISL6262A
ISL6262A
PU5
Close to Phase 1 Inductor
Throttling temp.
105 degree C
Panasonic
ERT-J0EV474J
Panasonic
ERT-J1VR103J
Parallel
REV_1C 3/28 Modify and Del PD9
REV_1C 3/28 Modify and Del PD8
Yonah: VCC_CORE/ 36A
VCC_CORE
VIN
VIN_6262
+1.05V
+3V
+5V_S5
IMVP_PWRGD (3,6,12)
6262_UG1
6262_PH1
6262_LG1
6262_UG2
6262_PH2
6262_LG2
ISL6262_VO
VCCSENSE (4)
VSSSENSE (4)
PROJECT : BU1(NAPA)
Quanta Computer Inc.
Size
Document Number
CPU CAORE (6262A)
Rev
1C
Date: Friday, March 30, 2007
Sheet 25 of 28

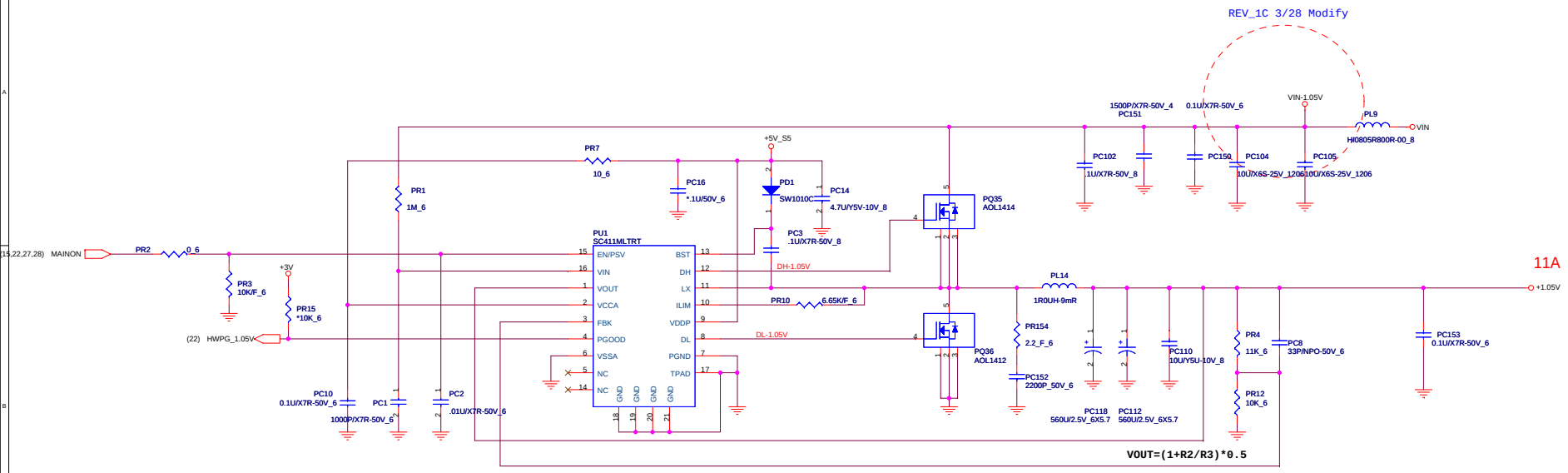

PROJECT : BU1(NAPA)
Quanta Computer Inc.

Size	Document Number	Rev
	VTT 1.05V (SC11)	1C

Date: Thursday, March 29, 2007 Sheet 26 of 28

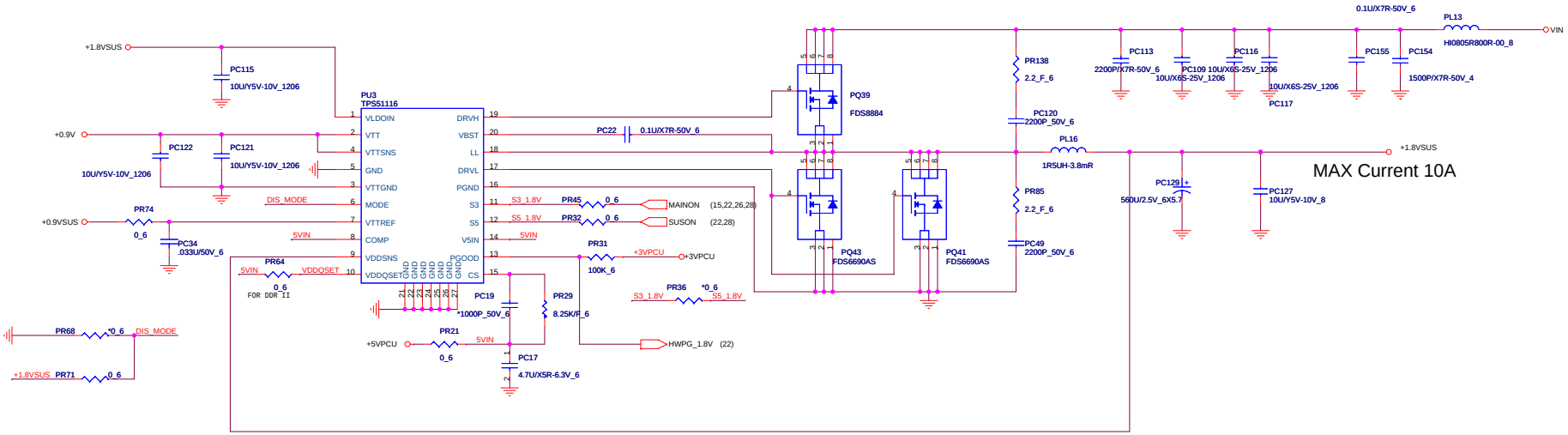

PROJECT : BU1(NAPA)
Quanta Computer Inc.

Size	Document Number	Rev
	DDR2 1.8V(TP1116)	1C

Date: Thursday, March 29, 2007 Sheet 27 of 28

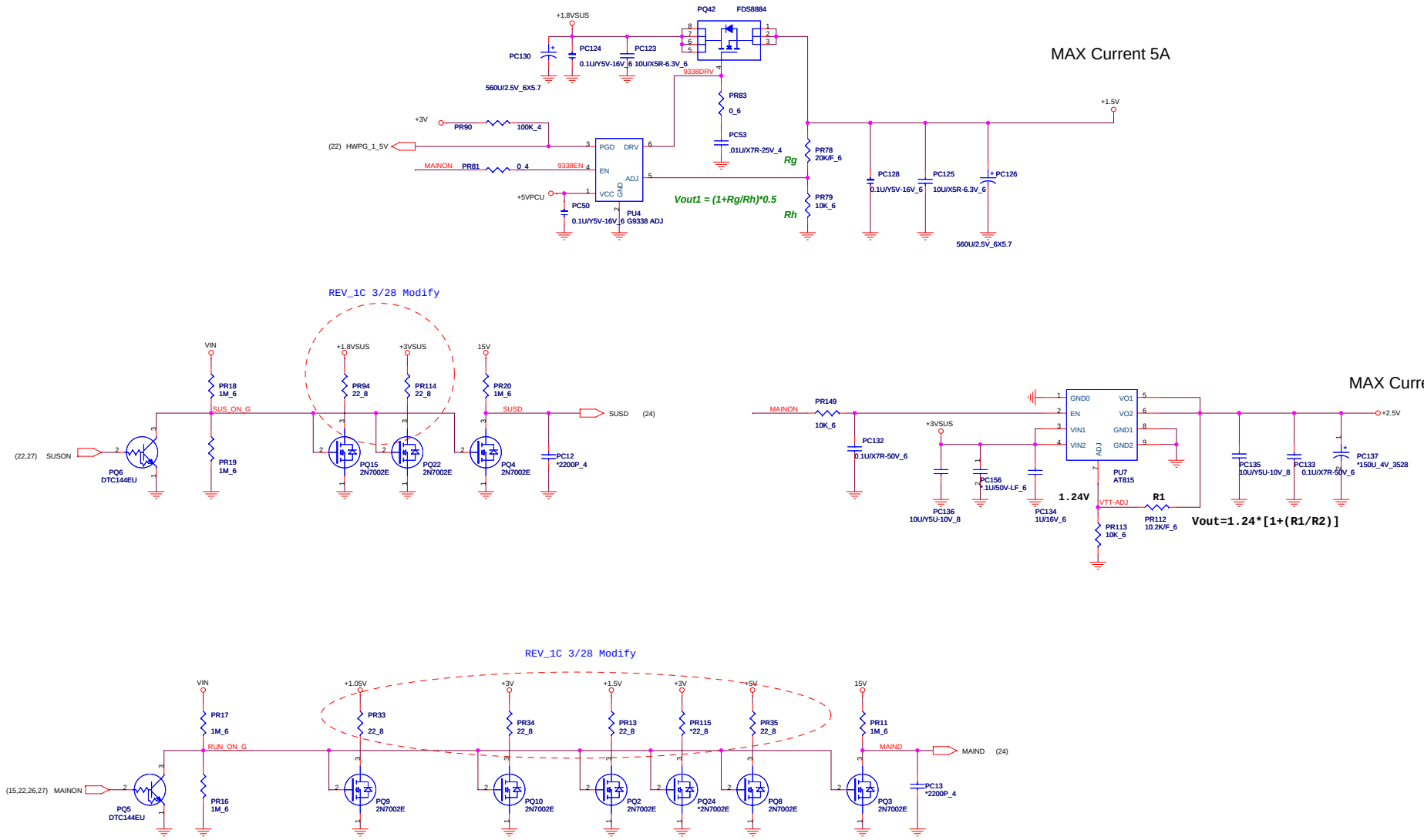

PROJECT : BU1(NAPA)
Quanta Computer Inc.

Size	Document Number	Rev
	DISCHARGE/1.5V/2.5V	1C

Date: Friday, March 30, 2007 Sheet 28 of 28

Model	REV	DATE	CHANGE LIST	NOTE	MODEL / Page	BU1 FROM	BU1 To
		20061218	**FIRST RELEASED: E20061218**				
BU1 (NAPA)	A	2006/12/22	Page02: U1001 PCIE3 pair connect change to WLAN	Circuit modify	1	1A	
			Page02: U1001 PCIE4 pair connect change to 3G module	Circuit modify	2	1A	
			Page02: U1001 pin33 connect to 3G module CLKREQ# pin	Circuit modify	3	1A	
			Page03: Del R1038	Q1006 pin3 already has pull-up resistor	4	1A	
			Page03: Del R382,R383,Q60 and D39	Circuit modify	5	1A	
			Page03: U28 pin1 connect to MAX6648_OV# directly	Circuit modify	6	1A	
			Page06: U1003 pin"D32" connect to CN43 to control LCD backlight (Back-up solution)	Circuit modify	7	1A	
			Page12: Reserve R1222 connect to GND		8	1A	
			Page12: Del R1189	Already pull-up in the Page22	9	1A	
			Page12: Add signal HDPACT connect to G-Sensor controller		10	1A	
			Page12: Add signal HDPINT connect to G-Sensor controller		11	1A	
			Page14: Add second (LED backlight) solution	Circuit modify	12	1A	
			Page15: Change G-Sensor solution	Circuit modify	13	1A	
			Page19: Modify screw holes to make the same with BU1		14	1A	
			Page20: Add R1223 and C1273	Reserve for EMI	15	1A	
			Page20: Add C810		16	1A	
			Page21: Change the connection of the ODD/HDD LED circuit	To prevent the voltage leakage	17	1A	
			Page22: Signal HWPG_CPUIO change name to HWPG_1.5V		18	1A	
			Page22: Del D64	We don't have HWPG_1.5V signal	19	1A	
			Page26: Mount PR109	HWPG_1.05V is open-drain signal	20	1A	
		2006/12/25	Page14: Change LCD connector pin define	Circuit modify	21	1A	
			Page15: Add C97 for ODD power and C98 for SATA power	Circuit modify	22	1A	
			Page18: Reserve D1006 for LPC_PD# function	Circuit modify	23	1A	
			Page19: Del R729, R730	WLAN don't support USB signals	24	1A	
			Page22: Add R765 and R766 for reserve the G-sensor	Circuit modify	25	1A	
			Page23: Del PL2,3,8,9 and add PF1~4	Power circuit modify	26	1A	
			Page24: Del power jump of +3VPCU and +5VPCU	Power circuit modify	27	1A	
			Page26: Add PR156	Power circuit modify	28	1A	
			Page28: Del power jump of +1.5V and +2.5V	Power circuit modify			
		2006/12/28	Page14: Add C1284	Circuit modify			
			Page15: Del R1226	Circuit modify			
		2007/01/03	**FIRST RELEASED GERBER FILE(RE-NAME)**				
		2007/01/24					

QUANTA COMPUTER INC	PROJECT MODEL :	BU1	APPROVED BY:	Vic Lin #15598	DATE:	2007/01/04	DOC NO. 204
	PART NUMBER:	31BU1MB0010	DRAWING BY:	Jack Lin #17535	REVISON:	1A	SHEET: 1 of 3

PROJECT : BU1(NAPA)
Quanta Computer Inc.

Size	Document Number	Rev
	Change List A	1A

Date: Thursday, March 29, 2007 Sheet 29 of 29

Model	REV	DATE	CHANGE LIST	NOTE
		20061218	FIRST RELEASED: E20061218	
BU1 (NAPA)	B	2007/01/24	Page02: Add R382 and connect to PCLK_DEBUG	Circuit modify
			Page03: Change Thermal Protect Schematic	Circuit modify
			Page09: Add C486	Circuit modify
			Page11: Add R367 and R194 change to 8.66K	Circuit modify
			Page14: Change LED type panel schematic	Circuit modify
			Page20: CN18 change to 16 pin and add a LED_LOGO signal	Circuit modify
			Page22: Add R365, R366	Circuit modify
			Page22: Add R368~R370	Circuit modify
		2007/01/29	Page14: Add F2	Customer require
			Page14: Add C487,C488,C489,C498,L34 and L35	EMI suggestion
			Page19: Add R363,R364,R383,R384	Circuit modify
			Page20: Add CP3~CP6	EMI suggestion
			Page20: Add CN2	Add second source
			Page20: Add C492~C497	EMI suggestion
			Page20: CN15 change to 10pin and connect one more +5V_S5 and GND	Circuit modify
			Page20: CN18 change to 16pin and connect one more LED_LOGO and USB_PWREN# signal to EC	Circuit modify
			Page21: R263 and R356 connect change to +3VPCU	Circuit modify
			Page22: Add R490,R491 and L36	EMI suggestion
			Page22: Add R385 and connect to INT_LVDS_BLON signal	Circuit modify
			Page23: Add PR151 and PR56 connect to B/I signal	Circuit modify
			Page23: PQ40 change type	Circuit modify
			Page23: Add PC141~PC143	EMI suggestion
			Page24: Add PC144	EMI suggestion
			Page25: Add PC145~PC149 and PR152,PR153	EMI suggestion
			Page26: Add PC150~PC153 and PR154	EMI suggestion
			Page27: Add PC154,PC155	EMI suggestion
			Page28: Add PC156	EMI suggestion
		2007/01/30	Page09: Add C500	Circuit modify
			Page09: Add U28 for G-Sensor controller reset	Circuit modify
		2007/01/31	Page19: Del SIM card function	Circuit modify
			Page20: Del FM tuner interface	Circuit modify
			Page21: Del 3G LED	Circuit modify
		2007/02/01	Page14: Add R12,R16,C15,C316	Circuit modify
			Page15: Add R361,R386,R387,R388	Circuit modify
			Page19: Add HOLE22	Circuit modify

MODEL / Page	BU1 FROM	BU1 To
1	1A	1B
2	1A	1B
3	1A	1B
4	1A	1B
5	1A	1B
6	1A	1B
7	1A	1B
8	1A	1B
9	1A	1B
10	1A	1B
11	1A	1B
12	1A	1B
13	1A	1B
14	1A	1B
15	1A	1B
16	1A	1B
17	1A	1B
18	1A	1B
19	1A	1B
20	1A	1B
21	1A	1B
22	1A	1B
23	1A	1B
24	1A	1B
25	1A	1B
26	1A	1B
27	1A	1B
28	1A	1B
29	1A	1B

QUANTA COMPUTER INC

PROJECT MODEL :	BU1	APPROVED BY:	Vic Lin #15598	DATE:	2007/01/24	DOC NO. 204
PART NUMBER:		DRAWING BY:	Jack Lin #17535	REVISON:	1B	SHEET: 2 of 23

PROJECT : BU1(NAPA)
Quanta Computer Inc.

Size	Document Number	Rev
	Change List A to B	1B

Date: Thursday, March 29, 2007 Sheet 29 of 29

Model	REV	DATE	CHANGE LIST	NOTE
		20061218	FIRST RELEASED: E20061218	
BU1 (NAPA)	C	2007/03/20	Page14: D1 and F2 exchange position	Circuit modify
			Page20: Add U29, D23, D24, C501~C507, R389, R390	To solve insert PCMCIA Card speaker has bo sound
		2007/03/23	Page03: Add C513	Circuit modify
			Page11: Add C508~C512	Reserve for EMI
			Page18: Del CN33, CN34	Can't placement in the latest ME drawing
			Page19: Add R30, R32	Reserve for Realtek WLAN card
			Page19: Mount Q6	Circuit modify
			Page20: Del CP4	Circuit modify
			Page21: Add D25~D28	For ESD protection
			Page22: R385 change to NOSTUFF	EC don't need this function
		2007/03/25	Page16: Add Q2, C514, C515	Circuit modify
			Page23: PQ40 change footprint	Circuit modify
		2007/03/26	Page14: C4,C5,C6,C8,C9,C10 modify value to 10pF	Circuit modify
			Page14: L2,L3,L4 modify value	Circuit modify
			Page21: LED1& R259, LED3 & R262, LED4 & R263, LED7 & R270 position exchange	Circuit modify
		2007/03/27	Page16: Add C518 0.1uF	For EMI requirement
			Page19: Add C528 0.1uF	For EMI requirement
			Page20: CN6,CN12,CN18,CN22 modify footprint	Circuit modify
			Page20: Add C520~C527 100pF and C529 0.1uF	For EMI requirement
			Page20: Del SW1	Don't need this function
			Page22: Add C516,C517,C519 0.1uF	For EMI requirement
		2007/03/28	Page18: Del U26 and C352	Circuit modify
			Page19: HOLE12 modify footprint	Circuit modify
			Page19: HOLE12 modify footprint	
			Page20: Add PAD1	For EMI requirement

MODEL / Page	BU1 FROM	BU1 To
1	1B	1C
2	1B	1C
3	1B	1C
4	1B	1C
5	1B	1C
6	1B	1C
7	1B	1C
8	1B	1C
9	1B	1C
10	1B	1C
11	1B	1C
12	1B	1C
13	1B	1C
14	1B	1C
15	1B	1C
16	1B	1C
17	1B	1C
18	1B	1C
19	1B	1C
20	1B	1C
21	1B	1C
22	1B	1C
23	1B	1C
24	1B	1C
25	1B	1C
26	1B	1C
27	1B	1C
28	1B	1C
29	1B	1C

QUANTA COMPUTER INC

PROJECT MODEL :	BU1	APPROVED BY:	Vic Lin #15598	DATE:	2007/03/23	DOC NO. 204
PART NUMBER:		DRAWING BY:	Jack Lin #17535	REVISON:	1C	SHEET: 3 of 3

PROJECT : BU1(NAPA)
Quanta Computer Inc.

Size	Document Number	Rev
	Change List A to B	1B

Date: Thursday, March 29, 2007 Sheet 29 of 29