BD1 BLOCK DIAGRAM

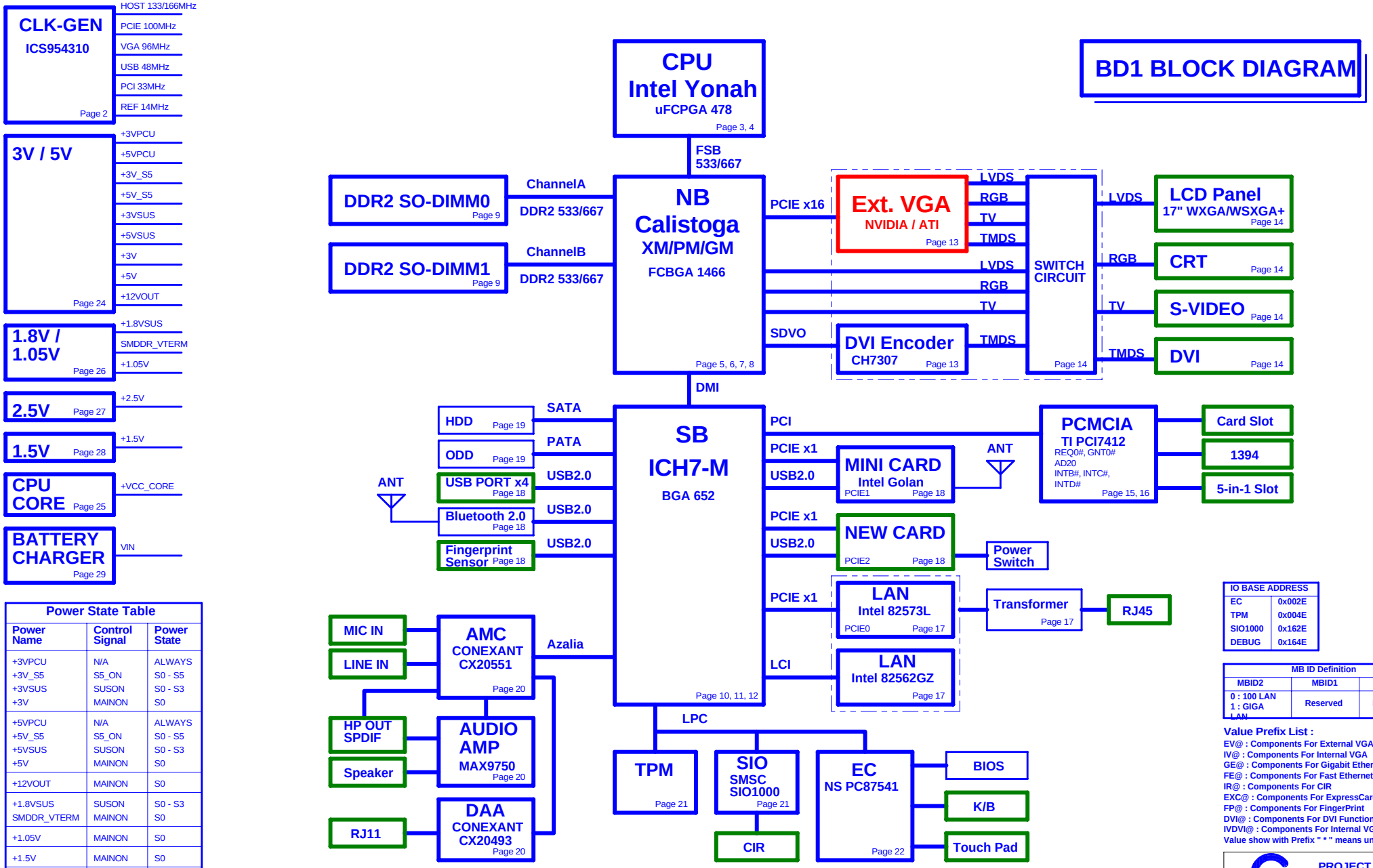

Power State Table

Power Name	Control Signal	Power State
+3VPCU +3V_S5 +3VSUS +3V	N/A S5_ON SUSON MAINON	ALWAYS S0 - S5 S0 - S3 S0
+5VPCU +5V_S5 +5VSUS +5V	N/A S5_ON SUSON MAINON	ALWAYS S0 - S5 S0 - S3 S0
+12VOUT	MAINON	S0
+1.8VSUS SMDDR_VTERM	SUSON MAINON	S0 - S3 S0
+1.05V	MAINON	S0
+1.5V	MAINON	S0
+2.5V	MAINON	S0
+VCC_CORE	VRON	S0

IO BASE ADDRESS	
EC	0x002E
TPM	0x004E
SIO1000	0x162E
DEBUG	0x164E

MB ID Definition		
MBID2	MBID1	MBID0
0 : 100 LAN 1 : GIGA LAN	Reserved	Reserved

Value Prefix List :

EV@ : Components For External VGA
IV@ : Components For Internal VGA
GE@ : Components For Gigabit Ethernet
FE@ : Components For Fast Ethernet
IR@ : Components For CIR
EXC@ : Components For ExpressCard
FP@ : Components For FingerPrint
DVI@ : Components For DVI Function
IVDVI@ : Components For Internal VGA DVI Fucntion
Value show with Prefix " * " means unstuff parts

PROJECT :BD1
Quanta Computer Inc.

Size	Document Number	Rev
	BLOCK DIAGRAM	3B

Date: Monday, December 12, 2005 Sheet 1 of 32

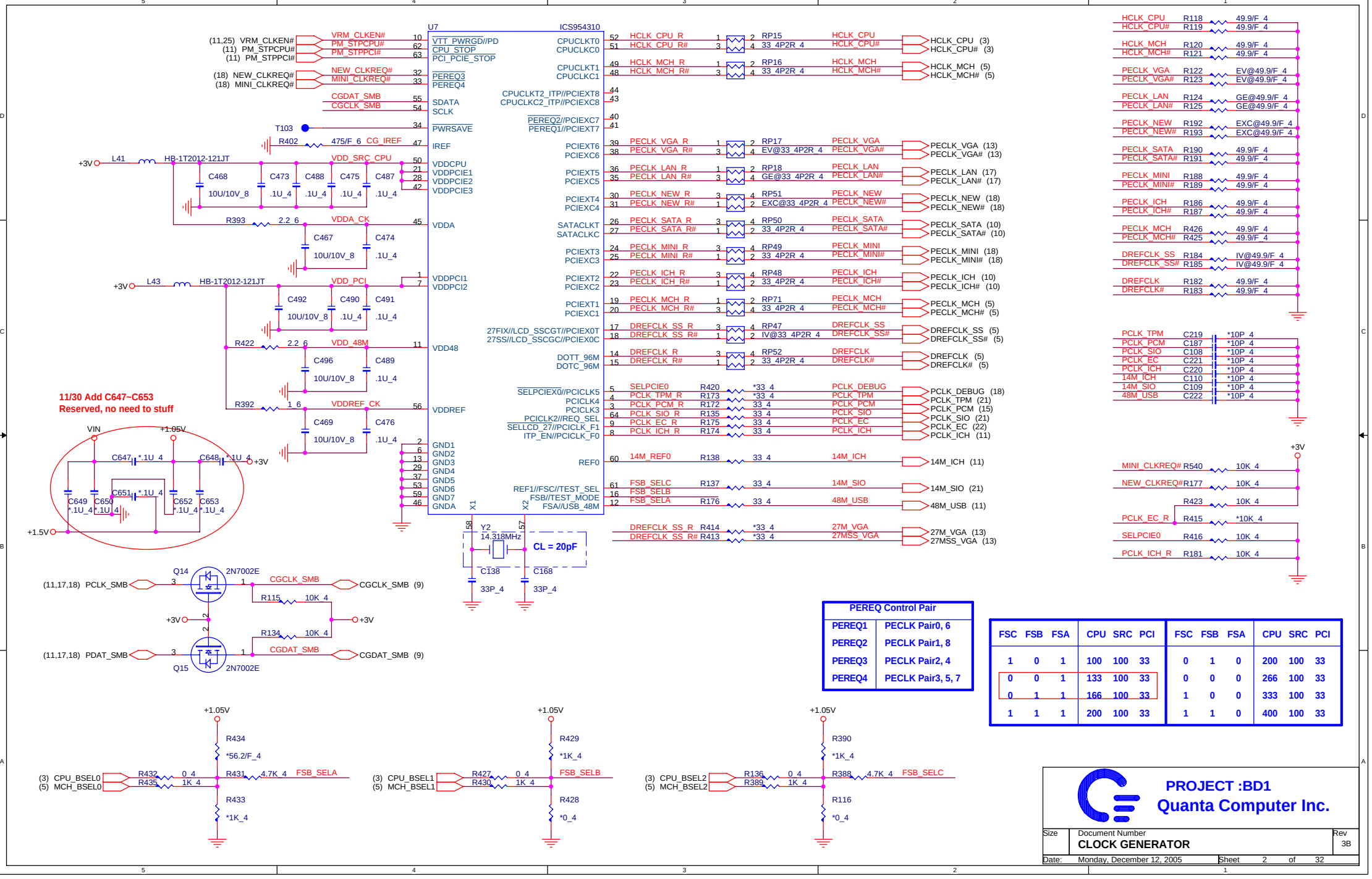

PEREQ Control Pair	
PEREQ1	PECLK Pair0, 6
PEREQ2	PECLK Pair1, 8
PEREQ3	PECLK Pair2, 4
PEREQ4	PECLK Pair3, 5, 7

FSC	FSB	FSA	CPU	SRC	PCI	FSC	FSB	FSA	CPU	SRC	PCI
1	0	1	100	100	33	0	1	0	200	100	33
0	0	1	133	100	33	0	0	0	266	100	33
0	1	1	166	100	33	1	0	0	333	100	33
1	1	1	200	100	33	1	1	0	400	100	33

PROJECT :BD1
Quanta Computer Inc.

Size	Document Number	Rev
	CLOCK GENERATOR	3B

Date: Monday, December 12, 2005 Sheet 2 of 32

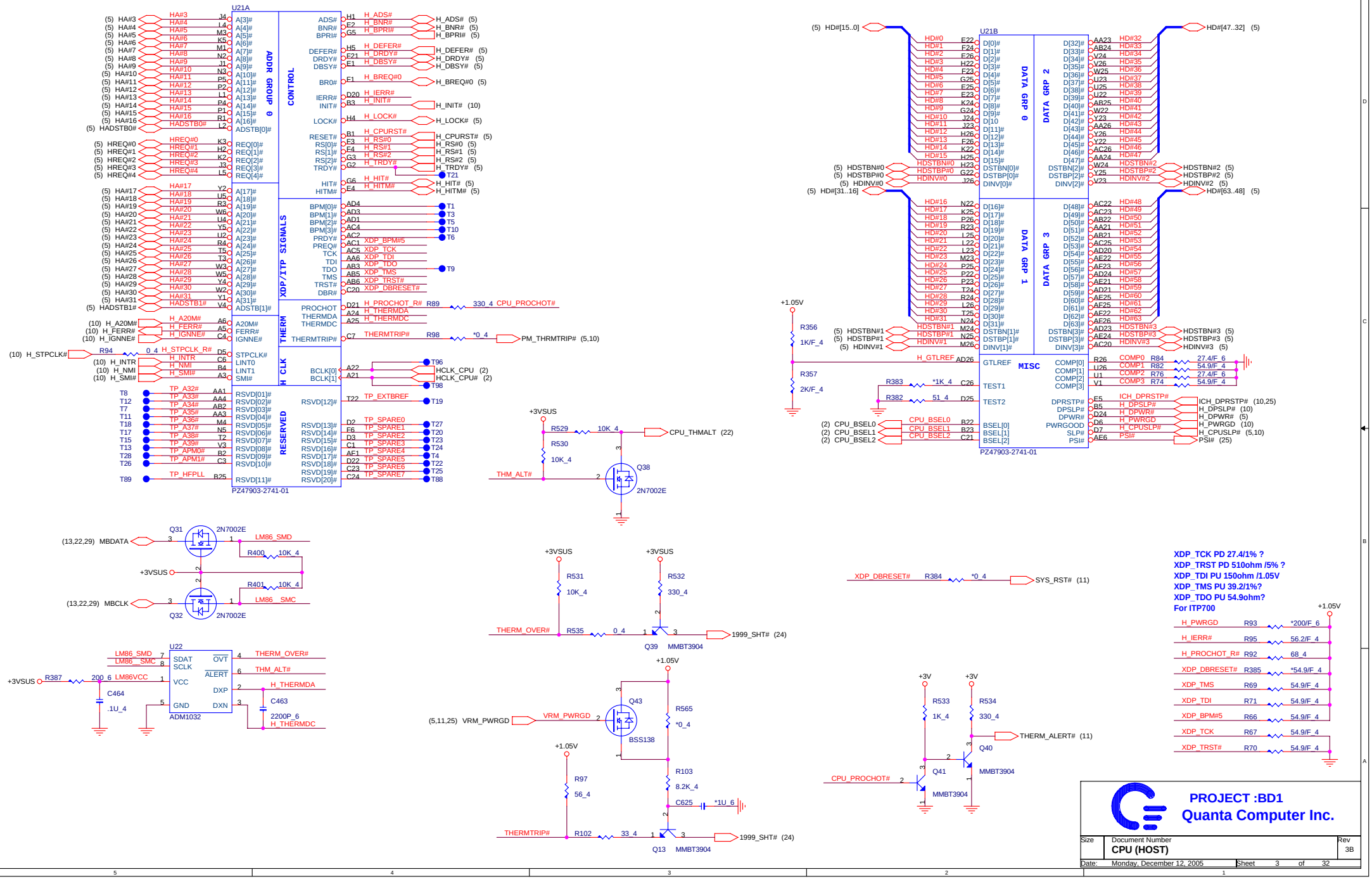
U21A
ADDR GROUP 0
CONTROL
XDP/ITP SIGNALS
THERM
H CLK
RESERVED
PZ47903-2741-01
U21B
DATA GRP 0
DATA GRP 2
DATA GRP 1
DATA GRP 3
MISC
PZ47903-2741-01
U22
ADM1032
XDP_TCK PD 27.4/1% ?
XDP_TRST PD 510ohm /5% ?
XDP_TDI PU 150ohm /1.05V
XDP_TMS PU 39.2/1%?
XDP_TDO PU 54.9ohm?
For ITP700
PROJECT :BD1
Quanta Computer Inc.
Size
Document Number
CPU (HOST)
Rev
3B
Date: Monday, December 12, 2005
Sheet 3 of 32

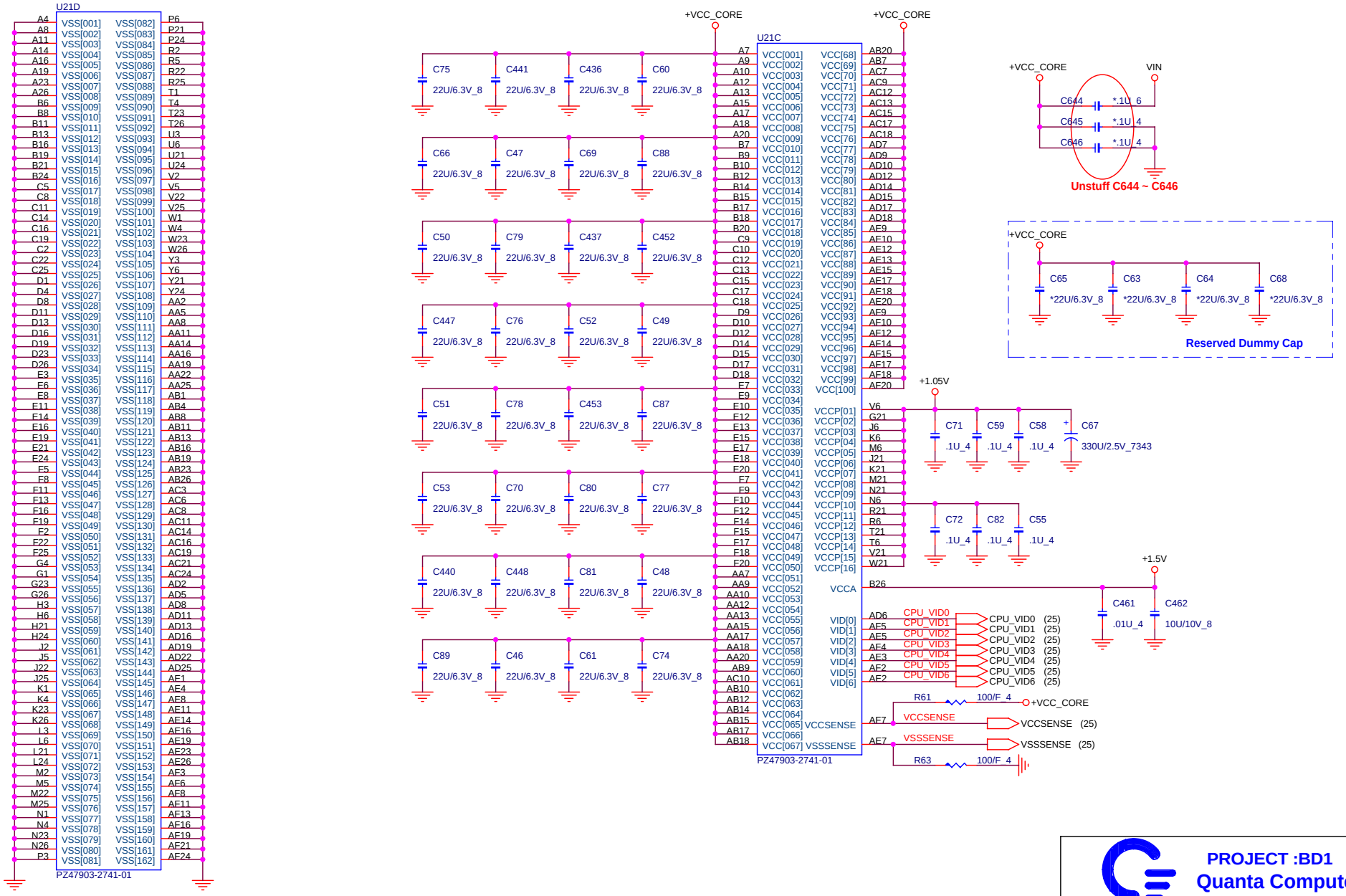

PROJECT :BD1

Quanta Computer Inc.

Size	Document Number	Rev
	CPU (POWER)	3B

Date: Monday, December 12, 2005 Sheet 4 of 32

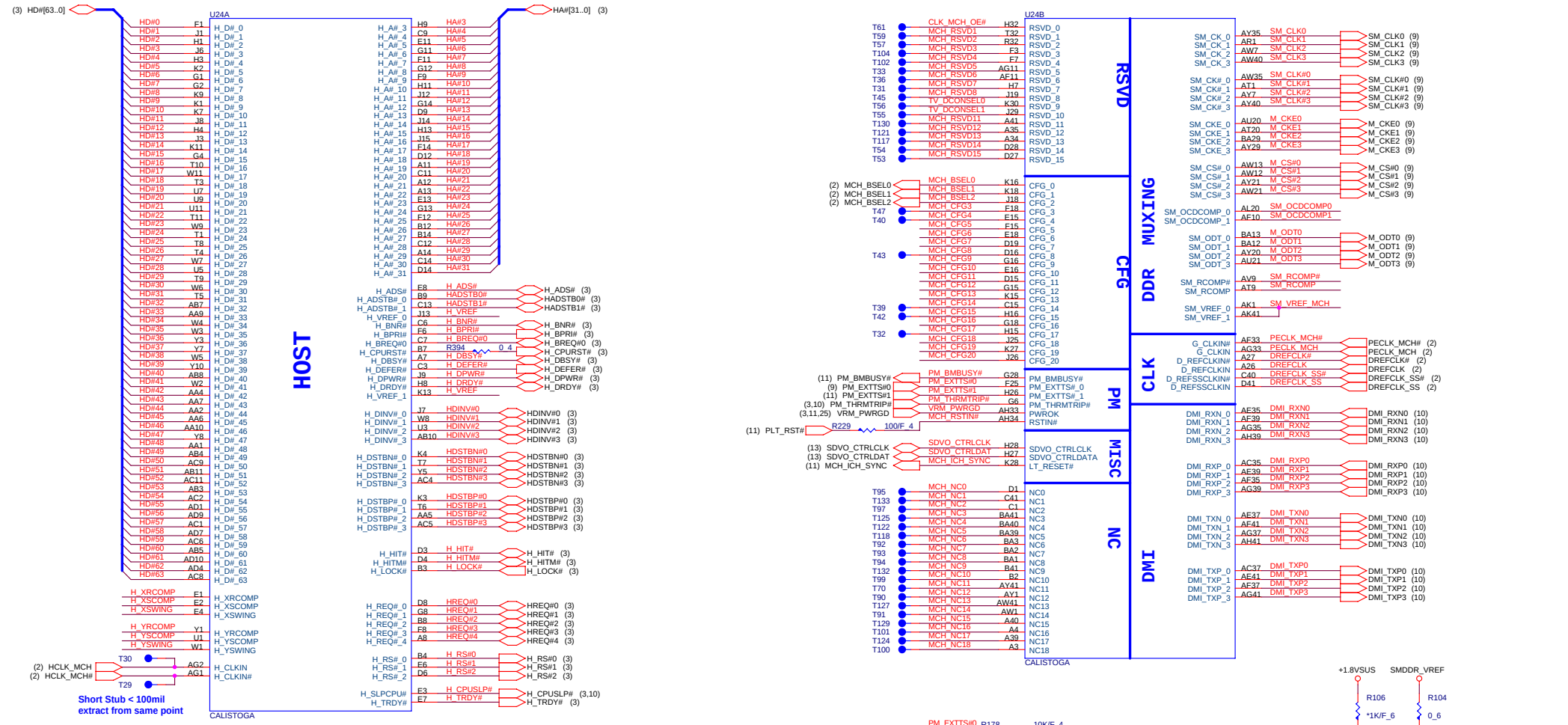

GMCH STRAP PIN

1. MCH_CFG5 : Low=DMIx2, High=DMIx4.
2. MCH_CFG6 DDR : Low=Moby Dick, High=Calistoga (Default).
3. MCH_CFG7 CPU Strap : Low=Rsvd, High=Mobile CPU.
4. MCH_CFG9 PCIE GFX Lane : Low=Reverse, High=Normal.
5. MCH_CFG10 Host PLL VCC : Low=Rsvd, High=Mobility.
6. MCH_CFG11 PSB 4x Enable : Low=Rsvd, High=Calistoga.
7. MCH_CFG16 FSB Dynamic ODT : Low=Disabled, High=Enabled.
8. MCH_CFG18 VCC Select : LOW=1.05V, High=1.5V.
9. MCH_CFG19 DMI Lane Reversal : Low=Normal, High=Reversed.
10. MCH_CFG20 PCIE Backward interpoerability mode : Low= only SDVO or PCIE x1 is operational (defaults) , High=SDVO and PCIE x1 are operation simultaneously via the PEG port.

PROJECT :BD1
Quanta Computer Inc.

Size	Document Number	Rev
	GMCH (HOST, DMI)	3B

Date: Monday, December 12, 2005 Sheet 5 of 32

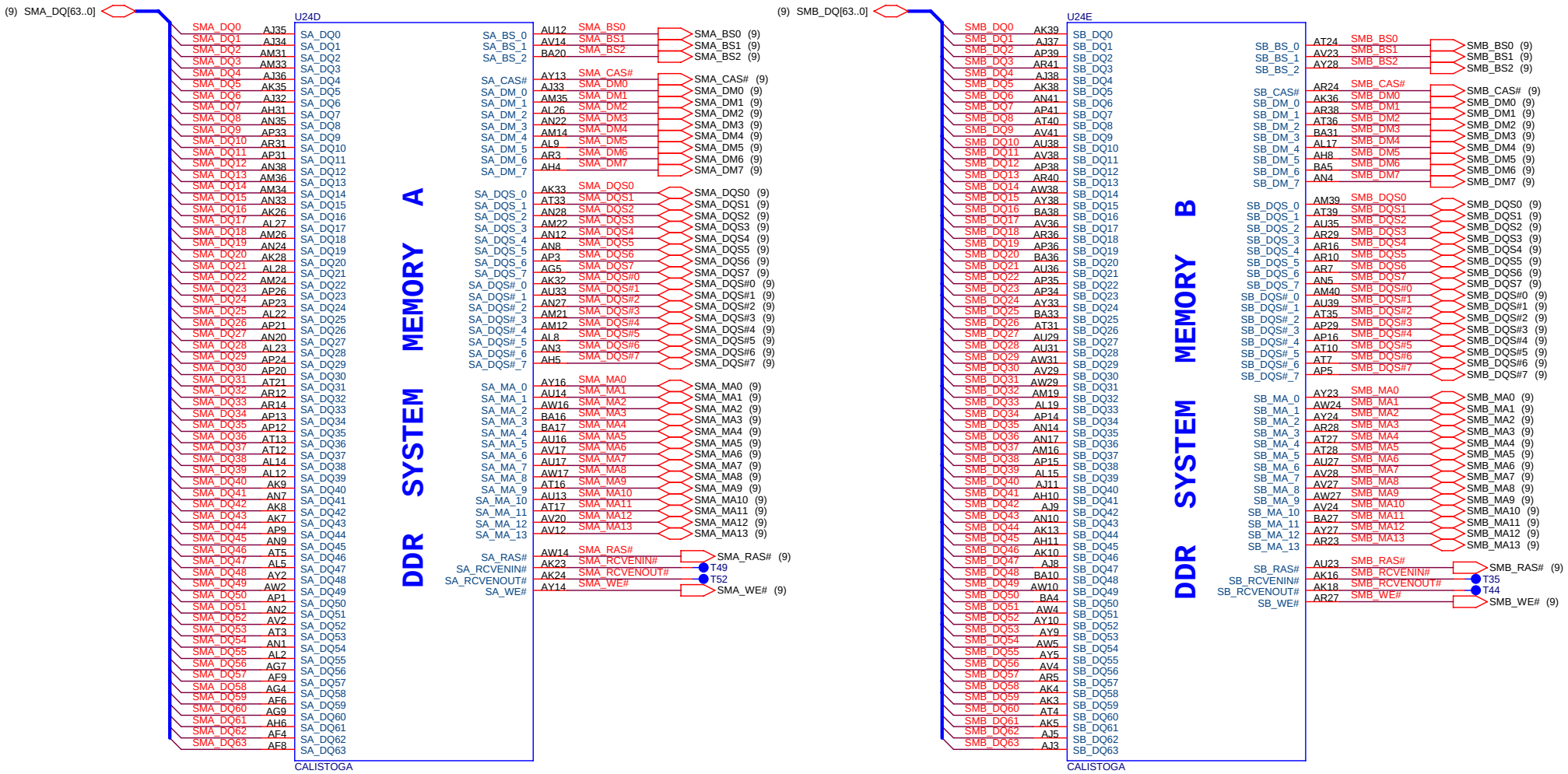

PROJECT :BD1

Quanta Computer Inc.

Size	Document Number	Rev
	GMCH (MEMORY)	3B

Date: Monday, December 12, 2005 Sheet 6 of 32

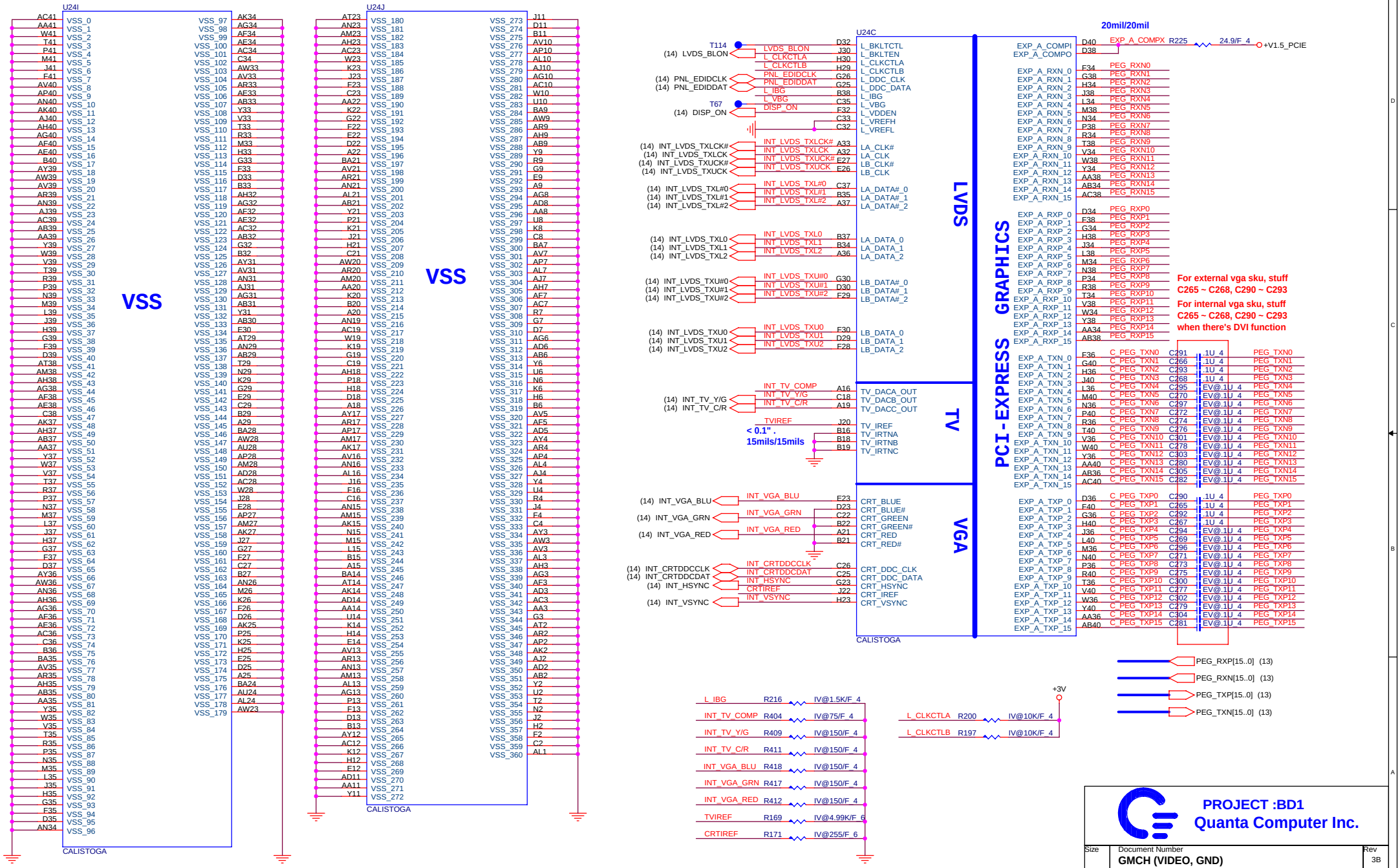

PROJECT :BD1

Quanta Computer Inc.

Size	Document Number	Rev
	GMCH (VIDEO, GND)	3B

Date: Monday, December 12, 2005 Sheet 7 of 32

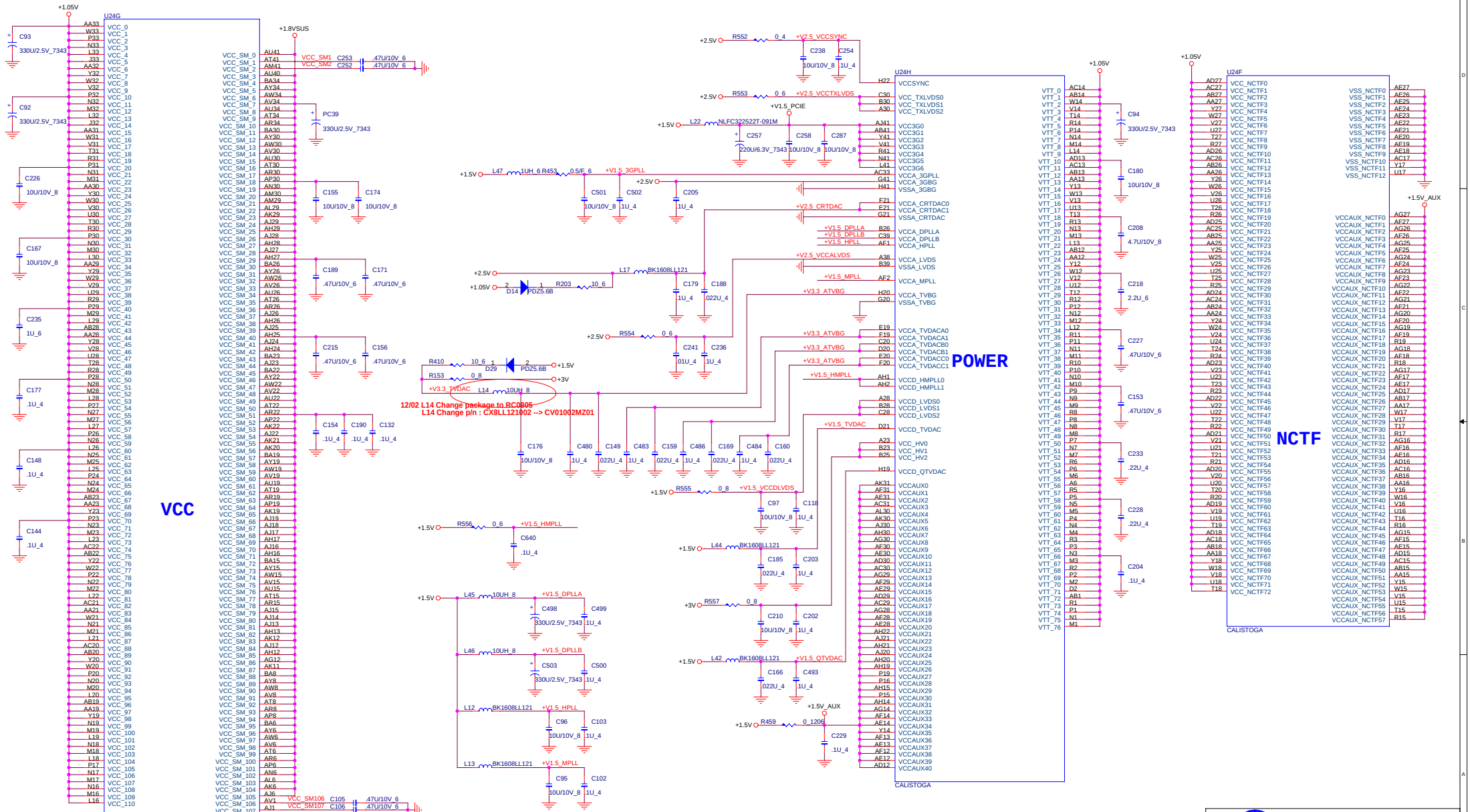

PROJECT :BD1
Quanta Computer Inc.

Size	Document Number	Rev
	GMCH (POWER)	3B
Date: Monday, December 12, 2005	Sheet 8 of 32	

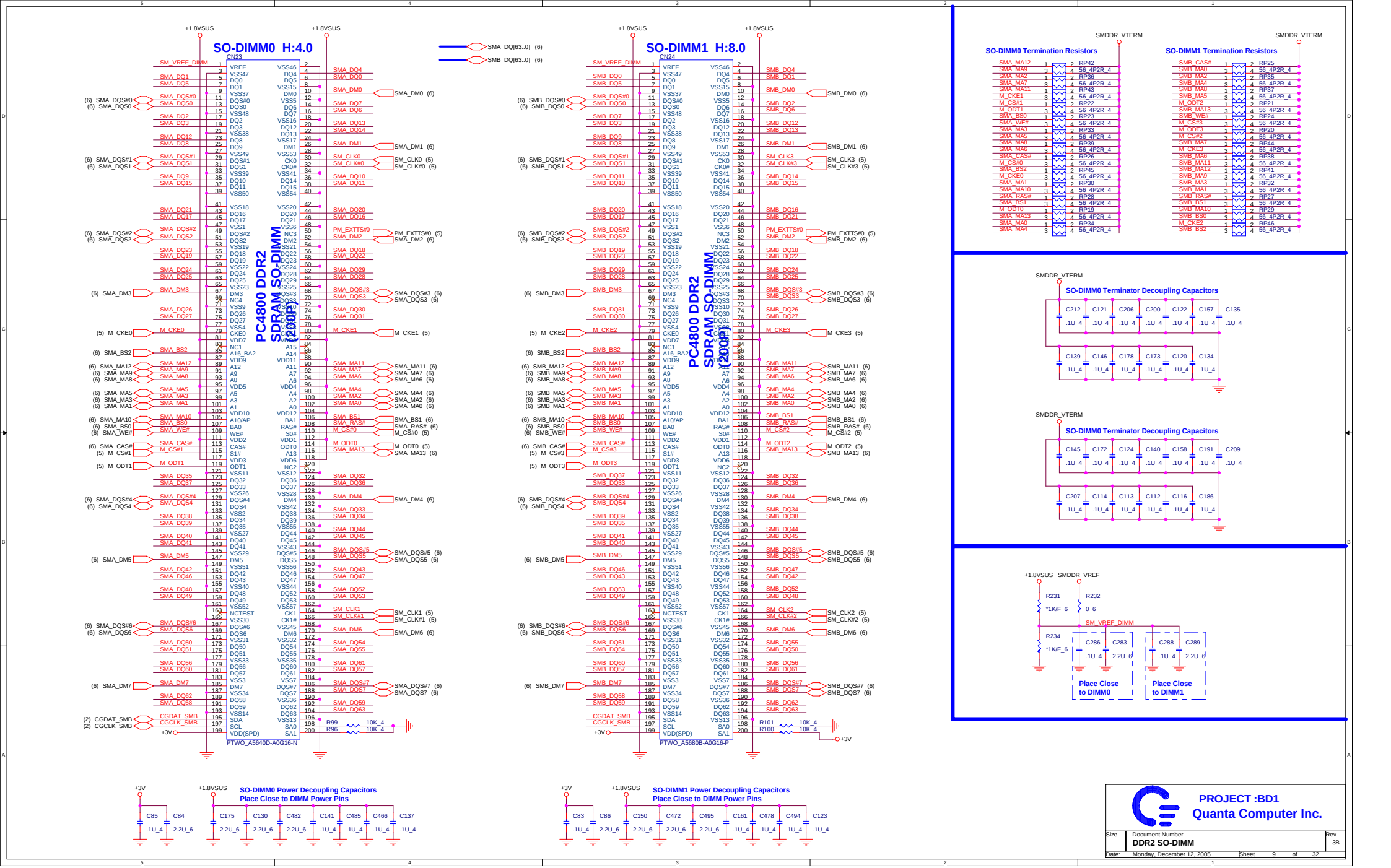

PROJECT :BD1

Quanta Computer Inc.

Size	Document Number	Rev
	DDR2 SO-DIMM	3B

Date: Monday, December 12, 2005 Sheet 9 of 32

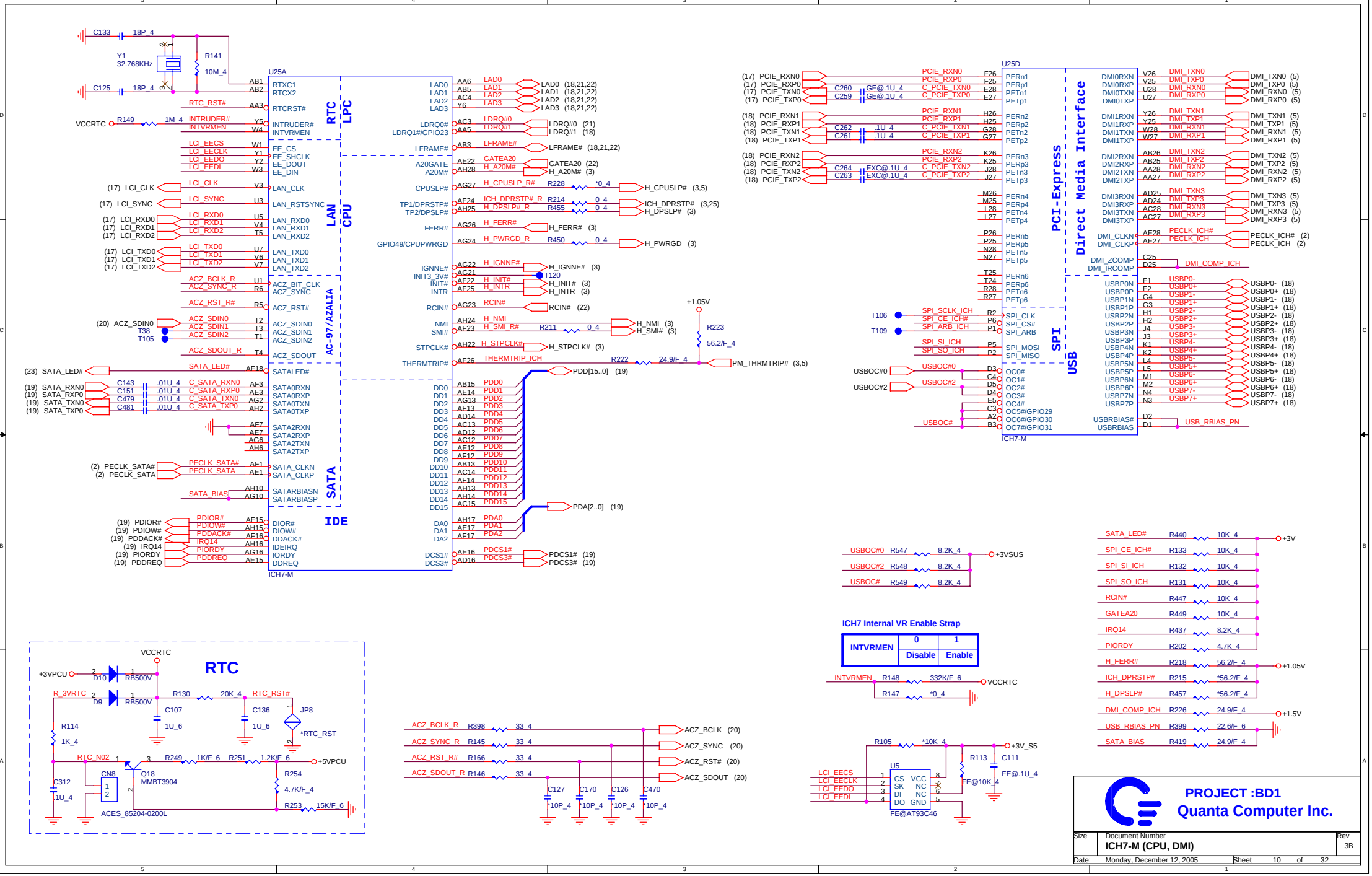
U25A
RTC
LPC
LAN
CPU
AC-97/AZALIA
SATA
IDE
ICH7-M
U25D
PCI-Express
Direct Media Interface
SPI
USB
ICH7-M
RTC
VCCRTC
+3VPCU
D10 RB500V
D9 RB500V
R_3VRTC
R130 20K_4
RTC_RST#
C107 1U_6
C136 1U_6
JP8
*RTC_RST
R114 1K_4
RTC_N02
R249 1K/F_6
R251 1.2K/F_6
+5VPCU
Q18 MMBT3904
R254 4.7K/F_4
R253 15K/F_6
C312 1U_4
CN8
ACES_85204-0200L
ACZ_BCLK_R R398 33_4
ACZ_SYNC_R R145 33_4
ACZ_RST_R# R166 33_4
ACZ_SDOUT_R R146 33_4
ACZ_BCLK (20)
ACZ_SYNC (20)
ACZ_RST# (20)
ACZ_SDOUT (20)
C127 *10P_4
C170 *10P_4
C126 *10P_4
C470 *10P_4
USBOC#0 R547 8.2K_4 +3VSUS
USBOC#2 R548 8.2K_4
USBOC# R549 8.2K_4
ICH7 Internal VR Enable Strap
INTVRMEN 0 Disable 1 Enable
INTVRMEN R148 332K/F_6 VCCRTC
R147 *0_4
R105 *10K_4 +3V_S5
R113 FE@10K_4
C111 FE@1U_4
U5 FE@AT93C46
LCI_EECS
LCI_EECLK
LCI_EEDO
LCI_EEDI
SATA_LED# R440 10K_4 +3V
SPI_CE_ICH# R133 10K_4
SPI_SI_ICH R132 10K_4
SPI_SO_ICH R131 10K_4
RCIN# R447 10K_4
GATEA20 R449 10K_4
IRQ14 R437 8.2K_4
PIORDY R202 4.7K_4
H_FERR# R218 56.2/F_4 +1.05V
ICH_DPRSTP# R215 *56.2/F_4
H_DPSLP# R457 *56.2/F_4
DMI_COMP_ICH R226 24.9/F_4 +1.5V
USB_RBIAS_PN R399 22.6/F_6
SATA_BIAS R419 24.9/F_4
PROJECT :BD1
Quanta Computer Inc.
Size
Document Number
ICH7-M (CPU, DMI)
Rev 3B
Date: Monday, December 12, 2005
Sheet 10 of 32

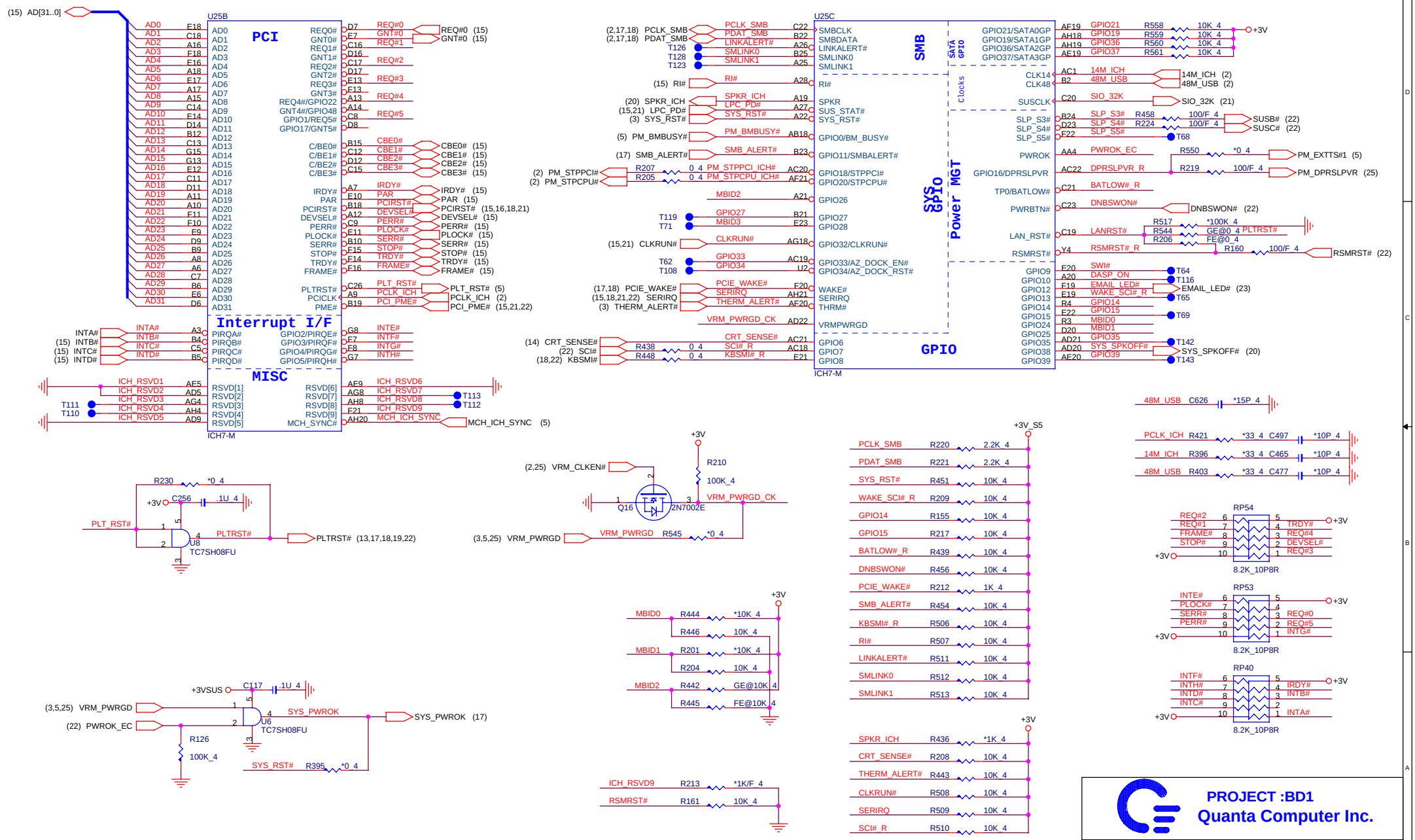
U25B
PCI
Interrupt I/F
MISC
ICH7-M
U25C
SMB
GPIO
SYS MGT
Power MGT
Clocks
SATA GPIO
ICH7-M
(15) AD[31..0]
REQ#0 (15)
GNT#0 (15)
CBE0# (15)
CBE1# (15)
CBE2# (15)
CBE3# (15)
IRDY# (15)
PAR (15)
PCIRST# (15,16,18,21)
DEVSEL# (15)
PERR# (15)
PLOCK# (15)
SERR# (15)
STOP# (15)
TRDY# (15)
FRAME# (15)
PLT_RST# (5)
PCLK_ICH (2)
PCI_PME# (15,21,22)
MCH_ICH_SYNC (5)
(2,17,18) PCLK_SMB
(2,17,18) PDAT_SMB
(15) RI#
(20) SPKR_ICH
(15,21) LPC_PD#
(3) SYS_RST#
(5) PM_BMBUSY#
(17) SMB_ALERT#
(2) PM_STPPCI#
(2) PM_STPCPU#
(15,21) CLKRUN#
(17,18) PCIE_WAKE#
(15,18,21,22) SERIRQ
(3) THERM_ALERT#
(14) CRT_SENSE#
(22) SCI#
(18,22) KBSMI#
(3,5,25) VRM_PWRGD
(22) PWROK_EC
SUSB# (22)
SUSC# (22)
PM_EXTTS#1 (5)
PM_DPRSLPVR (25)
DNBSWON# (22)
RSMRST# (22)
EMAIL_LED# (23)
SYS_SPKOFF# (20)
SYS_PWROK (17)
PLTRST# (13,17,18,19,22)
(2,25) VRM_CLKEN#
14M_ICH (2)
48M_USB (2)
SIO_32K (21)
+3V
+3V_S5
+3VSUS
PROJECT :BD1
Quanta Computer Inc.
Size
Document Number
ICH7-M (PCI, GPIO)
Rev
3B
Date: Monday, December 12, 2005
Sheet 11 of 32

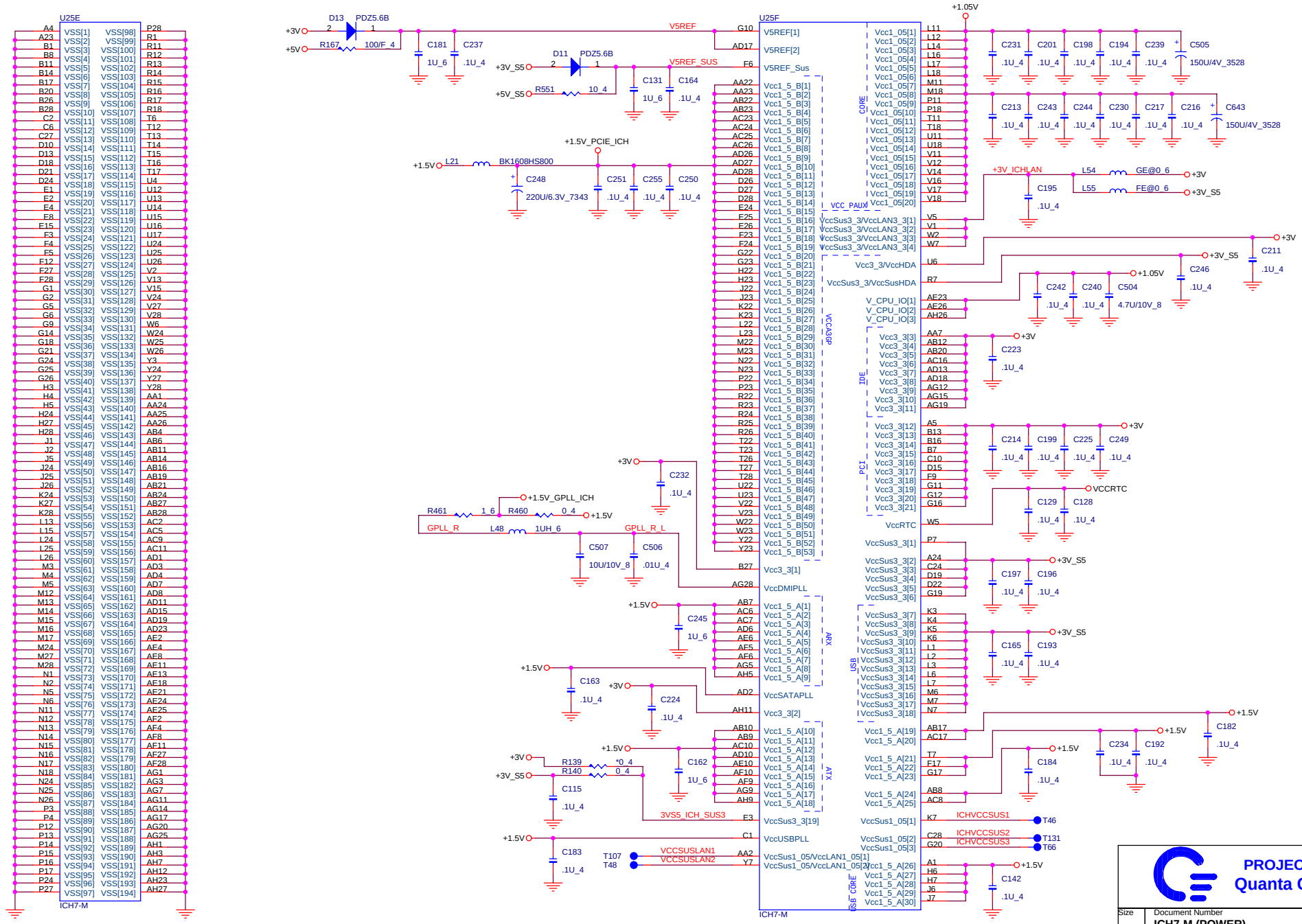
U25E
ICH7-M
U25F
ICH7-M
D13 PDZ5.6B
D11 PDZ5.6B
V5REF
V5REF_SUS
+1.5V_PCIE_ICH
+1.5V_GPLL_ICH
GPLL_R
GPLL_R_L
3VS5_ICH_SUS3
VCCSUSLAN1
VCCSUSLAN2
+3V_ICHLAN
ICHVCCSUS1
ICHVCCSUS2
ICHVCCSUS3
+1.05V
VCCRTC
PROJECT :BD1
Quanta Computer Inc.
Size
Document Number
ICH7-M (POWER)
Rev
3B
Date: Monday, December 12, 2005
Sheet 12 of 32

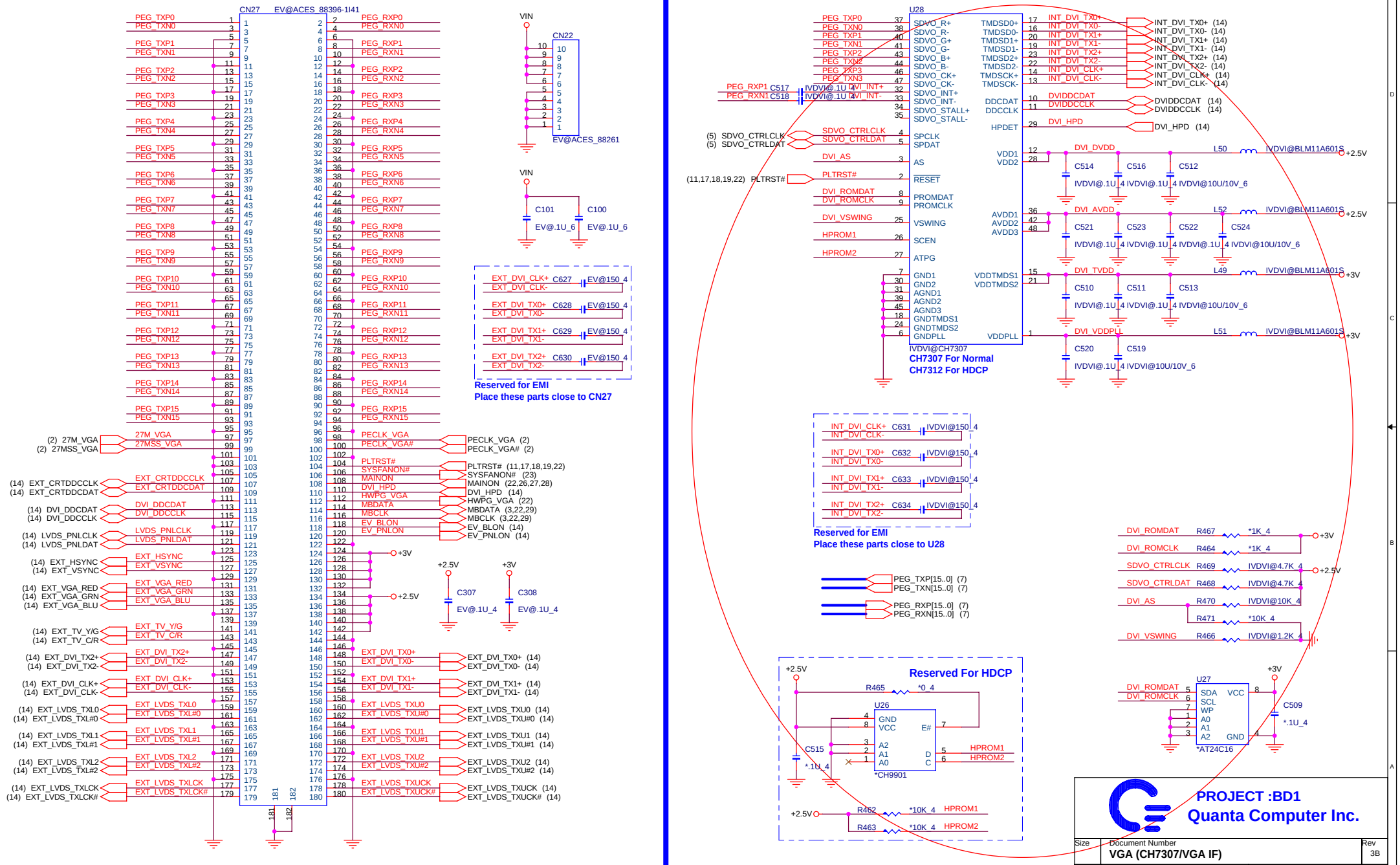
12/12 Unstuff DVI function for UMA Sku
CN27 EV@ACES_88396-1I41
CN22
EV@ACES_88261
U28
IVDVI@CH7307
CH7307 For Normal
CH7312 For HDCP
Reserved for EMI
Place these parts close to CN27
Reserved for EMI
Place these parts close to U28
Reserved For HDCP
U26
*CH9901
U27
*AT24C16
PROJECT :BD1
Quanta Computer Inc.
Size
Document Number
VGA (CH7307/VGA IF)
Rev
3B
Date: Monday, December 12, 2005
Sheet 13 of 32

DVI

12/12 Unstuff DVI function for UMA Sku

DVI CONNECTOR (DVI-D)

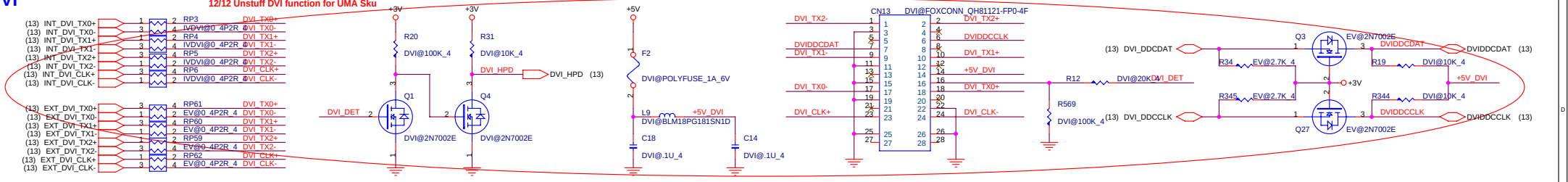

S-VIDEO

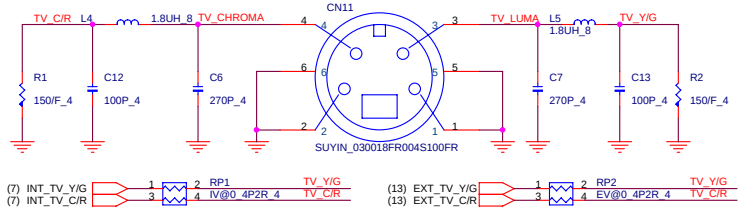

LVDS

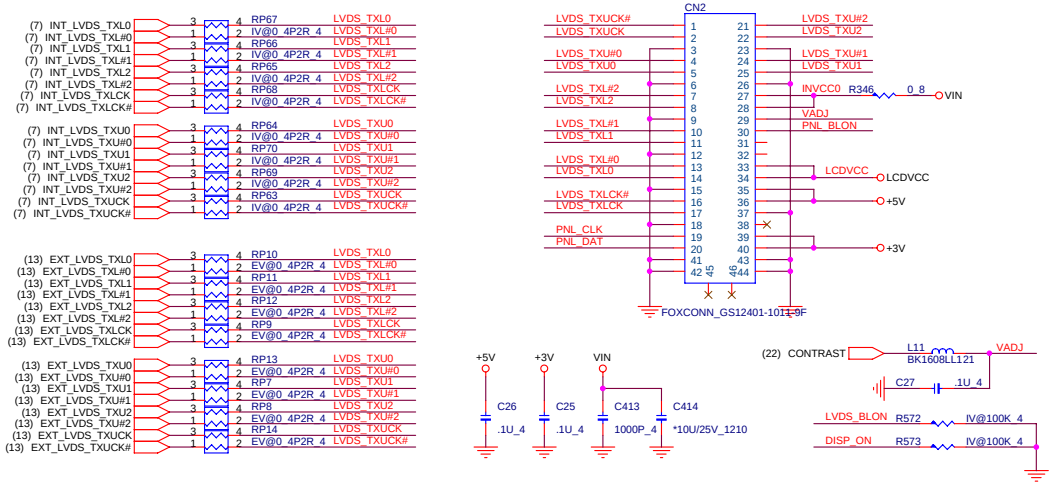

CRT

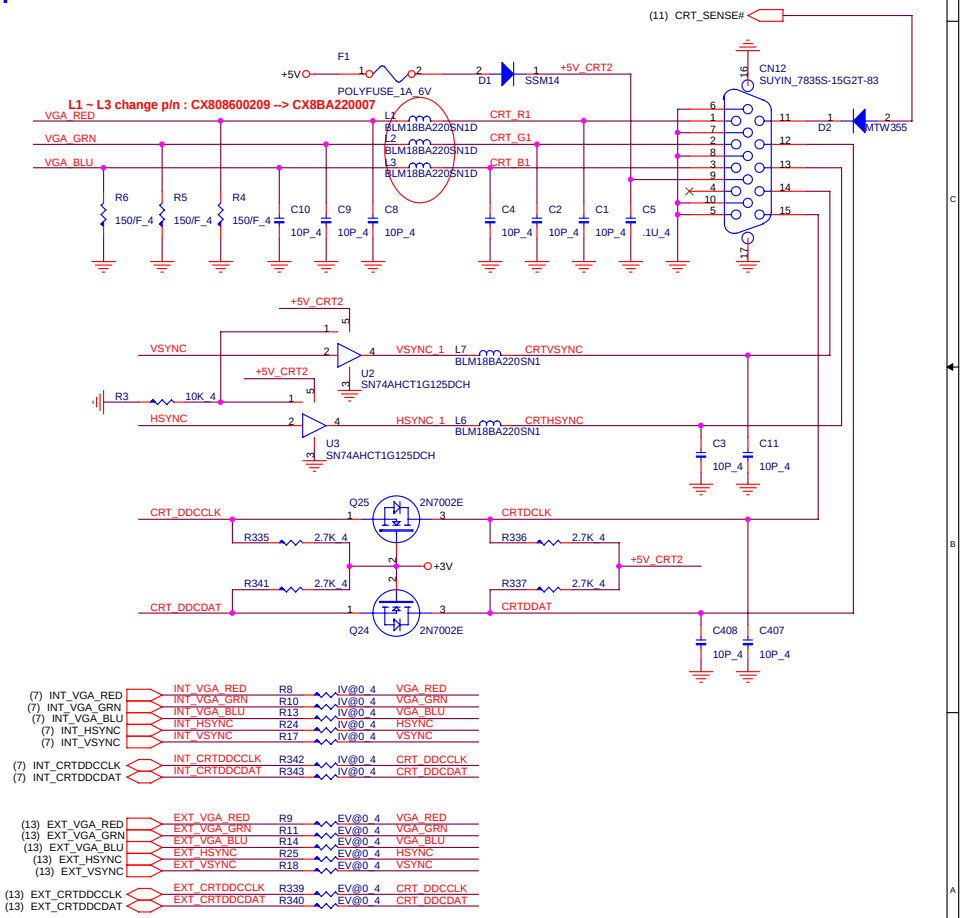

PROJECT :BD1
Quanta Computer Inc.

Size	Document Number	Rev
	VGA (LVDS/DVI/CRT/TV)	3B

Date: Monday, December 12, 2005 Sheet 14 of 32

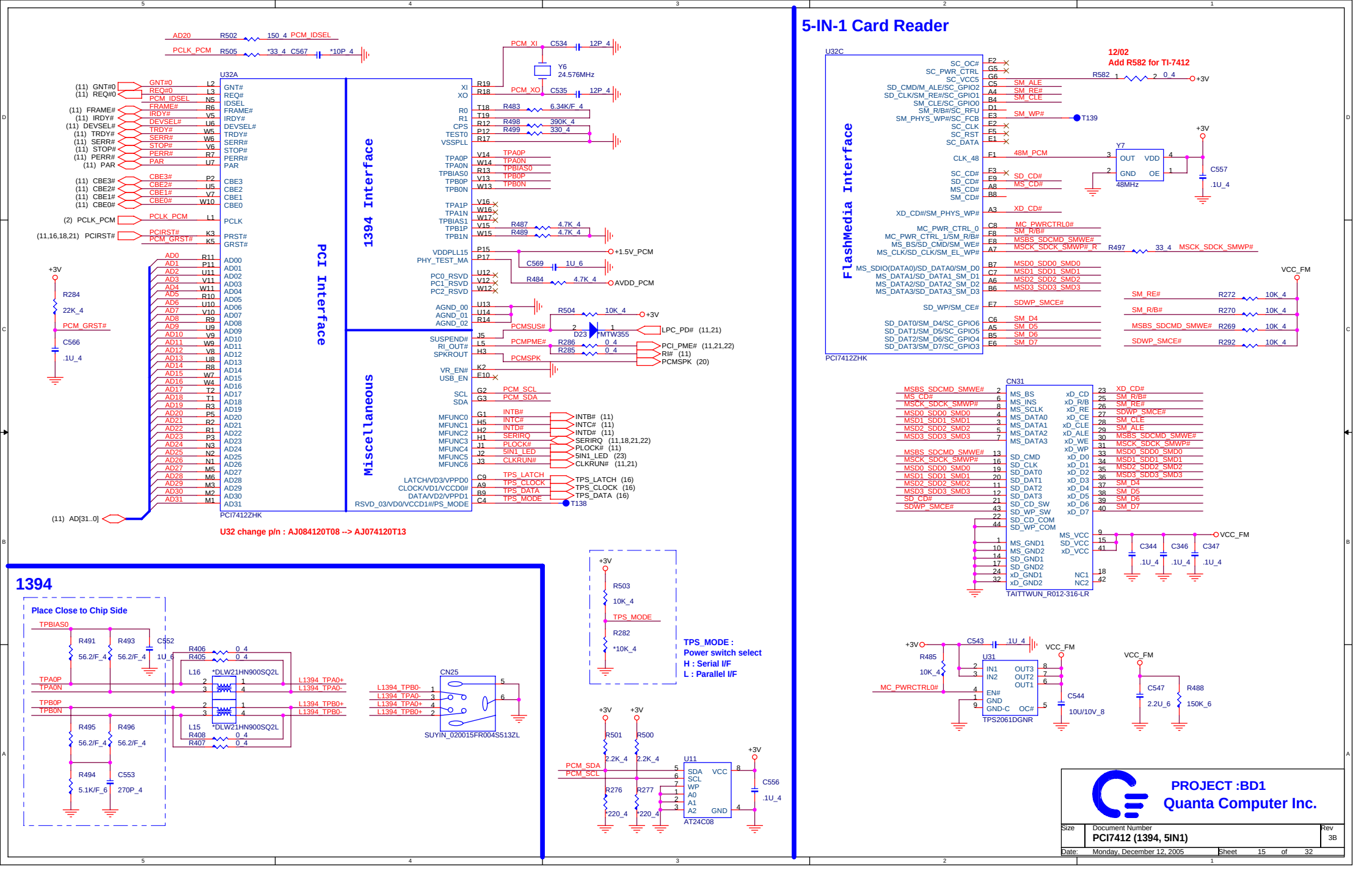
PCI Interface
1394 Interface
Miscellaneous
U32A
PCI7412ZHK
U32 change p/n : AJ084120T08 --> AJ074120T13
5-IN-1 Card Reader
FlashMedia Interface
U32C
PCI7412ZHK
12/02
Add R582 for TI-7412
CN31
TAITTWUN_R012-316-LR
U31
TPS2061DGNR
U11
AT24C08
CN25
SUYIN_020015FR004S513ZL
1394
Place Close to Chip Side
TPS_MODE :
Power switch select
H : Serial I/F
L : Parallel I/F
PROJECT :BD1
Quanta Computer Inc.
Size
Document Number
PCI7412 (1394, 5IN1)
Rev
3B
Date: Monday, December 12, 2005
Sheet 15 of 32

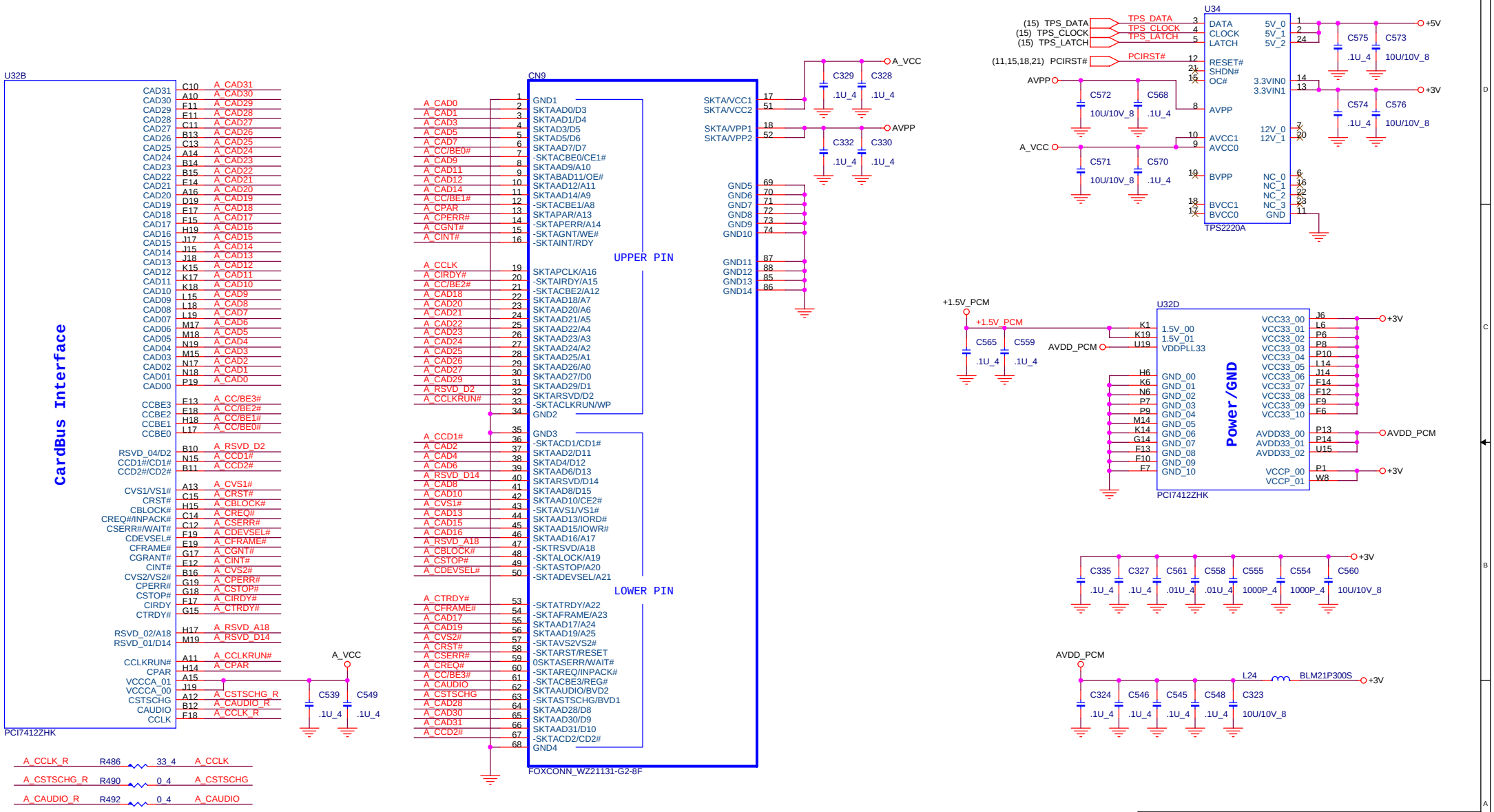

PROJECT :BD1
Quanta Computer Inc.

Size	Document Number	Rev
	PCI7412 (PCMCIA)	3B

Date: Monday, December 12, 2005 Sheet 16 of 32

POWER

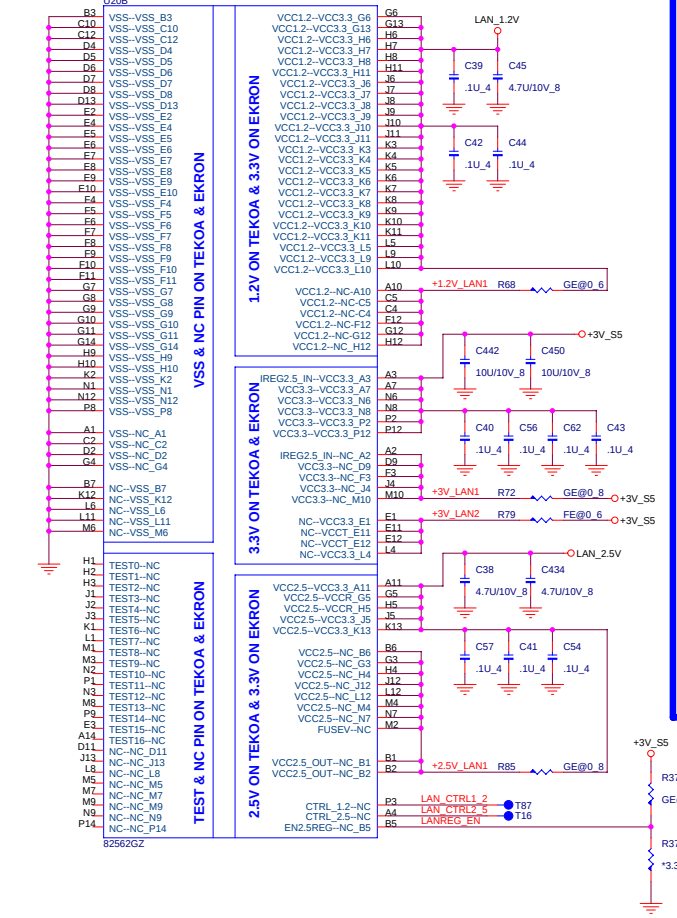

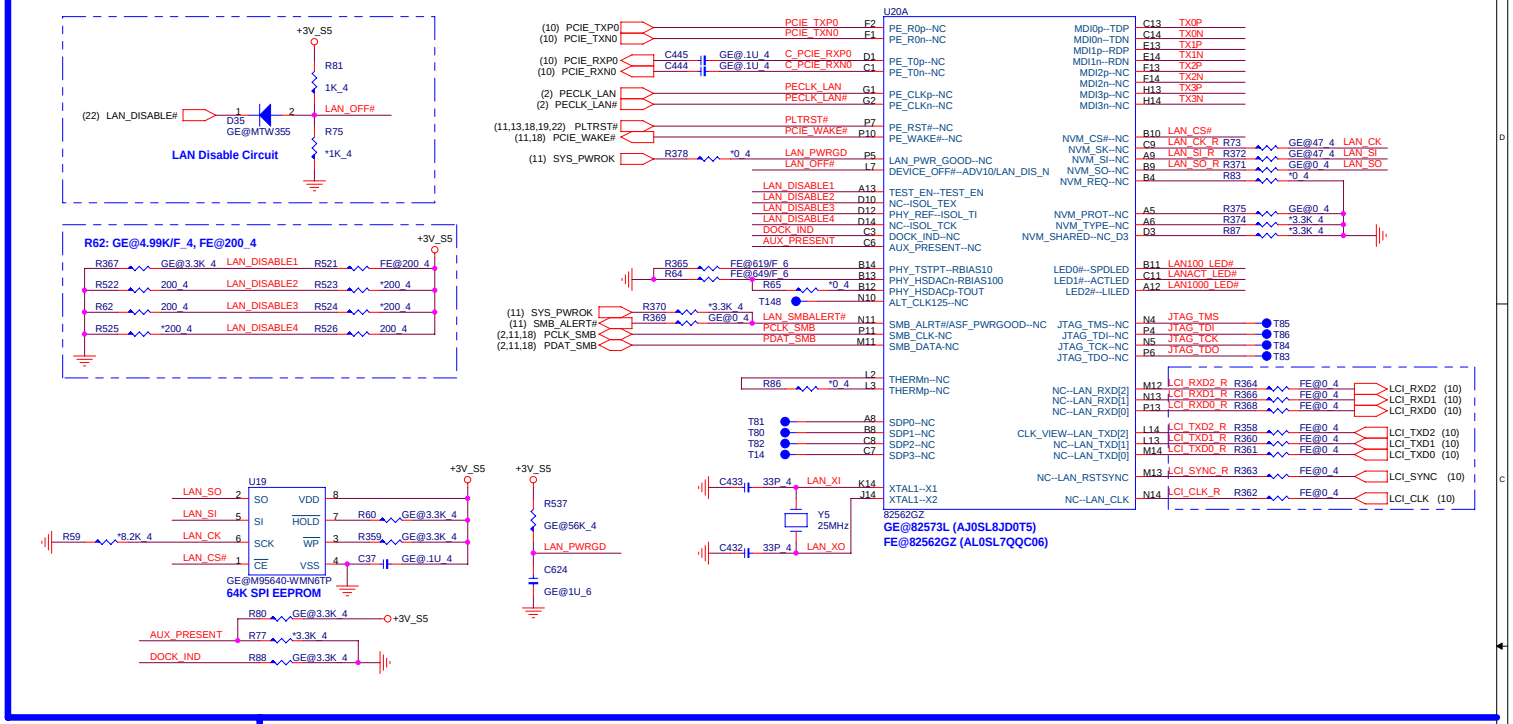

TRANSFORMER & RJ45

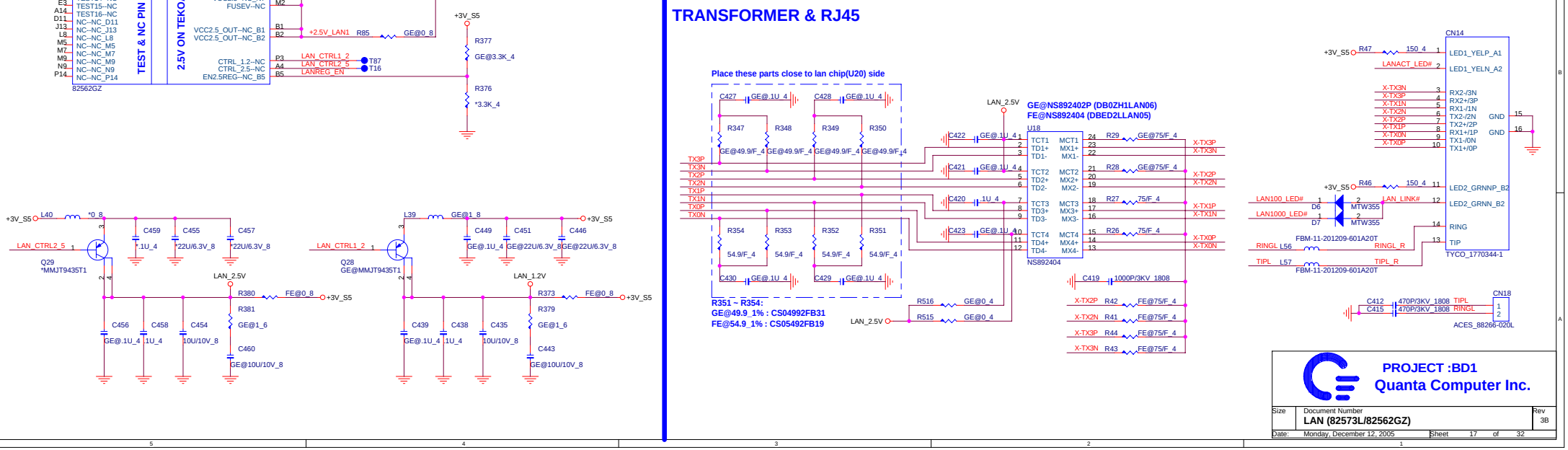

PROJECT :BD1
Quanta Computer Inc.

Size	Document Number	Rev
	LAN (82573L/82562GZ)	3B

Date: Monday, December 12, 2005 Sheet 17 of 32

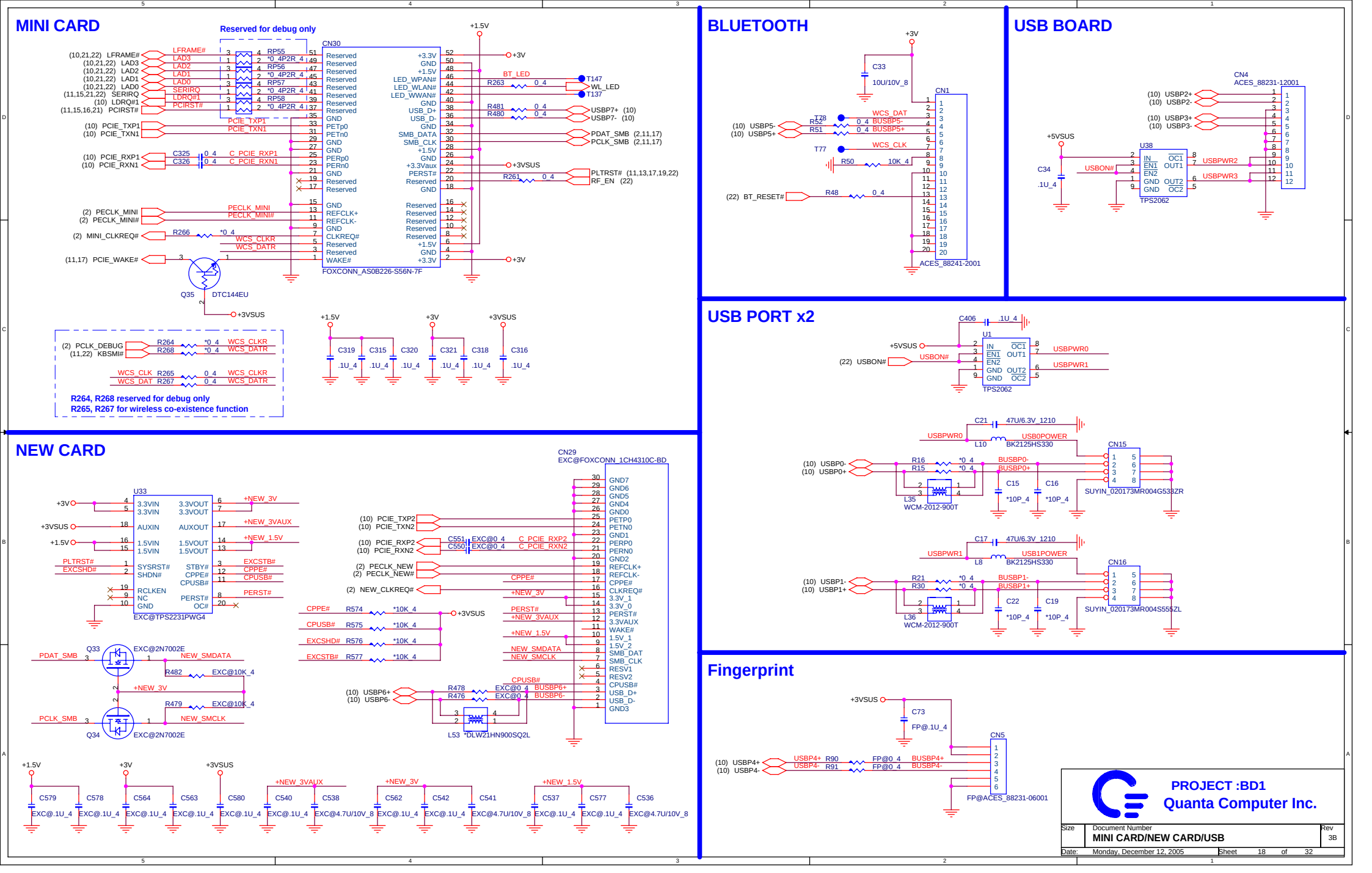
MINI CARD
Reserved for debug only
CN30
FOXCONN_AS0B226-S56N-7F
Q35 DTC144EU
R264, R268 reserved for debug only
R265, R267 for wireless co-existence function
BLUETOOTH
CN1
ACES_88241-2001
USB BOARD
CN4
ACES_88231-12001
U38
TPS2062
USB PORT x2
U1
TPS2062
CN15
SUYIN_020173MR004G538ZR
CN16
SUYIN_020173MR004S555ZL
NEW CARD
U33
EXC@TPS2231PWG4
CN29
EXC@FOXCONN_1CH4310C-BD
Q33 EXC@2N7002E
Q34 EXC@2N7002E
L53 *DLW21HN900SQ2L
Fingerprint
CN5
FP@ACES_88231-06001
PROJECT :BD1
Quanta Computer Inc.
Size
Document Number
MINI CARD/NEW CARD/USB
Rev
3B
Date: Monday, December 12, 2005
Sheet 18 of 32

HDD (SATA)

CN19 change p/n : DFHS22FR421 --> DFHS22FR642

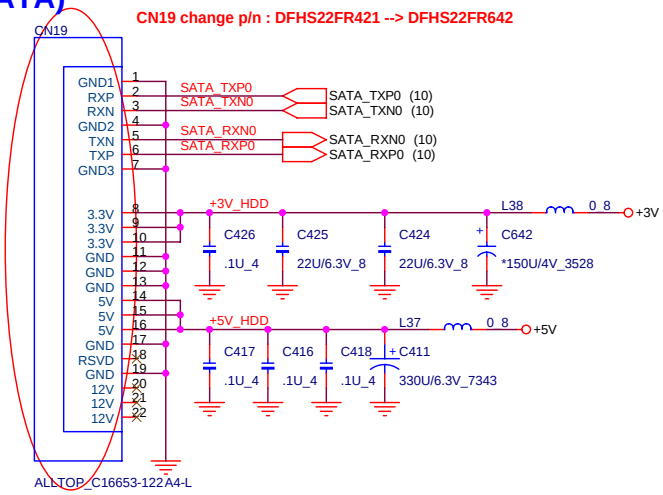

ODD (PATA)

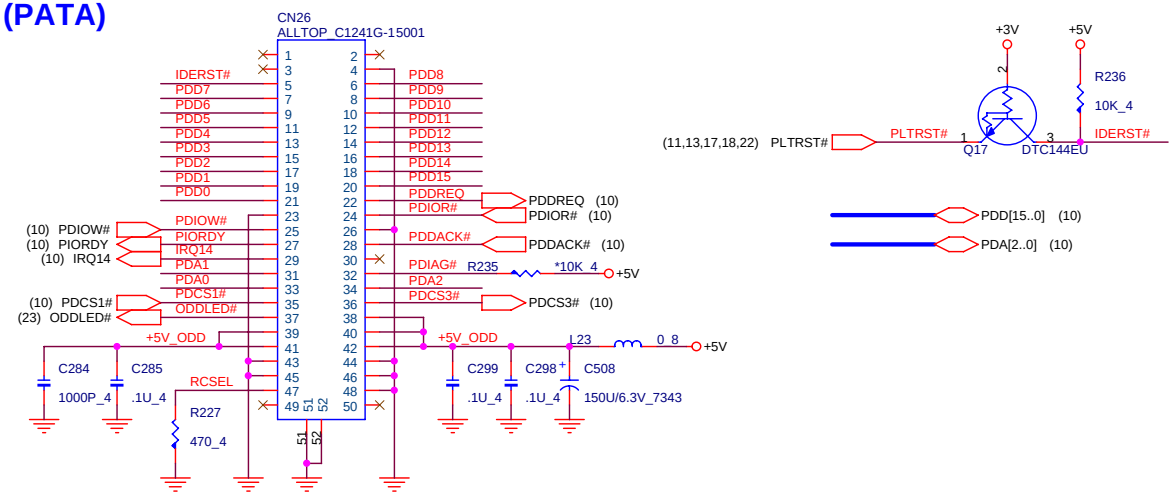

12/12 Unstuff PAD6 and stuff
PAD1 for modem cable clip

SCREW HOLE

CPU

HOLE7 MBBD1009016
HOLE8 MBBD1009016
HOLE11 MBBD1009016

VGA BOARD

HOLE14 EV@MBBD1002011
HOLE24 EV@MBBD1002011
HOLE33 EV@MBBD1002011

HOLE4 *H-C276D110P2
HOLE3 *H-C276D110P2
HOLE6 *H-C276D110P2
HOLE5 *H-C276D110P2
HOLE1 *H-C276D110P2

HOLE9 *H-C276D110P2
HOLE10 *H-C276D110P2
HOLE12 *H-C276D110P2
HOLE17 *H-C276D110P2
HOLE22 *H-C283D110P2

HOLE23 *H-C276D110P2
HOLE25 *H-C276D110P2
HOLE26 *H-C276D110P2
HOLE31 *H-C276D110P2
HOLE30 *H-C276D110P2

MINI CARD

HOLE20 MBBD1003018
HOLE21 MBBD1003018

MODEM

HOLE28 MBBD1011011
HOLE27 MBBD1011011

AUDIO BOARD

HOLE29 MBBD1001015

NB

HOLE15 MBBD1009016
HOLE18 MBBD1009016

EMI

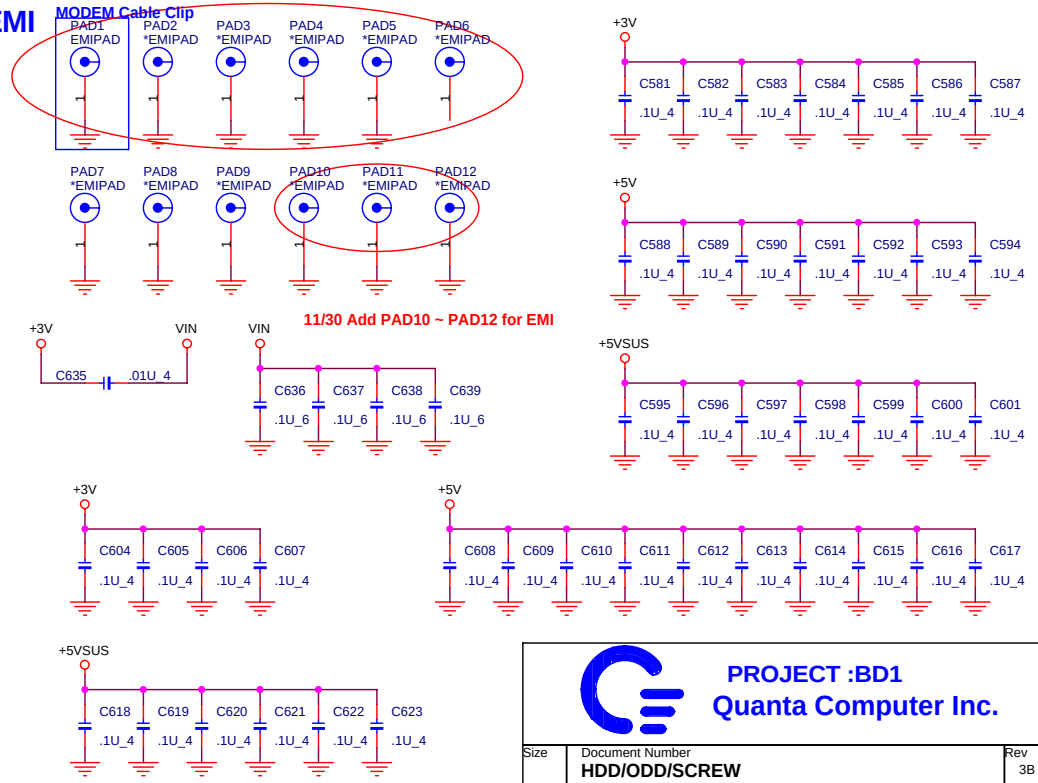

11/30 Add PAD10 ~ PAD12 for EMI

PROJECT :BD1
Quanta Computer Inc.

Size	Document Number	Rev
	HDD/ODD/SCREW	3B

Date: Monday, December 12, 2005 Sheet 19 of 32

CODEC

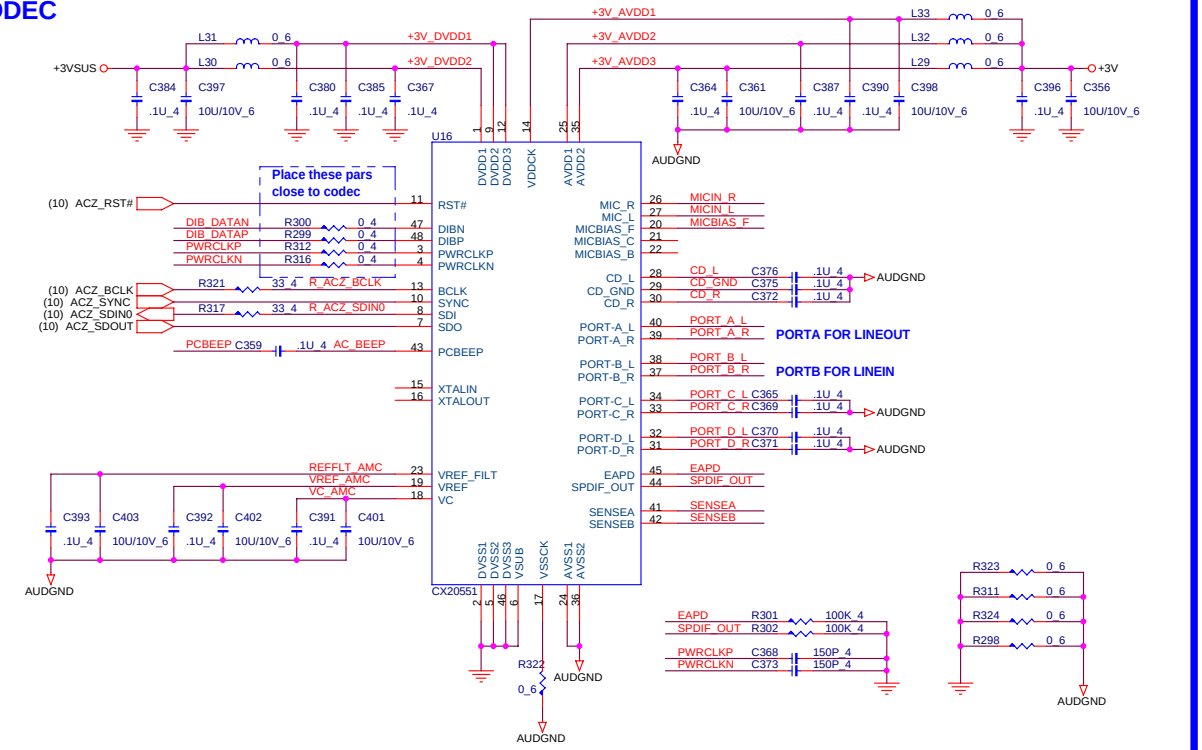

AMP

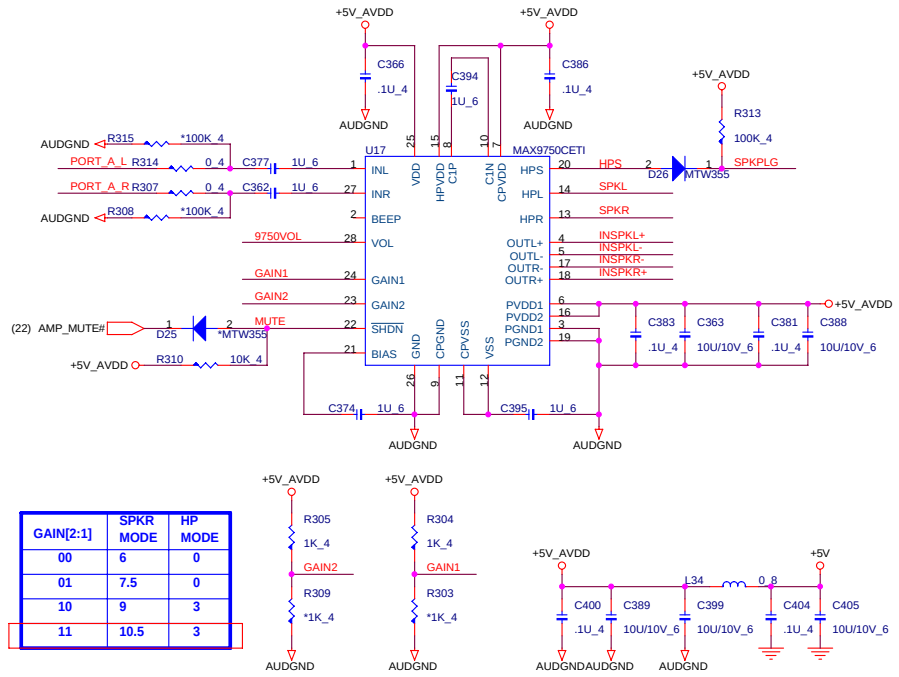

GAIN[2:1]	SPKR MODE	HP MODE
00	6	0
01	7.5	0
10	9	3
11	10.5	3

AUDIO/B

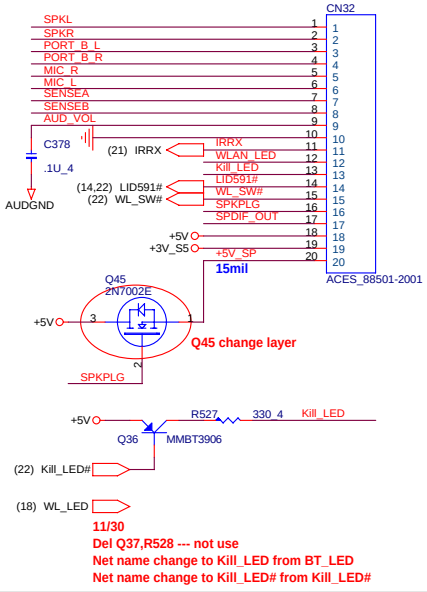

MIC IN

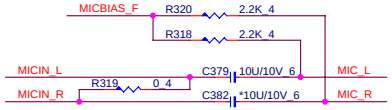

SPEAKER

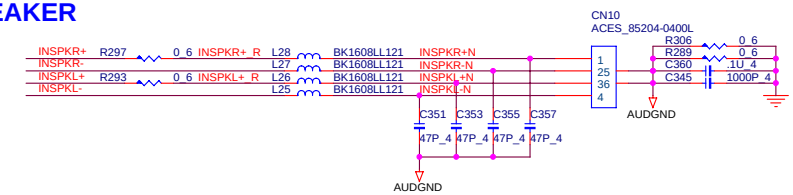

MODEM/B

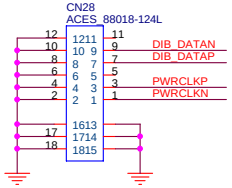

PC BEEP

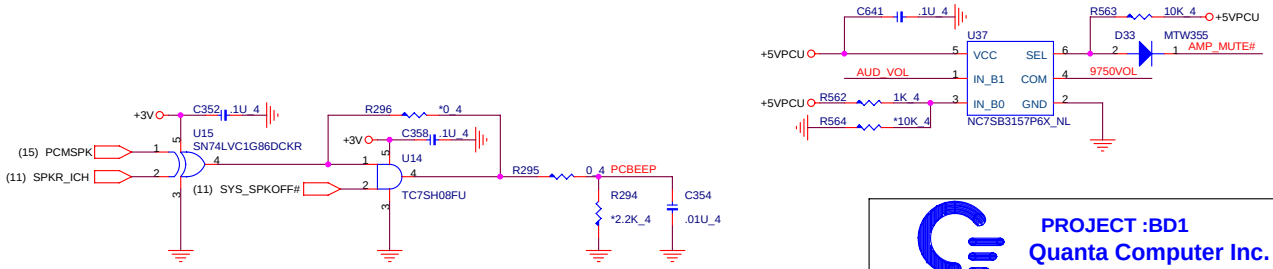

PROJECT :BD1
Quanta Computer Inc.

Size	Document Number	Rev
	AUDIO (CODEC/AMP)	3B

Date: Monday, December 12, 2005 Sheet 20 of 32

SIO

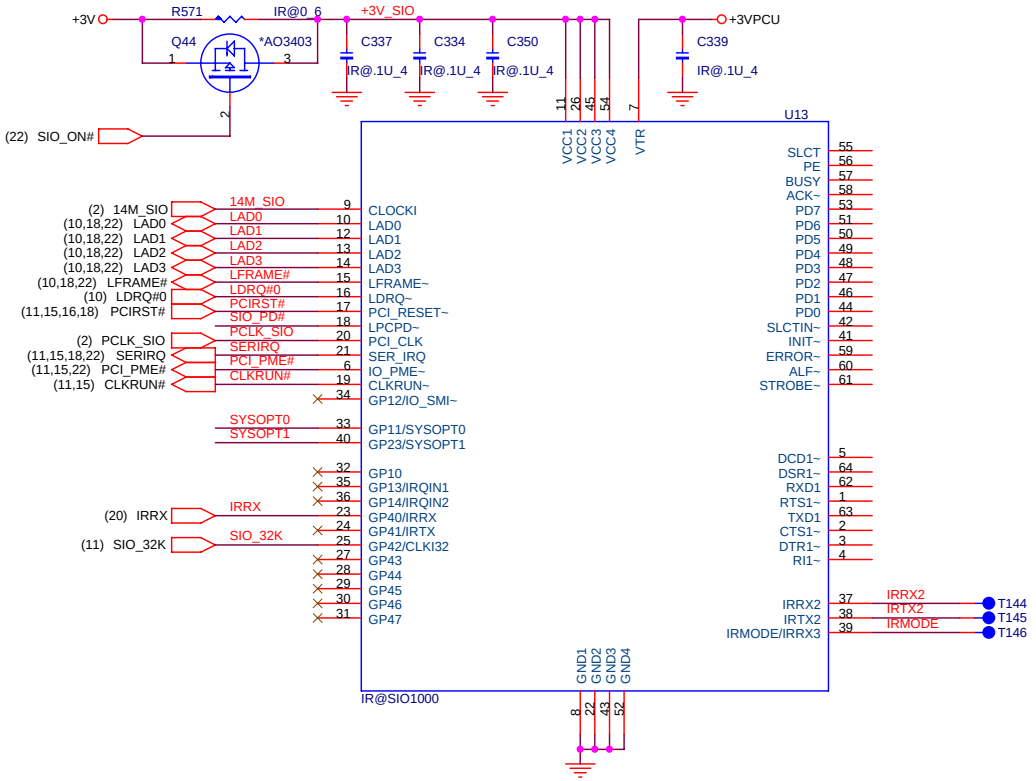

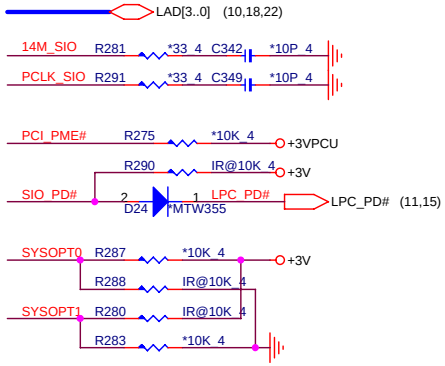

SYSOPT1	SYSOPT0	DEFAULT CONFIGURATION PORT BASE ADDRESS
0	0	0X002E
0	1	0X004E
1	0	0X162E
1	1	0X164E

TPM 1.2

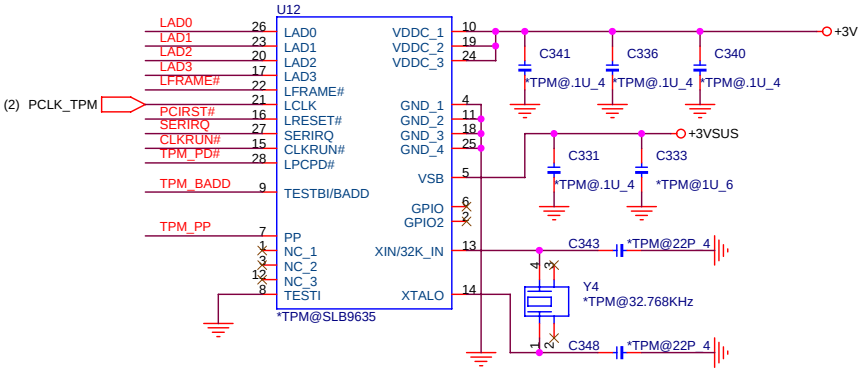

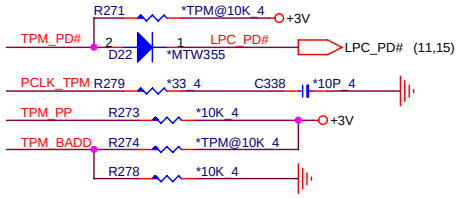

TPM_PP	HI : ACCESS LOW : NORMAL (Internal PD)
TPM_BADD	HI : 4E/4F h LOW : 2E / 2F h

PROJECT :BD1

Quanta Computer Inc.

Size	Document Number	Rev
	SIO1000/TPM	3B

Date: Monday, December 12, 2005 Sheet 21 of 32

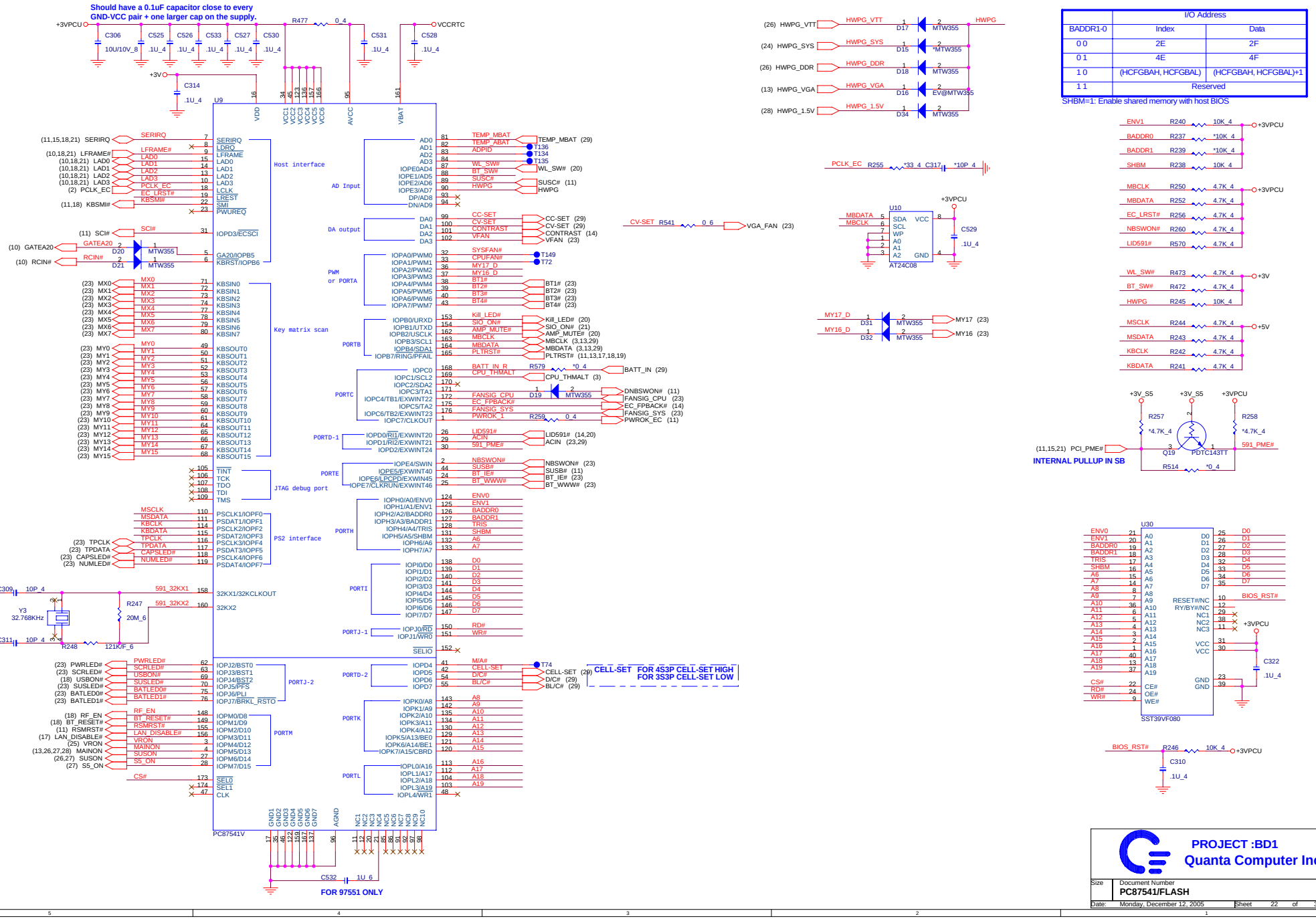

	I/O Address	
BADDR1-0	Index	Data
0 0	2E	2F
0 1	4E	4F
1 0	(HCFGBAH, HCFGBAL)	(HCFGBAH, HCFGBAL)+1
1 1	Reserved	

SHBM=1: Enable shared memory with host BIOS

PROJECT :BD1
Quanta Computer Inc.

Size	Document Number	Rev
	PC87541/FLASH	3B

Date: Monday, December 12, 2005 Sheet 22 of 32

INT K/B

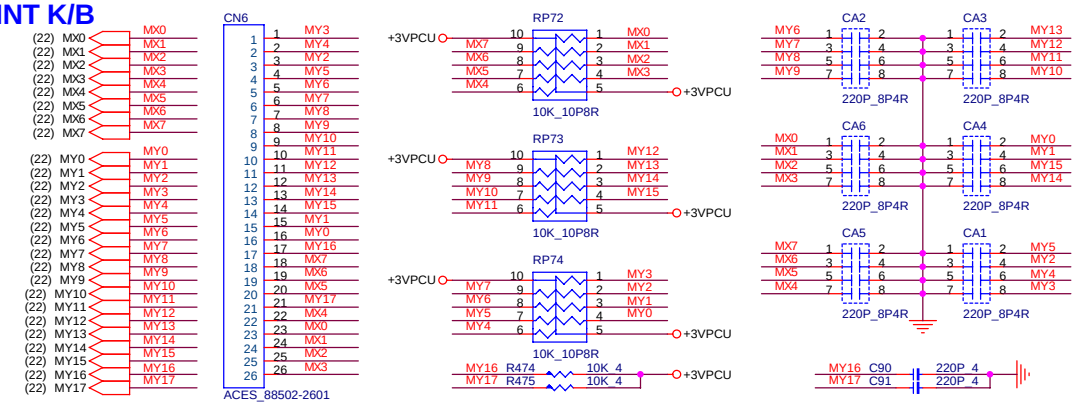

TP

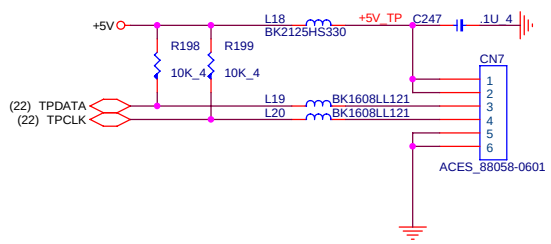

SPEAKER LED

12/12 R520, R578 change value to 12ohm 0402

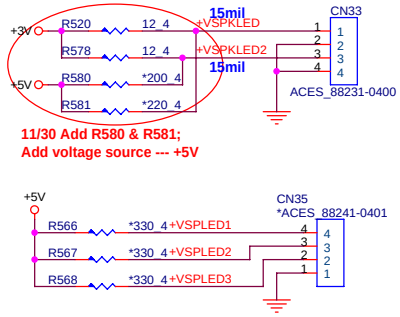

CPU FAN

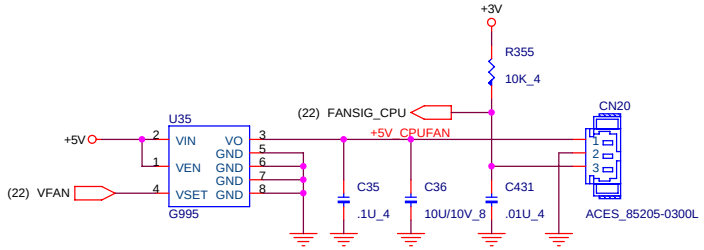

2ND FAN

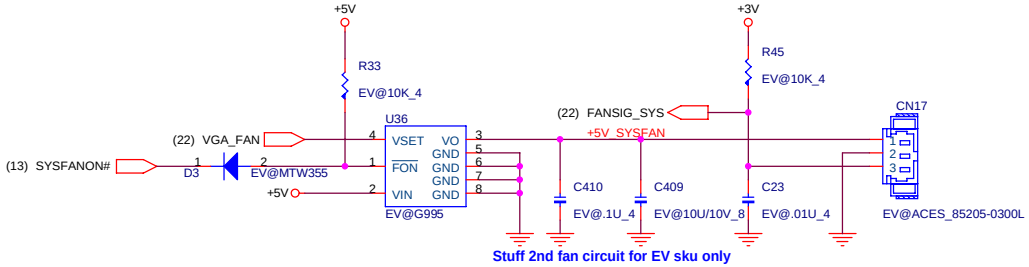

LED

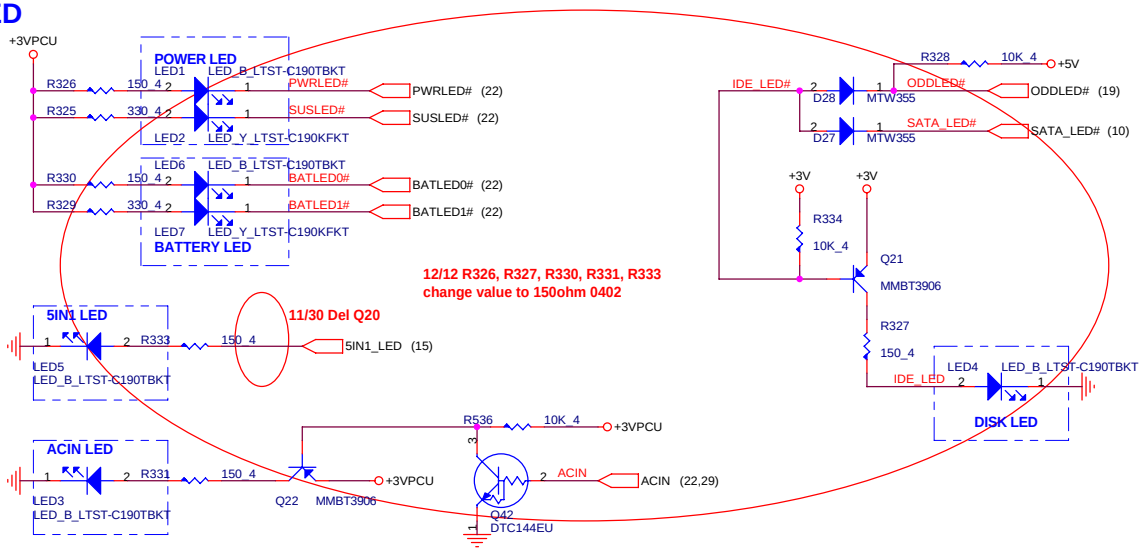

BUTTON BOARD

12/12 R55 ~ R58 change value to 150ohm 0402

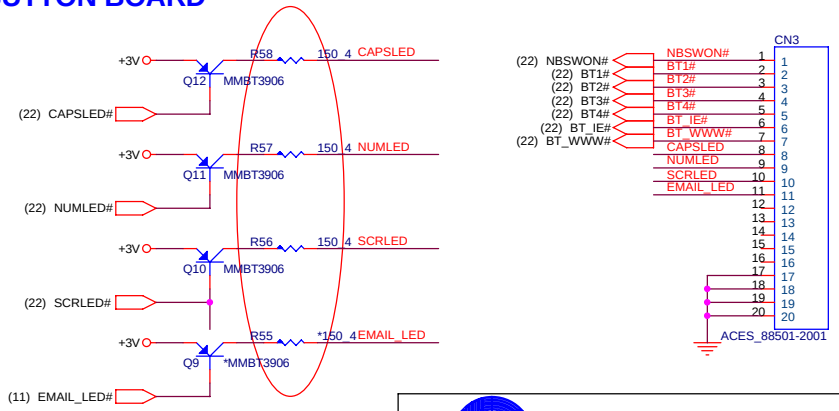

PROJECT :BD1
Quanta Computer Inc.

Size	Document Number	Rev
	KB/TP/LED/SWITCH	3B

Date: Monday, December 12, 2005 Sheet 23 of 32

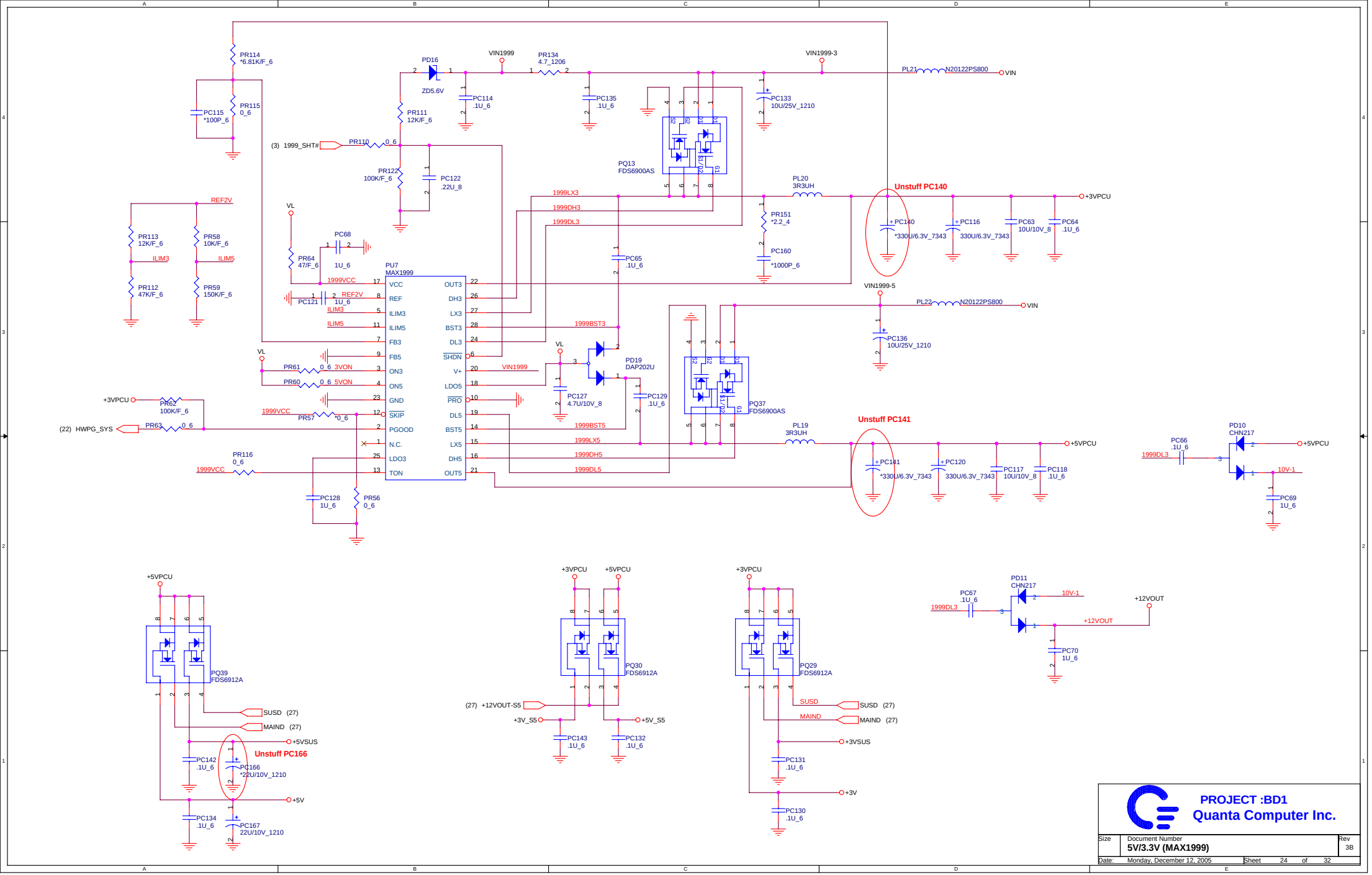
PR114 *6.81K/F_6
PR115 0_6
PC115 *100P_6
PD16 ZD5.6V
VIN1999
PR134 4.7_1206
VIN1999-3
PL21 N20122PS800
VIN
PC114 .1U_6
PC135 .1U_6
PC133 10U/25V_1210
PR111 12K/F_6
(3) 1999_SHT#
PR110 0_6
PR122 100K/F_6
PC122 .22U_8
PQ13 FDS6900AS
PL20 3R3UH
Unstuff PC140
+3VPCU
1999LX3
1999DH3
1999DL3
PR151 *2.2_4
PC160 *1000P_6
PC140 *330U/6.3V_7343
PC116 330U/6.3V_7343
PC63 10U/10V_8
PC64 .1U_6
REF2V
PR113 12K/F_6
PR58 10K/F_6
ILIM3
ILIM5
PR112 47K/F_6
PR59 150K/F_6
VL
PC68 1U_6
PR64 47/F_6
PU7 MAX1999
1999VCC
PC121 1U_6
PC65 .1U_6
VIN1999-5
PL22 N20122PS800
PC136 10U/25V_1210
1999BST3
PD19 DAP202U
PR61 0_6 3VON
PR60 0_6 5VON
PC127 4.7U/10V_8
PC129 .1U_6
PQ37 FDS6900AS
+3VPCU
PR62 100K/F_6
(22) HWPG_SYS
PR63 0_6
PR57 *0_6
1999BST5
1999LX5
1999DH5
1999DL5
PL19 3R3UH
Unstuff PC141
+5VPCU
PC141 *330U/6.3V_7343
PC120 330U/6.3V_7343
PC117 10U/10V_8
PC118 .1U_6
PR116 0_6
PC128 1U_6
PR56 0_6
PC66 .1U_6
PD10 CHN217
10V-1
PC69 1U_6
PQ39 FDS6912A
SUSD (27)
MAIND (27)
+5VSUS
Unstuff PC166
PC142 .1U_6
PC166 *22U/10V_1210
+5V
PC134 .1U_6
PC167 22U/10V_1210
PQ30 FDS6912A
(27) +12VOUT-S5
+3V_S5
+5V_S5
PC143 .1U_6
PC132 .1U_6
PQ29 FDS6912A
+3VSUS
PC131 .1U_6
+3V
PC130 .1U_6
PD11 CHN217
PC67 .1U_6
+12VOUT
PC70 1U_6
PROJECT :BD1
Quanta Computer Inc.
Size
Document Number
5V/3.3V (MAX1999)
Rev 3B
Date: Monday, December 12, 2005
Sheet 24 of 32

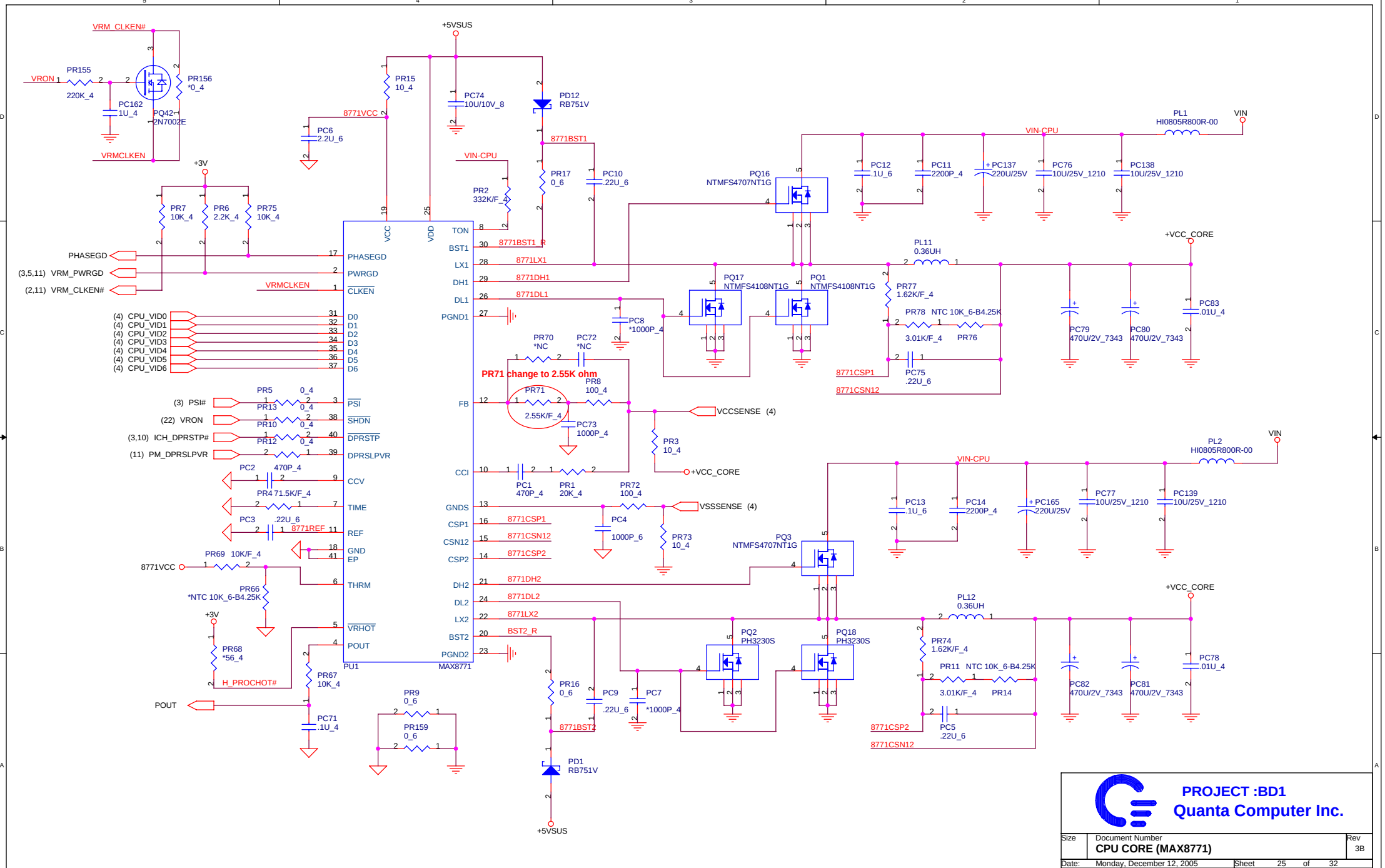

PROJECT :BD1
Quanta Computer Inc.

Size	Document Number	Rev
	CPU CORE (MAX8771)	3B
Date: Monday, December 12, 2005	Sheet 25 of 32	

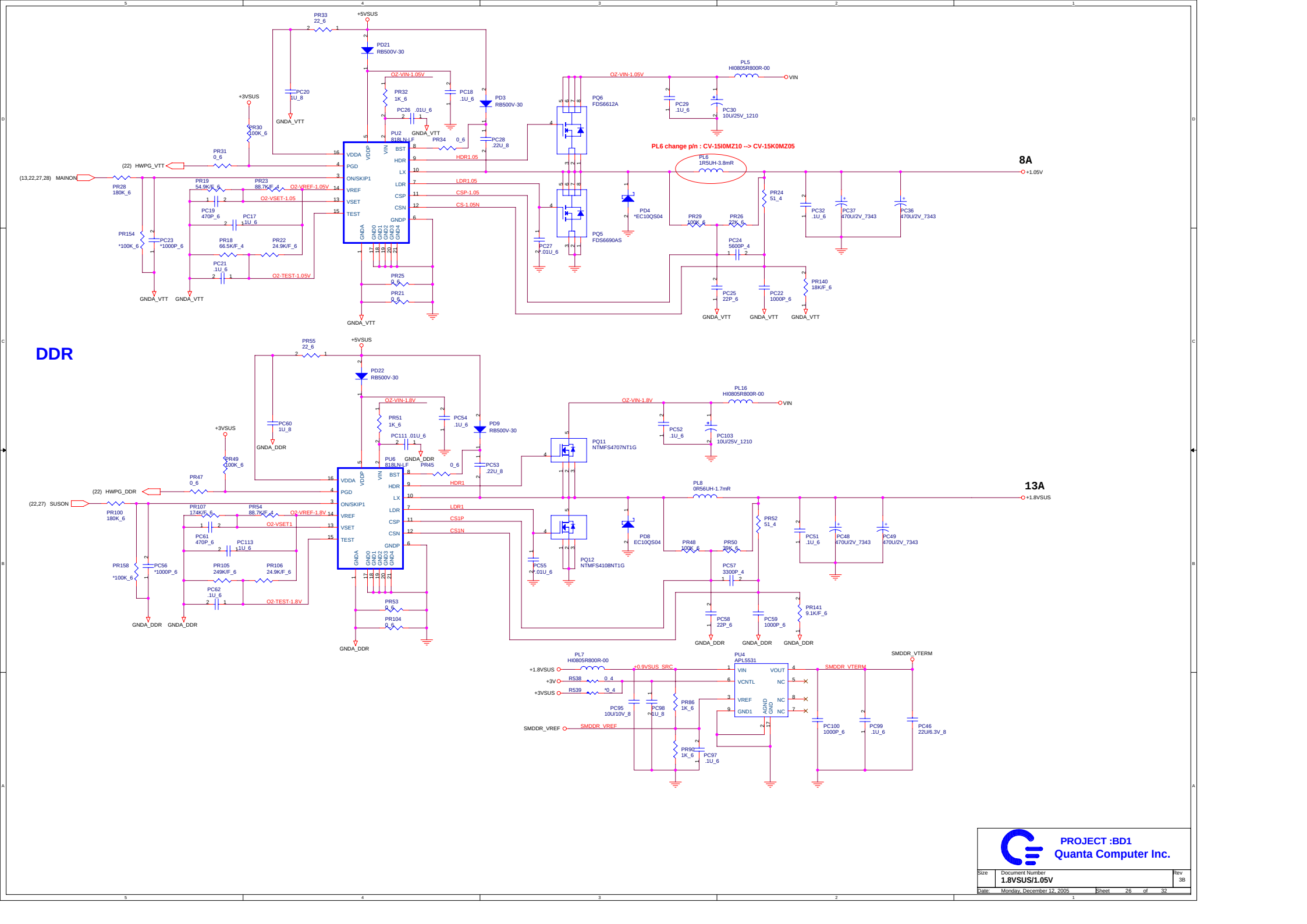

PROJECT :BD1
Quanta Computer Inc.

Size	Document Number	Rev
	1.8VSUS/1.05V	3B

Date: Monday, December 12, 2005 Sheet 26 of 32

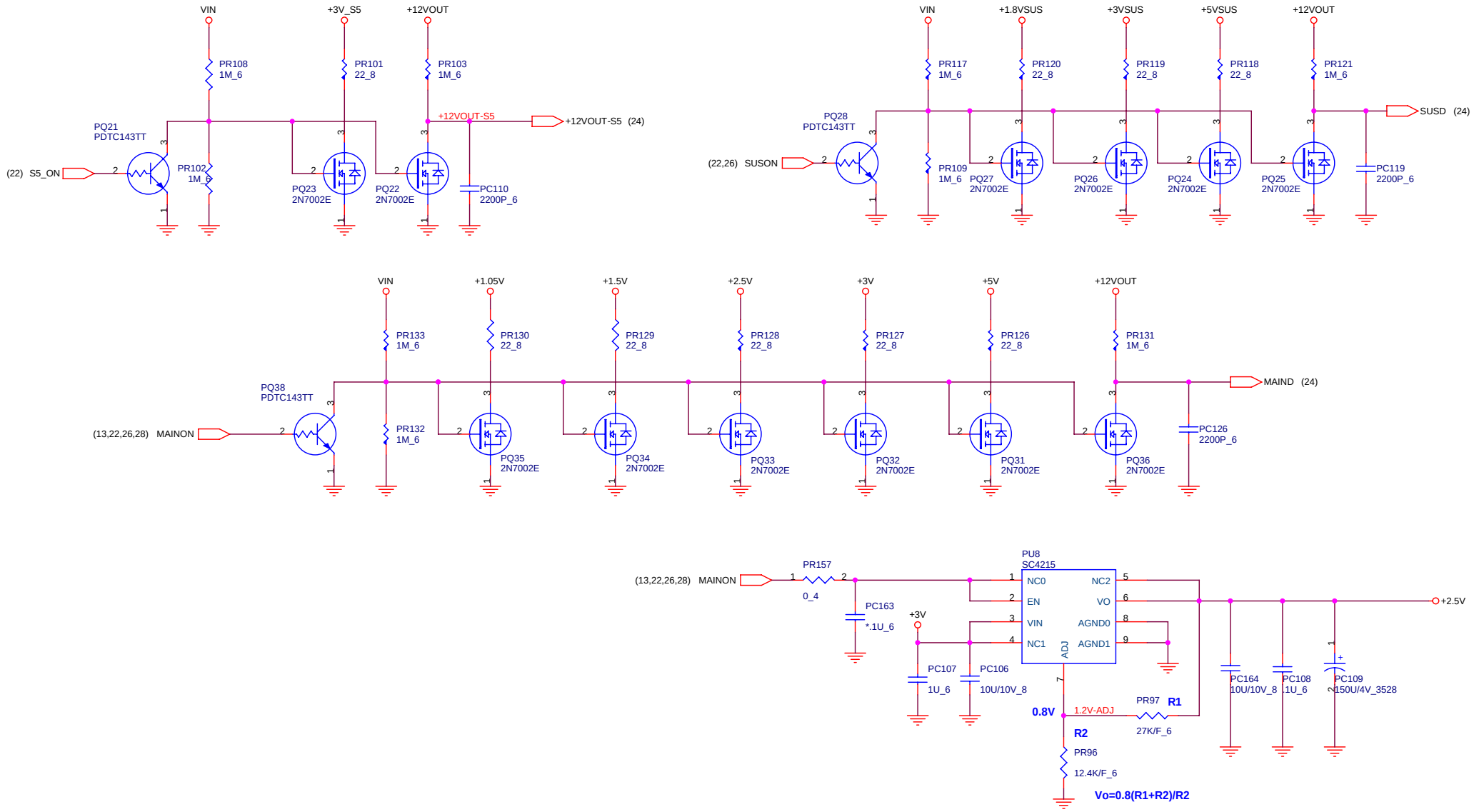

PROJECT :BD1

Quanta Computer Inc.

Size	Document Number	Rev
	2.5V/DISCHARGE	3B

Date: Monday, December 12, 2005 Sheet 27 of 32

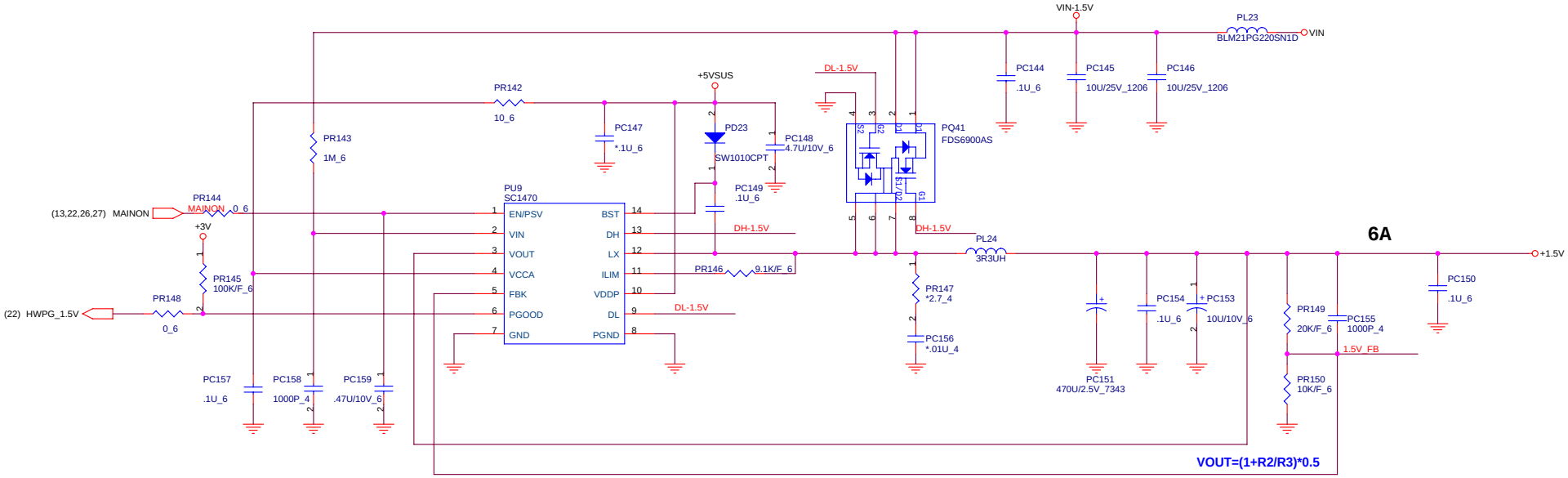

PROJECT :BD1

Quanta Computer Inc.

Size	Document Number	Rev
	+1.5V	3B

Date: Monday, December 12, 2005 Sheet 28 of 32

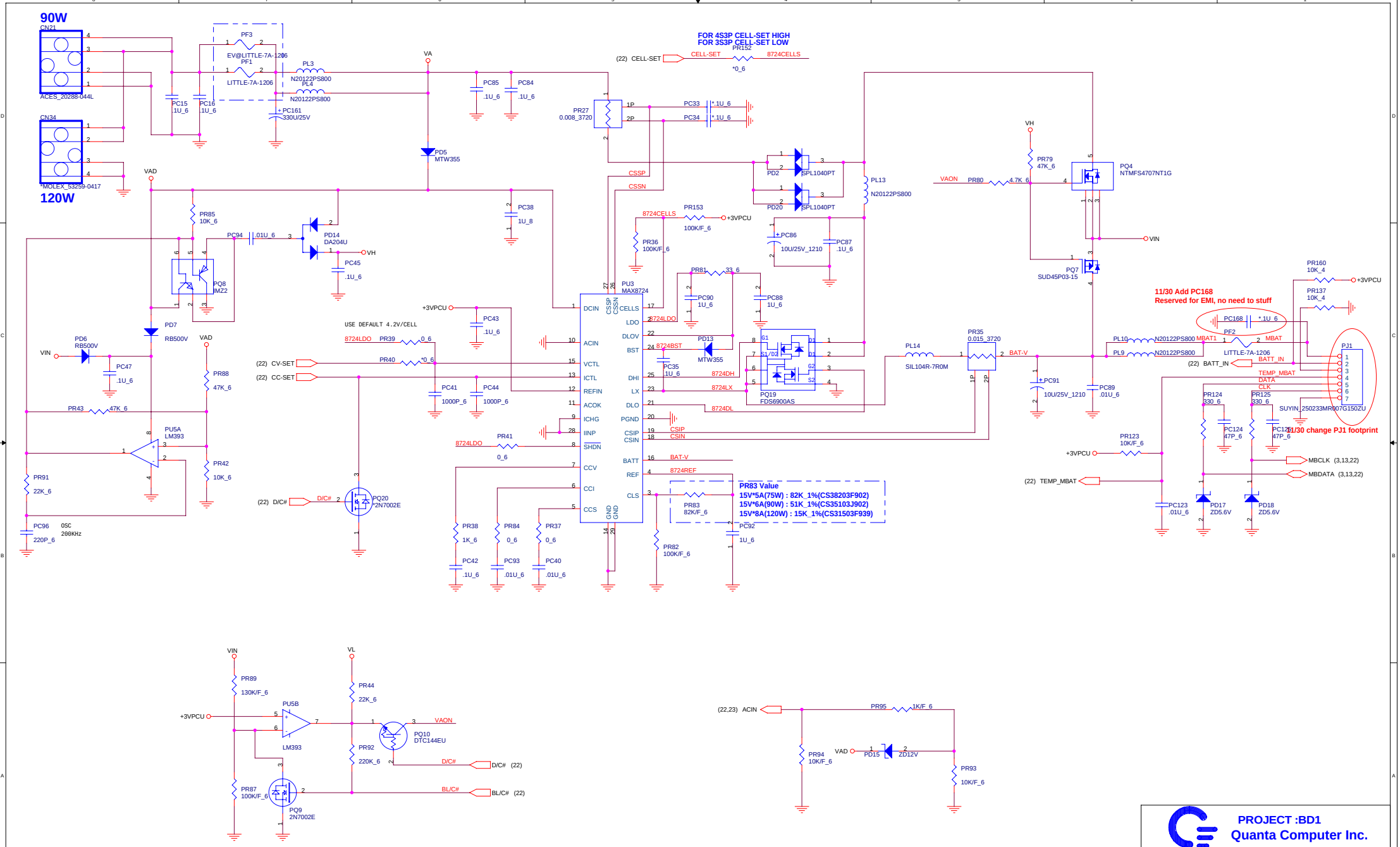

PROJECT :BD1
Quanta Computer Inc.

Size	Document Number	Rev
	BATTERY CHARGER	3B

Date: Monday, December 12, 2005 Sheet 29 of 32

MODEL:	REV:	CHANGE LIST:
BD1 MotherBoard	1A	FIRST RELEASE
	2A	Page2. Stuff R136, R427, R432; Unstuff R116, R390, R428, R429, R433, R434 Page3. U22 change P/N : AL001032048 --> AL001032030; U21 change P/N : DGG^9000403 --> DGG^9000055; R89 change value : 0ohm --> 330ohm; R103 change value : 330ohm --> 8.2Kohm; Delete R441; Add C625, Q38, Q39, Q40, Q41, R529, R530, R531, R532, R535, R533, R534 Page5. Stuff R162 for external vga to reverse the PCIE lane Page8. C257 change p/n : CH72201M881 --> CH7221M8854 Page10. U5 change P/N : AKE3D8AKA09 --> AKE3D8AKA17; Change C259, C260 stuff for GE sku only;Stuff R214, R455 Page11. Add R506 ~ R513, R517, T140 ~ T143; Delete T34, T58, T63 Change net : U25.AF19 : MBID1 --> GPIO21; U25.AH18 : MBID0 --> GPIO19; U25.F19 : GPIO12 --> EMAIL_LED#; U25.R4 : GPIO14 --> LID591#; U25.R3 : LAN_DISABLE# --> MBID0; U25.D20 : GPIO25 --> MBID1; U25.AD21 : LID591# --> GPIO35; U25.AE20 : EMAIL_LED# --> GPIO39; U25.B21 : MBID2 --> GPIO27; U25.A21 : GPIO26 --> MBID2; R155.1 : GPIO14 --> LID591# Page12. Delete R127; Add D30; Change net : +3VSUS --> +3V_S5; C248 change p/n : CH72201M881 --> CH7221M8854 Page13. C512, C513, C519, C524 change footprint : CC0805 --> CC0603; Unstuff C515; CN22 change footprint : SPS2F-D-SMX-20-X-X-20P-LUV --> 200109MA020G261ZR-20P-LUV Page14. Delete SW1; Add R518, R519, C602, C603; C20, C32 change footprint to CC0603; CN11 change footprint : SV-030105FR004T101XX-4P-EW3 --> SV-030018FR004S100FR-RVS-4P-V Page15. CN31 change footprint : 4IN1-R012-312-LR-44P --> 4IN1-R102-316-XX-44P; U32 change p/n : AJ074120T13 --> AJ084120T08 Page16. R490, R492 change value : 10Kohm --> 0ohm; CN9 change footprint : PCI-1CA4A5G1-TC2-LN-84P --> PCI-1CA4A501-TC-RD-84P Page17. U20.M13, U20.N14 net swap; Add R515, R516, R521 ~ R526, R537, C624; Delete T2, T79; Stuff R375; Unstuff R59, R374, R378; U19 change p/n : AKE3C8W0601; U19 change footprint : SOIC8-6-1_27 --> SOIC8-7_9-1_27 Page18. Add T147, Delete C28, Q6, R262; Stuff L35, L36; Unstuff R7, R15, R16, R21, R30, R338; R48 change value : 100Kohm --> 0ohm; R50 change value : 1Kohm --> 10Kohm; CN15 change footprint : USB020173MR004SX07ZX-4P-V --> USB-020173MR004G552ZR-4P-R-H; CN29 change footprint : NCARD-1CX43201-LN-RVS-26P --> EXPRESSCARD-1CX43202-BD-26P; CN1.1 change net : BT_POWER --> +3V Page19. Add C581 ~ C601, C604 ~ C623; Add HOLE33, PAD1 ~ PAD3; Delete HOLE2, HOLE16, HOLE19, HOLE32; HOLE7, HOLE8, HOLE11, HOLE15, HOLE18 change p/n : MBEW3001012 --> MBBD1009016; CN26 change p/n : DFHS50FR393 --> DFHS50FR369 Page20. U15 change P/N : AL1G0086005 --> AL1G0086013; C356, C361, C363, C388, C389, C397, C398, C399, C401, C402, C403, C405 change footprint to CC0603; Unstuff R303; Stuff R304; CN10 change pin define; Add Q36, Q37, R527, R528; CN32 change footprint : 88076-020XX-20P-RUV --> 88241-20XX-20P-L; Change net (codec digital power) : +3V --> +3VSUS; CN10 change p/n : DFWF04MS079 --> DFHD04MR701; CN10 change pin define Change net : CN32.4 : IRRX2 --> NC; CN32.6 : IRTX2 --> BT_LED#; CN32.8 : IRMODE --> LID591#; CODEC Power : +3V --> +3VSUS Page21. Add T144 ~ T146; Unstuff R283, R287 and Stuff R280, R288 to change the SIO address to 162E Page22. Stuff C309, C310, C311, C322, D16, R241 ~ R244, R246, U30; Unstuff U29, C313; Add D31, D32, R514; Delete T73, T76 Change net : U9.24 change net : LPCPD# --> BT_IE#; U9.25 change net : CLKRUN# --> BT_WWW#; U9.153 change net : BT_IE# --> BT_LED#; U9.154 change net : BT_WWW# --> NC; U9.156 change net to LAN_DISABLE# Page23. Add CN33, LED6, LED7, Q42, R520, R536; Delete Q23, R332; Q20, Q21 change to MMBT3904; Q22 change to MMBT3906; CN7 change p/n : DFHD06MS618 --> DFFC06FR212; +3V change to +3VPCU; LED1, LED2 change package; LED3 change p/n : BEAB0006Z07 --> BEGR0080Z07 Page24. PQ30, PQ39 change p/n to BAM76520001 Page25. PC11,PC14 change P/N : CH2226K1B16 --> CH22206KB16; Stuff PD1,PD12, PQ2, PQ17; Unstuff PR68; PR2.1 change net to VIN-CPU; PL11, PL12 change P/N : CV+60V0MZ33 --> DC+60Q0L001; PL11, PL12 change P/N : CV+60V0MZ33 --> DC+60Q0L001 Page26. Add PR135, PR136, R538, R539; PQ6, PQ11 change p/n to BAM76520001; PC24 change value : 4700P --> 5600P; PR26 change value : 62K --> 22K; PR50 change value : 100K --> 39K Page27. PR96 change value : 306_1% --> 604_1%; PR98 change value : 190_1% --> 180_1% Page28. Add CN34, PD20, PF3, PR137; PR94 change value : 6.8K_1% --> 10K_1%; PR95 change value : 10K_1% --> 1K_1%; PR89.1, PD6.2 change net : REFP --> VIN; PL14 change P/N : CV01044MZ18 --> CV-6880MZ01; PQ4 change p/n to BAM76520001; CN21 change footprint

MODEL : BD1 MB

PAGE	FROM	TO
1	2B	3A
2	2B	3A
3	2B	3A
4	2B	3A
5	2B	3A
6	2B	3A
7	2B	3A
8	2B	3A
9	2B	3A
10	2B	3A
11	2B	3A
12	2B	3A
13	2B	3A
14	2B	3A
15	2B	3A
16	2B	3A
17	2B	3A
18	2B	3A
19	2B	3A
20	2B	3A
21	2B	3A
22	2B	3A
23	2B	3A
24	2B	3A
25	2B	3A
26	2B	3A
27	2B	3A
28	2B	3A
29	2B	3A

MODEL:	REV:	CHANGE LIST:
BD1 MotherBoard	2B	Page2. Add R540; Stuff R124, R125, RP18 for GE sku only; Stuff R423 and Unstuff R413, R414, R415 for all sku Page3. Thermal sensor power change net : +3V --> +3VSUS; Add Q43, R565 for Thermaltrip circuit; Delete Q30, R386; Unstuff R384 Page5. R104, R106, R111 change footprint : RC0402 --> RC0603 Page7. R404 change value : 150_1% --> 75_1% Page8. Delete R233, R424, R452; L22 chnage p/n : CV+1003JN27 --> CVA9115MN10; R459 change footprint : RC0805 --> RC1206; Add C640, R552 ~ R557 to separate the PM & GM power state Page9. CN24.50 change net : PM_EXTTS#1 --> PM_EXTTS#0; PR231, PR232, PR234 change footprint : RC0402 --> RC0603 Page10. RTC charge power change net : +5VSUS --> +5VPCU; Delete RP31; Add R547 ~ R5479 Page11. U25.AA4 change net : ICH_PWROK --> PWROK_EC; Delete C471, D12, R142, R144, R391, R397, U23 to simplify the power ok circuit; Stuff R442 for GE sku; Stuff R445 for FE sku; Add C626, R544, R545, R550, R558 ~ R561; Delete T37, T41, T50, T51, T60, T115, T140, T141 Page12. Add L54, L55 to separate the lan power for FE & GE; Change net : +5VSUS --> +5V_S5; Add R551; Delete D30 to change the 5VREFSUS power Page13. Add C627 ~ C634 for EMI reserved; CN22 change p/n : DFHS20FS496 --> DFHD10MSA93; CN27.118 : LVDS_BLON --> EV_BLON; CN27.120 : DISP_ON --> EV_PNLON Page17. Stuff R377, Unstuff C455, C457, C459, L40, Q29, R376 to change the LAN 2.5V power source to chip internal LDO; Add L56, L57 for EMI reserved; C432, C433 change value : 22P --> 33P; U19 change footprint Page18. Change net : BT_PWRON# --> BT_RESET#; CN1 change p/n : DFFC20FR115 --> DFFC20FR204; CN4.(8,9) change net : USBOC#2 --> NC; U1.(5,8) change net : USBOC#0 --> NC; CN29 change p/n : DFHD26MR040 --> DFHD26MR180; L35, L36 change p/n : DC09004A014 --> CX201290009; Delete R7 Page19. C424, C425 change value : 4.7U --> 22U; Add C642; Delete HOLE13; HOLE27, HOLE28 change p/n : MBBD1007013 --> MBBD1011011; Add C635 ~ C639, PAD4 ~ PAD9 for EMI reserved Page20. C379, C382 change value : 1U --> 10U; Stuff R319, Unstuff C382 to change to mono mic function; Unstuff Q37, R528; Unstuff D25, Add C641, D33, R562, R563, R564, U37 to change the mute method for preventing the pop noise; CN28 change p/n : DFHS10FS476 --> DFHD12MS621; Stuff U14; Unstuff R296 Page21. Unstuff D22; C343, C348 change value : 12P --> 22P Page22. Stuff D18, Unstuff D15 change the power ok circuit; Change net : BT_PWRON# --> BT_RESET#; Add R541; Delete C313, U29, T75 Page23. R520 change value : 150 --> 100; Add R566 ~ R568, CN35 for speaker led function; Add U35, U36, Delete D8, Q3, Q7, Q8, Q26, R32, R53, R54 to change the fan control method Page24. Add PR151, PC160 for EMI reserved; PQ13, PQ37 change p/n : BAM49140023 --> BAM69000031; PQ39 change p/n : BAM76520001 --> BAM44180001; PQ30 change p/n : BAM76520001 --> BAM69120001; PQ29 change p/n : BAM48040017 --> BAM69120001; Add PC140 ~ PC143, PQ40; Delete PQ14, PQ15, PR65 Page25. PQ3, PQ16 change p/n : BAM70300Z06 --> BAM47070001; PQ1, PQ2, PQ17, PQ18 change p/n : BAM32300Z02 --> BAM41080005; PR2 change value : 200K_1% --> 332K_1%; PR11, PR78 change value : 5.11K_1% --> 3.01K_1%; PR71 change value : 3.48K_1% --> 2.55K_1%; PR74, PR77 change value : 2.94K_1% --> 1.62K_1%; PC73 change value : 4700P --> 1000P; PC79 ~ PC82 change p/n : CH747LM8801 --> CH747RY8800; PL11, PL12 change p/n : DC+60Q0L001 --> CV+18V0MZ04; Add PC137 ~ PC139, PC162, PQ42, PR155, PR156, PR159 Page26. PC46 change value : 10U --> 22U; PR28, PR100 change value : 100K --> 180K; Add PD21, PD22, PR140, PR141, PR154, PR158; Delete PC31, PC50, PR20, PR46, PR135, PR136; Stuff PD4, PD8; Unstuff PC23, PC56; PL6 change p/n : CV-33D5MZ04 --> CV-15I0MZ10; PL8 change p/n : CV-15I0MZ10 --> CV+56F0MZ01; PQ5 change p/n : BAM28030Z12 --> BAM66900022; PQ6 change p/n : BAM76520001 --> BAM66120027; PQ11 change p/n : BAM70300Z06 --> BAM47070001; PQ12 change p/n : BAM70300Z06 --> BAM41080005; PC19, PC61 change value : 1000P --> 470P; PC20, PC60 change value : 10U --> 1U; PC26, PC111 change value : .1U --> .01U; PC36, PC37, PC48, PC49 change value : 150U --> 470U; PR22, PR106 change value : 2.55K_1% --> 24.9K_1%; PR18 change value : 24.9K_1% --> 66.5K_1%; PR105 change value : 24.9K_1% --> 249K_1% Page27. Delete JP5, JP6, PC101, PC102, PC104, PC105, PC112, PL17, PL18, PR98, PR99, PU9, PU10 to remove the +1.5V LDO power source; Add PC163, PC164, PR157; Delete PL15; PC108 change value : 1000P --> 0.1U to adjust the +2.5V power source Page28. Add +1.5V PWM power circuit Page29. Add PC161; Add PR152; PD2, PD20 change p/n : BCSBM104Z01 --> BCPL1040Z18; PQ4 change p/n : BAM76520001 --> BAM47070001; PQ7 change p/n : BAM48350024 --> BAM45030Z09; Add PR153; PR36 change value : 0 --> 100K/F_6; PQ19 change p/n : BAM49140023 --> BAM69000031; PL14 change p/n : CV-6880MZ01 --> CV-7048MZ01
	3A	Page3. Stuff Q43, Unstuff C625,R565 for thermaltrip# function Page12. C505 change footprint : CC7343 --> CC3528, change value : 330U --> 150U; Add C643 Page14. Add R569 for DVI hot plug detection; Add R572, R573 Page15. CN25 change footprint : 1394-020115FB004S500ZL-4P-H --> 1394-020015FR004S513ZL-RVS-4P-H, change p/n : DFHD04MR647 --> DFDS04FR051 Page17. Delete R78, Add D35 for GigaLan disable function Page18. Add R574 ~ R577 ; C325,C326,C550,C551 change to 0 ohm Page19. PAD6 delete the GND net and add plate , C411 change to 330U Page20. CN32 change p/n : DFFC20FR115 --> DFFC20FR212 Page21. Add Q44, R571 for CIR wakeup function Page22. Add R570 for lid wakeup function; Add D34 Page23. CN3 change p/n : DFFC20FR115 --> DFFC20FR212 Page24. PD10, PD11 change footprint : SOT23 --> UMT ; PC166,PC167 change to 22U Page25. PR155 change value : 1K --> 220K; PC162 change value : 0.1U --> 1U; PC137 change value : 470U --> 220U; Add PC165 Page26. Unstuff PD4; Delete JP1, JP2, JP3, JP4 Page27. Delete JP7 Page28. Delete JP9, JP10; PR146 change value : 18K_1% --> 9.1K_1%; PC151 change value : 470U/2V --> 470U/2.5V Page29. PJ1 change p/n : DFHD07MR641 --> DFHD07MR675

MODEL : BD1 MB

PAGE	FROM	TO
1	2B	3A
2	2B	3A
3	2B	3A
4	2B	3A
5	2B	3A
6	2B	3A
7	2B	3A
8	2B	3A
9	2B	3A
10	2B	3A
11	2B	3A
12	2B	3A
13	2B	3A
14	2B	3A
15	2B	3A
16	2B	3A
17	2B	3A
18	2B	3A
19	2B	3A
20	2B	3A
21	2B	3A
22	2B	3A
23	2B	3A
24	2B	3A
25	2B	3A
26	2B	3A
27	2B	3A
28	2B	3A
29	2B	3A

Quanta Computer Inc.

PROJECT : BD1	APPROVE BY: SAINT LIN	DRAWING BY:DILBERT YU	REV 3B
MB ASSY'S P/N : 31BD1MBXXXX	PROJECT LEADER: SAINT LIN	DOCUMENT NO:	DATE :2005/12/02

COVER SHEET 2/3

Size | Document Number: Change List -- 2 | Rev: 3B

Date: Monday, December 12, 2005 | Sheet 31 of 32

MODEL:	REV:	CHANGE LIST:
BD1 MotherBoard	3B	Page2. Add C647~C653 to reserve. Page8. L14 package change to RC0805. Page15. Add R582 for TI-7412, in TI-7412 Pin-G6 is +3V power. Page19. Add PAD10~PAD12 for EMI. Page20. Del Q37,R528 --- not use. Net name change to Kill_LED from BT_LED Net name change to Kill_LED# from BT_LED#. Page23. Del Q20 for 5IN1 LED. Add R580 and R581to support speaker voltage source can be change to +5V. R520 and R578 change to 12ohm for speaker current (9~10mA). Page29. Add PC168 for EMI change Battery connector for 100W.

MODEL : BD1 MB

PAGE	FROM	TO
1	3A	3B
2	3A	3B
3	3A	3B
4	3A	3B
5	3A	3B
6	3A	3B
7	3A	3B
8	3A	3B
9	3A	3B
10	3A	3B
11	3A	3B
12	3A	3B
13	3A	3B
14	3A	3B
15	3A	3B
16	3A	3B
17	3A	3B
18	3A	3B
19	3A	3B
20	3A	3B
21	3A	3B
22	3A	3B
23	3A	3B
24	3A	3B
25	3A	3B
26	3A	3B
27	3A	3B
28	3A	3B
29	3A	3B

Quanta Computer Inc.

PROJECT : BD1	APPROVE BY: SAINT LIN	DRAWING BY:DILBERT YU	REV 3B
MB ASSY'S P/N : 31BD1MBXXXX	PROJECT LEADER: SAINT LIN	DOCUMENT NO:	DATE :2005/12/02

COVER SHEET 3/3

Size | Document Number: Change List --- 3 | Rev 3B

Date: Monday, December 12, 2005 | Sheet 32 of 32