T-note System Block Diagram

http://hobi-elektronika.net

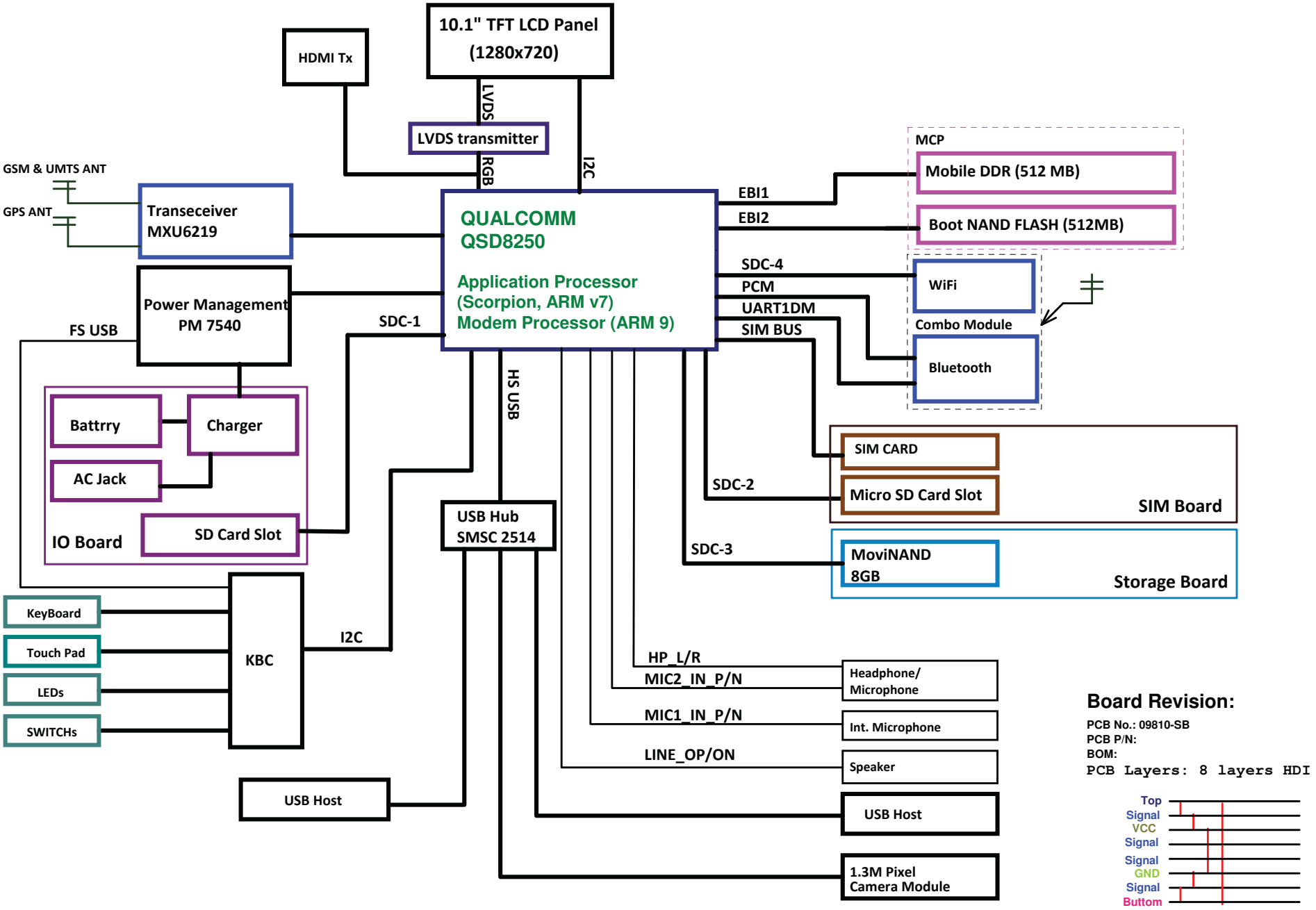

Board Revision:

PCB No.: 09810-SB
PCB P/N:
BOM:
PCB Layers: 8 layers HDI

緯創資通 Wistron Corporation
21F, 88, Sec.1, Hsin Tai Wu Rd., Hsichih,
Taipei Hsien 221, Taiwan, R.O.C.

Title: Block Diagram		
Size: C	Document Number: T-note	Rev: SC
Date: Tuesday, June 30, 2009	Sheet 1 of 34	

http://hobi-elektronika.net

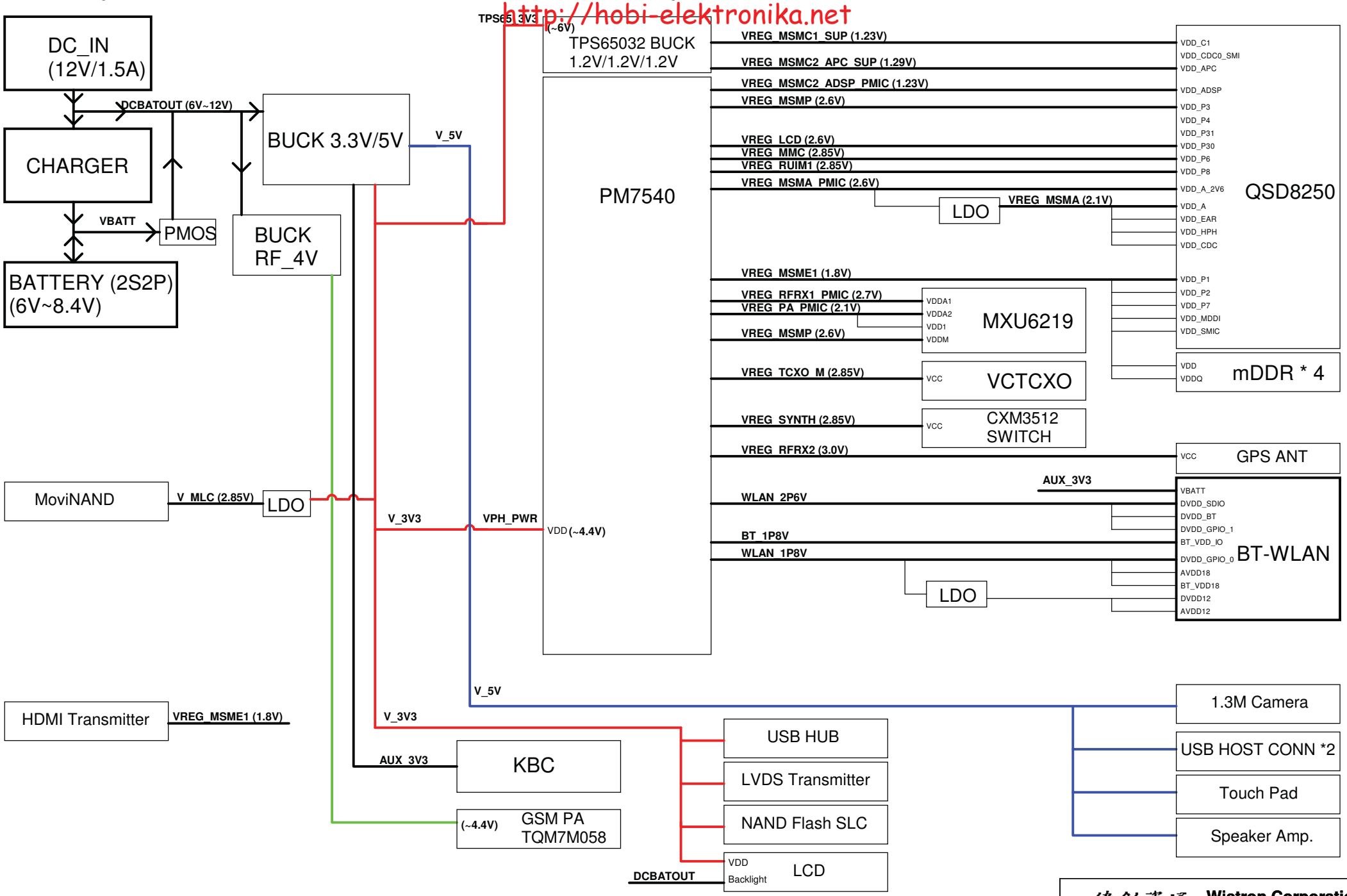

緯創資通	**Wistron Corporation** 21F, 88, Sec.1, Hsin Tai Wu Rd., Hsichih, Taipei Hsien 221, Taiwan, R.O.C.
Title	Power Block
Size A3	Document Number **T-Note**
Rev	SC
Date: Tuesday, June 30, 2009	Sheet 2 of 32

http://hobi-elektronika.net

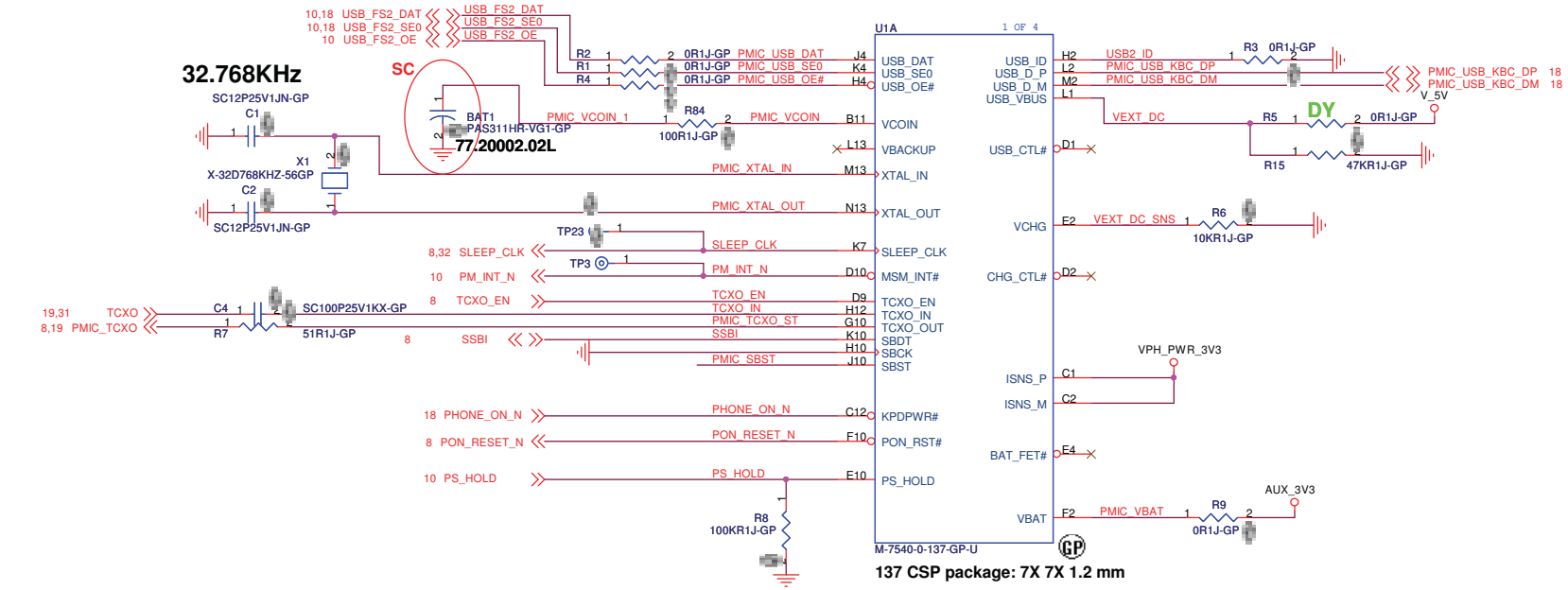

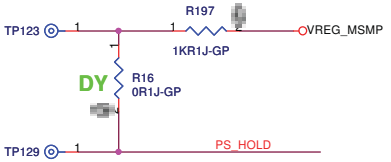

Put TP123 and TP129 out of shielding can
TP123 connect with TP129 at fixture side

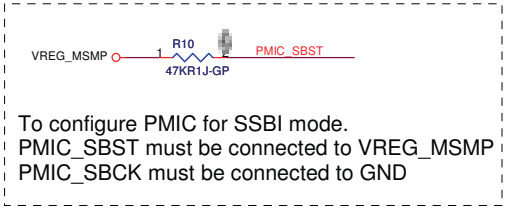

To configure PMIC for SSBI mode.
PMIC_SBST must be connected to VREG_MSMP
PMIC_SBCK must be connected to GND

緯創資通 Wistron Corporation
21F, 88, Sec.1, Hsin Tai Wu Rd., Hsichih,
Taipei Hsien 221, Taiwan, R.O.C.

Title	PM7540 (Charger)
Size A3	Document Number T-Note
Rev	SC
Date: Tuesday, June 30, 2009	Sheet 3 of 34

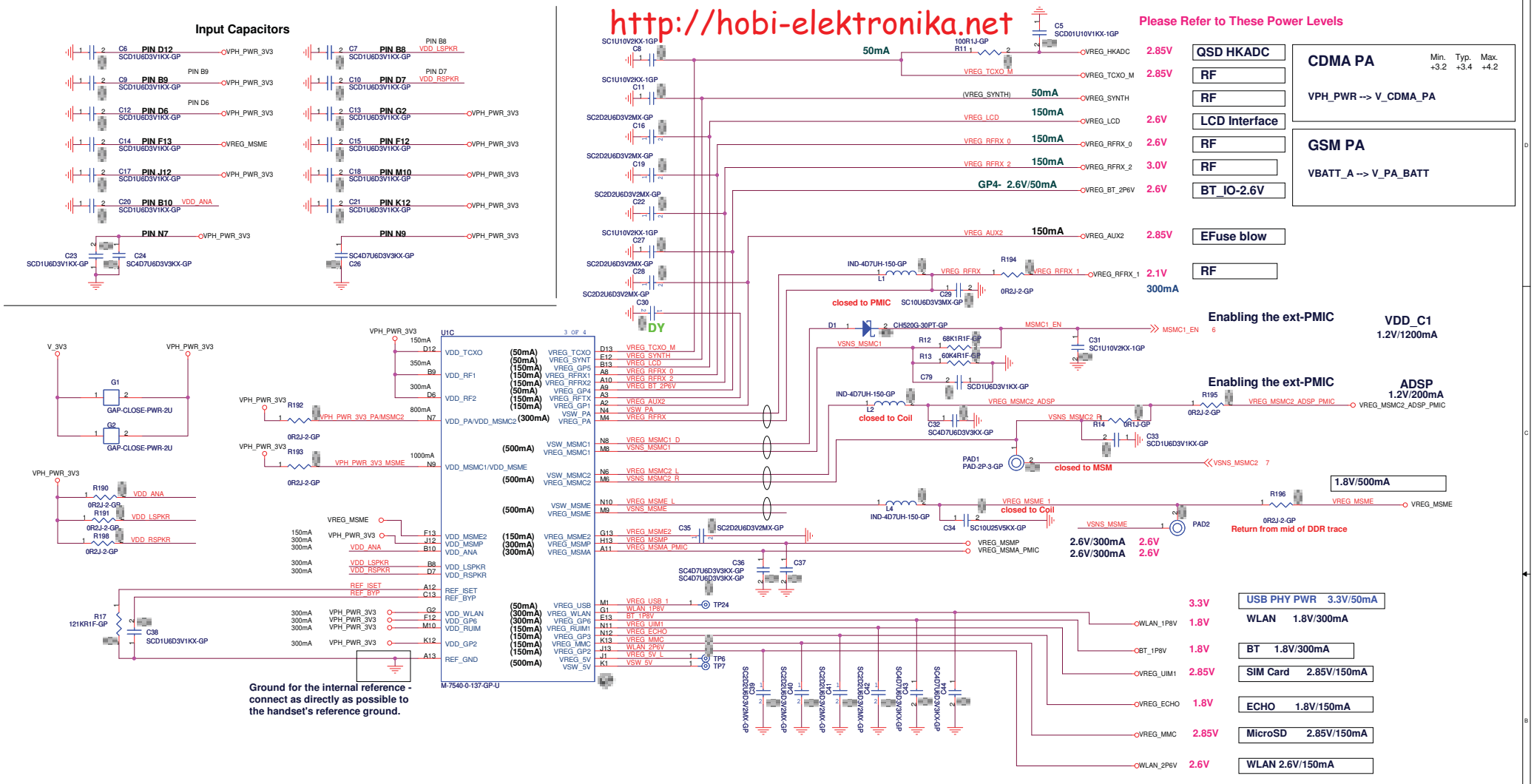

Type/name 1 2	Default conditions 3	Voltage range	Intended use
SMPS - Boost			
+5 V (500 mA)	Off, 5.000 V	3.000 to 6.100 V	USB-OTG host, white LEDs, camera flash
SMPS - Buck			
MSMC1 (500 mA)	On, 1.200 V	0.750 to 3.050 V	MSM core #1; DVS available
MSMC2 (500 mA)	On, 1.200 V	0.750 to 3.050 V	MSM core #2; DVS available
MSME (500 mA)	On, 1.800 V	0.750 to 3.050 V	Devices on EBI #1 bus
PA (300 mA)	Off, 1.800 V	0.750 to 3.050 V	Power amplifier(s); DVS available
Linear - 300 mA			
MSMA 4	On, 2.600 V	1.500 to 3.050 V	MSM analog circuits
MSMP 6	On, 2.600 V	1.500 to 3.050 V	MSM pad voltage and other IC digital I/Os
WLAN	Off, 2.850 V	1.500 to 3.050 V	802.11 wireless LAN Bluetooth
GP6 (BT)	Off, 2.850 V	1.500 to 3.050 V	Bluetooth
Linear - 150mA			
MMC	Off, 2.850 V	1.500 to 3.050 V	Mtimedia or SD circuits
MSME2	On, 1.500 V	0.750 to 1.525 V	Devices on EBI #2 bus
RFRX1	Off, 2.850 V	1.500 to 3.050 V	First of two RF receiver circuit supplies
RFRX2	Off, 2.850 V	1.500 to 3.050 V	Second of two RF receiver circuit supplies
RFTX	Off, 2.850 V	1.500 to 3.050 V	RF transmitter circuits
RUIM1	Off, 2.850 V	1.500 to 3.050 V	RUIM module #1
GP1 (CAM)	Off, 2.850 V	1.500 to 3.050 V	Camera circuits
GP2 (MDDI)	Off, 2.850 V	1.500 to 3.050 V	MDDI circuits
GP3 (RUIM2)	Off, 2.850 V	1.500 to 3.050 V	RUIM module #2
GP5 (AUX2)	Off, 2.850 V	1.500 to 3.050 V	Auxiliary #2 analog circuits
Linear - 50 mA			
SYNT	Off, 2.850 V	1.500 to 3.050 V	Tx VCO and PLL circuits
TCXO	On, 2.850 V	1.500 to 3.050 V	VCTCXO and Rx VCO and PLL circuits
USB	Off, 3.300 V	3.000 V to 6.100 V	Internal USB transceiver; not used off-chip
GP4 (AUX1)	Off, 2.850 V	1.500 to 3.050 V	Auxiliary #1 analog circuits
Linear -			
MIC bias	Off, 2.000 V	1.73, 1.80, 1.93, 2.00 V	Microphone bias

WLAN/BT Power
1.2V : 1.2V +/-5% (ripple Vpp<10mV) 50mA
1.8V : 1.8V +/-5% (ripple Vpp<10mV) 80mA
VBATT : 3.2~4.2 (Recommend 3.3V~3.6V, ripple Vpp<10mV) 200mA
SDIO & Interface : Need to meet SDIO High signal level & IO level of BT

緯創資通 Wistron Corporation
21F, 88, Sec.1, Hsin Tai Wu Rd., Hsichih, Taipei Hsien 221, Taiwan, R.O.C.
Title: PM7540 (System Power)
Size: C | Document Number: T-note | Rev: SC
Date: Tuesday, June 30, 2009 | Sheet 4 of 34

PM7540 ADC/AMP

http://hobi-elektronika.net

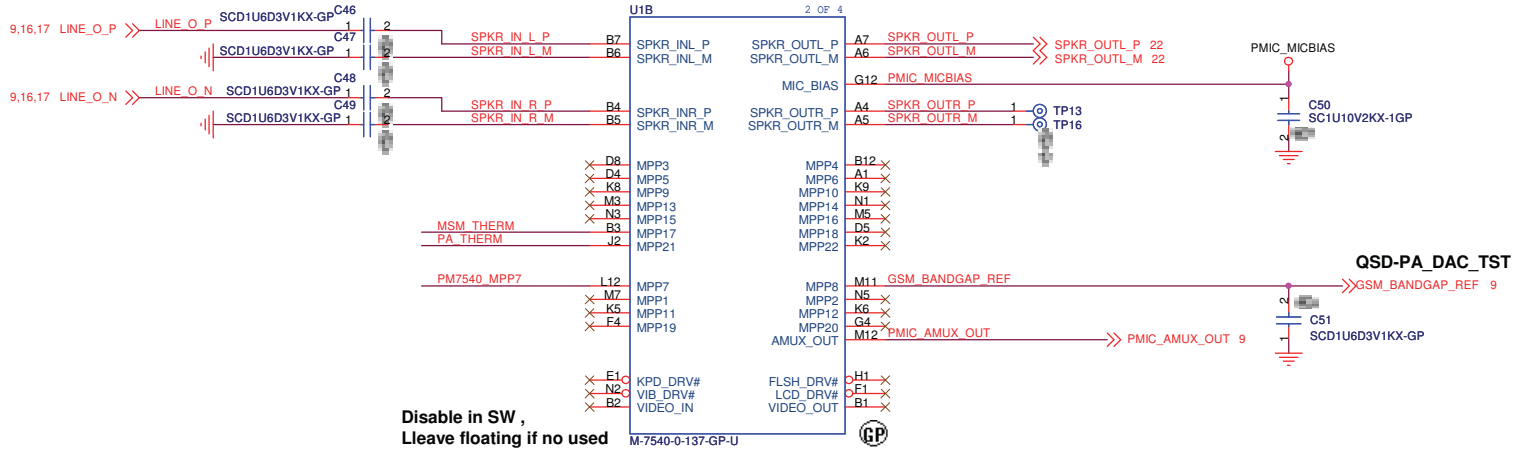

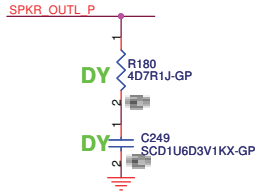

SIM Driver

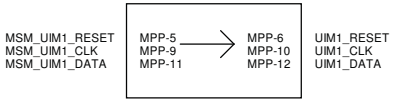

MSM Side		RUIM side	
MPP-1	AMUX_IN1	MPP-2	AMUX_IN2
MPP-3	CBL0PWR_N	MPP-4	CBL1PWR_N
MPP-5	RUIM_M_RST	MPP-6	RUIM_RST
MPP-7	GP1_DRV_N	MPP-8	REF_OUT
MPP-9	RUIM_M_CLK	MPP-10	RUIM_CLK
MPP-11	RUIM_M_IO	MPP-12	RUIM_IO

Pairs intend to be used as RUIM level translator:
MPP-5/6, MPP-9/10, MPP-11/12

MSM Thermistor

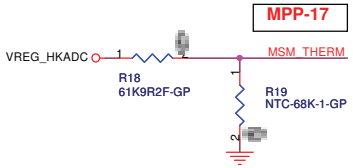

Note: Place close to MSM and SDRAM

PA Thermistor

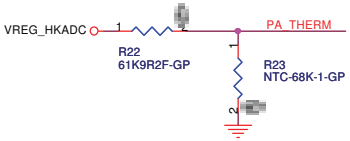

Note: Place close to PA

QSD8K USB PHY Power

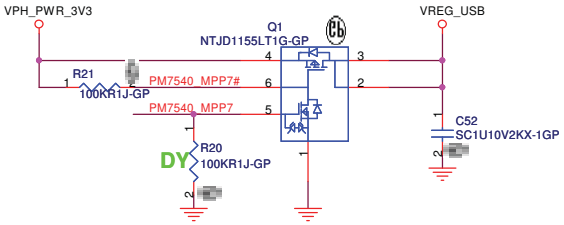

PM7540 GND

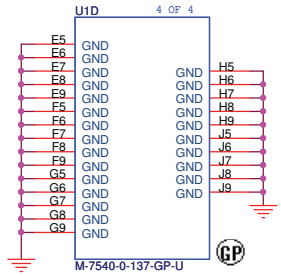

緯創資通 Wistron Corporation
21F, 88, Sec.1, Hsin Tai Wu Rd., Hsichih,
Taipei Hsien 221, Taiwan, R.O.C.

Title	PM7540 (Audio, Power, MGT)	
Size A3	Document Number T-note	Rev SC
Date: Tuesday, June 30, 2009	Sheet 5 of 34	

http://hobi-elektronika.net

ADSP Power
Digital Core Power

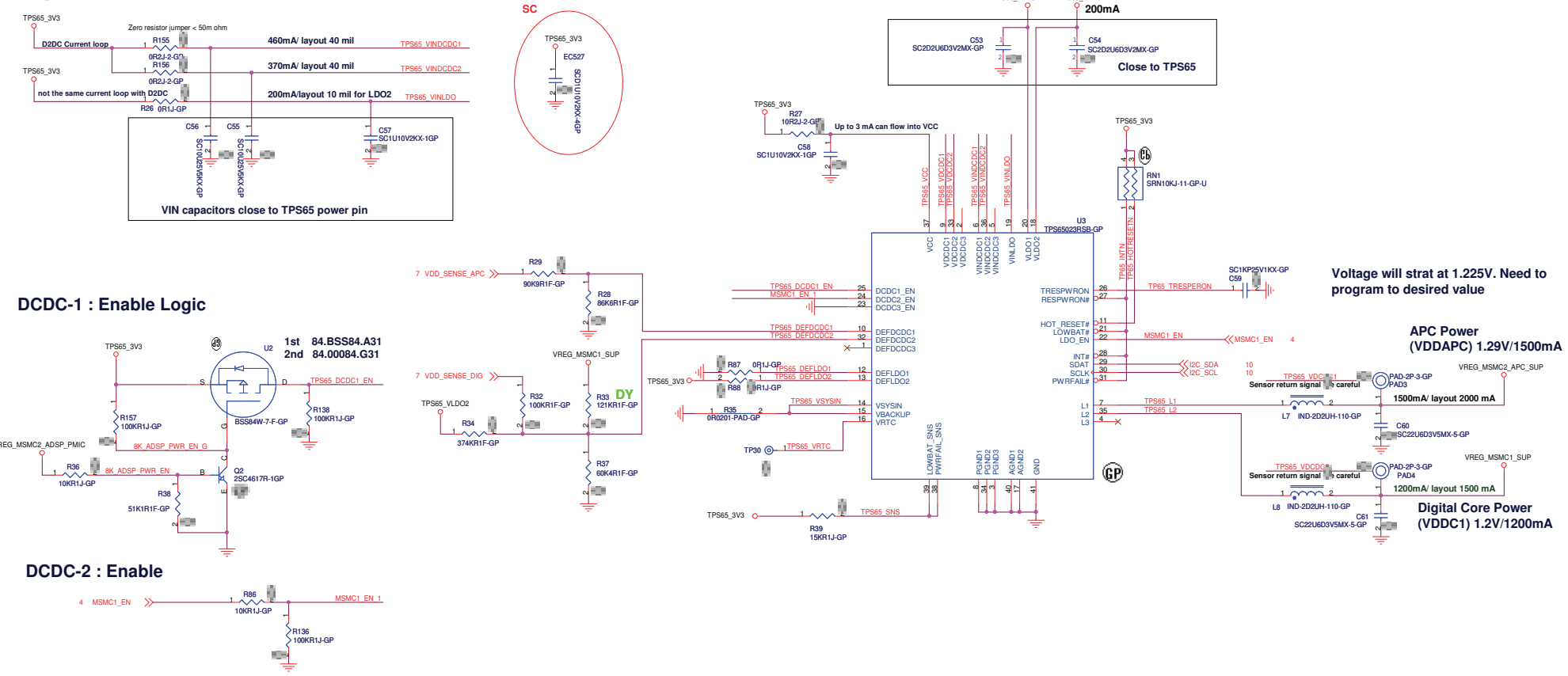

DCDC-1 : Enable Logic

DCDC-2 : Enable

MSMA Power

+2.1V (only for ES2 or later)

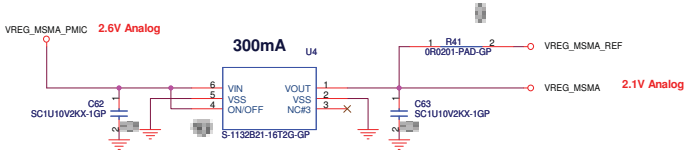

緯創資通	**Wistron Corporation** 21F, 88, Sec.1, Hsin Tai Wu Rd., Hsichih, Taipei Hsien 221, Taiwan, R.O.C.	
Title	DSP Power	
Size C	Document Number T-note	Rev SC
Date: Monday, July 06, 2009	Sheet 6 of 34	

http://hobi-elektronika.net

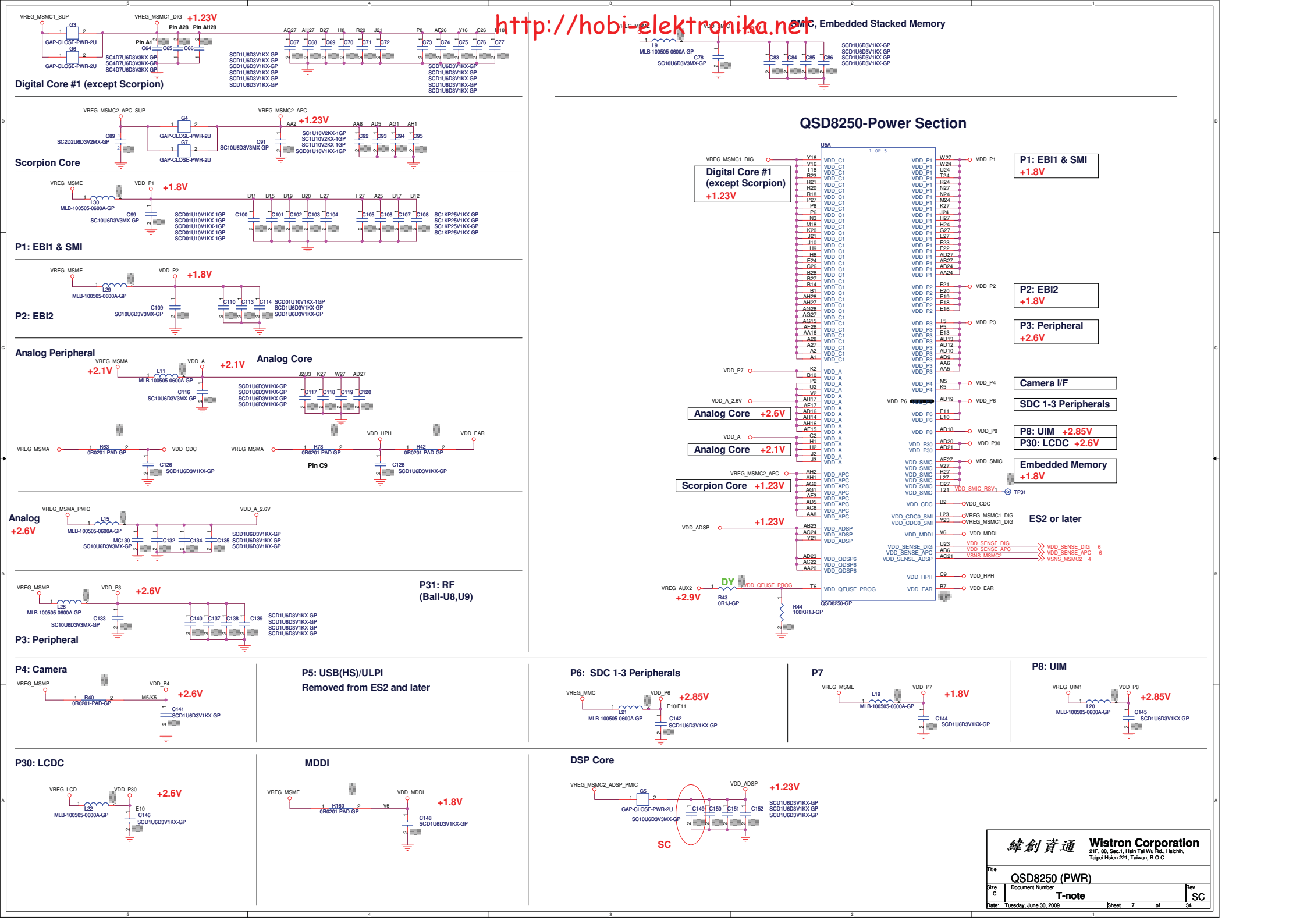

http://hobi-elektronika.net

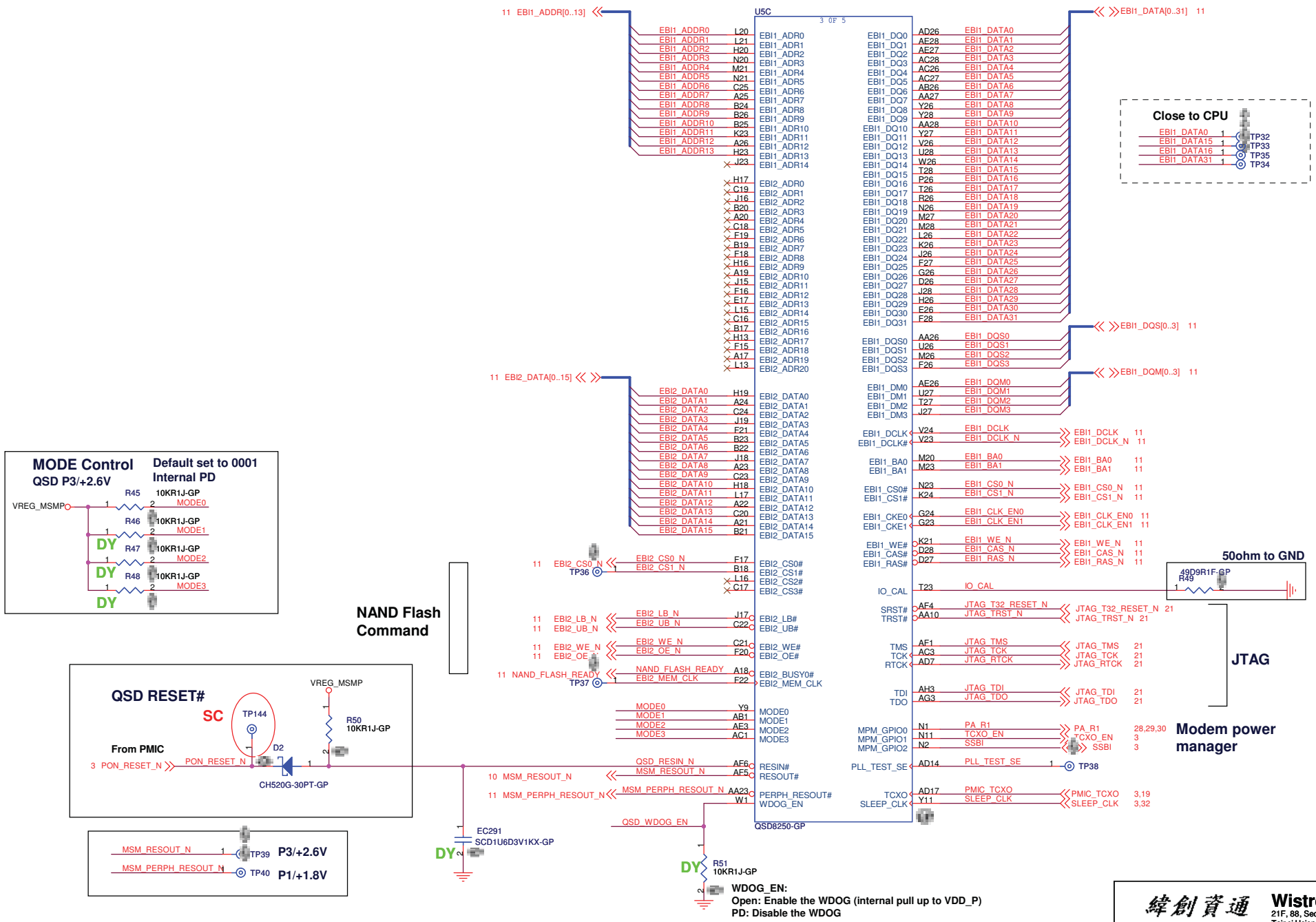

緯創資通 **Wistron Corporation**
21F, 88, Sec.1, Hsin Tai Wu Rd., Hsichih,
Taipei Hsien 221, Taiwan, R.O.C.

Title	QSD8250 (EBI-1/2)	
Size A3	Document Number T-note	Rev SC
Date: Tuesday, June 30, 2009	Sheet 8 of 34	

http://hobi-elektronika.net

QSD8250-GND Section

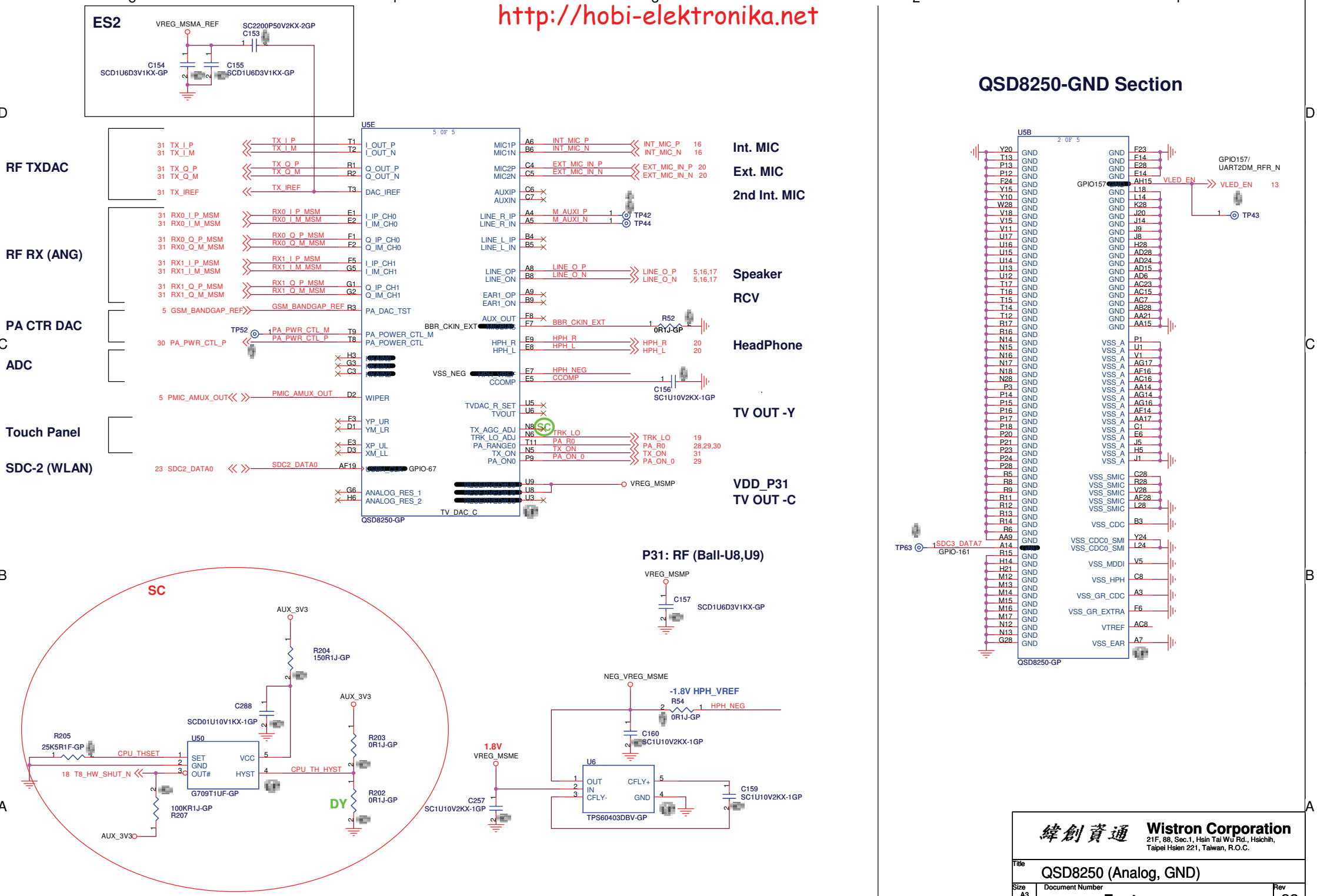

緯創資通	**Wistron Corporation** 21F, 88, Sec.1, Hsin Tai Wu Rd., Hsichih, Taipei Hsien 221, Taiwan, R.O.C.
Title	QSD8250 (Analog, GND)
Size A3	Document Number T-note
Rev	SC
Date: Monday, July 06, 2009	Sheet 9 of 34

QSD (GPIO, MDDI)

QSD 8650 71.Q8650.00U
QSD 8250 71.Q8250.00U

http://hobi-elektronika.net

HW MB VERSION

default is INPUT P/L

MB VERSION	CONFIG MODE1	CONFIG MODE2	CONFIG MODE3
SA	0	0	0
SB	0	0	1
SC	0	1	0
-1	0	1	1
-2	1	0	0
-3	1	0	1
-4	1	1	0
-5	1	1	1

MCP VERSION	CONFIG MODE5
Hynix	0
Samsung	1

3G VERSION	CONFIG MODE4
WCDMA	0
CDMA2000	1

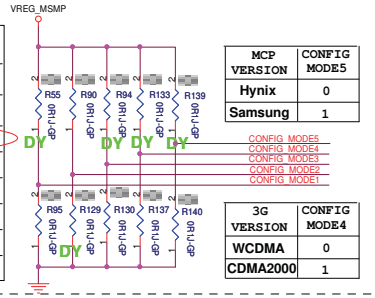

I2C Level Shifter

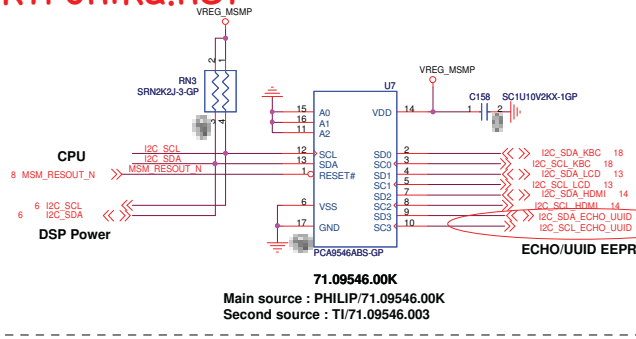

71.09546.00K
Main source : PHILIP/71.09546.00K
Second source : TI/71.09546.003

SDC

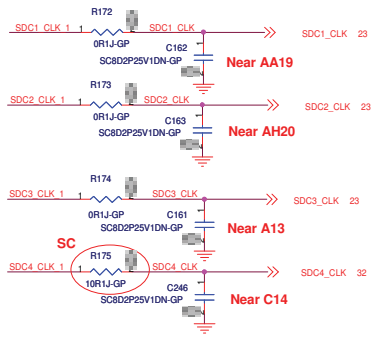

USB (HS)

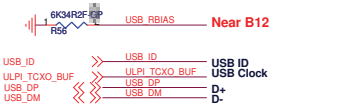

Boot Scure

Determines the boot mode of the chip:
0: non-secure boot
1: secure boot (boot code is authenticated)

Floating Now

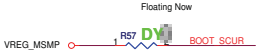

WakeUp and Higher Voltage GPIO
ES2 GPIO # 21, 24, 28, 35, 36, 37, 38, 39, 40, 41, 42, 45, 49, 51, 53, 64, 66, 68, 69, 83, 86, 90, 92, 94, 139, 141, 145, 152, 153

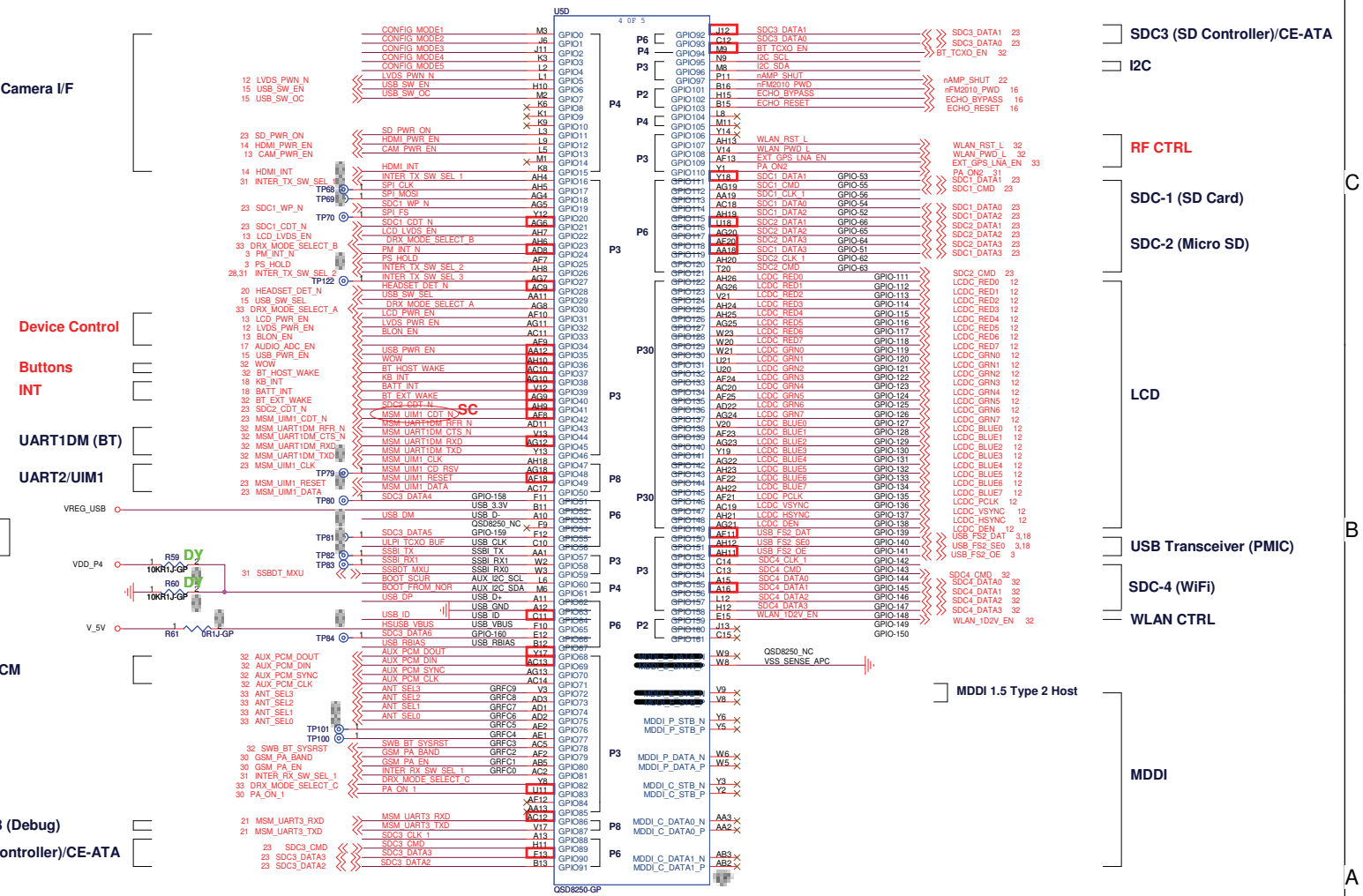

TPS65023

The TPS65023 has a 7-bit address: 1001000, other addresses are available upon contact with the factory.

HDMI Transmitter

緯創資通 Wistron Corporation
21F, 88, Sec.1, Hsin Tai Wu Rd., Hsichih, Taipei Hsien 221, Taiwan, R.O.C.

Title: QSD8250 (GPIO)
Size: Custom | Document Number: T-Note | Rev: SC
Date: Tuesday, June 30, 2009 | Sheet 10 of 34

http://hobi-elektronika.net

Memory MCP
DDR SDRAM & NAND Flash

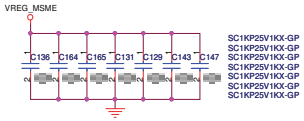

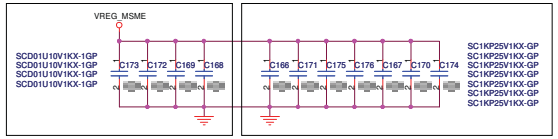

EBI2 (NAND FLASH)

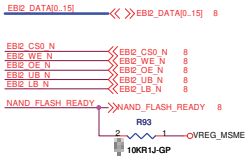

EBI1 (DDR)

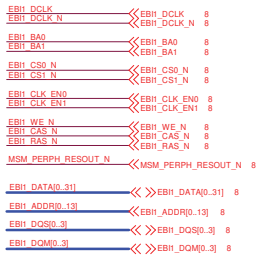

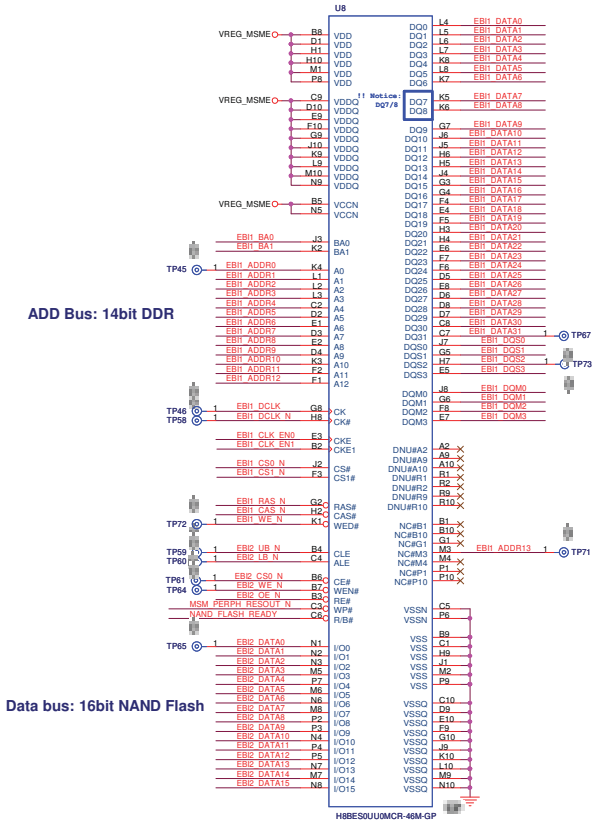

P/N: 72.H8BES.B0U
Hynix H8BES0UU0MCR-46M-GP (MCP4G+4G)
4Gb (256Mb x16) NAND Flash
+ 4Gb (64Mb x32 2/CS 2CKE) mobile DDR

緯創資通 Wistron Corporation
21F, 88, Sec.1, Hsin Tai Wu Rd., Hsichih,
Taipei Hsien 221, Taiwan, R.O.C.

Title: MCP		
Size: A2	Document Number: T-Note	Rev: SC
Date: Tuesday, June 30, 2009	Sheet 11 of 34	

http://hobi-elektronika.net

LCD I/F FILTER

(Close to CPU)

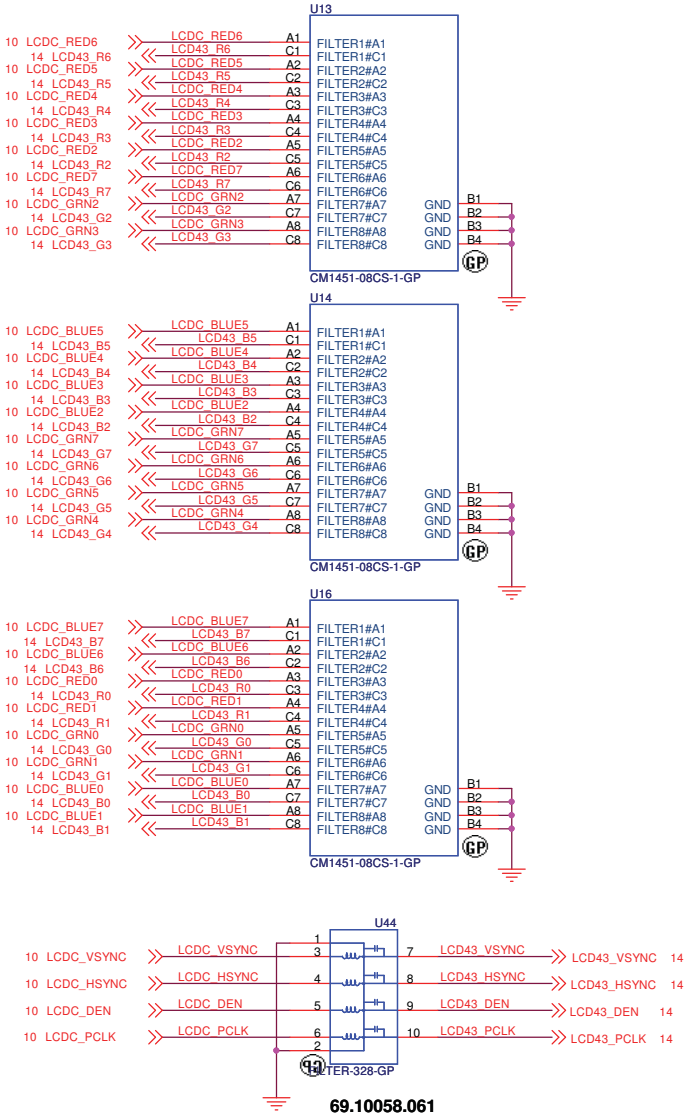

LVDS Transmitter

3.3V Power Switch for LVDS Transmitter (3.3V/50mA)

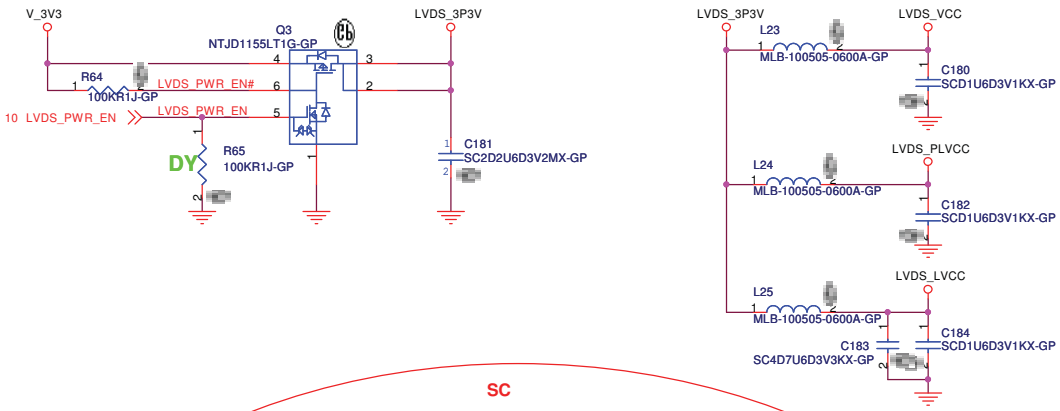

SC

Change to THC63LVDM83R-GP

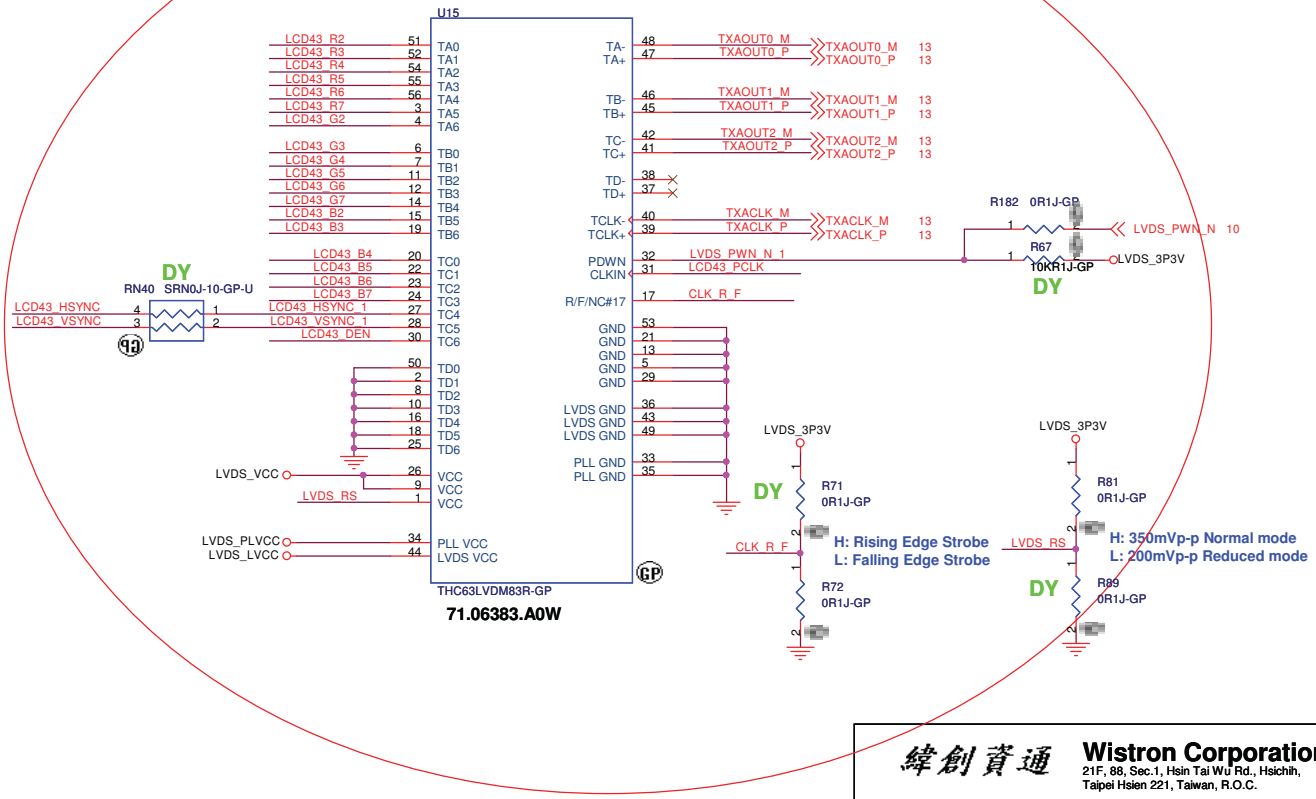

緯創資通 Wistron Corporation
21F, 88, Sec.1, Hsin Tai Wu Rd., Hsichih,
Taipei Hsien 221, Taiwan, R.O.C.

Title	LVDS Transmitter	
Size A3	Document Number T-Note	Rev SC
Date: Tuesday, June 30, 2009	Sheet 12 of 34	

http://hobi-elektronika.net

LCD/Camera Connector

3.3V for LCD Panel (3.3V/210mA)

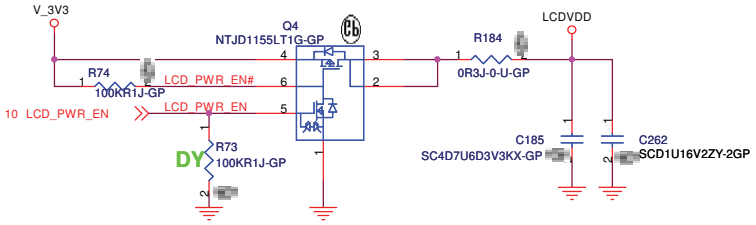

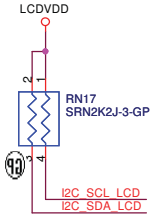

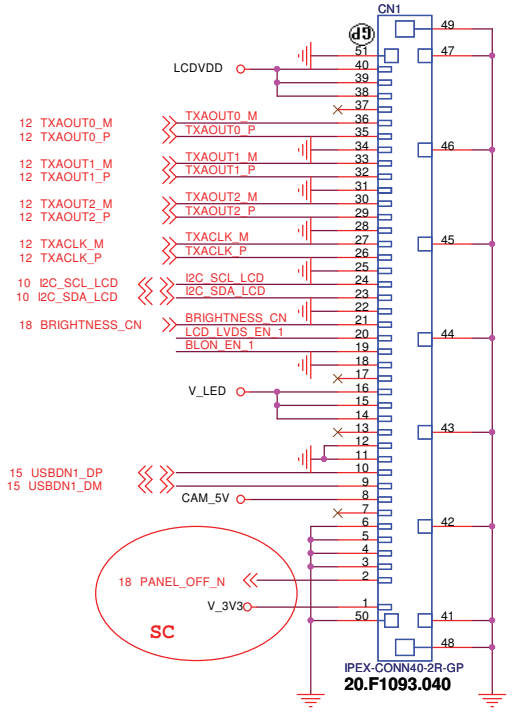

DCBATOUT for LCD Backlight (6V~12V/333mA~167mA)

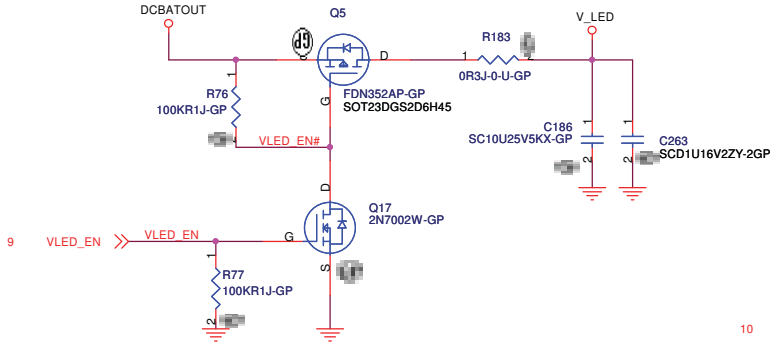

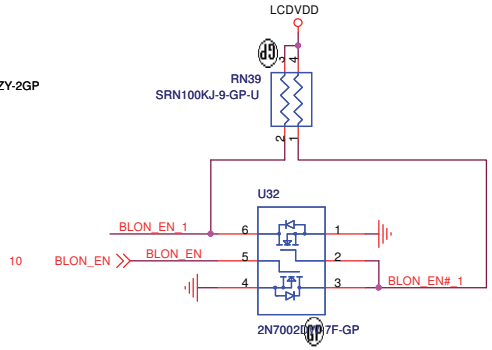

5V for Camera (5V/50mA)

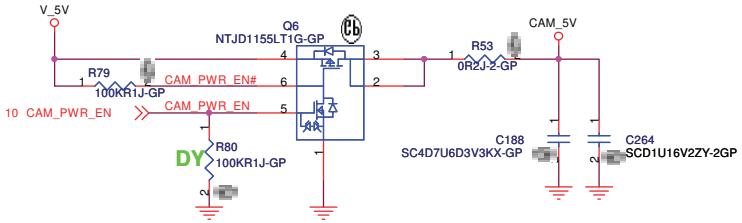

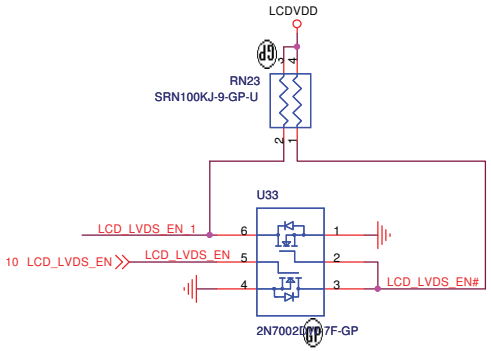

緯創資通	**Wistron Corporation** 21F, 88, Sec.1, Hsin Tai Wu Rd., Hsichih, Taipei Hsien 221, Taiwan, R.O.C.	
Title	LCD, Camera	
Size A3	Document Number **T-Note**	Rev SC
Date: Saturday, July 04, 2009	Sheet 13 of 34	

http://hobi-elektronika.net

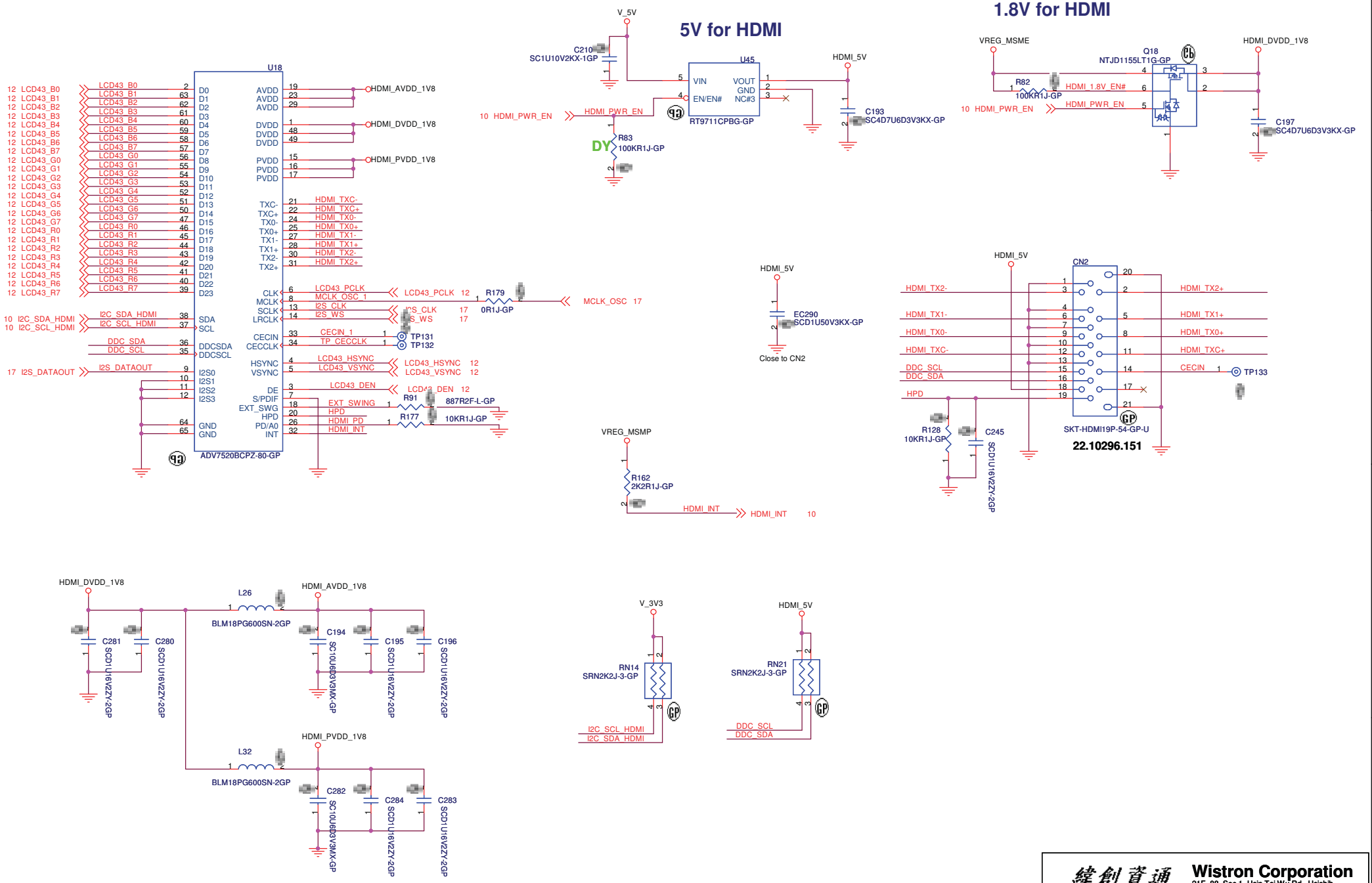

緯創資通	**Wistron Corporation** 21F, 88, Sec.1, Hsin Tai Wu Rd., Hsichih, Taipei Hsien 221, Taiwan, R.O.C.
Title	HDMI
Size A3	Document Number T-Note
Rev	SC
Date: Thursday, July 02, 2009	Sheet 14 of 34

http://hobi-elektronika.net

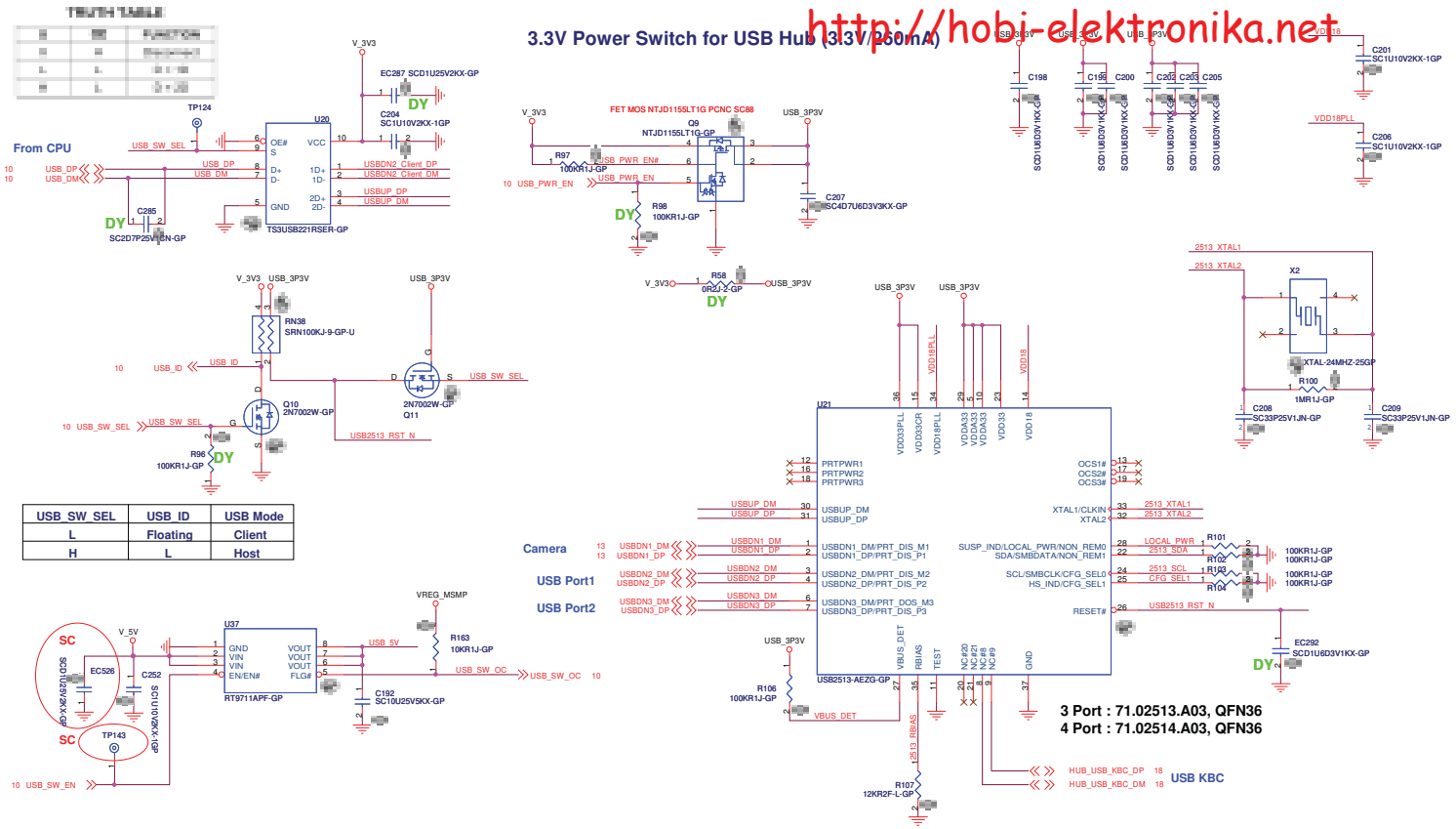

USB_SW_SEL	USB_ID	USB Mode
L	Floating	Client
H	L	Host

USB Host and Client

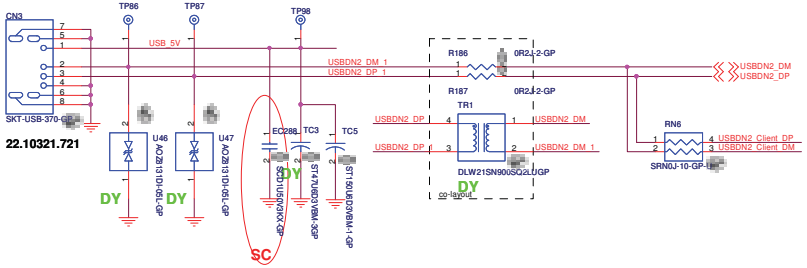

USB Host Only

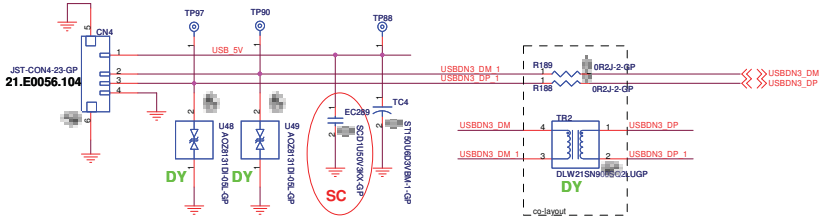

緯創資通 Wistron Corporation
21F, 88, Sec.1, Hsin Tai Wu Rd., Hsichih,
Taipei Hsien 221, Taiwan, R.O.C.

Title: USB Hub

Size: A2 | Document Number: T-Note | Rev: SC

Date: Tuesday, June 30, 2009 | Sheet 15 of 34

http://hobi-elektronika.net

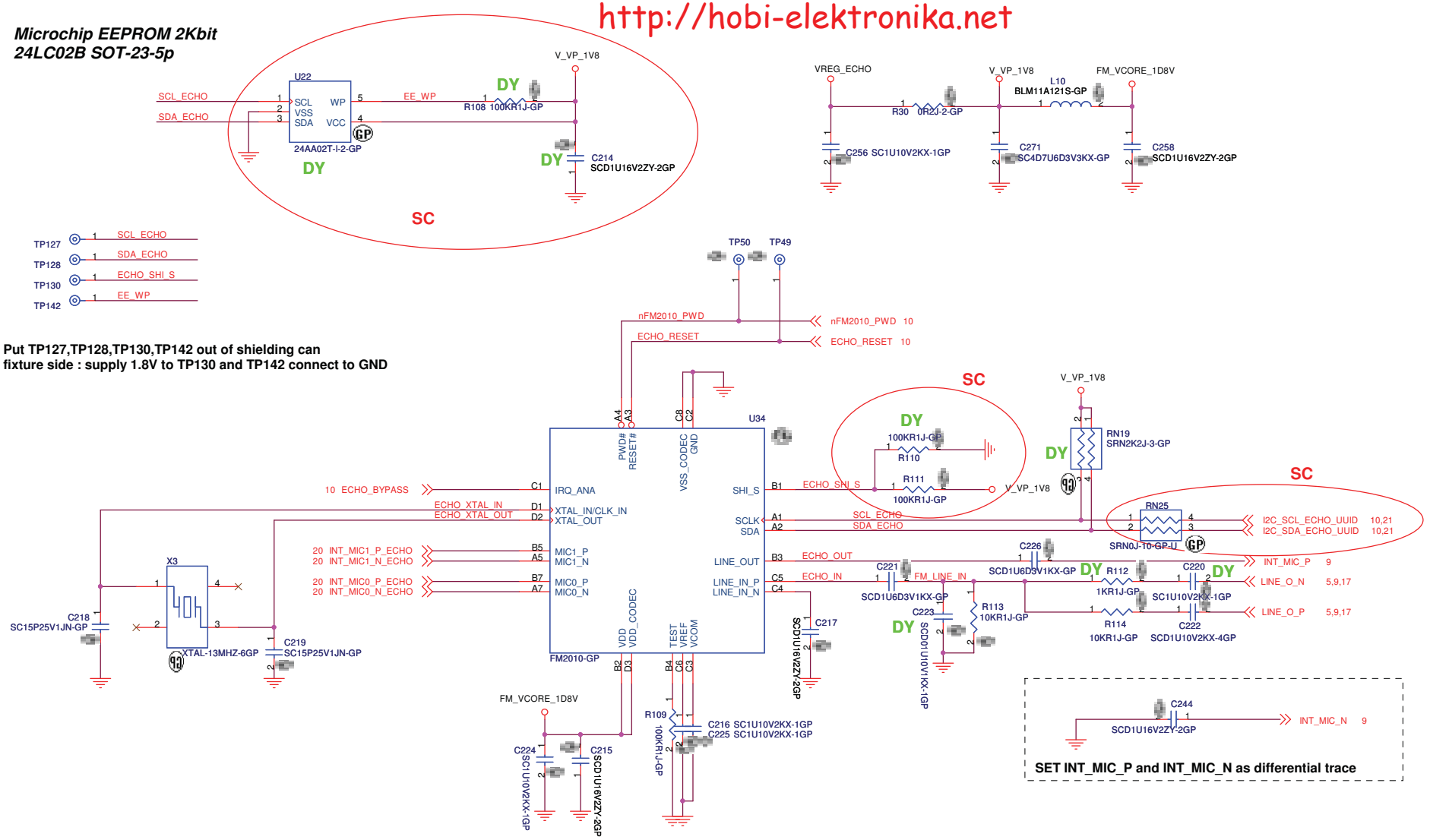

SHI_S --> Low for EEPROM
--> HI for I2C

TEST == Low(normal mode, not test mode)
RESET == High(no reset held low)
PWD == High(normal mode,not power down)
IRQ_ANA == Low(normal mode, not bypass)

緯創資通 **Wistron Corporation**
21F, 88, Sec.1, Hsin Tai Wu Rd., Hsichih,
Taipei Hsien 221, Taiwan, R.O.C.

Title	Echo/Noise Cancellation
Size A3	Document Number T-Note
Rev	SC
Date: Tuesday, June 30, 2009	Sheet 16 of 34

http://hobi-elektronika.net

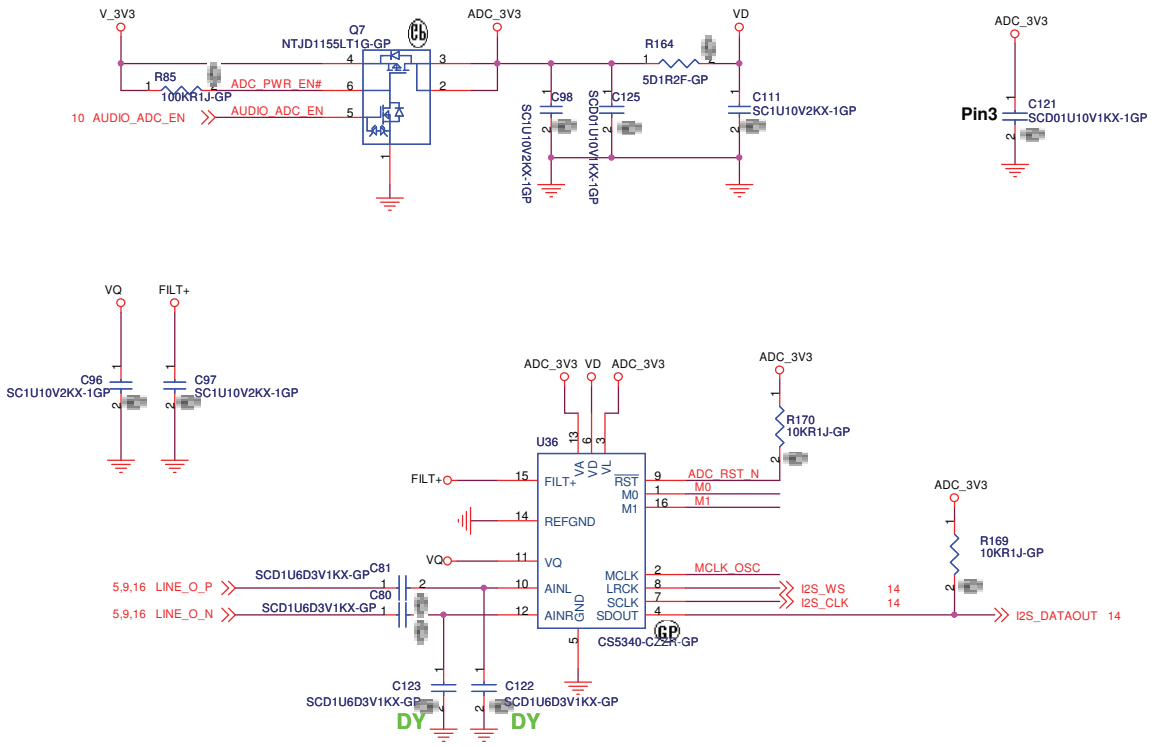

M1	M0	
0	0	48KHz Master mode
0	1	96KHz Master mode
1	0	192KHz Master mode
1	1	Auto detect speed Slave mode

緯創資通 **Wistron Corporation**
21F, 88, Sec.1, Hsin Tai Wu Rd., Hsichih,
Taipei Hsien 221, Taiwan, R.O.C.

Title	Audio ADC	
Size A3	Document Number T-note	Rev SC
Date: Tuesday, June 30, 2009	Sheet 17 of 34	

http://hobi-elektronika.net

3.3V for KBC

AUX_3V3 — PG2 (GAP-CLOSE-PWR-2U) — KBC_3P3V
C115 SC1U10V2KX-1GP
R66 0R0201-PAD-GP — KBC_3P3V_D
C90 SC10U6D3V3MX-GP
C112 SCD1U6D3V1KX-GP
R70 0R0201-PAD-GP — KBC_3P3V_A
C87 SC10U6D3V3MX-GP
C82 SCD1U6D3V1KX-GP

DY
AUX_3V3 — R201 0R1J-GP
V_3V3 — R206 0R1J-GP

KB_3V3
RN31 SRN10KJ-10-GP-U: KBROW1, KBROW2, KBROW3, KBROW4
RN30 SRN10KJ-10-GP-U: KBROW5, KBROW6, KBROW7, KBROW8
RN28 SRN10KJ-10-GP-U: KBCOL1, KBCOL2, KBCOL3, KBCOL4
RN27 SRN10KJ-10-GP-U: KBCOL5, KBCOL6, KBCOL7, KBCOL8
RN26 SRN10KJ-10-GP-U: KBCOL9, KBCOL10, KBCOL11, KBCOL12
RN33 SRN10KJ-10-GP-U: KBCOL13, KBCOL14, KBCOL15, KBCOL16

SC

KBROW1 TP15, KBROW2 TP17, KBROW3 TP18, KBROW4 TP20
KBROW5 TP28, KBROW6 TP25, KBROW7 TP26, KBROW8 TP27
KBCOL1 TP51, KBCOL2 TP29, KBCOL3 TP41, KBCOL4 TP47
KBCOL5 TP74, KBCOL6 TP57, KBCOL7 TP62, KBCOL8 TP66
KBCOL9 TP78, KBCOL10 TP75, KBCOL11 TP76, KBCOL12 TP77
KBCOL13 TP145, KBCOL14 TP85, KBCOL15 TP111, KBCOL16 TP121

SC

Keyboard Connector

Keyboard — ACES-CON24-7-GP CN5
KBROW2, KBROW8, KBROW7, KBCOL10, KBROW5, KBROW6, KBCOL1, KBROW3, KBROW4, KBCOL6, KBCOL2, KBROW1, KBCOL3, KBCOL5, KBCOL8, KBCOL9, KBCOL7, KBCOL4, KBCOL13, KBCOL14, KBCOL15, KBCOL12, KBCOL11, KBCOL16

20.K0320.024

KBC_3P3V
RN35 SRN2K2J-3-GP: I2C_SCL_KBC, I2C_SDA_KBC
RN34 SRN2K2J-3-GP: I2C_SCL_BAT, I2C_SDA_BAT

V_5V — R25 100R2J-2-GP — LED1 LED-W-38-GP — CAPS_LED

83.19217.I70

U17 EPF011J-GP-U1

KBC_3P3V_D, KBC_3P3V_A — VDD, VDDA, VREFH
KBCOL1, KBCOL2, KBCOL3, KBCOL4, KBCOL5, KBCOL6, KBCOL7, KBCOL8 — P0_0, P0_1, P0_2, P0_3, P0_4, P0_5, P0_6, P0_7
KBROW1, KBROW2, KBROW3, KBROW4, KBROW5, KBROW6, KBROW7, KBROW8 — P1_0, P1_1, P1_2, P1_3, P1_4, P1_5, P1_6, P1_7
P3_0, P3_1, P3_4, P3_5
P4_0, P4_1, P4_2, P4_3, P4_6, P4_7
SPI_DI, SPI_DO, SPI_CLK
OP_MODE
VSS, VSS, VSSA
P5_0, P5_1, P5_2, P5_3, P5_4, P5_5, P5_6, P5_7 — KBCOL9, KBCOL10, KBCOL11, KBCOL12, KBCOL13, KBCOL14, KBCOL15, KBCOL16
P7_0, P7_1, P7_2, P7_3, P7_4/CIR — KBC_RXD, KBC_TXD, CAPS_LED_1
P8_0, P8_1, P8_2, P8_3 — DCDC_ON, AD_OFF, PHONE_ON_N, BRIGHTNESS_CN
ADC_0, ADC_1, ADC_2, ADC_3 — AD_IA, KB_INT, BATT_INT
PS2A_CLK, PS2A_DAT — PS2_CLK, PS2_DATA
X_IN, X_OUT — XI, XO
DP, DM — USB_KBC_DP, USB_KBC_DM
RST# — KBC_RST_N
VSS, VSS, VSSA

10 I2C_SCL_KBC, 10 I2C_SDA_KBC, 23 I2C_SCL_BAT, 23 I2C_SDA_BAT
23 BATT_IN, 23 AC_IN#, 23 CHG_ON#, 23 PWR_BTN_N, 13 PANEL_OFF_N

KBC_3P3V — R68 10KR1J-GP — OP_MODE
DY
R75 10KR1J-GP

KBC_3P3V — R92 10KR1J-GP — KBC_RST_N
C127 SCD1U6D3V1KX-GP

DY
RN36 SRN0J-10-GP: 3 PMIC_USB_KBC_DP, 3 PMIC_USB_KBC_DM — USB_KBC_DP, USB_KBC_DM
RN37 SRN0J-10-GP: 15 HUB_USB_KBC_DP, 15 HUB_USB_KBC_DM

DCDC_ON — R99 10KR1J-GP
KBC_3P3V — DY R24 100KR1J-GP — PHONE_ON_N

SC
DCDC_ON, KBC_RST_N — D3 BAS40DCW-GP — T8_HW_SHUT_N 9

PWR_LED 23 — Q14 2N7002W-GP — PWR_LED_1
KBC_3P3V — DY R69 100KR1J-GP — CAPS_LED — Q19 2N7002W-GP — CAPS_LED_1

MSM_UART2DM_RXD — 10 USB_FS2_DAT
MSM_UART2DM_TXD — 10 USB_FS2_SE0
DY RN41 SRN0J-10-GP: KBC_TXD, KBC_RXD

TouchPad Connector

V_5V, V_5V
SC
RN10 SRN10KJ-11-GP-U
C190 SC1U10V2KX-1GP
C18 SC1U10V2KX-1GP
EC524 SCD1U25V2KX-GP
CN14 PTWO-CON4-4-GP: PS2_CLK, PS2_DATA
C189 SC33P25V1JN-GP
C191 SC33P25V1JN-GP

TP138 PS2_CLK, TP139 PS2_DATA, TP140 V_5V, TP141

Put TP138,139,140,141 out of shielding can

20.K0322.004

Test PAD for Debugging

DY
KBC_3P3V — RN29 SRN2K2J-3-GP
KBC_3P3V — OP_MODE TP22, KBC_RXD TP10, KBC_TXD TP14, TP19, TP21

Put TP14,TP19,TP10, out of shielding can

R31 10MR2J-L-GP — XI, XO
X4 XTAL-24MHZ-25GP
C25 SC15P50V2JN-2-GP
C88 SC15P50V2JN-2-GP

緯創資通	**Wistron Corporation** 21F, 88, Sec.1, Hsin Tai Wu Rd., Hsichih, Taipei Hsien 221, Taiwan, R.O.C.
Title	KBC, Keyboard con.,T/P
Size A3	Document Number **T-Note**
Rev	SC
Date: Tuesday, June 30, 2009	Sheet 18 of 34

VCTCXO CTL

http://hobi-elektronika.net

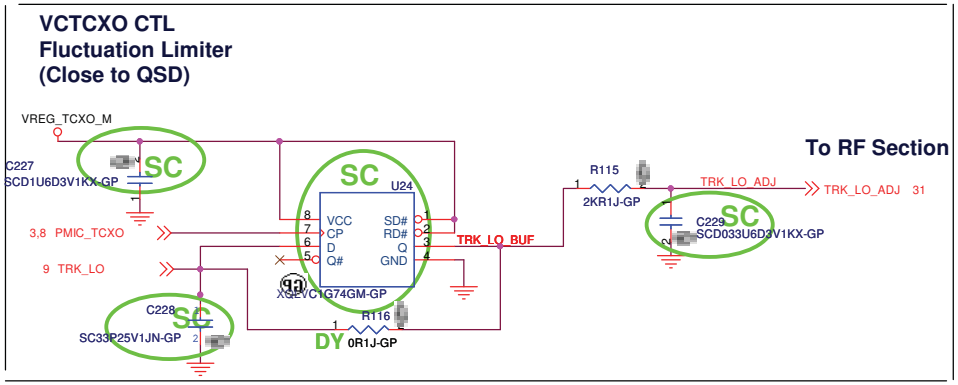

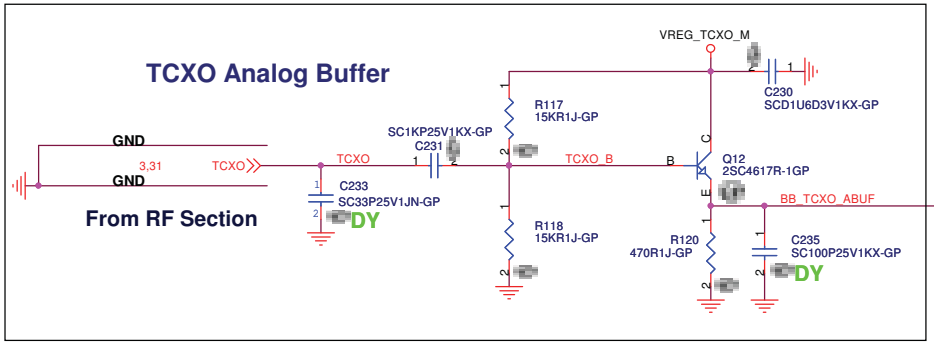

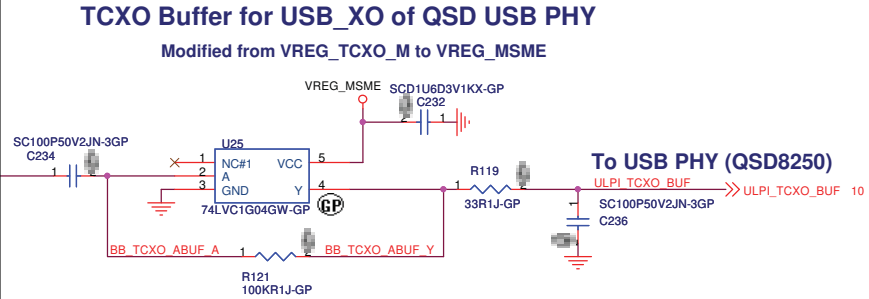

緯創資通 **Wistron Corporation**
21F, 88, Sec.1, Hsin Tai Wu Rd., Hsichih,
Taipei Hsien 221, Taiwan, R.O.C.

Title	TCXO Buffer	
Size A3	Document Number T-note	Rev SC
Date: Tuesday, June 30, 2009	Sheet 19 of 34	

http://hobi-elektronika.net

External Microphone/Headphone

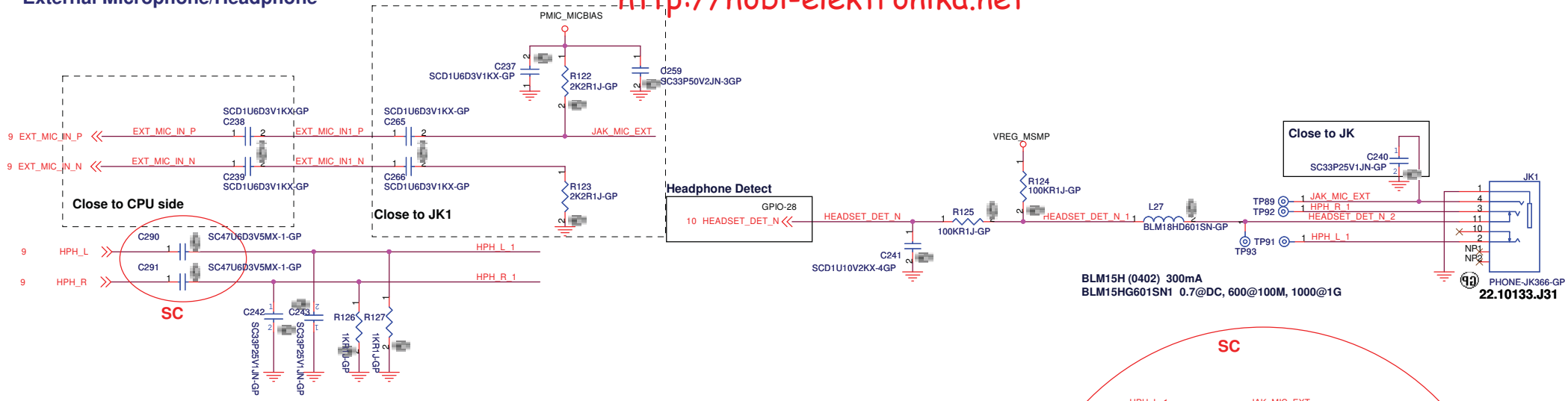

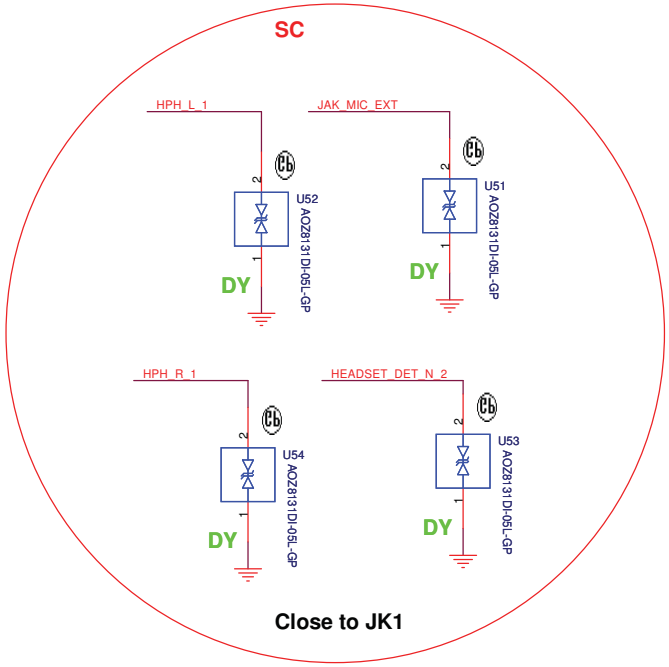

Internal Microphone

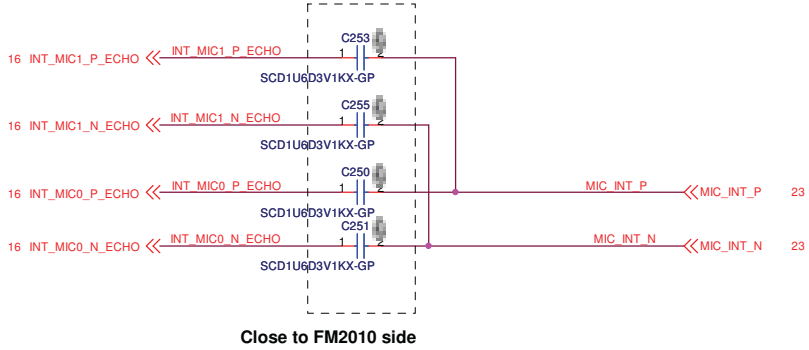

緯創資通	**Wistron Corporation** 21F, 88, Sec.1, Hsin Tai Wu Rd., Hsichih, Taipei Hsien 221, Taiwan, R.O.C.	
Title	Ext Mic, Int Mic, HP	
Size A3	Document Number T-note	Rev SC
Date: Tuesday, June 30, 2009	Sheet 20 of 34	

http://hobi-elektronika.net

JTAG

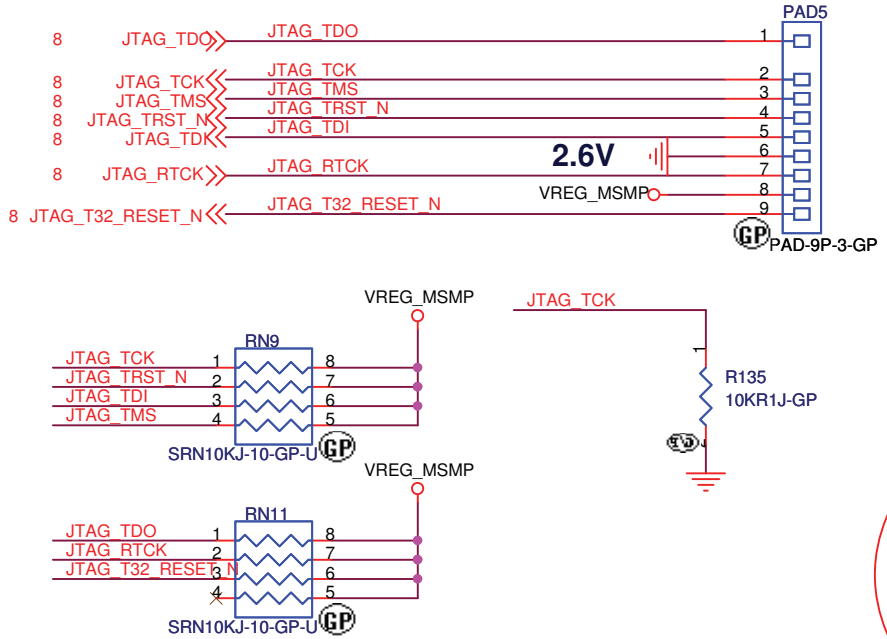

UART-3

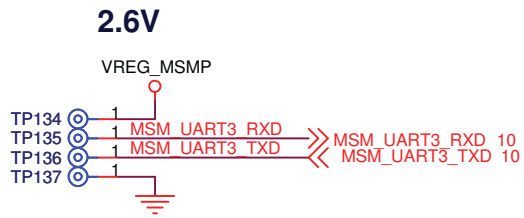

Put TP134,TP135,TP136,TP137 out of shielding can

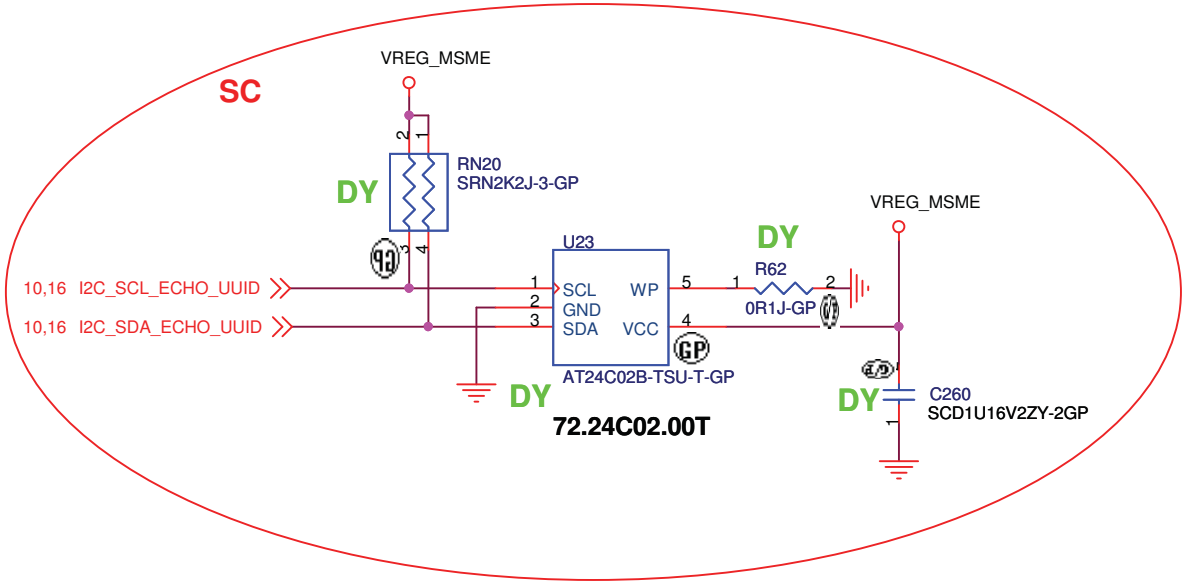

緯創資通 Wistron Corporation
21F, 88, Sec.1, Hsin Tai Wu Rd., Hsichih,
Taipei Hsien 221, Taiwan, R.O.C.

Title	Debug Port	
Size A4	Document Number T-Note	Rev SC
Date: Tuesday, June 30, 2009	Sheet 21 of 34	

http://hobi-elektronika.net

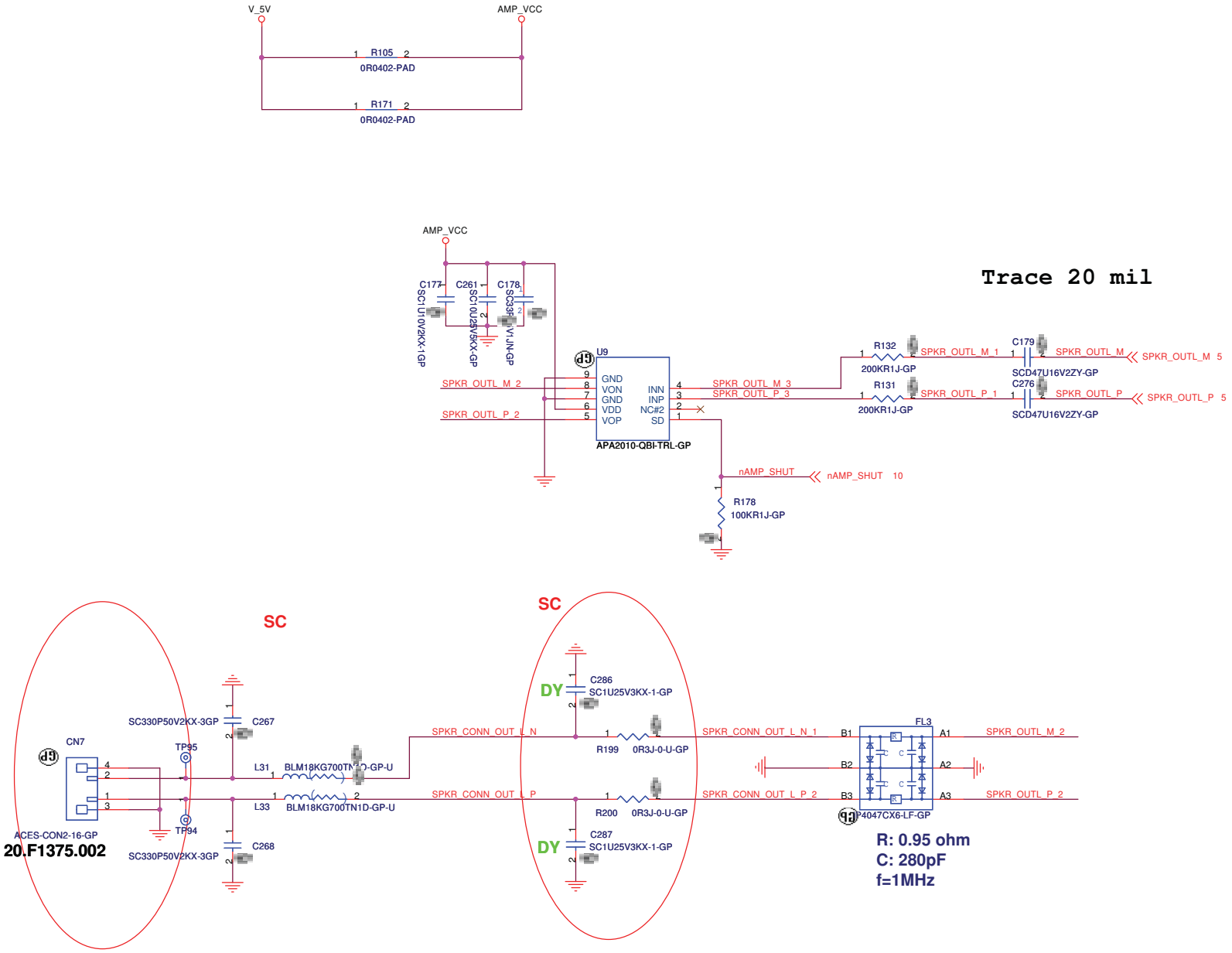

緯創資通	**Wistron Corporation** 21F, 88, Sec.1, Hsin Tai Wu Rd., Hsichih, Taipei Hsien 221, Taiwan, R.O.C.	
Title	SKP AMP	
Size A3	Document Number T-Note	Rev SC
Date: Monday, July 06, 2009	Sheet 22 of 34	

http://hobi-elektronika.net

BTB Connector: IO Board <-> MB Board

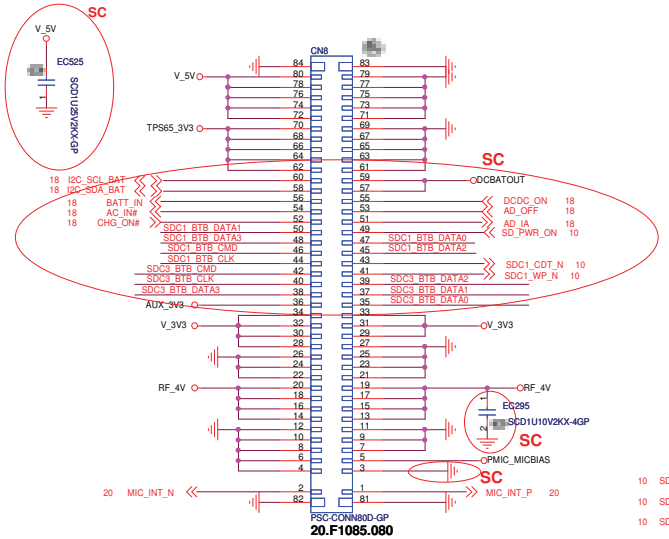

FPC Connector: Flash Board <-> MB Board

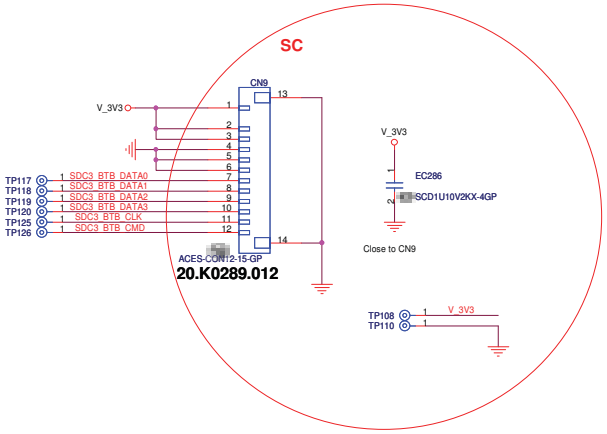

FPC Connector: SIM Board <-> MB Board

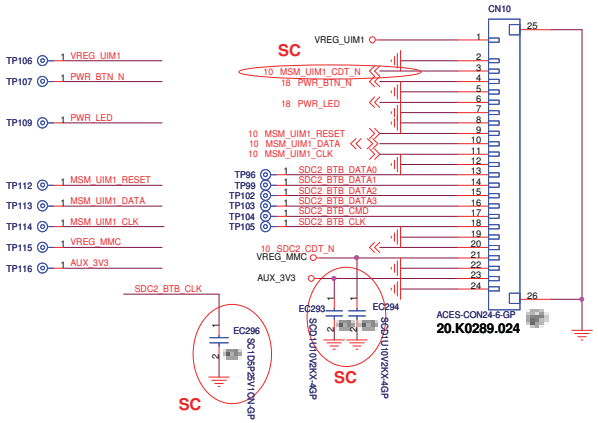

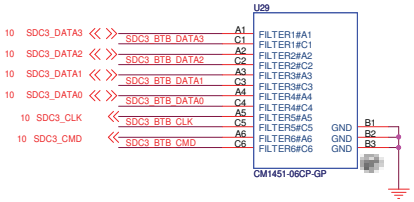

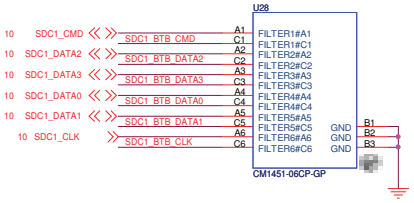

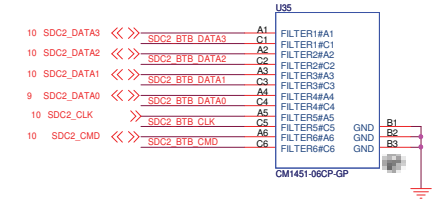

Shielding Can

Screw Hole

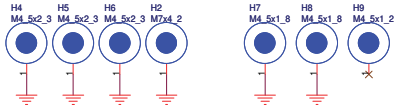

H9:34.13X03.001

Shielding Can

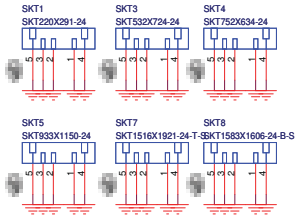

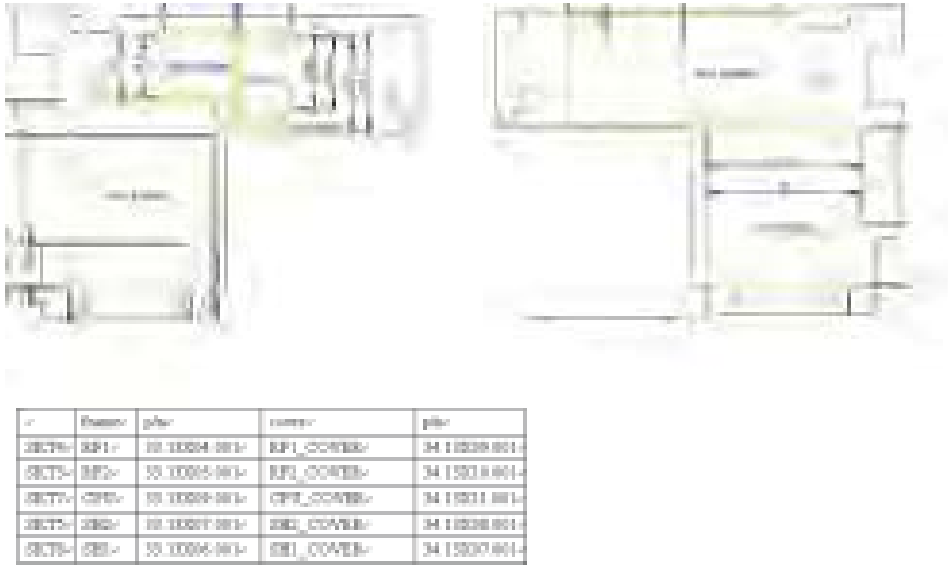

[illegible]	[illegible]	[illegible]	[illegible]	[illegible]
[illegible]	[illegible]	[illegible]	[illegible]	[illegible]
[illegible]	[illegible]	[illegible]	[illegible]	[illegible]
[illegible]	[illegible]	[illegible]	[illegible]	[illegible]
[illegible]	[illegible]	[illegible]	[illegible]	[illegible]

緯創資通 **Wistron Corporation**
21F, 88, Sec.1, Hsin Tai Wu Rd., Hsichih,
Taipei Hsien 221, Taiwan, R.O.C.

Title	BTB,FPC, Shielding Can	
Size C	Document Number T-note	Rev SC
Date: Tuesday, June 30, 2009	Sheet 23 of 34	

RF Interface (MXU)

http://hobi-elektronika.net

RX0 IQ

9,31 RX0_I_P_MSM → RX0_I_P_MSM
9,31 RX0_I_M_MSM → RX0_I_M_MSM

RX0 IQ
To QSD RF RX
(Analog)

RX0 IQ
To QSD RF RX
(Analog)

9,31 RX0_Q_P_MSM → RX0_Q_P_MSM
9,31 RX0_Q_M_MSM → RX0_Q_M_MSM

SSBI

GPIO-59 — SSBDT_MXU — SSBDT_MXU 10,31

ANT SEL

GRFC_9 GPIO-72 — ANT_SEL3 — ANT_SEL3 10,33
GRFC_8 GPIO-73 — ANT_SEL2 — ANT_SEL2 10,33
GRFC_7 GPIO-74 — ANT_SEL1 — ANT_SEL1 10,33
GRFC_6 GPIO-75 — ANT_SEL0 — ANT_SEL0 10,33

GPIO-30 — DRX_MODE_SELECT_A — DRX_MODE_SELECT_A 10,33
GPIO-23 — DRX_MODE_SELECT_B — DRX_MODE_SELECT_B 10,33
GPIO-82 — DRX_MODE_SELECT_C — DRX_MODE_SELECT_C 10,33

PA CTRL

N5 — TX_ON — TX_ON 9,31

T11 MPM-GPIO[0] — PA_R0, PA_R1 — PA_R0 9,28,29,30; PA_R1 8,28,29,30

P9 GPIO-83 GPIO-110 — PA_ON_0, PA_ON_1, PA_ON2 — PA_ON_0 9,29; PA_ON_1 10,30; PA_ON2 10,31

9,30 PA_PWR_CTL_P → PA_PWR_CTL_P

GRFC2 GPIO-79 — GSM_PA_EN — GSM_PA_EN 10,30
GRFC1 GPIO-80 — GSM_PA_BAND — GSM_PA_BAND 10,30

RF CTRL

GPIO-81 — INTER_RX_SW_SEL_1 — INTER_RX_SW_SEL_1 10,31

GPIO-16 — INTER_TX_SW_SEL_1 — INTER_TX_SW_SEL_1 10,31
GPIO-26 — INTER_TX_SW_SEL_2 — INTER_TX_SW_SEL_2 10,28,31

GRFC3 GPIO-78 **(N/A)** INTER_RX_SW_SEL_2

GPS

GPIO-109 — EXT_GPS_LNA_EN — EXT_GPS_LNA_EN 10,33

RX1 IQ

9,31 RX1_I_P_MSM → RX1_I_P_MSM
9,31 RX1_I_M_MSM → RX1_I_M_MSM

RX1 IQ
To QSD RF RX
(Analog)

RX1 IQ
To QSD RF RX
(Analog)

9,31 RX1_Q_P_MSM → RX1_Q_P_MSM
9,31 RX1_Q_M_MSM → RX1_Q_M_MSM

TX IQ

TX_Q_P, TX_Q_M → TX_Q_P 9,31; TX_Q_M 9,31
TX_I_P, TX_I_M → TX_I_P 9,31; TX_I_M 9,31
TX_IREF → TX_IREF 9,31

TX IQ
From QSD TXDAC
(Analog)

VCTCXO

VCTCXO ADJ

TRK_LO_ADJ → TRK_LO_ADJ 19,31

3,19,31 TCXO → TCXO — TCXO — RF_TCXO_GND

Covered by GND traces and planes

緯創資通 **Wistron Corporation**
21F, 88, Sec.1, Hsin Tai Wu Rd., Hsichih,
Taipei Hsien 221, Taiwan, R.O.C.

Title	BB/RF Interface	
Size C	Document Number T-note	Rev SC
Date: Tuesday, June 30, 2009	Sheet 24 of 34	

http://hobi-elektronika.net

緯創資通 **Wistron Corporation**
21F, 88, Sec.1, Hsin Tai Wu Rd., Hsichih,
Taipei Hsien 221, Taiwan, R.O.C.

Title	VERSION SHEET	
Size C	Document Number T-note	Rev SC
Date: Tuesday, June 30, 2009	Sheet 25 of 34	

http://hobi-elektronika.net

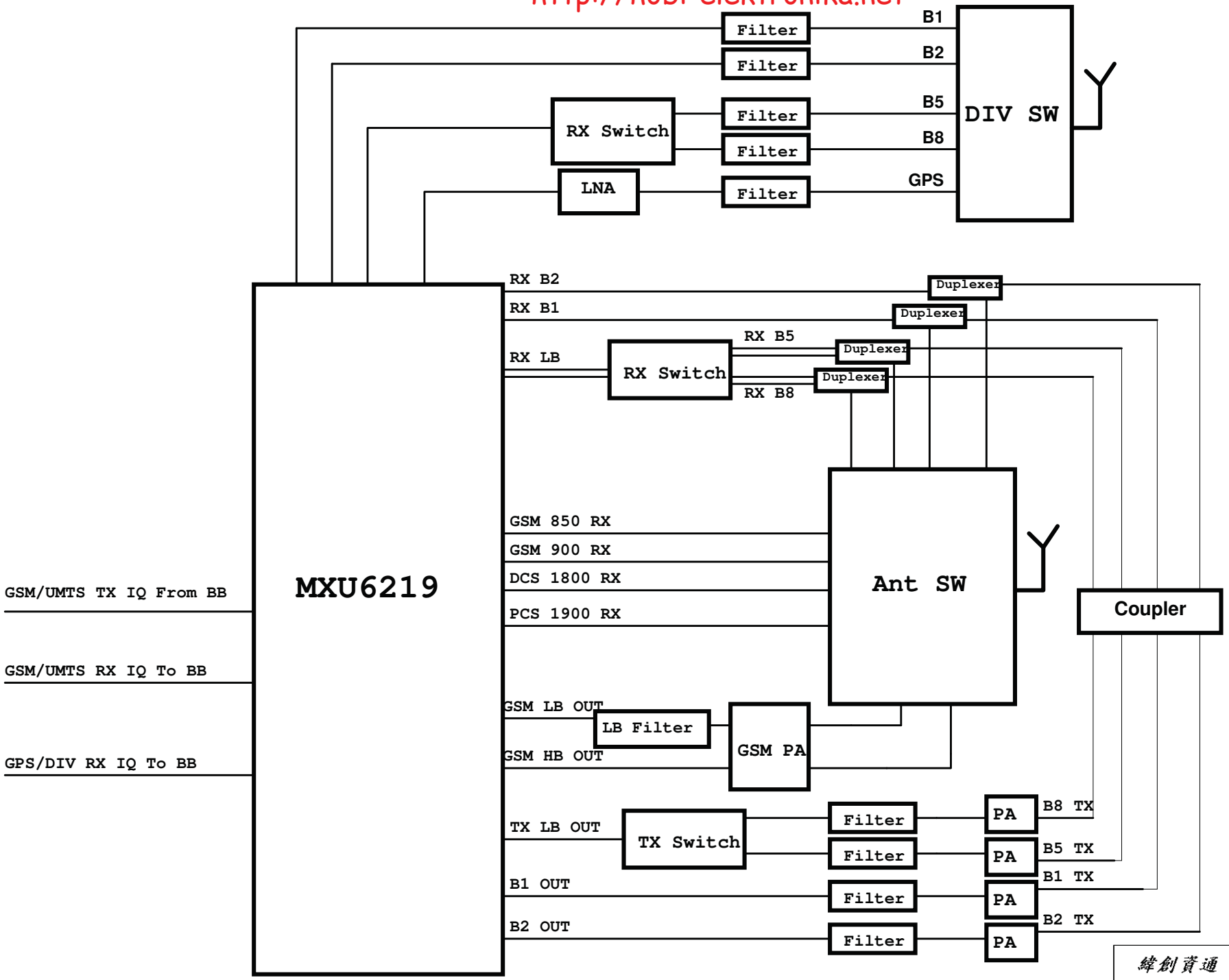

緯創資通 Wistron Corporation
21F, 88, Sec.1, Hsin Tai Wu Rd., Hsichih,
Taipei Hsien 221, Taiwan, R.O.C.

Title	RF BLOCK DIAGRAM	
Size C	Document Number T-note	Rev SC
Date: Tuesday, June 30, 2009	Sheet 26 of 34	

http://hobi-elektronika.net

POWER DIAGRAM

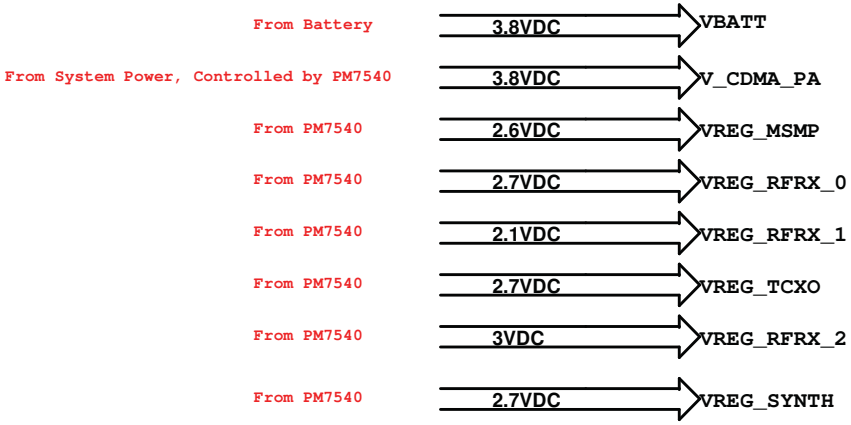

VBATT for GSM AP

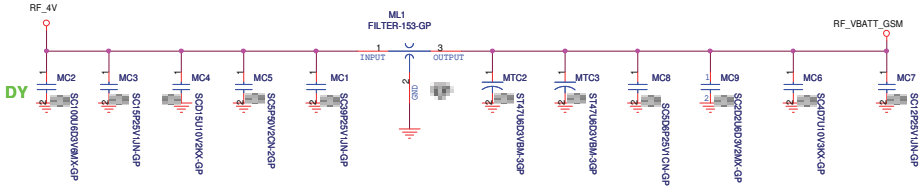

+2.1VDC

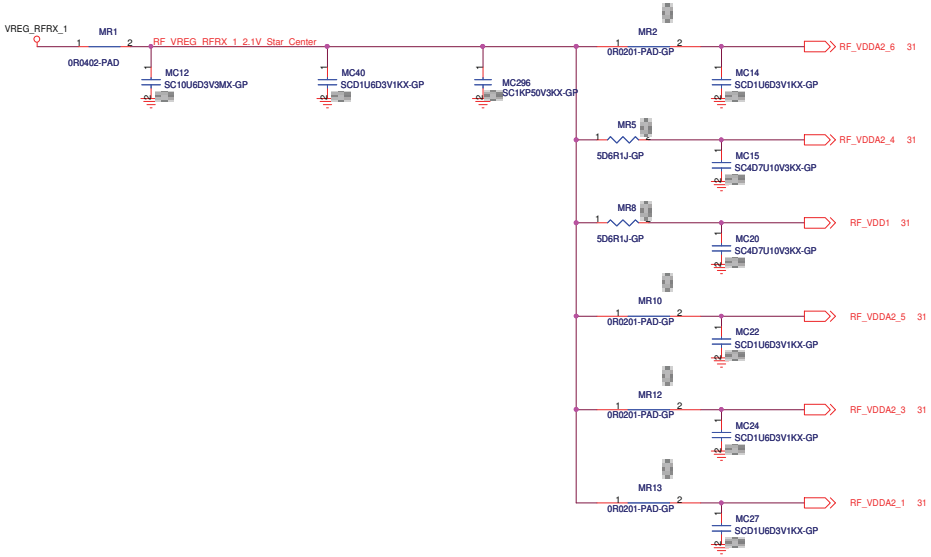

VREG_TCXO_M

+2.6VDC

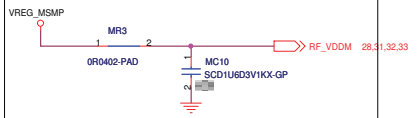

V_CDMA_PA

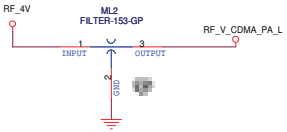

+2.7VDC

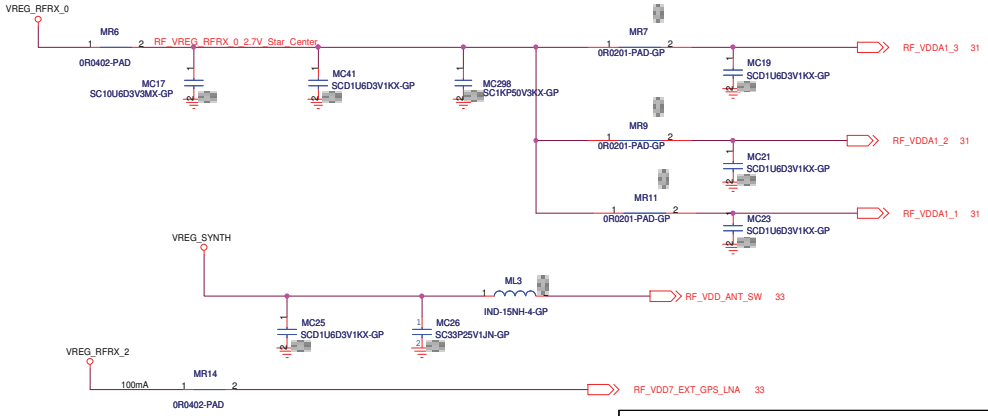

緯創資通 **Wistron Corporation**
21F, 88, Sec.1, Hsin Tai Wu Rd., Hsichih,
Taipei Hsien 221, Taiwan, R.O.C.

Title	RF POWER DISTRIBUTION	
Size C	Document Number T-note	Rev SC
Date: Tuesday, June 30, 2009	Sheet 27 of 34	

http://hobi-elektronika.net

UMTS PA/TX CHAIN FOR B8 (BC8)

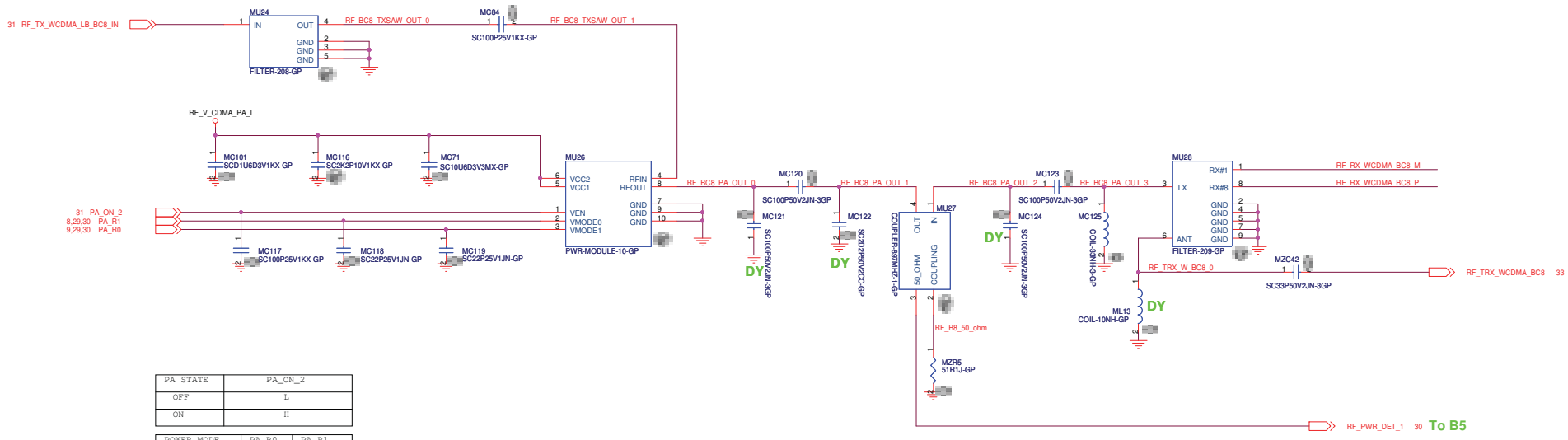

PA STATE	PA_ON_2
OFF	L
ON	H

POWER MODE	PA_R0	PA_R1
LOW POWER	H	H
MEDIUM POWER	L	H
HIGH POWER	L	L

RX INTERSTAGE CHAIN

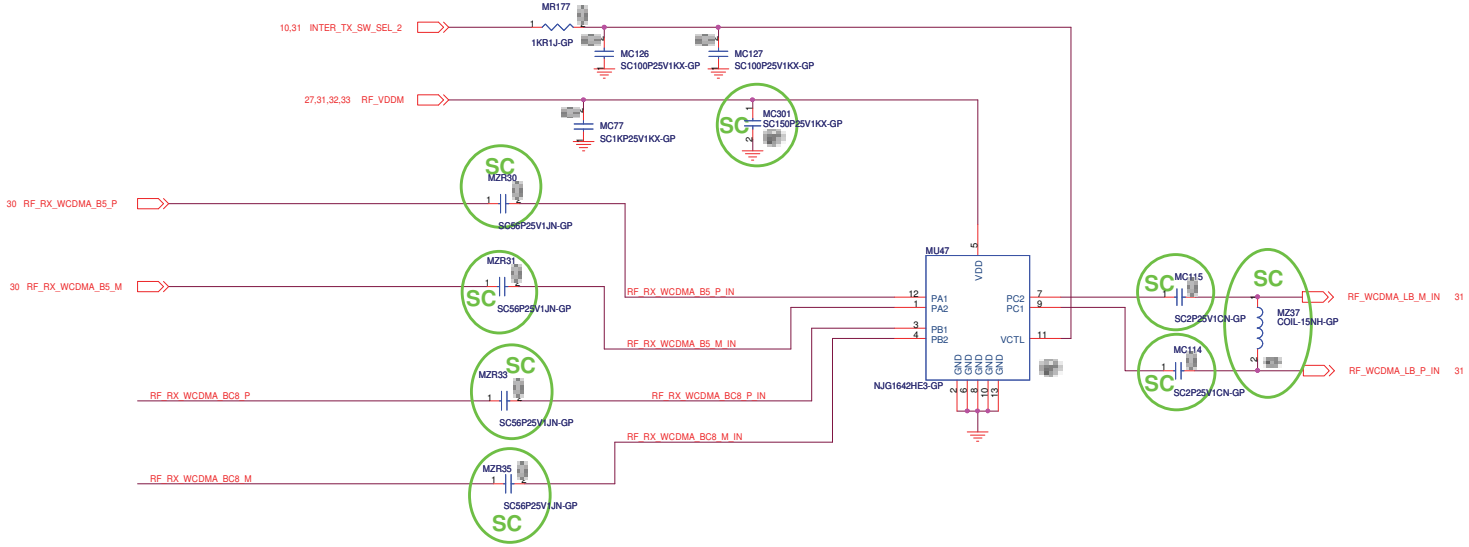

RX MODE	INTER_TX_SW_SEL_2
B5	H
BC8	L

緯創資通 **Wistron Corporation**
21F, 88, Sec.1, Hsin Tai Wu Rd., Hsichih,
Taipei Hsien 221, Taiwan, R.O.C.

Title: WCDMA B8 & RX CHAIN

Size: C | Document Number: T-note | Rev: SC

Date: Tuesday, June 30, 2009 | Sheet 28 of 34

http://hobi-elektronika.net

WCDMA PA/TX CHAIN FOR HB SE2 (B1)

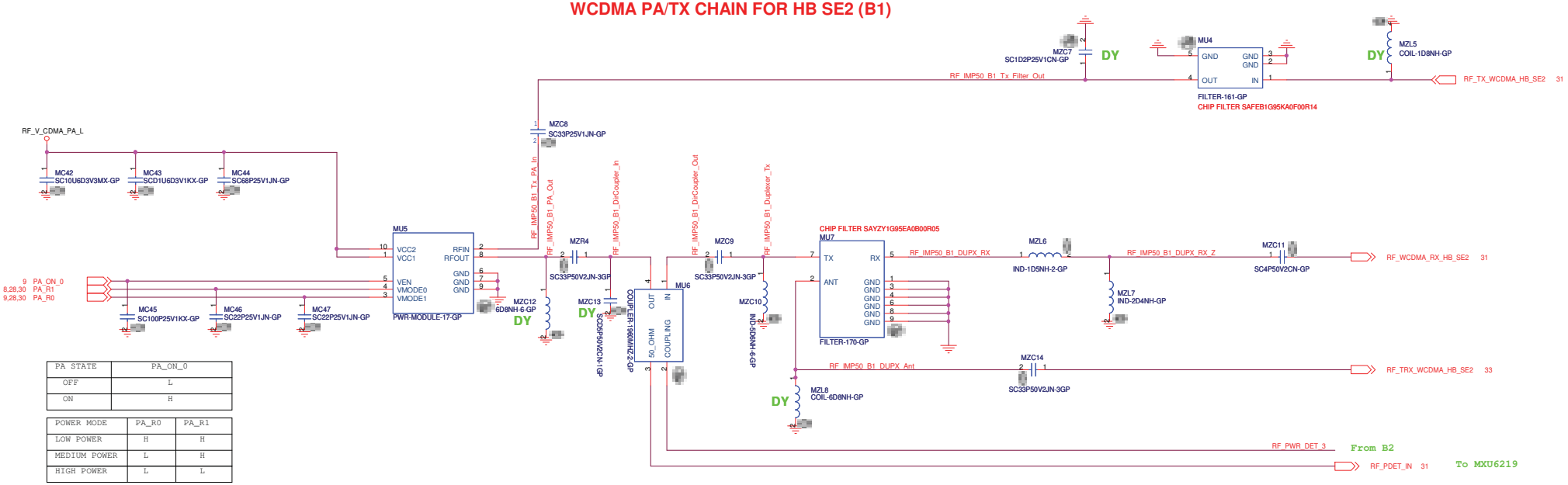

PA STATE	PA_ON_0
OFF	L
ON	H

POWER MODE	PA_R0	PA_R1
LOW POWER	H	H
MEDIUM POWER	L	H
HIGH POWER	L	L

WCDMA PA/TX CHAIN FOR HB SE1 (B2)

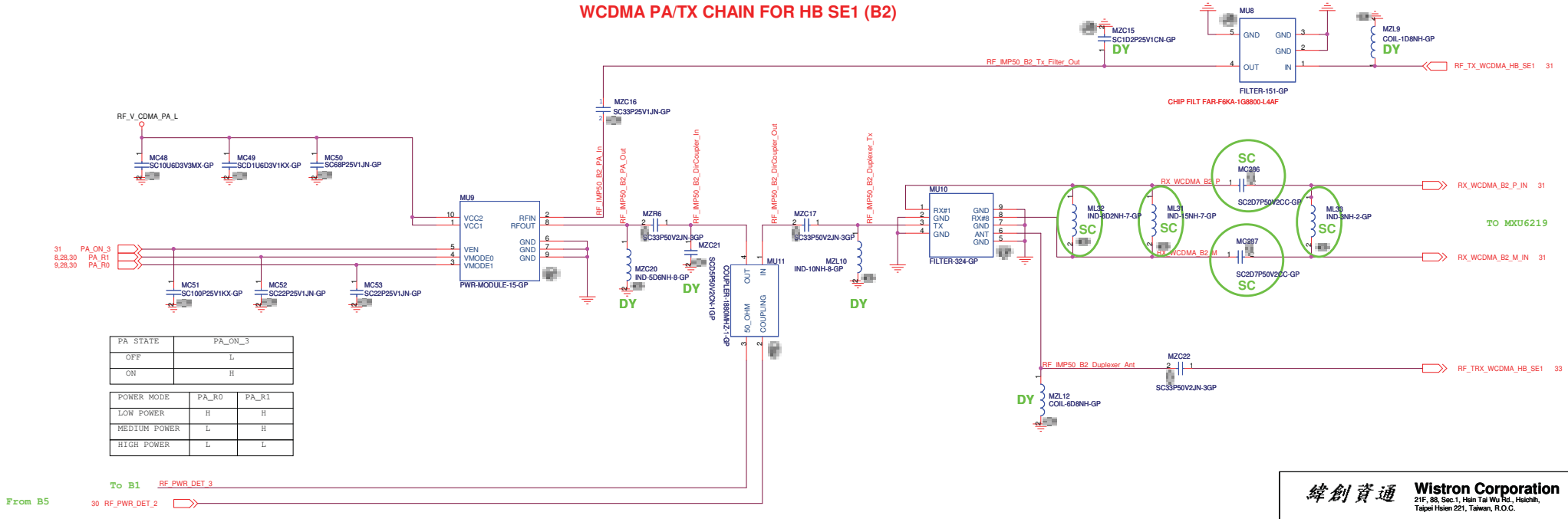

PA STATE	PA_ON_3
OFF	L
ON	H

POWER MODE	PA_R0	PA_R1
LOW POWER	H	H
MEDIUM POWER	L	H
HIGH POWER	L	L

緯創資通 **Wistron Corporation**
21F, 88, Sec.1, Hsin Tai Wu Rd., Hsichih,
Taipei Hsien 221, Taiwan, R.O.C.

Title: WCDMA B1/2 PAs & DUPLEXERs

Size	Document Number	Rev
C	T-note	SC

Date: Tuesday, June 30, 2009 Sheet 29 of 34

http://nobi-elektronika.net

WCDMA 800 (B5/6) LPA/TX CHAIN

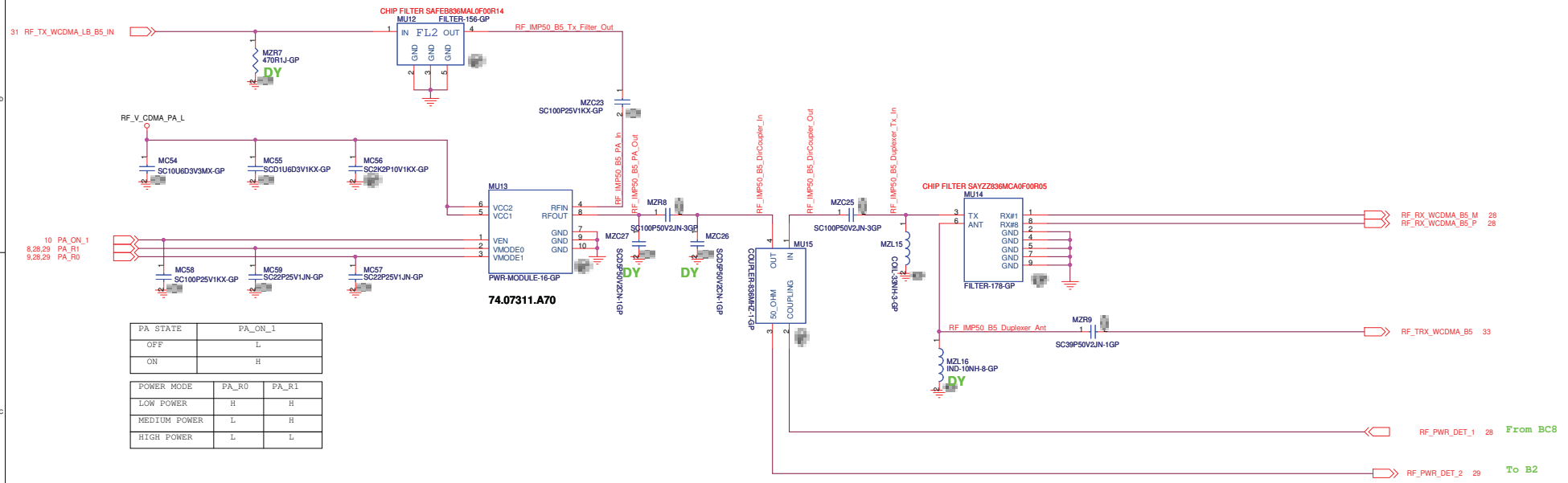

PA STATE	PA_ON_1
OFF	L
ON	H

POWER MODE	PA_R0	PA_R1
LOW POWER	H	H
MEDIUM POWER	L	H
HIGH POWER	L	L

GSM QUAD-BAND PA

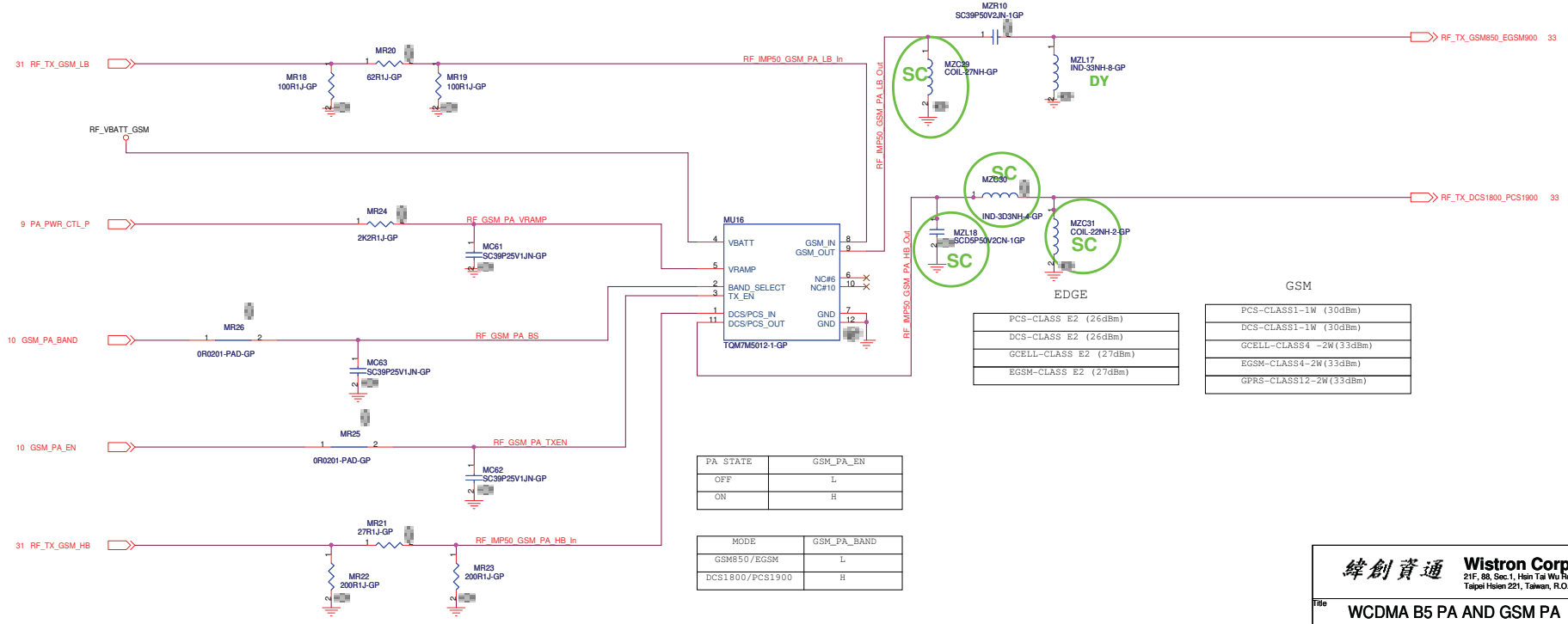

PA STATE	GSM_PA_EN
OFF	L
ON	H

MODE	GSM_PA_BAND
GSM850/EGSM	L
DCS1800/PCS1900	H

EDGE

PCS-CLASS E2 (26dBm)
DCS-CLASS E2 (26dBm)
GCELL-CLASS E2 (27dBm)
EGSM-CLASS E2 (27dBm)

GSM

PCS-CLASS1-1W (30dBm)
DCS-CLASS1-1W (30dBm)
GCELL-CLASS4 -2W(33dBm)
EGSM-CLASS4-2W(33dBm)
GPRS-CLASS12-2W(33dBm)

緯創資通 Wistron Corporation
21F, 88, Sec.1, Hsin Tai Wu Rd., Hsichih,
Taipei Hsien 221, Taiwan, R.O.C.

Title: WCDMA B5 PA AND GSM PA

Size: C | Document Number: T-note | Rev: SC

Date: Tuesday, June 30, 2009 | Sheet 30 of 34

http://hobi-elektronika.net

UMTS TX SWITCH

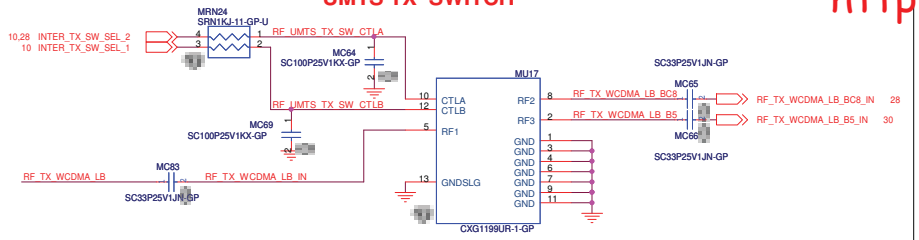

TX_MODE	INTER_TX_SW_SEL_2	INTER_TX_SW_SEL_1
RF_TX_WCDMA_LB_B5	H	L
RF_TX_WCDMA_LB_BC8	L	H

PA_ON SW

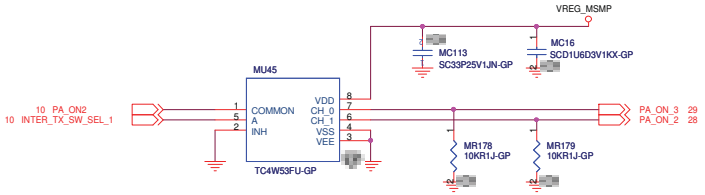

VCTCXO

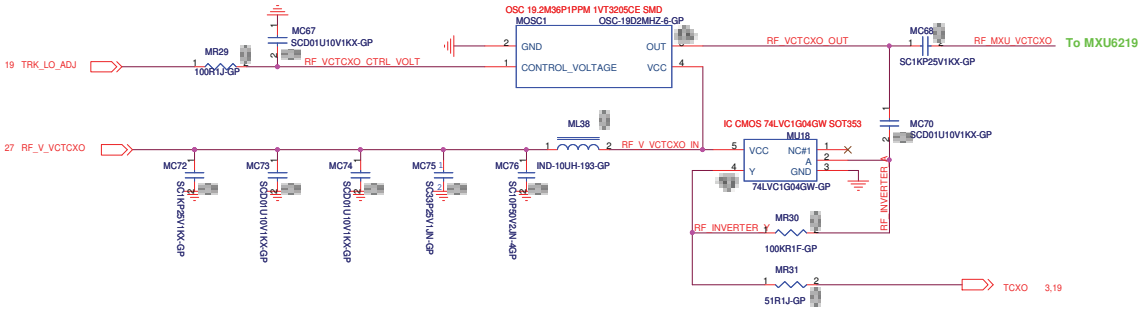

MXU6219

RX INTERSTAGE CHAIN

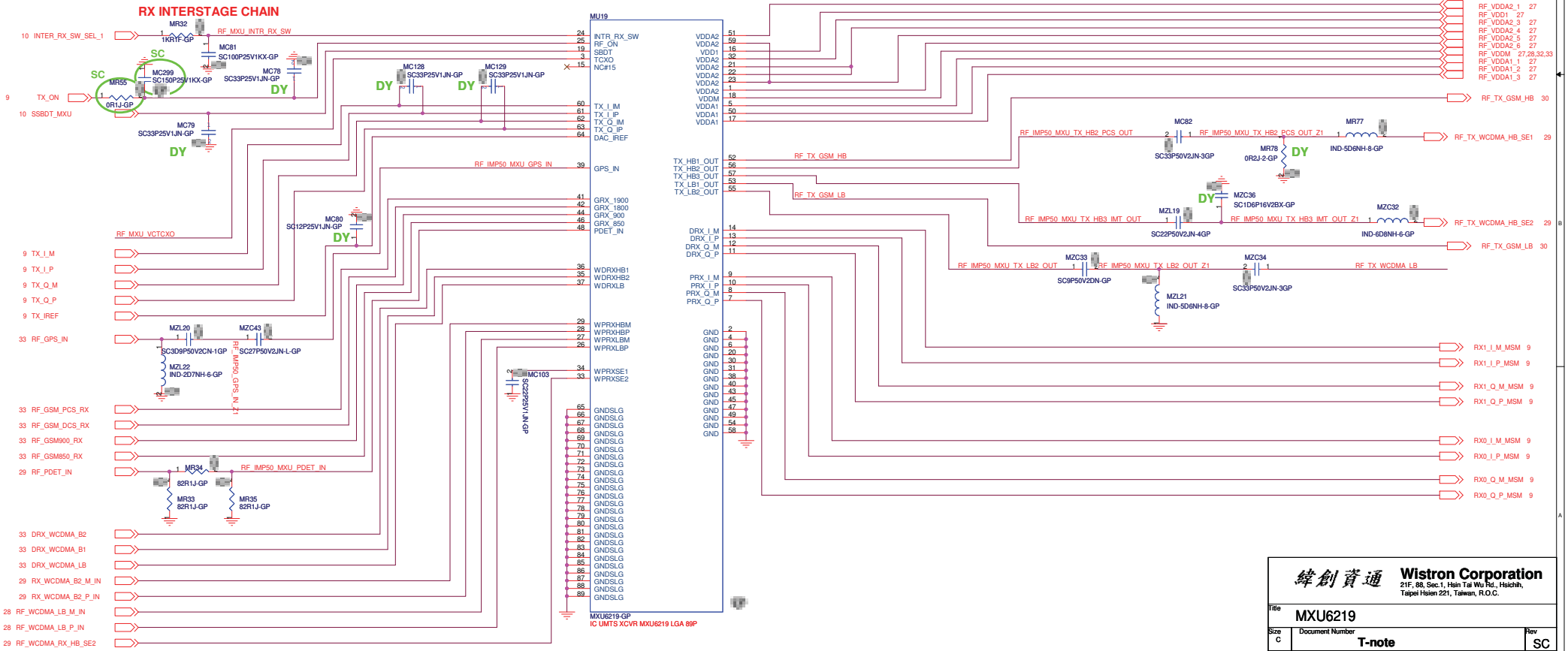

緯創資通	**Wistron Corporation** 21F, 88, Sec.1, Hsin Tai Wu Rd., Hsichih, Taipei Hsien 221, Taiwan, R.O.C.	
Title	MXU6219	
Size C	Document Number T-note	Rev SC
Date: Tuesday, June 30, 2009	Sheet 31 of 34	

http://hobi-elektronika.net

WLAN/BT Interface

WLAN I/F

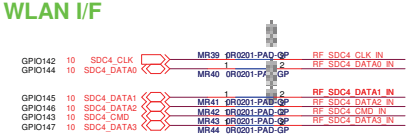

PCM I/F

UART I/F

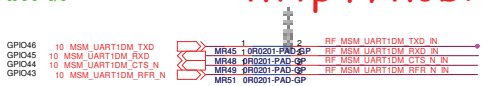

Control

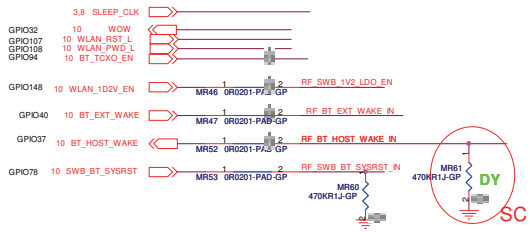

SWB-A23 WLAN/BT Module

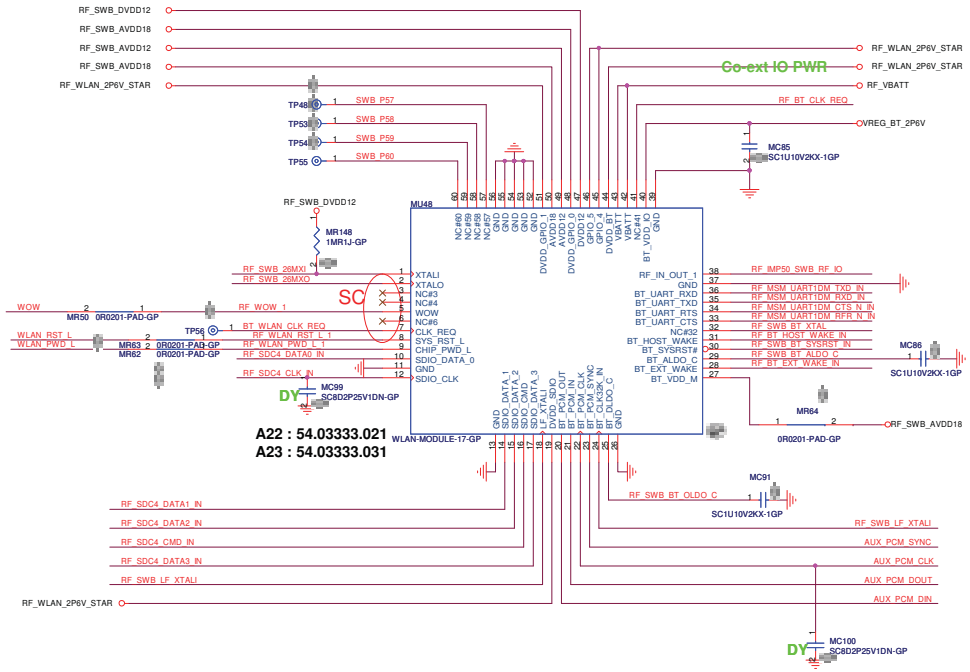

WLAN/BT Power

RF_VBATT 3.3V

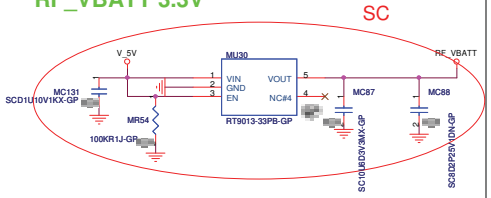

WLAN 2.6V

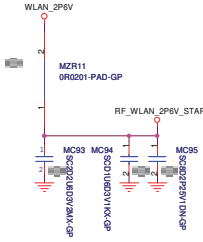

BT IO PWR 2.6V

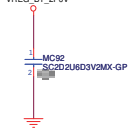

WLAN 1.8V

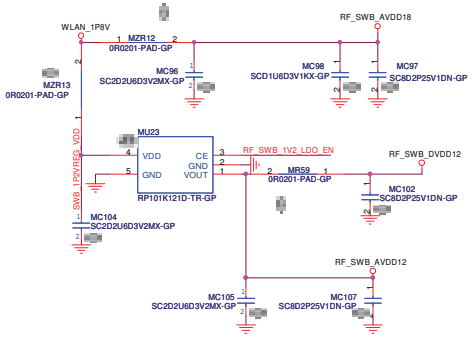

WLAN/BT Clock

32.768KHz Clock for WLAN/BT

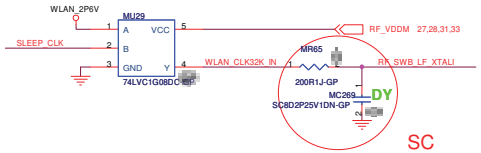

WLAN 26MHz XTAL

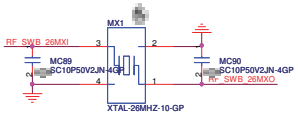

BT 19.2MHz TCXO

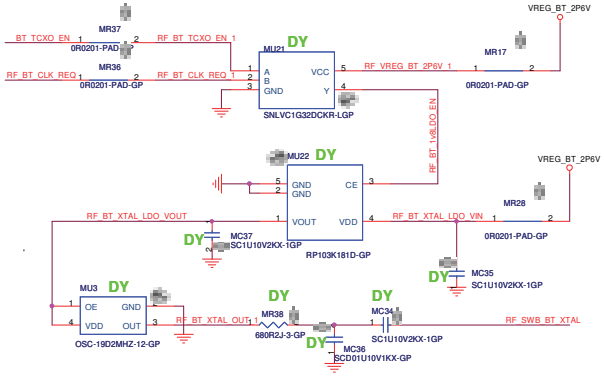

2.4GHz Antenna Pads

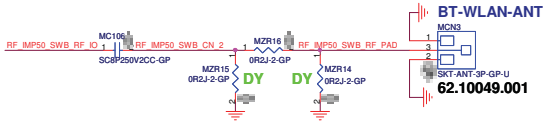

緯創資通 **Wistron Corporation**
21F, 88, Sec.1, Hsin Tai Wu Rd., Hsichih, Taipei Hsien 221, Taiwan, R.O.C.

Title	SWB-A23 BT+WLAN	
Size A2	Document Number T-note	Rev SC
Date: Tuesday, June 30, 2009	Sheet 32 of 34	

PRIMARY ANTENNA & SWITCHPLEXER

http://hobi-elektronika.net

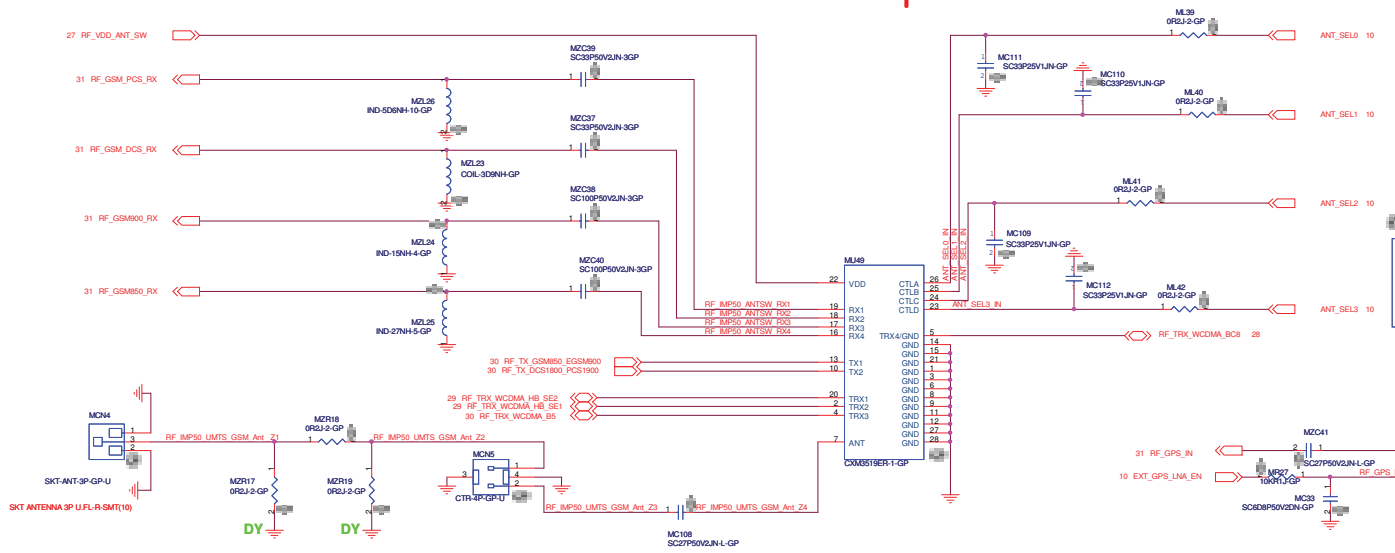

1P9T SWITCH LOGIC

MODE	ANT_SEL0	ANT_SEL1	ANT_SEL2	ANT_SEL3
GSM850/EGSM TX	H	H	L	L
DCS1800/PCS1900 TX	H	L	L	L
GSM850 RX	L	H	L	L
EGSM900 RX	L	H	H	L
DCS1800 RX	L	L	H	L
PCS1900 RX	L	L	L	L
TRX1(BC1)	H	L	H	L
TRX2(BC2)	H	H	H	L
TRX3(BC5)	H	L	H	H
TRX4(BC8)	H	H	H	H

GPS Circuit

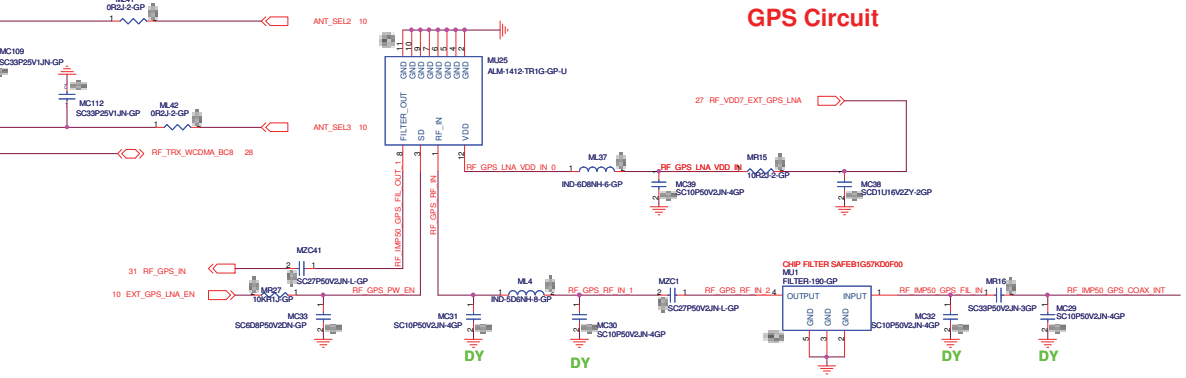

RX DIVERSITY

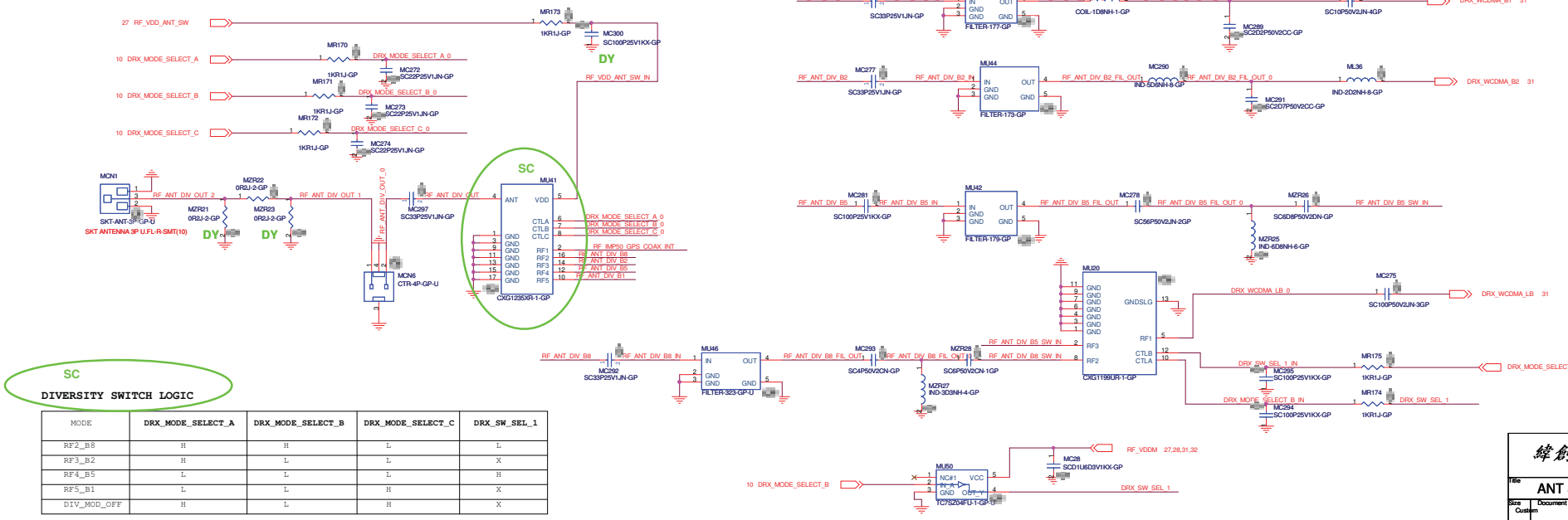

SC

DIVERSITY SWITCH LOGIC

MODE	DRX_MODE_SELECT_A	DRX_MODE_SELECT_B	DRX_MODE_SELECT_C	DRX_SW_SEL_1
RF2_B8	H	H	L	L
RF3_B2	H	L	L	X
RF4_B5	L	L	L	H
RF5_B1	L	L	H	X
DIV_MOD_OFF	H	L	H	X

緯創資通 Wistron Corporation
21F, 88, Sec.1, Hsin Tai Wu Rd., Hsichih,
Taipei Hsien 221, Taiwan, R.O.C.

Title: ANT SW & ANT DIVERSITY

Size: Custom | Document Number: T-note | Rev: SC

Date: Tuesday, June 30, 2009 | Sheet 33 of 34

http://hobi-elektronika.net

緯創資通

Wistron Corporation
21F, 88, Sec.1, Hsin Tai Wu Rd., Hsichih,
Taipei Hsien 221, Taiwan, R.O.C.

Title	Revision	
Size A4	Document Number **T-note**	Rev SC
Date: Tuesday, June 30, 2009	Sheet 34 of 34	