Tibet Block Diagram

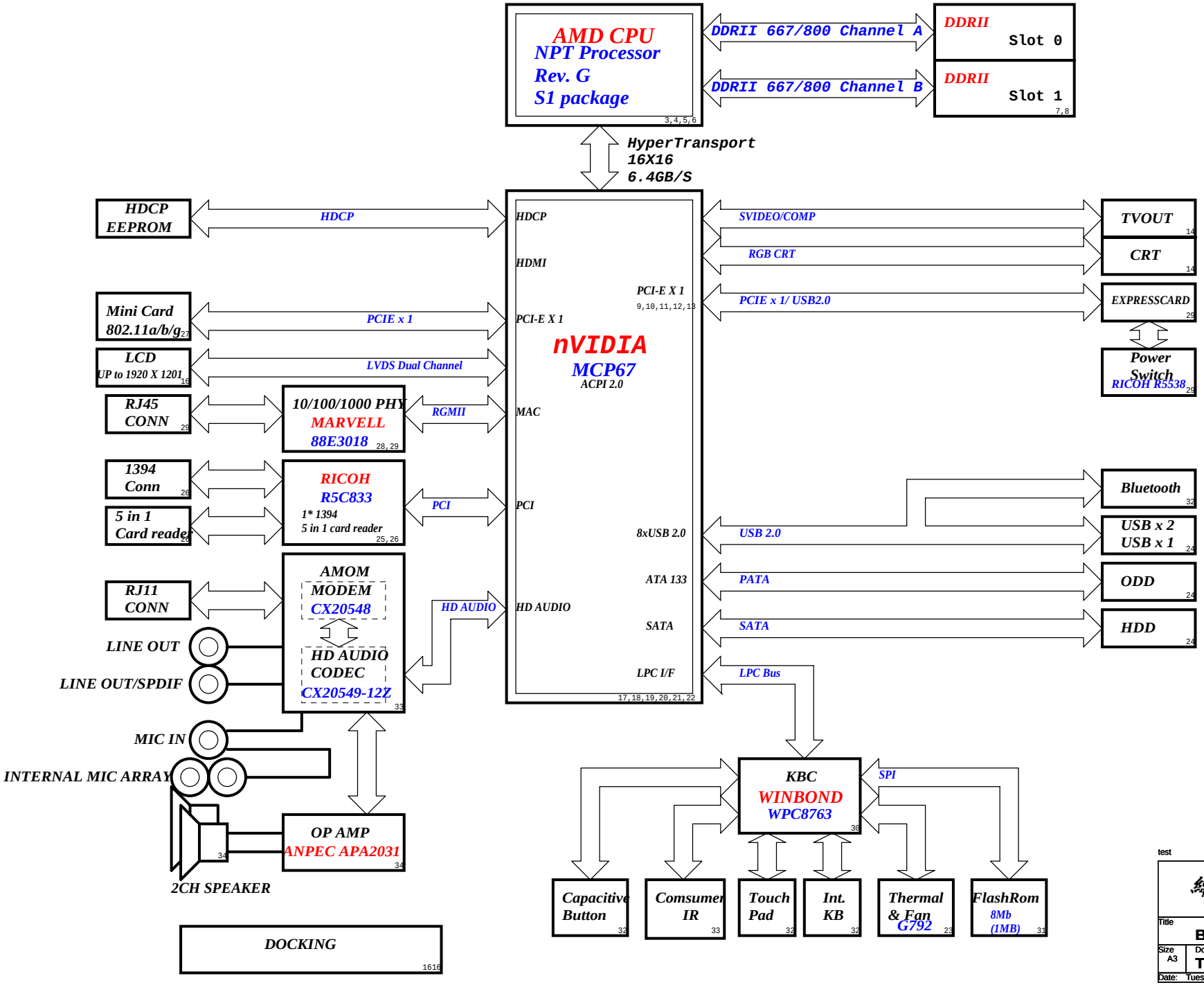

SYSTEM DC/DC MAX8734A	
INPUTS	OUTPUTS
DCBATOUT	3D3V_S5 5V_S5

SYSTEM DC/DC MAX8743	
INPUTS	OUTPUTS
DCBATOUT	1D2V_HT_S0 1D2V_CORE_S0

MAXIM CHARGER MAX8725	
INPUTS	OUTPUTS
DCBATOUT	BT+ 18V 3.0A 5V 100mA

CPU DC/DC MAX8760	
INPUTS	OUTPUTS
DCBATOUT	VCC_CORE_S0 1.35V 35A

PCB LAYER
L1:SIGNAL 1
L2:GND
L3:SIGNAL 2
L4:SIGNAL 3
L5:VCC
L6:SIGNAL 4

test

緯創資通 **Wistron Corporation**
21F, 88, Sec.1, Hsin Tai Wu Rd., Hsichih,
Taipei Hsien 221, Taiwan, R.O.C.

Title: **Block Diagram**

Size	Document Number	Rev
A3	TIBET	SA

Date: Tuesday, August 14, 2007 Sheet 1 of 44

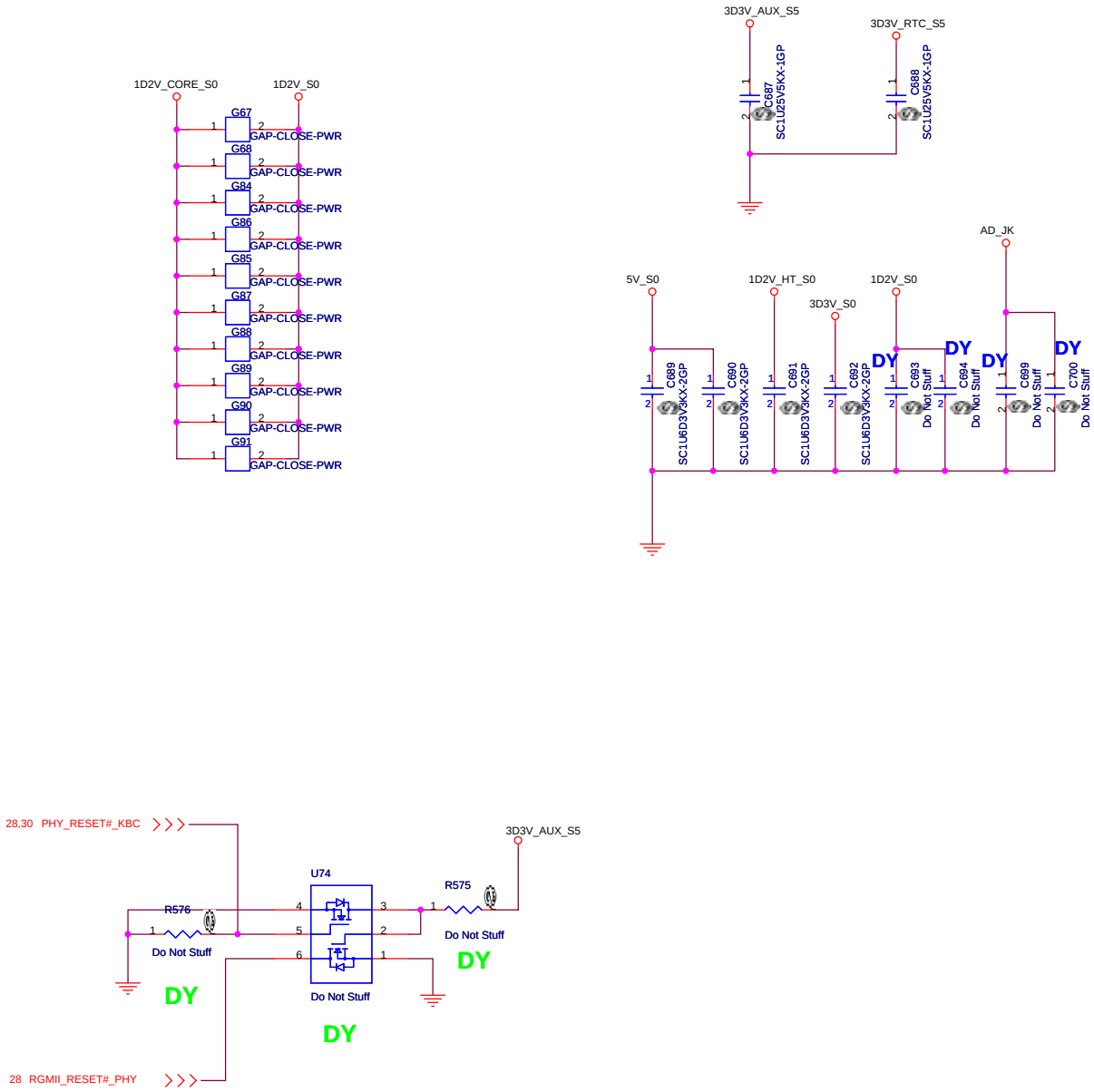

test

Wistron Corporation
21F, 88, Sec.1, Hsin Tai Wu Rd., Hsichih,
Taipei Hsien 221, Taiwan, R.O.C.

Title

Size	Document Number	Rev
A3	TIBET	SA

Date: Tuesday, August 14, 2007 Sheet 2 of 44

test

Wistron Corporation
21F, 88, Sec.1, Hsin Tai Wu Rd., Hsichih,
Taipei Hsien 221, Taiwan, R.O.C.

Title: **CPU(1/4) HT**

Size	Document Number	Rev
A3	TIBET	SA

Date: Tuesday, August 14, 2007 Sheet 3 of 44

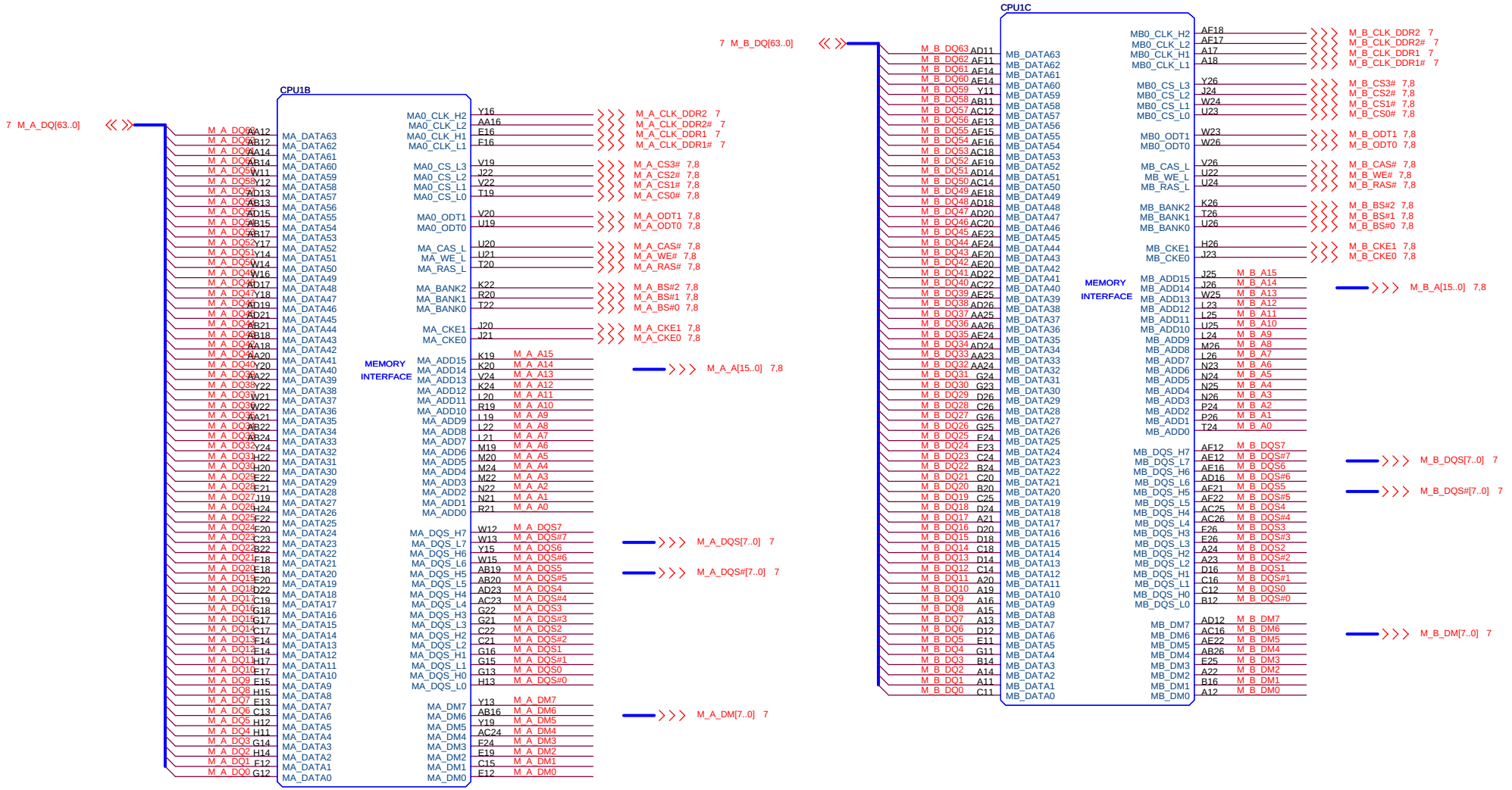

test

Wistron Corporation
21F, 88, Sec.1, Hsin Tai Wu Rd., Hsichih,
Taipei Hsien 221, Taiwan, R.O.C.

Title: **CPU(2/4) DDR II**

Size	Document Number	Rev
A3	TIBET	SA

Date: Tuesday, August 14, 2007 Sheet 4 of 44

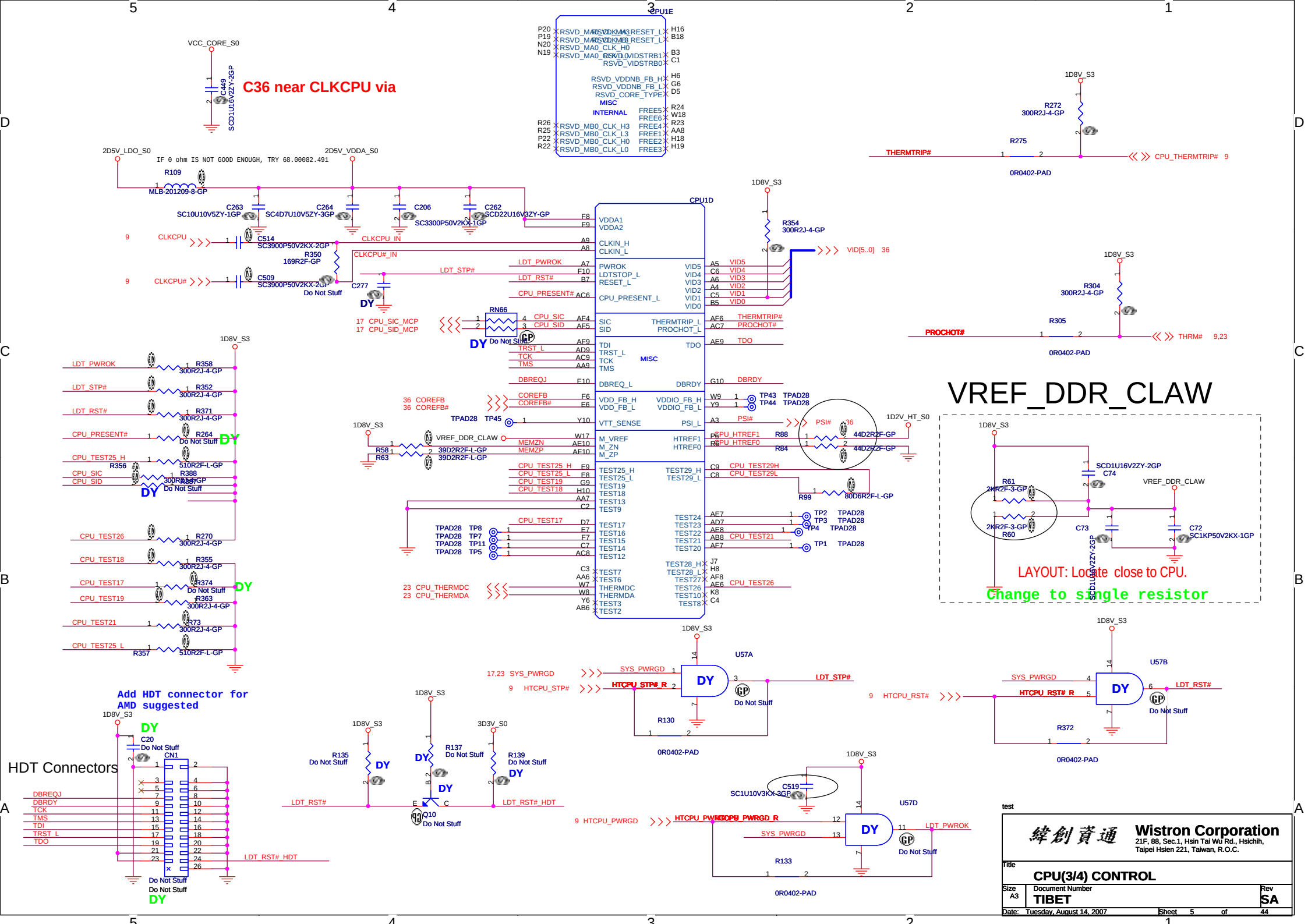
C36 near CLKCPU via
VCC_CORE_S0
C449
SCD1U16V2ZY-2GP
CPU1E
CPU1D
2D5V_LDO_S0
2D5V_VDDA_S0
IF 0 ohm IS NOT GOOD ENOUGH, TRY 68.00082.491
R109
MLB-201209-8-GP
C263
SC10U10V5ZY-1GP
C264
SC4D7U10V5ZY-3GP
C206
SC3300P50V2KX-1GP
C262
SCD22U16V3ZY-GP
CLKCPU
CLKCPU#
C514
SC3900P50V2KX-2GP
C509
SC3900P50V2KX-2GP
Do Not Stuff
R350
169R2F-GP
CLKCPU_IN
CLKCPU#_IN
C277
DY
LDT_PWROK
LDT_STP#
LDT_RST#
CPU_PRESENT#
RN66
CPU_SIC_MCP
CPU_SID_MCP
CPU_SIC
CPU_SID
1D8V_S3
R354
300R2J-4-GP
VID[5..0]
THERMTRIP#
PROCHOT#
TDO
DBREQJ
DBRDY
COREFB
COREFB#
TPAD28
TP45
VREF_DDR_CLAW
MEMZN
MEMZP
R58
R63
39D2R2F-L-GP
CPU_TEST25_H
CPU_TEST25_L
CPU_TEST19
CPU_TEST18
CPU_TEST17
CPU_TEST26
CPU_TEST29H
CPU_TEST29L
CPU_TEST21
CPU_THERMDC
CPU_THERMDA
PSI#
CPU_HTREF1
CPU_HTREF0
R88
R84
44D2R2F-GP
1D2V_HT_S0
R99
80D6R2F-L-GP
TP2
TP3
TP4
TP1
TP8
TP7
TP11
TP5
R358
R352
R371
R264
R356
R388
R387
R270
R355
R374
R363
R73
R357
510R2F-L-GP
300R2J-4-GP
Do Not Stuff
DY
R272
R275
THERMTRIP#
CPU_THERMTRIP#
0R0402-PAD
R304
R305
THRM#
VREF_DDR_CLAW
SCD1U16V2ZY-2GP
C74
R61
2KR2F-3-GP
R60
C73
C72
SC1KP50V2KX-1GP
LAYOUT: Locate close to CPU.
Change to single resistor
U57A
U57B
U57D
SYS_PWRGD
HTCPU_STP#
HTCPU_STP# R
HTCPU_RST#
HTCPU_RST# R
HTCPU_PWRGD
HTCPU_PWRGD R
LDT_STP#
LDT_RST#
LDT_PWROK
R130
R372
R133
C519
SC1U10V3KX-3GP
Add HDT connector for AMD suggested
HDT Connectors
CN1
C20
DBREQJ
DBRDY
TCK
TMS
TDI
TRST_L
TDO
LDT_RST#_HDT
R135
R137
R139
Q10
3D3V_S0
test
Wistron Corporation
21F, 88, Sec.1, Hsin Tai Wu Rd., Hsichih,
Taipei Hsien 221, Taiwan, R.O.C.
Title
CPU(3/4) CONTROL
Size A3
Document Number
TIBET
Rev SA
Date: Tuesday, August 14, 2007
Sheet 5 of 44

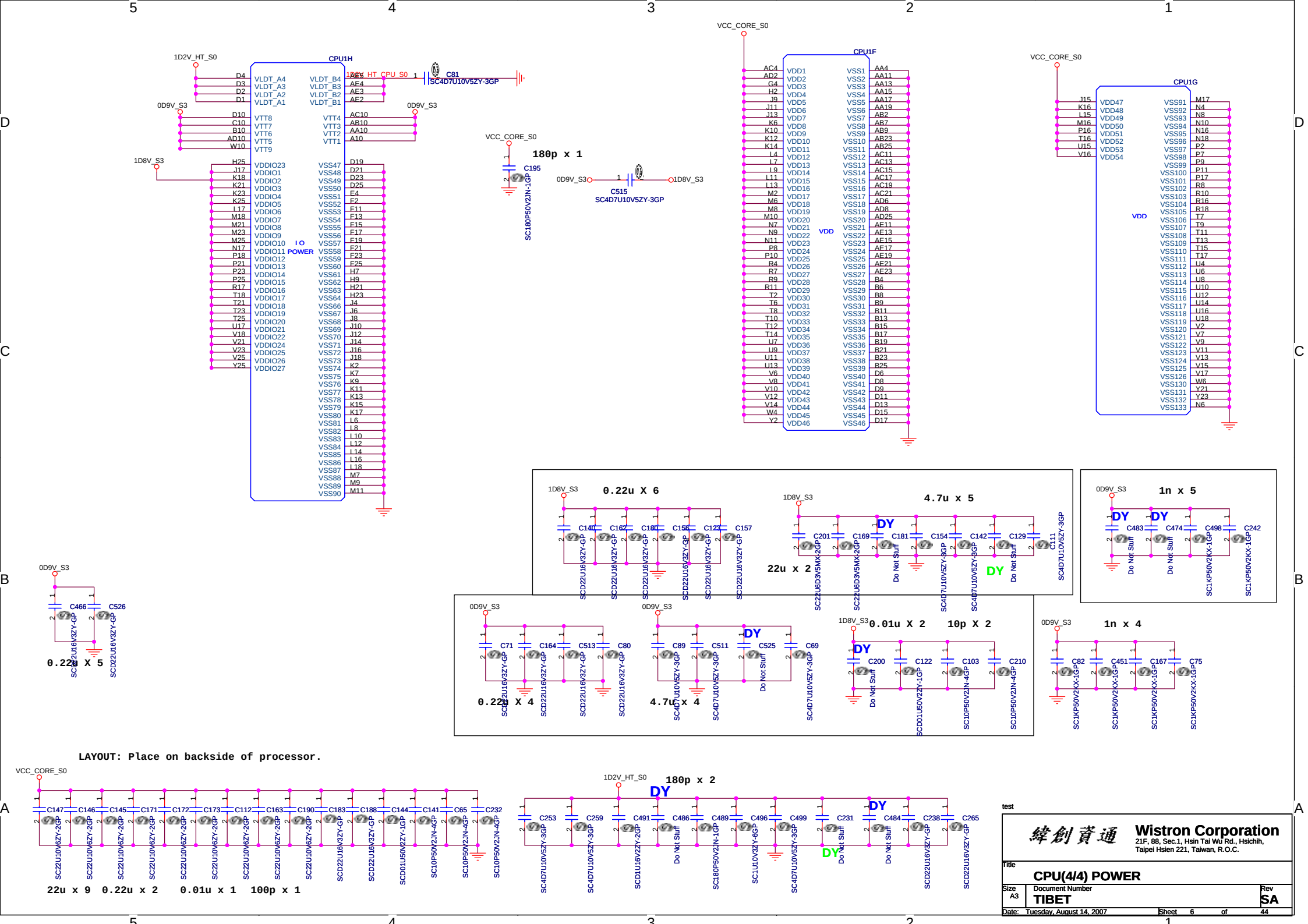
CPU1H
CPU1F
CPU1G
VDD
IO POWER
1D2V_HT_S0
0D9V_S3
1D8V_S3
VCC_CORE_S0
1D2V_HT_CPU_S0
C81
SC4D7U10V5ZY-3GP
180p x 1
C195
SC180P50V2JN-1GP
C515
SC4D7U10V5ZY-3GP
0.22u X 6
4.7u x 5
22u x 2
1n x 5
0.22u X 5
0.22u X 4
4.7u x 4
0.01u X 2
10p X 2
1n x 4
LAYOUT: Place on backside of processor.
22u x 9
0.22u x 2
0.01u x 1
100p x 1
180p x 2
DY
Do Not Stuff
test
Wistron Corporation
21F, 88, Sec.1, Hsin Tai Wu Rd., Hsichih,
Taipei Hsien 221, Taiwan, R.O.C.
Title
CPU(4/4) POWER
Size A3
Document Number
TIBET
Rev SA
Date: Tuesday, August 14, 2007
Sheet 6 of 44

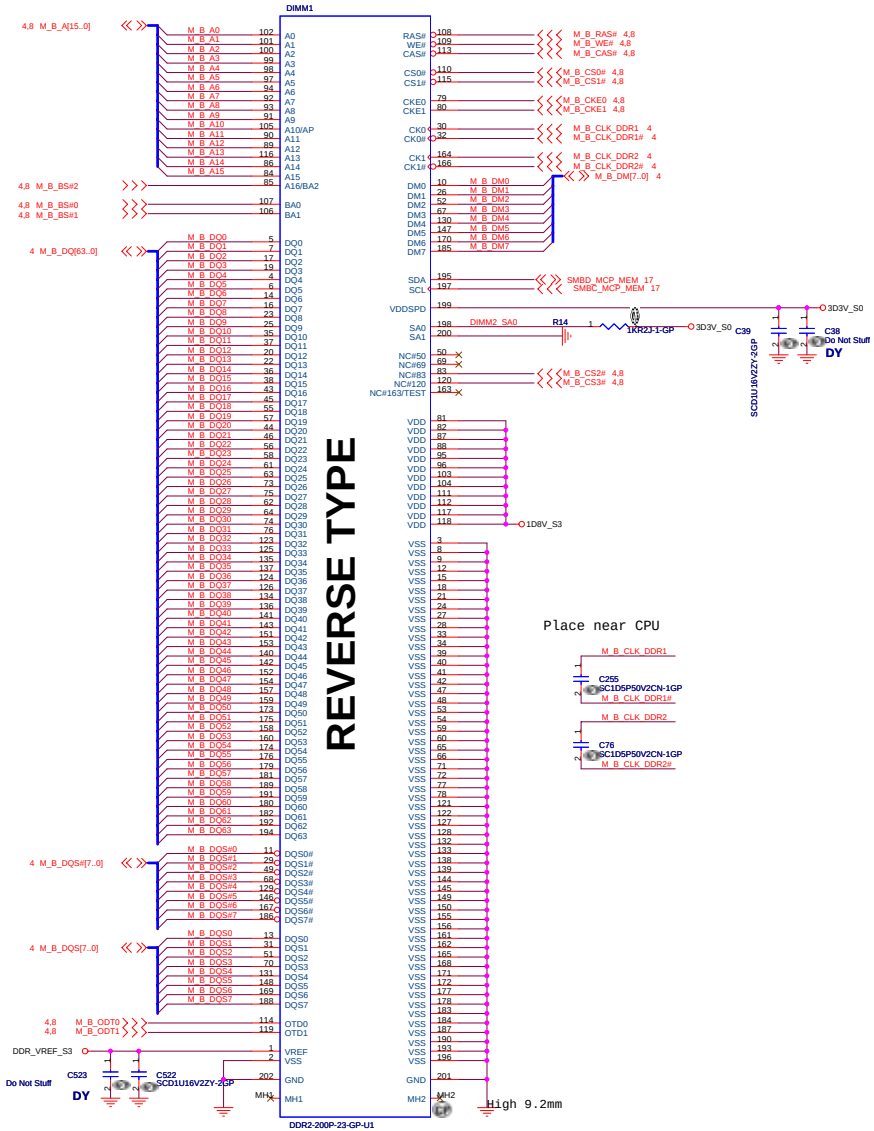

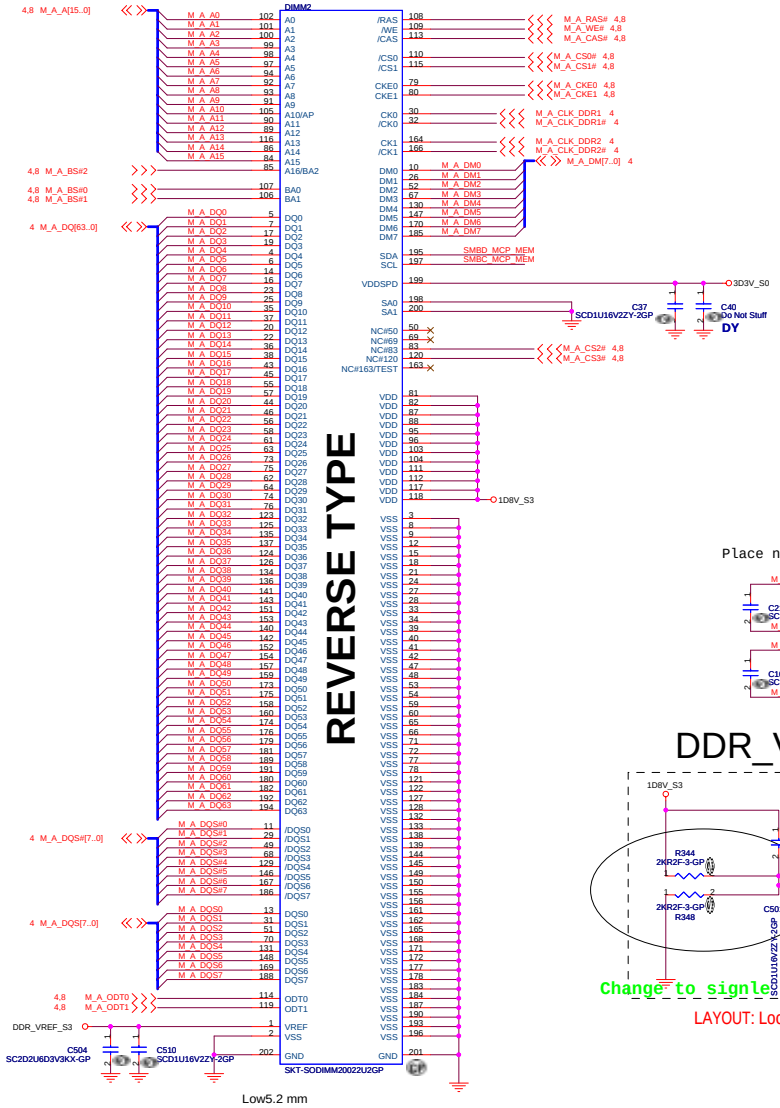

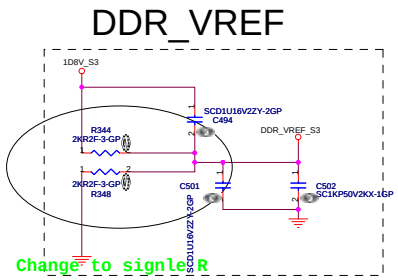

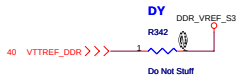

test

Wistron Corporation
21F, 88, Sec.1, Hsin Tai Wu Rd., Hsichih,
Taipei Hsien 221, Taiwan, R.O.C.

Title: DDR2-SOCKET

Size	Document Number	Rev
A2	TIBET	SA

Date: Tuesday, August 14, 2007 Sheet 7 of 44

PARALLEL TERMINATION

Put decap near power(0.9V) and pull-up resistor

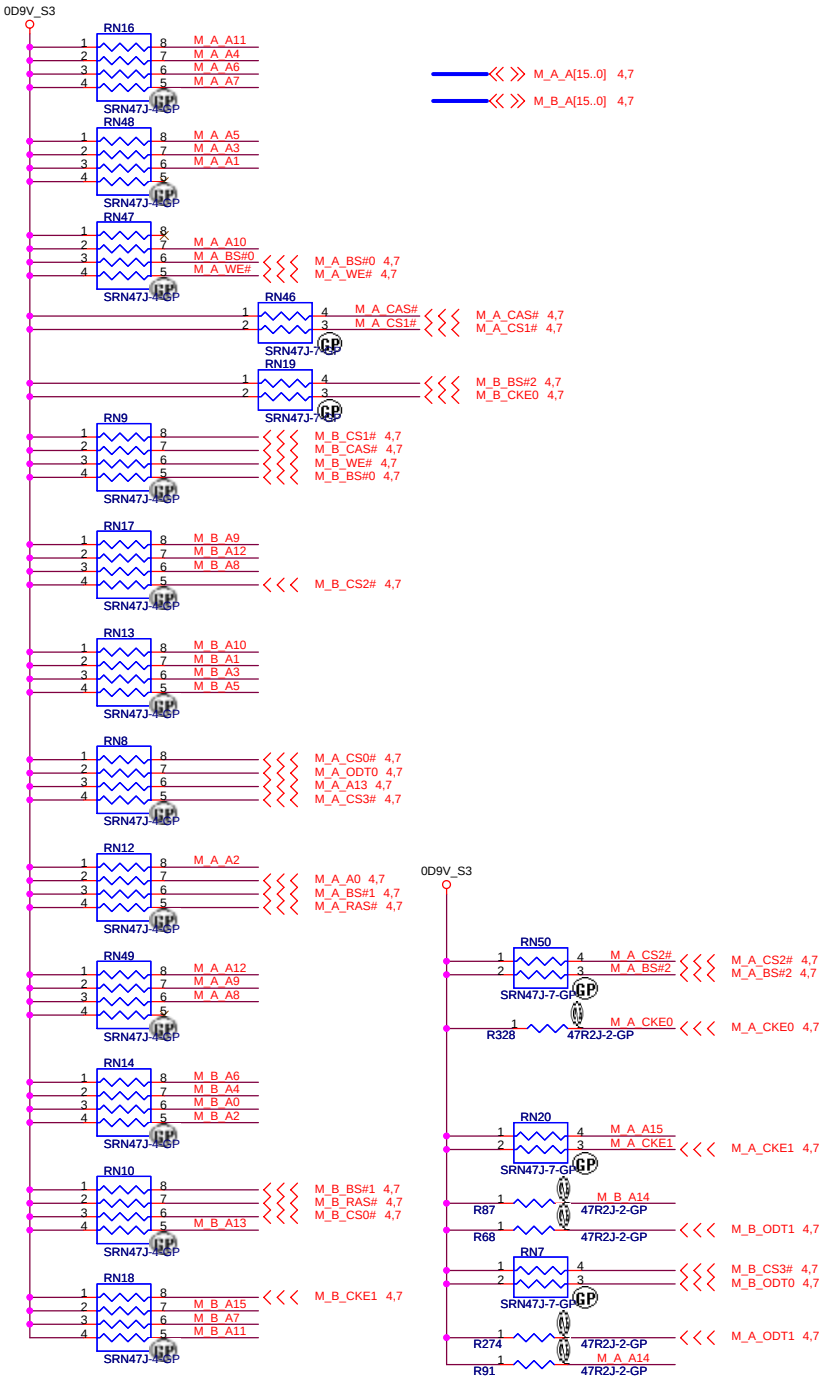

Decoupling Capacitor

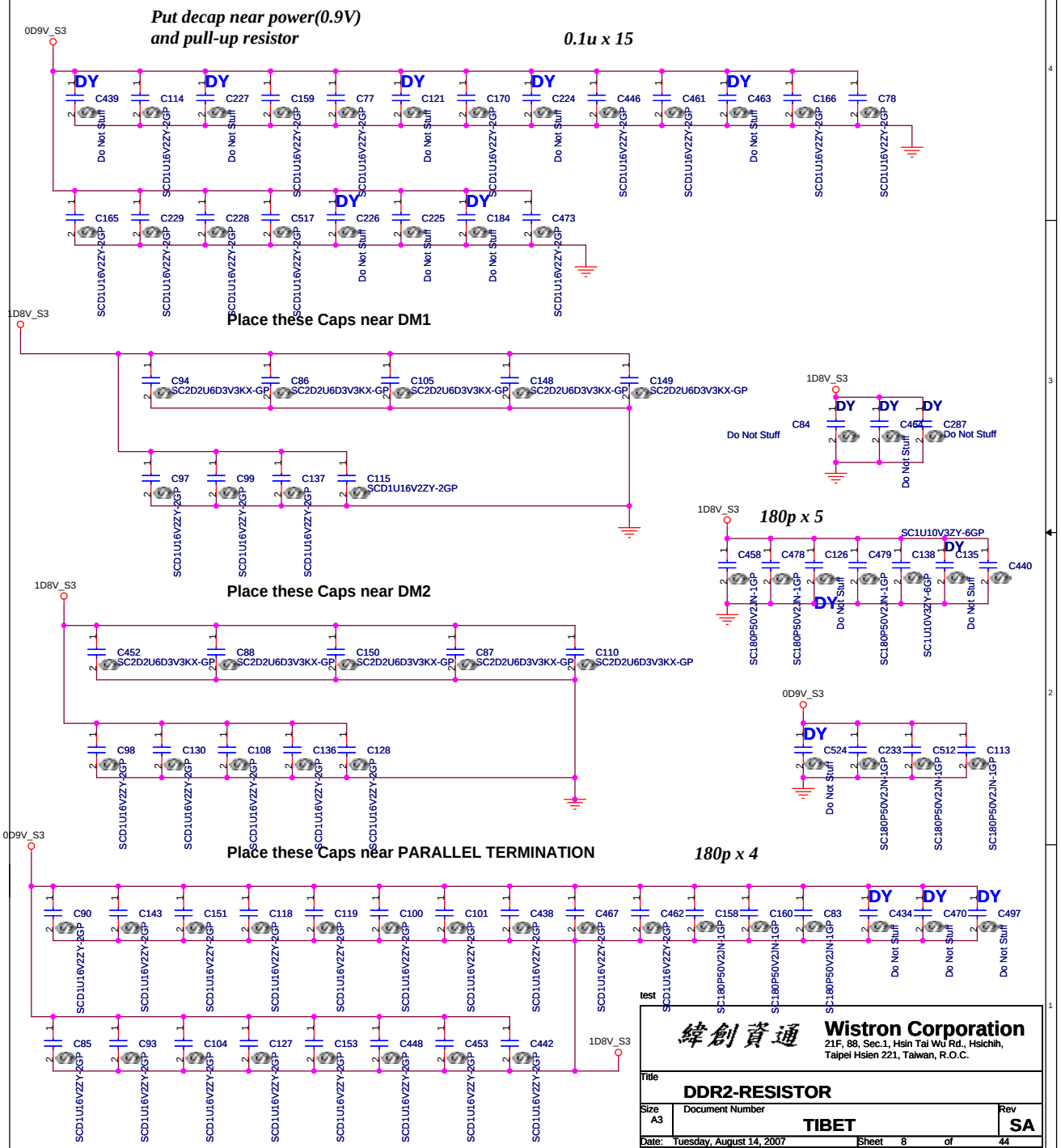

test

緯創資通	**Wistron Corporation** 21F, 88, Sec.1, Hsin Tai Wu Rd., Hsichih, Taipei Hsien 221, Taiwan, R.O.C.	
Title	**DDR2-RESISTOR**	
Size A3	Document Number **TIBET**	Rev **SA**
Date: Tuesday, August 14, 2007	Sheet 8 of 44	

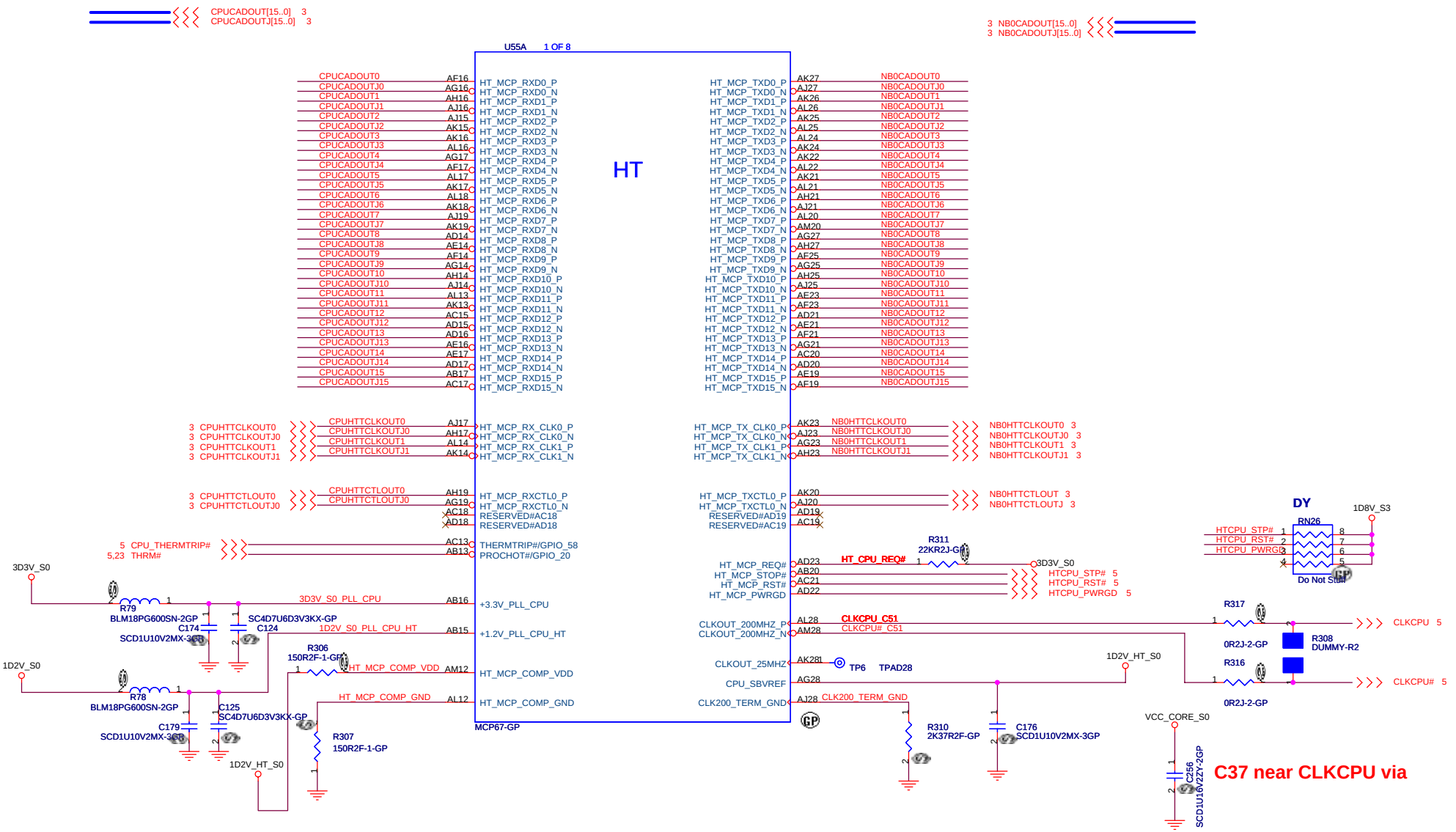

test

Wistron Corporation
21F, 88, Sec.1, Hsin Tai Wu Rd., Hsichih,
Taipei Hsien 221, Taiwan, R.O.C.

Title: **MCP67(1/8) HT CPU**

Size	Document Number	Rev
A3	TIBET	SA

Date: Tuesday, August 14, 2007 Sheet 9 of 44

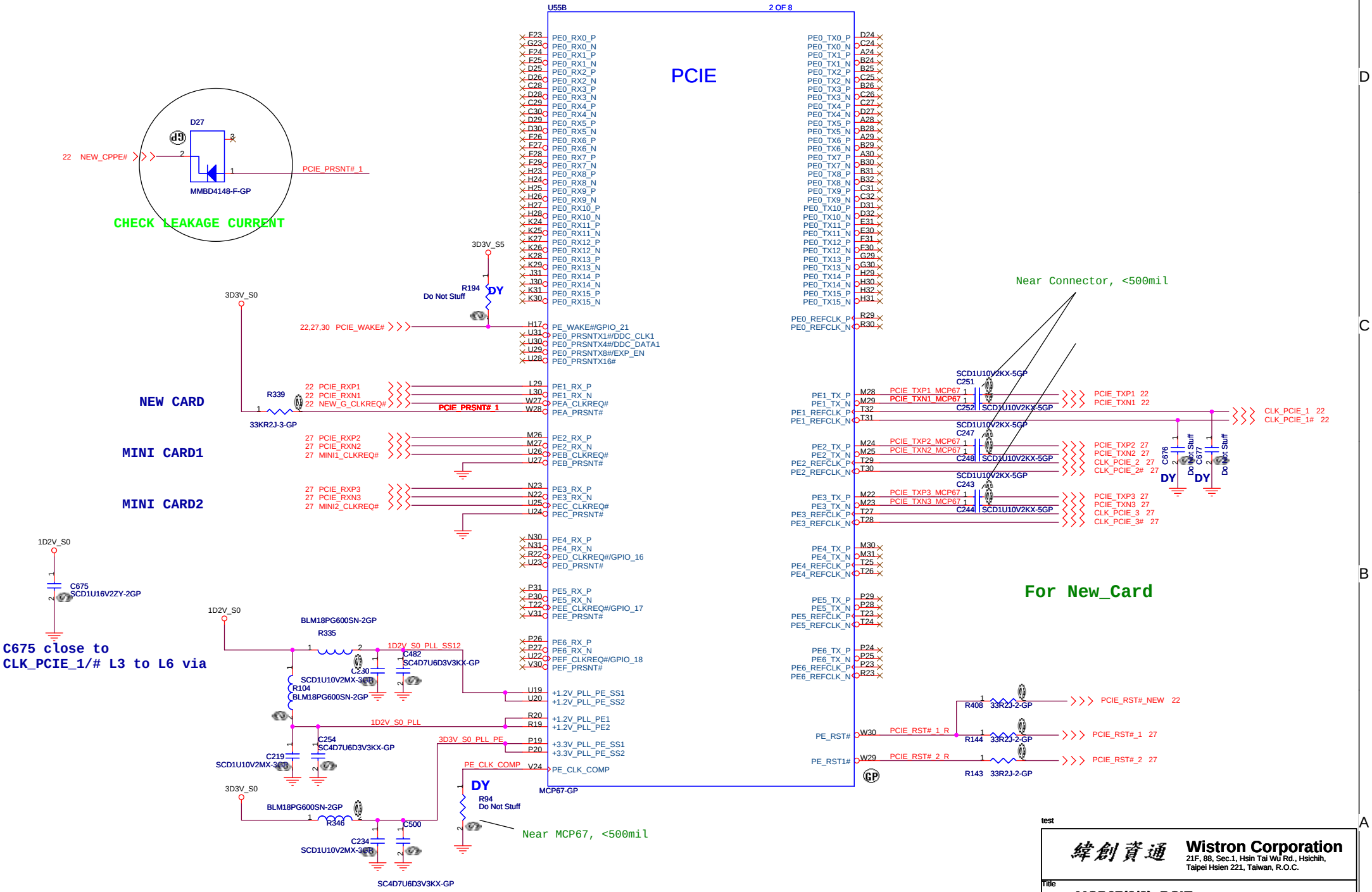

test

Wistron Corporation
21F, 88, Sec.1, Hsin Tai Wu Rd., Hsichih,
Taipei Hsien 221, Taiwan, R.O.C.

Title: MCP67(2/8)_PCIE

Size: A3 | Document Number: TIBET | Rev: SA

Date: Tuesday, August 14, 2007 | Sheet 10 of 44

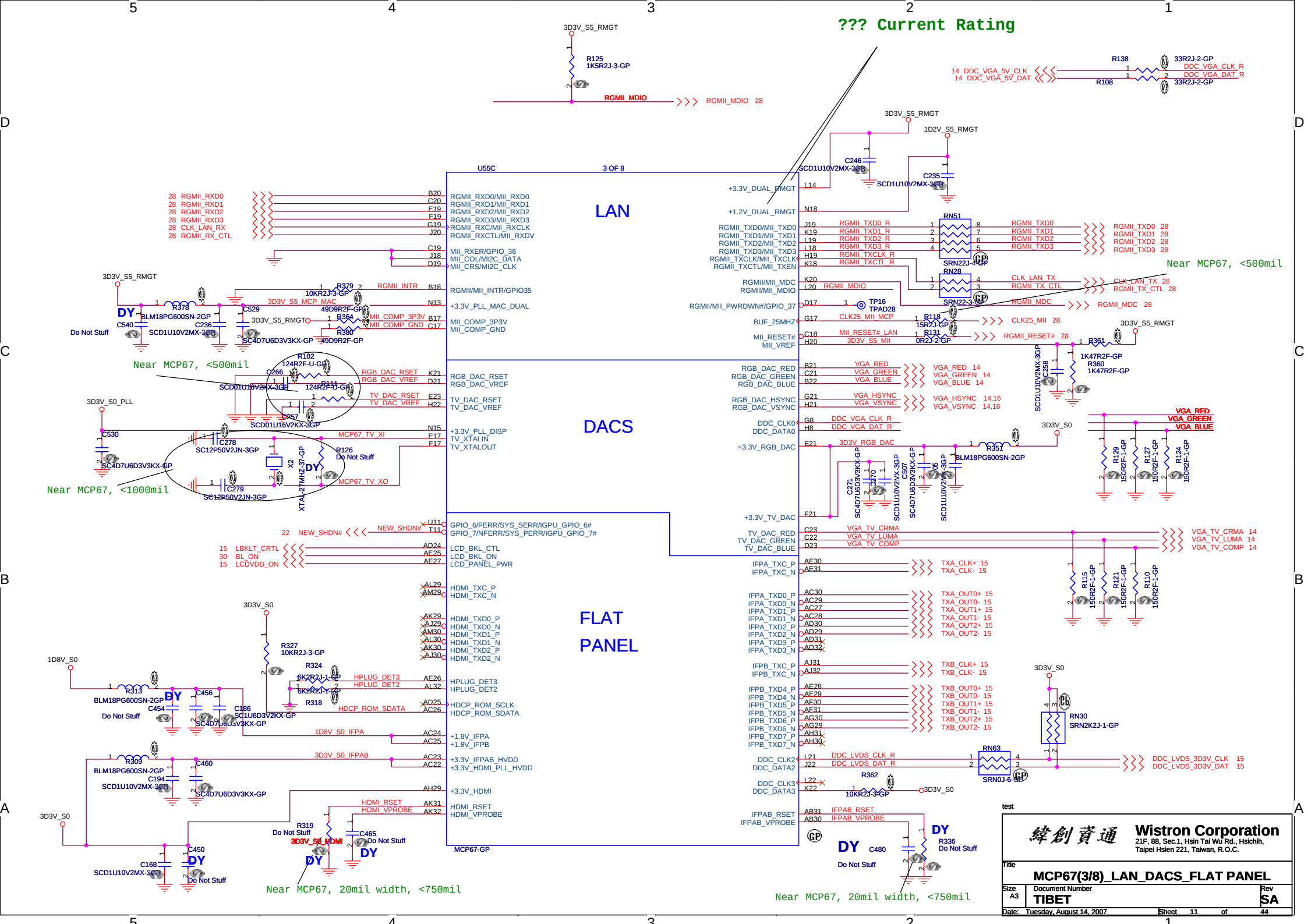
??? Current Rating
U55C
3 OF 8
LAN
DACS
FLAT PANEL
MCP67-GP
Near MCP67, <500mil
Near MCP67, <1000mil
Near MCP67, 20mil width, <750mil
Wistron Corporation
21F, 88, Sec.1, Hsin Tai Wu Rd., Hsichih, Taipei Hsien 221, Taiwan, R.O.C.
MCP67(3/8)_LAN_DACS_FLAT PANEL
TIBET
Size A3
Rev SA
Date: Tuesday, August 14, 2007
Sheet 11 of 44

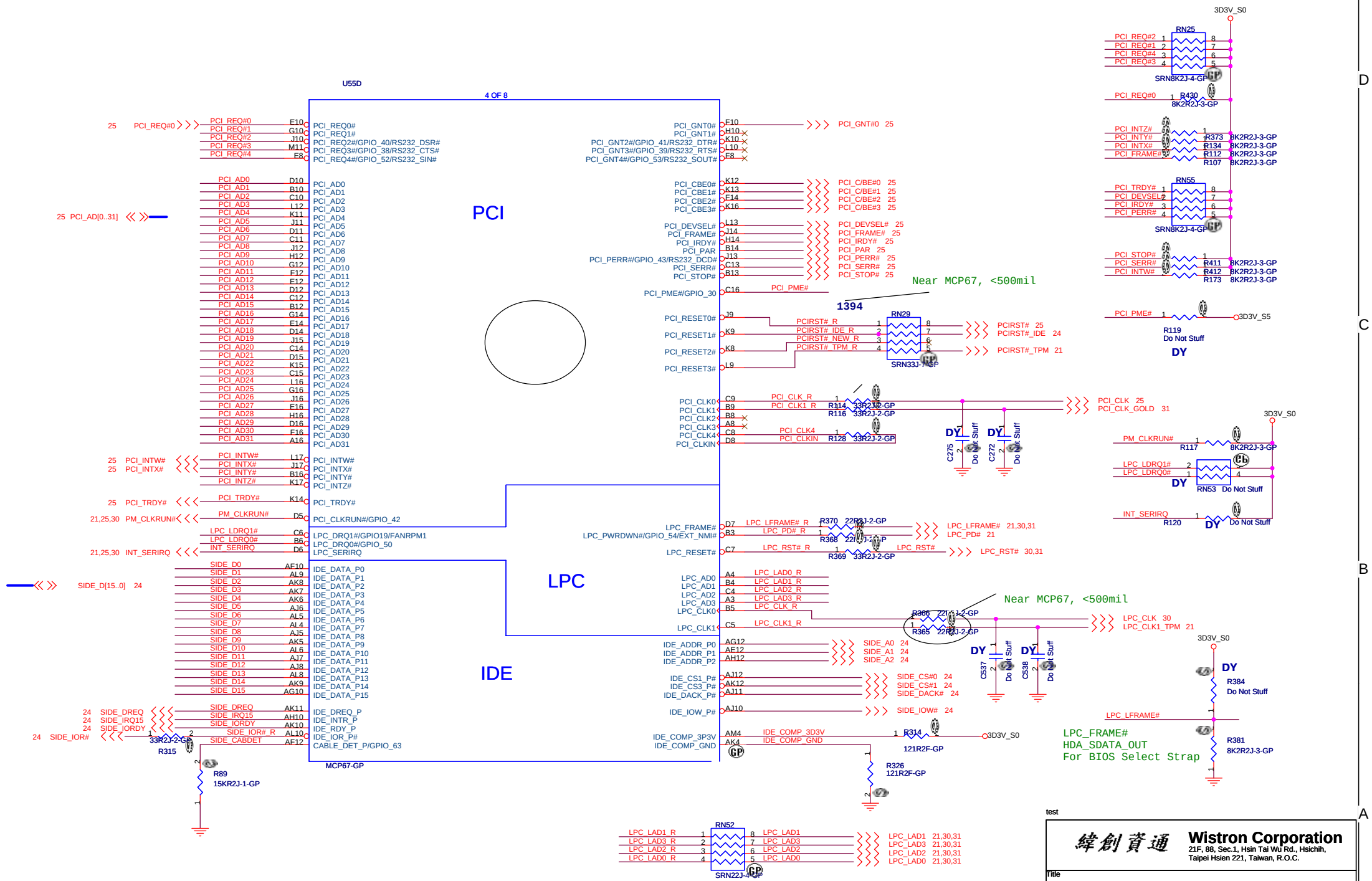

test

Wistron Corporation
21F, 88, Sec.1, Hsin Tai Wu Rd., Hsichih,
Taipei Hsien 221, Taiwan, R.O.C.

Title: MCP67(4/8)_PCI_LPC_IDE

Size: A3 | Document Number: TIBET | Rev: SA

Date: Tuesday, August 14, 2007 | Sheet 12 of 44

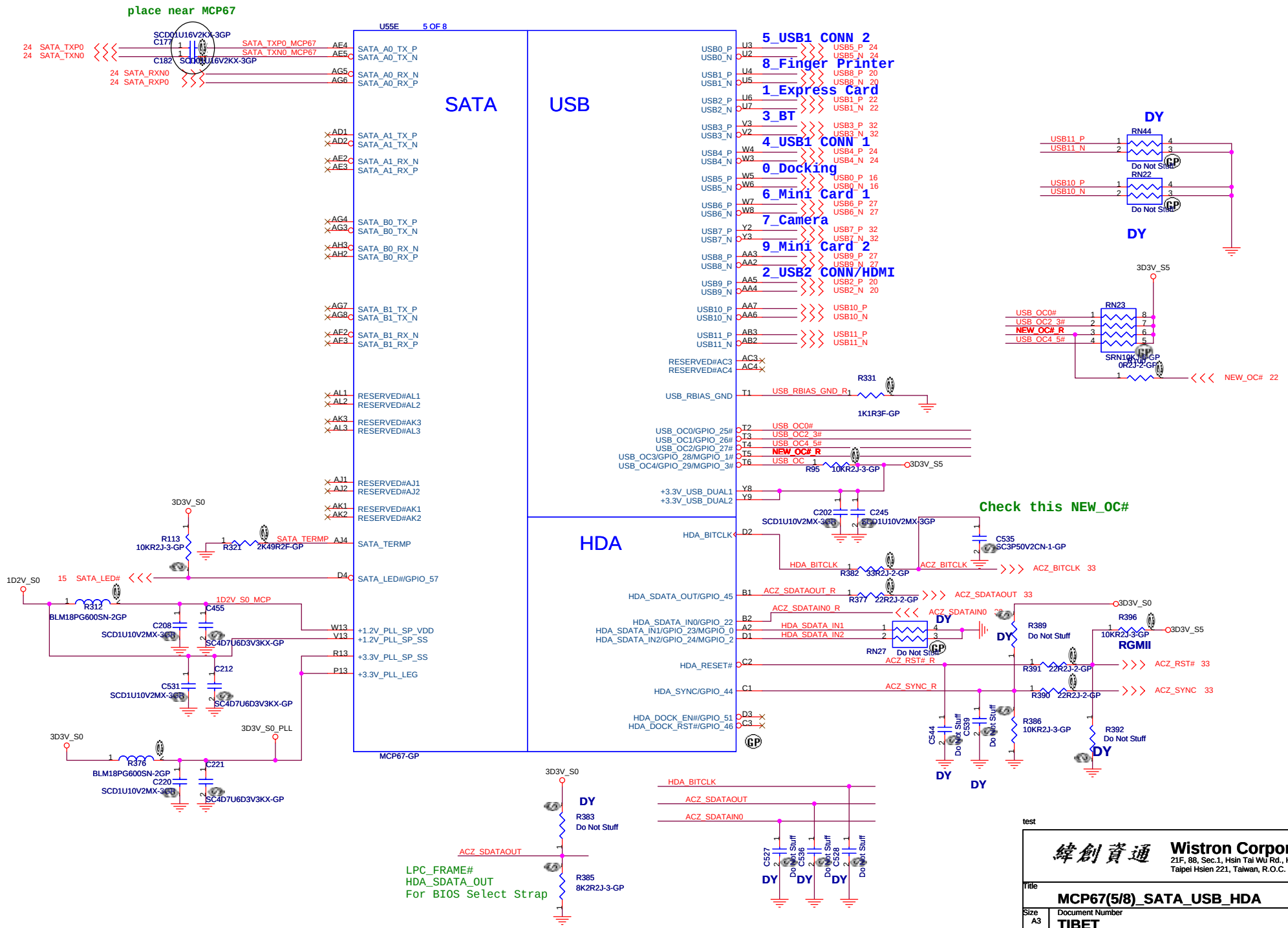
place near MCP67
U55E 5 OF 8
SATA
USB
HDA
MCP67-GP
5_USB1 CONN 2
8_Finger Printer
1_Express Card
3_BT
4_USB1 CONN 1
0_Docking
6_Mini Card 1
7_Camera
9_Mini Card 2
2_USB2 CONN/HDMI
DY
RN44
RN22
RN23
Do Not Stuff
3D3V_S5
NEW_OC# 22
Check this NEW_OC#
R331
1K1R3F-GP
R95 10KR2J-3-GP
C202 SCD1U10V2MX-3GP
C245 SCD1U10V2MX-3GP
C535 SC3P50V2CN-1-GP
R382 33R2J-2-GP
R377 22R2J-2-GP
ACZ_BITCLK 33
ACZ_SDATAOUT 33
ACZ_SDATAIN0 33
ACZ_RST# 33
ACZ_SYNC 33
R389 Do Not Stuff
R396 10KR2J-3-GP
RGMII
R391 22R2J-2-GP
R390 22R2J-2-GP
R386 10KR2J-3-GP
R392 Do Not Stuff
C544 Do Not Stuff
C539 Do Not Stuff
RN27 Do Not Stuff
SATA_TXP0 24
SATA_TXN0 24
SATA_RXN0 24
SATA_RXP0 24
SATA_TXP0_MCP67
SATA_TXN0_MCP67
SCD01U16V2KX-3GP
SATA_TERMP
R321 2K49R2F-GP
R113 10KR2J-3-GP
SATA_LED# 15
1D2V_S0
1D2V_S0_MCP
R312 BLM18PG600SN-2GP
C208 SCD1U10V2MX-3GP
C455 SC4D7U6D3V3KX-GP
C212 SC4D7U6D3V3KX-GP
C531 SCD1U10V2MX-3GP
3D3V_S0
3D3V_S0_PLL
R376 BLM18PG600SN-2GP
C220 SCD1U10V2MX-3GP
C221 SC4D7U6D3V3KX-GP
R383 Do Not Stuff
R385 8K2R2J-3-GP
LPC_FRAME#
HDA_SDATA_OUT
For BIOS Select Strap
C527 Do Not Stuff
C536 Do Not Stuff
C528 Do Not Stuff
test
Wistron Corporation
21F, 88, Sec.1, Hsin Tai Wu Rd., Hsichih,
Taipei Hsien 221, Taiwan, R.O.C.
Title
MCP67(5/8)_SATA_USB_HDA
Size A3
Document Number TIBET
Rev SA
Date: Tuesday, August 14, 2007
Sheet 13 of 44

CRT I/F & CONNECTOR

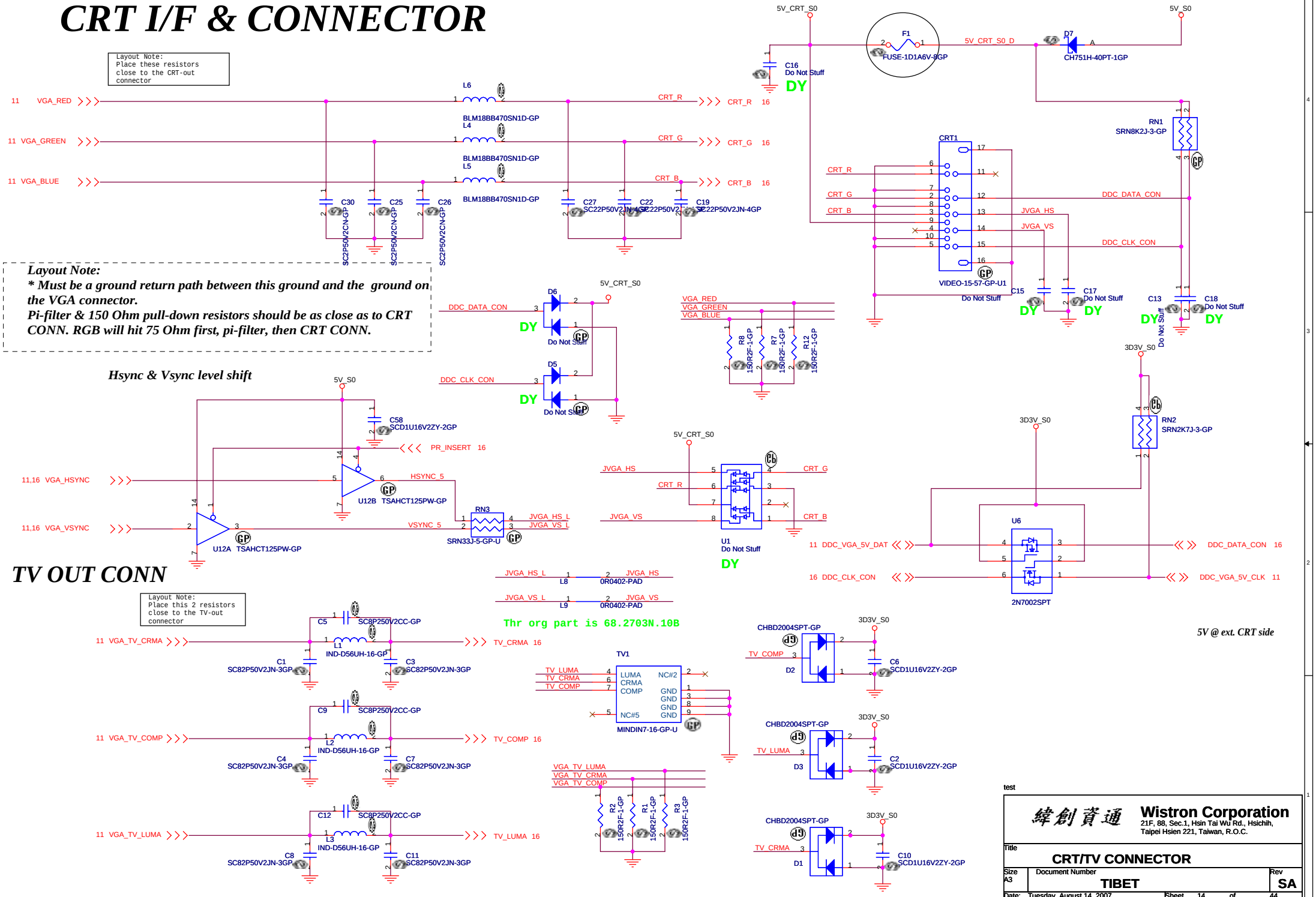

LED / INVERTER INTERFACE

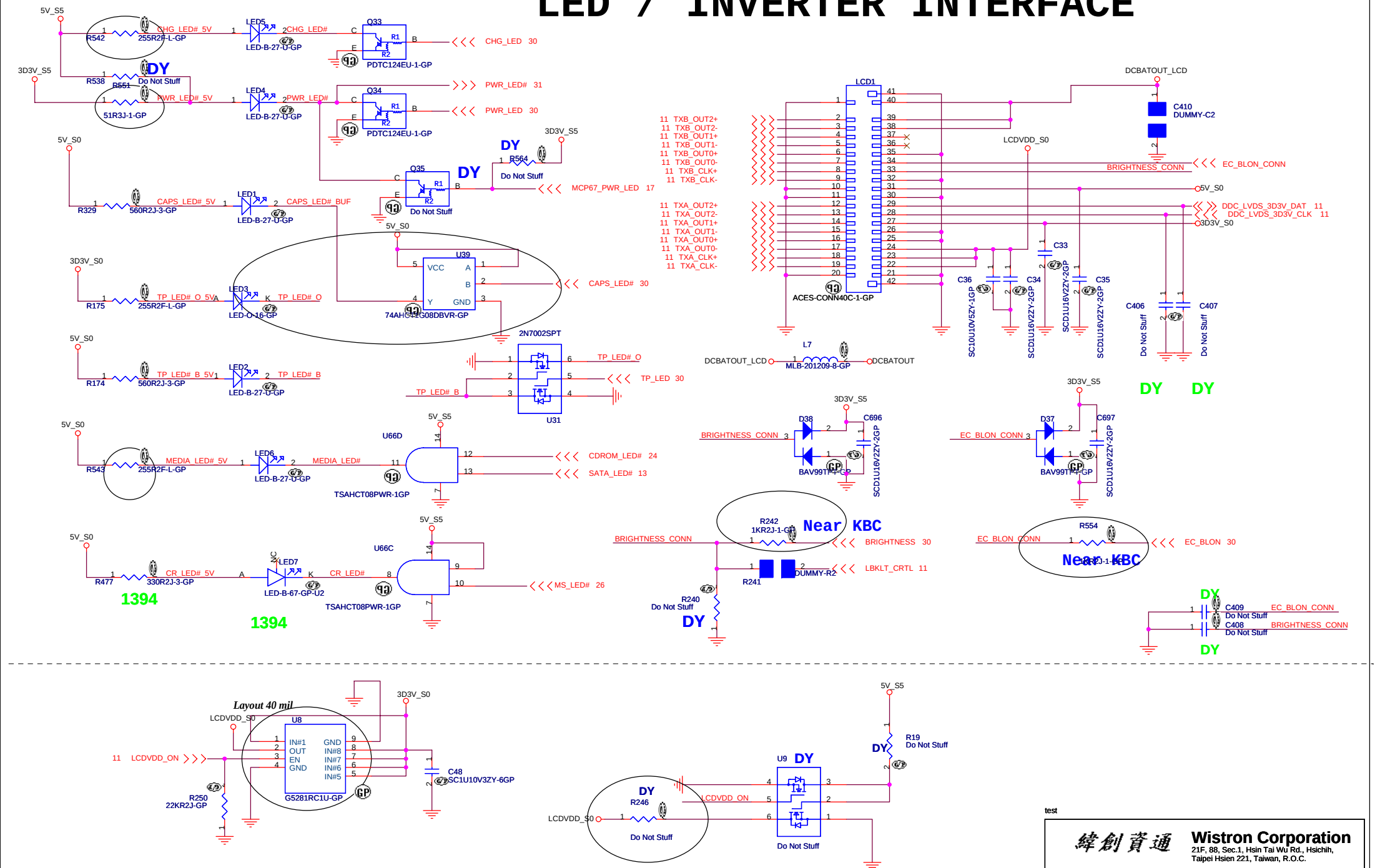

Docking Connector

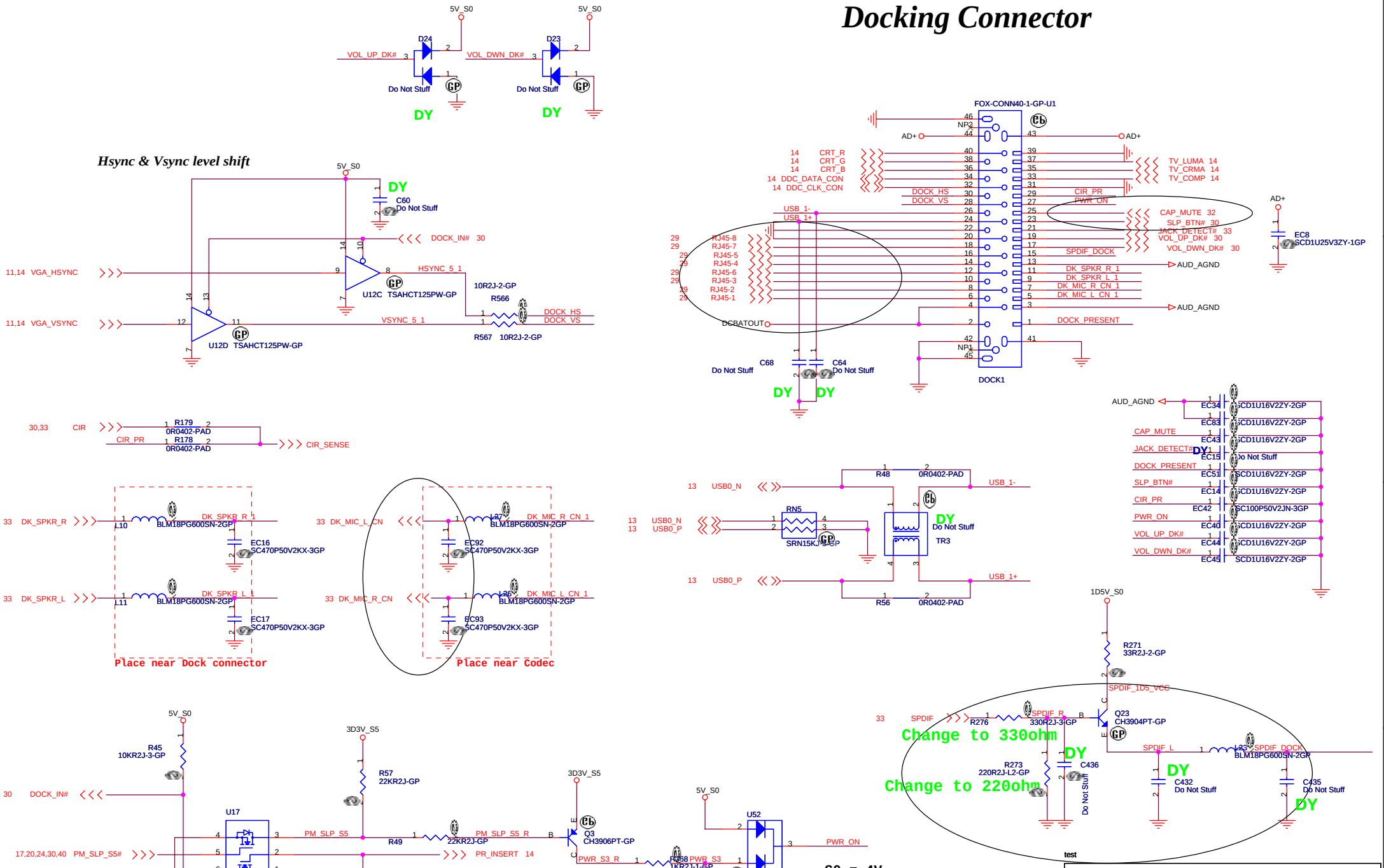

緯創資通	Wistron Corporation 21F, 88, Sec.1, Hsin Tai Wu Rd., Hsichih, Taipei Hsien 221, Taiwan, R.O.C.	
Title	Board to board conn/ Docking	
Size A3	Document Number TIBET	Rev SA
Date: Tuesday, August 14, 2007	Sheet 16 of 44	

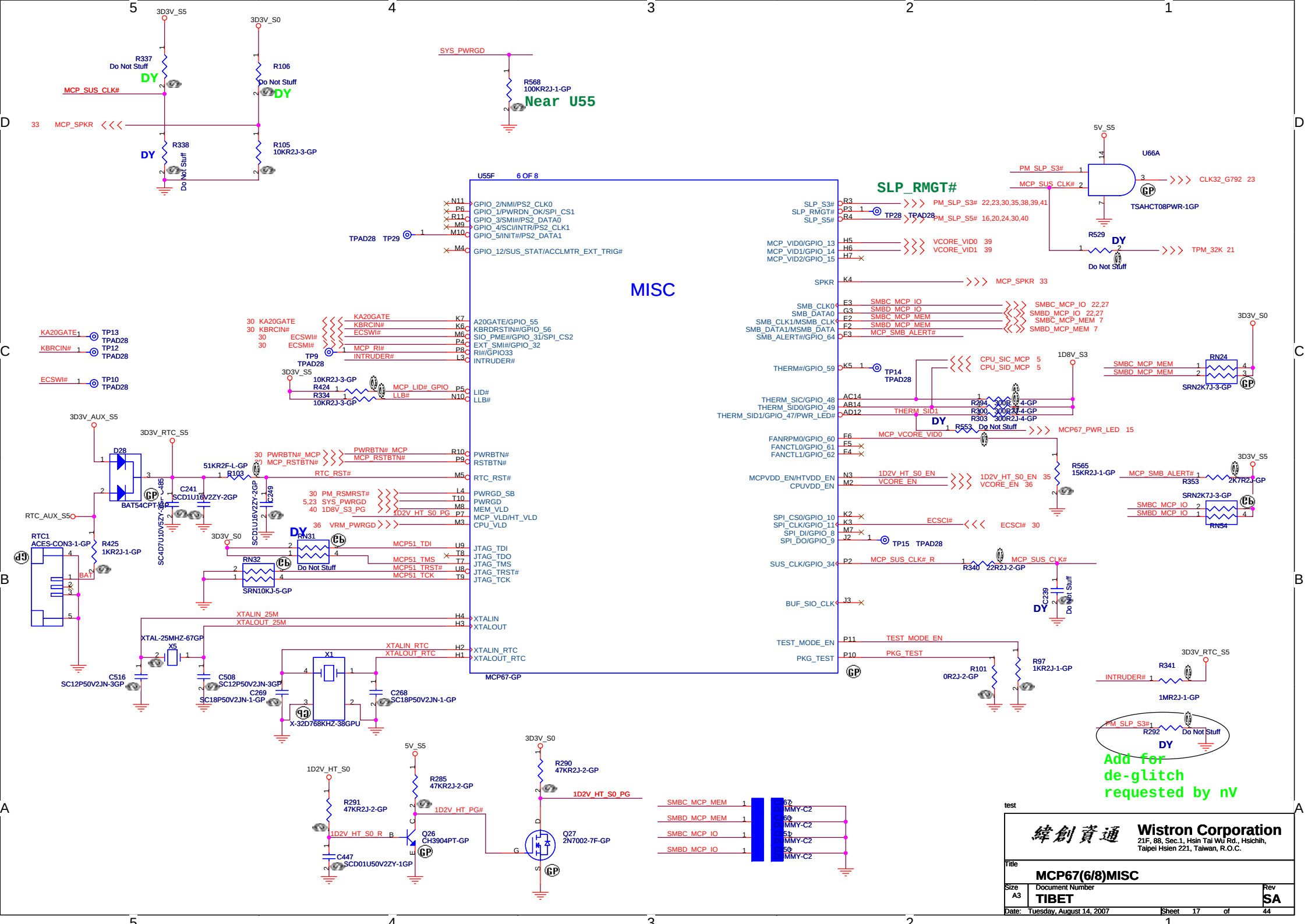
MISC
U55F 6 OF 8
MCP67-GP
SLP_RMGT#
Near U55
DY
Do Not Stuff
Add for de-glitch requested by nV
Wistron Corporation
21F, 88, Sec.1, Hsin Tai Wu Rd., Hsichih, Taipei Hsien 221, Taiwan, R.O.C.
Title
MCP67(6/8)MISC
Size A3
Document Number TIBET
Rev SA
Date: Tuesday, August 14, 2007
Sheet 17 of 44

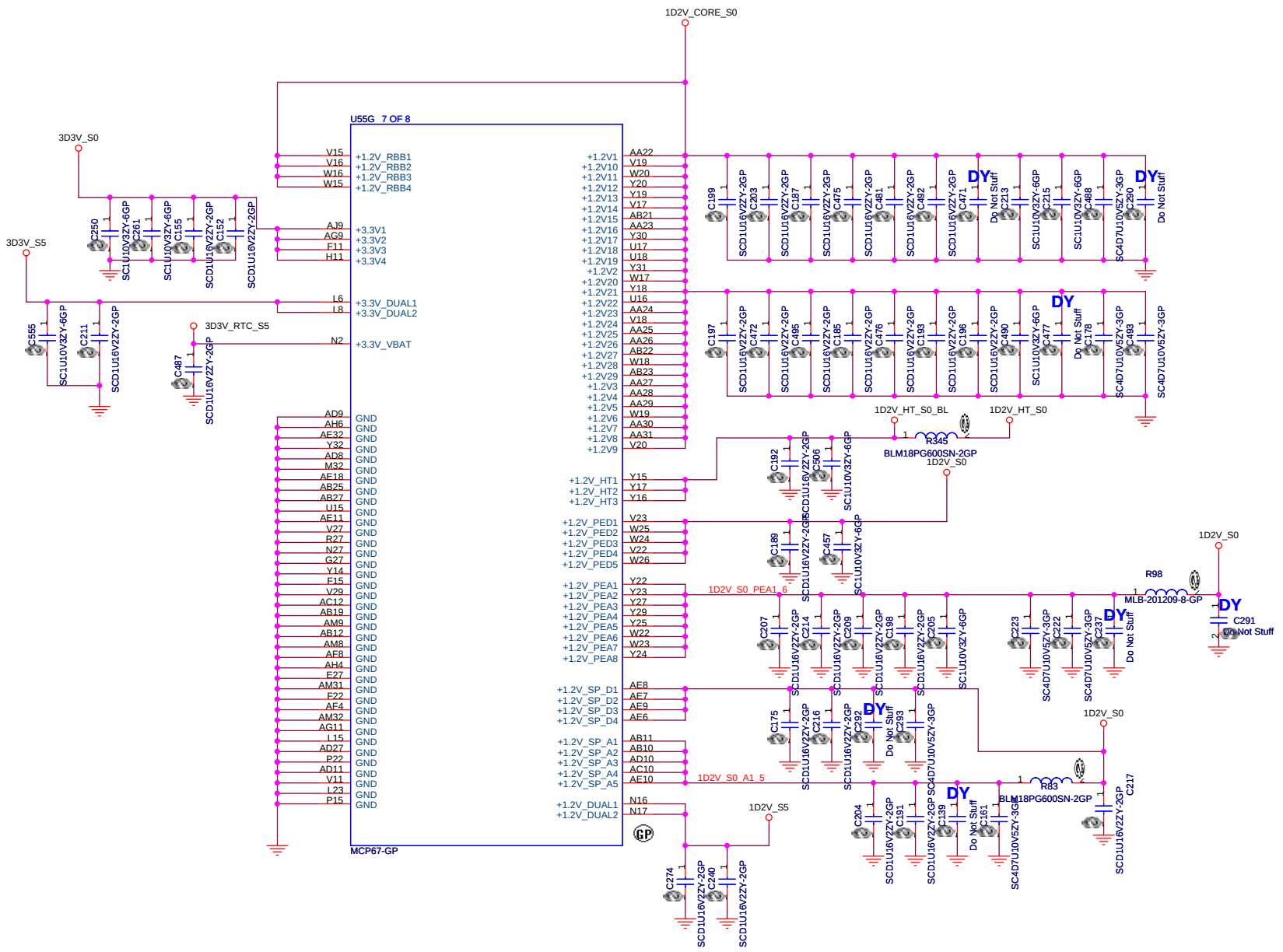

test

Wistron Corporation
21F, 88, Sec.1, Hsin Tai Wu Rd., Hsichih,
Taipei Hsien 221, Taiwan, R.O.C.

Title: **MCP67(7/8)_POWER**

Size	Document Number	Rev
A3	TIBET	SA

Date: Tuesday, August 14, 2007 Sheet 18 of 44

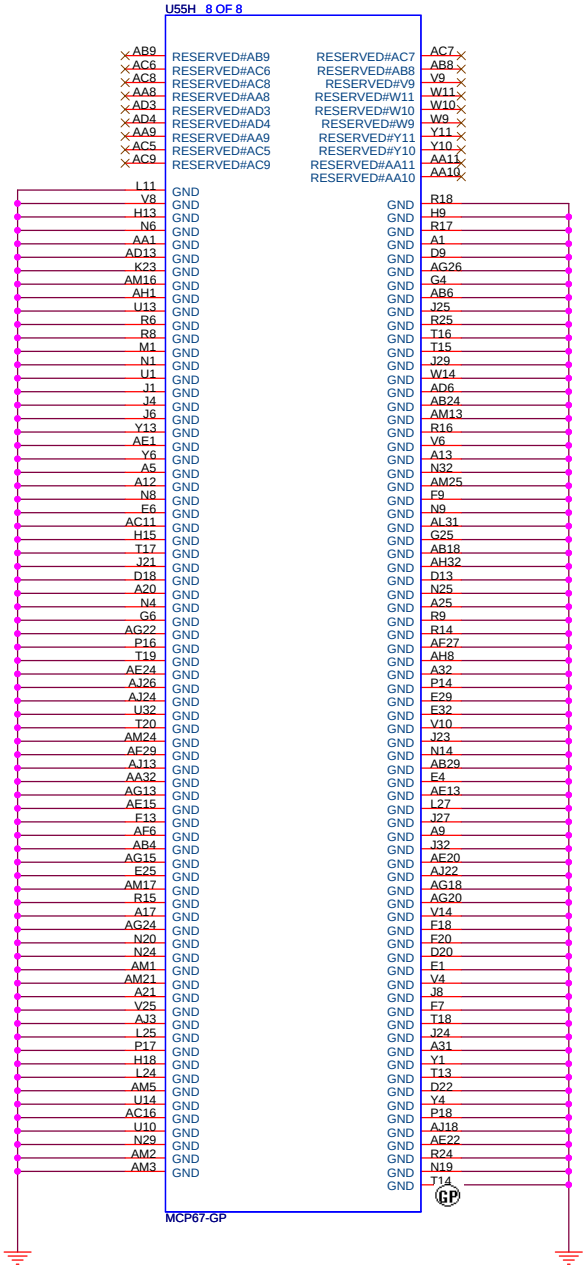

test

Wistron Corporation
21F, 88, Sec.1, Hsin Tai Wu Rd., Hsichih,
Taipei Hsien 221, Taiwan, R.O.C.

Title: **MCP67(8/8)_GND**

Size: A3 | Document Number: **TIBET** | Rev: **SA**

Date: Tuesday, August 14, 2007 | Sheet 19 of 44

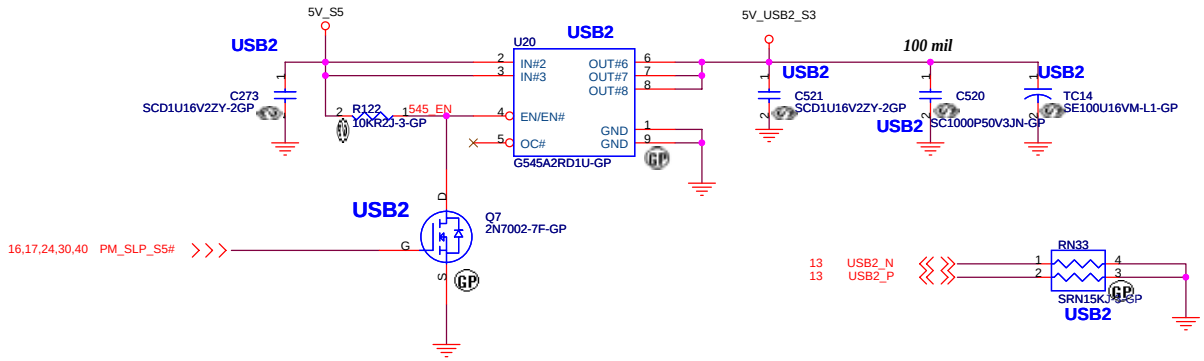

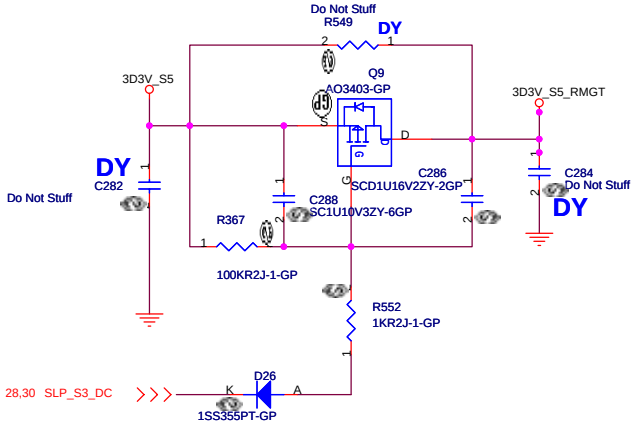

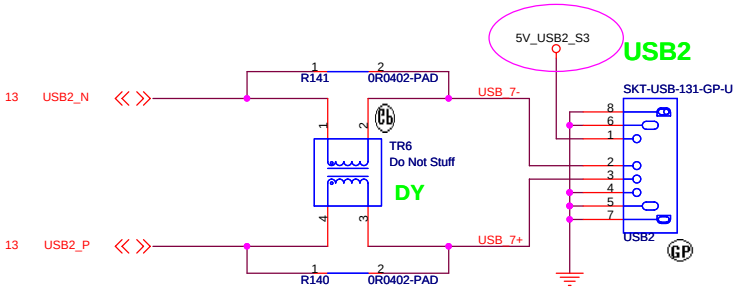

??? Current Rating

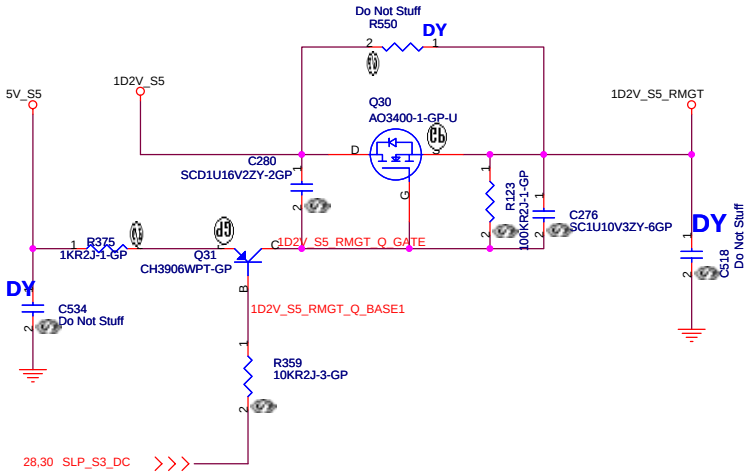

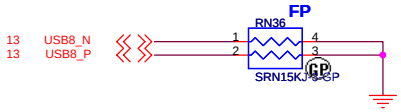

Finger Printer

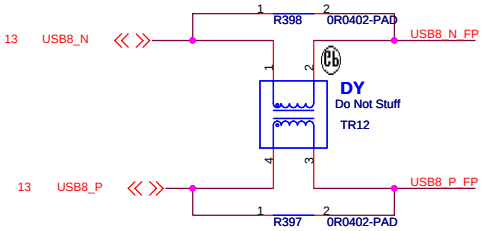

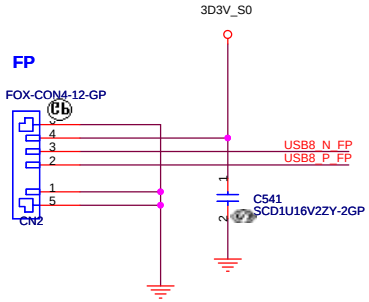

test

Wistron Corporation
21F, 88, Sec.1, Hsin Tai Wu Rd., Hsichih,
Taipei Hsien 221, Taiwan, R.O.C.

Title: **HDMI/FINGER PRINTER**

Size	Document Number	Rev
A3	TIBET	SA

Date: Tuesday, August 14, 2007 Sheet 20 of 44

TPM 1.2

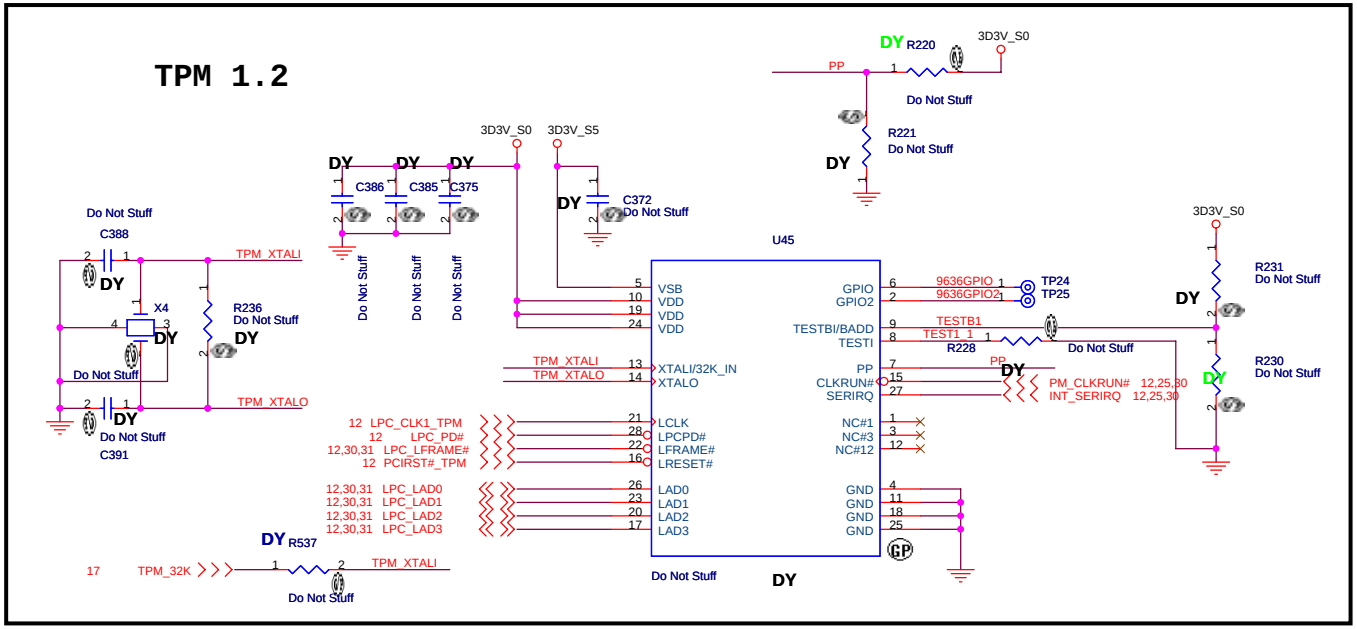

test

Wistron Corporation
21F, 88, Sec.1, Hsin Tai Wu Rd., Hsichih,
Taipei Hsien 221, Taiwan, R.O.C.

Title

Size	Document Number	Rev
A3	TIBET	SA

Date: Tuesday, August 14, 2007 Sheet 21 of 44

NEWCARD Connector

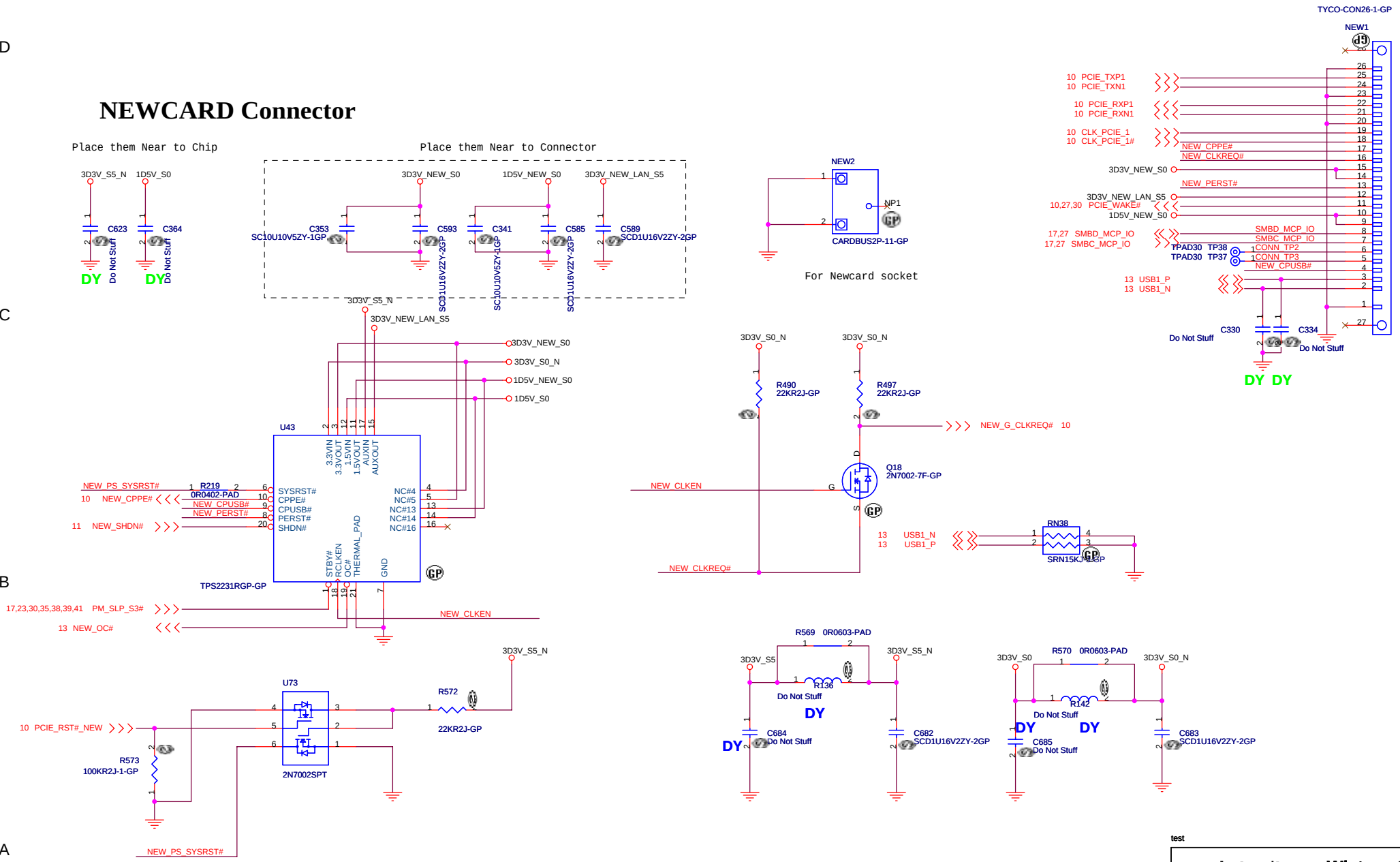

test

緯創資通	**Wistron Corporation** 21F, 88, Sec.1, Hsin Tai Wu Rd., Hsichih, Taipei Hsien 221, Taiwan, R.O.C.	
Title	**NEW CARD**	
Size A3	Document Number **TIBET**	Rev **SA**
Date: Tuesday, August 14, 2007	Sheet 22 of 44	

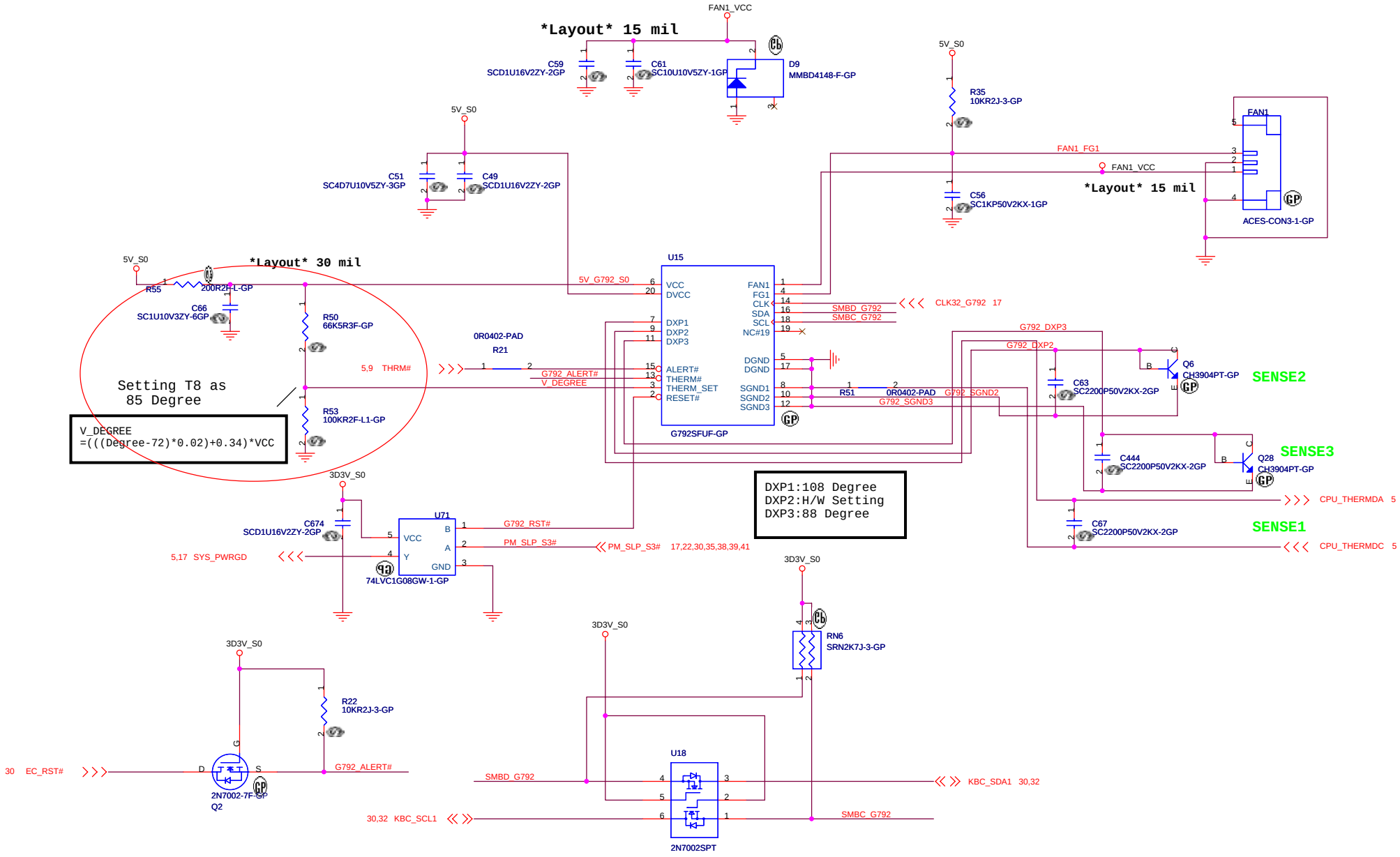

test

緯創資通	**Wistron Corporation** 21F, 88, Sec.1, Hsin Tai Wu Rd., Hsichih, Taipei Hsien 221, Taiwan, R.O.C.
Title	**Thermal/Fan Controllor**
Size: Custom	Document Number: **TIBET**
Rev	**SA**
Date: Tuesday, August 14, 2007	Sheet 23 of 44

SATA HD Connector

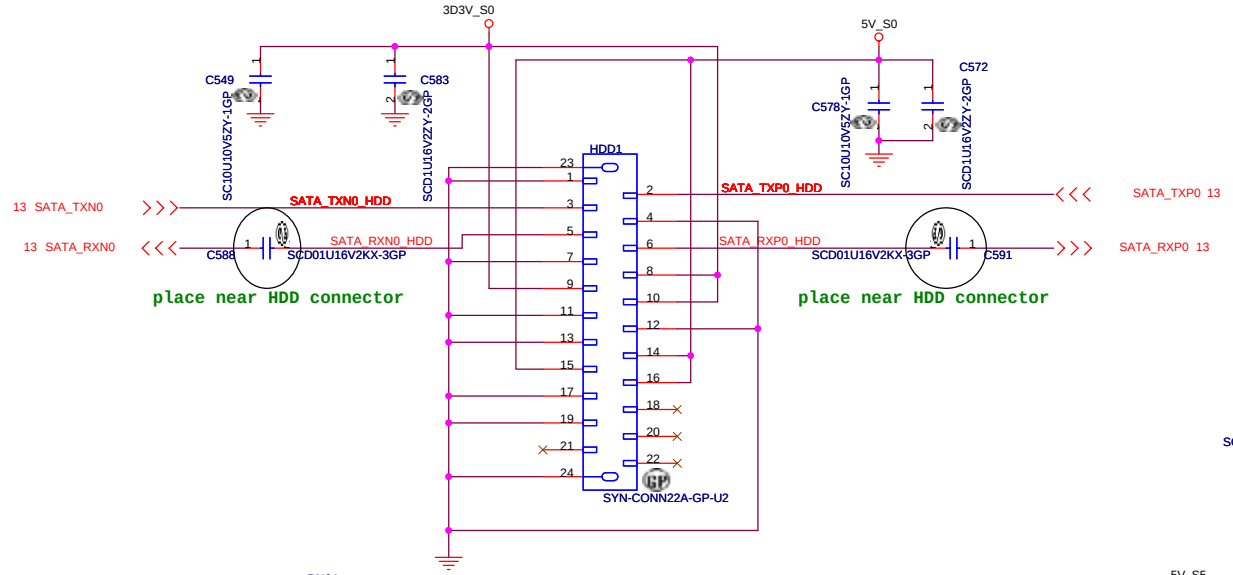

CD-ROM CONNECTOR

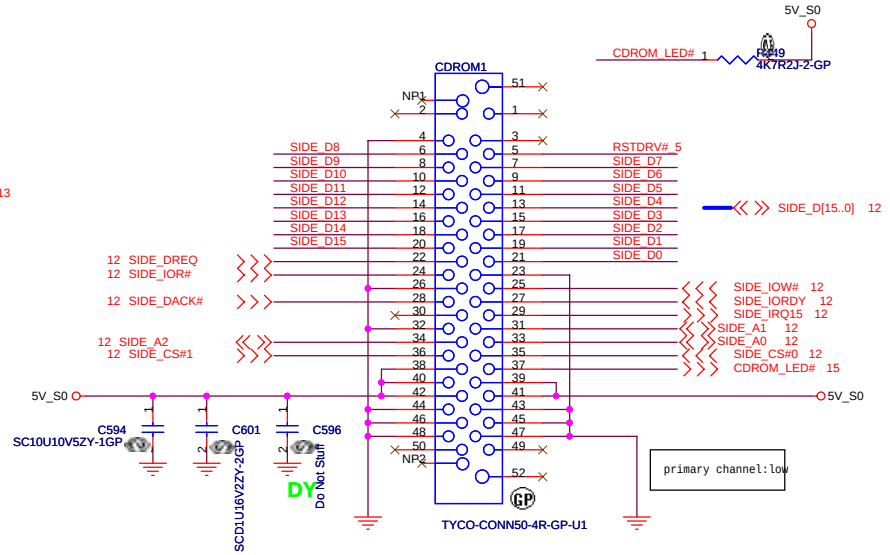

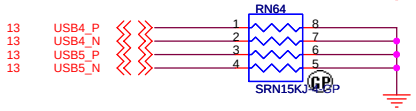

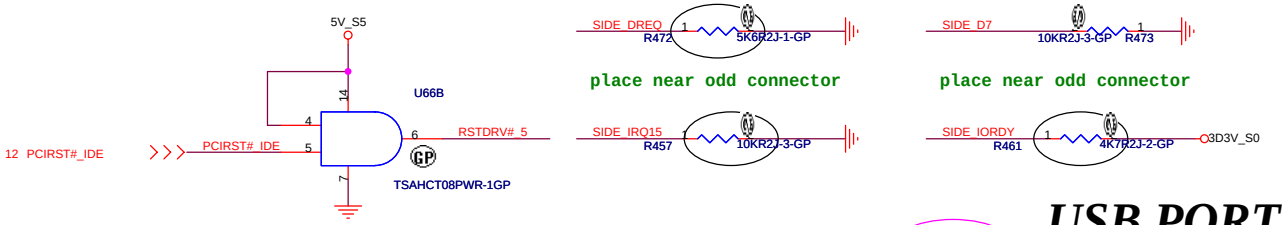

USB PORT

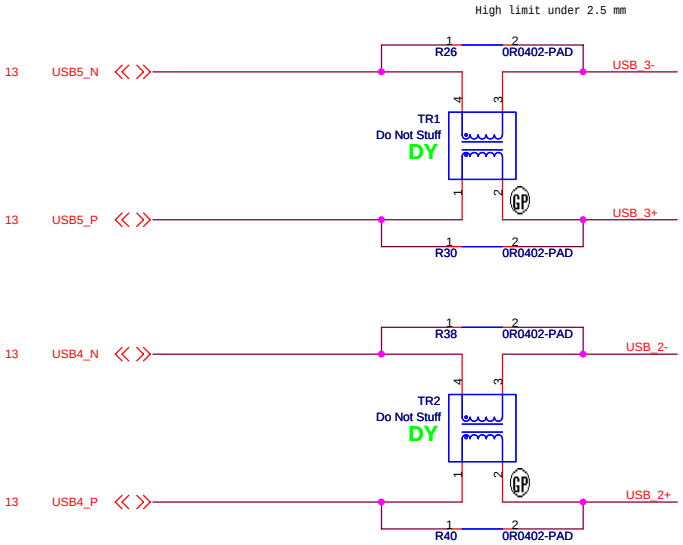

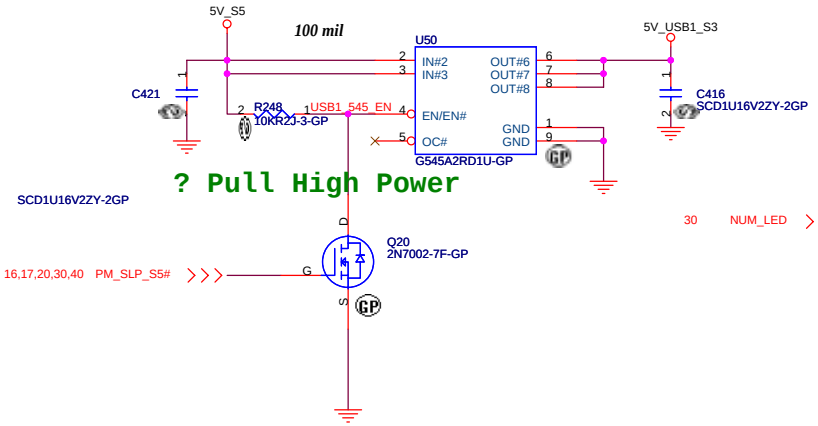

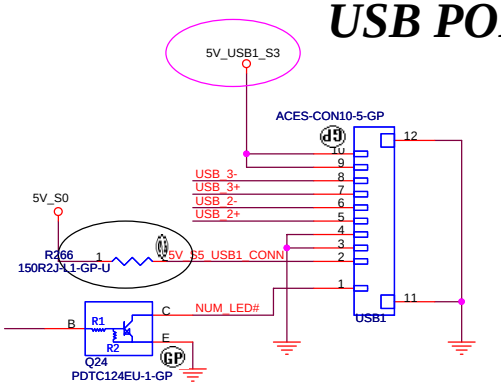

test

緯創資通	**Wistron Corporation** 21F, 88, Sec.1, Hsin Tai Wu Rd., Hsichih, Taipei Hsien 221, Taiwan, R.O.C.	
Title	**HD/CDROM**	
Size A3	Document Number **TIBET**	Rev **SA**
Date: Tuesday, August 14, 2007	Sheet 24 of 44	

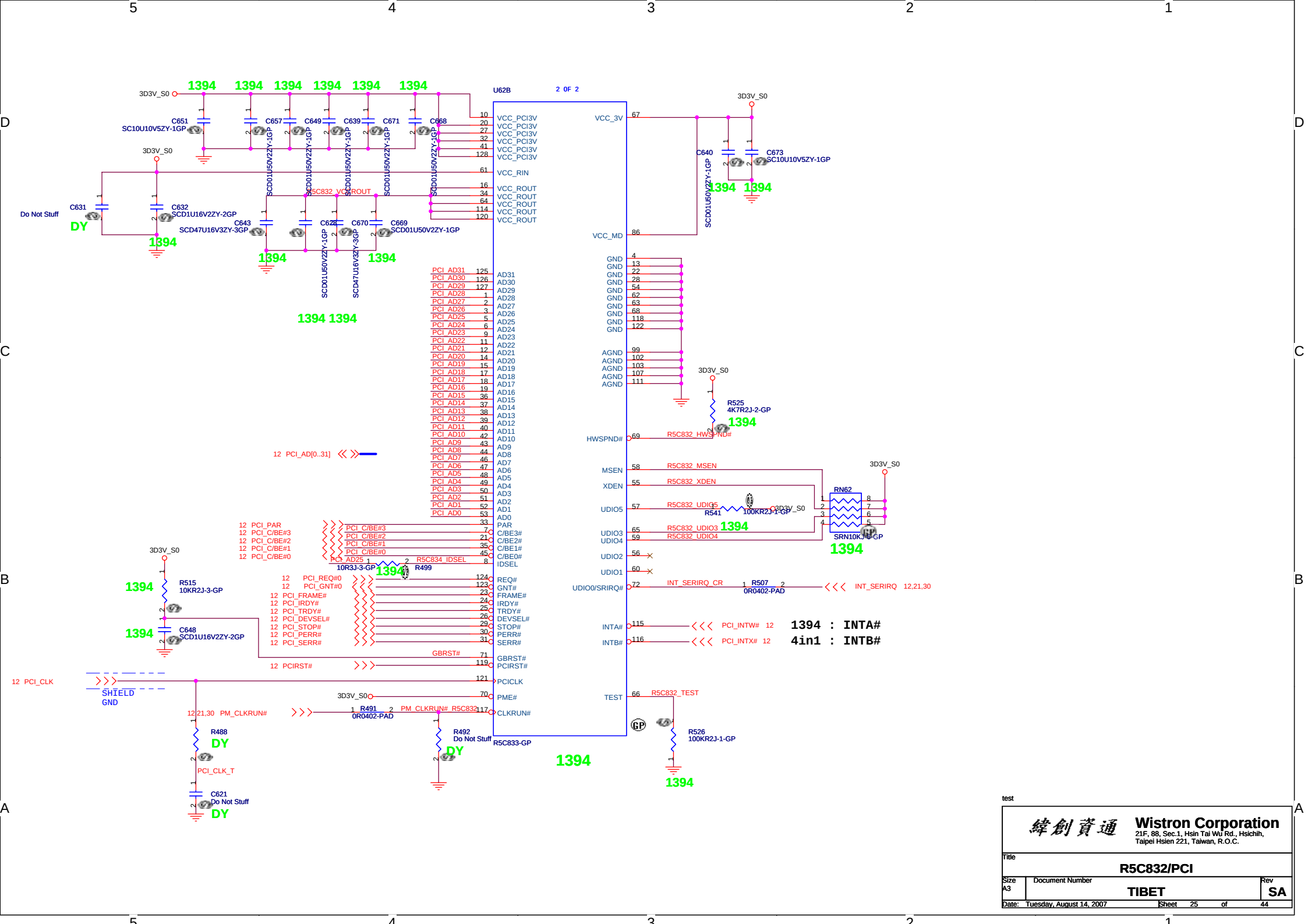

test

緯創資通	Wistron Corporation 21F, 88, Sec.1, Hsin Tai Wu Rd., Hsichih, Taipei Hsien 221, Taiwan, R.O.C.	
Title	R5C832/PCI	
Size A3	Document Number TIBET	Rev SA
Date: Tuesday, August 14, 2007	Sheet 25 of 44	

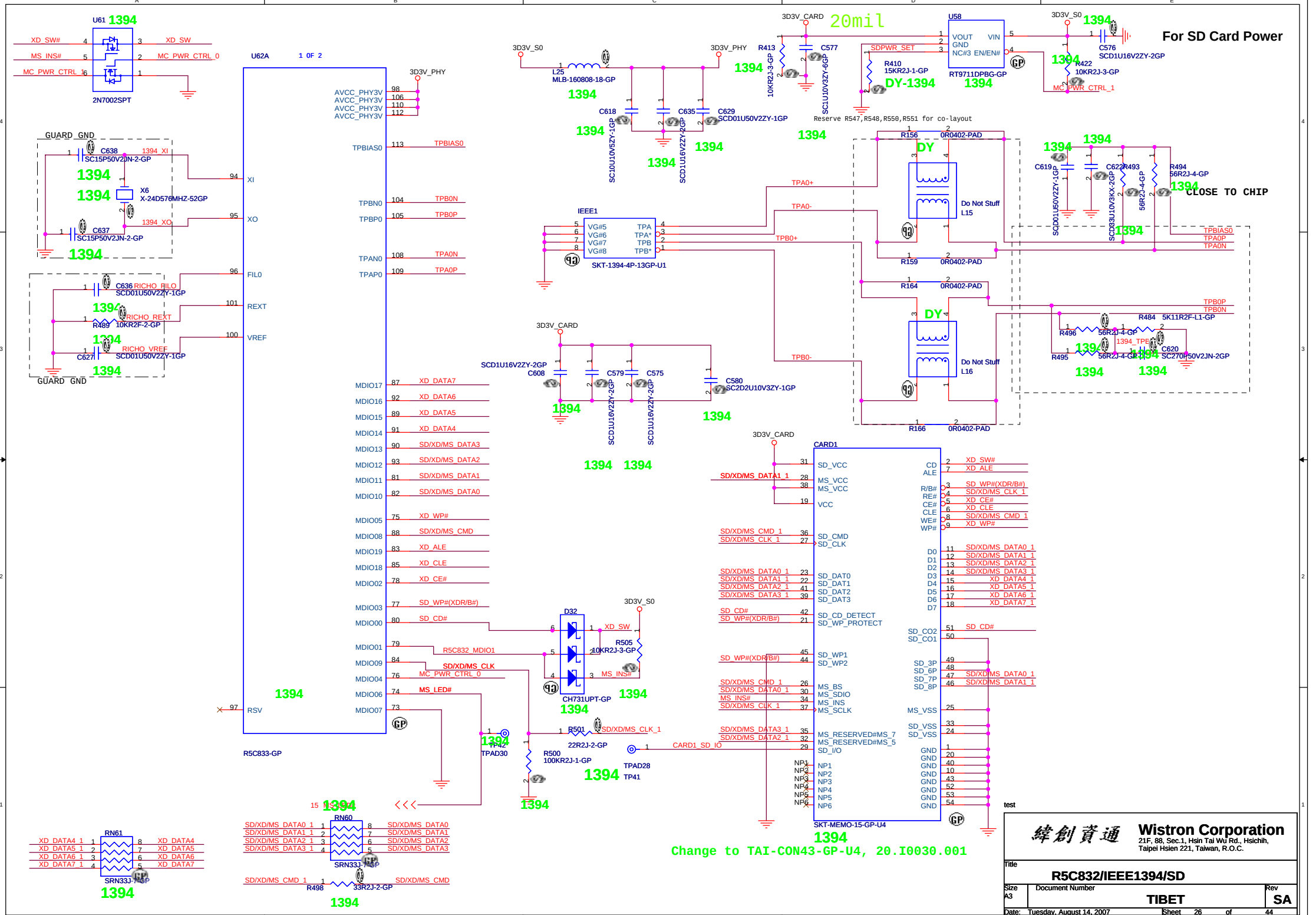
For SD Card Power
U61
2N7002SPT
XD_SW#
MS_INS#
MC_PWR_CTRL_0
XD_SW
MC_PWR_CTRL_1
U62A
1 0F 2
R5C833-GP
3D3V_PHY
AVCC_PHY3V
TPBIAS0
TPBN0
TPBP0
TPAN0
TPAP0
XI
XO
FIL0
REXT
VREF
RSV
GUARD_GND
C638
SC15P50V2JN-2-GP
X6
X-24D576MHZ-52GP
C637
SC15P50V2JN-2-GP
C636
SCD01U50V2ZY-1GP
R489
10KR2F-2-GP
C627
SCD01U50V2ZY-1GP
RICHO_FILO
RICHO_REXT
RICHO_VREF
MDIO17
MDIO16
MDIO15
MDIO14
MDIO13
MDIO12
MDIO11
MDIO10
MDIO05
MDIO08
MDIO19
MDIO18
MDIO02
MDIO03
MDIO00
MDIO01
MDIO09
MDIO04
MDIO06
MDIO07
XD_DATA7
XD_DATA6
XD_DATA5
XD_DATA4
SD/XD/MS_DATA3
SD/XD/MS_DATA2
SD/XD/MS_DATA1
SD/XD/MS_DATA0
XD_WP#
SD/XD/MS_CMD
XD_ALE
XD_CLE
XD_CE#
SD_WP#(XDR/B#)
SD_CD#
R5C832_MDIO1
SD/XD/MS_CLK
MC_PWR_CTRL_0
MS_LED#
L25
MLB-160808-18-GP
C618
C635
C629
SCD01U50V2ZY-1GP
SCD10U10V5ZY-1GP
SCD1U16V2ZY-2GP
R413
10KR2J-3-GP
C577
SC1U10V3ZY-6GP
SDPWR_SET
R410
15KR2J-1-GP
DY-1394
U58
VOUT
VIN
GND
NC#3
EN/EN#
RT9711DPBG-GP
C576
SCD1U16V2ZY-2GP
R422
10KR2J-3-GP
Reserve R547,R548,R550,R551 for co-layout
R156
0R0402-PAD
R159
0R0402-PAD
R164
0R0402-PAD
R166
0R0402-PAD
DY
Do Not Stuff
L15
L16
TPA0+
TPA0-
TPB0+
TPB0-
IEEE1
VG#5
VG#6
VG#7
VG#8
TPA
TPA*
TPB
TPB*
SKT-1394-4P-13GP-U1
C619
SCD01U50V2ZY-1GP
C622
SCD33U10V3KX-2GP
R493
56R2J-4-GP
R494
56R2J-4-GP
CLOSE TO CHIP
TPBIAS0
TPA0P
TPA0N
TPB0P
TPB0N
R484
5K11R2F-L1-GP
R496
56R2J-4-GP
R495
56R2J-4-GP
1394_TPB
C620
SC270P50V2JN-2GP
C608
SCD1U16V2ZY-2GP
C579
SCD1U16V2ZY-2GP
C575
SCD1U16V2ZY-2GP
C580
SC2D2U10V3ZY-1GP
D32
CH731UPT-GP
R505
10KR2J-3-GP
R501
22R2J-2-GP
R500
100KR2J-1-GP
TP42
TPAD30
TPAD28
TP41
CARD1
SD_VCC
MS_VCC
VCC
SD_CMD
SD_CLK
SD_DAT0
SD_DAT1
SD_DAT2
SD_DAT3
SD_CD_DETECT
SD_WP_PROTECT
SD_WP1
SD_WP2
MS_BS
MS_SDIO
MS_INS
MS_SCLK
MS_RESERVED#MS_7
MS_RESERVED#MS_5
SD_I/O
NP1
NP2
NP3
NP4
NP5
NP6
CD
ALE
R/B#
RE#
CE#
CLE
WE#
WP#
D0
D1
D2
D3
D4
D5
D6
D7
SD_CO2
SD_CO1
SD_3P
SD_6P
SD_7P
SD_8P
MS_VSS
SD_VSS
GND
CARD1_SD_IO
SKT-MEMO-15-GP-U4
RN61
SRN33J-7-GP
RN60
SRN33J-7-GP
R498
33R2J-2-GP
SD/XD/MS_CMD
Change to TAI-CON43-GP-U4, 20.I0030.001
test
Wistron Corporation
21F, 88, Sec.1, Hsin Tai Wu Rd., Hsichih,
Taipei Hsien 221, Taiwan, R.O.C.
Title
R5C832/IEEE1394/SD
Size
A3
Document Number
TIBET
Rev
SA
Date: Tuesday, August 14, 2007
Sheet 26 of 44

Mini Card Connector 2

Wireless Card

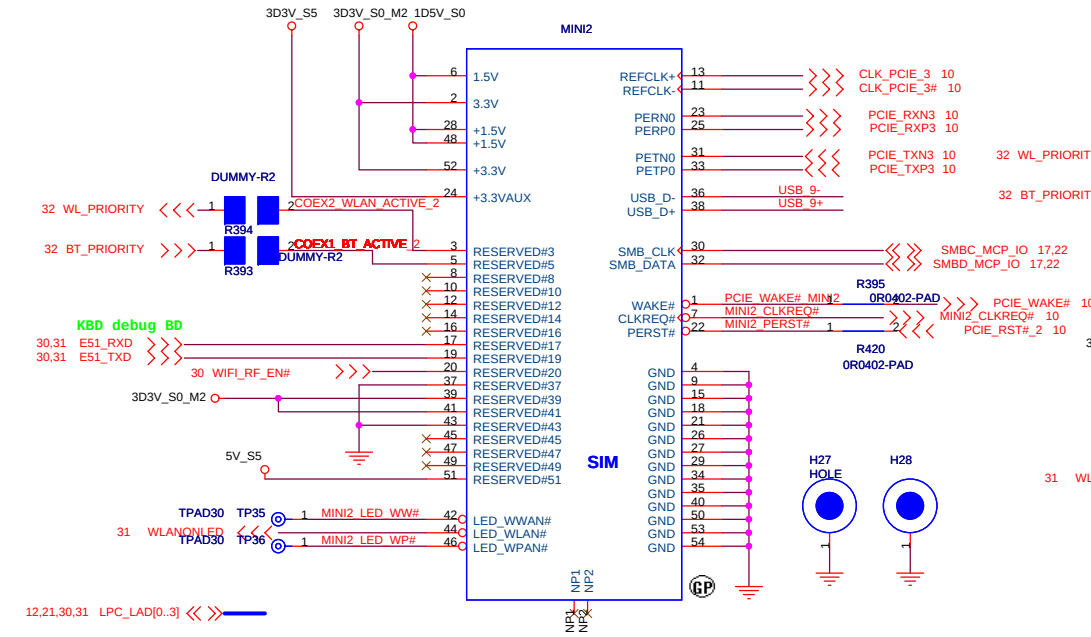

Mini Card Connector 1

WWAN

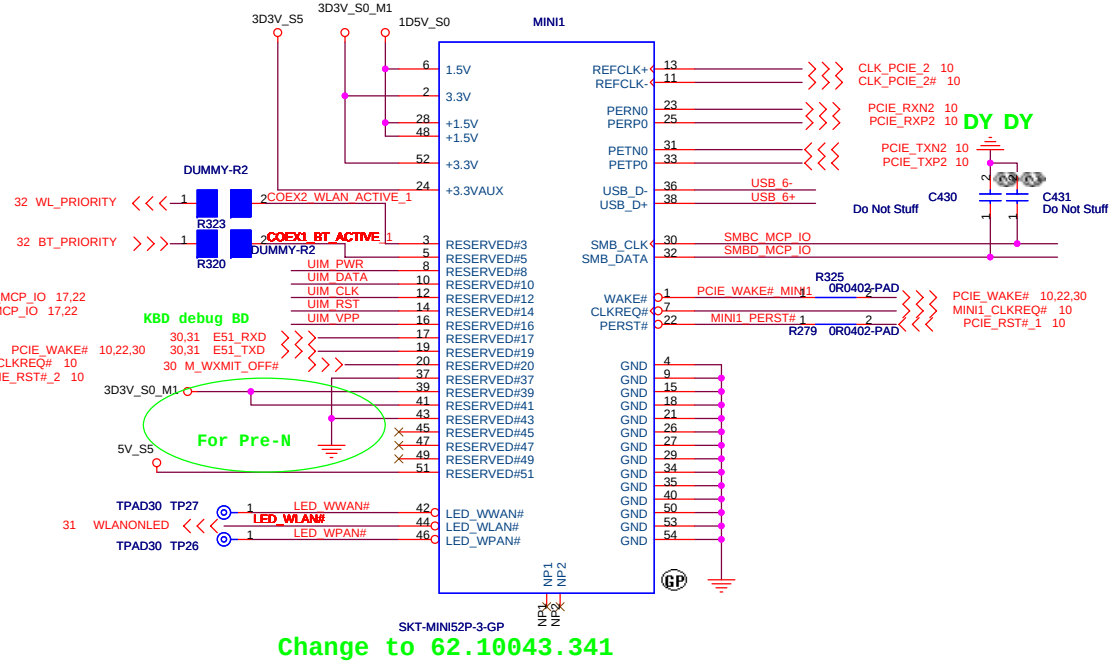

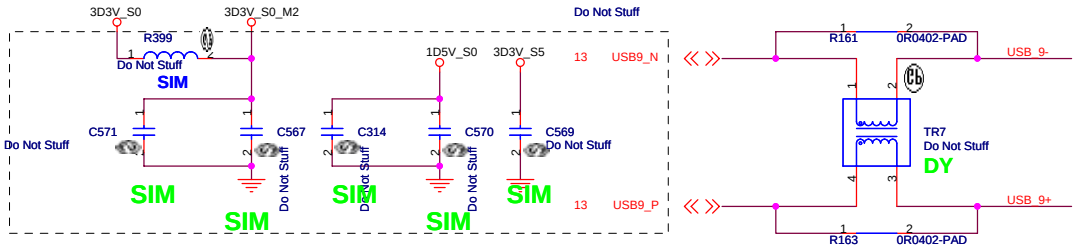

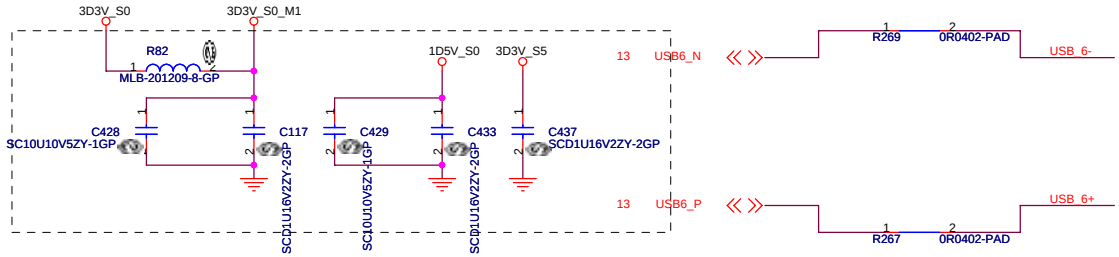

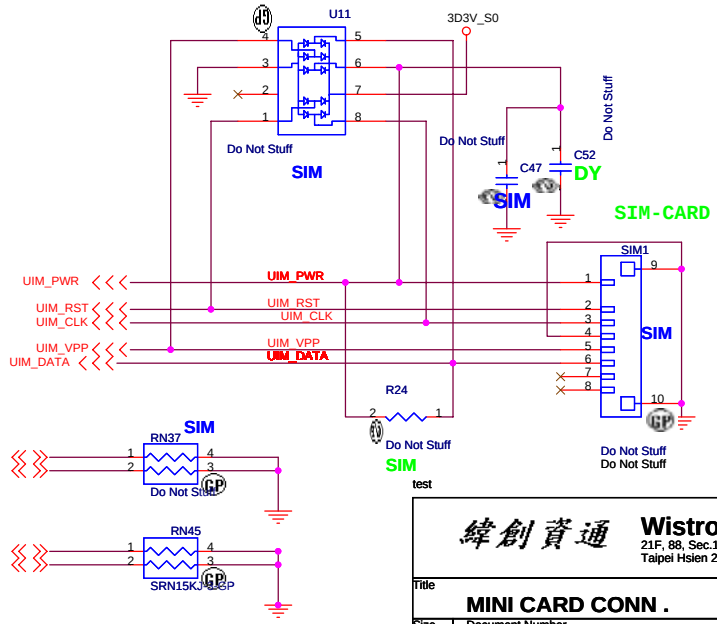

test

緯創資通	**Wistron Corporation** 21F, 88, Sec.1, Hsin Tai Wu Rd., Hsichih, Taipei Hsien 221, Taiwan, R.O.C.	
Title	**MINI CARD CONN .**	
Size A3	Document Number **TIBET**	Rev **SA**
Date: Tuesday, August 14, 2007	Sheet 27 of 44	

Hardware Configuration: See config _0:4

1. PHY address:00001
2. ENA_XC:Enable Auto-Crossover
3. RGMII_TX:Transmit clock not internally delayed
4. RGMII_RX:Receive clock transition when data transitions
5. Advertise all capabilities

E1116 use external 2.5V single power supply.
1.8V create by PNP and 1.2V use internal reg.

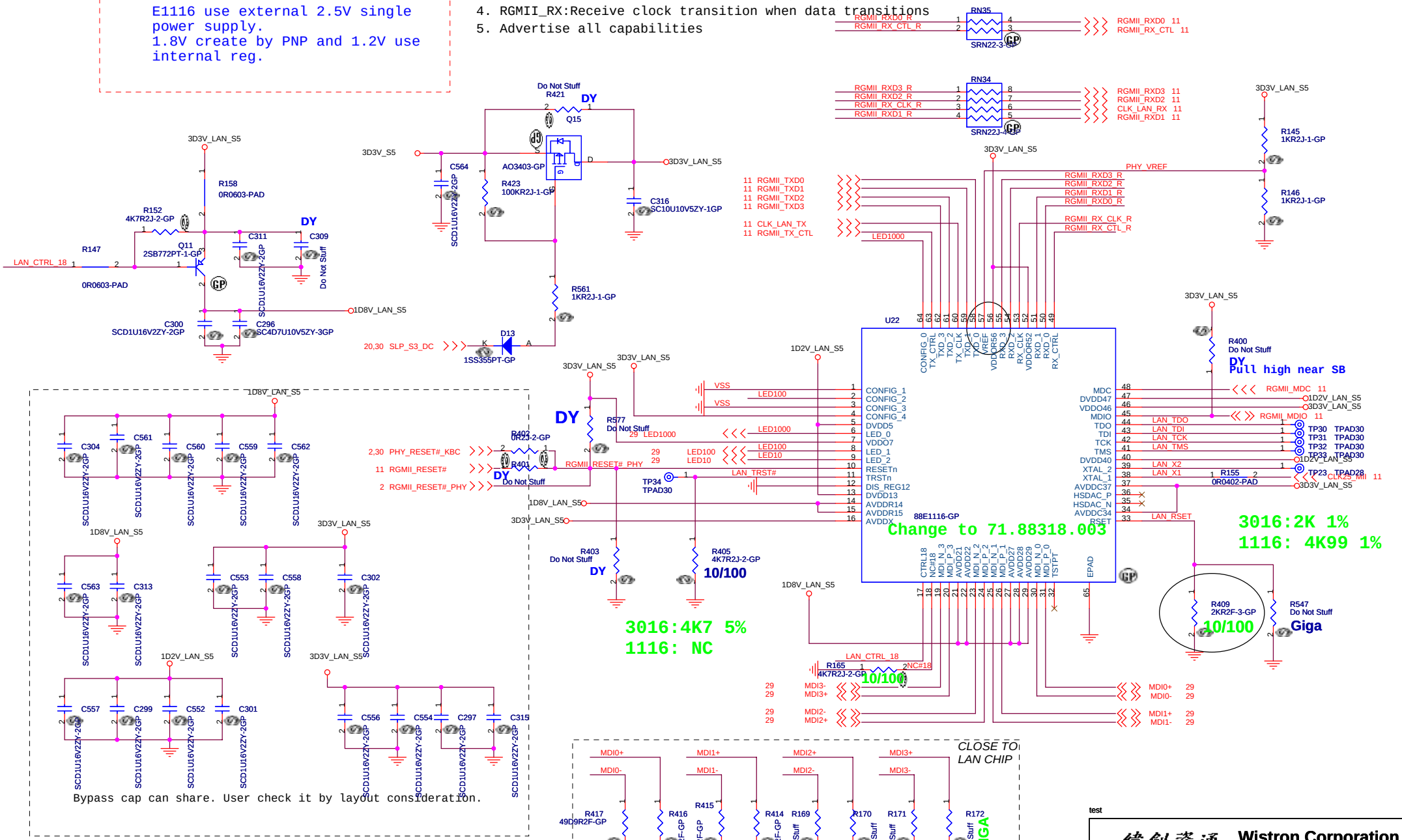

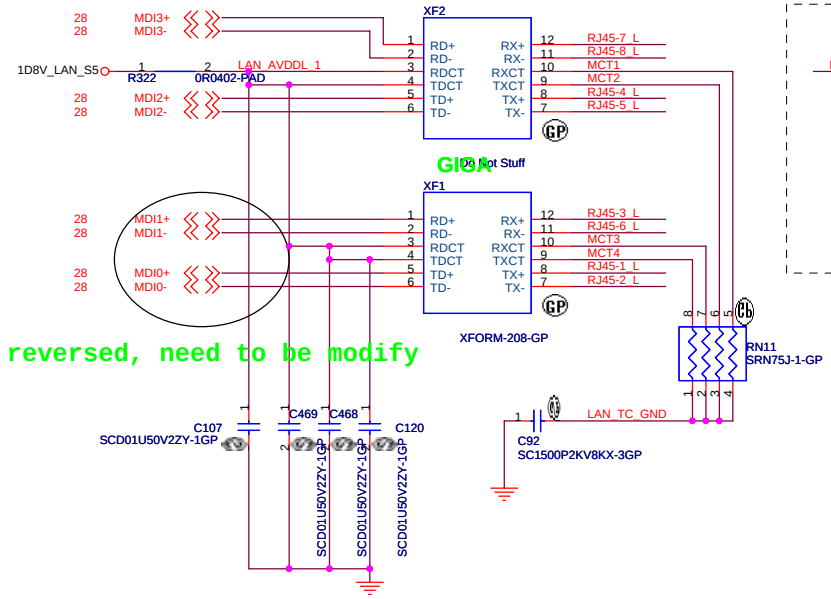

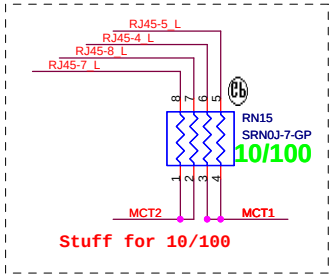

1.route on bottom as differential pairs.
2.Tx+/Tx- are pairs. Rx+/Rx- are pairs.
3.No vias, No 90 degree bends.
4.pairs must be equal lengths.
5.6mil trace width,12mil separation.
6.36mil between pairs and any other trace.
7.Must not cross ground moat,except RJ-45 moat.

GREEN: LINK 10/100 Mbps
YELLOW: TX/RX ACTIVITY
ORANGE: LINK 1000Mbps

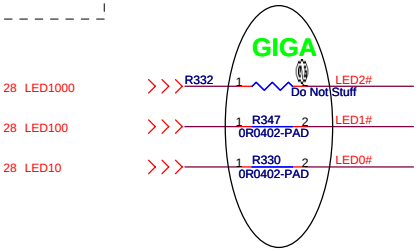

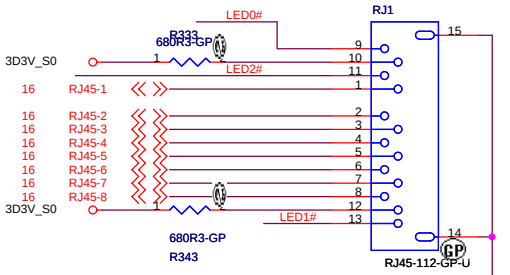

PIN09 : GREEN
PIN11 : ORANGE
PIN13 : YELLOW

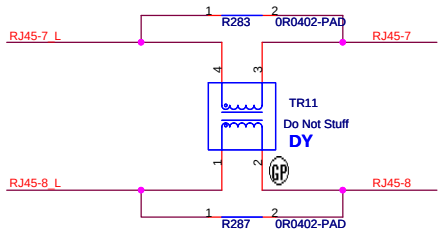

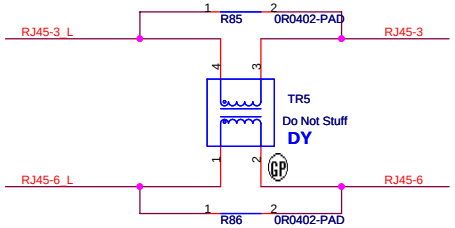

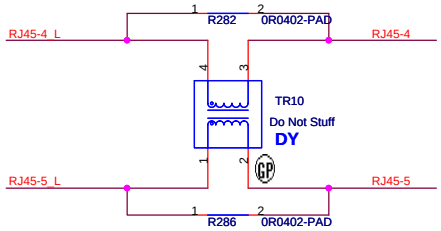

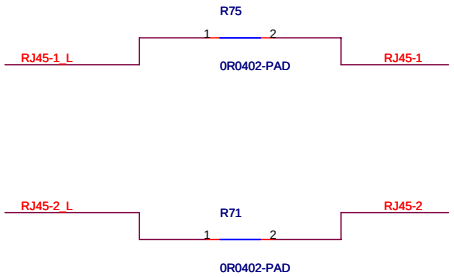

test

緯創資通	**Wistron Corporation** 21F, 88, Sec.1, Hsin Tai Wu Rd., Hsichih, Taipei Hsien 221, Taiwan, R.O.C.	
Title	**LAN CONN**	
Size A3	Document Number **TIBET**	Rev **SA**
Date: Tuesday, August 14, 2007	Sheet 29 of 44	

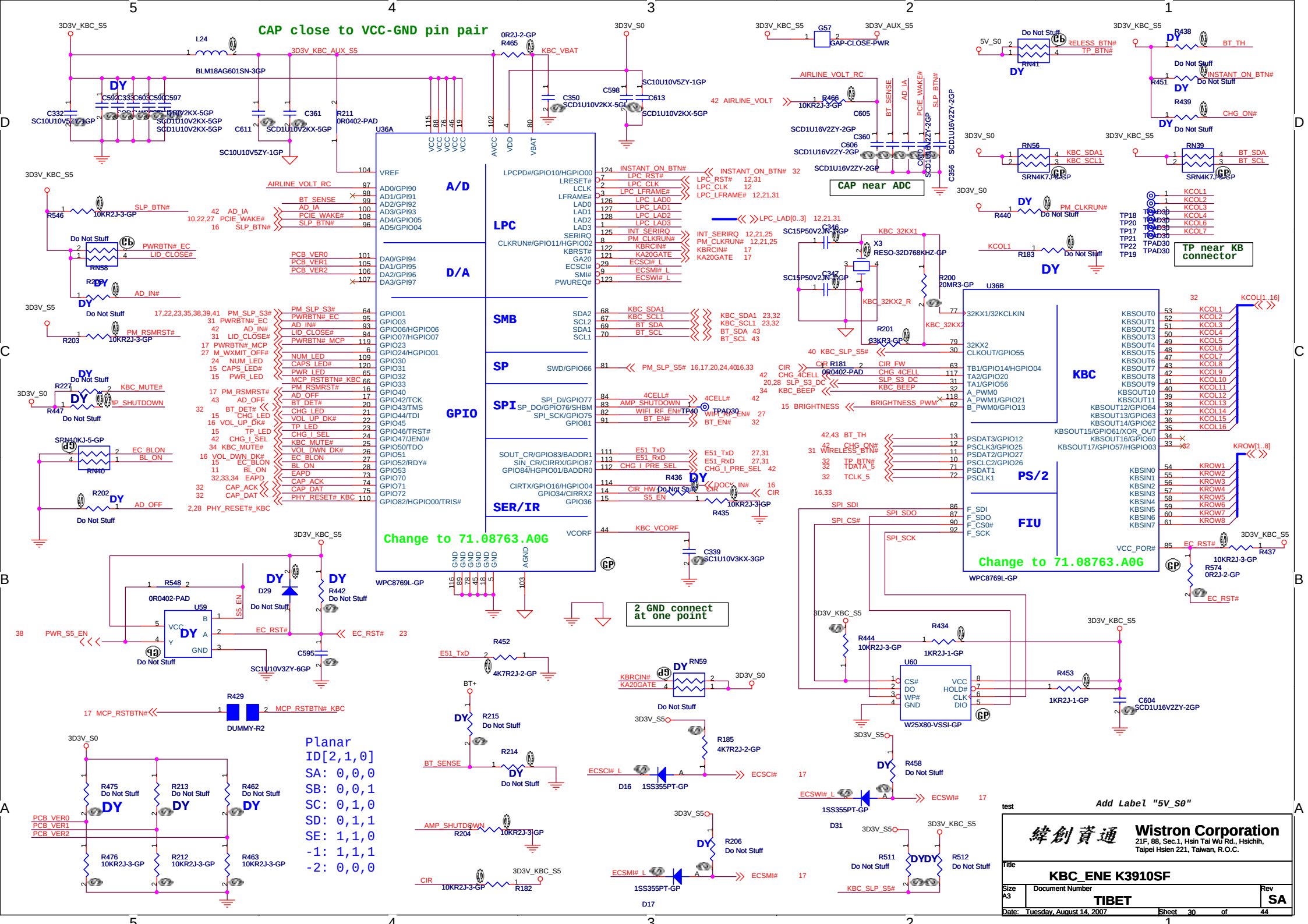
CAP close to VCC-GND pin pair
U36A
A/D
LPC
D/A
SMB
SP
SPI
GPIO
SER/IR
Change to 71.08763.A0G
WPC8769L-GP
2 GND connect at one point
CAP near ADC
TP near KB connector
U36B
KBC
PS/2
FIU
Change to 71.08763.A0G
WPC8769L-GP
U59
U60
W25X80-VSSI-GP
Planar
ID[2,1,0]
SA: 0,0,0
SB: 0,0,1
SC: 0,1,0
SD: 0,1,1
SE: 1,1,0
-1: 1,1,1
-2: 0,0,0
Add Label "5V_S0"
Wistron Corporation
21F, 88, Sec.1, Hsin Tai Wu Rd., Hsichih,
Taipei Hsien 221, Taiwan, R.O.C.
Title
KBC_ENE K3910SF
Size A3
Document Number
TIBET
Rev SA
Date: Tuesday, August 14, 2007
Sheet 30 of 44

GOLDEN FINGER FOR DEBUG BOARD

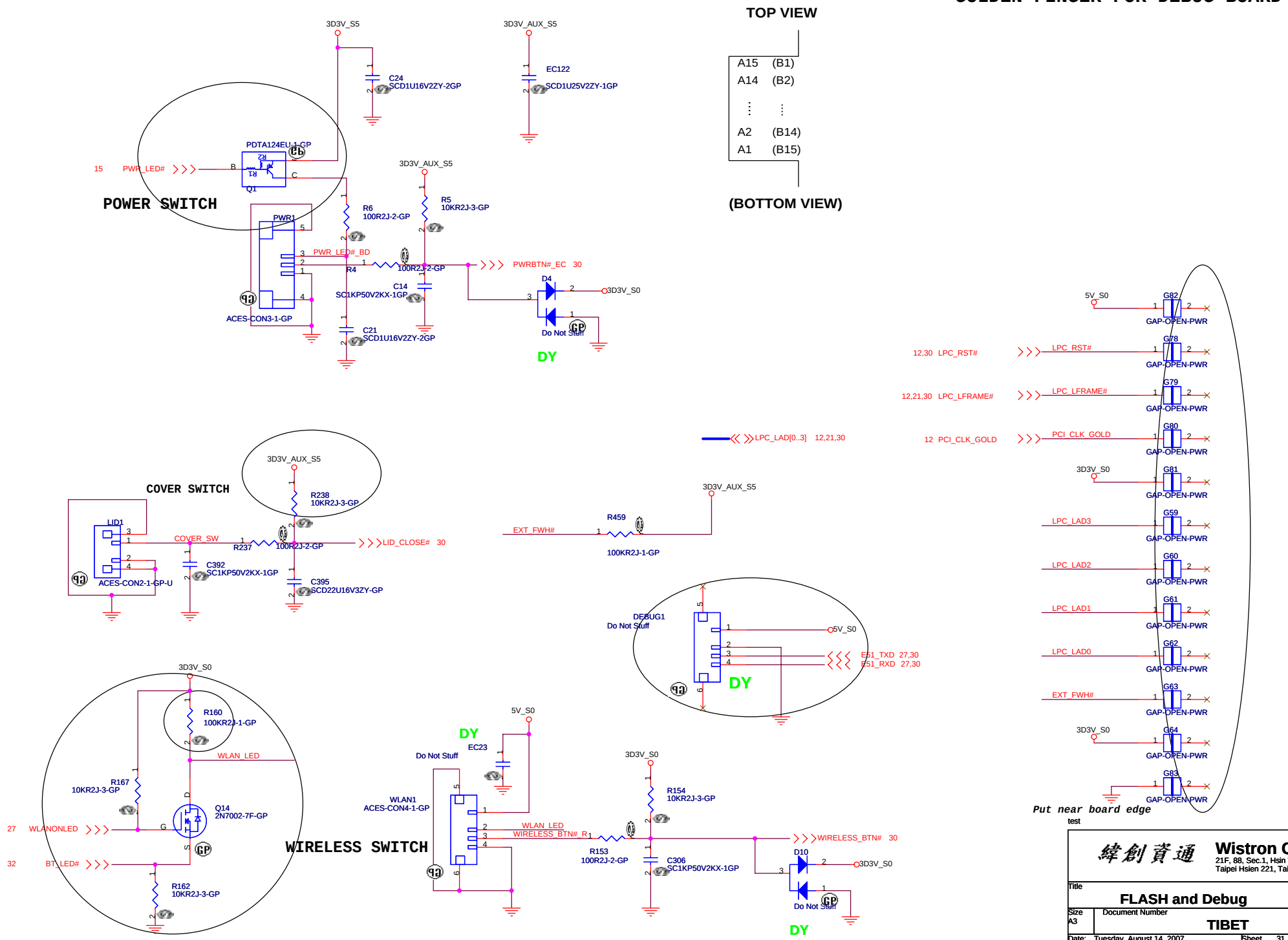

緯創資通	**Wistron Corporation** 21F, 88, Sec.1, Hsin Tai Wu Rd., Hsichih, Taipei Hsien 221, Taiwan, R.O.C.
Title	**FLASH and Debug**
Size A3	Document Number **TIBET**
Rev	**SA**
Date: Tuesday, August 14, 2007	Sheet 31 of 44

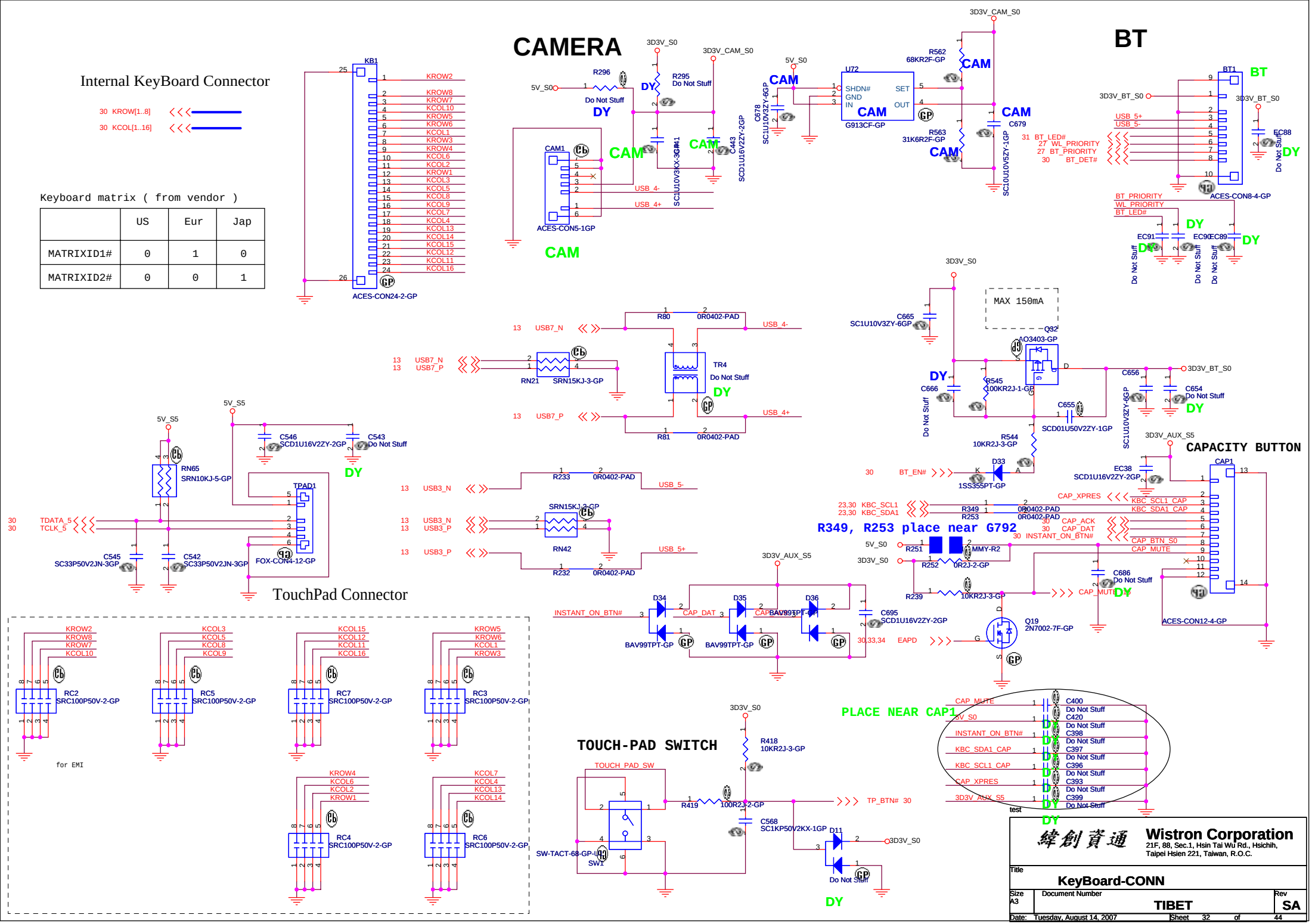
Internal KeyBoard Connector
30 KROW[1..8]
30 KCOL[1..16]
Keyboard matrix (from vendor)
US Eur Jap
MATRIXID1# 0 1 0
MATRIXID2# 0 0 1
KB1
ACES-CON24-2-GP
CAMERA
CAM1
ACES-CON5-1GP
R296
R295
Do Not Stuff
DY
CAM
USB_4-
USB_4+
U72
SHDN#
GND
IN
SET
OUT
G913CF-GP
R562
68KR2F-GP
R563
31K6R2F-GP
C678
SC1U10V3ZY-6GP
C679
SC10U10V5ZY-1GP
C443
SCD1U16V2ZY-2GP
BT
BT1
ACES-CON8-4-GP
3D3V_BT_S0
USB_5+
USB_5-
BT_LED#
WL_PRIORITY
BT_PRIORITY
BT_DET#
EC88
EC91
EC90
EC89
R80
R81
0R0402-PAD
TR4
RN21
SRN15KJ-3-GP
USB7_N
USB7_P
C665
SC1U10V3ZY-6GP
MAX 150mA
Q32
AO3403-GP
R545
100KR2J-1-GP
C666
C656
C654
C655
SCD01U50V2ZY-1GP
R544
10KR2J-3-GP
D33
1SS355PT-GP
BT_EN#
3D3V_AUX_S5
CAPACITY BUTTON
CAP1
EC38
SCD1U16V2ZY-2GP
ACES-CON12-4-GP
CAP_XPRES
KBC_SCL1
KBC_SDA1
KBC_SCL1_CAP
KBC_SDA1_CAP
CAP_ACK
CAP_DAT
INSTANT_ON_BTN#
CAP_BTN_S0
CAP_MUTE
R349, R253 place near G792
R349
R253
R251
R252
MMY-R2
0R2J-2-GP
R239
10KR2J-3-GP
C686
Q19
2N7002-7F-GP
EAPD
5V_S5
C546
SCD1U16V2ZY-2GP
C543
RN65
SRN10KJ-5-GP
TPAD1
FOX-CON4-12-GP
TDATA_5
TCLK_5
C545
SC33P50V2JN-3GP
C542
SC33P50V2JN-3GP
TouchPad Connector
USB3_N
USB3_P
SRN15KJ-3-GP
RN42
R233
R232
D34
D35
D36
BAV99TPT-GP
C695
SCD1U16V2ZY-2GP
PLACE NEAR CAP1
C400
C420
C398
C397
C396
C393
C399
test
TOUCH-PAD SWITCH
TOUCH_PAD_SW
R418
10KR2J-3-GP
R419
100R2J-2-GP
C568
SC1KP50V2KX-1GP
D11
TP_BTN#
SW-TACT-68-GP-L
SW1
KROW2
KROW8
KROW7
KCOL10
RC2
SRC100P50V-2-GP
KCOL3
KCOL5
KCOL8
KCOL9
RC5
KCOL15
KCOL12
KCOL11
KCOL16
RC7
KROW5
KROW6
KCOL1
KROW3
RC3
KROW4
KCOL6
KCOL2
KROW1
RC4
KCOL7
KCOL4
KCOL13
KCOL14
RC6
for EMI
Wistron Corporation
21F, 88, Sec.1, Hsin Tai Wu Rd., Hsichih,
Taipei Hsien 221, Taiwan, R.O.C.
Title
KeyBoard-CONN
Size A3
Document Number
TIBET
Rev SA
Date: Tuesday, August 14, 2007
Sheet 32 of 44

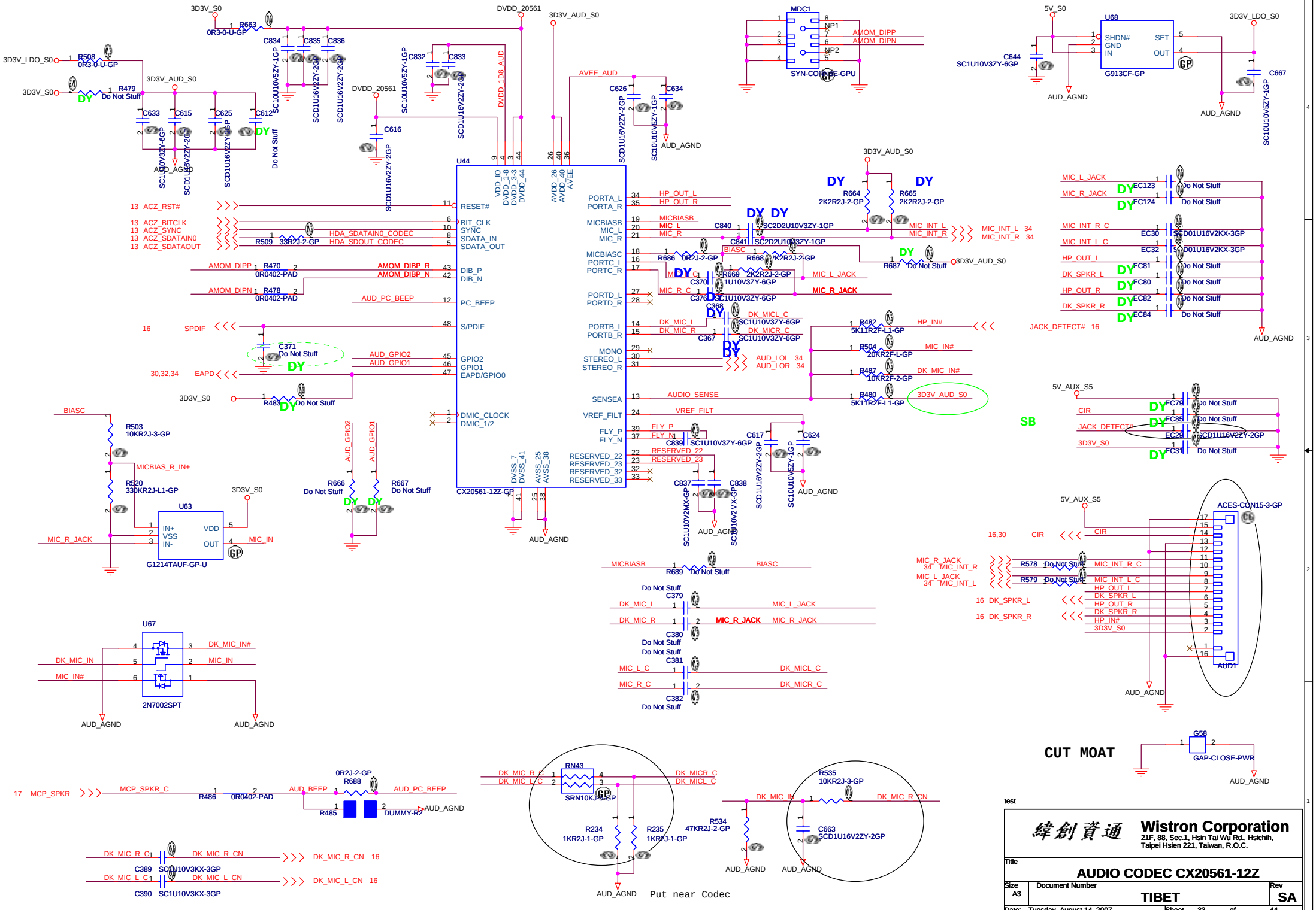
U44
CX20561-12Z-GP
U63
G1214TAUF-GP-U
U67
2N7002SPT
U68
G913CF-GP
MDC1
SYN-CON-NE-GPU
ACES-CON15-3-GP
AUD1
G58
GAP-CLOSE-PWR
CUT MOAT
Put near Codec
test
Wistron Corporation
21F, 88, Sec.1, Hsin Tai Wu Rd., Hsichih,
Taipei Hsien 221, Taiwan, R.O.C.
Title
AUDIO CODEC CX20561-12Z
Size
A3
Document Number
TIBET
Rev
SA
Date: Tuesday, August 14, 2007
Sheet 33 of 44

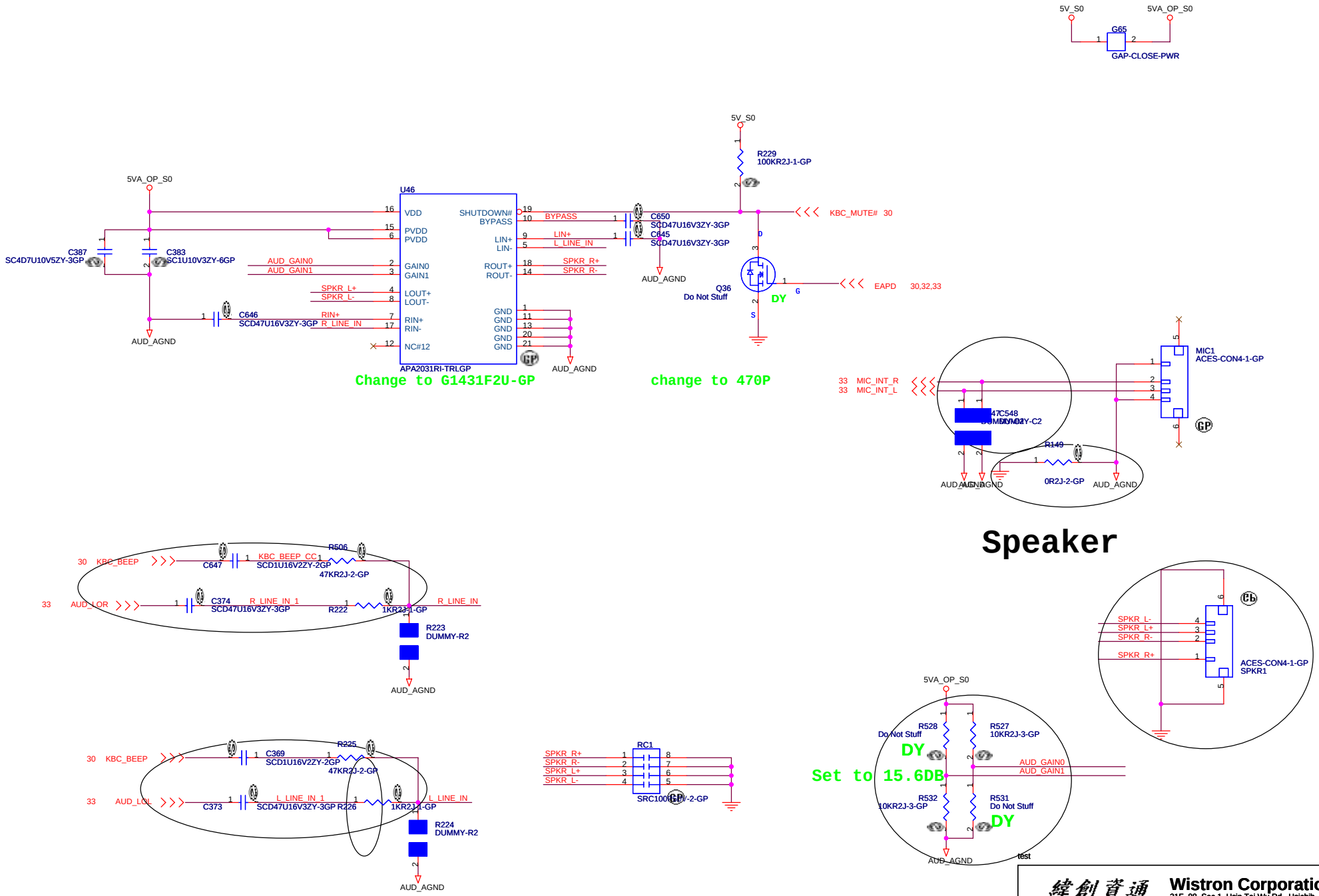

緯創資通 **Wistron Corporation**
21F, 88, Sec.1, Hsin Tai Wu Rd., Hsichih,
Taipei Hsien 221, Taiwan, R.O.C.

Title	AUDIO AMP APA3031	
Size A3	Document Number TIBET	Rev SA
Date: Tuesday, August 14, 2007	Sheet 34 of 44	

Suspend Power

Remove Dummy PAD

Run Power

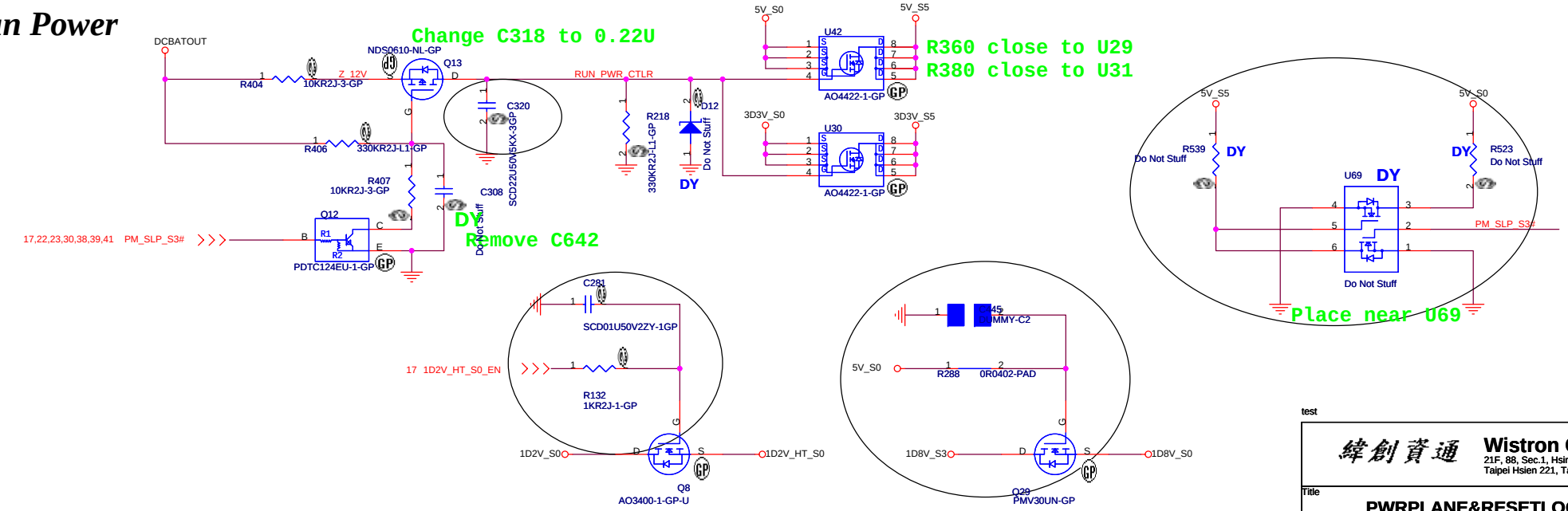

test

緯創資通	**Wistron Corporation** 21F, 88, Sec.1, Hsin Tai Wu Rd., Hsichih, Taipei Hsien 221, Taiwan, R.O.C.
Title	**PWRPLANE&RESETLOGIC**
Size A3	Document Number **TIBET** Rev **SA**
Date: Tuesday, August 14, 2007	Sheet 35 of 44

CPU_VCORE
VID=1.15V(25W)/1.1V(35W)
Iomax=25A(25W)/35A (35W)
OCP=40A~45A

TABLE 1. VOLTAGE IDENTIFICATION CODES

VID5	VID4	VID3	VID2	VID1	VID0	DAC
0	0	0	0	0	0	1.550
0	0	0	0	0	1	1.525
0	0	0	0	1	0	1.500
0	0	0	0	1	1	1.475
0	0	0	1	0	0	1.450
0	0	0	1	0	1	1.425
0	0	0	1	1	0	1.400
0	0	0	1	1	1	1.375
0	0	1	0	0	0	1.350
0	0	1	0	0	1	1.325
0	0	1	0	1	0	1.300
0	0	1	0	1	1	1.275
0	0	1	1	0	0	1.250
0	0	1	1	0	1	1.225
0	0	1	1	1	0	1.200
0	0	1	1	1	1	1.175
0	1	0	0	0	0	1.150
0	1	0	0	0	1	1.125
0	1	0	0	1	0	1.100
0	1	0	0	1	1	1.075
0	1	0	1	0	0	1.050
0	1	0	1	0	1	1.025
0	1	0	1	1	0	1.000
0	1	0	1	1	1	0.975
0	1	1	0	0	0	0.950
0	1	1	0	0	1	0.925
0	1	1	0	1	0	0.900
0	1	1	0	1	1	0.875
0	1	1	1	0	0	0.850
0	1	1	1	0	1	0.825
0	1	1	1	1	0	0.800
0	1	1	1	1	1	0.775
1	0	0	0	0	0	0.7625
1	0	0	0	0	1	0.75
1	0	0	0	1	0	0.7375
1	0	0	0	1	1	0.725
1	0	0	1	0	0	0.7125
1	0	0	1	0	1	0.7
1	1	1	1	1	1	0.375

TON:	Frequency:
GND	550KHz
REF	300KHz
OPEN	200KHz
VCC	100KHz

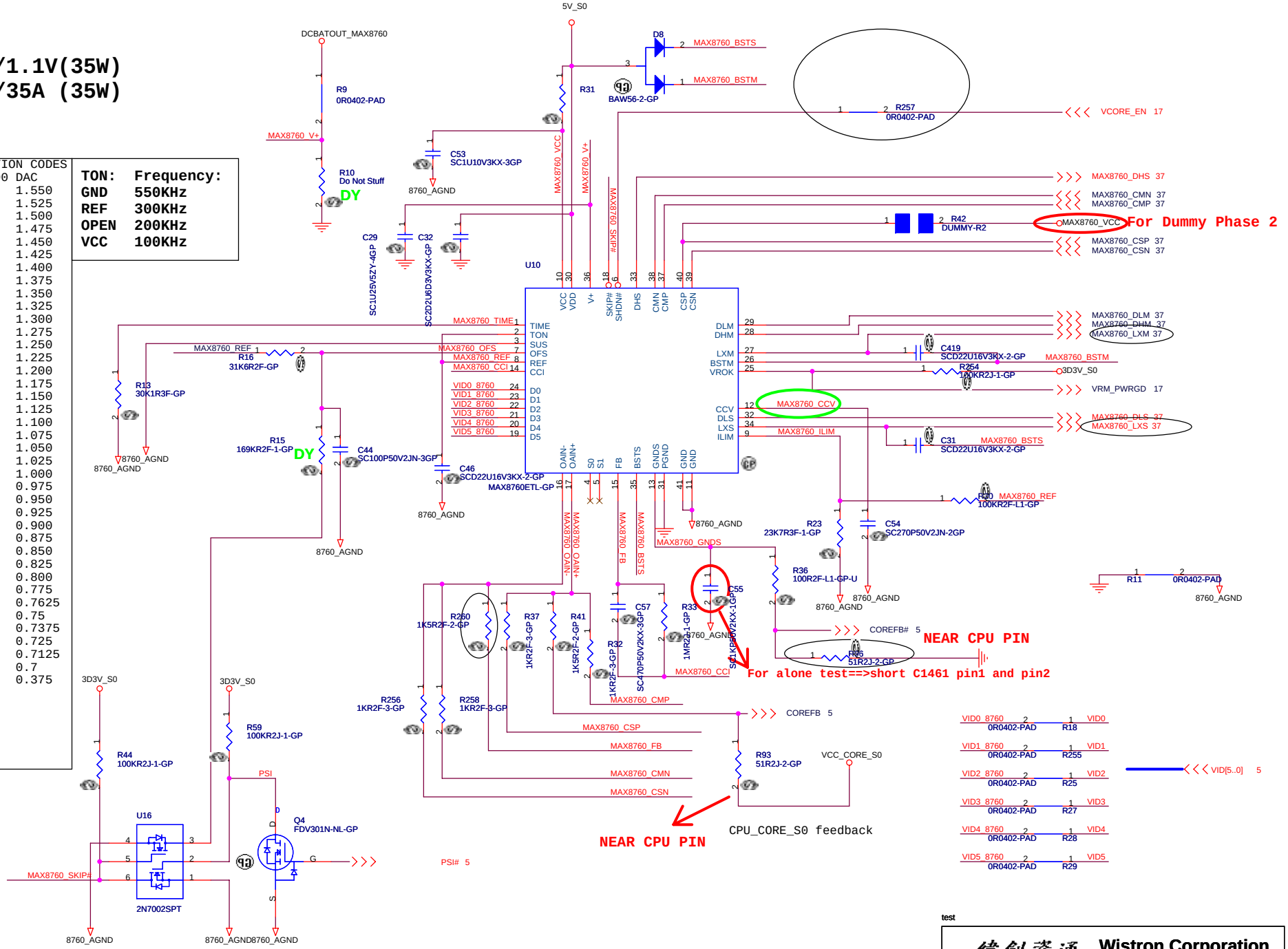

test

Wistron Corporation
21F, 88, Sec.1, Hsin Tai Wu Rd., Hsichih,
Taipei Hsien 221, Taiwan, R.O.C.

Title: **CPU CORE MAX8760(1/2)**

Size	Document Number	Rev
A3	TIBET	SA

Date: Tuesday, August 14, 2007 Sheet 36 of 44

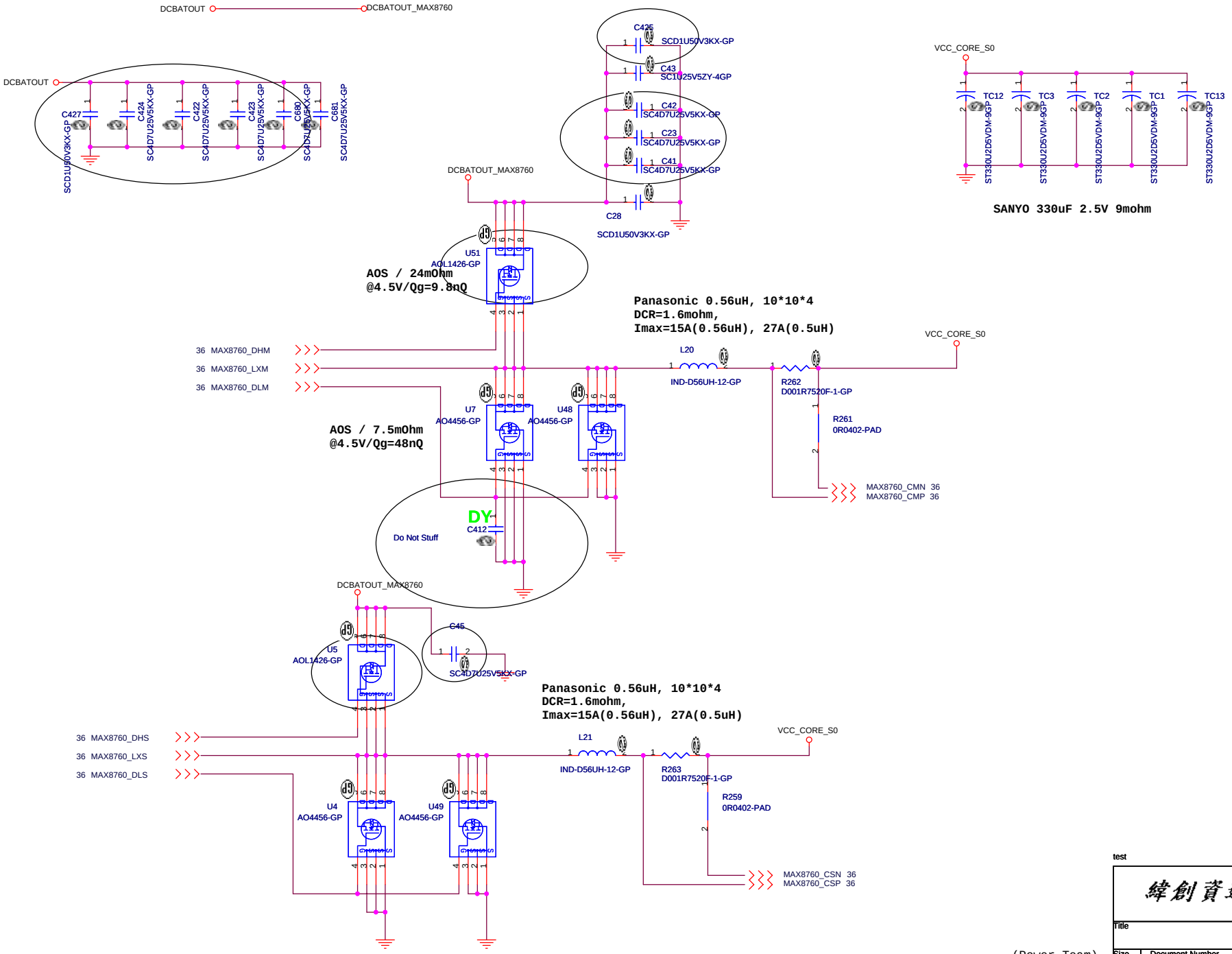

(Power Team)

test

緯創資通	**Wistron Corporation** 21F, 88, Sec.1, Hsin Tai Wu Rd., Hsichih, Taipei Hsien 221, Taiwan, R.O.C.
Title	**CPU CORE MAX8760(2/2)**
Size A3	Document Number **TIBET** Rev **SA**
Date: Tuesday, August 14, 2007	Sheet 37 of 44

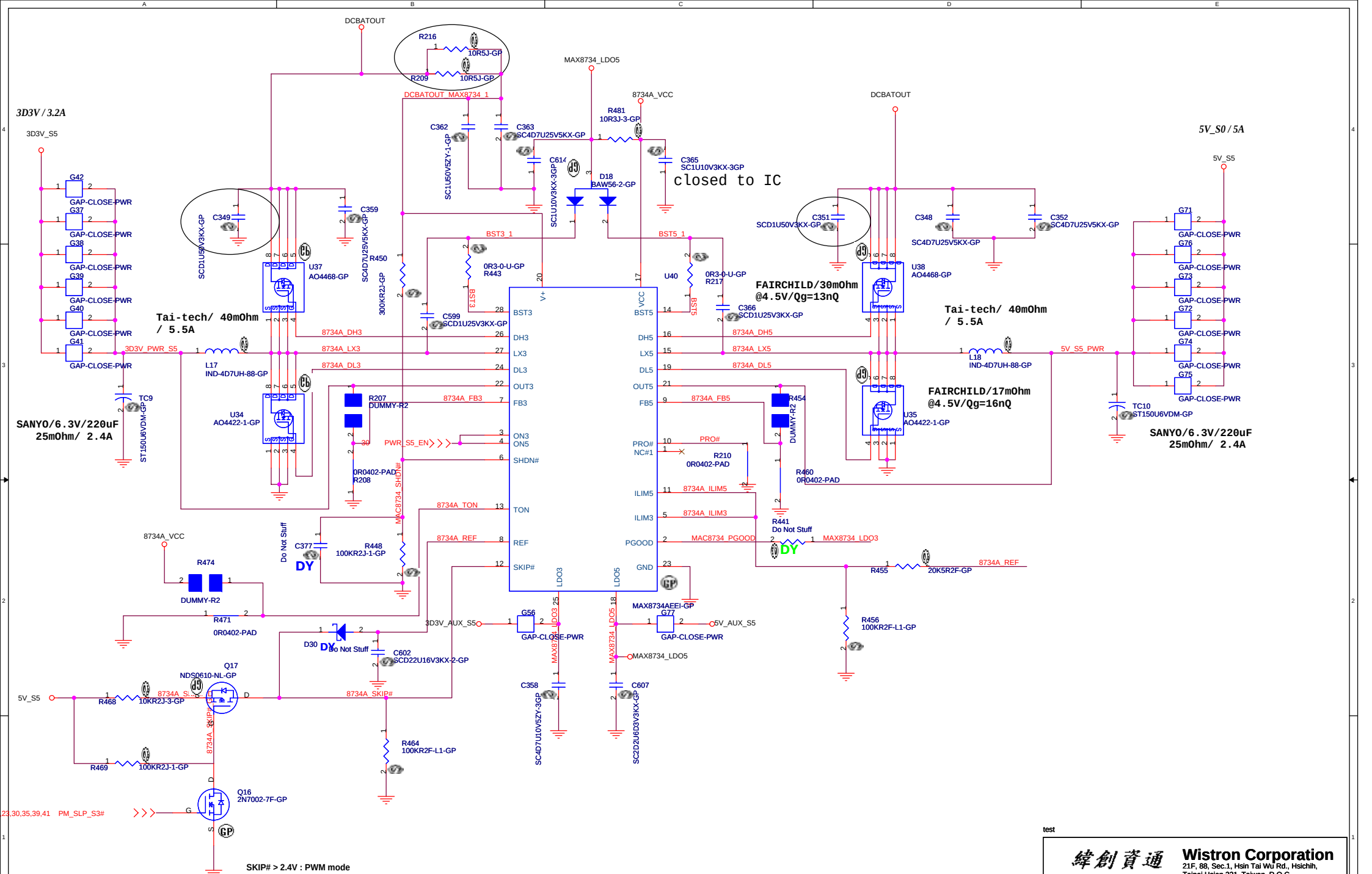
3D3V / 3.2A
5V_S0 / 5A
DCBATOUT
MAX8734_LDO5
8734A_VCC
closed to IC
Tai-tech/ 40mOhm / 5.5A
FAIRCHILD/30mOhm @4.5V/Qg=13nQ
FAIRCHILD/17mOhm @4.5V/Qg=16nQ
SANYO/6.3V/220uF 25mOhm/ 2.4A
SANYO/6.3V/220uF 25mOhm/ 2.4A
U37 AO4468-GP
U38 AO4468-GP
U34 AO4422-1-GP
U35 AO4422-1-GP
U40
Q17 NDS0610-NL-GP
Q16 2N7002-7F-GP
MAX8734AEEI-GP
DY
DY
DY
Do Not Stuff
Do Not Stuff
Do Not Stuff
SKIP# > 2.4V : PWM mode
SKIP# = GND(,0.8V) : SKIP MODE
SKIP# = REF (1.7V~2.3V)/FloatING
Ultrasonic MODE(25KHz min)
VTON = Vcc
3.3V = 300KHz
5V = 200KHz
test
Wistron Corporation
21F, 88, Sec.1, Hsin Tai Wu Rd., Hsichih, Taipei Hsien 221, Taiwan, R.O.C.
Title
MAX8734 3D3V/5V
Size A3
Document Number
TIBET
Rev SA
Date: Tuesday, August 14, 2007
Sheet 38 of 44

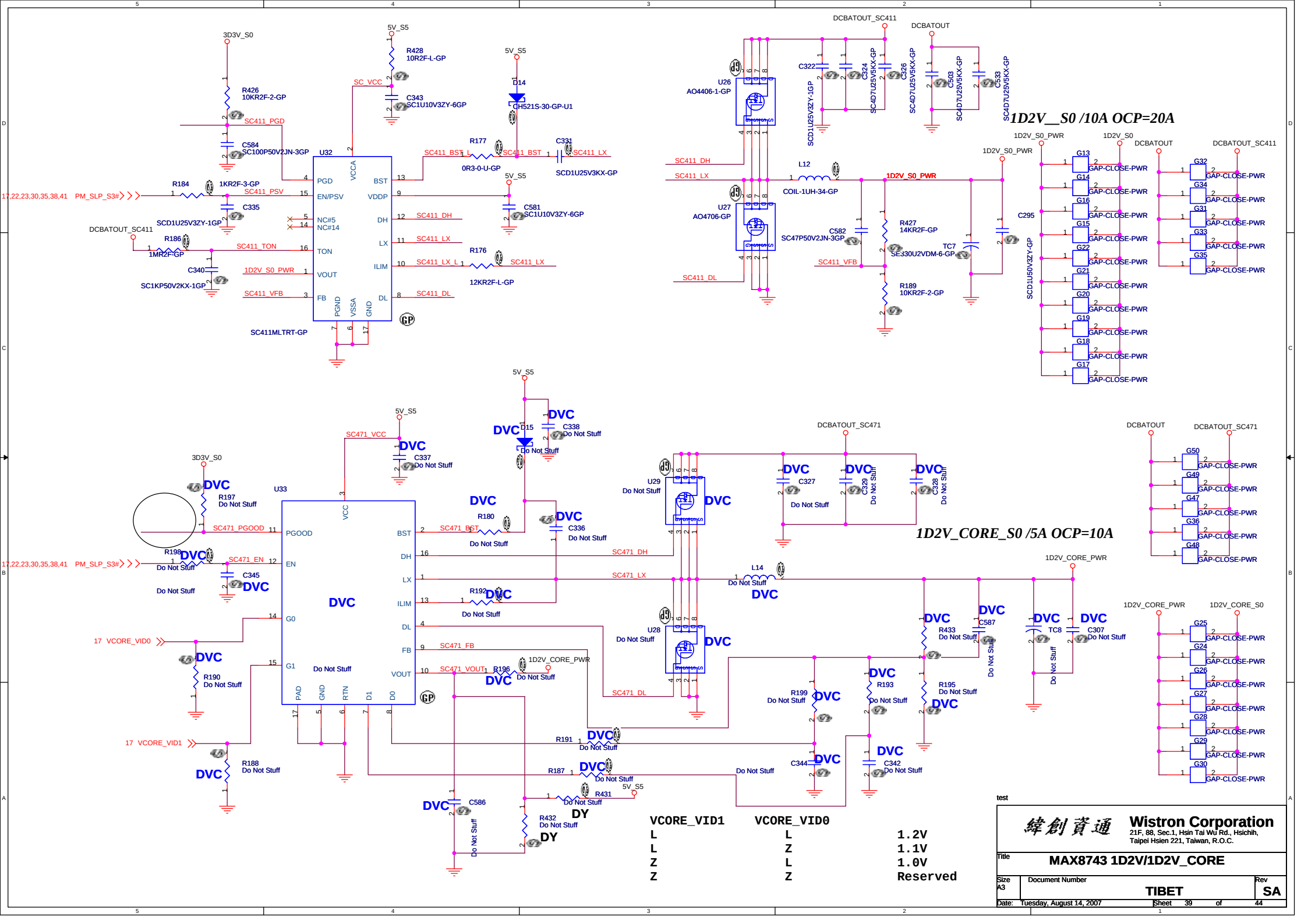

VCORE_VID1	VCORE_VID0	
L	L	1.2V
L	Z	1.1V
Z	L	1.0V
Z	Z	Reserved

TI TPS51116 for 1D8V and 0D9V

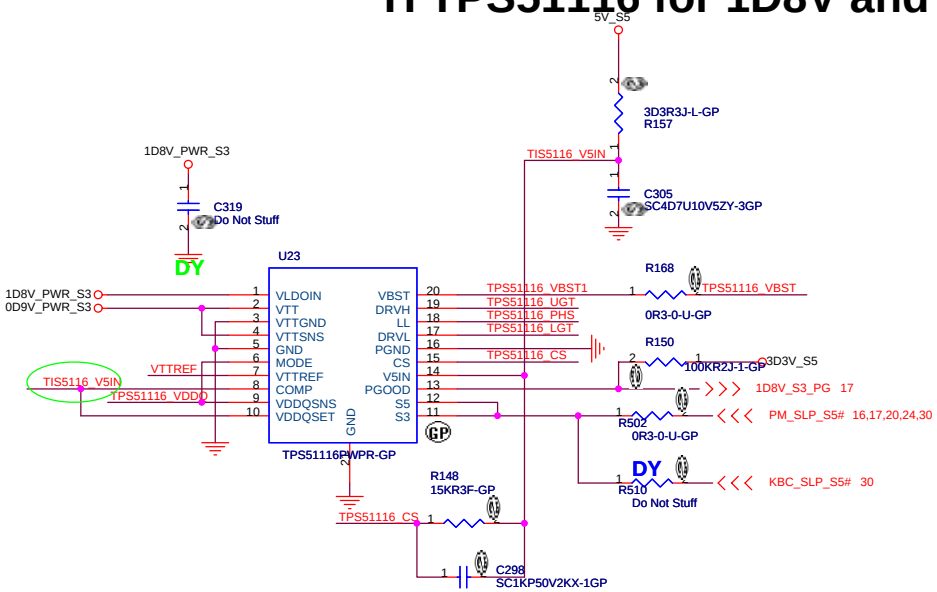

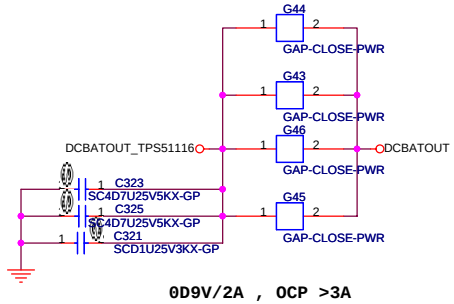

0D9V/2A , OCP >3A

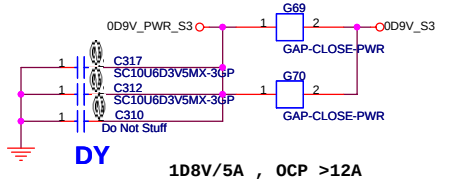

1D8V/5A , OCP >12A

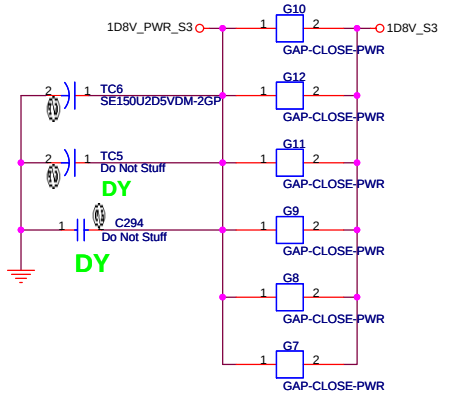

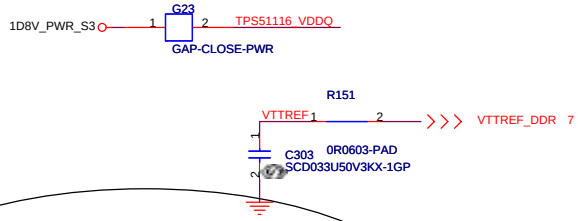

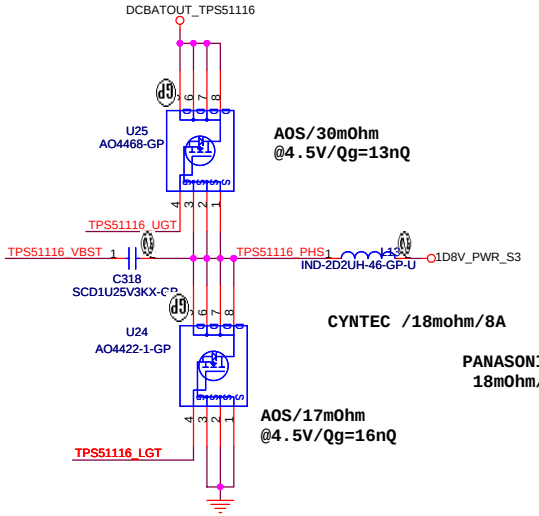

State	S3	S5	VDDR	VTTREF	VTT
S0	Hi	Hi	On	On	On
S3	Lo	Hi	On	On	Off(Hi-Z)
S4/S5	Lo	Lo	Off	Off	Off

test

緯創資通 Wistron Corporation
21F, 88, Sec.1, Hsin Tai Wu Rd., Hsichih,
Taipei Hsien 221, Taiwan, R.O.C.

Title: TPS51116 1D8V/0D9V

Size: A3 | Document Number: TIBET | Rev: SA

Date: Tuesday, August 14, 2007 | Sheet 40 of 44

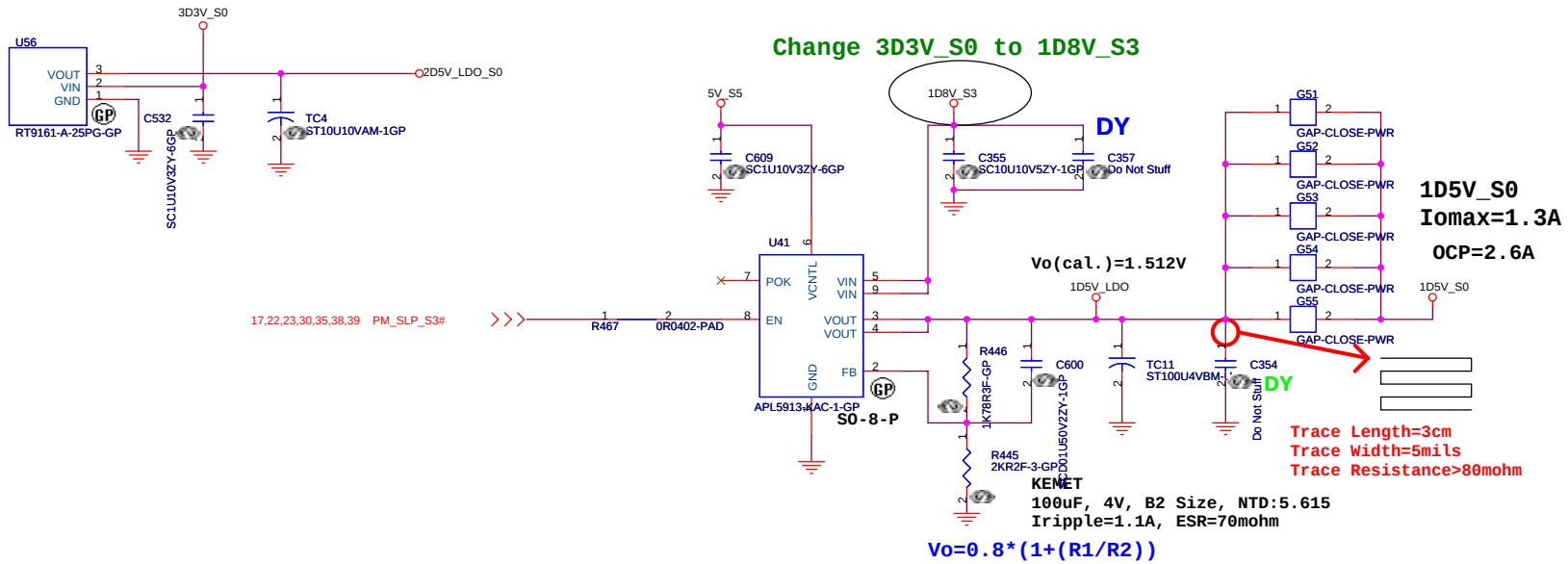

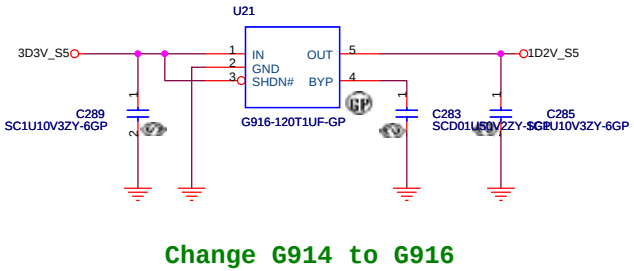

test

緯創資通	**Wistron Corporation** 21F, 88, Sec.1, Hsin Tai Wu Rd., Hsichih, Taipei Hsien 221, Taiwan, R.O.C.	
Title	***1D5V/2D5V/3D3V/5V_AUX***	
Size A3	Document Number **TIBET**	Rev **SA**
Date: Tuesday, August 14, 2007	Sheet 41 of 44	

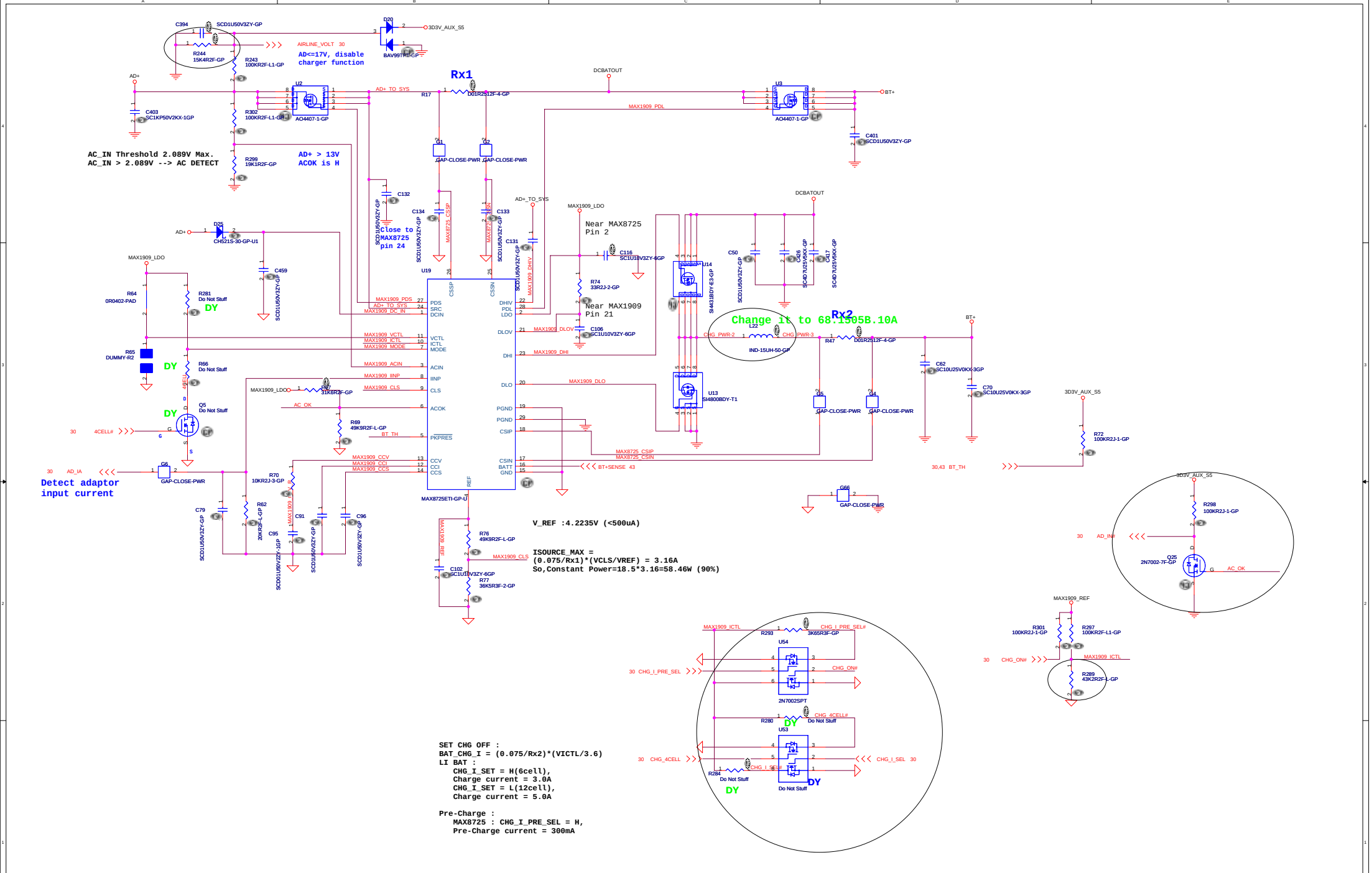
AIRLINE_VOLT 30
AD<=17V, disable charger function
AC_IN Threshold 2.089V Max.
AC_IN > 2.089V --> AC DETECT
AD+ > 13V
ACOK is H
Rx1
Rx2
Change it to 68.1505B.10A
Near MAX8725 Pin 2
Near MAX1909 Pin 21
close to MAX8725 pin 24
Detect adaptor input current
V_REF :4.2235V (<500uA)
ISOURCE_MAX =
(0.075/Rx1)*(VCLS/VREF) = 3.16A
So,Constant Power=18.5*3.16=58.46W (90%)
SET CHG OFF :
BAT_CHG_I = (0.075/Rx2)*(VICTL/3.6)
LI BAT :
CHG_I_SET = H(6cell),
Charge current = 3.0A
CHG_I_SET = L(12cell),
Charge current = 5.0A
Pre-Charge :
MAX8725 : CHG_I_PRE_SEL = H,
Pre-Charge current = 300mA
Wistron Corporation
21F, 88, Sec.1, Hsin Tai Wu Rd., Hsichih,
Taipei Hsien 221, Taiwan, R.O.C.
CHARGER MAX8725
TIBET
SA
Date: Tuesday, August 14, 2007
Sheet 42 of 44

Adaptor in to generate DCBATOUT

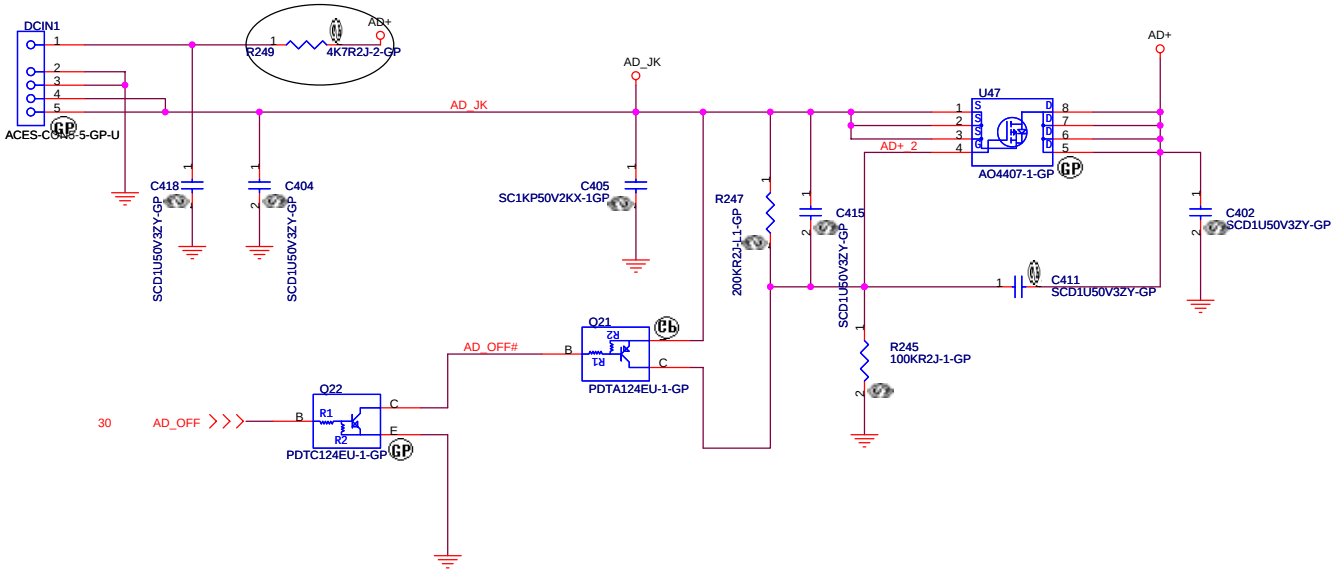

BATTERY CONNECTOR

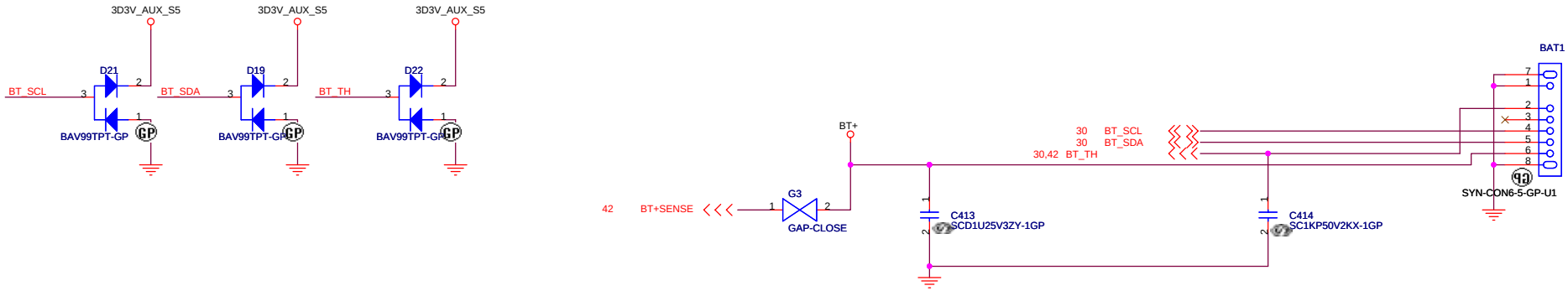

test

緯創資通	**Wistron Corporation** 21F, 88, Sec.1, Hsin Tai Wu Rd., Hsichih, Taipei Hsien 221, Taiwan, R.O.C.	
Title	**AD/BATT CONN**	
Size A3	Document Number **TIBET**	Rev **SA**
Date: Tuesday, August 14, 2007	Sheet 43 of 44	

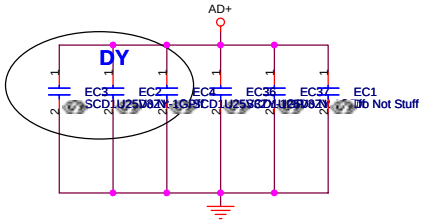

DY DY

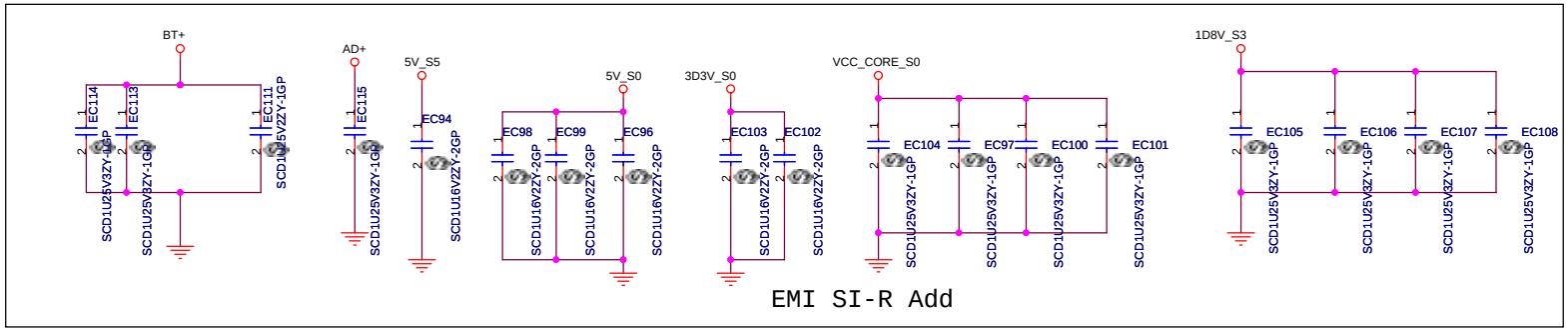

EMI SI-R Add

	FF	DF
CAMERA	○	×
LAN	10/100	10/100
1394/5 IN 1	○	×
EXTRA USB	○	×
MIC	○	×
CR LED	○	×

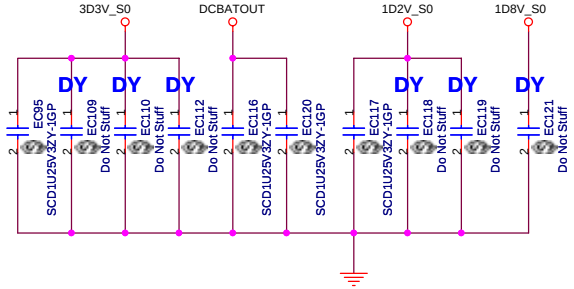

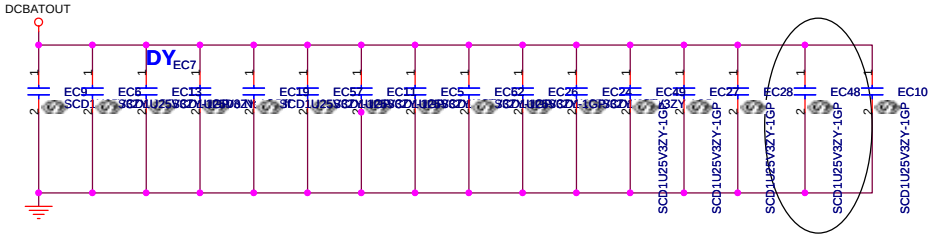

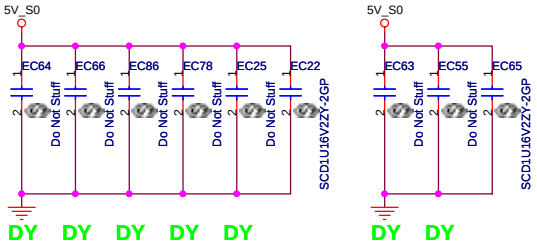

DY DY DY DY DY DY DY

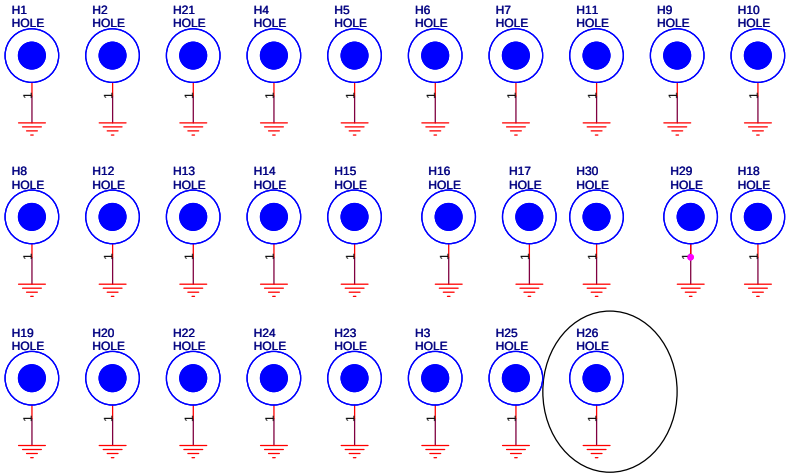

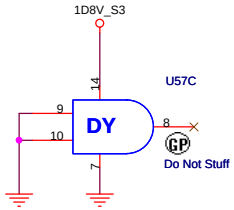

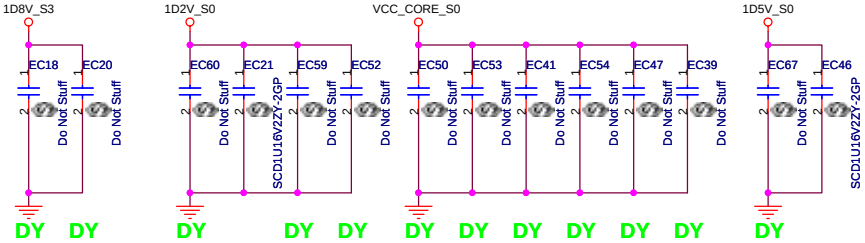

DY DY DY DY DY DY DY DY DY DY DY

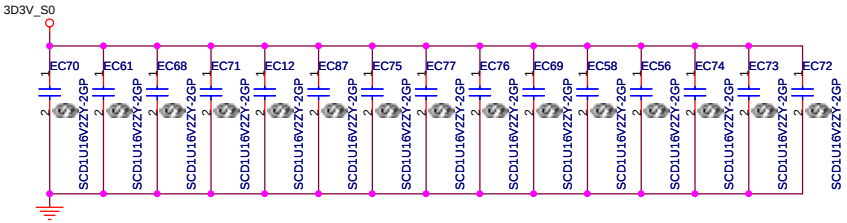

Modify SPR7 P/N manually

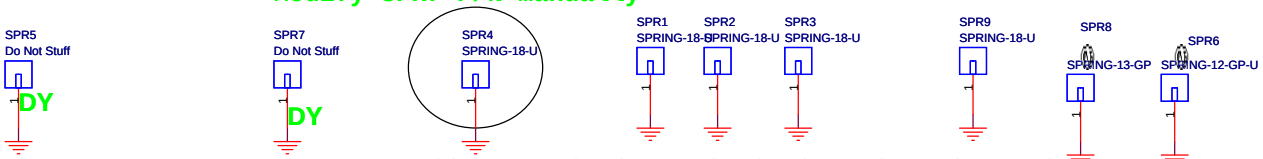

THE FOOTPRINT OF SPR5, SPR6, SPR7 CAN NOT BE GND

test

緯創資通 **Wistron Corporation**
21F, 88, Sec.1, Hsin Tai Wu Rd., Hsichih,
Taipei Hsien 221, Taiwan, R.O.C.

Title	MISC	
Size A3	Document Number TIBET	Rev SA
Date: Wednesday, August 15, 2007	Sheet 44 of 44	