MANAUS 10M

PreMP Build(A02)

2010.03.23

DATE	CHANGE NO.	REV
2010/03/16	2010-ECO-004887	A

	EE	DATE	POWER	DATE
DRAWER	Pei, Kobe	2010-03-16	Lo, Bin-Zhi	2010-03-16
DESIGN	Pei, Kobe	2010-03-16	Lo, Bin-Zhi	2010-03-16
CHECK	Pei, Kobe	2010-03-16	Lo, Bin-Zhi	2010-03-16
RESPONSIBLE	Chiou, Bryan	2010-03-16	Liang, Tommy	2010-03-16

SIZE = 3 VER : A02

FILE NAME : MAS10M-6050A2355301-MB-A02-26-20100322

P/N 6050A2355301

INVENTEC

TITLE *MAS10M*

SIZE	CODE	DOC. NUMBER	REV
A3	CS	*1310A23553-0-0*	*A02*

SHEET 1 OF 52

TABLE OF CONTENTS

PAGE	PAGE	PAGE
1.COVER PAGE	31.ICH9-1	
2.INDEX	32.ICH9-2	
3.BLOCK DIAGRAM	33.ICH9-3	
4.POWER SEQUENCE BLOCK	34.ICH9-4	
5-12.SYSTEM POWER	35.ICH9-5	
13.CLOCK GENERATOR	36.SATA HDD CONN	
14.PENRYN-1	37.ODD CONN	
15.PENRYN-2	38.USB CONN	
16.PENRYN-3	39.Camera	
17.PENRYN-4	40.KBC	
18.FAN & THERMAL CONTROLLER	41.K/B & TP/B CONN	
19.CANTIGA-1	42.Audio Codec	
20.CANTIGA-2	43.Audio AMP/MIC/Speaker	
21.CANTIGA-3	44.LAN CONTROLLER	
22.CANTIGA-4	45.RJ45 & TRANSFORMER	
23.CANTIGA-5	46.USB Card Reader	
24.CANTIGA-6	47.WLAN /Debug	
25.CANTIGA-7	48.LED(M/B) & HOTKEY/B CONN	
26.DDR3 DIMM0	49.HALL SENSOR	
27.DDR3 DIMM1	50.Screw	
28.DDR DAMPING	51.EMI	
29.CRT CONN	52. power board	
30.LCM CONN		

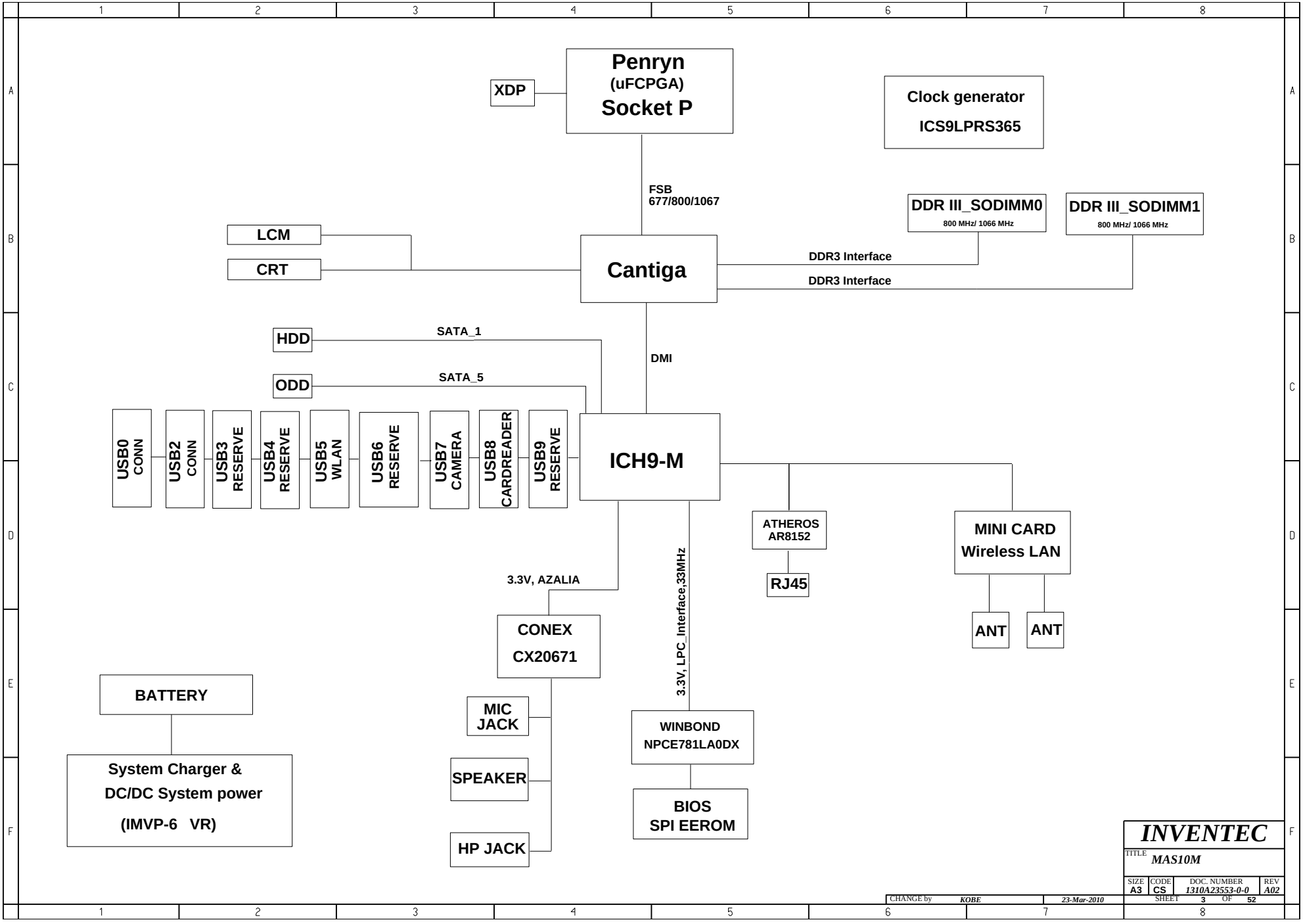
Penryn
(uFCPGA)
Socket P
XDP
Clock generator
ICS9LPRS365
FSB
677/800/1067
DDR III_SODIMM0
800 MHz/ 1066 MHz
DDR III_SODIMM1
800 MHz/ 1066 MHz
LCM
CRT
Cantiga
DDR3 Interface
DDR3 Interface
HDD
SATA_1
DMI
ODD
SATA_5
USB0 CONN
USB2 CONN
USB3 RESERVE
USB4 RESERVE
USB5 WLAN
USB6 RESERVE
USB7 CAMERA
USB8 CARDREADER
USB9 RESERVE
ICH9-M
ATHEROS AR8152
RJ45
MINI CARD
Wireless LAN
ANT
ANT
3.3V, AZALIA
CONEX
CX20671
3.3V, LPC_Interface,33MHz
MIC JACK
SPEAKER
HP JACK
WINBOND
NPCE781LA0DX
BIOS
SPI EEROM
BATTERY
System Charger &
DC/DC System power
(IMVP-6 VR)
INVENTEC
TITLE MAS10M
SIZE A3
CODE CS
DOC. NUMBER 1310A23553-0-0
REV A02
SHEET 3 OF 52
CHANGE by KOBE
23-Mar-2010

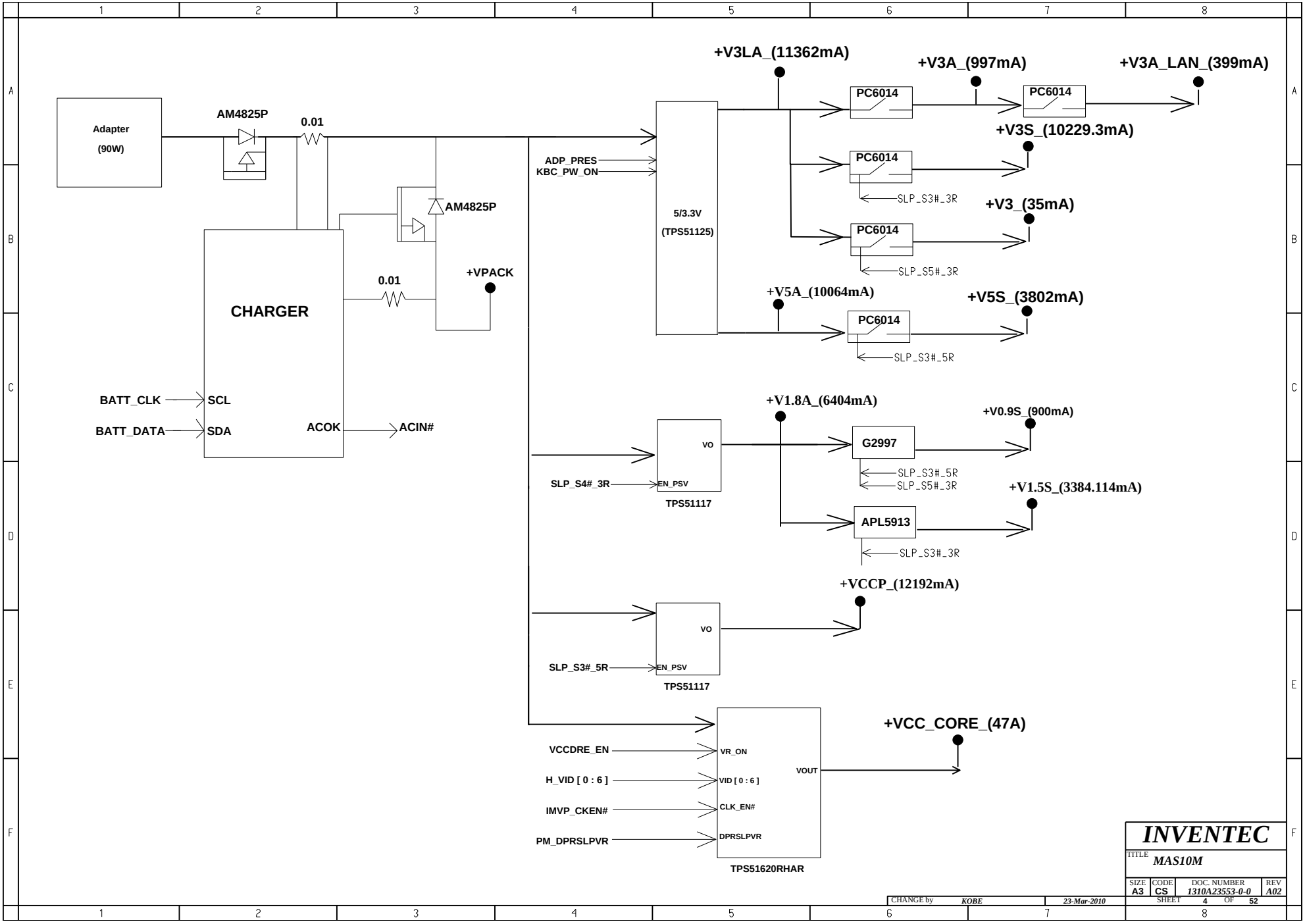
Adapter
(90W)
AM4825P
0.01
AM4825P
0.01
+VPACK
CHARGER
BATT_CLK
SCL
BATT_DATA
SDA
ACOK
ACIN#
ADP_PRES
KBC_PW_ON
5/3.3V
(TPS51125)
+V3LA_(11362mA)
PC6014
+V3A_(997mA)
PC6014
+V3A_LAN_(399mA)
+V3S_(10229.3mA)
PC6014
SLP_S3#_3R
+V3_(35mA)
PC6014
SLP_S5#_3R
+V5A_(10064mA)
+V5S_(3802mA)
PC6014
SLP_S3#_5R
+V1.8A_(6404mA)
+V0.9S_(900mA)
VO
G2997
SLP_S4#_3R
EN_PSV
TPS51117
SLP_S3#_5R
SLP_S5#_3R
+V1.5S_(3384.114mA)
APL5913
SLP_S3#_3R
+VCCP_(12192mA)
VO
SLP_S3#_5R
EN_PSV
TPS51117
+VCC_CORE_(47A)
VCCDRE_EN
VR_ON
H_VID [0 : 6]
VID [0 : 6]
VOUT
IMVP_CKEN#
CLK_EN#
PM_DPRSLPVR
DPRSLPVR
TPS51620RHAR
INVENTEC
TITLE
MAS10M
SIZE
A3
CODE
CS
DOC. NUMBER
1310A23553-0-0
REV
A02
SHEET
4
OF
52
CHANGE by
KOBE
23-Mar-2010

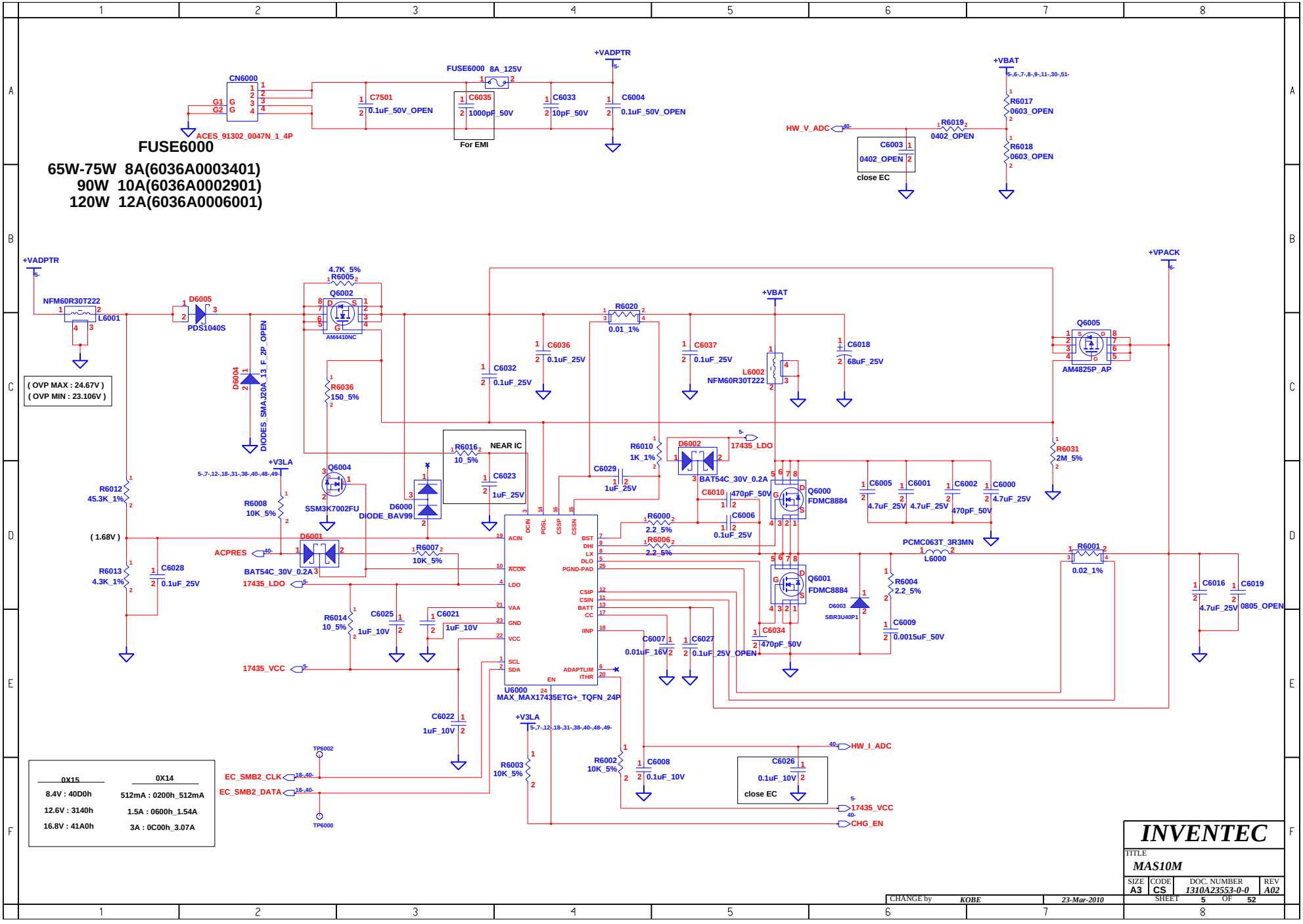
FUSE6000
65W-75W 8A(6036A0003401)
90W 10A(6036A0002901)
120W 12A(6036A0006001)
CN6000
ACES_91302_0047N_1_4P
FUSE6000 8A_125V
For EMI
+VADPTR
+VBAT
+VPACK
+V3LA
+17435_LDO
+17435_VCC
HW_V_ADC
HW_I_ADC
EC_SMB2_CLK
EC_SMB2_DATA
CHG_EN
ACPRES
close EC
(OVP MAX : 24.67V)
(OVP MIN : 23.106V)
(1.68V)
NEAR IC
U6000
MAX_MAX17435ETG+_TQFN_24P
Q6000
FDMC8884
Q6001
FDMC8884
Q6002
AM4410NC
Q6004
SSM3K7002FU
Q6005
AM4825P_AP
L6000
PCMC063T_3R3MN
L6001
NFM60R30T222
L6002
NFM60R30T222
D6000
DIODE_BAV99
D6001
BAT54C_30V_0.2A
D6002
BAT54C_30V_0.2A
D6003
SBR3U40P1
D6004
DIODES_SMAJ20A_13_F_2P_OPEN
D6005
PDS1040S
TP6000
TP6002
0X15
8.4V : 40D0h
12.6V : 3140h
16.8V : 41A0h
0X14
512mA : 0200h_512mA
1.5A : 0600h_1.54A
3A : 0C00h_3.07A
INVENTEC
TITLE
MAS10M
SIZE A3
CODE CS
DOC. NUMBER 1310A23553-0-0
REV A02
SHEET 5 OF 52
CHANGE by KOBE
23-Mar-2010

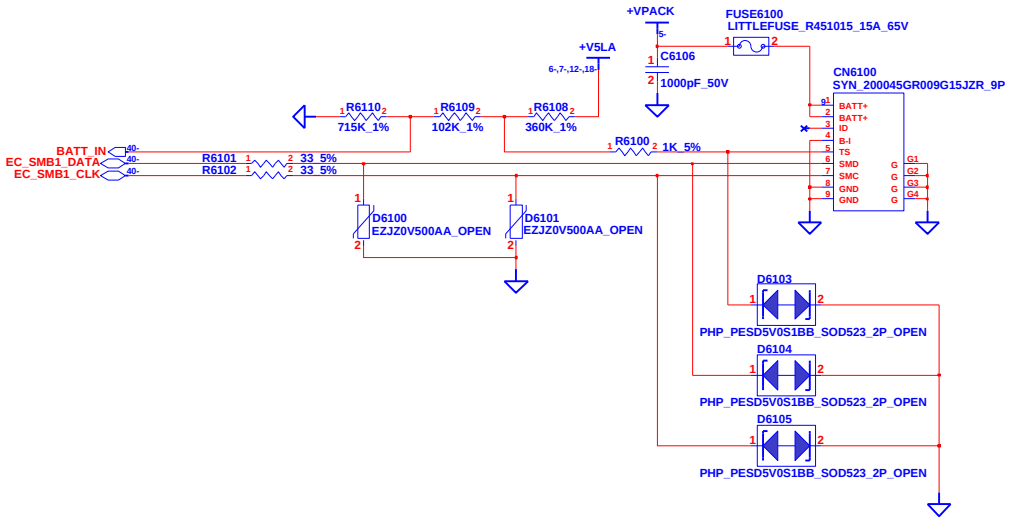

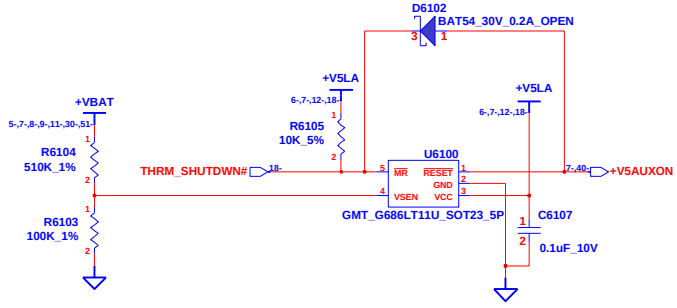

INVENTEC

TITLE

SELECT & BATTERY CONN

SIZE	CODE	DOC. NUMBER	REV
A3	CS	1310A23553-0-0	A02

SHEET 6 OF 52

CHANGE by KOBE 23-Mar-2010

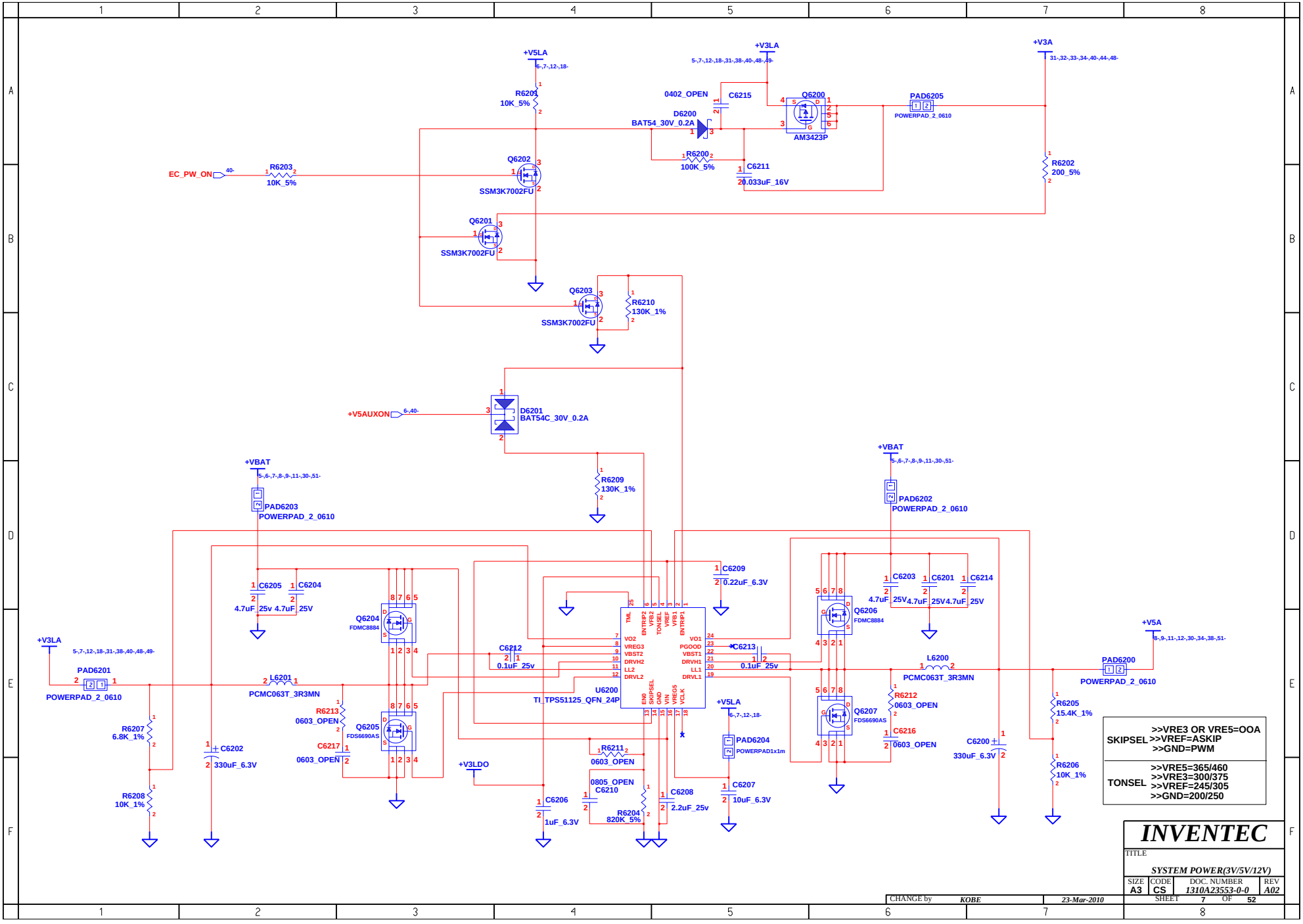
+V5LA
6-,7-,12-,18-
R6201
10K_5%
+V3LA
5-,7-,12-,18-,31-,38-,40-,48-,49-
0402_OPEN
C6215
D6200
BAT54_30V_0.2A
Q6200
AM3423P
PAD6205
POWERPAD_2_0610
+V3A
31-,32-,33-,34-,40-,44-,48-
R6200
100K_5%
C6211
0.033uF_16V
R6202
200_5%
EC_PW_ON
40-
R6203
10K_5%
Q6202
SSM3K7002FU
Q6201
SSM3K7002FU
Q6203
SSM3K7002FU
R6210
130K_1%
+V5AUXON
6-,40-
D6201
BAT54C_30V_0.2A
R6209
130K_1%
+VBAT
5-,6-,7-,8-,9-,11-,30-,51-
PAD6203
POWERPAD_2_0610
PAD6202
POWERPAD_2_0610
C6205
4.7uF_25v
C6204
4.7uF_25v
Q6204
FDMC8884
C6209
0.22uF_6.3V
C6203
4.7uF_25v
C6201
4.7uF_25v
C6214
4.7uF_25v
Q6206
FDMC8884
+V5A
8-,9-,11-,12-,30-,34-,38-,51-
+V3LA
5-,7-,12-,18-,31-,38-,40-,48-,49-
PAD6201
POWERPAD_2_0610
L6201
PCMC063T_3R3MN
C6212
0.1uF_25v
C6213
0.1uF_25v
U6200
TI_TPS51125_QFN_24P
TIM
VO2
VREG3
VBST2
DRVH2
LL2
DRVL2
ENTRIP2
VFB2
TONSEL
VREF
VFB1
ENTRIP1
VO1
PGOOD
VBST1
DRVH1
LL1
DRVL1
EN0
SKIPSEL
GND
VIN
VREG5
VCLK
L6200
PCMC063T_3R3MN
PAD6200
POWERPAD_2_0610
R6207
6.8K_1%
R6213
0603_OPEN
Q6205
FDS6690AS
C6217
0603_OPEN
C6202
330uF_6.3V
R6208
10K_1%
+V3LDO
R6211
0603_OPEN
+V5LA
6-,7-,12-,18-
PAD6204
POWERPAD1x1m
Q6207
FDS6690AS
R6212
0603_OPEN
C6216
0603_OPEN
C6200
330uF_6.3V
R6205
15.4K_1%
R6206
10K_1%
C6206
1uF_6.3V
0805_OPEN
C6210
R6204
820K_5%
C6208
2.2uF_25v
C6207
10uF_6.3V
SKIPSEL
>>VRE3 OR VRE5=OOA
>>VREF=ASKIP
>>GND=PWM
TONSEL
>>VRE5=365/460
>>VRE3=300/375
>>VREF=245/305
>>GND=200/250
INVENTEC
TITLE
SYSTEM POWER(3V/5V/12V)
SIZE A3
CODE CS
DOC. NUMBER 1310A23553-0-0
REV A02
SHEET 7 OF 52
CHANGE by KOBE
23-Mar-2010

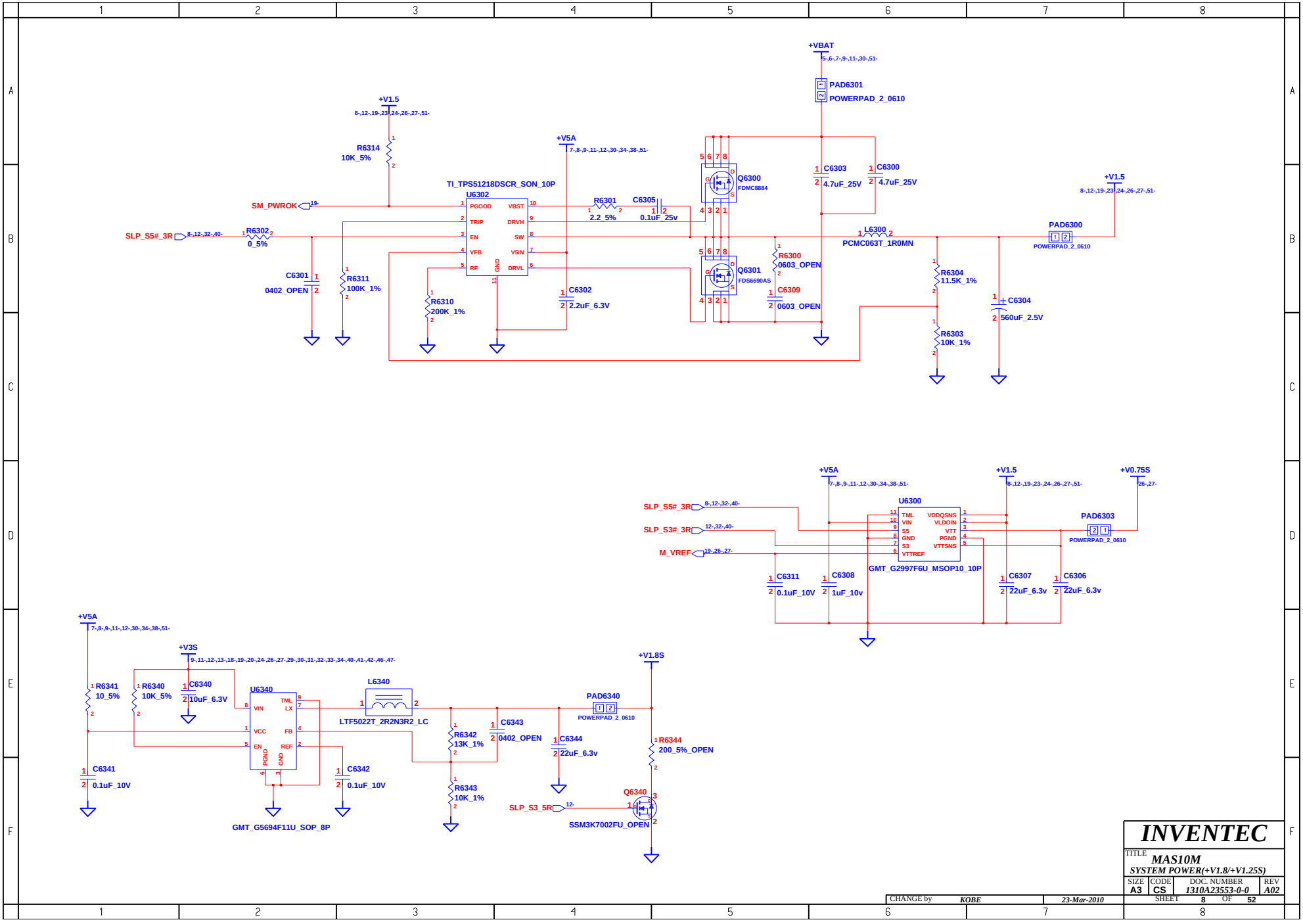

CHANGE by	KOBE	23-Mar-2010	

INVENTEC

TITLE
MAS10M
SYSTEM POWER(+V1.8/+V1.25S)

SIZE	CODE	DOC. NUMBER	REV
A3	CS	1310A23553-0-0	A02

SHEET 8 OF 52

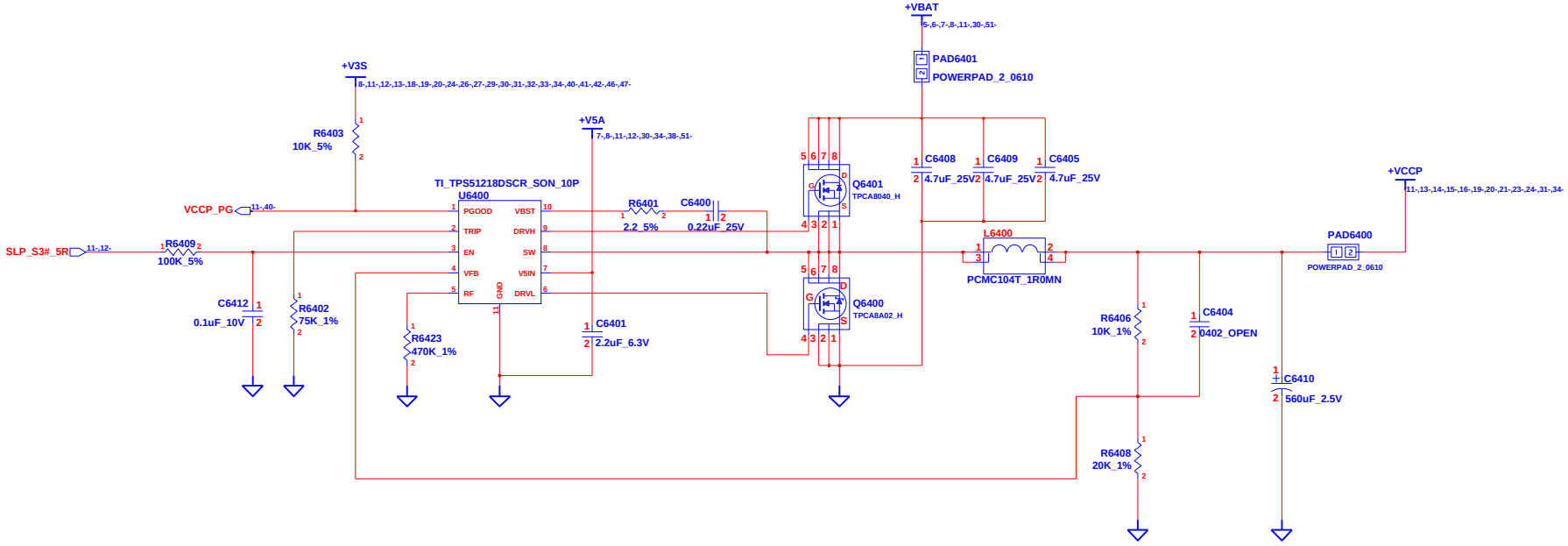

CHANGE by	KOBE	23-Mar-2010	INVENTEC				
			TITLE MAS10M GRAPHIC POWER (+VGFX_CORE)				
			SIZE A3	CODE CS	DOC. NUMBER 1310A23553-0-0	REV A02	
			SHEET 9	OF 52			

BLANK

CHANGE by	KOBE	23-Mar-2010			

INVENTEC

TITLE
MAS10M
SYSTEM POWER(+VCCP/+V1.5S)

SIZE	CODE	DOC. NUMBER	REV
A3	CS	1310A23553-0-0	A02

SHEET 10 OF 52

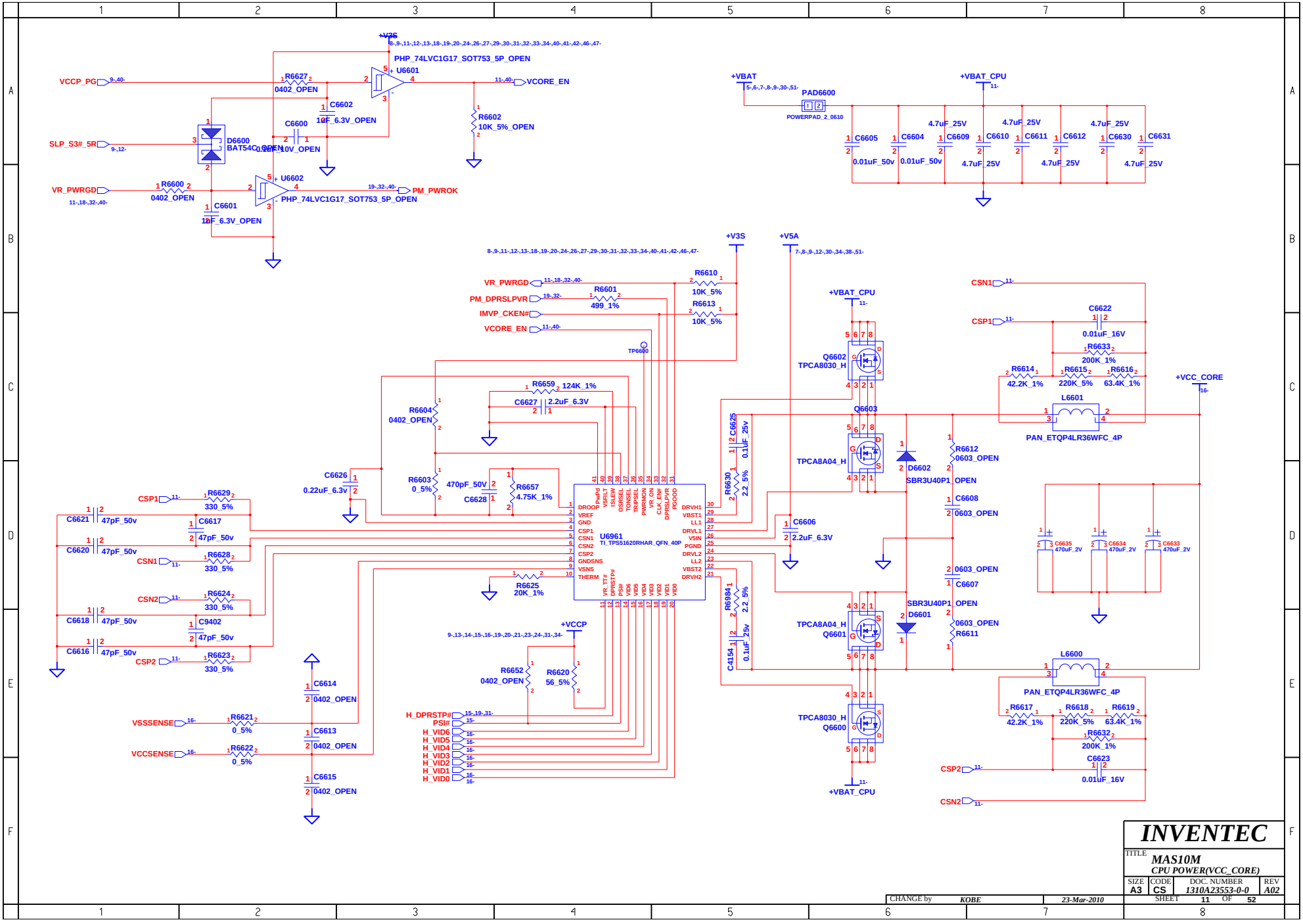

CHANGE by	KOBE	23-Mar-2010	

INVENTEC

TITLE: MAS10M
CPU POWER(VCC_CORE)

SIZE	CODE	DOC. NUMBER	REV
A3	CS	1310A23553-0-0	A02

SHEET 11 OF 52

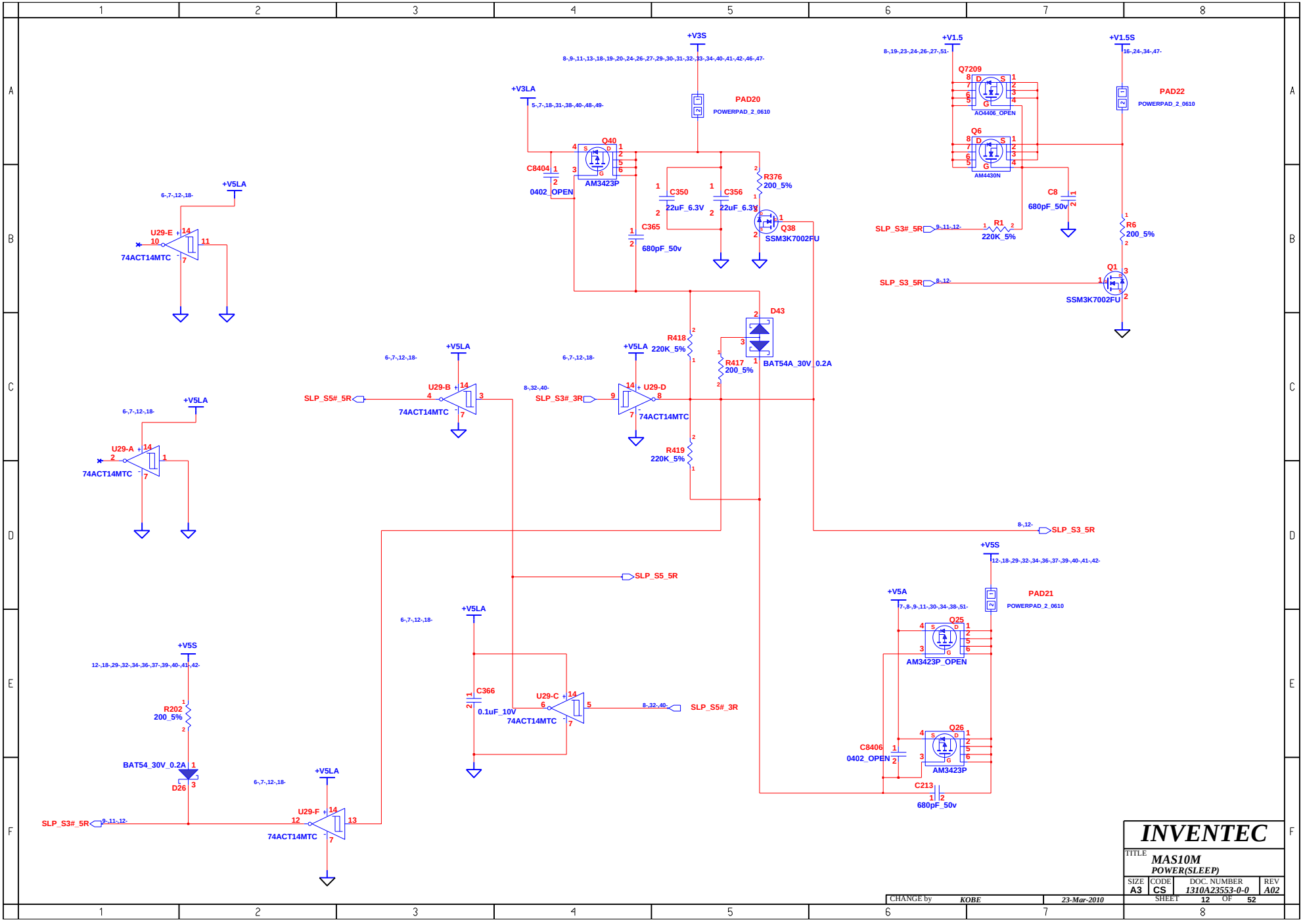

INVENTEC

TITLE
MAS10M
POWER(SLEEP)

SIZE	CODE	DOC. NUMBER	REV
A3	CS	1310A23553-0-0	A02

SHEET 12 OF 52

CHANGE by KOBE 23-Mar-2010

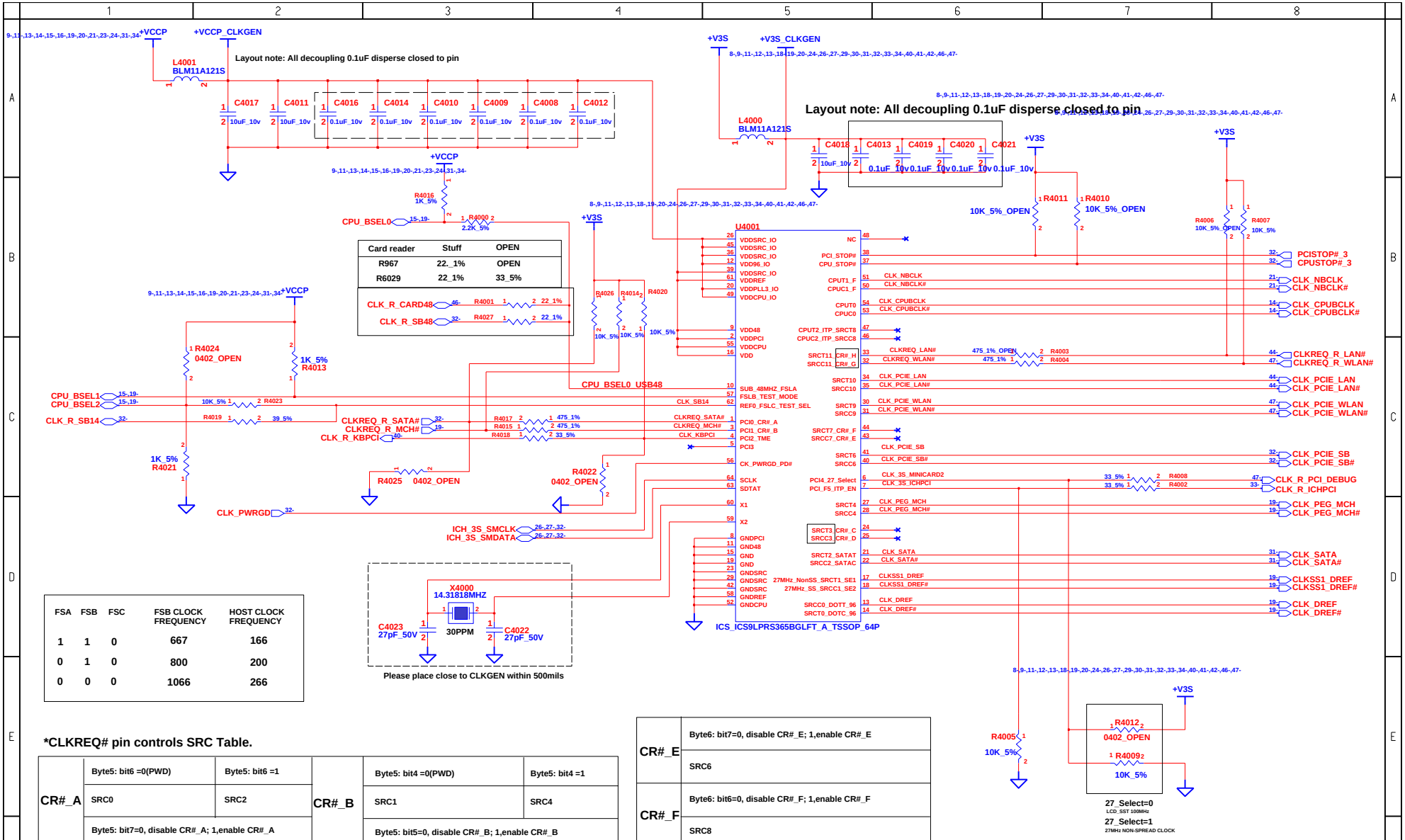

FSA	FSB	FSC	FSB CLOCK FREQUENCY	HOST CLOCK FREQUENCY
1	1	0	667	166
0	1	0	800	200
0	0	0	1066	266

***CLKREQ# pin controls SRC Table.**

CR#_A	Byte5: bit6 =0(PWD)	Byte5: bit6 =1	CR#_B	Byte5: bit4 =0(PWD)	Byte5: bit4 =1
	SRC0	SRC2		SRC1	SRC4
	Byte5: bit7=0, disable CR#_A; 1,enable CR#_A			Byte5: bit5=0, disable CR#_B; 1,enable CR#_B	

CR#_C	Byte5: bit2 =0(PWD)	Byte5: bit2 =1	CR#_D	Byte5: bit0 =0(PWD)	Byte5: bit0 =1
	SRC0	SRC2		SRC1	SRC4
	Byte5: bit3=0, disable CR#_C; 1,enable CR#_C			Byte5: bit1=0, disable CR#_D; 1,enable CR#_D	

CR#_E	Byte6: bit7=0, disable CR#_E; 1,enable CR#_E
	SRC6
CR#_F	Byte6: bit6=0, disable CR#_F; 1,enable CR#_F
	SRC8
CR#_G	Byte6: bit5=0, disable CR#_G; 1,enable CR#_G
	SRC9
CR#_H	Byte6: bit4=0, disable CR#_H; 1,enable CR#_H
	SRC10

CHANGE by	KOBE	23-Mar-2010	

INVENTEC

TITLE MAS10M CLOCK_GENERATOR

SIZE	CODE	DOC. NUMBER	REV
A3	CS	1310A23553-0-0	A02

SHEET 13 OF 52

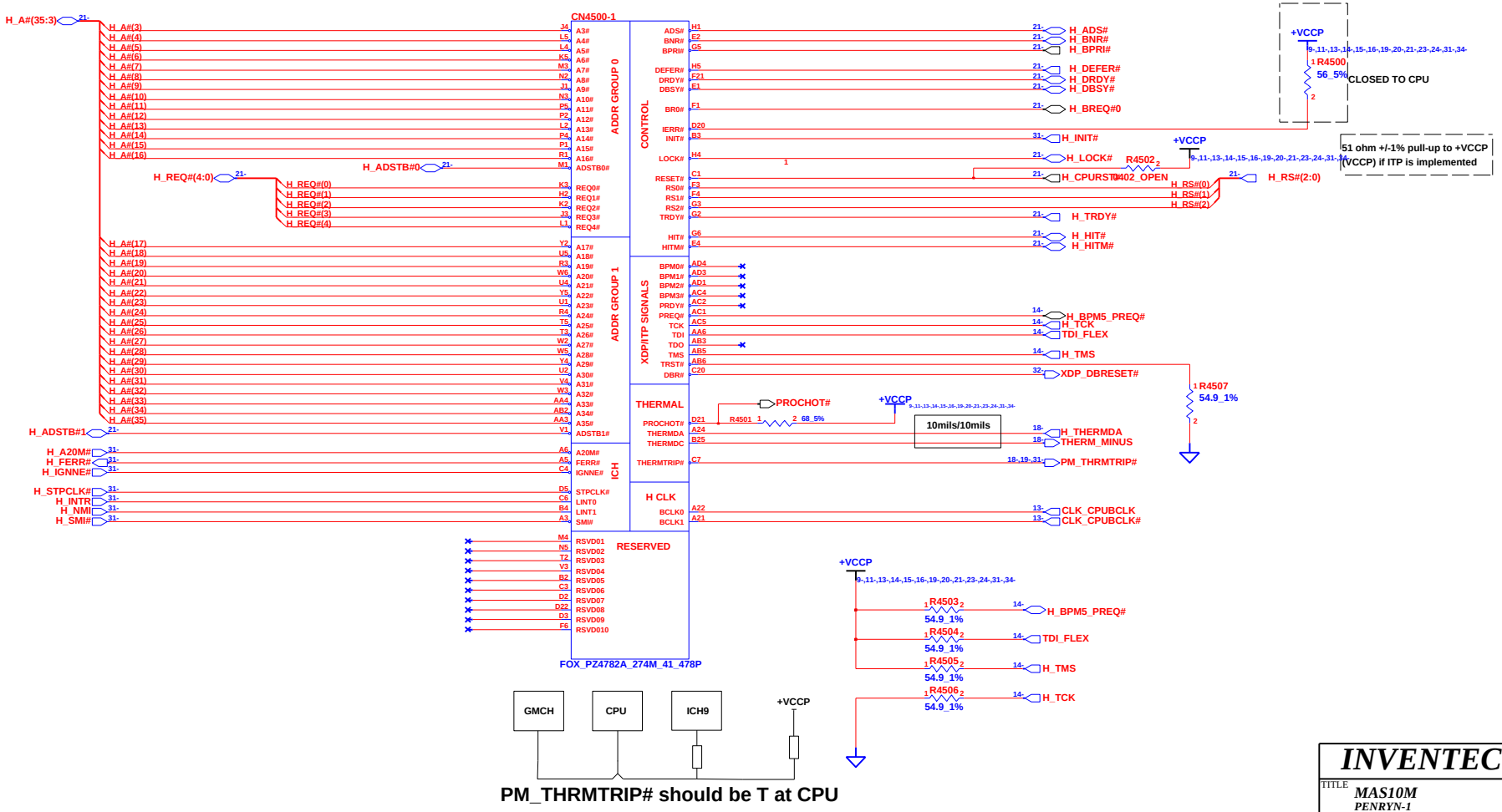

INVENTEC			
TITLE MAS10M PENRYN-1			
SIZE A3	CODE CS	DOC. NUMBER 1310A23553-0-0	REV A02
CHANGE by KOBE	23-Mar-2010	SHEET 14 OF 52	

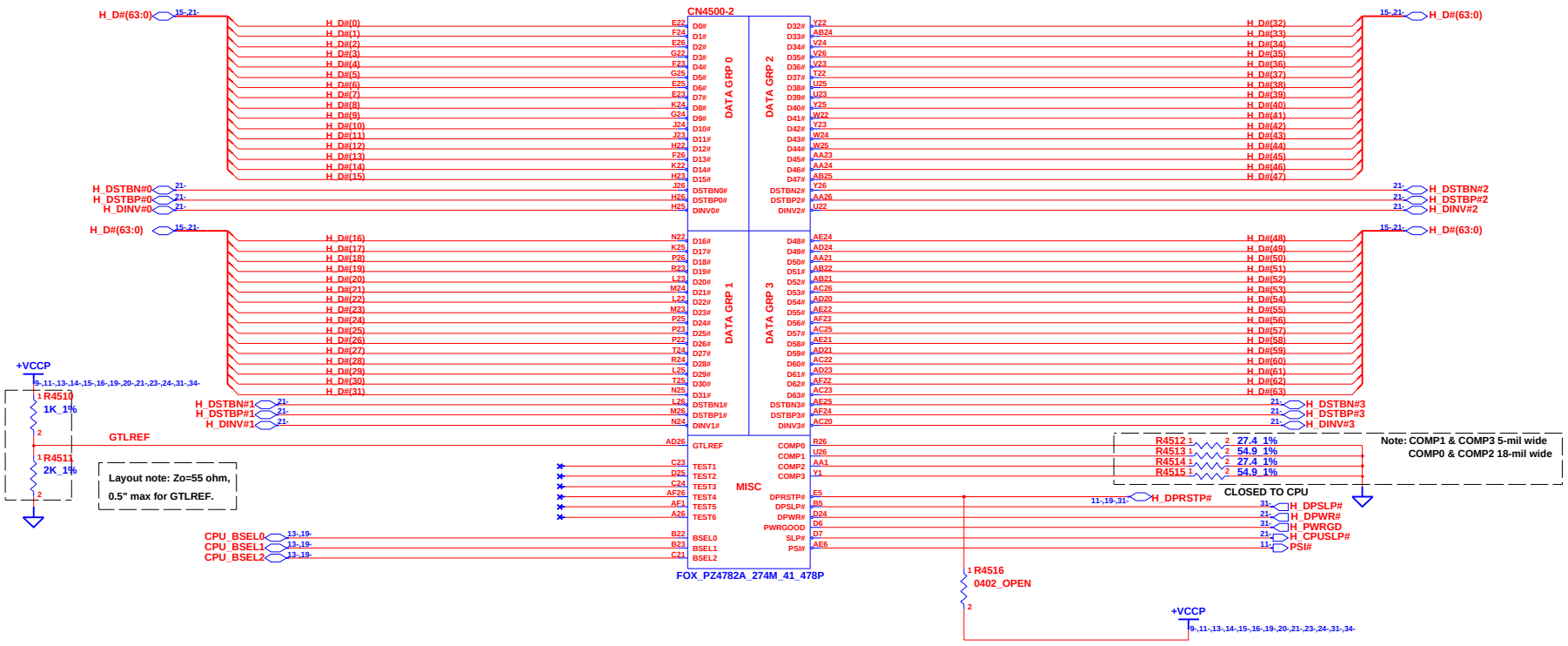

INVENTEC			
TITLE MAS10M PENRYN-2			
SIZE A3	CODE CS	DOC. NUMBER 1310A23553-0-0	REV A02
CHANGE by KOBE	23-Mar-2010	SHEET 15 OF 52	

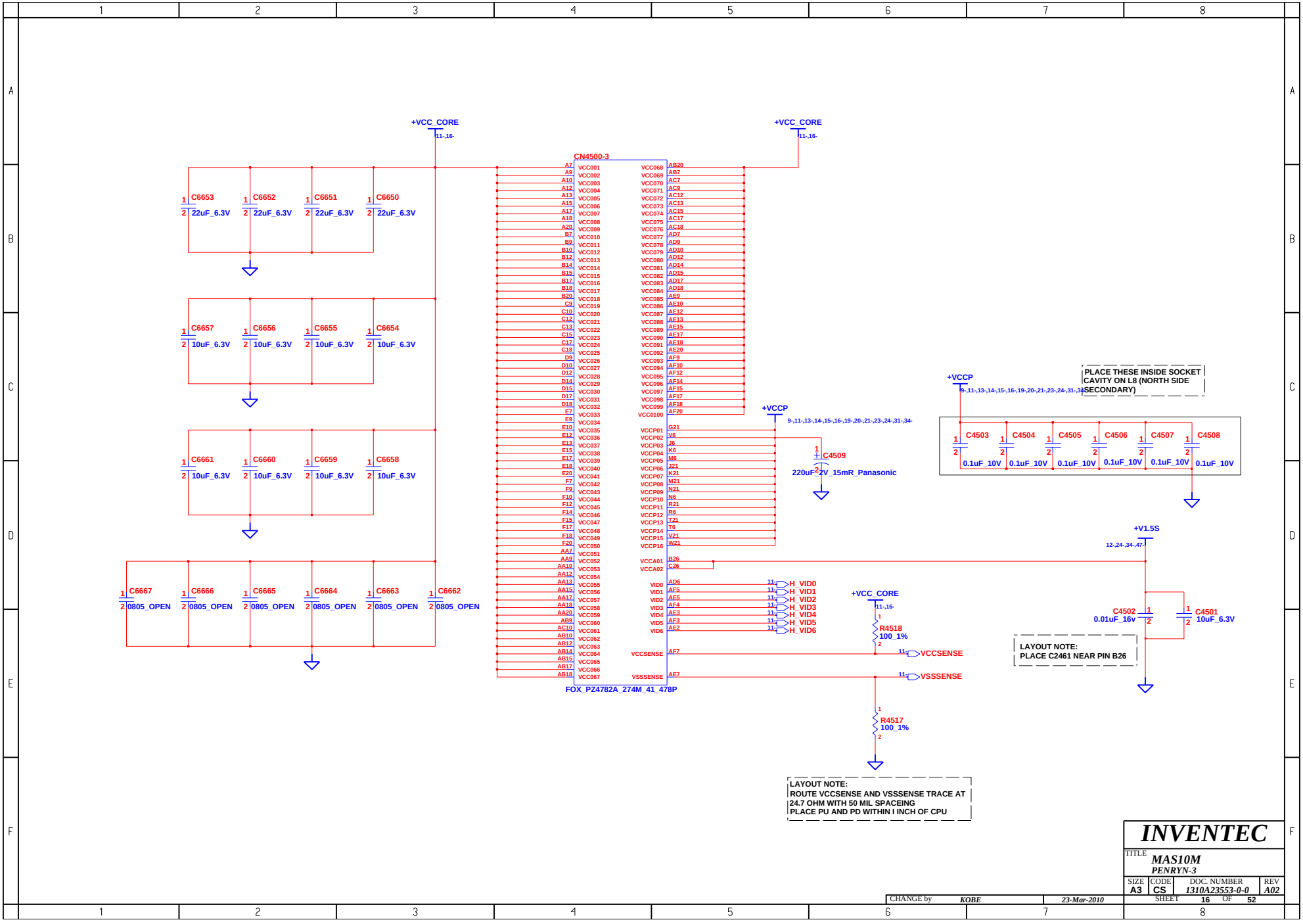
+VCC_CORE
11-,16-
CN4500-3
FOX_PZ4782A_274M_41_478P
C6653 22uF_6.3V
C6652 22uF_6.3V
C6651 22uF_6.3V
C6650 22uF_6.3V
C6657 10uF_6.3V
C6656 10uF_6.3V
C6655 10uF_6.3V
C6654 10uF_6.3V
C6661 10uF_6.3V
C6660 10uF_6.3V
C6659 10uF_6.3V
C6658 10uF_6.3V
C6667 0805_OPEN
C6666 0805_OPEN
C6665 0805_OPEN
C6664 0805_OPEN
C6663 0805_OPEN
C6662 0805_OPEN
+VCCP
9-,11-,13-,14-,15-,16-,19-,20-,21-,23-,24-,31-,34-
C4509
220uF_2V_15mR_Panasonic
PLACE THESE INSIDE SOCKET CAVITY ON L8 (NORTH SIDE SECONDARY)
C4503 0.1uF_10V
C4504 0.1uF_10V
C4505 0.1uF_10V
C4506 0.1uF_10V
C4507 0.1uF_10V
C4508 0.1uF_10V
+V1.5S
12-,24-,34-,47-
H_VID0
H_VID1
H_VID2
H_VID3
H_VID4
H_VID5
H_VID6
R4518 100_1%
VCCSENSE
VSSSENSE
R4517 100_1%
C4502 0.01uF_16v
C4501 10uF_6.3V
LAYOUT NOTE:
PLACE C2461 NEAR PIN B26
LAYOUT NOTE:
ROUTE VCCSENSE AND VSSSENSE TRACE AT 24.7 OHM WITH 50 MIL SPACEING
PLACE PU AND PD WITHIN I INCH OF CPU
INVENTEC
TITLE MAS10M
PENRYN-3
SIZE A3
CODE CS
DOC. NUMBER 1310A23553-0-0
REV A02
SHEET 16 OF 52
CHANGE by KOBE
23-Mar-2010

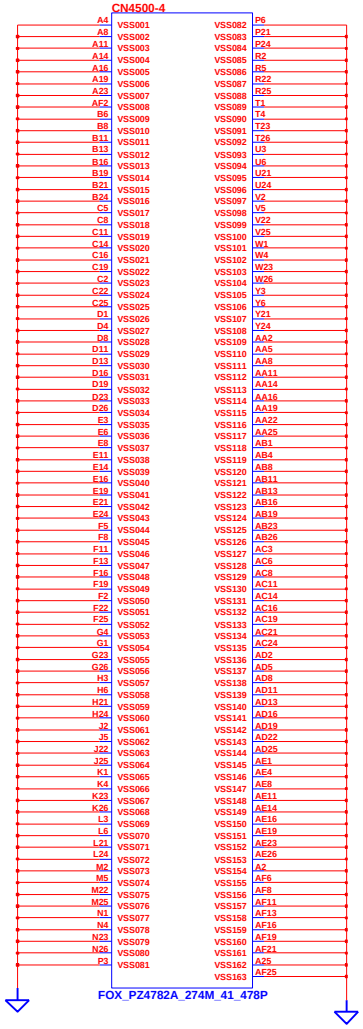

CHANGE by	KOBE	23-Mar-2010	

INVENTEC

TITLE **MAS10M**
PENRYN-4

SIZE	CODE	DOC. NUMBER	REV
A3	CS	1310A23553-0-0	A02

SHEET 17 OF 52

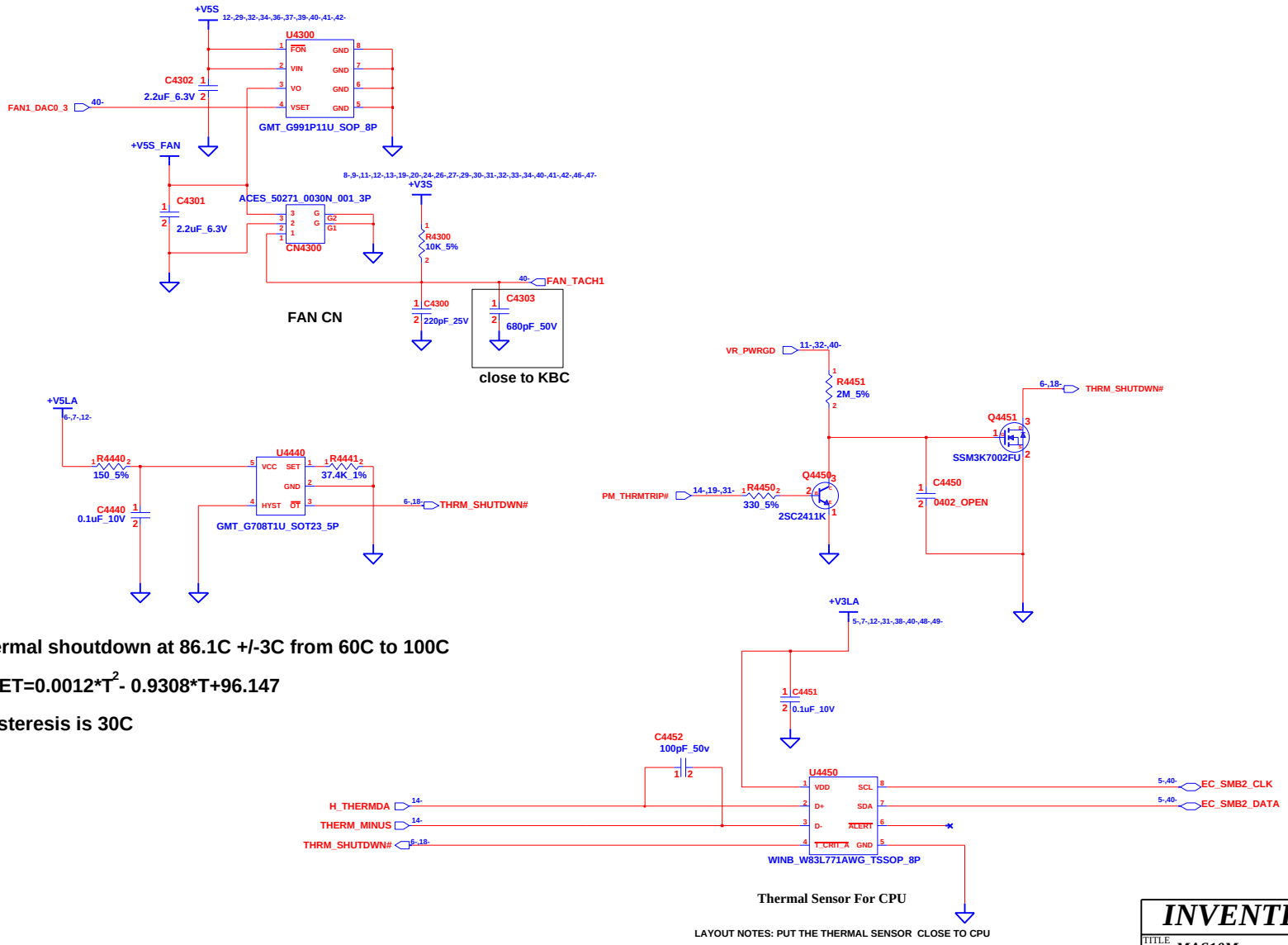

Thermal shoutdown at 86.1C +/-3C from 60C to 100C

RSET=0.0012*T^2- 0.9308*T+96.147

Hysteresis is 30C

LAYOUT NOTES: PUT THE THERMAL SENSOR CLOSE TO CPU

CHANGE by	KOBE	23-Mar-2010	

INVENTEC

TITLE: *MAS10M*
THERMAL&FAN CONTROLLER

SIZE	CODE	DOC. NUMBER	REV
A3	CS	1310A23553-0-0	A02

SHEET 18 OF 52

MCH_CFG(5)	LOW=DMIx2 HIGH=DMIx4

MCH_CFG(7) (CPU Strap)	LOW=RSVD HIGH=Mobile CPU

MCH_CFG(9) PCIE Graphics Lane	LOW=Reverse Lane HIGH=Normal operation

NOTE : USE 4K-OHM RESISTOR WHEN INSTALLING PULL-UP/PULL-DOWN RESISTOR ON ANY MCH-CFG CONNECTION/PINS.

MCH_CFG(13:12) XOR/ALLZ	00=PARTIAL CLOCK GATING DISABLE 01=XOR MODE ENABLE 10=ALL-Z MODE ENABLE 11=NORMAL OPERATION

MCH_CFG(16) (FSB Dynamic ODT)	LOW=Dynamic ODT Disable HIGH=Dynamic ODT Enable

MCH_CFG(6)	LOW=TPM Enable HIGH=TPM Disable

NOTE: CFG[2:0] STRP : 010b : 800 MT/S
011b : 667 MT/S

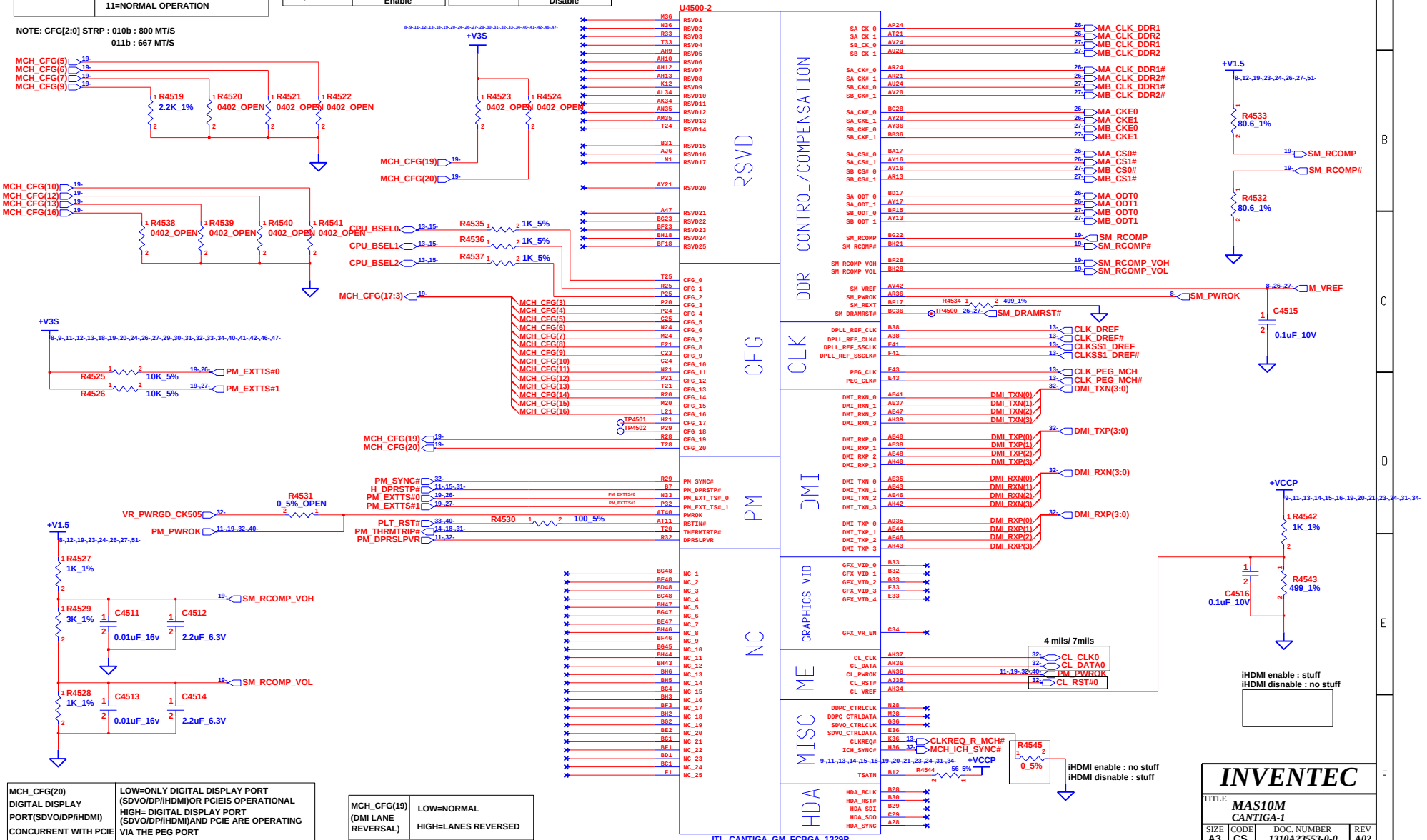

MCH_CFG(20) DIGITAL DISPLAY PORT(SDVO/DP/iHDMI) CONCURRENT WITH PCIE	LOW=ONLY DIGITAL DISPLAY PORT (SDVO/DP/iHDMI)OR PCIEIS OPERATIONAL HIGH= DIGITAL DISPLAY PORT (SDVO/DP/iHDMI)AND PCIE ARE OPERATING VIA THE PEG PORT

MCH_CFG(19) (DMI LANE REVERSAL)	LOW=NORMAL HIGH=LANES REVERSED

INVENTEC

TITLE: MAS10M
CANTIGA-1

SIZE	CODE	DOC. NUMBER	REV
A3	CS	1310A23553-0-0	A02

SHEET 19 OF 52

CHANGE by KOBE 23-Mar-2010

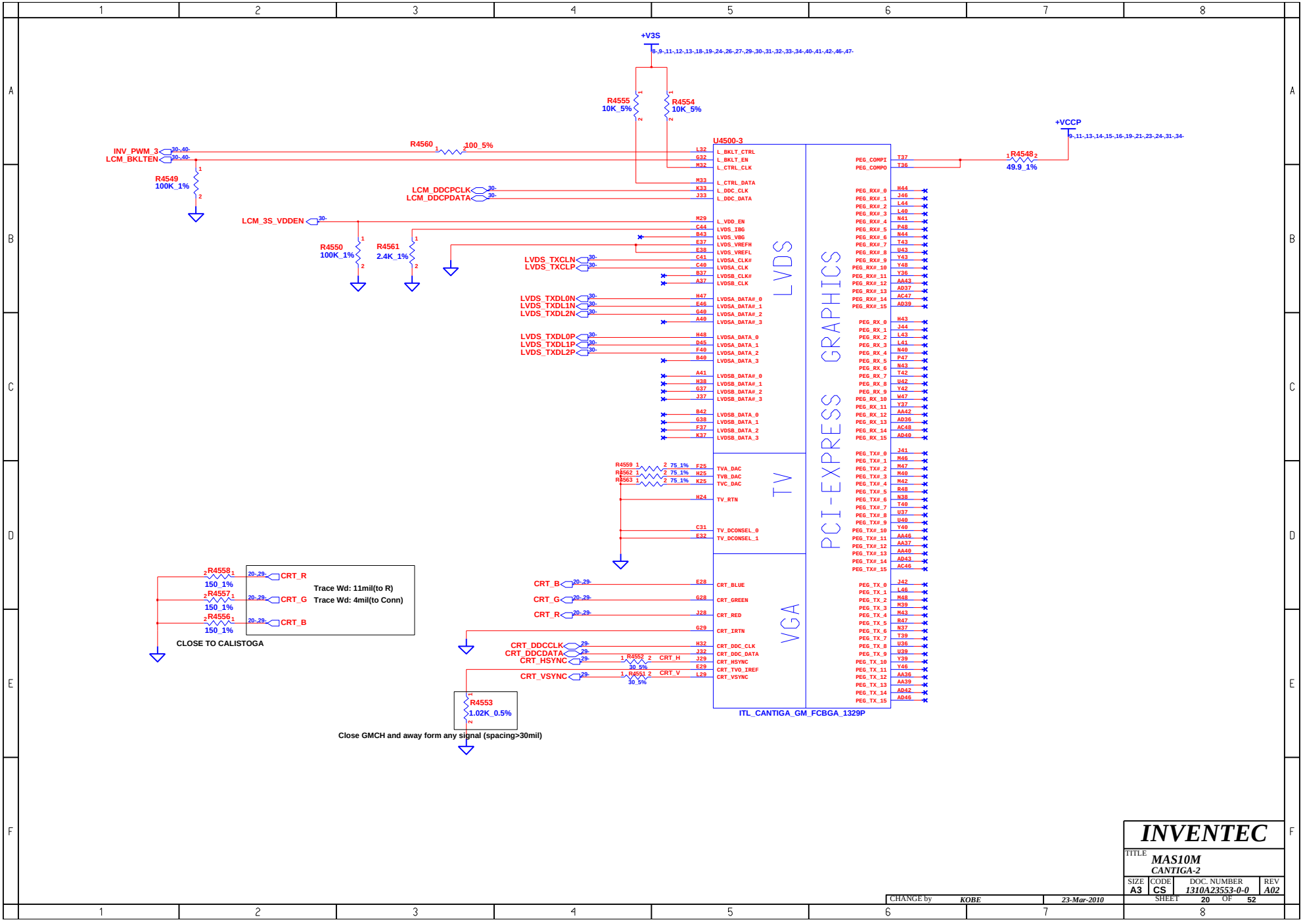

INVENTEC			
TITLE MAS10M CANTIGA-2			
SIZE A3	CODE CS	DOC. NUMBER 1310A23553-0-0	REV A02
CHANGE by KOBE	23-Mar-2010	SHEET 20 OF 52	

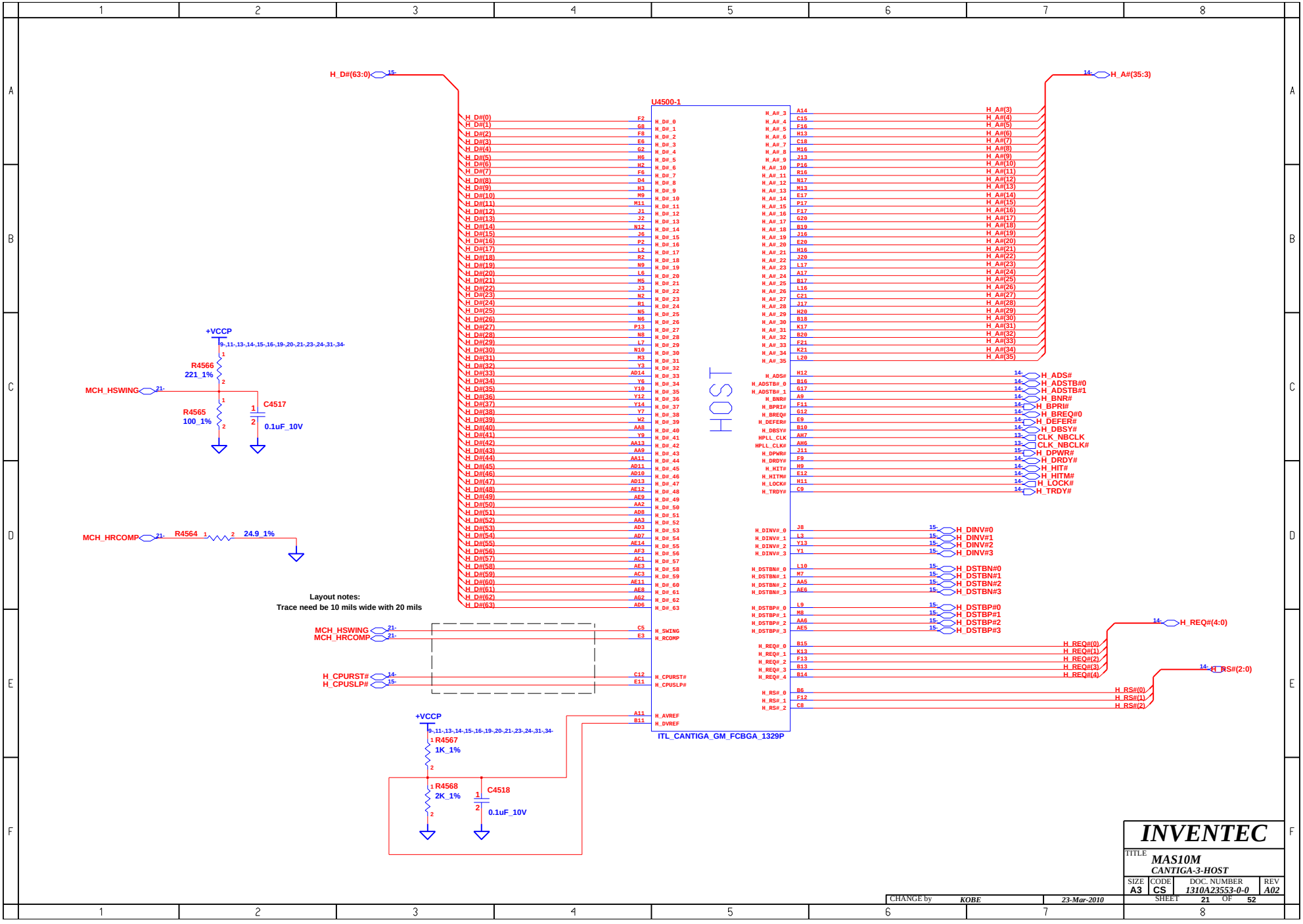
U4500-1
HOST
ITL_CANTIGA_GM_FCBGA_1329P
H_D#(63:0)
H_A#(35:3)
H_ADS#
H_ADSTB#0
H_ADSTB#1
H_BNR#
H_BPRI#
H_BREQ#0
H_DEFER#
H_DBSY#
CLK_NBCLK
CLK_NBCLK#
H_DPWR#
H_DRDY#
H_HIT#
H_HITM#
H_LOCK#
H_TRDY#
H_DINV#0
H_DINV#1
H_DINV#2
H_DINV#3
H_DSTBN#0
H_DSTBN#1
H_DSTBN#2
H_DSTBN#3
H_DSTBP#0
H_DSTBP#1
H_DSTBP#2
H_DSTBP#3
H_REQ#(4:0)
H_RS#(2:0)
MCH_HSWING
MCH_HRCOMP
H_CPURST#
H_CPUSLP#
+VCCP
R4566
221_1%
R4565
100_1%
C4517
0.1uF_10V
R4564
24.9_1%
R4567
1K_1%
R4568
2K_1%
C4518
0.1uF_10V
Layout notes:
Trace need be 10 mils wide with 20 mils
INVENTEC
TITLE
MAS10M
CANTIGA-3-HOST
SIZE A3
CODE CS
DOC. NUMBER 1310A23553-0-0
REV A02
SHEET 21 OF 52
CHANGE by KOBE
23-Mar-2010

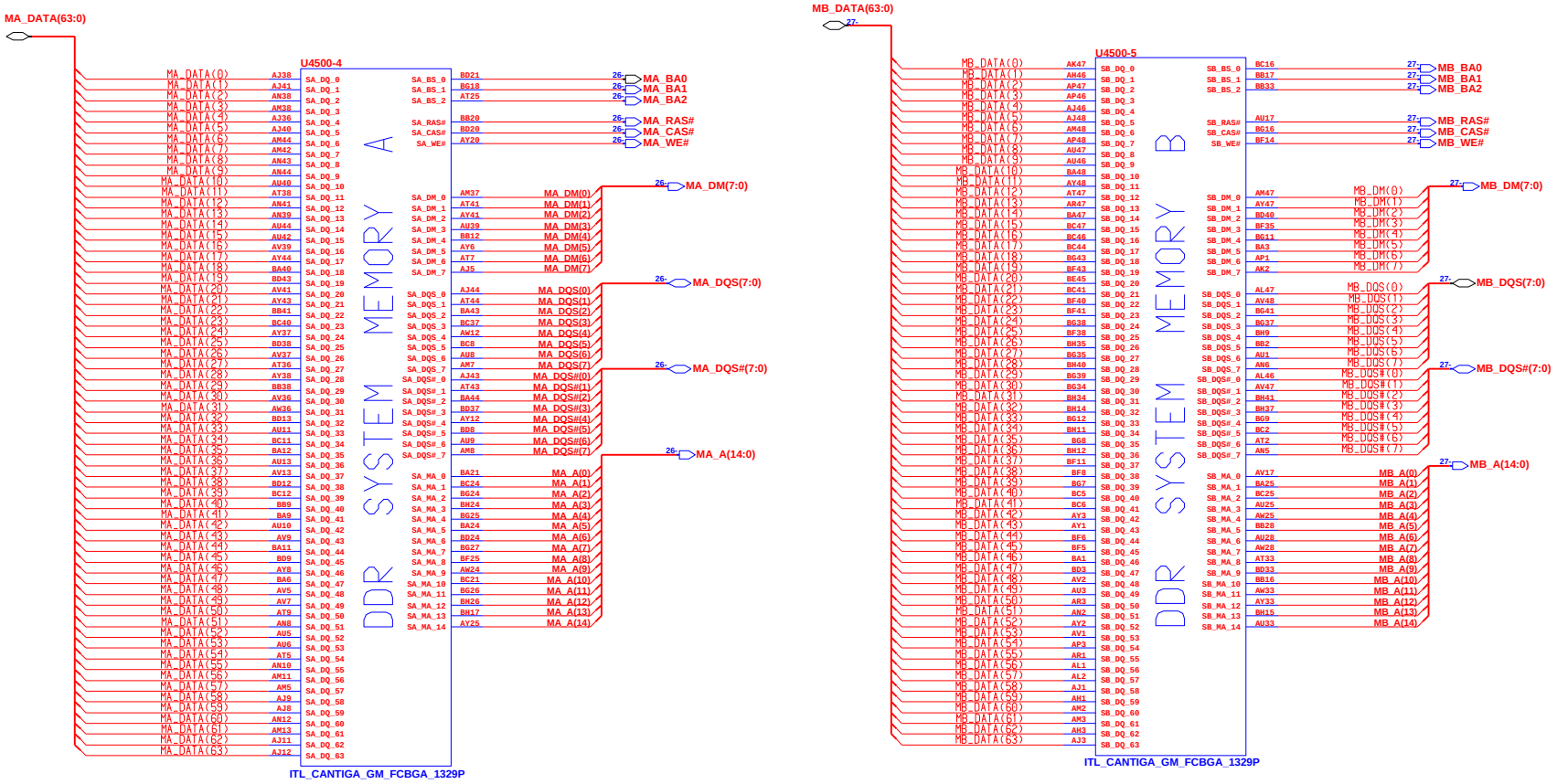

CHANGE by	KOBE	23-Mar-2010	

INVENTEC

TITLE **MAS10M**
CANTIGA-4-DDR2

SIZE	CODE	DOC. NUMBER	REV
A3	CS	1310A23553-0-0	A02

SHEET 22 OF 52

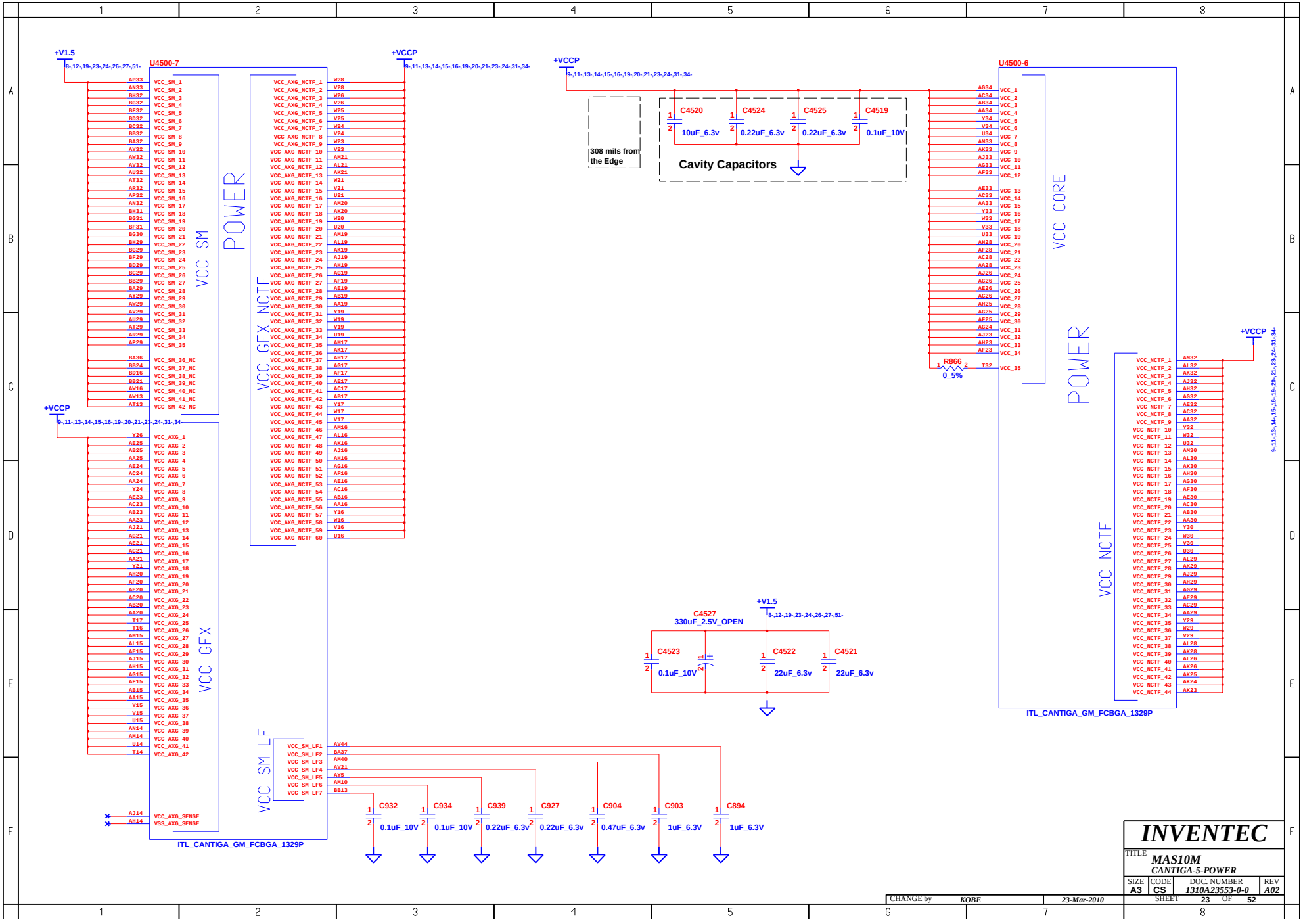
+V1.5
U4500-7
+VCCP
VCC_SM
POWER
VCC_GFX_NCTF
VCC_GFX
VCC_SM_LF
ITL_CANTIGA_GM_FCBGA_1329P
308 mils from the Edge
C4520 10uF_6.3v
C4524 0.22uF_6.3v
C4525 0.22uF_6.3v
C4519 0.1uF_10V
Cavity Capacitors
U4500-6
VCC CORE
R866 0_5%
VCC_NCTF
ITL_CANTIGA_GM_FCBGA_1329P
C4527 330uF_2.5V_OPEN
C4523 0.1uF_10V
C4522 22uF_6.3v
C4521 22uF_6.3v
C932 0.1uF_10V
C934 0.1uF_10V
C939 0.22uF_6.3v
C927 0.22uF_6.3v
C904 0.47uF_6.3v
C903 1uF_6.3V
C894 1uF_6.3V
INVENTEC
TITLE
MAS10M
CANTIGA-5-POWER
SIZE A3
CODE CS
DOC. NUMBER 1310A23553-0-0
REV A02
SHEET 23 OF 52
CHANGE by KOBE
23-Mar-2010

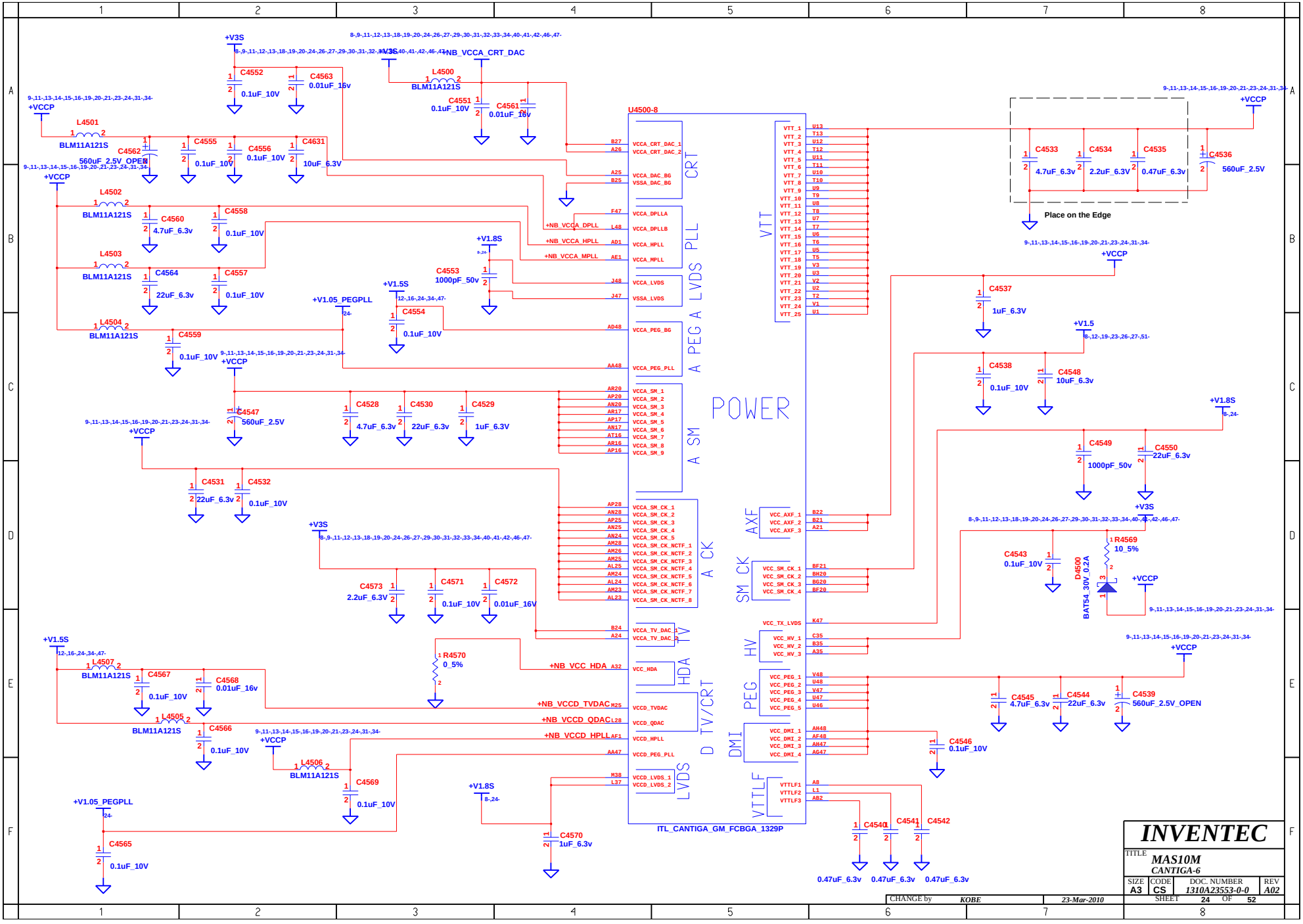

INVENTEC			
TITLE MAS10M CANTIGA-6			
SIZE A3	CODE CS	DOC. NUMBER 1310A23553-0-0	REV A02
CHANGE by KOBE	23-Mar-2010	SHEET 24 OF 52	

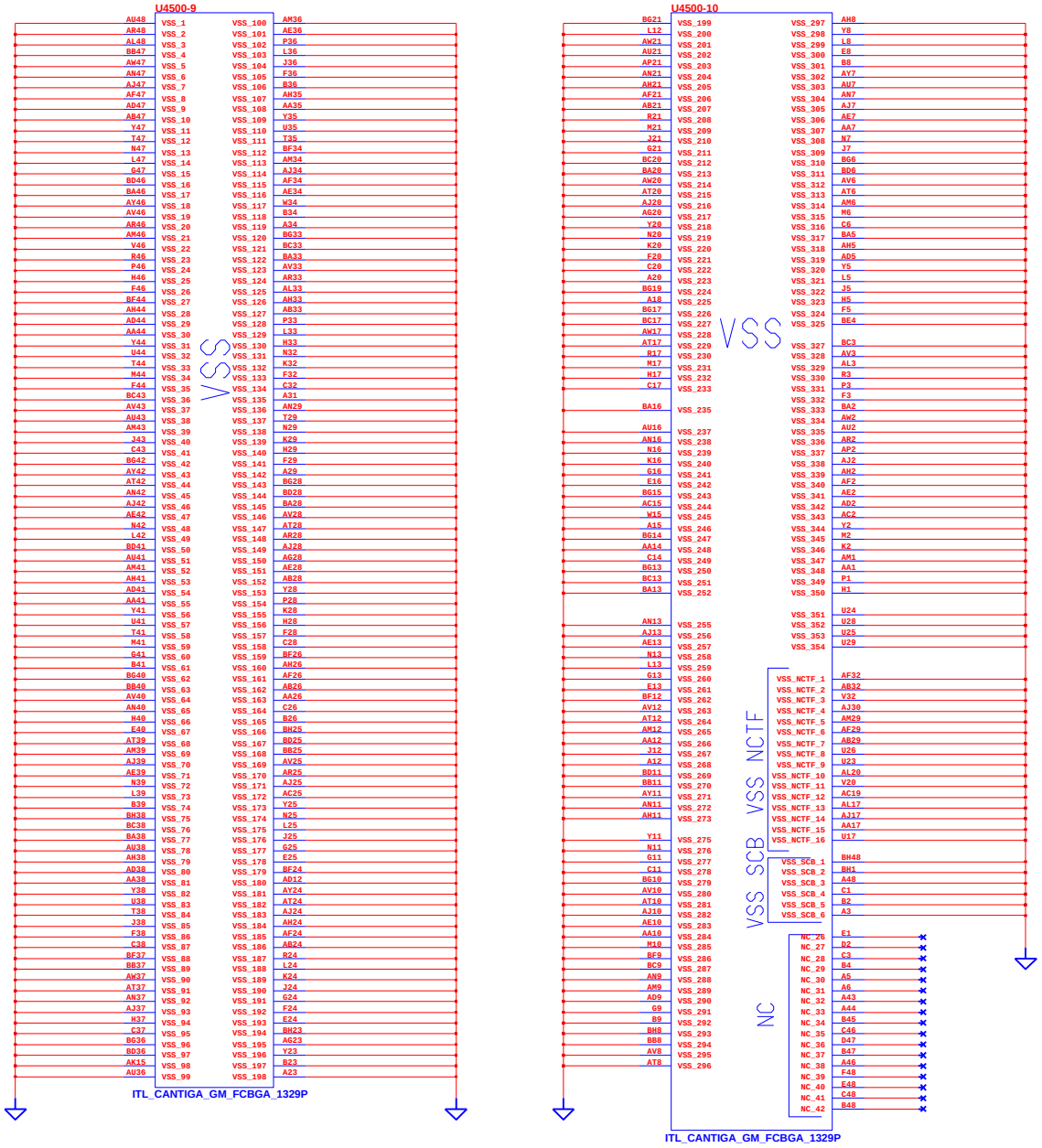

CHANGE by	KOBE	23-Mar-2010	INVENTEC		
TITLE	MAS10M CANTIGA-7				
SIZE A3	CODE CS	DOC. NUMBER 1310A23553-0-0		REV A02	
SHEET 25 OF 52					

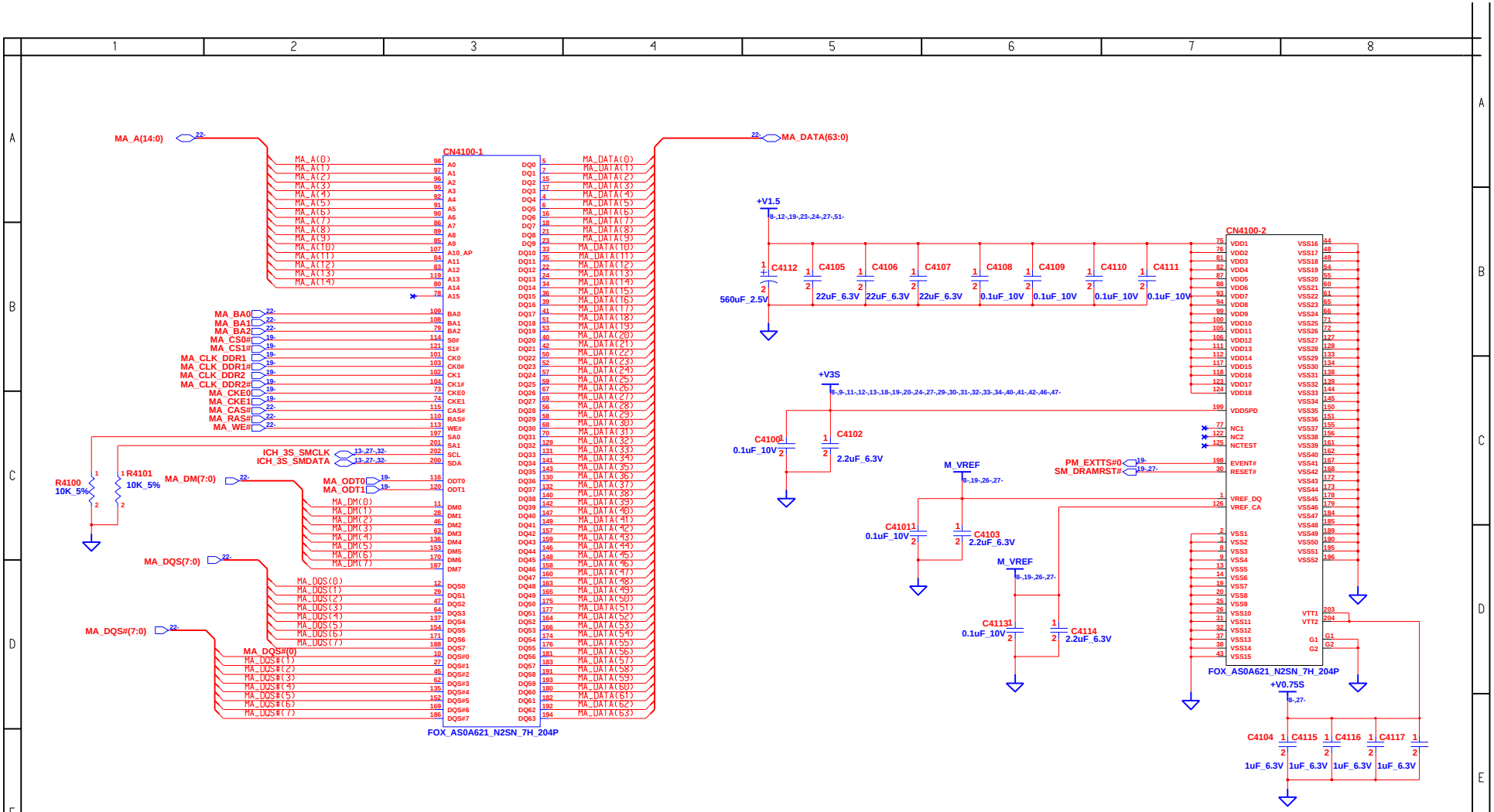

SO DIMM0

SLOT A

INVENTEC			
TITLE	MAS10M DDR3-DIMM-0		
SIZE A3	CODE CS	DOC. NUMBER 1310A23553-0-0	REV A02
CHANGE by KOBE	23-Mar-2010	SHEET 26 OF 52	

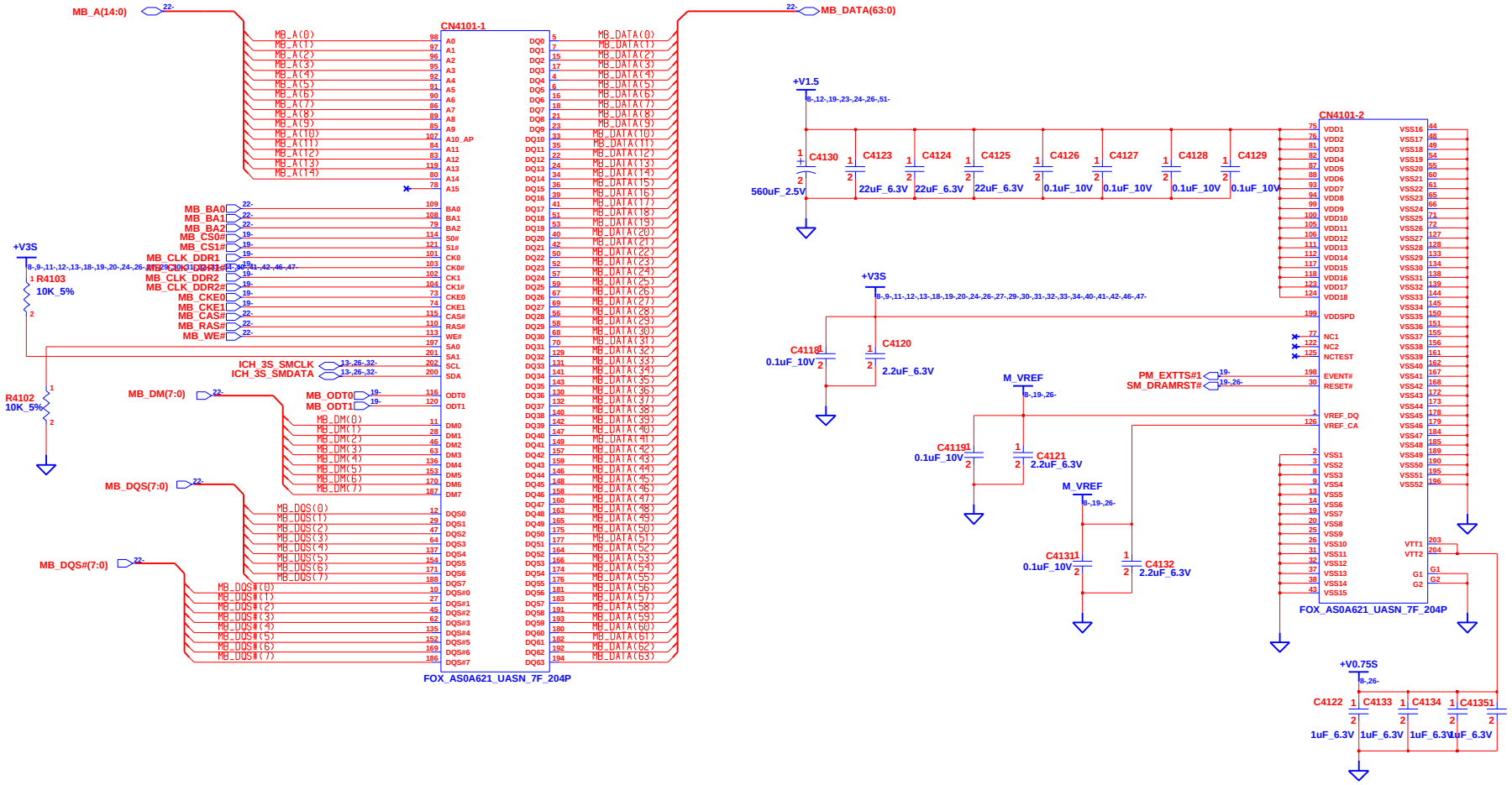

SO DIMM1

SLOT B

INVENTEC			
TITLE MAS10M DDR3-DIMM1			
SIZE A3	CODE CS	DOC. NUMBER 1310A23553-0-0	REV A02
CHANGE by KOBE	23-Mar-2010	SHEET 27 OF 52	

BLANK

INVENTEC					
TITLE MAS10M BLANK					
SIZE A3	CODE CS	DOC. NUMBER 1310A23553-0-0			REV A02
CHANGE by KOBE		27-Sep-2003	SHEET 28 OF 52		

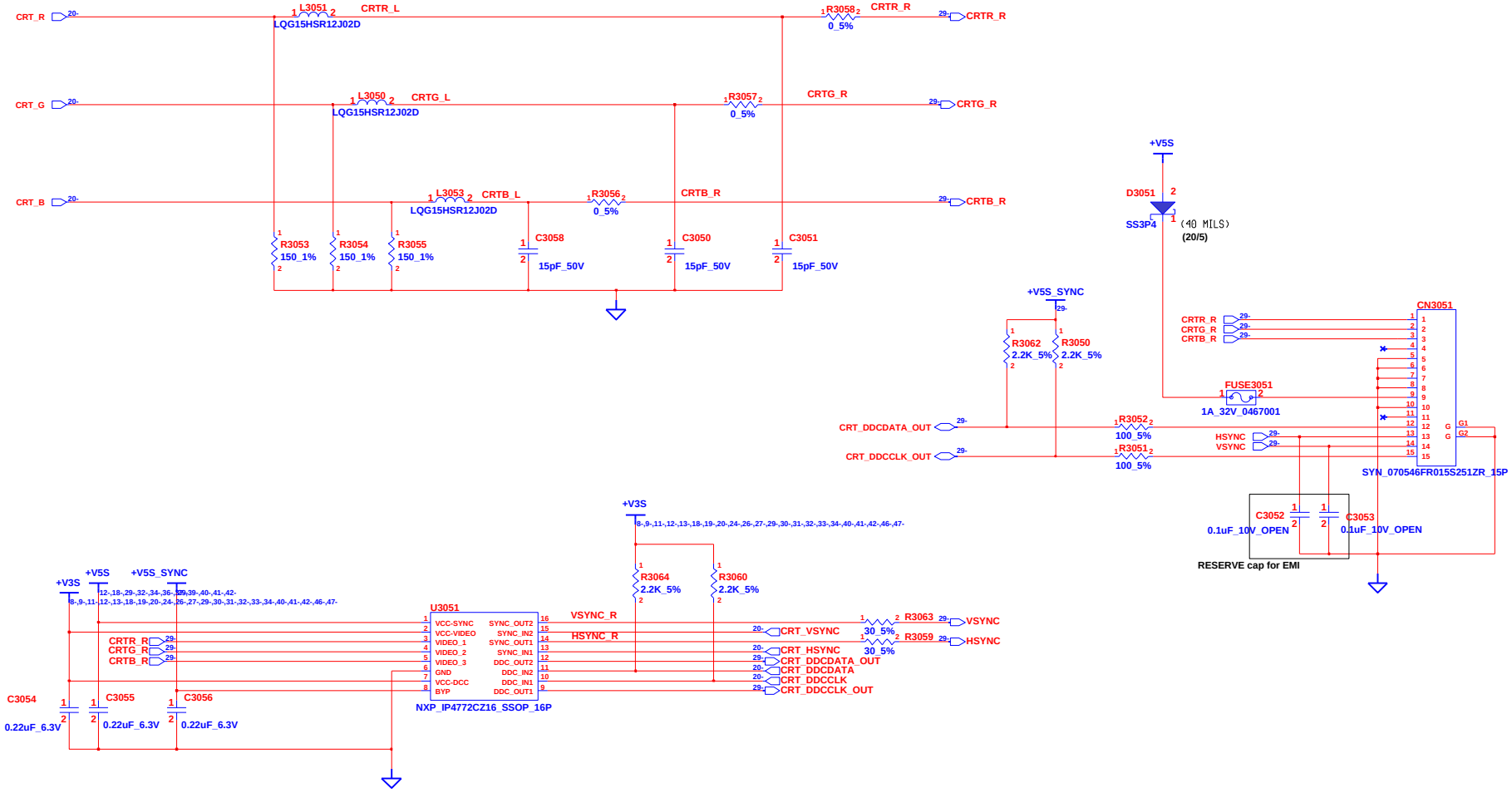

INVENTEC

TITLE **MAS10M**
CRT CONN

SIZE	CODE	DOC. NUMBER	REV
A3	CS	1310A23553-0-0	A02

SHEET 29 OF 52

CHANGE by KOBE 23-Mar-2010

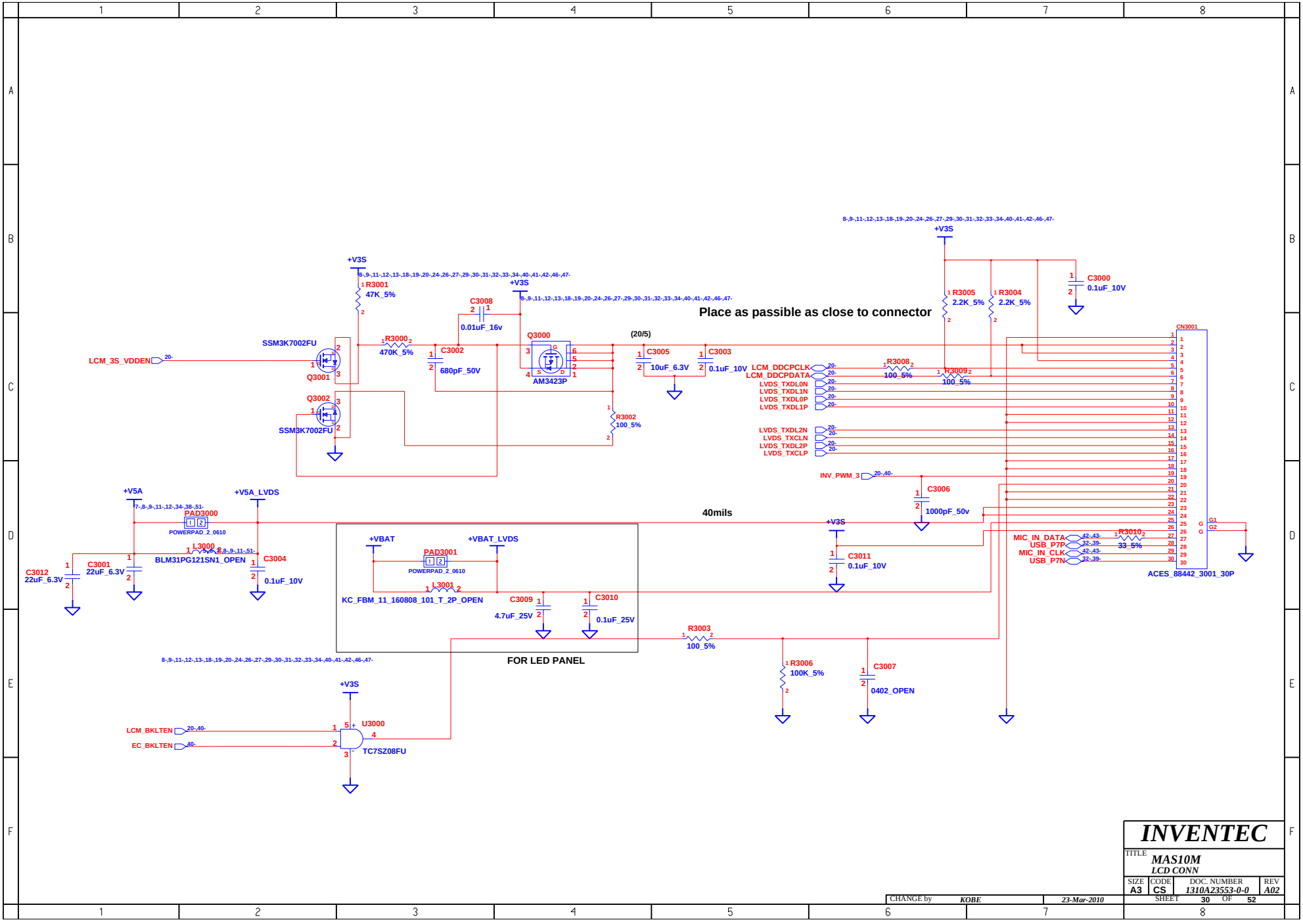

INVENTEC

TITLE
MAS10M
LCD CONN

SIZE	CODE	DOC. NUMBER	REV
A3	CS	1310A23553-0-0	A02

SHEET 30 OF 52

CHANGE by KOBE 23-Mar-2010

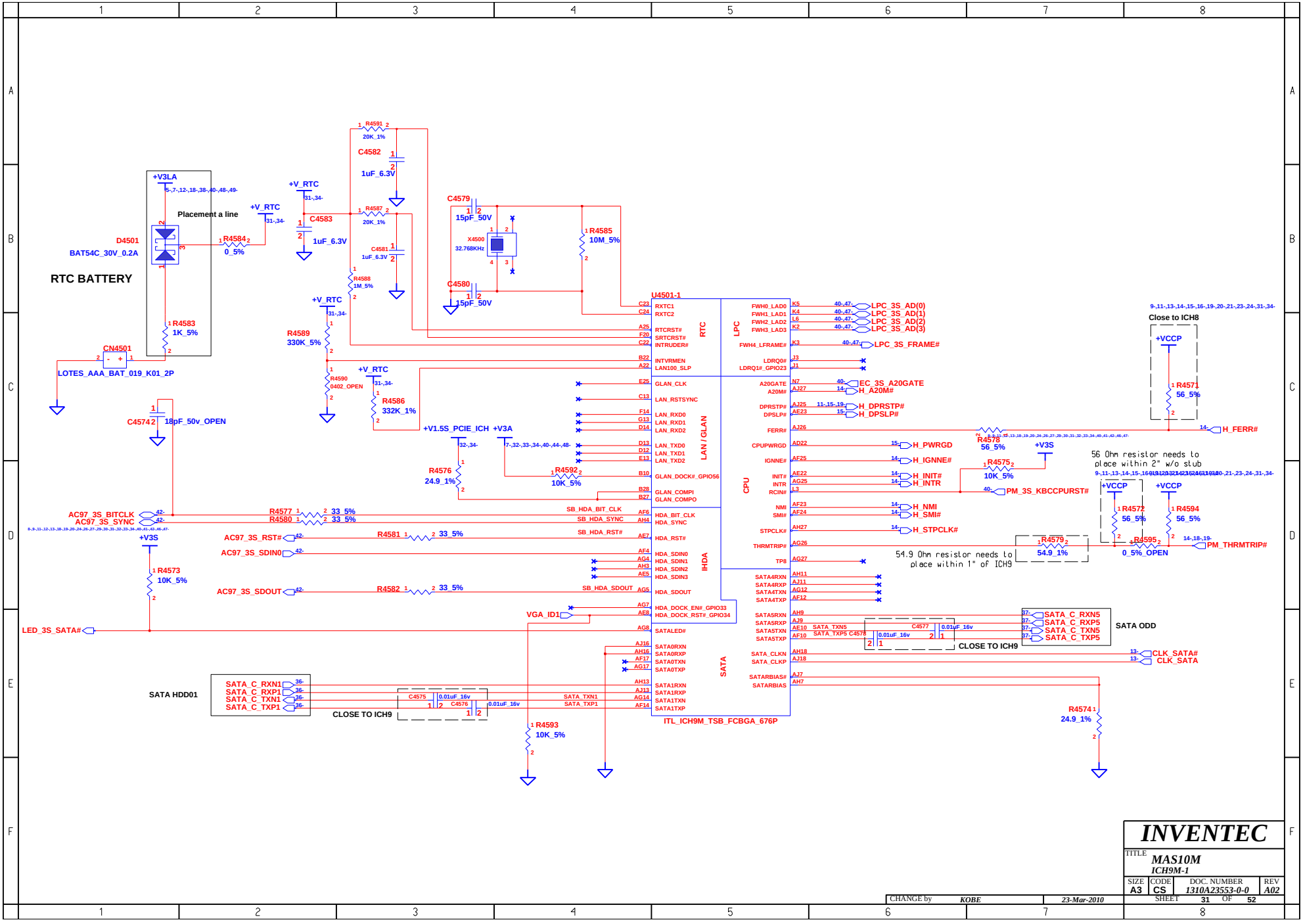
RTC BATTERY
Placement a line
D4501
BAT54C_30V_0.2A
+V3LA
R4584 0_5%
R4583 1K_5%
CN4501
LOTES_AAA_BAT_019_K01_2P
C4574 18pF_50v_OPEN
+V_RTC
C4583 1uF_6.3V
R4591 20K_1%
C4582 1uF_6.3V
R4587 20K_1%
C4581 1uF_6.3V
R4588 1M_5%
R4589 330K_5%
R4590 0402_OPEN
R4586 332K_1%
C4579 15pF_50V
X4500 32.768KHz
C4580 15pF_50V
R4585 10M_5%
U4501-1
ITL_ICH9M_TSB_FCBGA_676P
RTC
LPC
LAN / GLAN
CPU
IHDA
SATA
LPC_3S_AD(0)
LPC_3S_AD(1)
LPC_3S_AD(2)
LPC_3S_AD(3)
LPC_3S_FRAME#
EC_3S_A20GATE
H_A20M#
H_DPRSTP#
H_DPSLP#
H_FERR#
H_PWRGD
H_IGNNE#
H_INIT#
H_INTR
PM_3S_KBCCPURST#
H_NMI
H_SMI#
H_STPCLK#
PM_THRMTRIP#
Close to ICH8
+VCCP
R4571 56_5%
R4578 56_5%
+V3S
R4575 10K_5%
56 Ohm resistor needs to place within 2" w/o stub
R4572 56_5%
R4594 56_5%
R4579 54.9_1%
R4595 0_5%_OPEN
54.9 Ohm resistor needs to place within 1" of ICH9
+V1.5S_PCIE_ICH
+V3A
R4576 24.9_1%
R4592 10K_5%
AC97_3S_BITCLK
AC97_3S_SYNC
R4577 33_5%
R4580 33_5%
AC97_3S_RST#
R4581 33_5%
AC97_3S_SDIN0
AC97_3S_SDOUT
R4582 33_5%
R4573 10K_5%
LED_3S_SATA#
VGA_ID1
R4593 10K_5%
SATA ODD
SATA_C_RXN5
SATA_C_RXP5
SATA_C_TXN5
SATA_C_TXP5
C4577 0.01uF_16v
C4578 0.01uF_16v
CLOSE TO ICH9
CLK_SATA#
CLK_SATA
R4574 24.9_1%
SATA HDD01
SATA_C_RXN1
SATA_C_RXP1
SATA_C_TXN1
SATA_C_TXP1
C4575 0.01uF_16v
C4576 0.01uF_16v
CLOSE TO ICH9
INVENTEC
TITLE
MAS10M
ICH9M-1
SIZE A3
CODE CS
DOC. NUMBER 1310A23553-0-0
REV A02
SHEET 31 OF 52
CHANGE by KOBE
23-Mar-2010

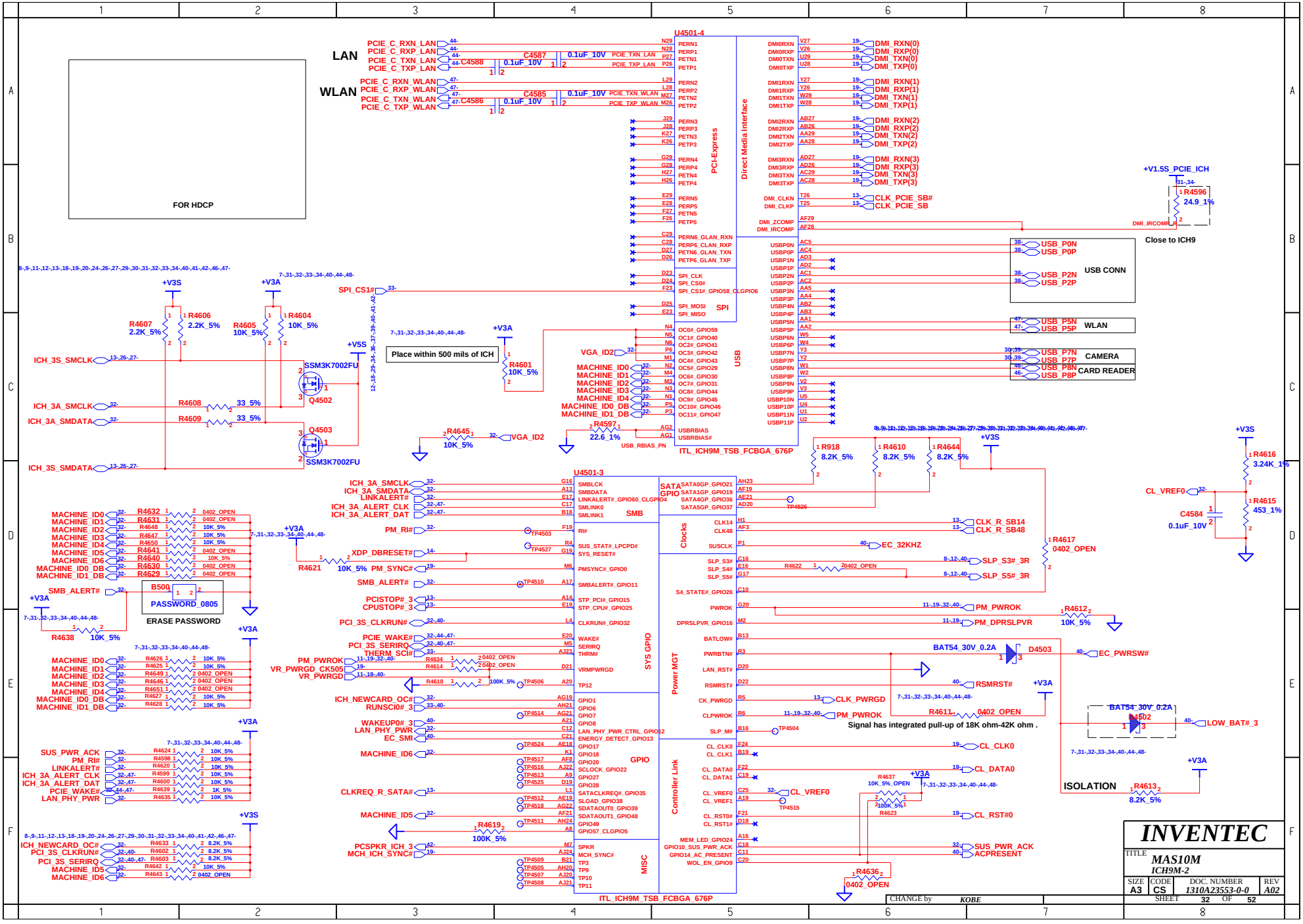
U4501-4
LAN
WLAN
PCIE_C_RXN_LAN
PCIE_C_RXP_LAN
PCIE_C_TXN_LAN
PCIE_C_TXP_LAN
PCIE_C_RXN_WLAN
PCIE_C_RXP_WLAN
PCIE_C_TXN_WLAN
PCIE_C_TXP_WLAN
C4587 0.1uF_10V
C4588 0.1uF_10V
C4585 0.1uF_10V
C4586 0.1uF_10V
PCIE_TXN_LAN
PCIE_TXP_LAN
PCIE_TXN_WLAN
PCIE_TXP_WLAN
PCI-Express
Direct Media Interface
DMI_RXN(0)
DMI_RXP(0)
DMI_TXN(0)
DMI_TXP(0)
DMI_RXN(1)
DMI_RXP(1)
DMI_TXN(1)
DMI_TXP(1)
DMI_RXN(2)
DMI_RXP(2)
DMI_TXN(2)
DMI_TXP(2)
DMI_RXN(3)
DMI_RXP(3)
DMI_TXN(3)
DMI_TXP(3)
CLK_PCIE_SB#
CLK_PCIE_SB
+V1.5S_PCIE_ICH
R4596 24.9_1%
DMI_IRCOMP
Close to ICH9
USB_P0N
USB_P0P
USB_P2N
USB_P2P
USB CONN
USB_P5N
USB_P5P
WLAN
USB_P7N
USB_P7P
CAMERA
USB_P8N
USB_P8P
CARD READER
SPI_CS1#
SPI_CLK
SPI_CS0#
SPI_MOSI
SPI_MISO
SPI
USB
VGA_ID2
MACHINE_ID0
MACHINE_ID1
MACHINE_ID2
MACHINE_ID3
MACHINE_ID4
MACHINE_ID0_DB
MACHINE_ID1_DB
R4597 22.6_1%
USB_RBIAS_PN
R4645 10K_5%
R4601 10K_5%
Place within 500 mils of ICH
+V3A
+V3S
+V5S
R4606 2.2K_5%
R4607 2.2K_5%
R4605 10K_5%
R4604 10K_5%
ICH_3S_SMCLK
ICH_3A_SMCLK
ICH_3A_SMDATA
ICH_3S_SMDATA
R4608 33_5%
R4609 33_5%
SSM3K7002FU
Q4502
Q4503
ITL_ICH9M_TSB_FCBGA_676P
R918 8.2K_5%
R4610 8.2K_5%
R4644 8.2K_5%
R4616 3.24K_1%
R4615 453_1%
CL_VREF0
C4584 0.1uF_10V
U4501-3
SMBLCK
SMBDATA
LINKALERT#_GPIO60_CLGPIO4
SMLINK0
SMLINK1
SMB
ICH_3A_SMCLK
ICH_3A_SMDATA
LINKALERT#
ICH_3A_ALERT_CLK
ICH_3A_ALERT_DAT
SATA GPIO
SATA0GP_GPIO21
SATA1GP_GPIO19
SATA4GP_GPIO36
SATA5GP_GPIO37
Clocks
CLK14
CLK48
SUSCLK
CLK_R_SB14
CLK_R_SB48
EC_32KHZ
R4617 0402_OPEN
SLP_S3#
SLP_S4#
SLP_S5#
SLP_S3#_3R
SLP_S5#_3R
S4_STATE#_GPIO26
PWROK
DPRSLPVR_GPIO16
PM_PWROK
PM_DPRSLPVR
R4612 10K_5%
Power MGT
BATLOW#
PWRBTN#
LAN_RST#
RSMRST#
CK_PWRGD
CLPWROK
SLP_M#
BAT54_30V_0.2A
D4503
EC_PWRSW#
RSMRST#
CLK_PWRGD
PM_PWROK
R4611 0402_OPEN
Signal has integrated pull-up of 18K ohm-42K ohm .
BAT54_30V_0.2A
D4502
LOW_BAT#_3
ISOLATION
R4613 8.2K_5%
Controller Link
CL_CLK0
CL_CLK1
CL_DATA0
CL_DATA1
CL_VREF0
CL_VREF1
CL_RST0#
CL_RST1#
CL_CLK0
CL_DATA0
CL_RST#0
R4637 10K_5%_OPEN
R4623 100K_5%
R4636 0402_OPEN
MEM_LED_GPIO24
GPIO10_SUS_PWR_ACK
GPIO14_AC_PRESENT
WOL_EN_GPIO9
SUS_PWR_ACK
ACPRESENT
SYS GPIO
RI#
SUS_STAT#_LPCPD#
SYS_RESET#
PMSYNC#_GPIO0
SMBALERT#_GPIO11
STP_PCI#_GPIO15
STP_CPU#_GPIO25
CLKRUN#_GPIO32
WAKE#
SERIRQ
THRM#
VRMPWRGD
TP12
PM_RI#
XDP_DBRESET#
PM_SYNC#
SMB_ALERT#
PCISTOP#_3
CPUSTOP#_3
PCI_3S_CLKRUN#
PCIE_WAKE#
PCI_3S_SERIRQ
THERM_SCI#
PM_PWROK
VR_PWRGD_CK505
VR_PWRGD
GPIO
GPIO1
GPIO6
GPIO7
GPIO8
LAN_PHY_PWR_CTRL_GPIO12
ENERGY_DETECT_GPIO13
GPIO17
GPIO18
GPIO20
SCLOCK_GPIO22
GPIO27
GPIO28
SATACLKREQ#_GPIO35
SLOAD_GPIO38
SDATAOUT0_GPIO39
SDATAOUT1_GPIO48
GPIO49
GPIO57_CLGPIO5
ICH_NEWCARD_OC#
RUNSCI0#_3
WAKEUP0#_3
LAN_PHY_PWR
EC_SMI
MACHINE_ID6
CLKREQ_R_SATA#
MACHINE_ID5
R4619 100K_5%
PCSPKR_ICH_3
MCH_ICH_SYNC#
MISC
SPKR
MCH_SYNC#
TP3
TP9
TP10
TP11
R4638 10K_5%
R4621 10K_5%
R4634 0402_OPEN
R4614 0402_OPEN
R4618 100K_5%
R4632 0402_OPEN
R4631 0402_OPEN
R4648 10K_5%
R4647 10K_5%
R4650 10K_5%
R4641 0402_OPEN
R4640 10K_5%
R4630 0402_OPEN
R4629 0402_OPEN
B500
PASSWORD_0805
ERASE PASSWORD
R4626 10K_5%
R4625 10K_5%
R4649 0402_OPEN
R4646 0402_OPEN
R4651 0402_OPEN
R4627 10K_5%
R4628 10K_5%
R4624 10K_5%
R4598 10K_5%
R4620 10K_5%
R4599 10K_5%
R4600 10K_5%
R4639 1K_5%
R4635 10K_5%
R4633 8.2K_5%
R4602 8.2K_5%
R4603 8.2K_5%
R4642 10K_5%
R4643 0402_OPEN
INVENTEC
TITLE
MAS10M
ICH9M-2
SIZE A3
CODE CS
DOC. NUMBER 1310A23553-0-0
REV A02
SHEET 32 OF 52
CHANGE by KOBE

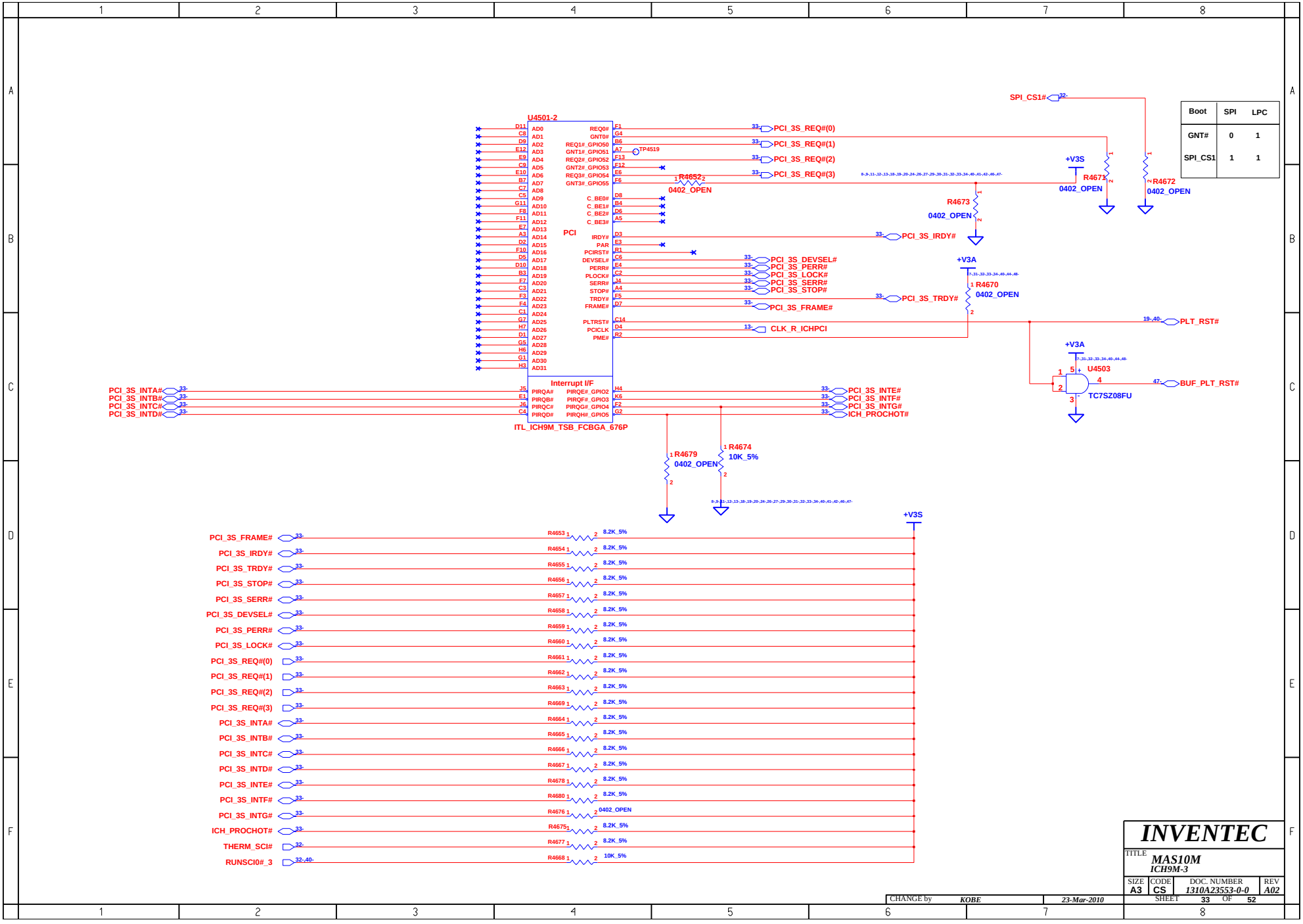

Boot	SPI	LPC
GNT#	0	1
SPI_CS1	1	1

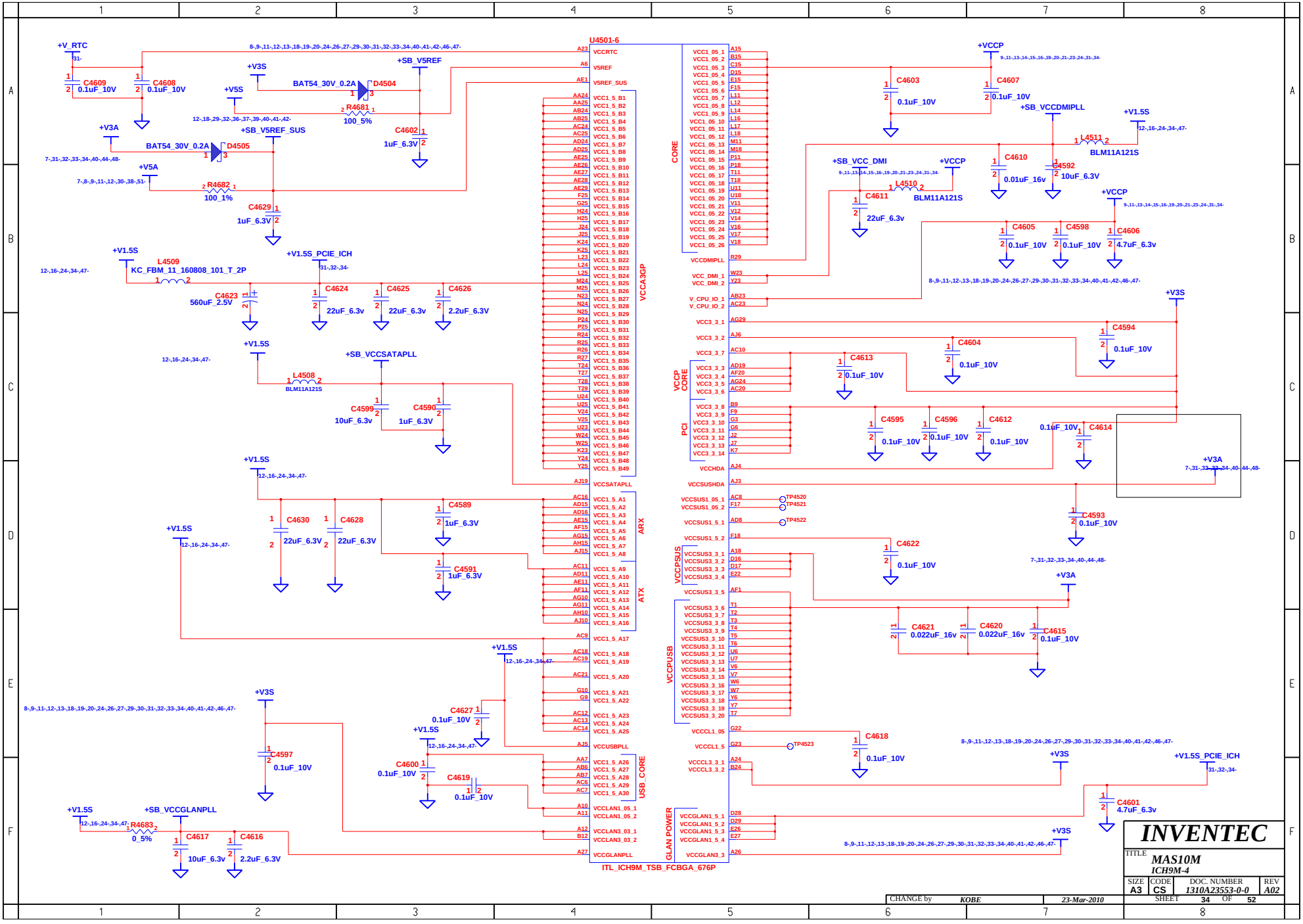
U4501-6
ITL_ICH9M_TSB_FCBGA_676P
CORE
VCCA3GP
VCCP CORE
PCI
ARX
ATX
VCCSUS
VCCPUSB
USB_CORE
GLAN POWER
+V_RTC
+V3S
+V5S
+SB_V5REF
+SB_V5REF_SUS
+V3A
+V5A
+V1.5S
+V1.5S_PCIE_ICH
+SB_VCCSATAPLL
+SB_VCCGLANPLL
+VCCP
+SB_VCCDMIPLL
+V1.5S
+SB_VCC_DMI
BAT54_30V_0.2A
D4504
D4505
R4681
100_5%
R4682
100_1%
R4683
0_5%
L4509
KC_FBM_11_160808_101_T_2P
L4508
BLM11A121S
L4510
L4511
C4609
0.1uF_10V
C4608
0.1uF_10V
C4602
1uF_6.3V
C4629
1uF_6.3V
C4623
560uF_2.5V
C4624
22uF_6.3v
C4625
22uF_6.3v
C4626
2.2uF_6.3V
C4599
10uF_6.3v
C4590
1uF_6.3V
C4630
22uF_6.3V
C4628
22uF_6.3V
C4589
1uF_6.3V
C4591
1uF_6.3V
C4597
0.1uF_10V
C4627
0.1uF_10V
C4600
0.1uF_10V
C4619
0.1uF_10V
C4617
10uF_6.3v
C4616
2.2uF_6.3V
C4603
0.1uF_10V
C4607
0.1uF_10V
C4610
0.01uF_16v
C4592
10uF_6.3V
C4611
22uF_6.3v
C4605
0.1uF_10V
C4598
0.1uF_10V
C4606
4.7uF_6.3v
C4594
0.1uF_10V
C4604
0.1uF_10V
C4613
0.1uF_10V
C4595
0.1uF_10V
C4596
0.1uF_10V
C4612
0.1uF_10V
C4614
0.1uF_10V
C4593
0.1uF_10V
C4622
0.1uF_10V
C4621
0.022uF_16v
C4620
0.022uF_16v
C4615
0.1uF_10V
C4618
0.1uF_10V
C4601
4.7uF_6.3v
TP4520
TP4521
TP4522
TP4523
INVENTEC
TITLE
MAS10M
ICH9M-4
SIZE A3
CODE CS
DOC. NUMBER 1310A23553-0-0
REV A02
SHEET 34 OF 52
CHANGE by KOBE
23-Mar-2010

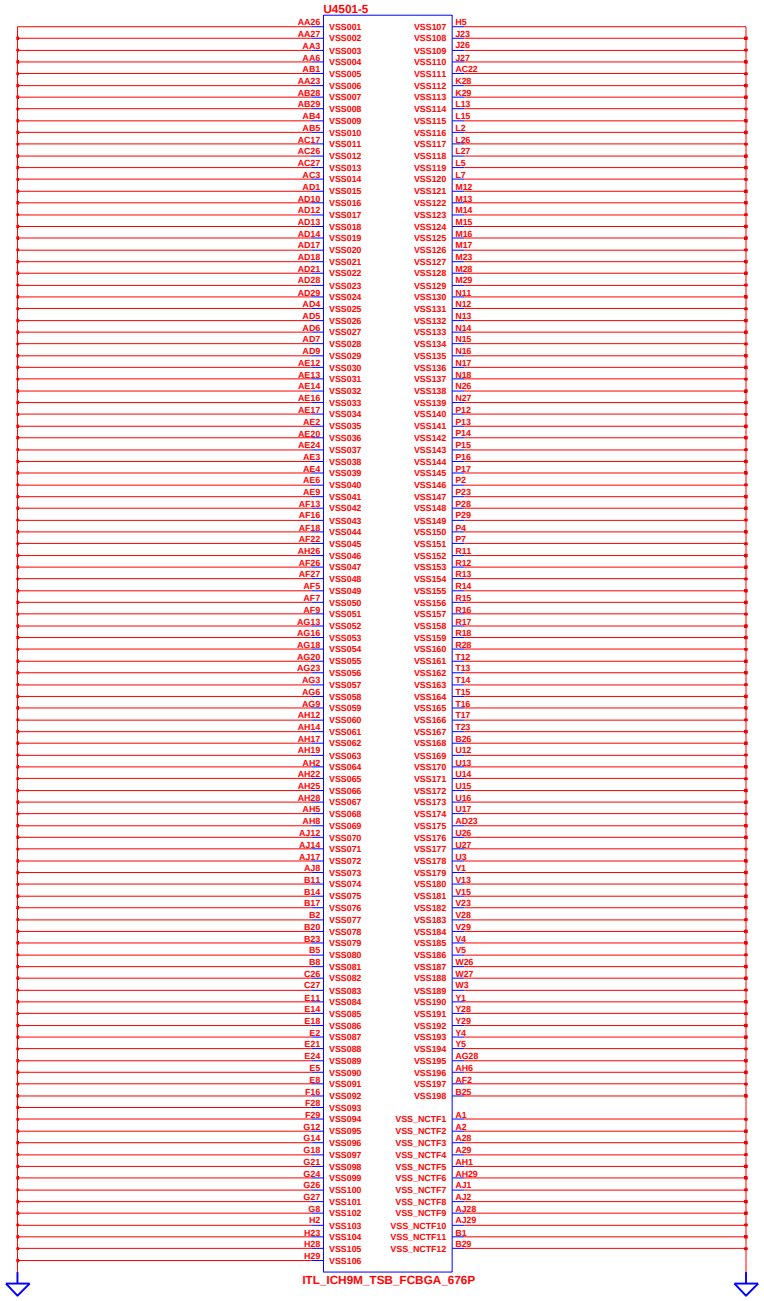

CHANGE by	KOBE	23-Mar-2010	

INVENTEC

TITLE *MAS10M*
ICH9M-5

SIZE	CODE	DOC. NUMBER	REV
A3	CS	1310A23553-0-0	A02

SHEET 35 OF 52

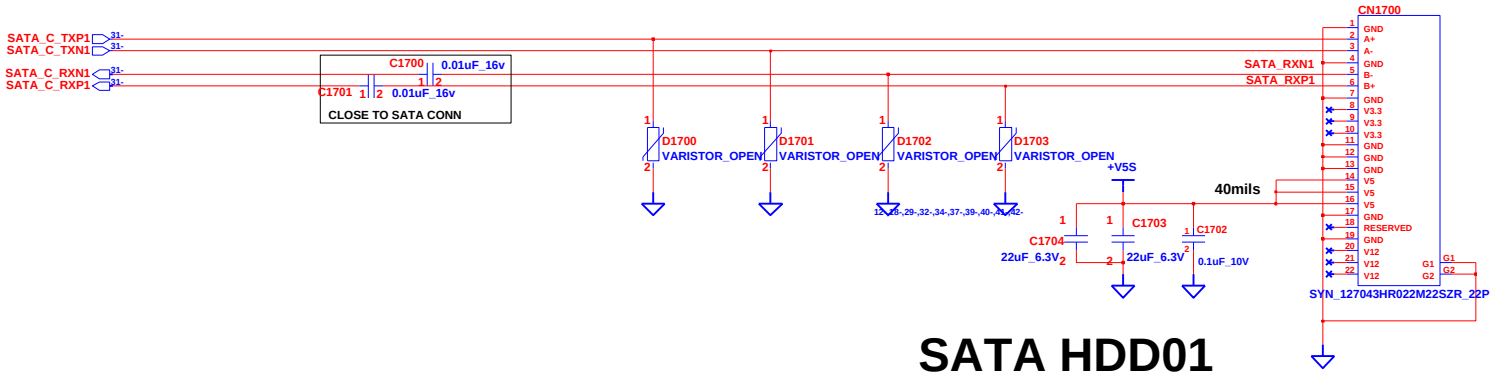

SATA HDD01

INVENTEC			
TITLE MAS10M HDD CONN			
SIZE A3	CODE CS	DOC. NUMBER 1310A23553-0-0	REV A02
CHANGE by KOBE	23-Mar-2010	SHEET 36 OF 52	

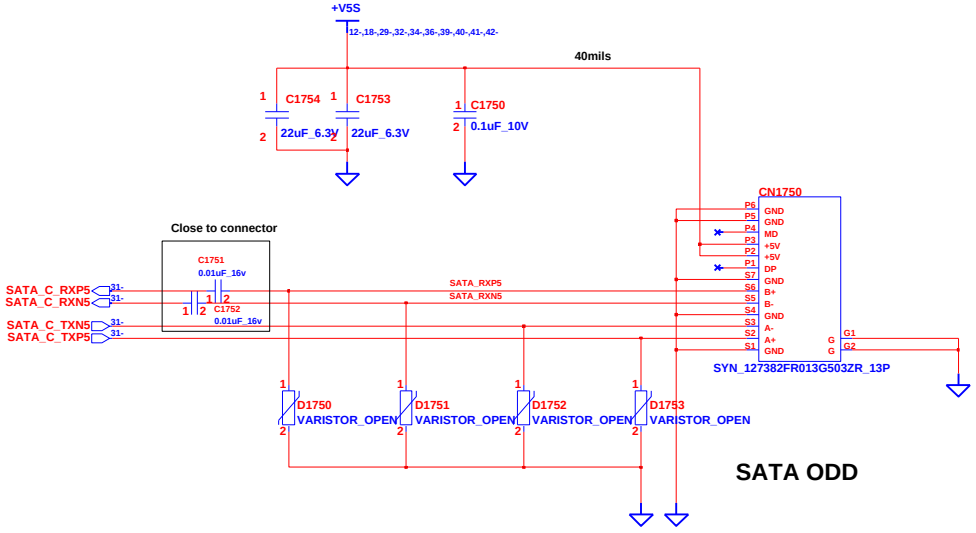

SATA ODD

INVENTEC			
TITLE MAS10M SATA ODD			
SIZE A3	CODE CS	DOC. NUMBER 1310A23553-0-0	REV A02
CHANGE by KOBE	23-Mar-2010	SHEET 37 OF 52	

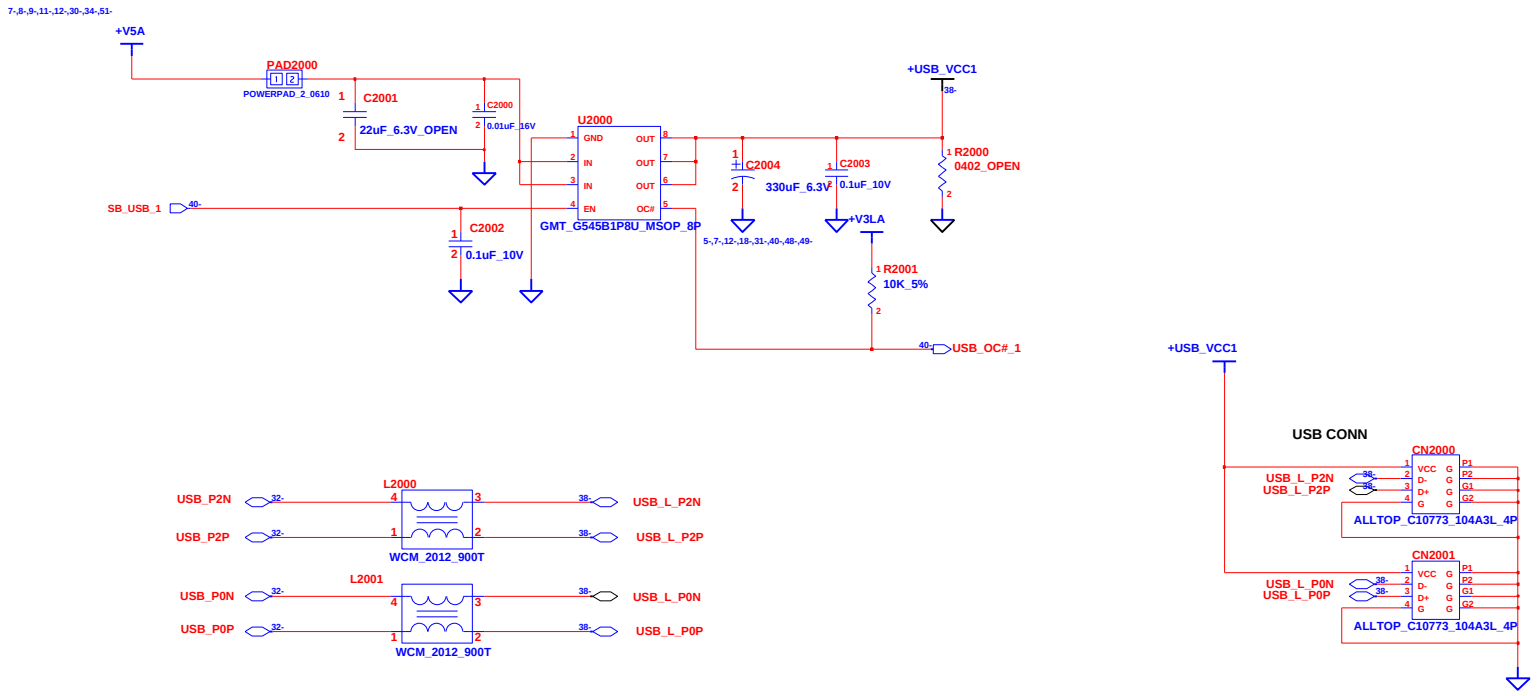

CHANGE by	KOBE	23-Mar-2010	

INVENTEC

TITLE
MAS10M
USB CONN/USB(DB)

SIZE	CODE	DOC. NUMBER	REV
A3	CS	1310A23553-0-0	A02

SHEET 38 OF 52

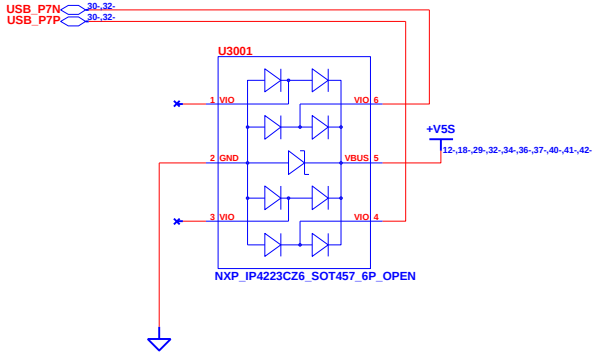

CHANGE by	KOBE	23-Mar-2010	

INVENTEC

TITLE *MAS10M*
Camera

SIZE	CODE	DOC. NUMBER	REV
A3	CS	1310A23553-0-0	A02

SHEET 39 OF 52

SMB1	SMB2	SMB3
1.Battery	1.Charge	
	2.CPU thermal sensor	

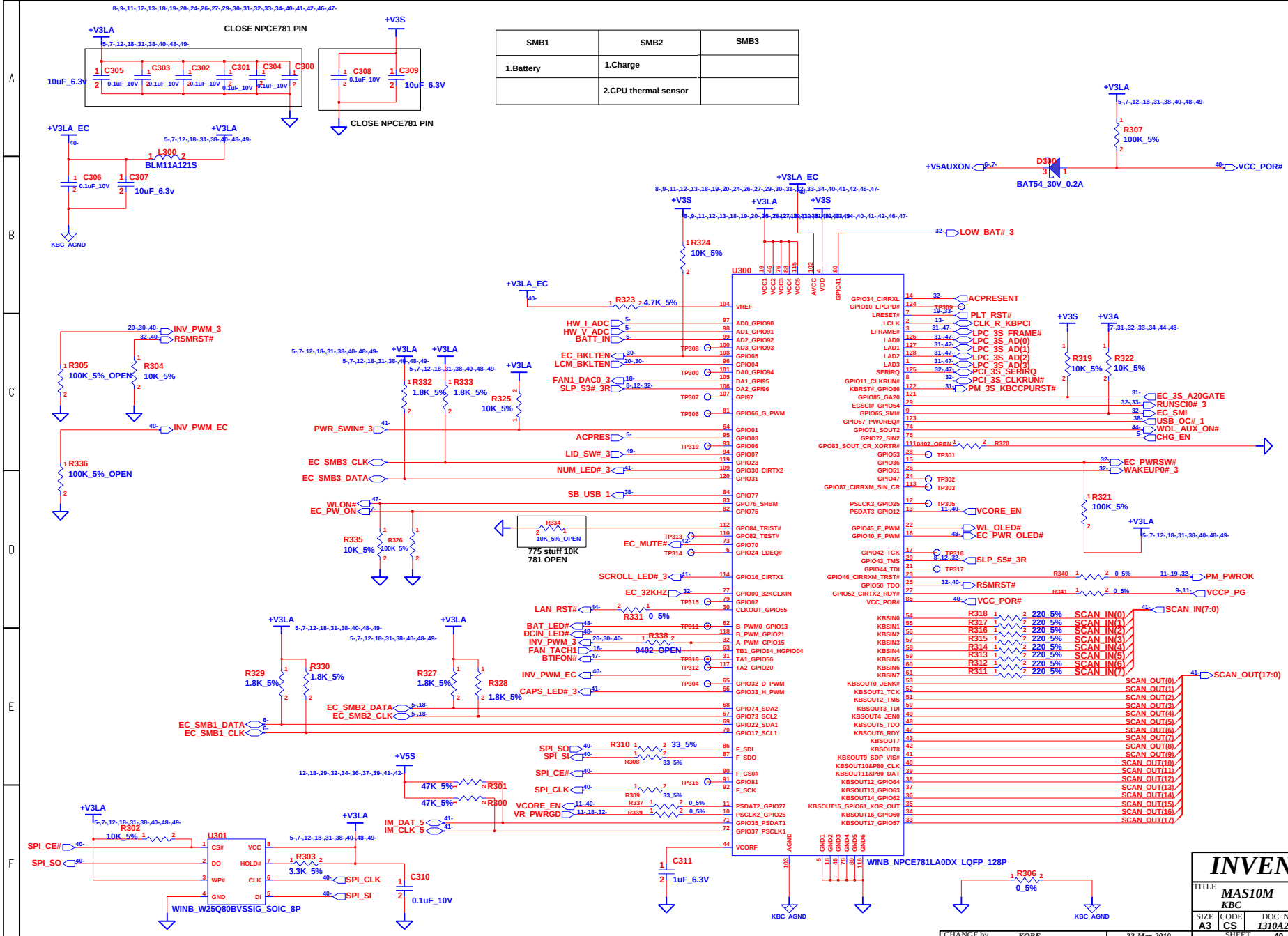

INVENTEC

TITLE MAS10M KBC

SIZE	CODE	DOC. NUMBER	REV
A3	CS	1310A23553-0-0	A02

SHEET 40 OF 52

CHANGE by KOBE 23-Mar-2010

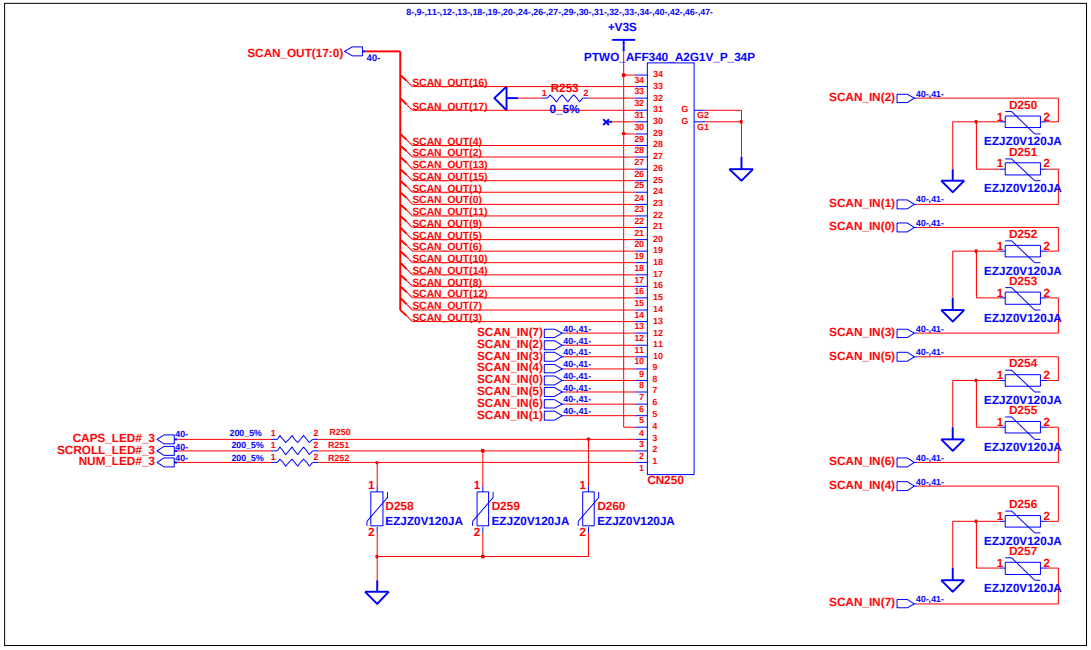

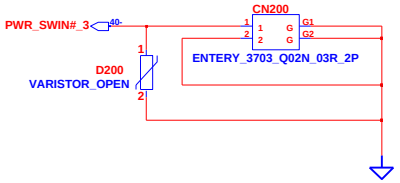

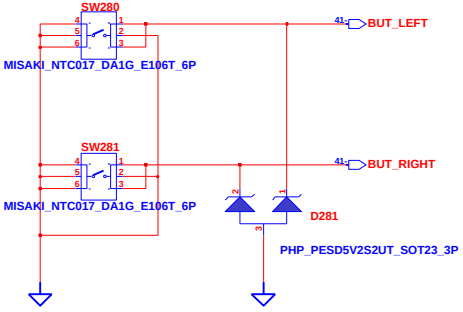

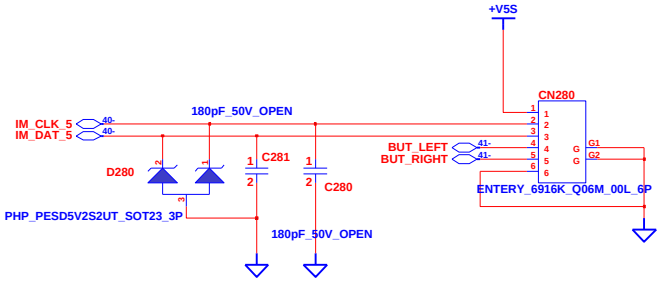

INVENTEC

TITLE
MAS10M
K/B & TP/B CONN

SIZE	CODE	DOC. NUMBER	REV
A3	CS	1310A23553-0-0	A02

SHEET 41 OF 52

CHANGE by KOBE 23-Mar-2010

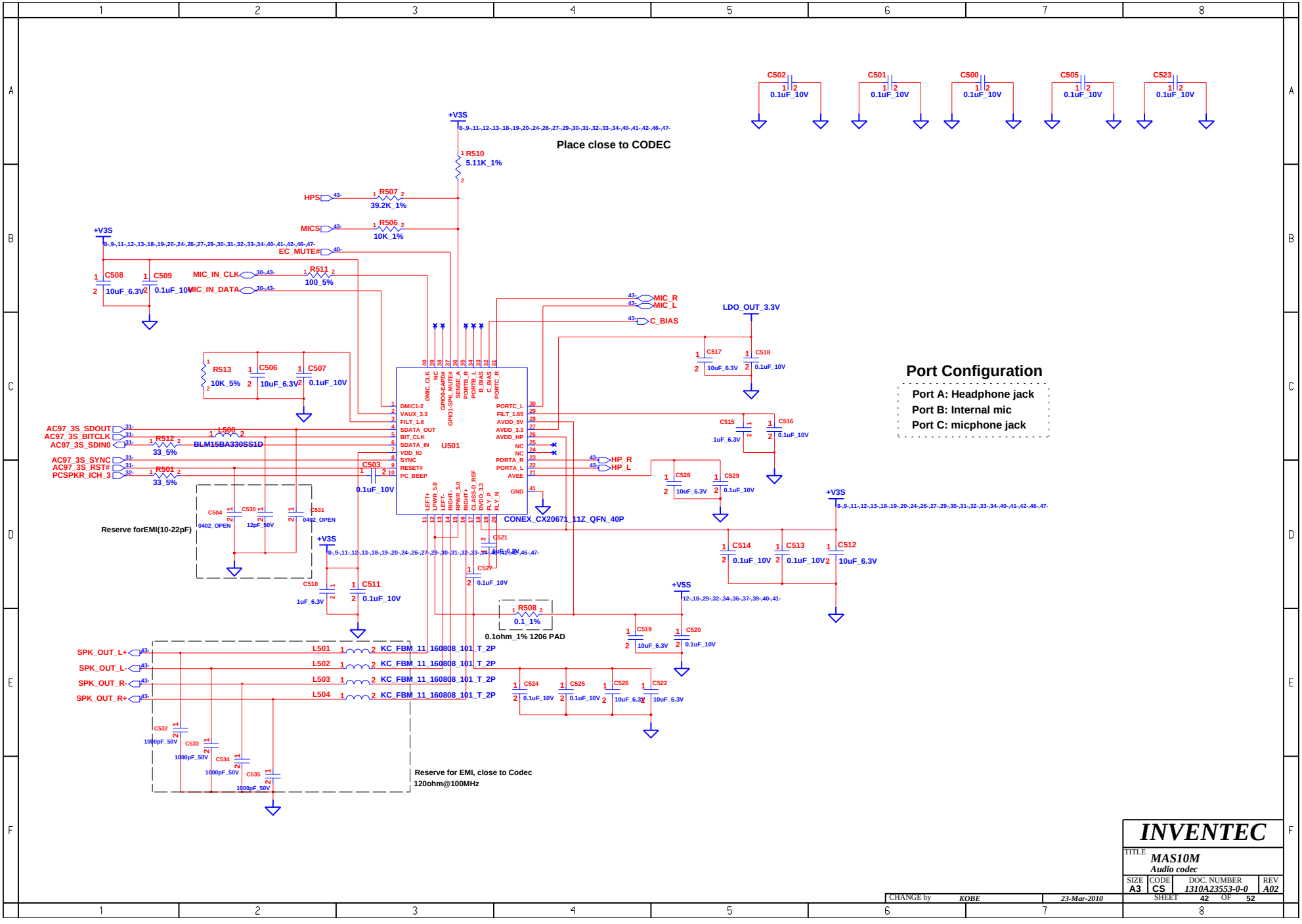
Place close to CODEC
Port Configuration
Port A: Headphone jack
Port B: Internal mic
Port C: micphone jack
U501
CONEX_CX20671_11Z_QFN_40P
Reserve forEMI(10-22pF)
0.1ohm_1% 1206 PAD
Reserve for EMI, close to Codec
120ohm@100MHz
+V3S
+V5S
LDO_OUT_3.3V
HPS
MICS
EC_MUTE#
MIC_IN_CLK
MIC_IN_DATA
MIC_R
MIC_L
C_BIAS
HP_R
HP_L
AC97_3S_SDOUT
AC97_3S_BITCLK
AC97_3S_SDIN0
AC97_3S_SYNC
AC97_3S_RST#
PCSPKR_ICH_3
SPK_OUT_L+
SPK_OUT_L-
SPK_OUT_R-
SPK_OUT_R+
R510 5.11K_1%
R507 39.2K_1%
R506 10K_1%
R511 100_5%
R513 10K_5%
R512 33_5%
R501 33_5%
R508 0.1_1%
L500 BLM15BA330SS1D
L501 KC_FBM_11_160808_101_T_2P
L502 KC_FBM_11_160808_101_T_2P
L503 KC_FBM_11_160808_101_T_2P
L504 KC_FBM_11_160808_101_T_2P
C502 0.1uF_10V
C501 0.1uF_10V
C500 0.1uF_10V
C505 0.1uF_10V
C523 0.1uF_10V
C508 10uF_6.3V
C509 0.1uF_10V
C506 10uF_6.3V
C507 0.1uF_10V
C503 0.1uF_10V
C517 10uF_6.3V
C518 0.1uF_10V
C515 1uF_6.3V
C516 0.1uF_10V
C528 10uF_6.3V
C529 0.1uF_10V
C514 0.1uF_10V
C513 0.1uF_10V
C512 10uF_6.3V
C519 10uF_6.3V
C520 0.1uF_10V
C524 0.1uF_10V
C525 0.1uF_10V
C526 10uF_6.3V
C522 10uF_6.3V
C504 0402_OPEN
C530 12pF_50V
C531 0402_OPEN
C510 1uF_6.3V
C511 0.1uF_10V
C521 10uF_6.3V
C527 0.1uF_10V
C532 1000pF_50V
C533 1000pF_50V
C534 1000pF_50V
C535 1000pF_50V
INVENTEC
TITLE MAS10M
Audio codec
SIZE A3
CODE CS
DOC. NUMBER 1310A23553-0-0
REV A02
SHEET 42 OF 52
CHANGE by KOBE
23-Mar-2010

AUDIO JACKS

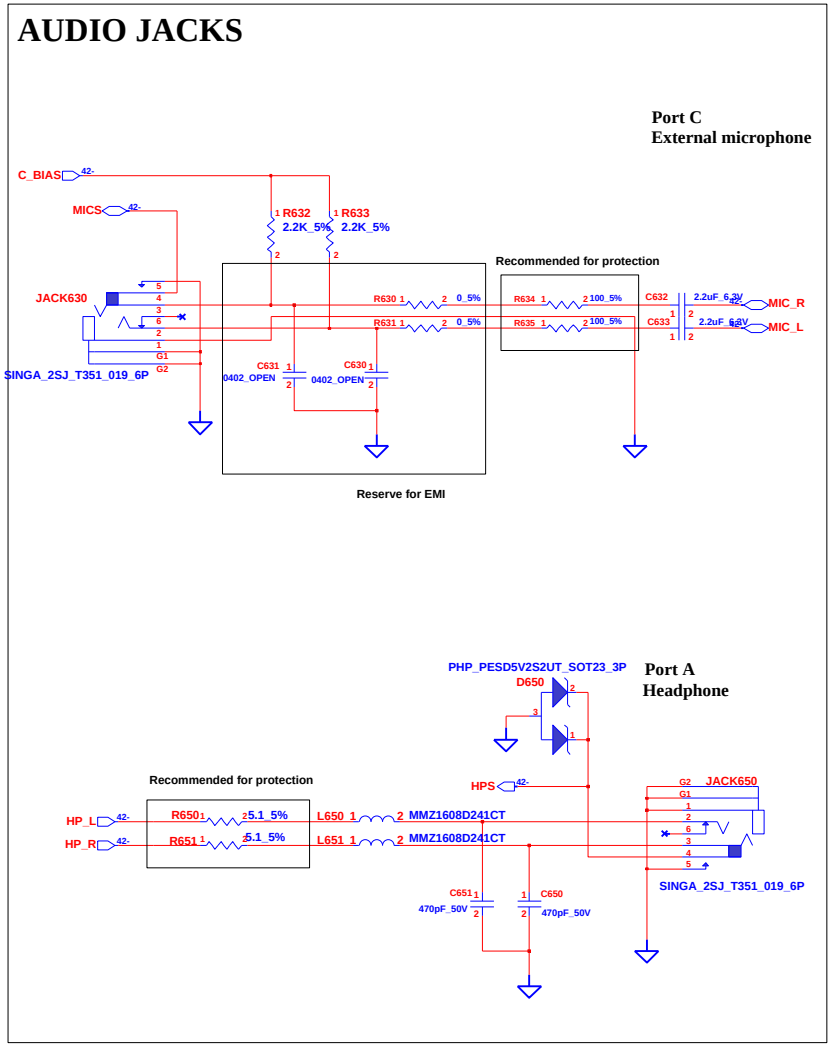

INTERNAL SPEAKERS

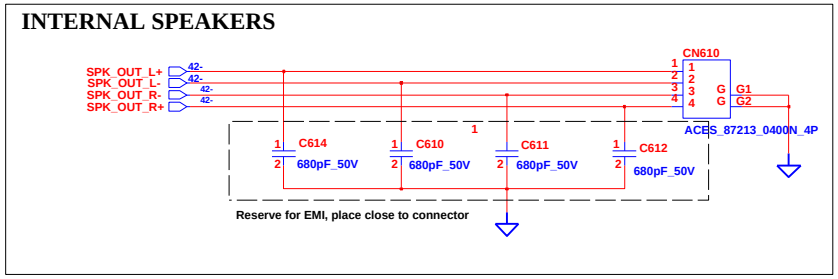

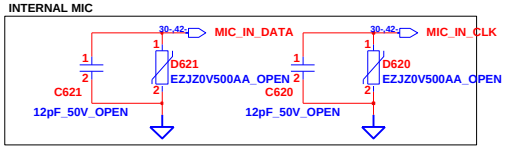

CHANGE by	KOBE	23-Mar-2010	

INVENTEC

TITLE: *MAS10M*
Audio AMP&MIC&Speaker

SIZE	CODE	DOC. NUMBER	REV
A3	CS	1310A23553-0-0	A02

SHEET 43 OF 52

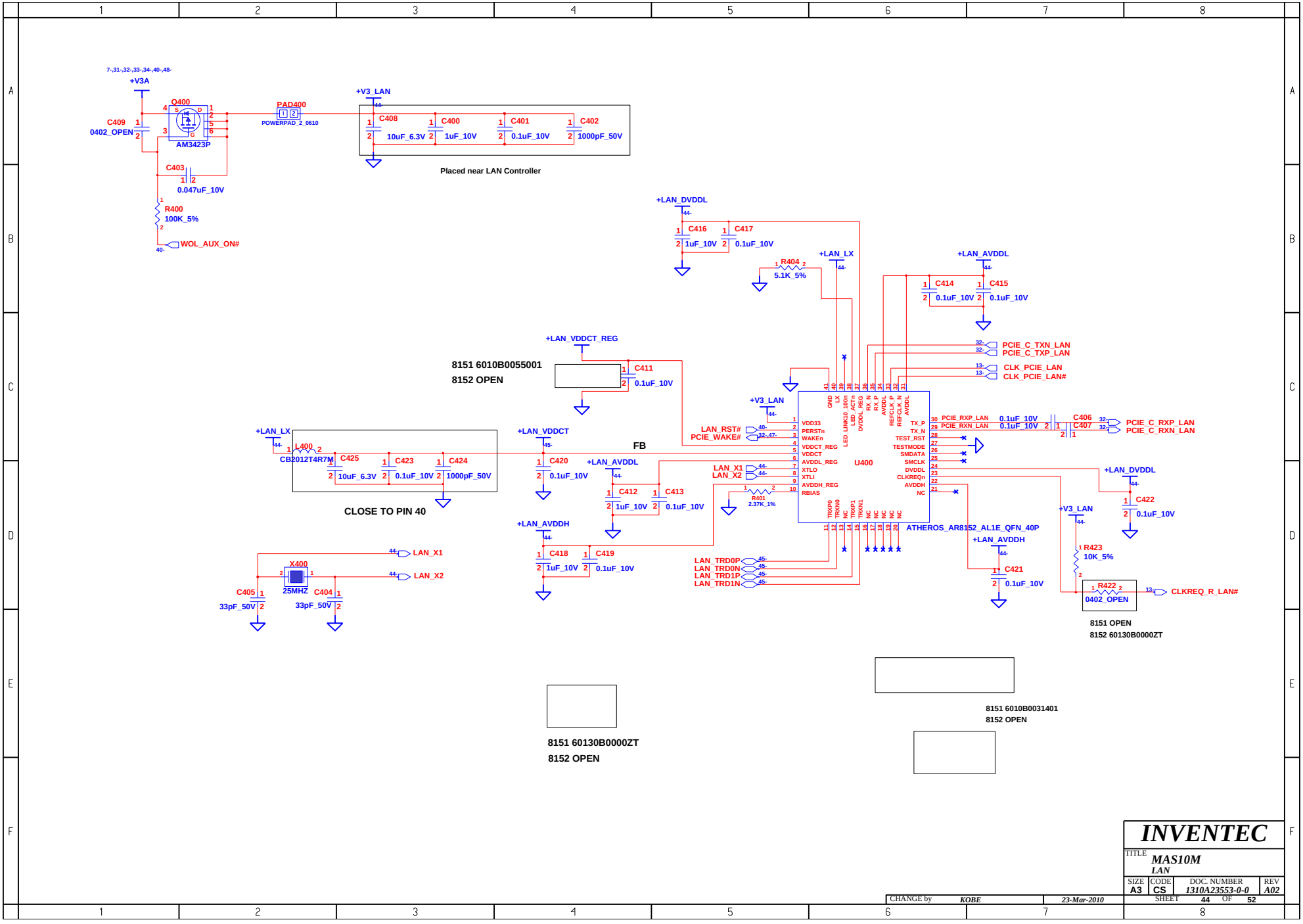

INVENTEC			
TITLE MAS10M LAN			
SIZE A3	CODE CS	DOC. NUMBER 1310A23553-0-0	REV A02
CHANGE by KOBE	23-Mar-2010	SHEET 44 OF 52	

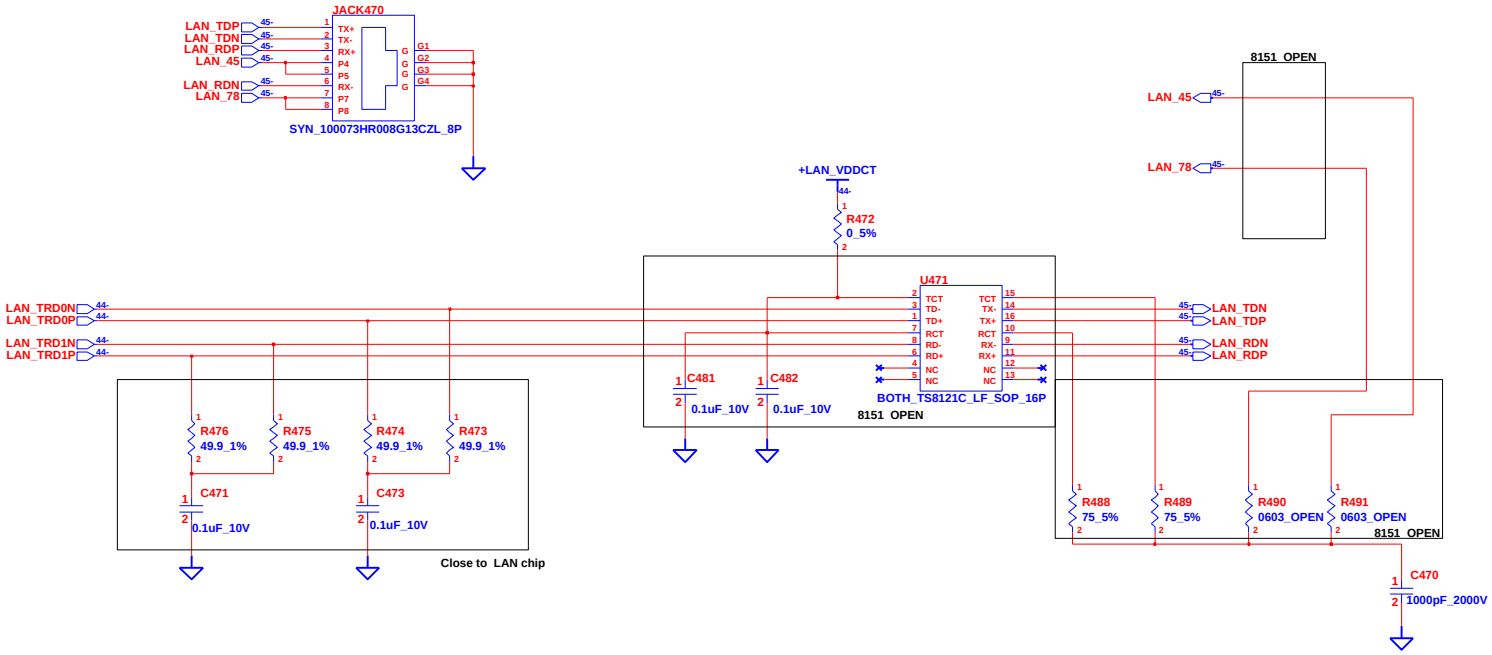

CHANGE by	KOBE	23-Mar-2010	

INVENTEC

TITLE **MAS10M**
Transformer&RJ45

SIZE	CODE	DOC. NUMBER	REV
A3	CS	1310A23553-0-0	A02

SHEET 45 OF 52

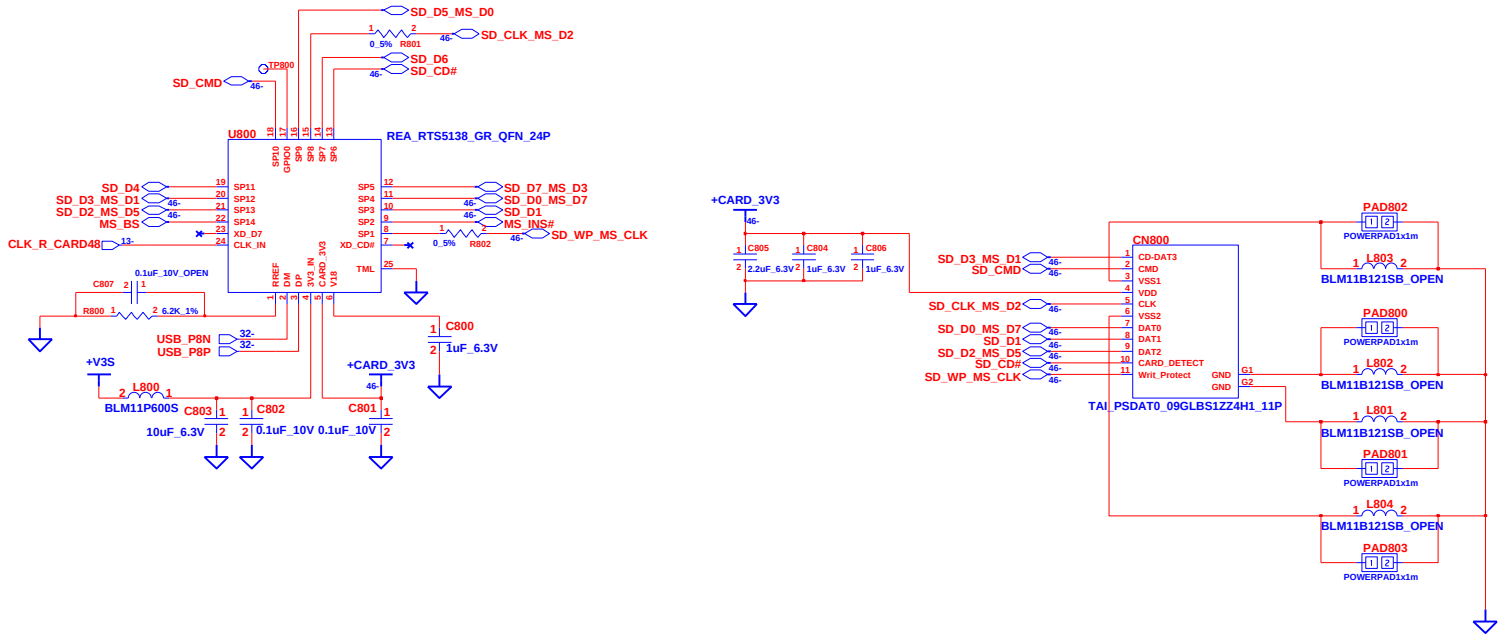

INVENTEC

TITLE
MAS10M
USB Card Reader

SIZE	CODE	DOC. NUMBER	REV
A3	CS	1310A23553-0-0	A02

SHEET 46 OF 52

CHANGE by KOBE 23-Mar-2010

Wireless & Debug card

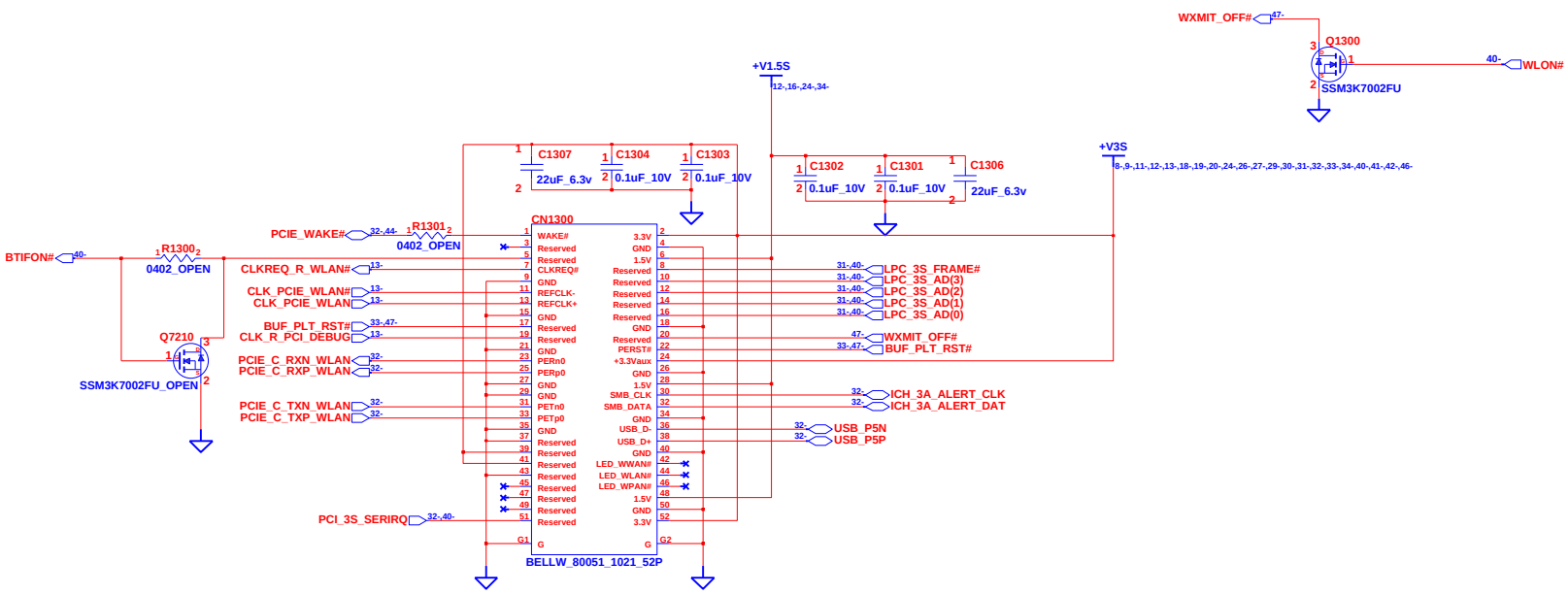

INVENTEC			
TITLE MAS10M Wireless & debug card			
SIZE A3	CODE CS	DOC. NUMBER 1310A23553-0-0	REV A02
CHANGE by KOBE	23-Mar-2010	SHEET 47 OF 52	

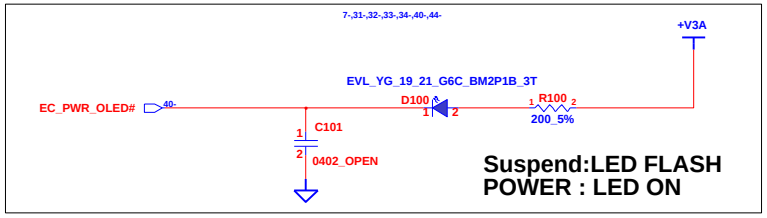

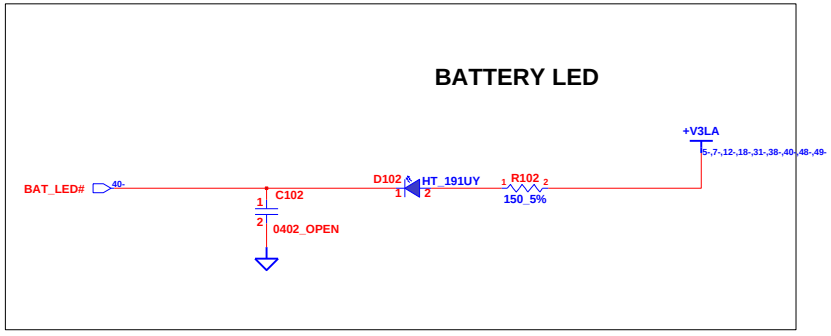

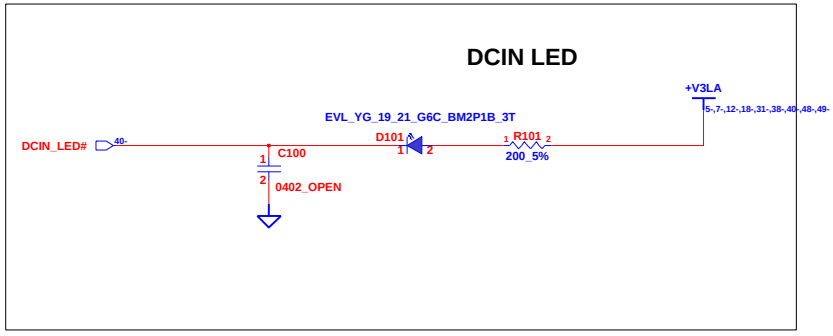

CHANGE by	KOBE	23-Mar-2010	

INVENTEC

TITLE *MAS10M*
LED & Hotkey CONN

SIZE	CODE	DOC. NUMBER	REV
A3	CS	1310A23553-0-0	A02

SHEET 48 OF 52

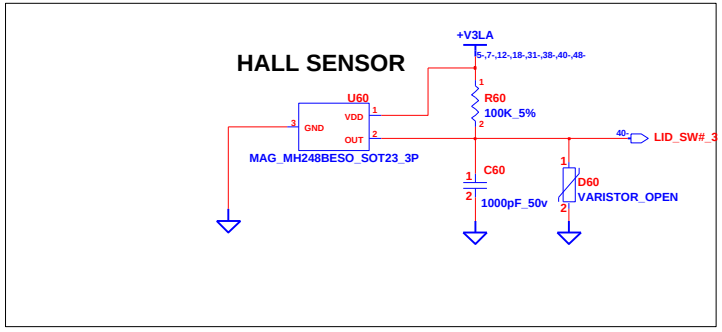

CHANGE by	KOBE	23-Mar-2010	

INVENTEC

TITLE
MAS10M
Kill Swich & Hall Sensor

SIZE	CODE	DOC. NUMBER	REV
A3	CS	*1310A23553-0-0*	*A02*

SHEET 49 OF 52

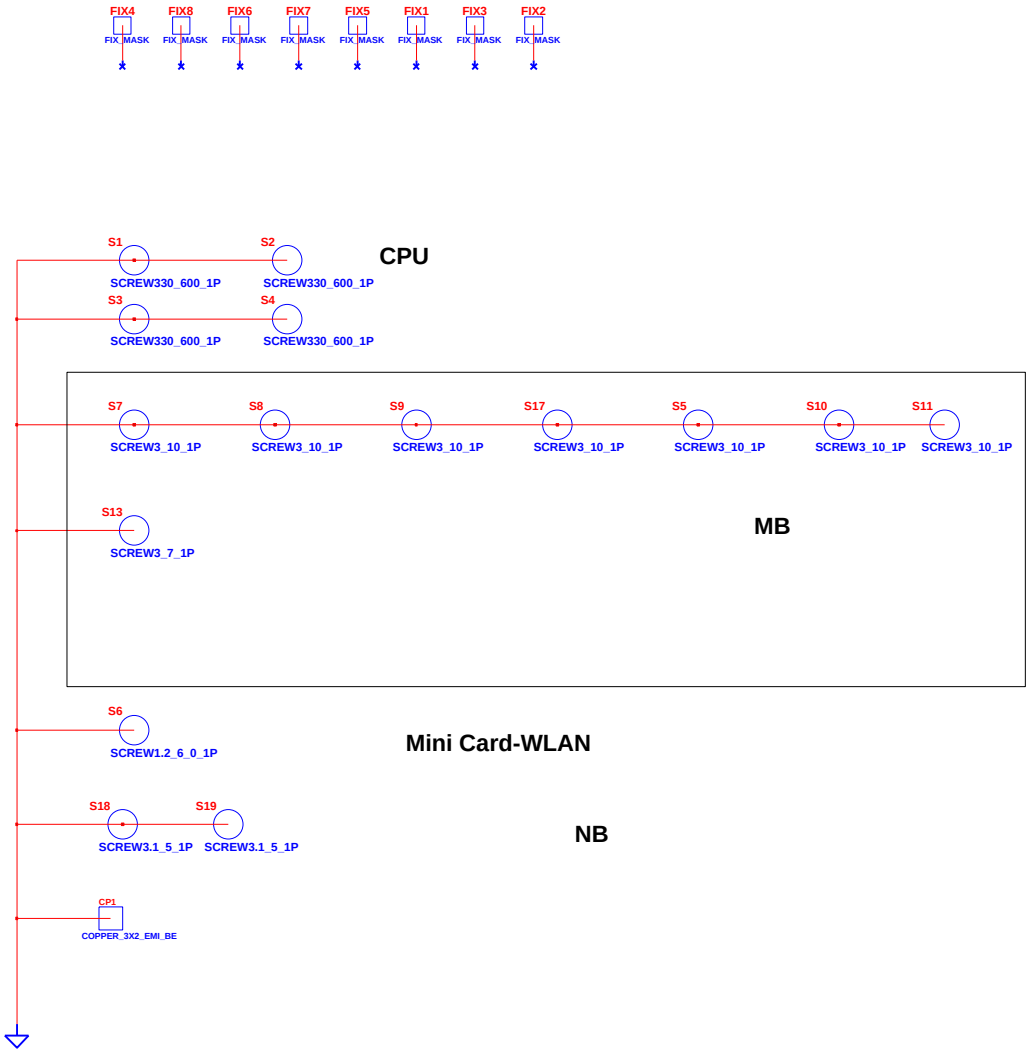

CHANGE by	KOBE	23-Mar-2010	

INVENTEC

TITLE *MAS10M*
Screw

SIZE	CODE	DOC. NUMBER	REV
A3	CS	1310A23553-0-0	A02

SHEET 50 OF 52

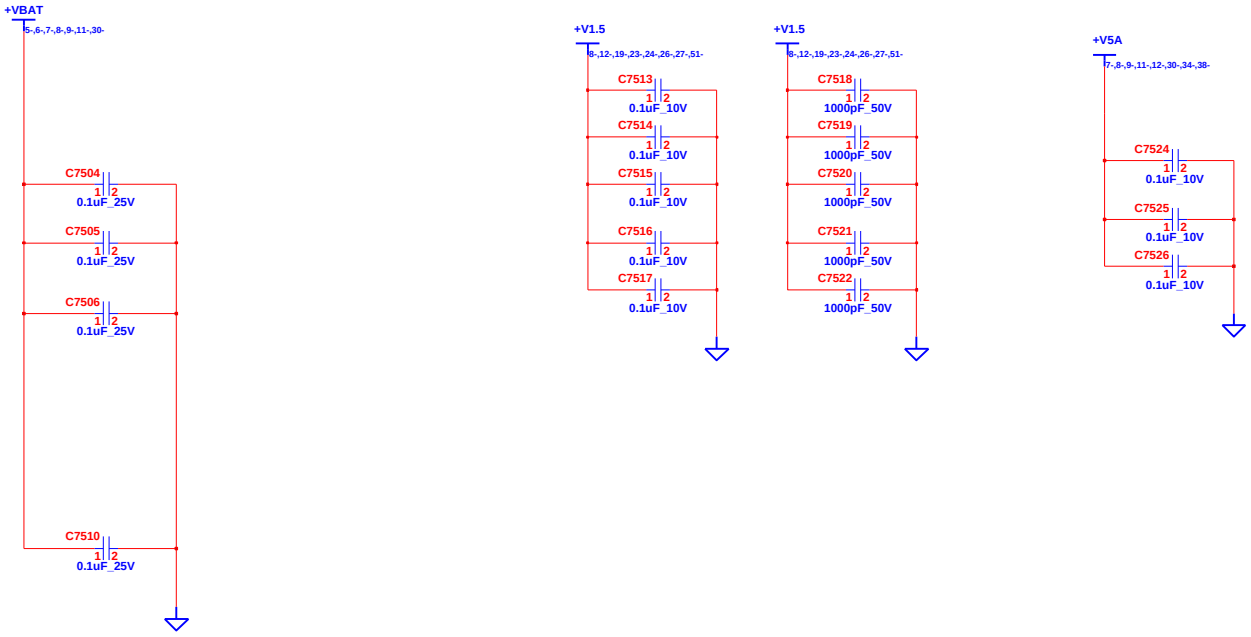

CHANGE by	KOBE	23-Mar-2010	

INVENTEC

TITLE *MAS10M*
EMI

SIZE	CODE	DOC. NUMBER	REV
A3	CS	1310A23553-0-0	A02

SHEET 51 OF 52

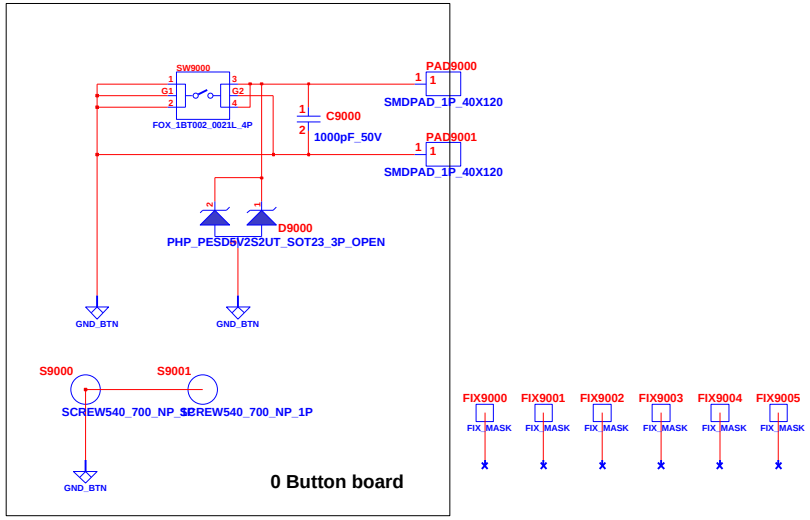

CHANGE by	KOBE	23-Mar-2010	

INVENTEC

TITLE **MAS10M**
power board

SIZE	CODE	DOC. NUMBER	REV
A3	CS	1310A23553-0-0	A02

SHEET 52 OF 52