THIS DRAWING AND SPECIFICATIONS, HEREIN, ARE THE PROPERTY OF INVENTEC CORPORATION AND SHALL NOT BE REPODUCED, COPIED, OR USED IN WHOLE OR IN PART AS THE BASIS FOR THE MANUFACTURE OR SALE OF ITEMS WITHOUT WRITTEN PERMISSION, INVENTEC CORPORATION 2009 ALL RIGHT RESERVED

HSF Property : Halogen-Free

VIDA

X BUILD (A01-001)

2012/02/17

DATE	CHANGE NO.	REV
	2011-ECO-026192	G
	2011-ECO-019745	F
	2011-ECO-019449	E
	2011-ECO-016214	D
	2011-ECO-006007	C
	2011-ECO-005952	B
	2011-ECO-0162114	A

PROPRITARY NOTE: THIS SHEET OF NGINEERING DRAWING AND SPECIFICATIONS CONTAINS CONFIDENTAL TRADE SECRET AND OTHER PROPTIETARY INFORMATION OF DELL INC. ("DELL") THIS DOCUMENT MAY NOT BE TRANSFERRED OR COPIED WITHOUT THE EXPRESS WRITTEN AUTHORIZATION OF DELL. IN ADDITION, NEITHER THIS SHEET NOR THE INFORMATION IT CONTAINS WAY BE USED BY OR DISCLOSED TO ANY THIRD PARTY WITHOUT DELL'S EXPRESS WRITTEN CONSENT.

DELL CONFIDENTIAL/PROPRIETARY

	EE	DATE	POWER	DATE
DRAWER				
DESIGN				
CHECK				
RESPONSIBLE				

SIZE = 3 VER : A02

FILE NAME :

P/N 6050A2428801

INVENTEC

TITLE VIDA

SIZE	CODE	DOC. NUMBER	REV
A3	CS	K-CS-1310A24288-0-MTB	G

SHEET 1 OF 75

www.teknisi-indonesia.com

TABLE OF CONTENTS

PAGE

1. Cover Page
2. Index
3. 12.5 UMA Block Diagram
4. Blank
5. SMB Diagram
6. Power Block Diagram
7. Power on Sequence
8. Power
9. UMA Power Charger
10. UMA Power AC IN
11. UMA Power Battery
12. UMA Power +3A/+5A
13. UMA Power +V1.5/+V0.75S
14. UMA Power VCCP/+V1.05_LAN_M
15. UMA Power +V0.85S/+V1.8S
16. UMA VGFX_CORE
17. UMA Power VCORE
18. UMA Power +V3S/+V5S/+V1.5S
19. UMA Power
20. UMA Power
21. CPU 1
22. CPU 2
23. CPU 3 DRAM
24. CPU 4 POWER
25. CPU 5 POWER
26. CPU 6 GND
27. ITP CONN
28. FAN & THERMAL
29. DDR3 DIMM0
30. DDR3 DIMM1

PAGE

31. PCH 1
32. PCH 2
33. PCH 3
34. PCH 4
35. PCH 5
36. PCH 6
37. PCH 7 POWER
38. PCH 8 POWER
39. PCH 9 GND
40. BLANK
41. SATA HDD
42. USB & ESATA
43. USB Conn
44. Blue Tooth
45. EC 5055
46. Expander ECE5048
47. AUDIO CODEC
48. MDC/Speaker/Jack
49. LAN 82579LM
50. RJ45/Transformer
51. WLAN
52. WWAN
53. FLASH PP
54. SIM CARD
55. G SENSOR
56. BCM5882
57. BCM5882
58. FP/ RFID / SM card

PAGE

59. CRT CONN
60. LCM CONN
61. HDMI
62. LED
63. EXPRESS CARD
64. CARD READER OZ600FJOLN
65. KB CONN & TP
66. Power Button / RF switch / Hall Sensor
67. E DOCKING/LAN MUX/VGA MUX
68. TCM
69. SCREW
70. EMI

DB

71. Cover Page
72. BIOS BOARD
73. HALLSENSOR BOARD
74. WLAN SW BOARD
75. SPI BOARD

INVENTEC			
TITLE VIDA INDEX			
SIZE A3	CODE CS	DOC. NUMBER K-CS-1310A24288-0-MTRG	REV
CHANGE by		2-Jan-2012	SHEET 2 OF 75

www.teknisi-indonesia.com

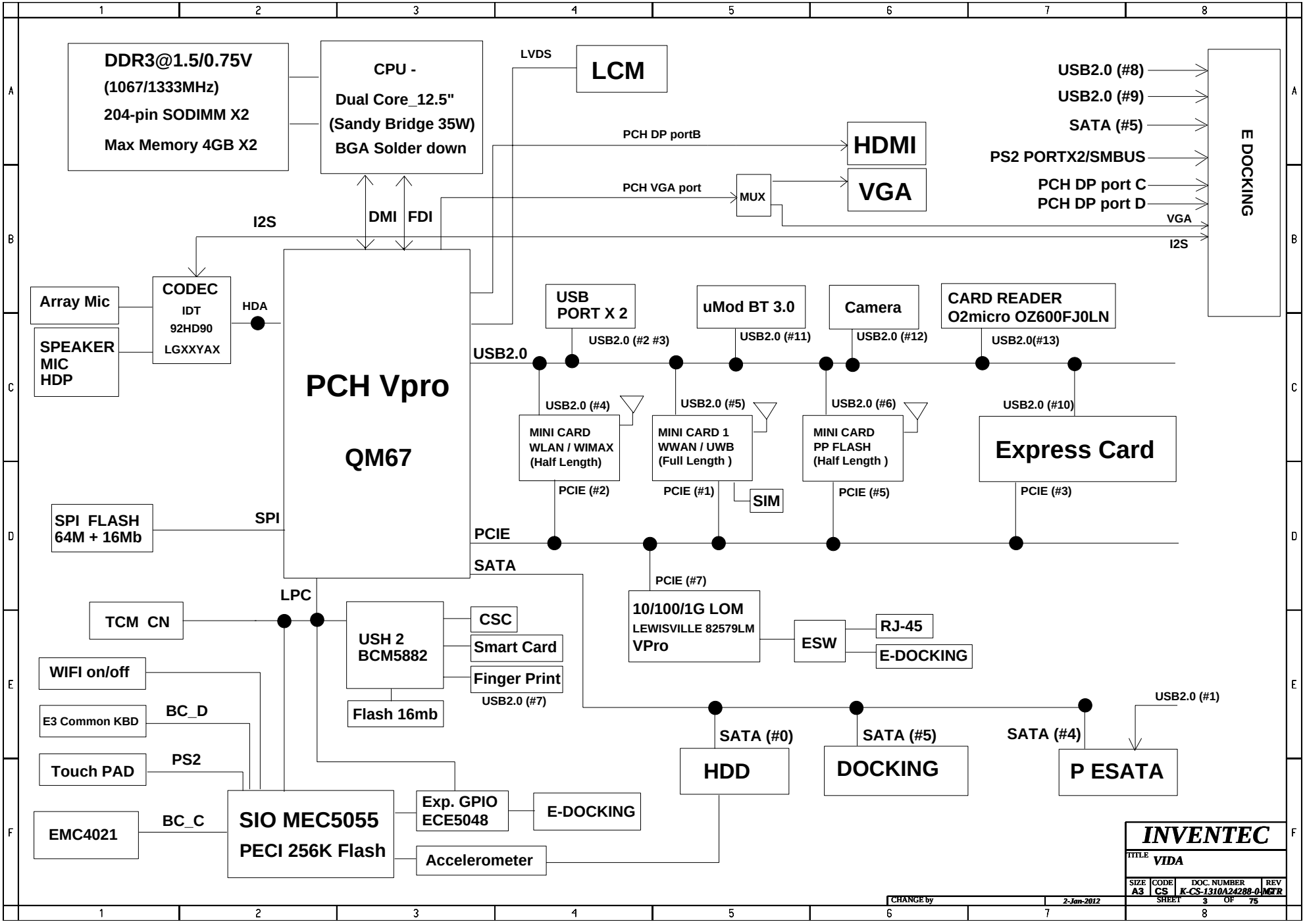

www.teknisi-indonesia.com

1	2	3	4	5	6	7	8

INVENTEC

TITLE *VIDA*

SIZE	CODE	DOC. NUMBER	REV
A3	CS	K-CS-1310A24288-0-MTR	

CHANGE by 2-Jan-2012

SHEET 4 OF 75

www.teknisi-indonesia.com

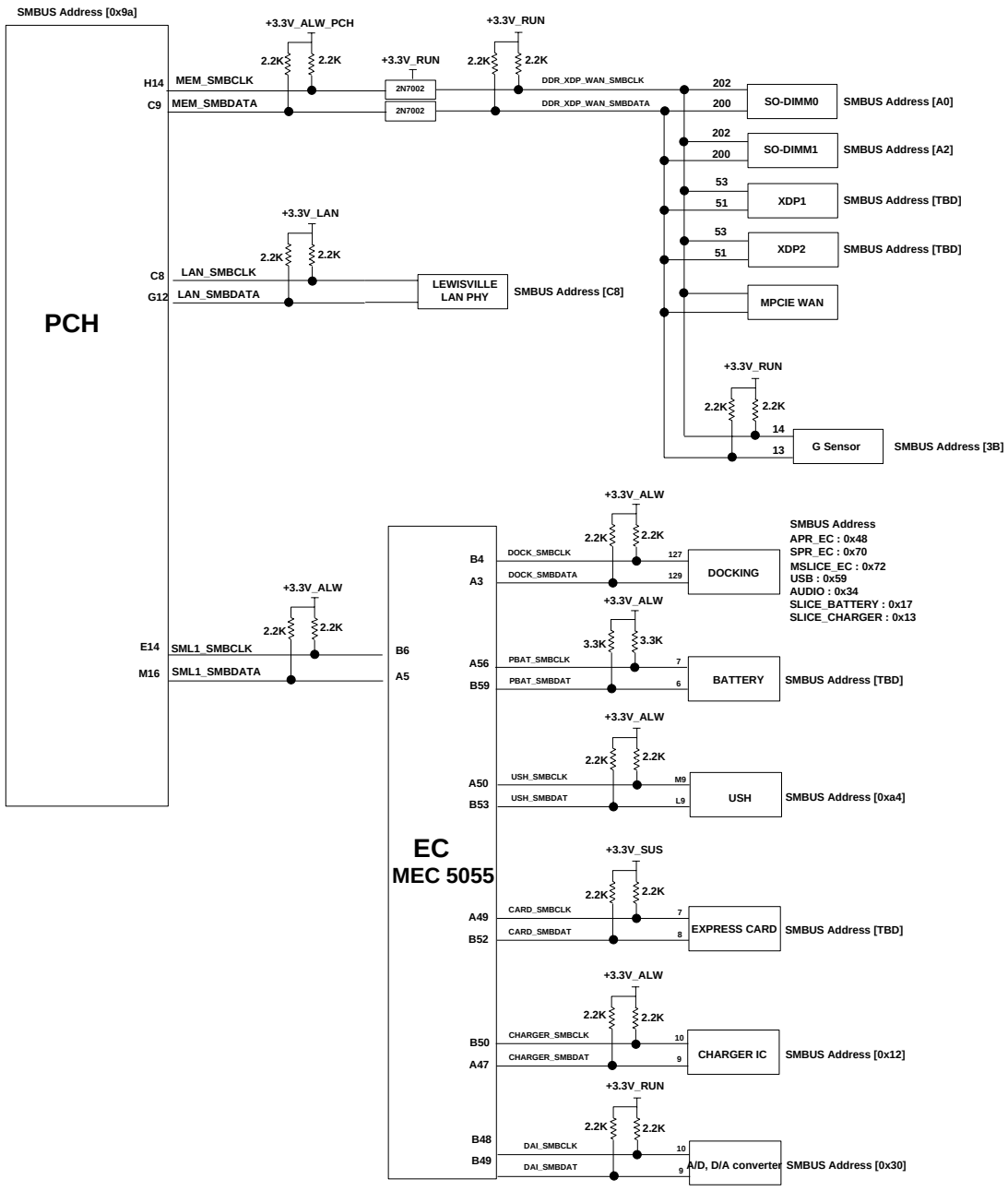

PCIE

1	3G
2	WLAN
3	EXPRESS
4	NC
5	FLASH P.P
6	MMI
7	LAN
8	NC

SATA

0	SATA HDD
1	NC
2	NC
3	NC
4	eSATA
5	E-DOCKING

USB

0	NC
1	eSATA
2	USB PORT A
3	USB PORT B
4	MINICARD WLAN
5	WWAN
6	FLASH P.P
7	FP
8	EDOCKING
9	EDOCKING
10	EXPRESSCARD
11	BLUE TOOTH
12	WEBCAM
13	NC

INVENTEC

TITLE VIDA
SMB Diagram

SIZE	CODE	DOC. NUMBER	REV
A3	CS	K-CS-1310A24288-0-MTR	

CHANGE by 2-Jan-2012 SHEET 5 OF 75

www.teknisi-indonesia.com

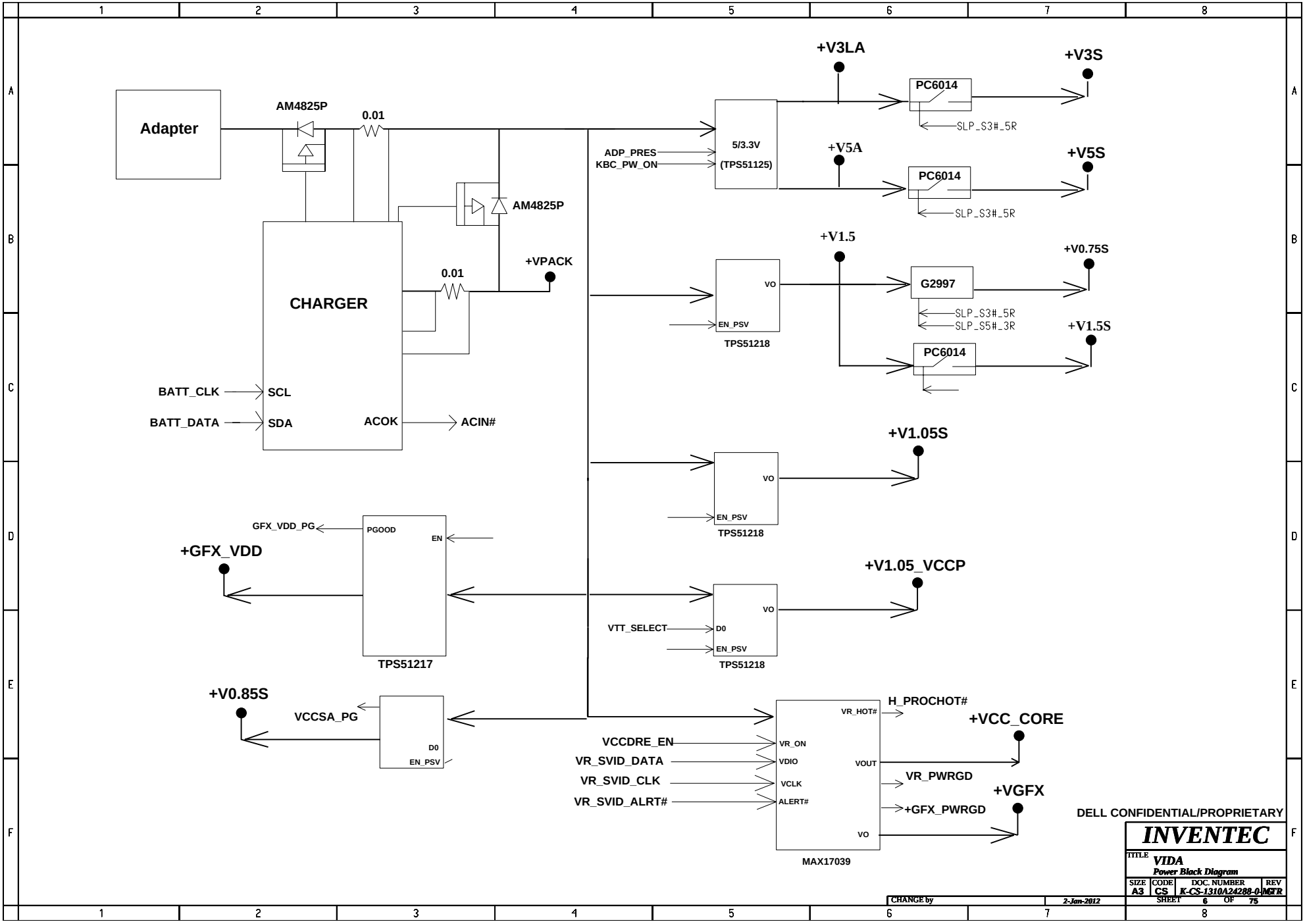

www.teknisi-indonesia.com

VIDA PWRON SEQUENCE

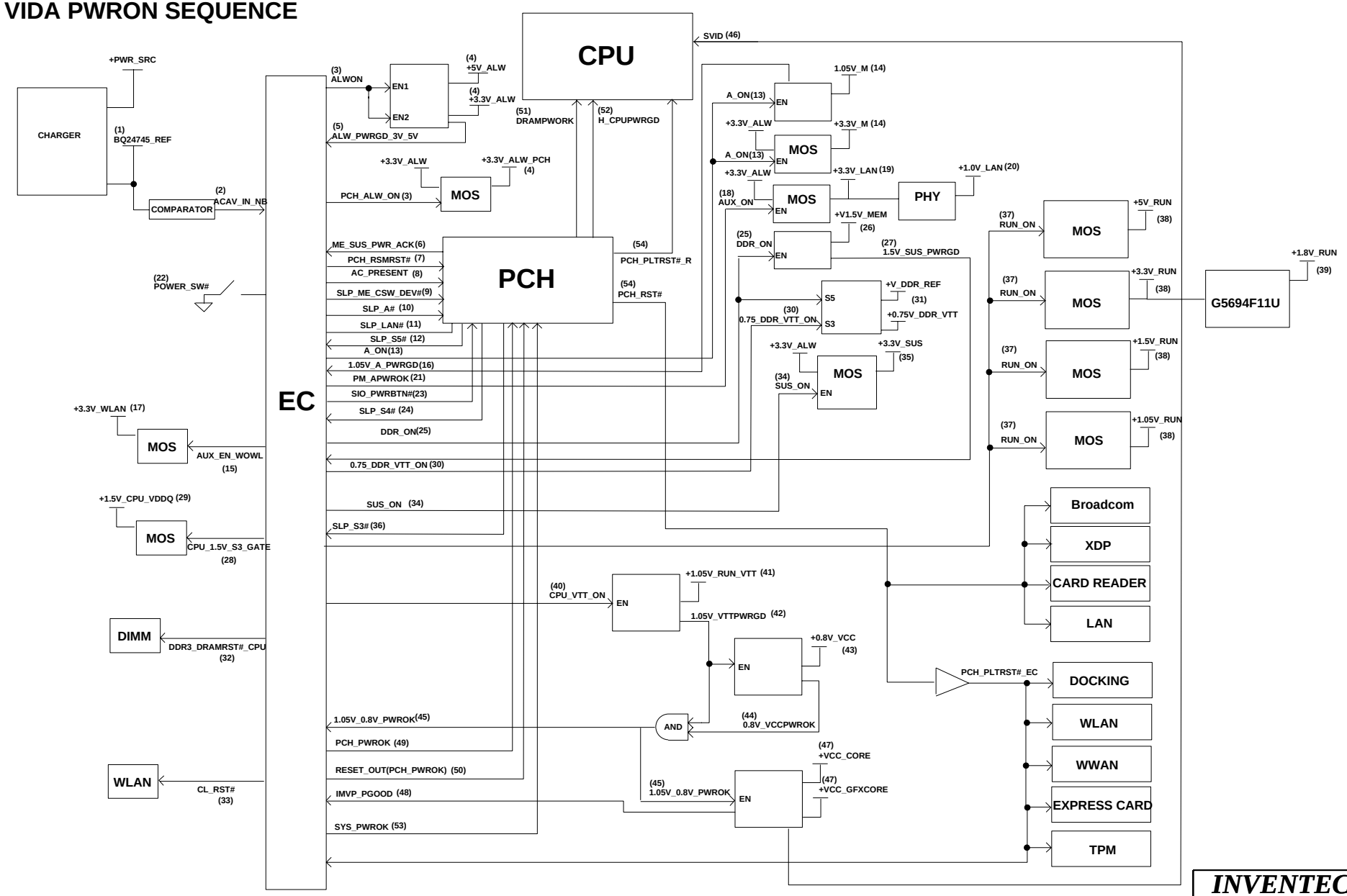

PROPRITARY NOTE: THIS SHEET OF NGINEERING DRAWING AND SPECIFICATIONS CONTAINS CONFIDENTAL TRADE SECRET AND OTHER PROPTIETARY INFORMATION OF DELL INC. ("DELL") THIS DOCUMENT MAY NOT BE TRANSFERRED OR COPIED WITHOUT THE EXPRESS WRITTEN AUTHORIZATION OF DELL. IN ADDITION, NEITHER THIS SHEET NOR THE INFORMATION IT CONTAINS WAY BE USED BY OR DISCLOSED TO ANY THIRD PARTY WITHOUT DELL'S EXPRESS WRITTEN CONSENT.

DELL CONFIDENTIAL/PROPRIETARY

INVENTEC

TITLE VIDA
Power On Sequence

SIZE	CODE	DOC. NUMBER	REV
A3	CS	K-CS-1310A24288-0-MTR	

CHANGE by 2-Jan-2012 SHEET 7 OF 75

www.teknisi-indonesia.com

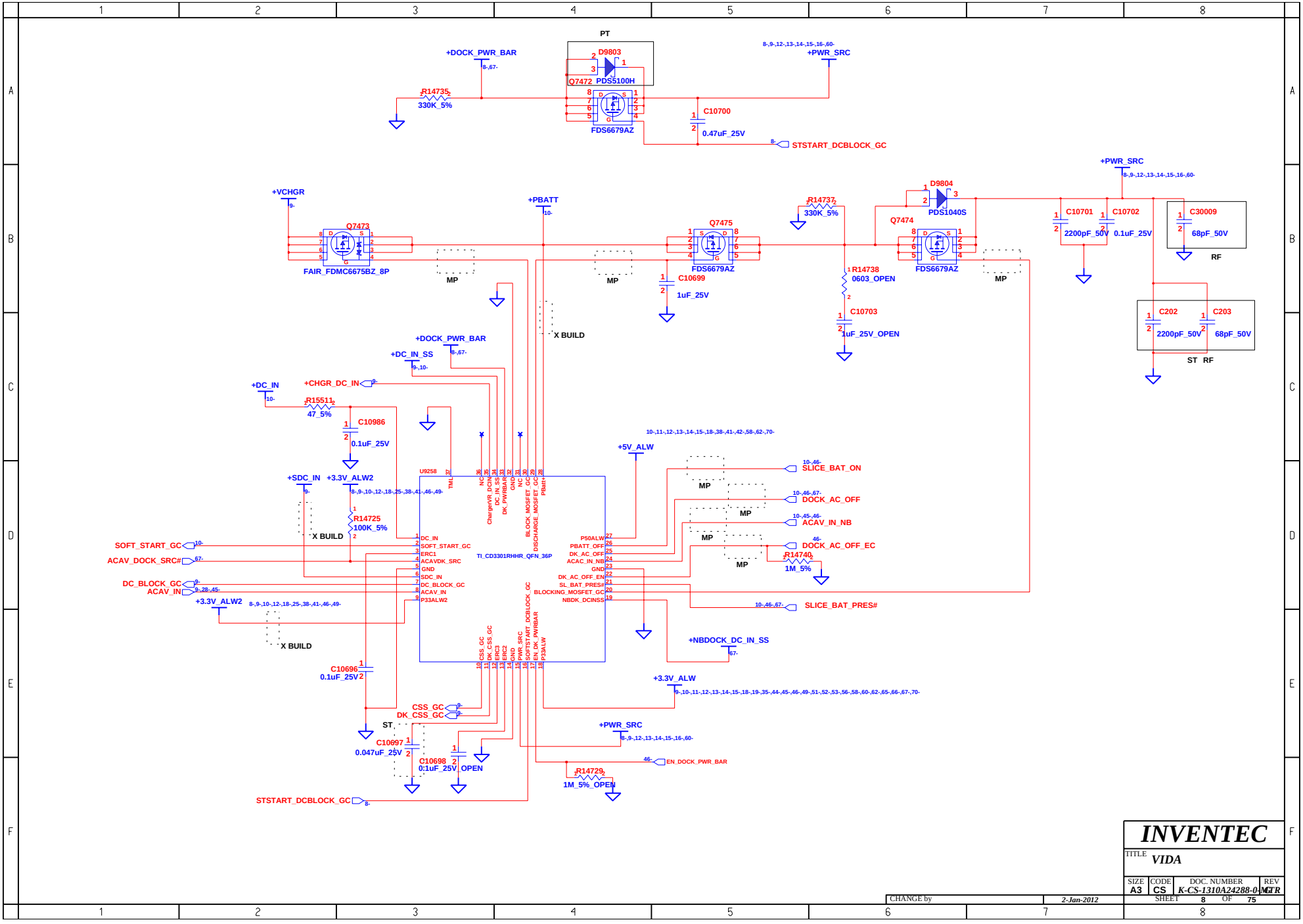

INVENTEC			
TITLE VIDA			
SIZE A3	CODE CS	DOC. NUMBER K-CS-1310A24288-0-MTR	REV
CHANGE by	2-Jan-2012	SHEET 8 OF 75	

www.teknisi-indonesia.com

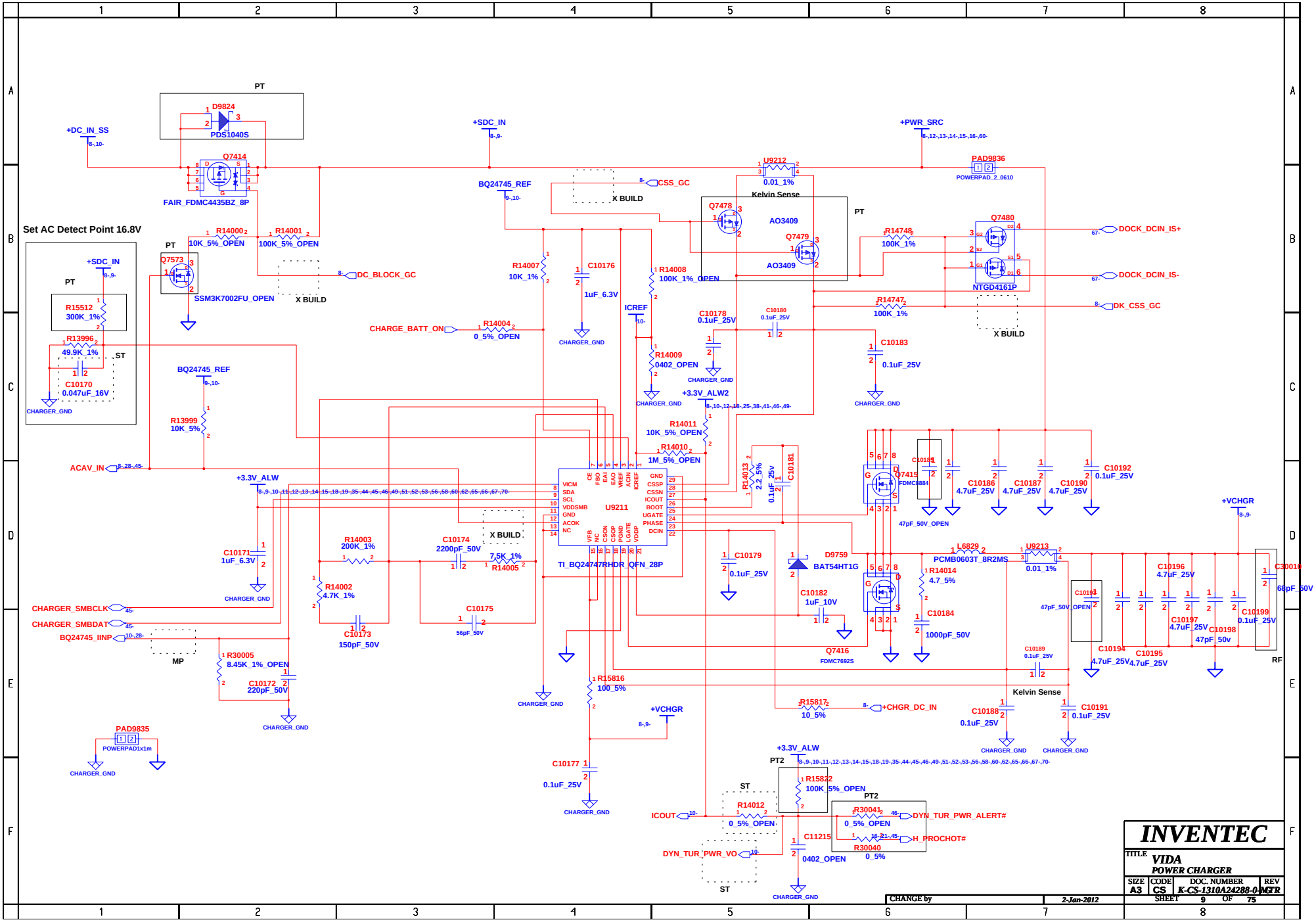

www.teknisi-indonesia.com

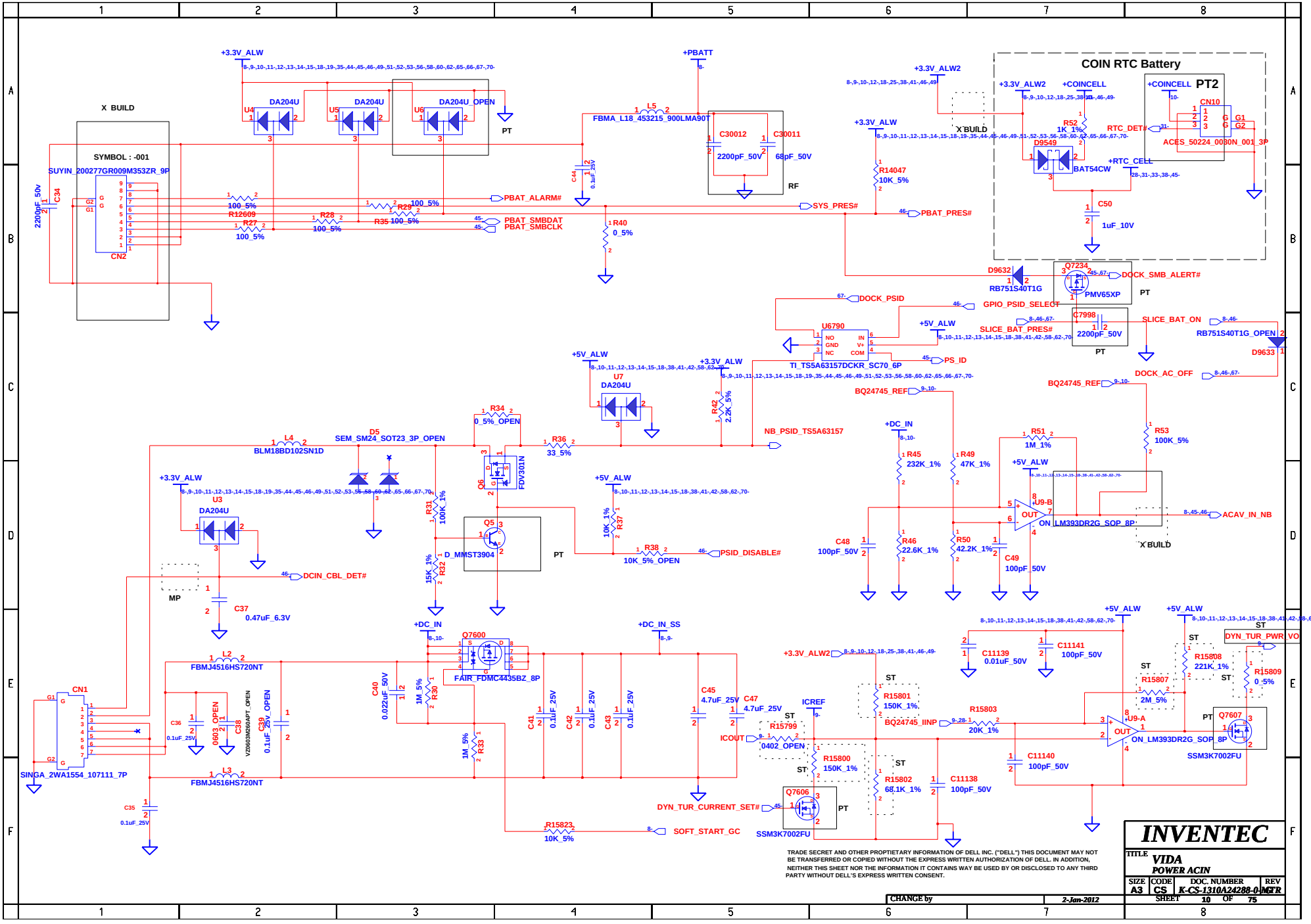

TRADE SECRET AND OTHER PROPTIETARY INFORMATION OF DELL INC. ("DELL") THIS DOCUMENT MAY NOT BE TRANSFERRED OR COPIED WITHOUT THE EXPRESS WRITTEN AUTHORIZATION OF DELL. IN ADDITION, NEITHER THIS SHEET NOR THE INFORMATION IT CONTAINS WAY BE USED BY OR DISCLOSED TO ANY THIRD PARTY WITHOUT DELL'S EXPRESS WRITTEN CONSENT.

INVENTEC

TITLE VIDA
POWER ACIN

SIZE	CODE	DOC. NUMBER	REV
A3	CS	K-CS-1310A24288-0-MTR	

CHANGE by | 2-Jan-2012 | SHEET 10 OF 75

www.teknisi-indonesia.com

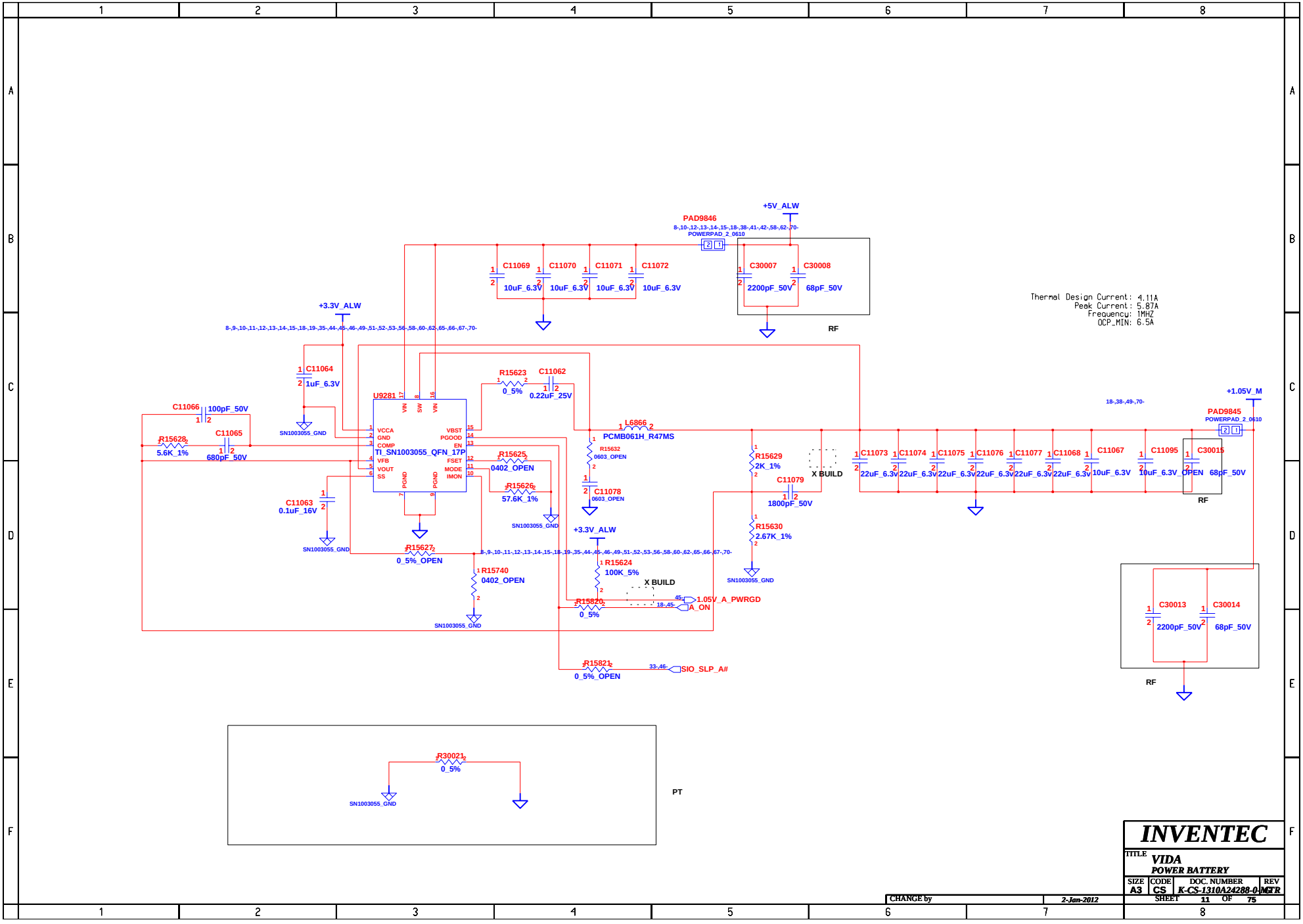

INVENTEC			
TITLE VIDA POWER BATTERY			
SIZE A3	CODE CS	DOC. NUMBER K-CS-1310A24288-0-MTR	REV
CHANGE by		2-Jan-2012	SHEET 11 OF 75

www.teknisi-indonesia.com

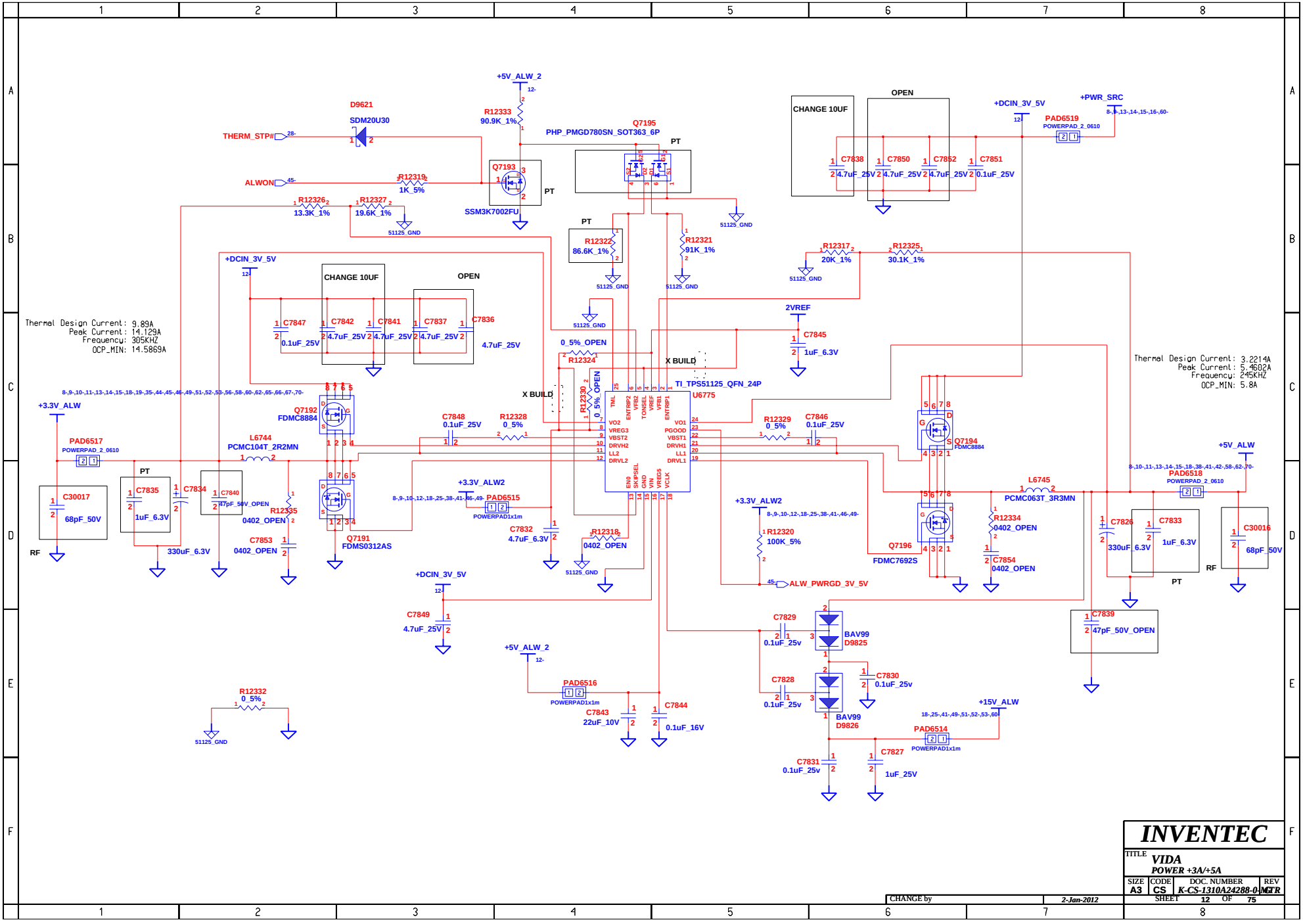

INVENTEC

TITLE VIDA
POWER +3A/+5A

SIZE	CODE	DOC. NUMBER	REV
A3	CS	K-CS-1310A24288-0	MTR

SHEET 12 OF 75

CHANGE by 2-Jan-2012

www.teknisi-indonesia.com

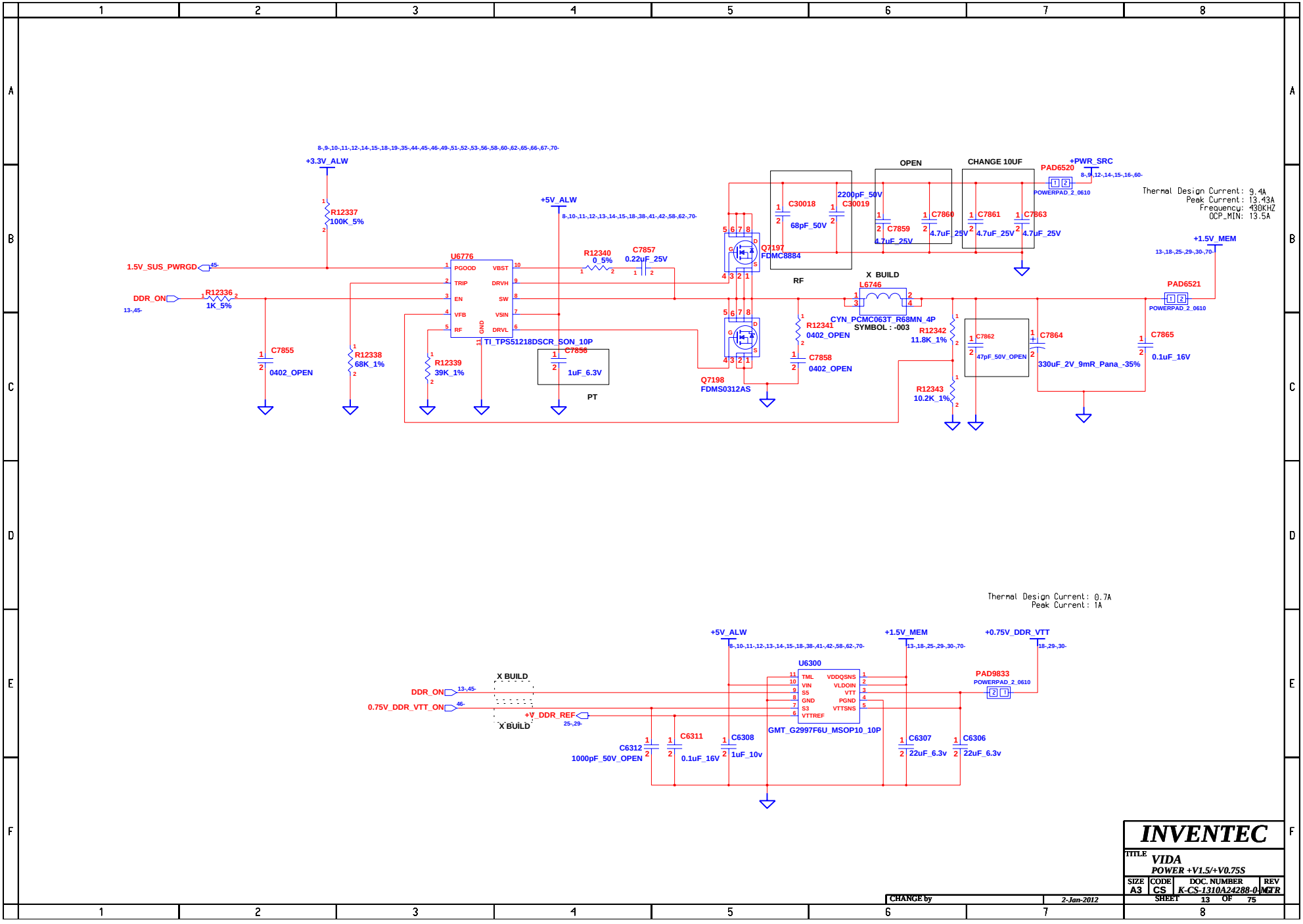

www.teknisi-indonesia.com

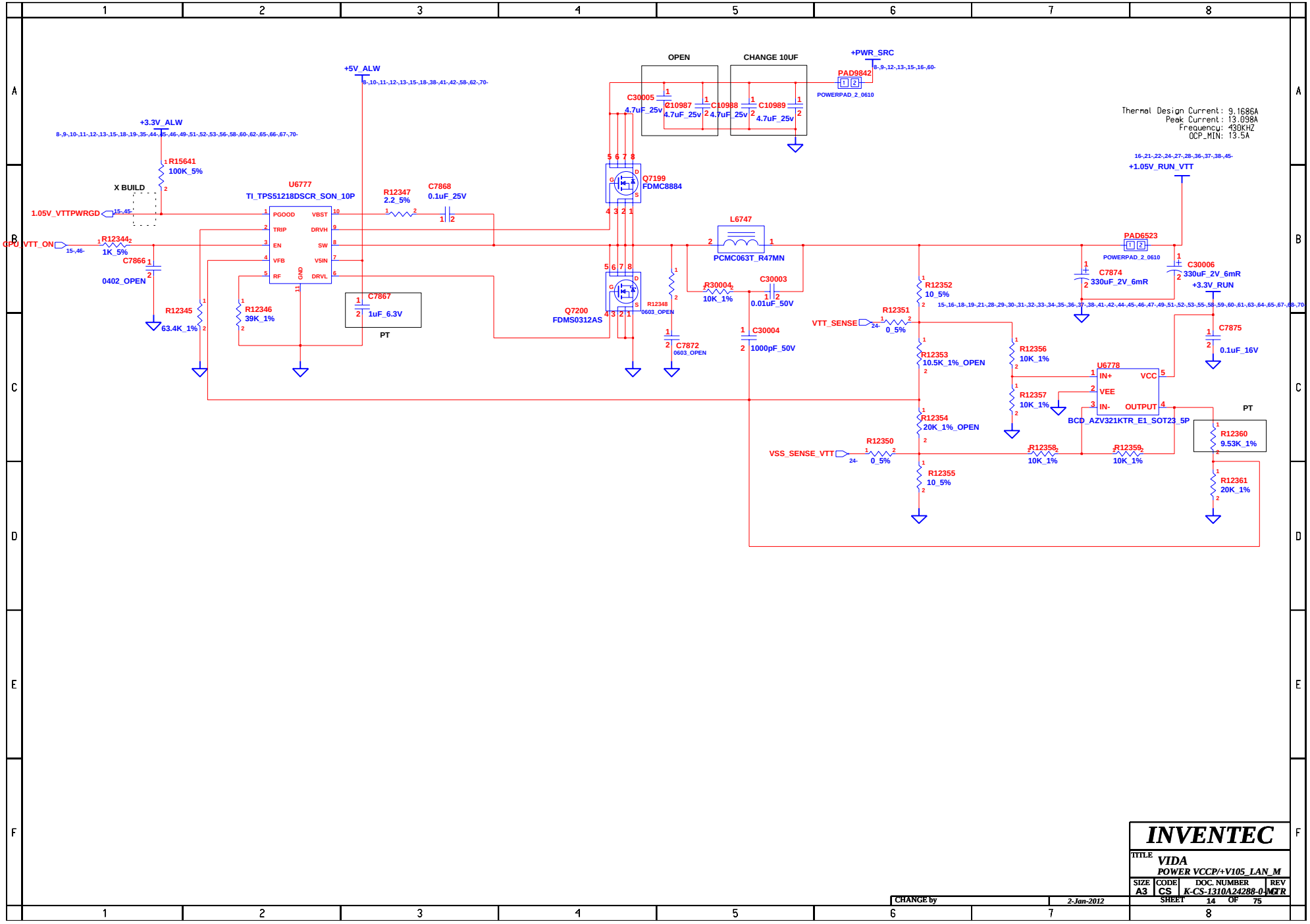

INVENTEC			
TITLE	VIDA POWER VCCP/+V105_LAN_M		
SIZE A3	CODE CS	DOC. NUMBER K-CS-1310A24288-0-MTR	REV
CHANGE by		2-Jan-2012	SHEET 14 OF 75

www.teknisi-indonesia.com

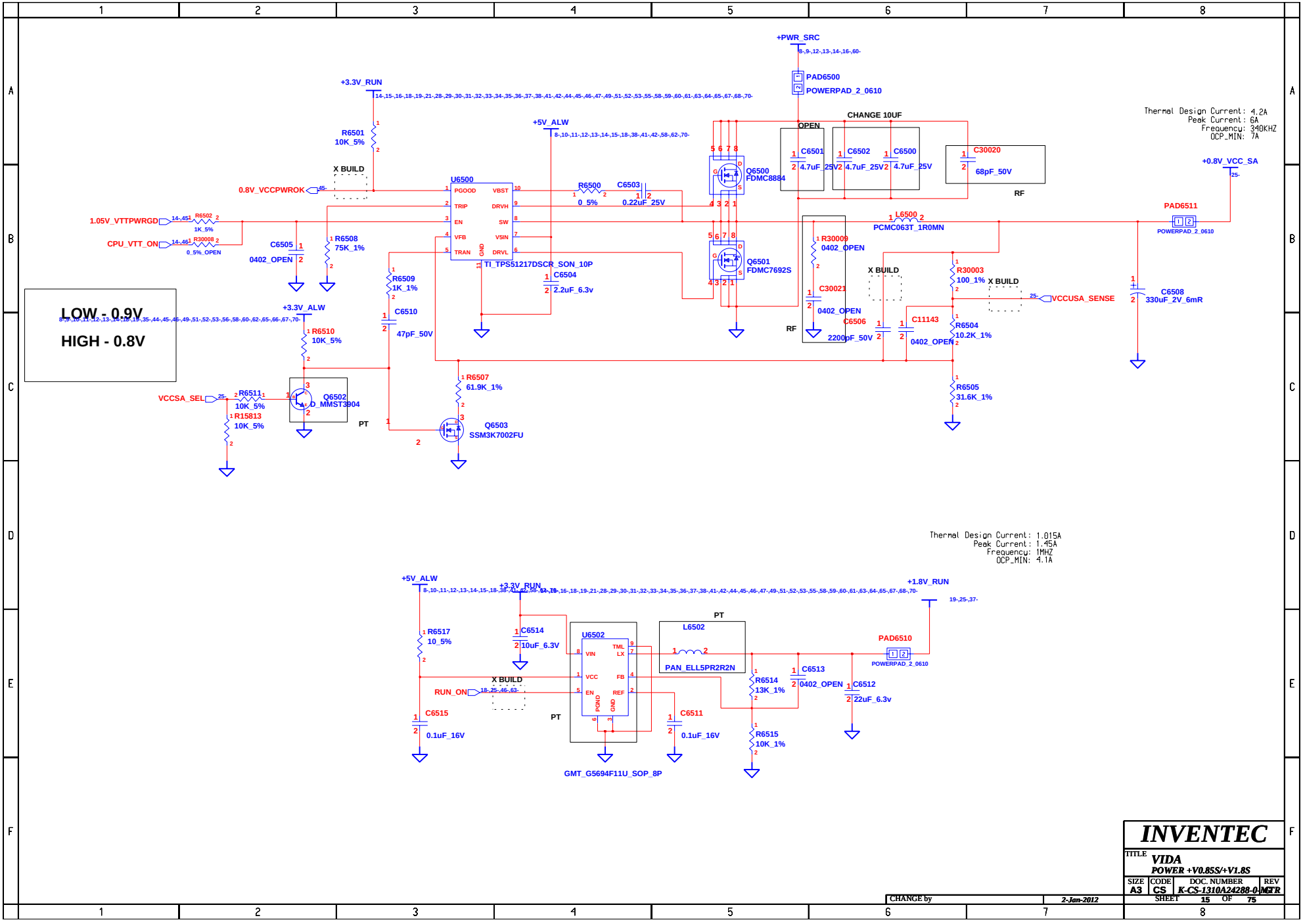

www.teknisi-indonesia.com

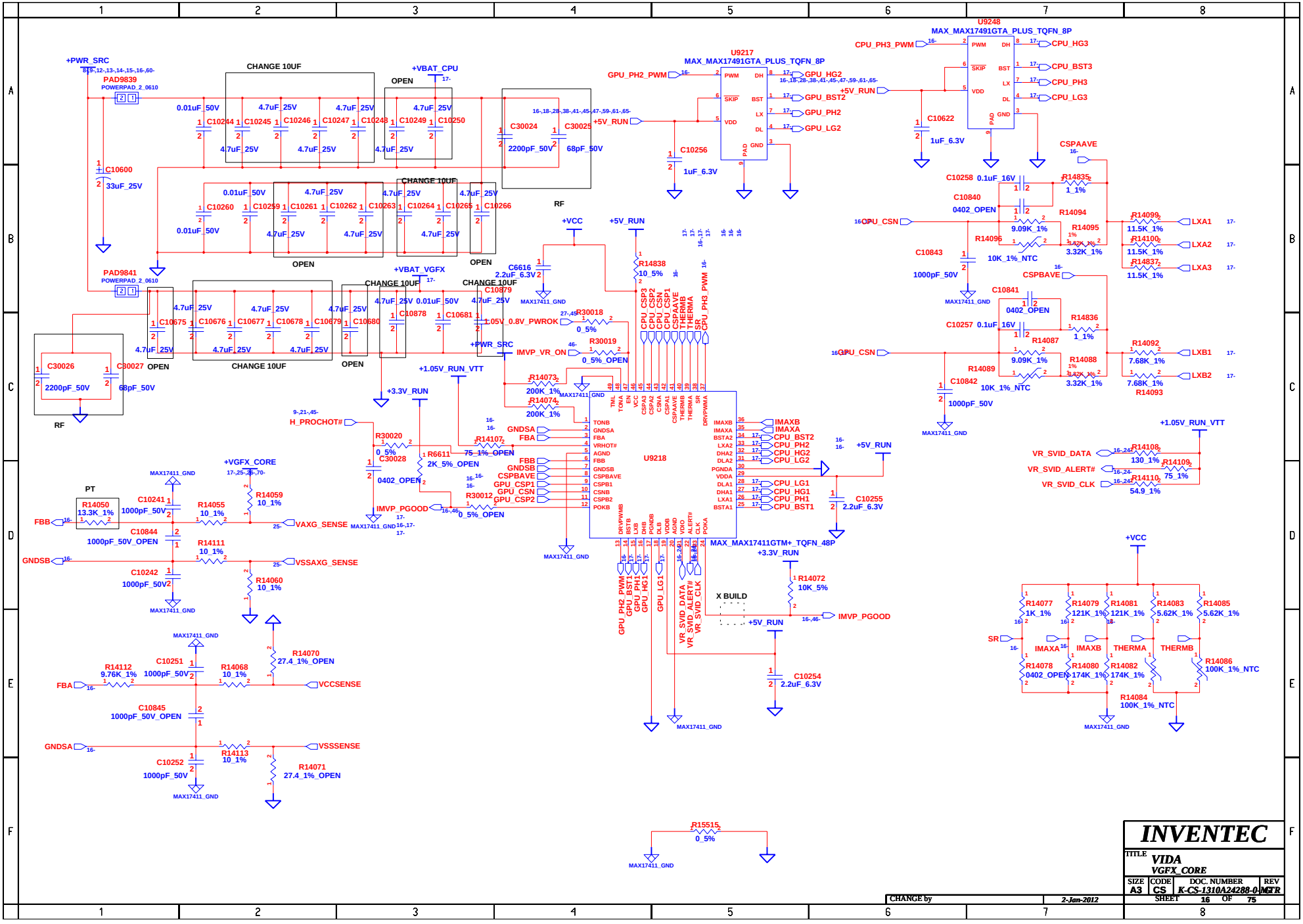

www.teknisi-indonesia.com

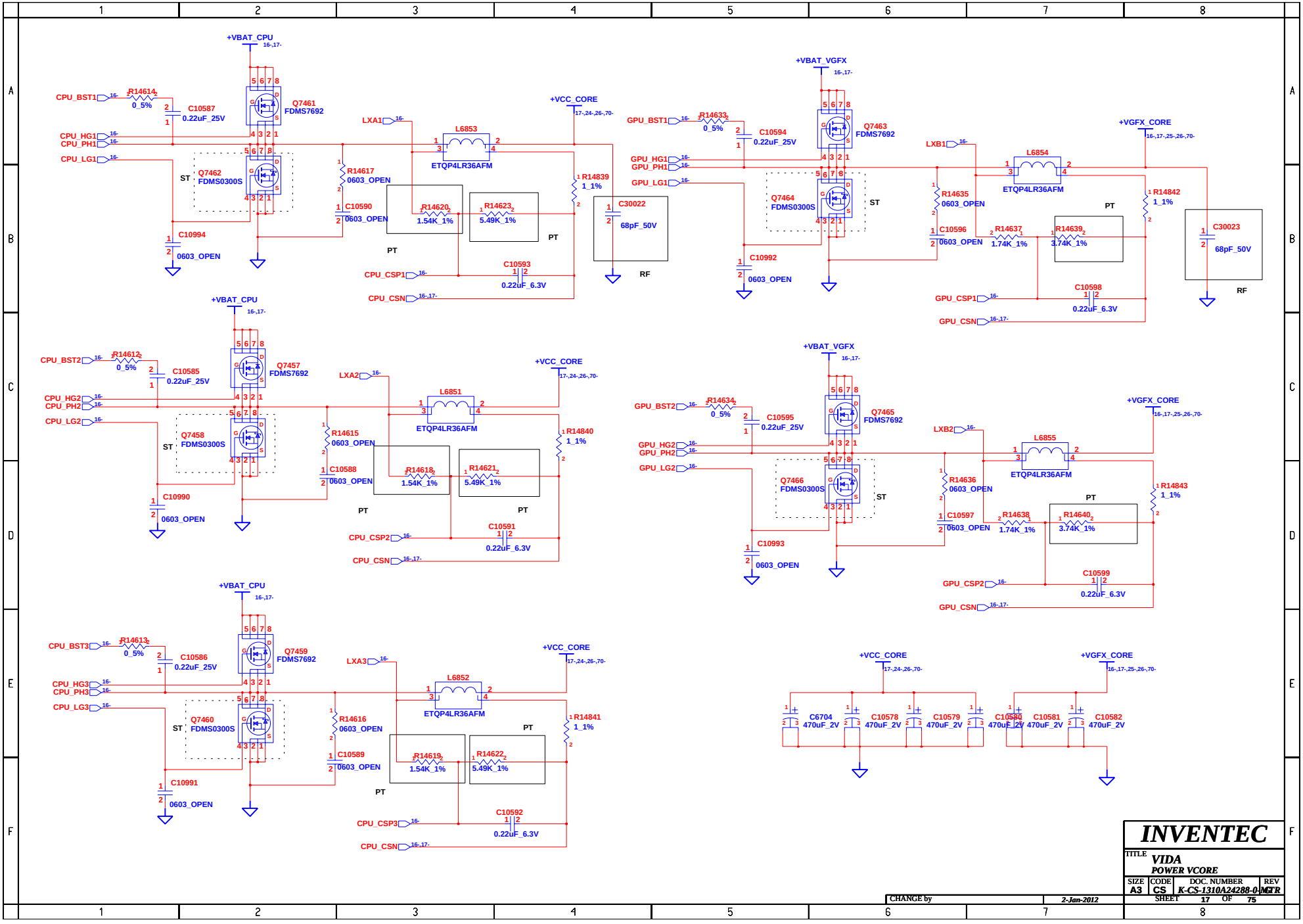

www.teknisi-indonesia.com

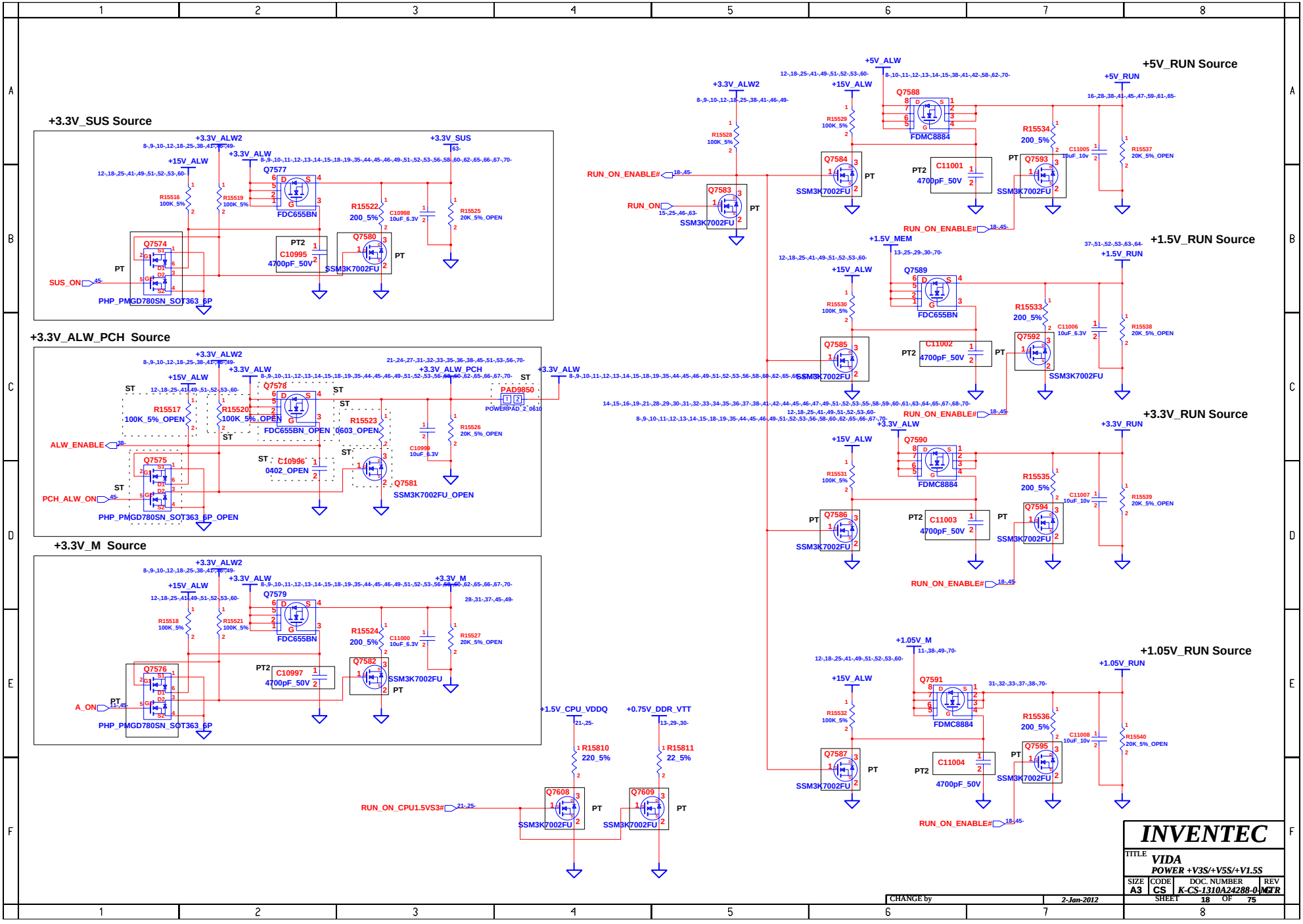

INVENTEC

TITLE VIDA
POWER +V3S/+V5S/+V1.5S

SIZE	CODE	DOC. NUMBER	REV
A3	CS	K-CS-1310A24288-0-MTR	

SHEET 18 OF 75

CHANGE by 2-Jan-2012

www.teknisi-indonesia.com

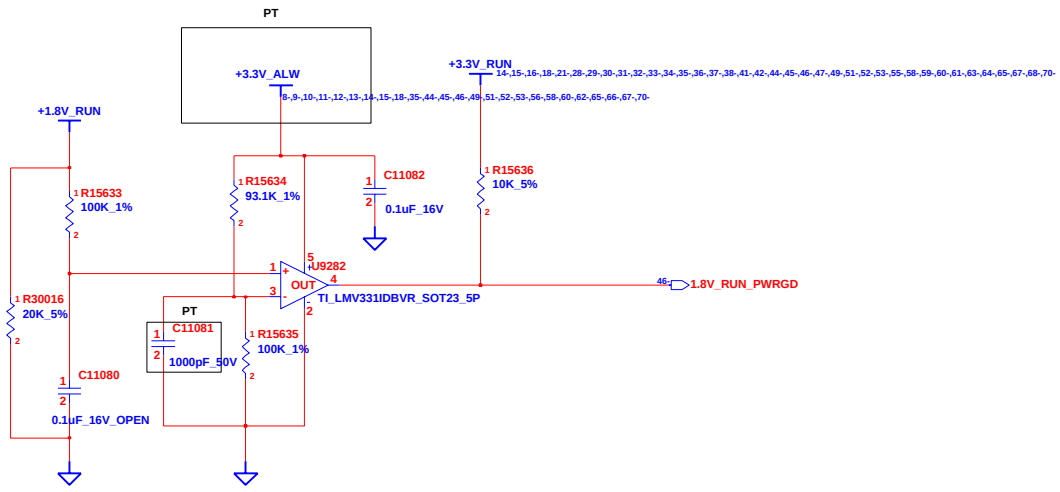

PROPRITARY NOTE: THIS SHEET OF NGINEERING DRAWING AND SPECIFICATIONS CONTAINS CONFIDENTAL TRADE SECRET AND OTHER PROPTIETARY INFORMATION OF DELL INC. ("DELL") THIS DOCUMENT MAY NOT BE TRANSFERRED OR COPIED WITHOUT THE EXPRESS WRITTEN AUTHORIZATION OF DELL. IN ADDITION, NEITHER THIS SHEET NOR THE INFORMATION IT CONTAINS WAY BE USED BY OR DISCLOSED TO ANY THIRD PARTY WITHOUT DELL'S EXPRESS WRITTEN CONSENT.

INVENTEC

TITLE VIDA
POWER SEQ

SIZE	CODE	DOC. NUMBER	REV
A3	CS	K-CS-1310A24288-0-MTR	

CHANGE by 2-Jan-2012 SHEET 19 OF 75

www.teknisi-indonesia.com

INVENTEC	
TITLE	VIDA POWER SEQ
SIZE A3	CODE CS
DOC. NUMBER	K-CS-1310A24288-0-MTR
REV	0
CHANGE by	
2-Jan-2012	
SHEET 20 OF 75	

www.teknisi-indonesia.com

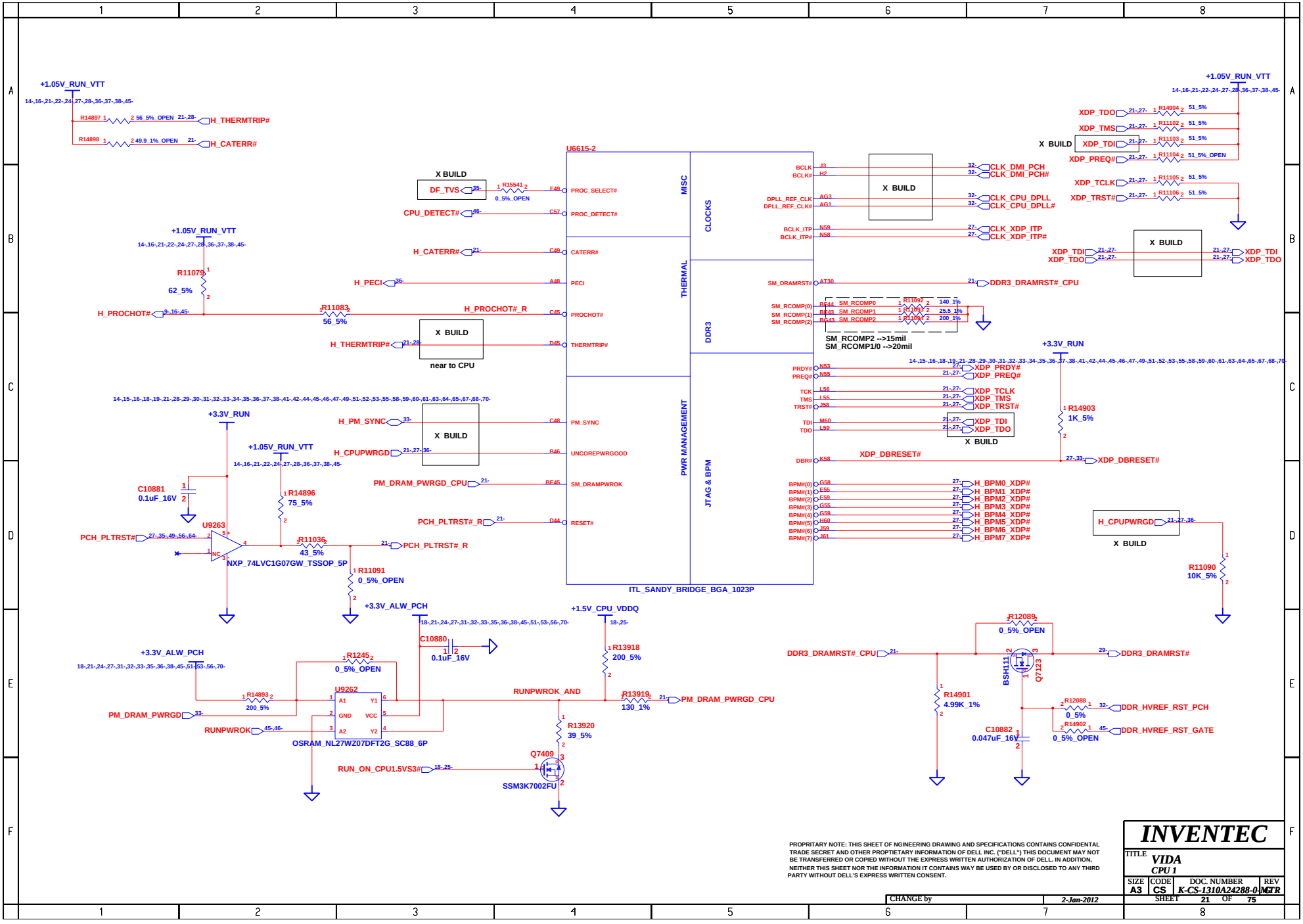

PROPRIATARY NOTE: THIS SHEET OF NGINEERING DRAWING AND SPECIFICATIONS CONTAINS CONFIDENTAL TRADE SECRET AND OTHER PROPTIETARY INFORMATION OF DELL INC. ("DELL") THIS DOCUMENT MAY NOT BE TRANSFERRED OR COPIED WITHOUT THE EXPRESS WRITTEN AUTHORIZATION OF DELL. IN ADDITION, NEITHER THIS SHEET NOR THE INFORMATION IT CONTAINS WAY BE USED BY OR DISCLOSED TO ANY THIRD PARTY WITHOUT DELL'S EXPRESS WRITTEN CONSENT.

INVENTEC

TITLE VIDA
CPU 1

SIZE	CODE	DOC. NUMBER	REV
A3	CS	K-CS-1310A24288-0-MTR	

CHANGE by 2-Jan-2012 SHEET 21 OF 75

www.teknisi-indonesia.com

(1) PEG_RCOMPO (H22) use 4mil connect to PEG_ICOMPI , then use 4mil connect to R15363

(2) PEG_ICOMPO use 12mil connect to R15363

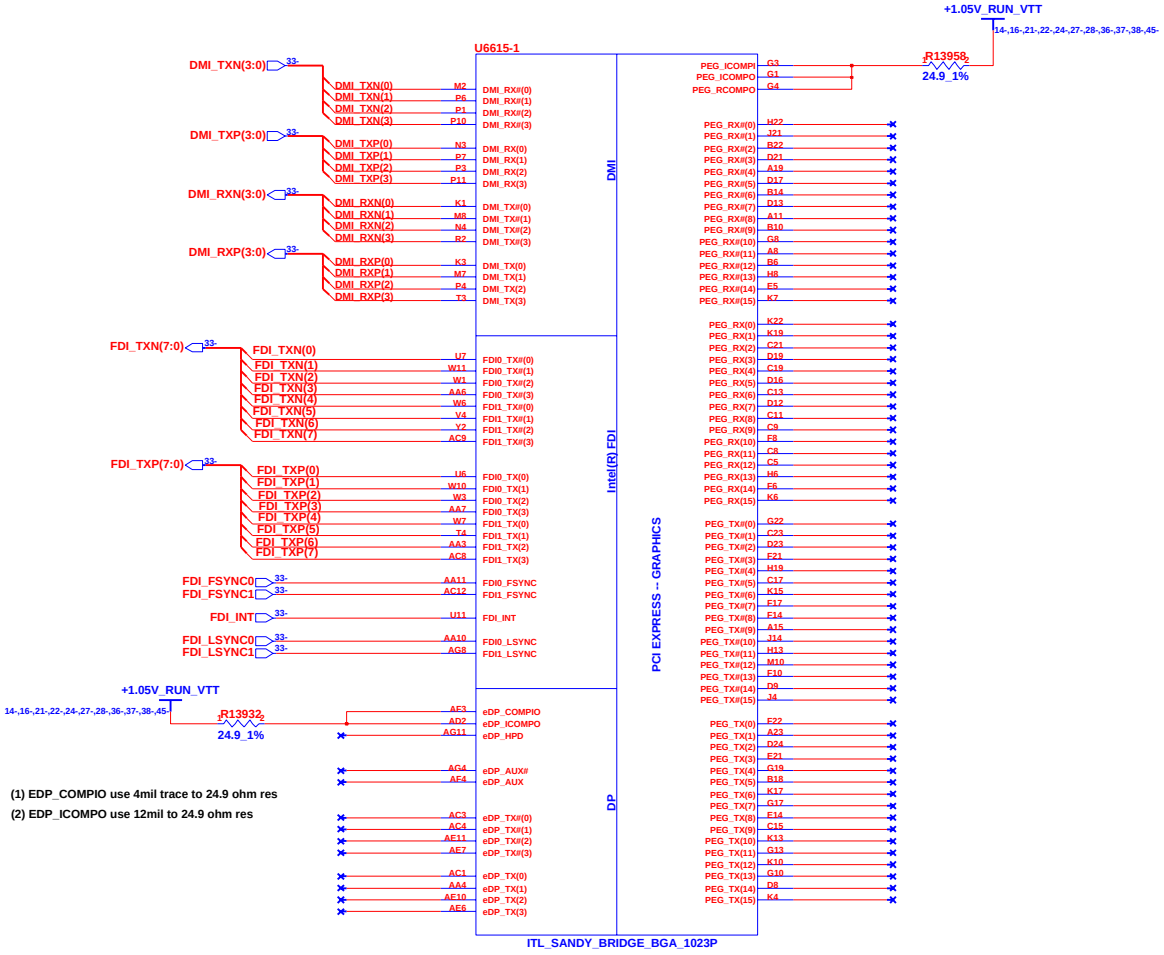

(1) EDP_COMPIO use 4mil trace to 24.9 ohm res

(2) EDP_ICOMPO use 12mil to 24.9 ohm res

INVENTEC			
TITLE VIDA CPU 2			
SIZE A3	CODE CS	DOC. NUMBER K-CS-1310A24288-0-MTR	REV
CHANGE by		2-Jan-2012	SHEET 22 OF 75

www.teknisi-indonesia.com

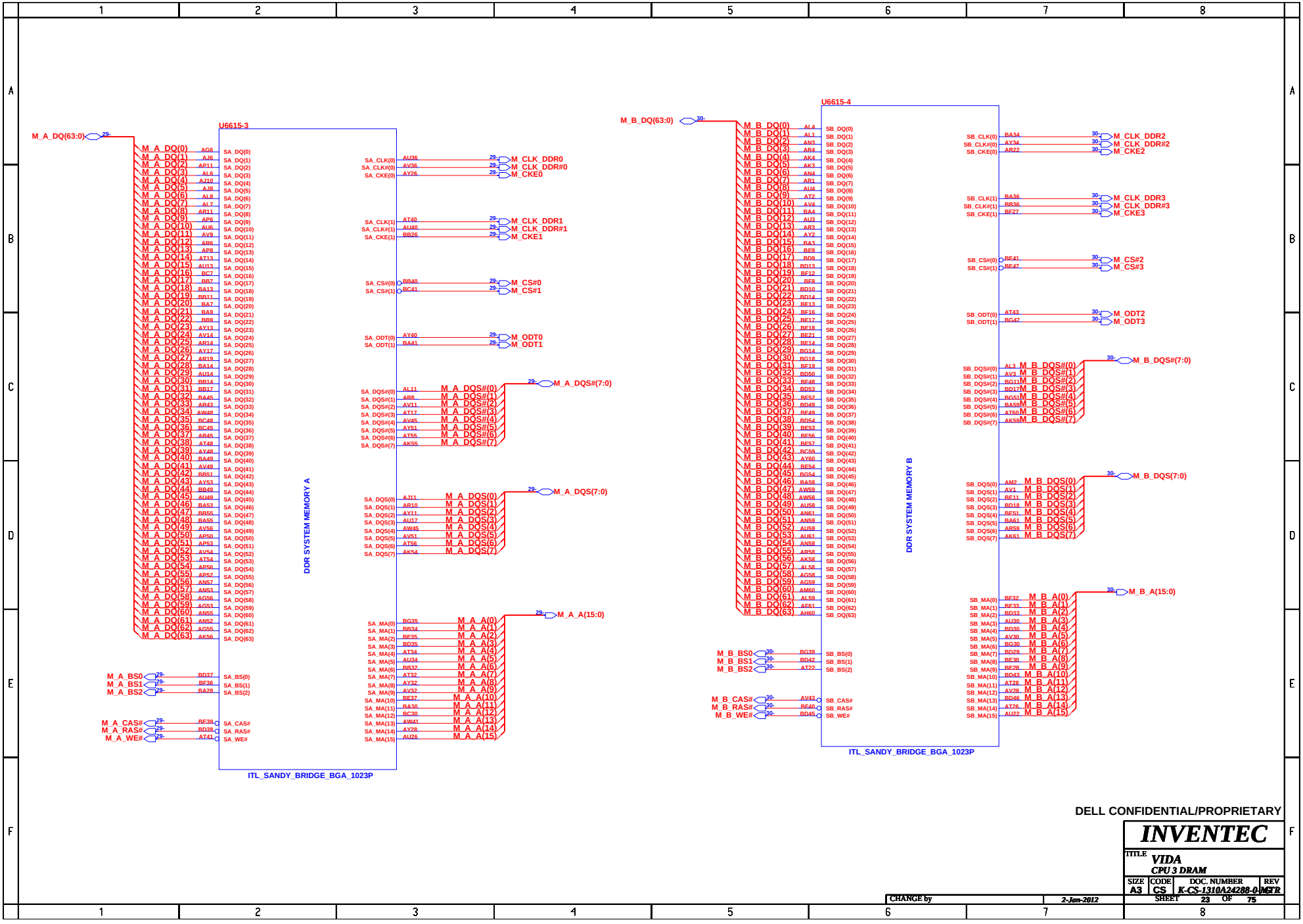

DELL CONFIDENTIAL/PROPRIETARY

INVENTEC

TITLE: VIDA
CPU 3 DRAM

SIZE	CODE	DOC. NUMBER	REV
A3	CS	K-CS-1310A24288-0-MTR	

CHANGE by | 2-Jan-2012 | SHEET 23 OF 75

www.teknisi-indonesia.com

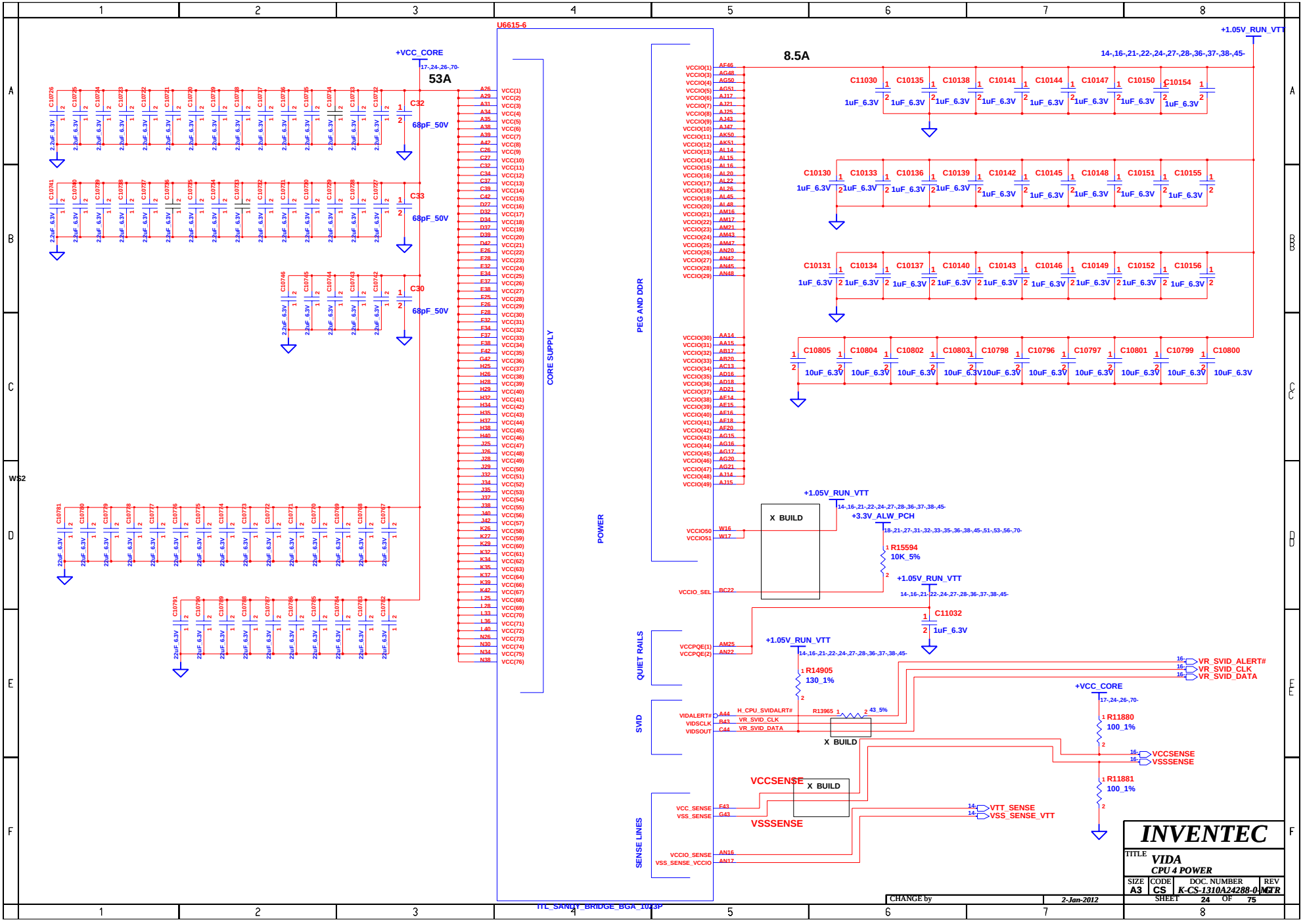

www.teknisi-indonesia.com

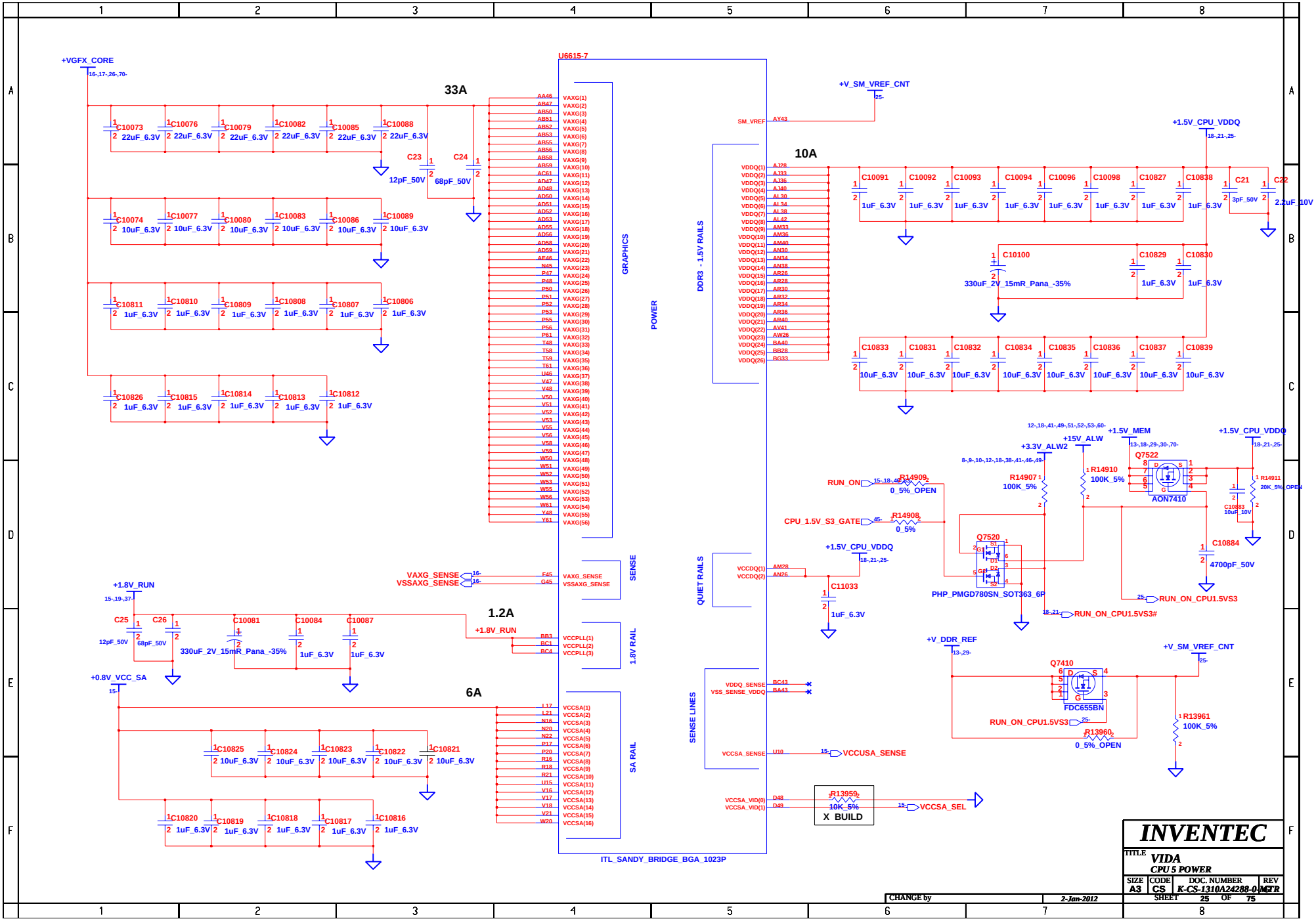

www.teknisi-indonesia.com

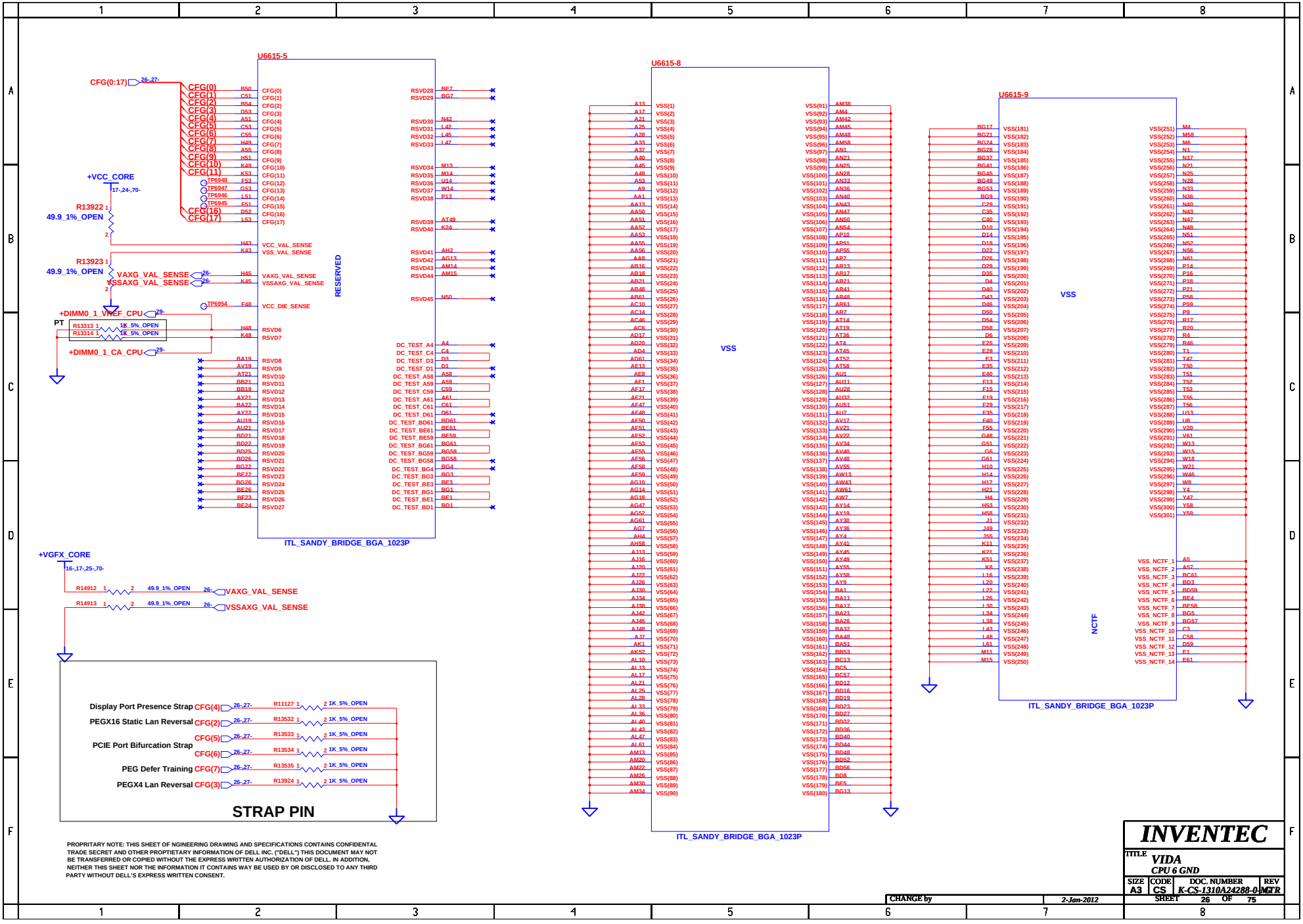

www.teknisi-indonesia.com

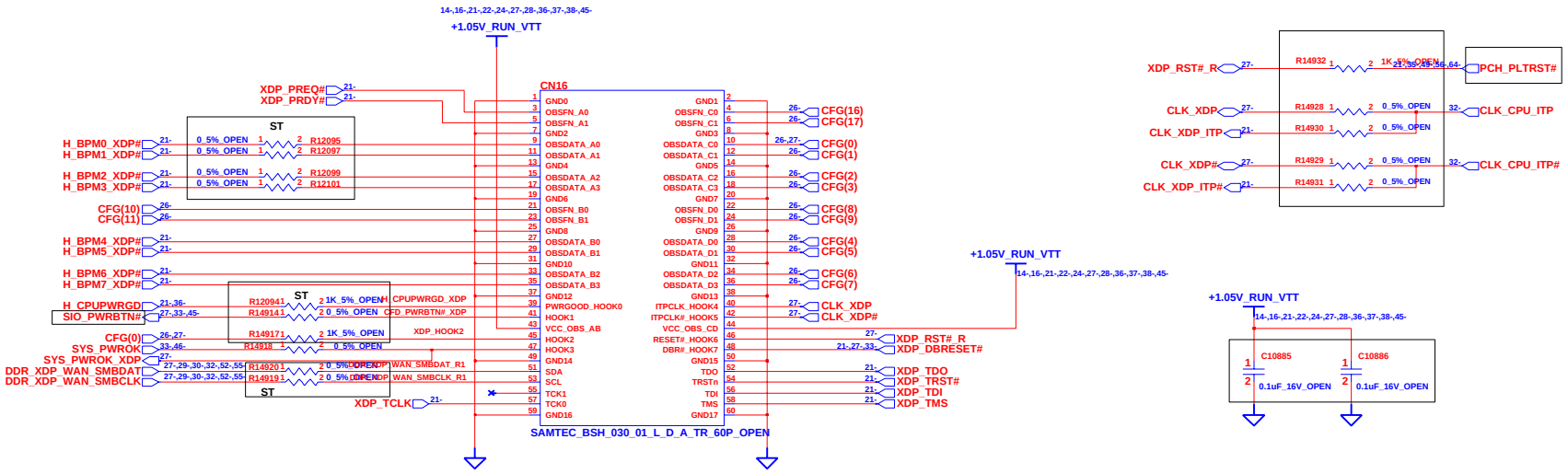

CPU XDP CONNECTOR

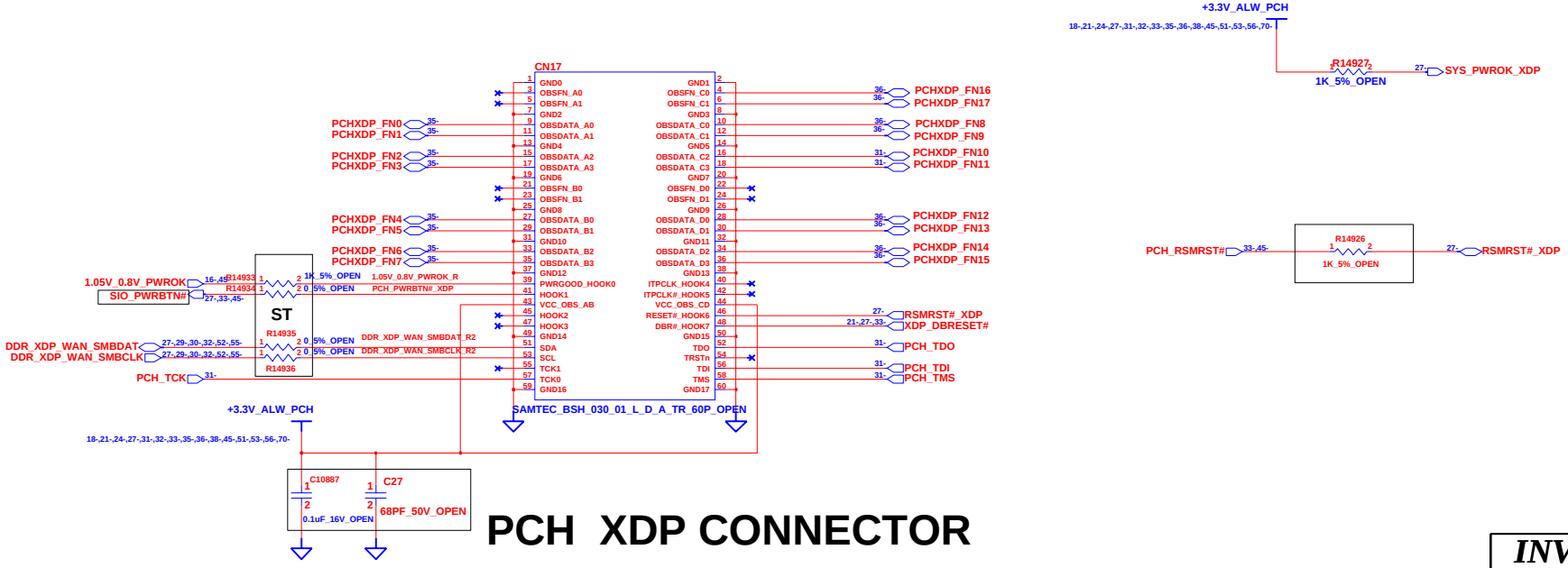

PCH XDP CONNECTOR

PROPRIETARY NOTE: THIS SHEET OF ENGINEERING DRAWING AND SPECIFICATIONS CONTAINS CONFIDENTIAL TRADE SECRET AND OTHER PROPRIETARY INFORMATION OF DELL INC. ("DELL") THIS DOCUMENT MAY NOT BE TRANSFERRED OR COPIED WITHOUT THE EXPRESS WRITTEN AUTHORIZATION OF DELL. IN ADDITION, NEITHER THIS SHEET NOR THE INFORMATION IT CONTAINS MAY BE USED BY OR DISCLOSED TO ANY THIRD PARTY WITHOUT DELL'S EXPRESS WRITTEN CONSENT.

CHANGE by		2-Jan-2012	

INVENTEC

TITLE: VIDA
ITP CONN

SIZE	CODE	DOC. NUMBER	REV
A3	CS	K-CS-1310A24288-0-MTR	

SHEET 27 OF 75

www.teknisi-indonesia.com

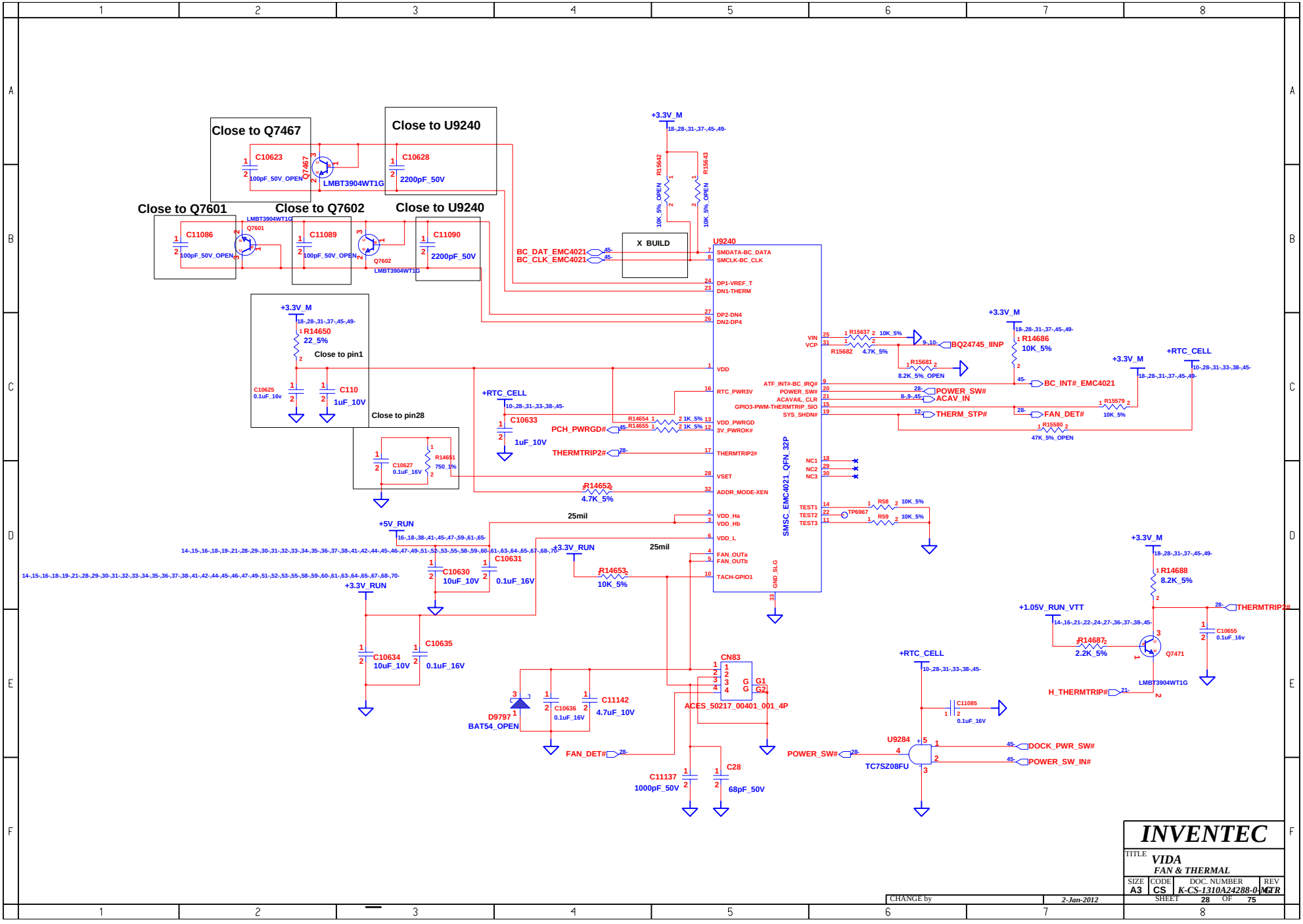

www.teknisi-indonesia.com

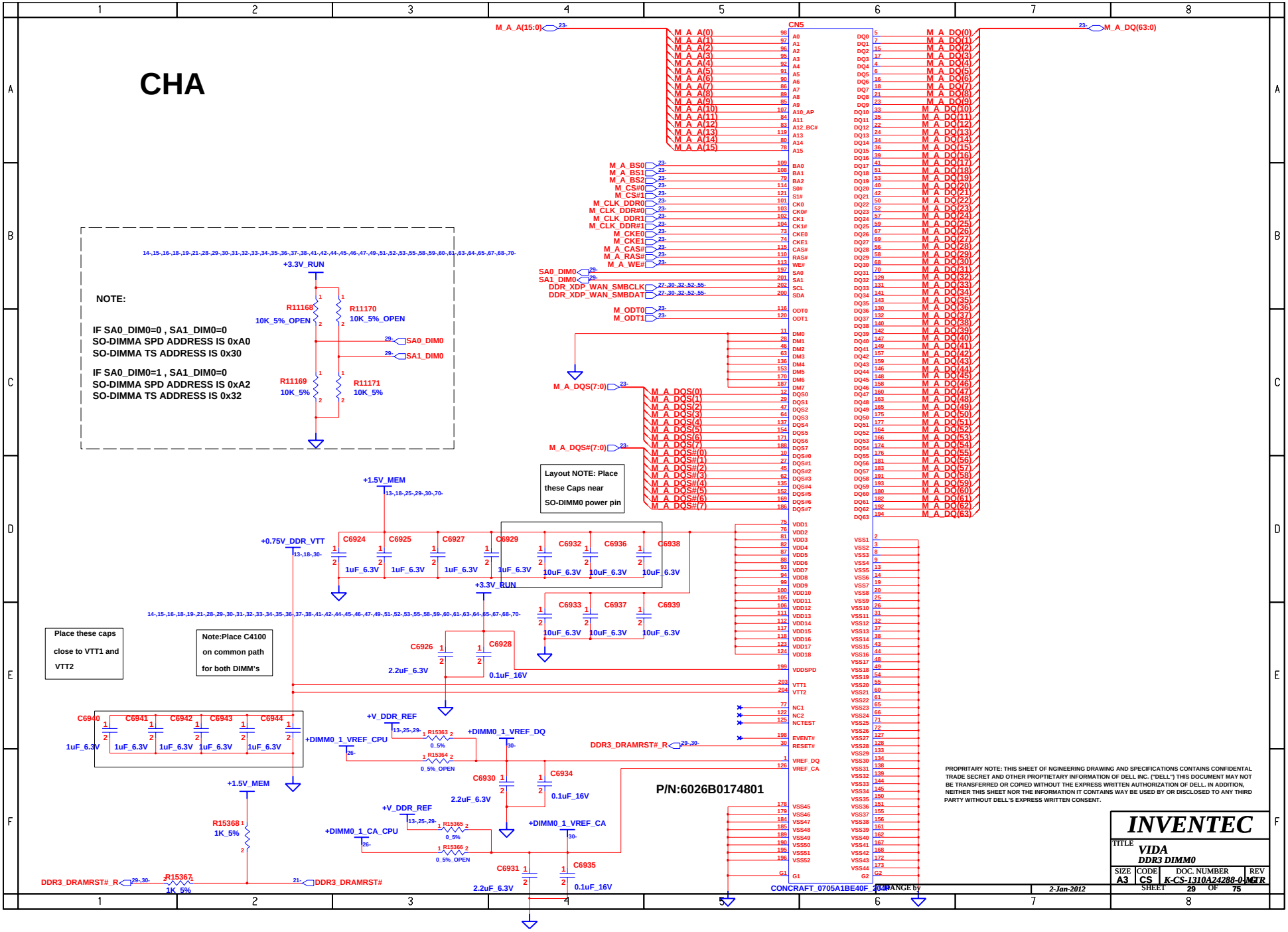

www.teknisi-indonesia.com

CHB

P/N:6026B0157613

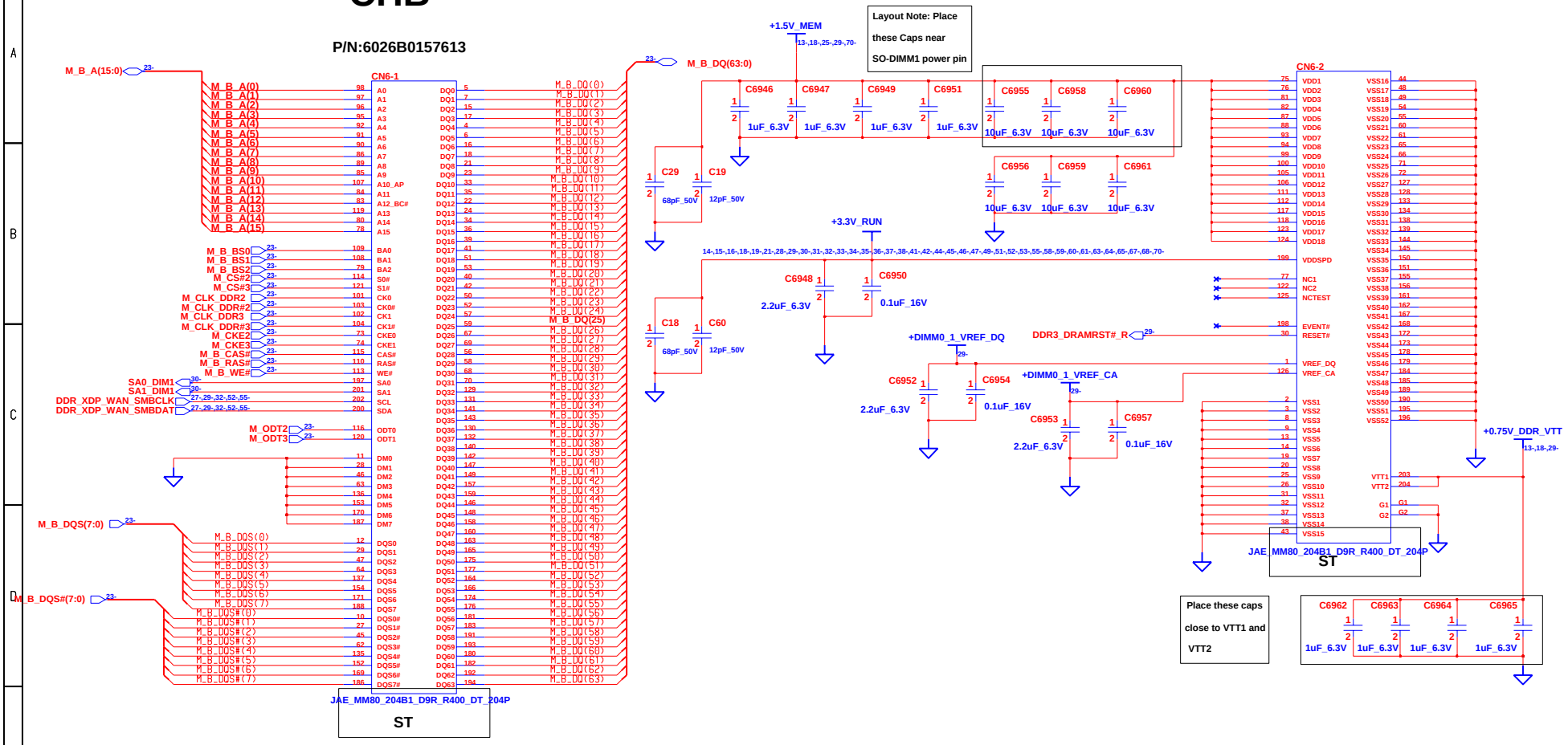

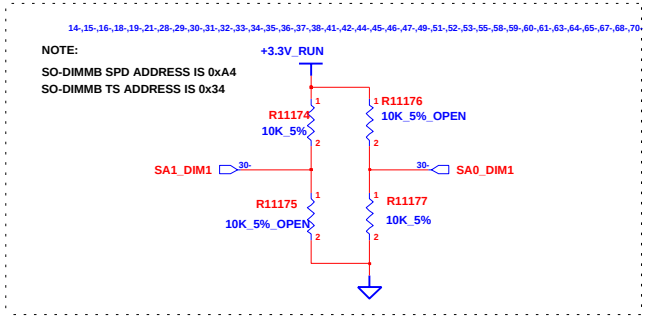

PROPRITARY NOTE: THIS SHEET OF NGINEERING DRAWING AND SPECIFICATIONS CONTAINS CONFIDENTAL TRADE SECRET AND OTHER PROPTIETARY INFORMATION OF DELL INC. ("DELL") THIS DOCUMENT MAY NOT BE TRANSFERRED OR COPIED WITHOUT THE EXPRESS WRITTEN AUTHORIZATION OF DELL. IN ADDITION, NEITHER THIS SHEET NOR THE INFORMATION IT CONTAINS WAY BE USED BY OR DISCLOSED TO ANY THIRD PARTY WITHOUT DELL'S EXPRESS WRITTEN CONSENT.

INVENTEC

TITLE VIDA
DDR3 DIMM1

SIZE	CODE	DOC. NUMBER	REV
A3	CS	K-CS-1310A24288-0-MTR	

CHANGE by 2-Jan-2012 SHEET 30 OF 75

www.teknisi-indonesia.com

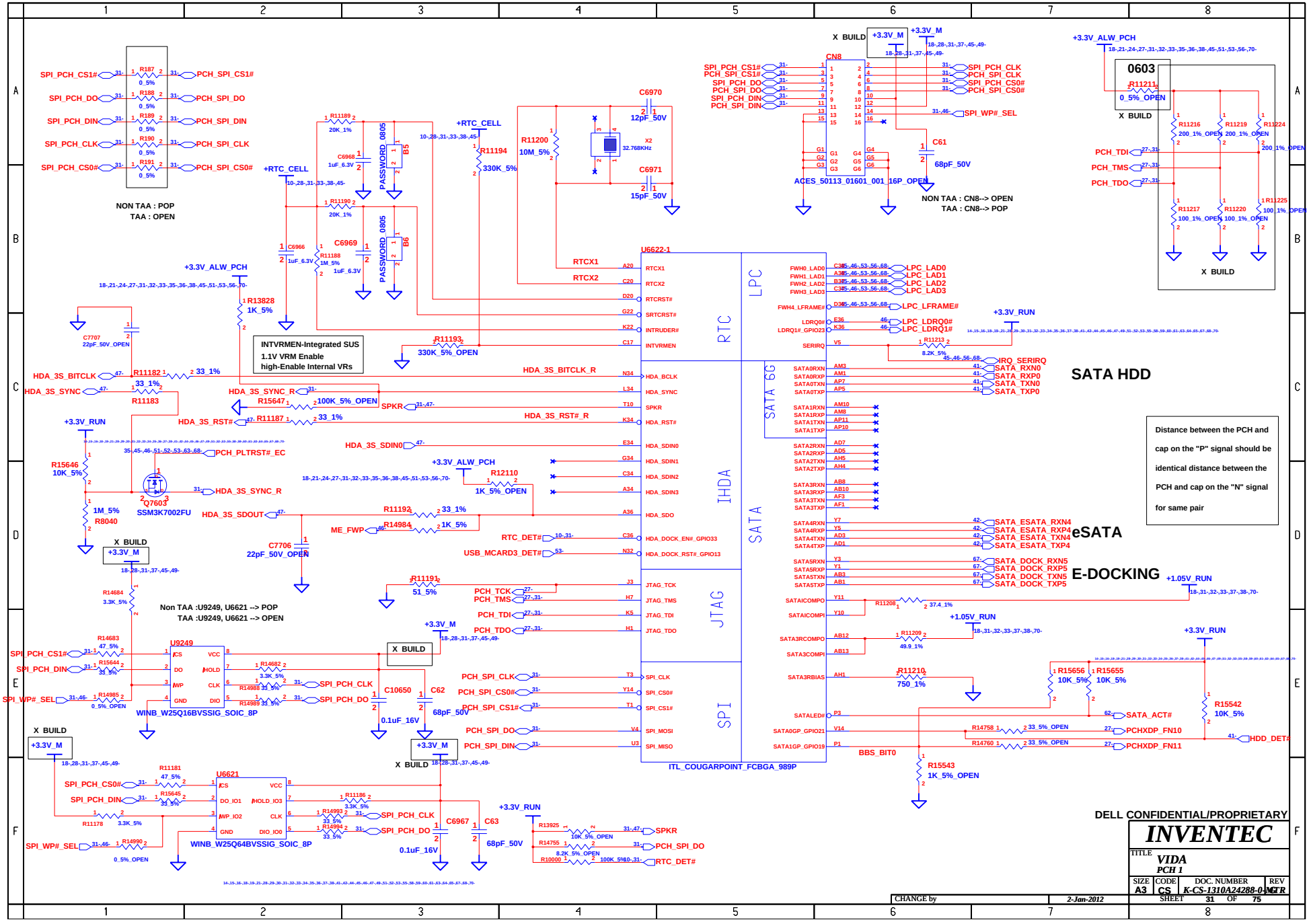

www.teknisi-indonesia.com

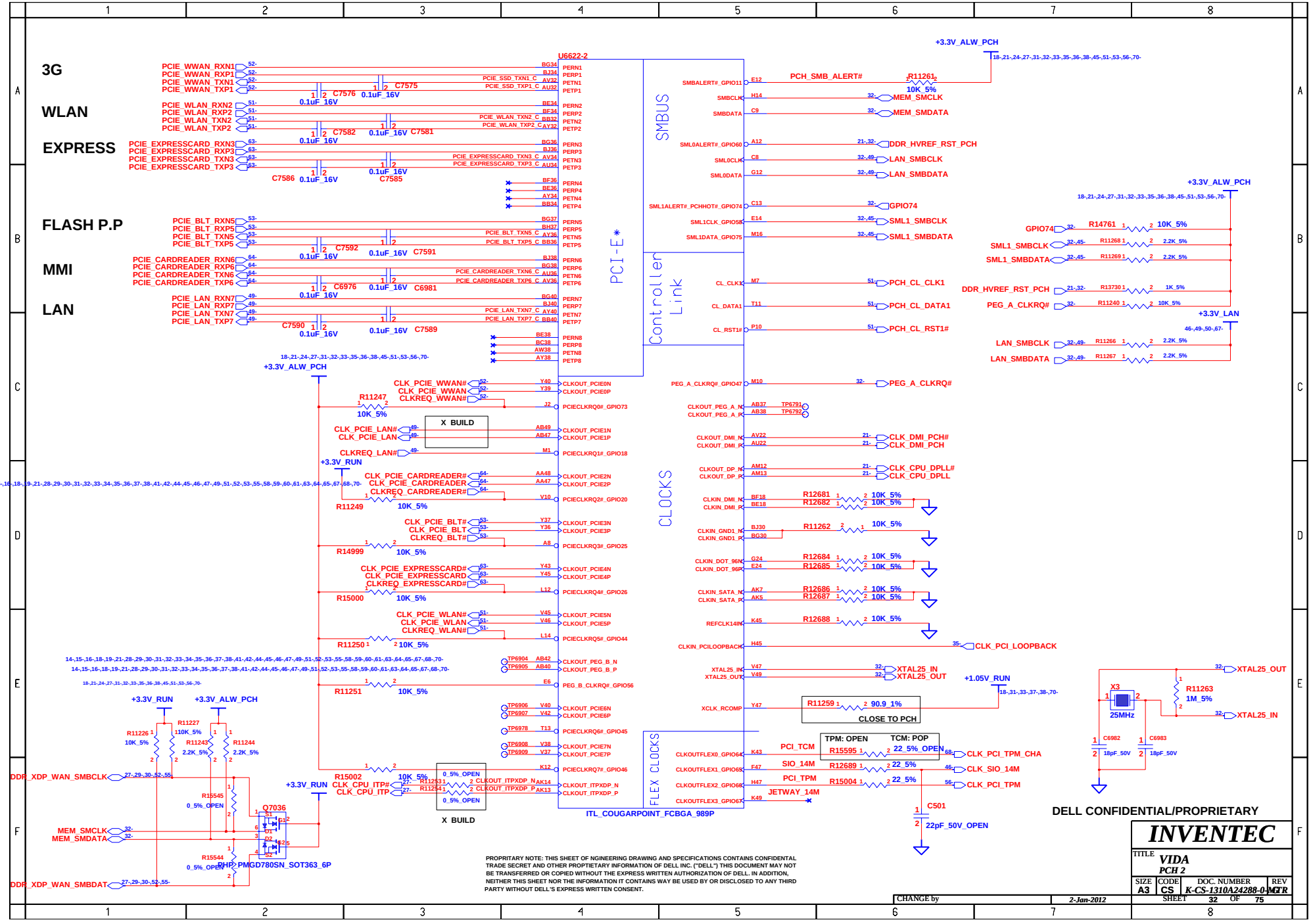

PROPRITARY NOTE: THIS SHEET OF NGINEERING DRAWING AND SPECIFICATIONS CONTAINS CONFIDENTAL TRADE SECRET AND OTHER PROPRIETARY INFORMATION OF DELL INC. ("DELL") THIS DOCUMENT MAY NOT BE TRANSFERRED OR COPIED WITHOUT THE EXPRESS WRITTEN AUTHORIZATION OF DELL. IN ADDITION, NEITHER THIS SHEET NOR THE INFORMATION IT CONTAINS WAY BE USED BY OR DISCLOSED TO ANY THIRD PARTY WITHOUT DELL'S EXPRESS WRITTEN CONSENT.

DELL CONFIDENTIAL/PROPRIETARY

INVENTEC

TITLE VIDA PCH 2

SIZE	CODE	DOC. NUMBER	REV
A3	CS	K-CS-1310A24288-0-MTR	

CHANGE by 2-Jan-2012 SHEET 32 OF 75

www.teknisi-indonesia.com

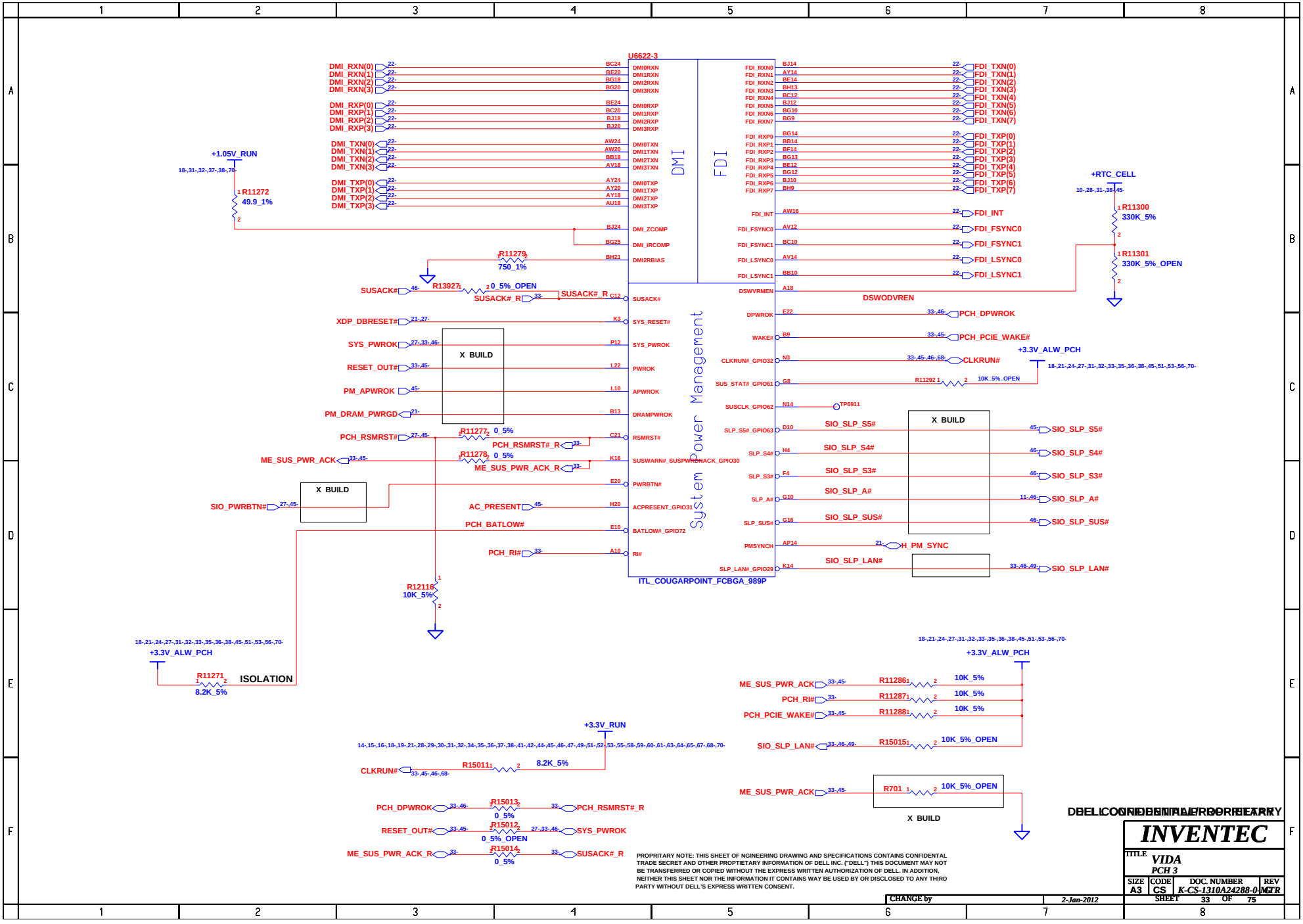

www.teknisi-indonesia.com

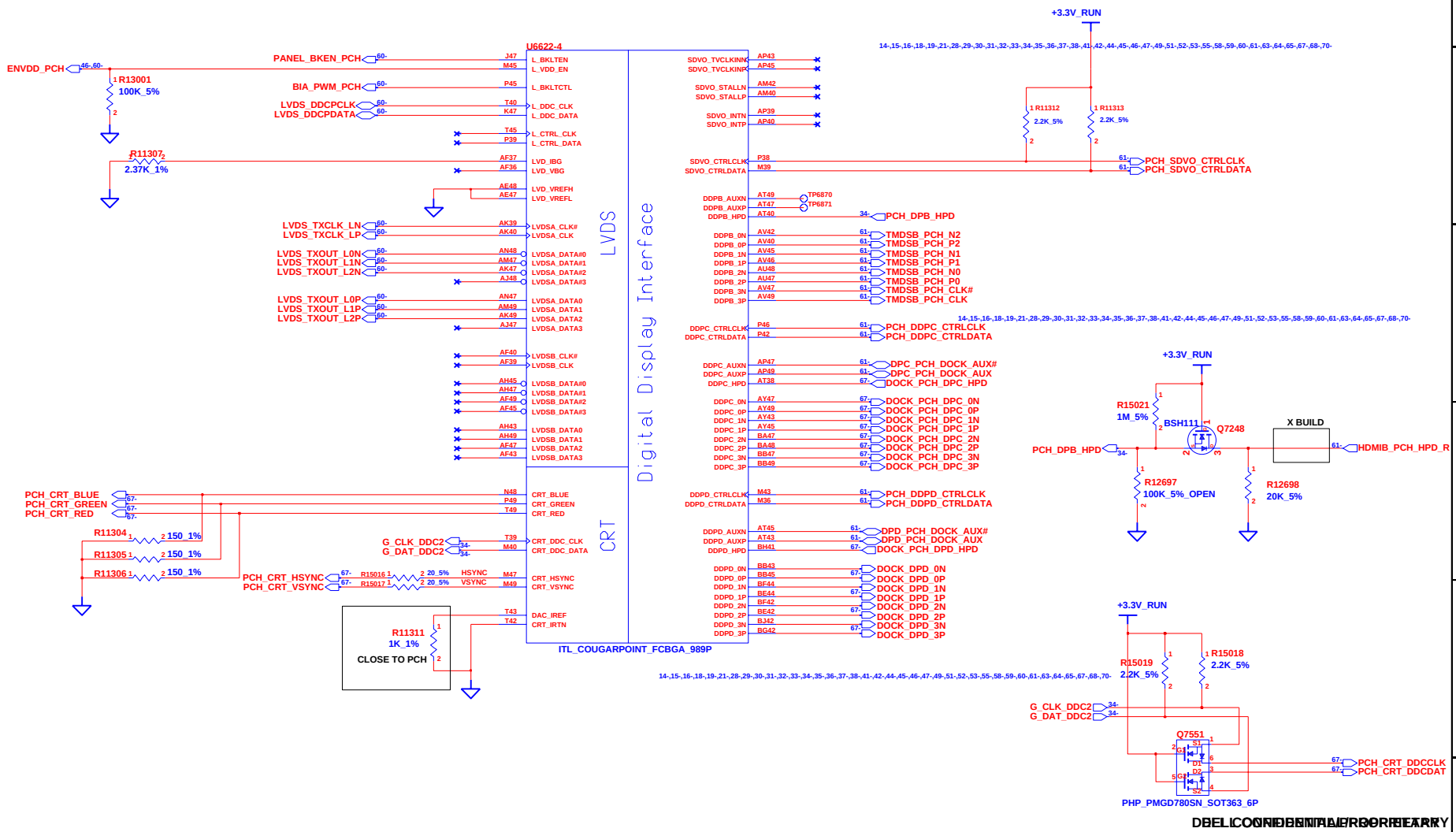

PROPRITARY NOTE: THIS SHEET OF NGINEERING DRAWING AND SPECIFICATIONS CONTAINS CONFIDENTAL TRADE SECRET AND OTHER PROPTIETARY INFORMATION OF DELL INC. ("DELL") THIS DOCUMENT MAY NOT BE TRANSFERRED OR COPIED WITHOUT THE EXPRESS WRITTEN AUTHORIZATION OF DELL. IN ADDITION, NEITHER THIS SHEET NOR THE INFORMATION IT CONTAINS WAY BE USED BY OR DISCLOSED TO ANY THIRD PARTY WITHOUT DELL'S EXPRESS WRITTEN CONSENT.

INVENTEC

TITLE VIDA PCH 4

SIZE	CODE	DOC. NUMBER	REV
A3	CS	K-CS-1310A24288-0-MTR	

CHANGE by 2-Jan-2012 SHEET 34 OF 75

www.teknisi-indonesia.com

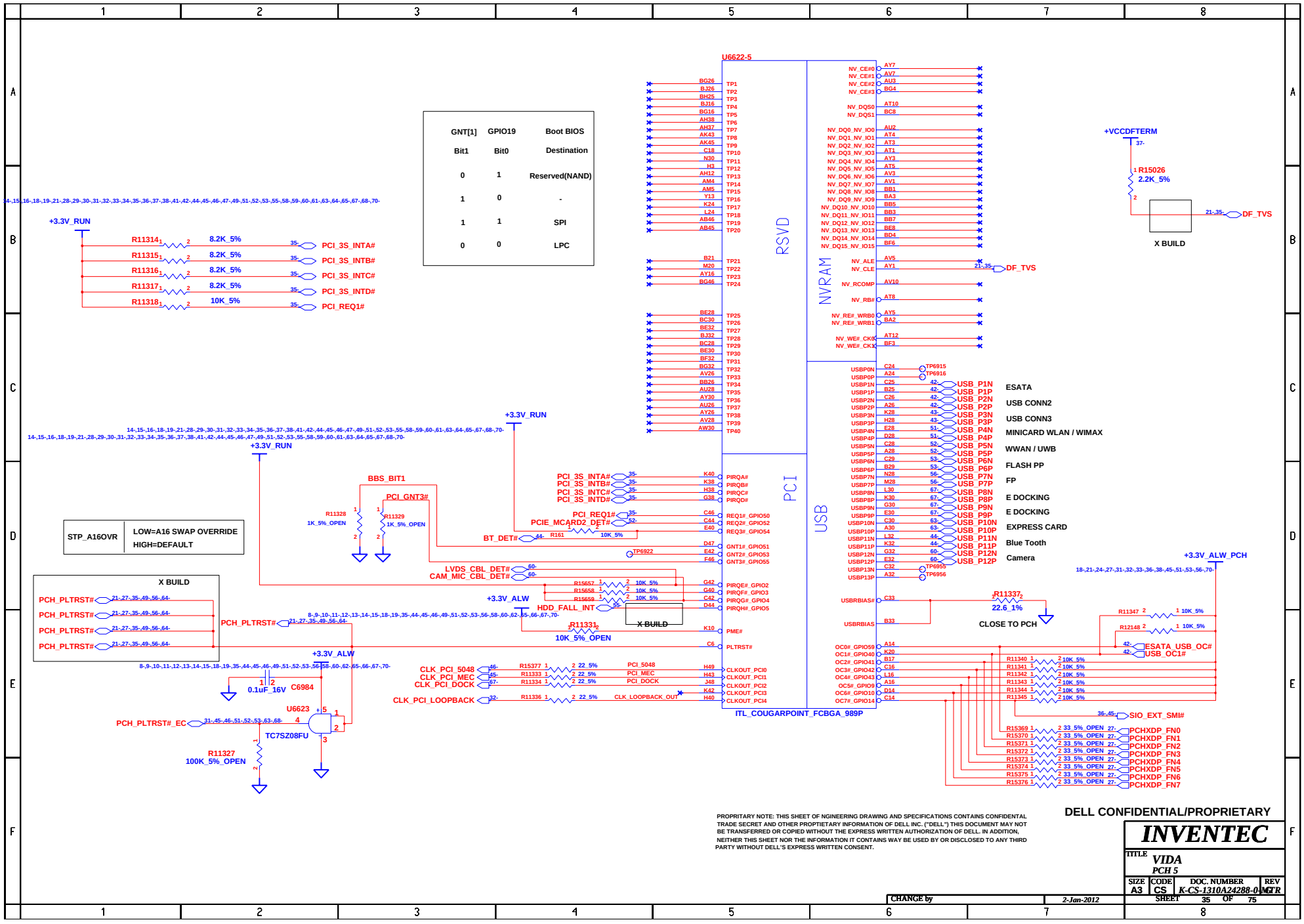

www.teknisi-indonesia.com

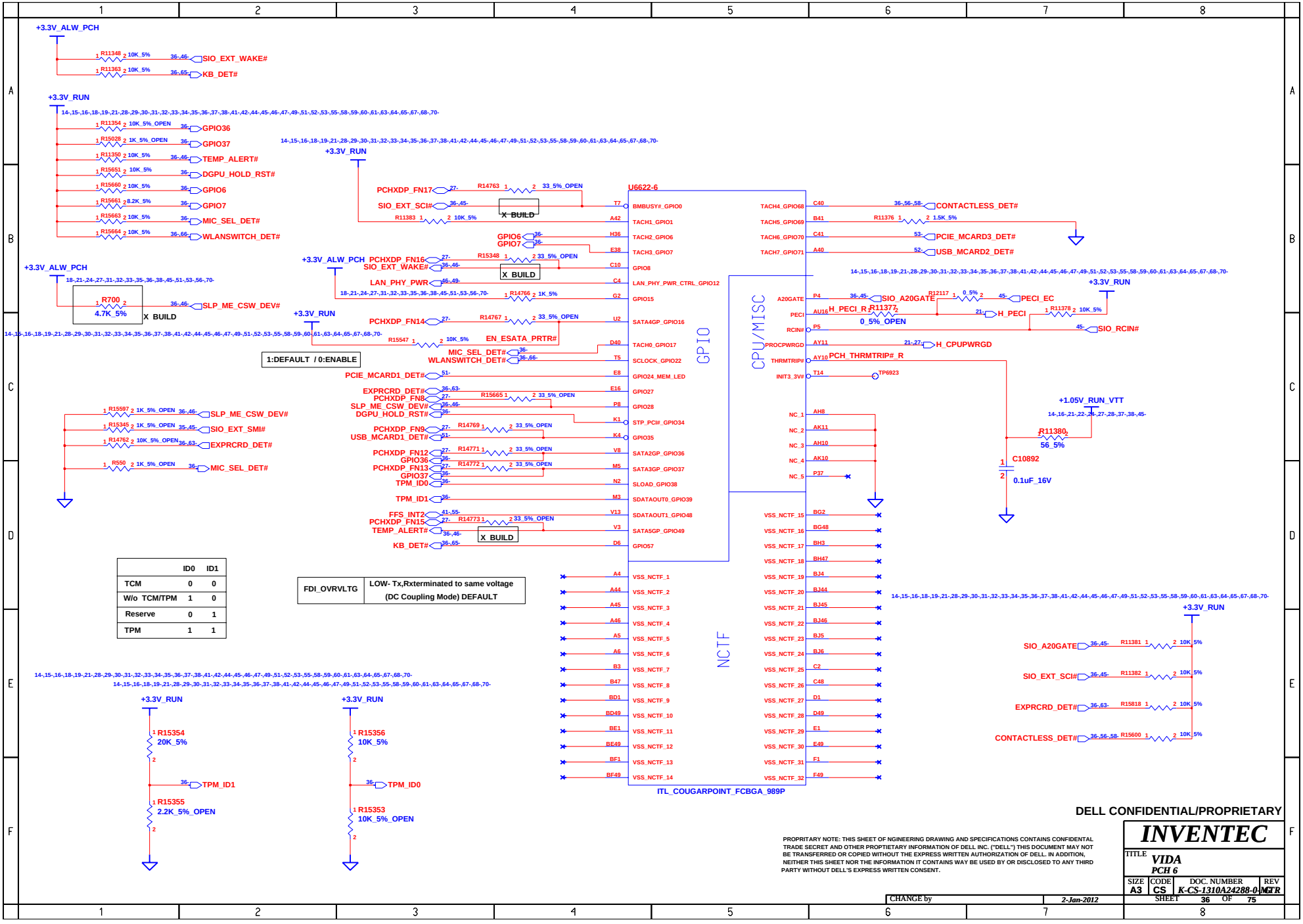

	ID0	ID1
TCM	0	0
W/o TCM/TPM	1	0
Reserve	0	1
TPM	1	1

FDI_OVRVLTG	LOW- Tx,Rxterminated to same voltage (DC Coupling Mode) DEFAULT

DELL CONFIDENTIAL/PROPRIETARY

PROPRIETARY NOTE: THIS SHEET OF ENGINEERING DRAWING AND SPECIFICATIONS CONTAINS CONFIDENTIAL TRADE SECRET AND OTHER PROPTIETARY INFORMATION OF DELL INC. ("DELL") THIS DOCUMENT MAY NOT BE TRANSFERRED OR COPIED WITHOUT THE EXPRESS WRITTEN AUTHORIZATION OF DELL. IN ADDITION, NEITHER THIS SHEET NOR THE INFORMATION IT CONTAINS WAY BE USED BY OR DISCLOSED TO ANY THIRD PARTY WITHOUT DELL'S EXPRESS WRITTEN CONSENT.

INVENTEC

TITLE VIDA PCH 6

SIZE	CODE	DOC. NUMBER	REV
A3	CS	K-CS-1310A24288-0-MTR	

CHANGE by 2-Jan-2012 SHEET 36 OF 75

www.teknisi-indonesia.com

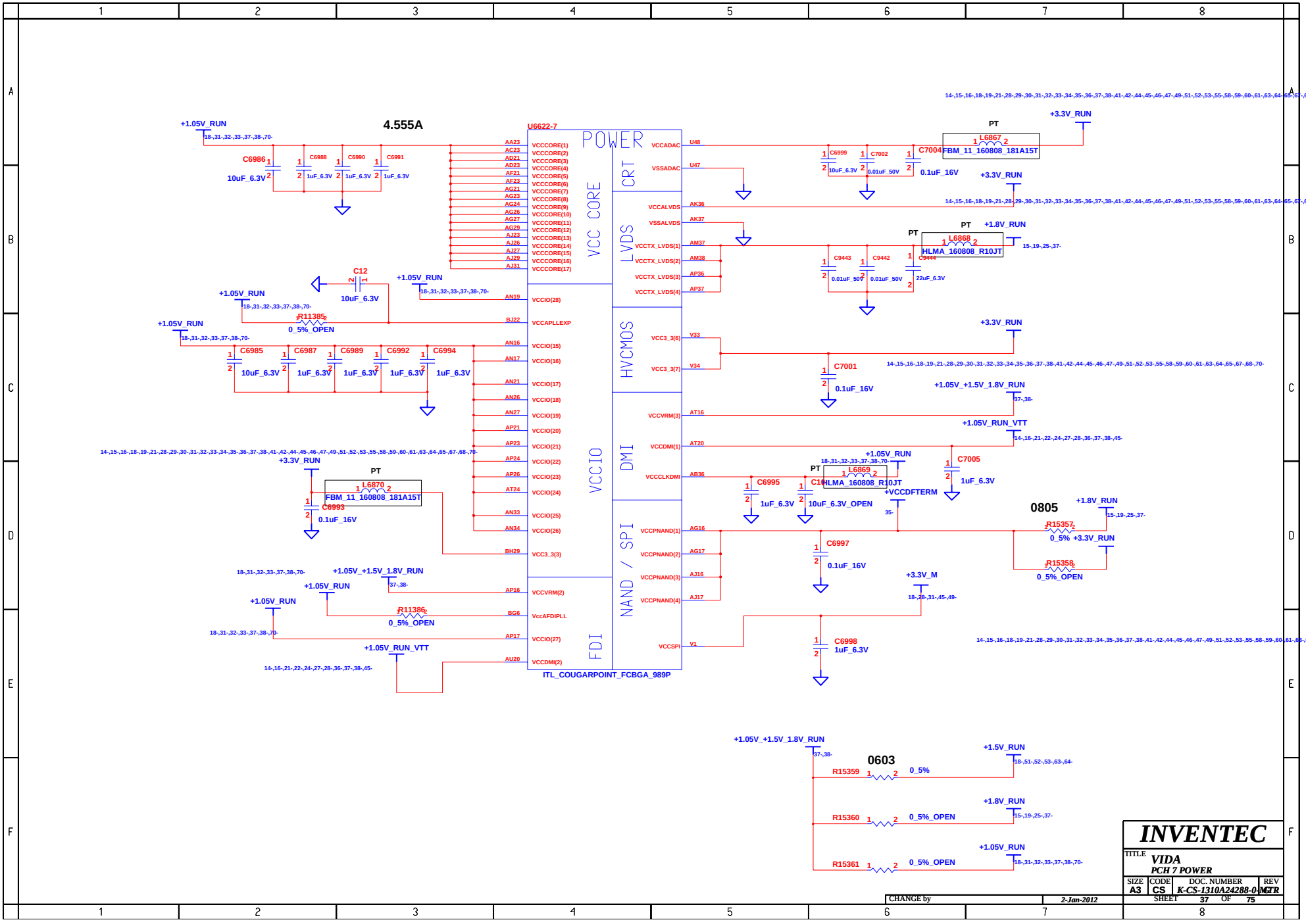

www.teknisi-indonesia.com

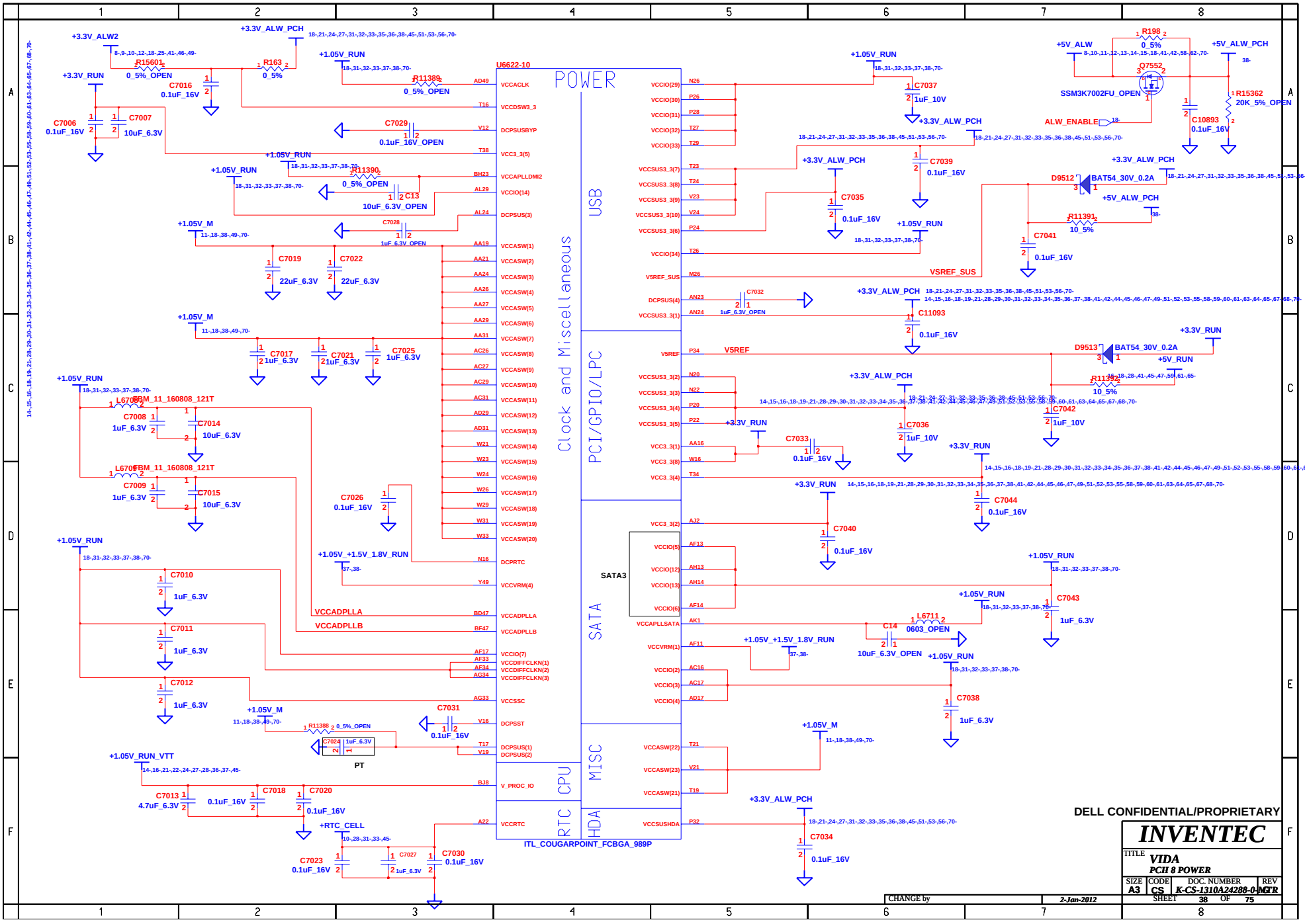

DELL CONFIDENTIAL/PROPRIETARY

INVENTEC

TITLE: VIDA
PCH 8 POWER

SIZE	CODE	DOC. NUMBER	REV
A3	CS	K-CS-1310A24288-0-MTR	

CHANGE by | 2-Jan-2012 | SHEET 38 OF 75

www.teknisi-indonesia.com

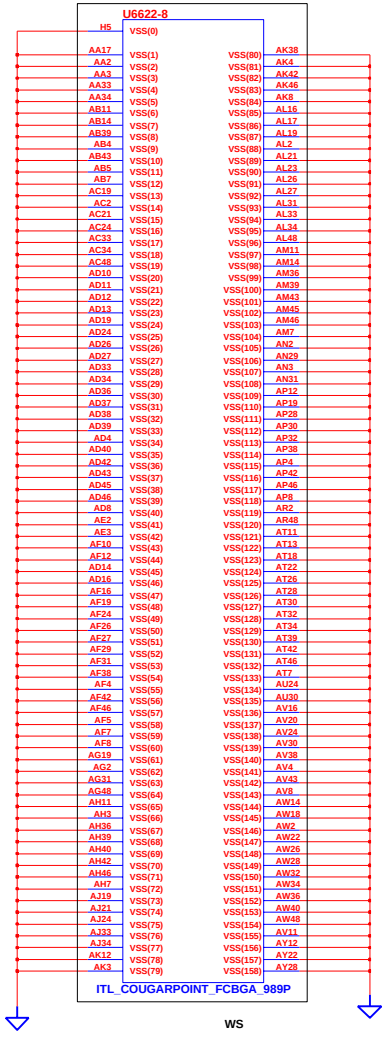

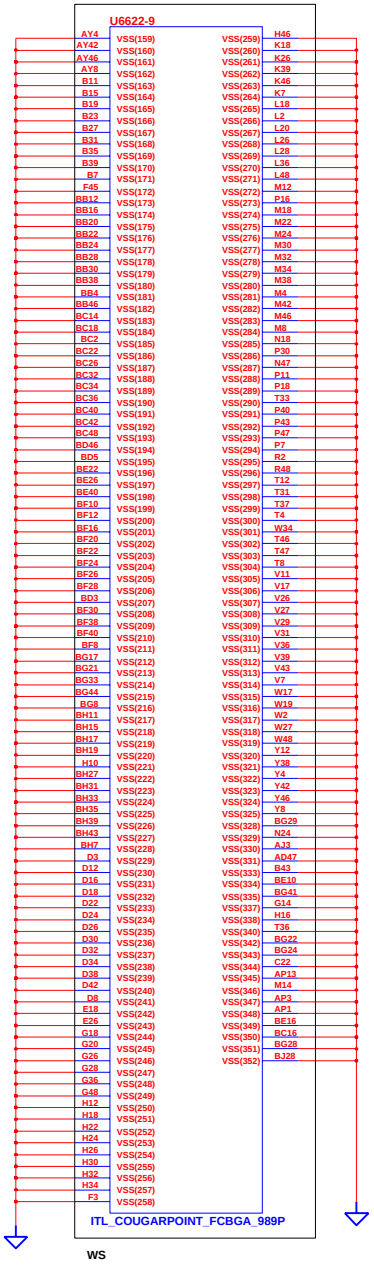

CHANGE by		2-Jan-2012	

INVENTEC

TITLE *VIDA*
PCH 9 GND

SIZE	CODE	DOC. NUMBER	REV
A3	CS	K-CS-1310A24288-0-MTR	

SHEET 39 OF 75

www.teknisi-indonesia.com

BLANK

INVENTEC			
TITLE VIDA CAMERA			
SIZE A3	CODE CS	DOC. NUMBER K-CS-1310A24288-0-MTR	REV
CHANGE by	2-Jan-2012	SHEET 40 OF 75	

www.teknisi-indonesia.com

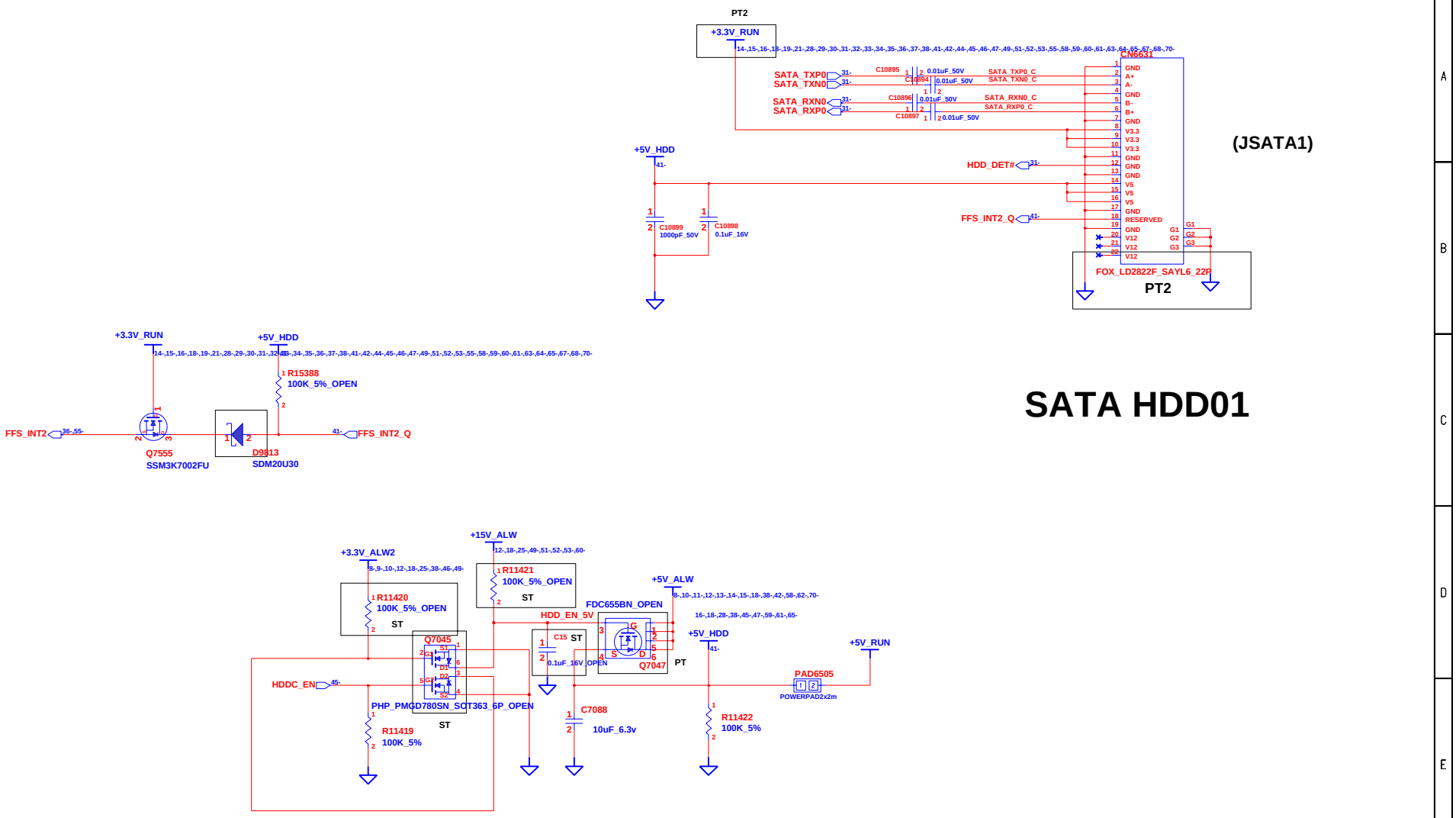

DELL CONFIDENTIAL/PROPRIETARY

PROPRITARY NOTE: THIS SHEET OF NGINEERING DRAWING AND SPECIFICATIONS CONTAINS CONFIDENTAL TRADE SECRET AND OTHER PROPTIETARY INFORMATION OF DELL INC. ("DELL") THIS DOCUMENT MAY NOT BE TRANSFERRED OR COPIED WITHOUT THE EXPRESS WRITTEN AUTHORIZATION OF DELL. IN ADDITION, NEITHER THIS SHEET NOR THE INFORMATION IT CONTAINS WAY BE USED BY OR DISCLOSED TO ANY THIRD PARTY WITHOUT DELL'S EXPRESS WRITTEN CONSENT.

INVENTEC			
TITLE VIDA SATA HDD&ODD			
SIZE A3	CODE CS	DOC. NUMBER K-CS-1310A24288-0-MTR	REV
CHANGE by		2-Jan-2012	SHEET 41 OF 75

www.teknisi-indonesia.com

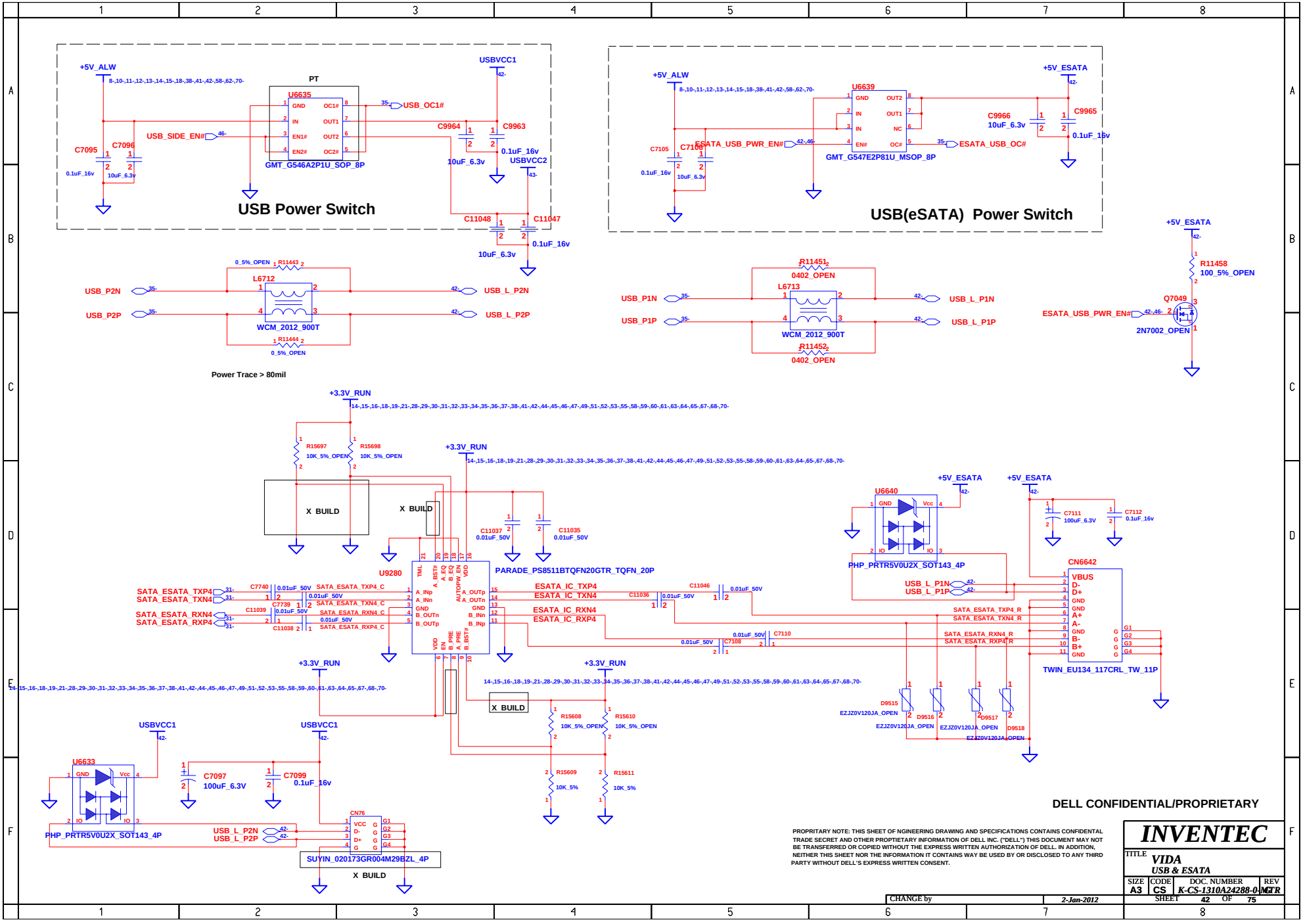

www.teknisi-indonesia.com

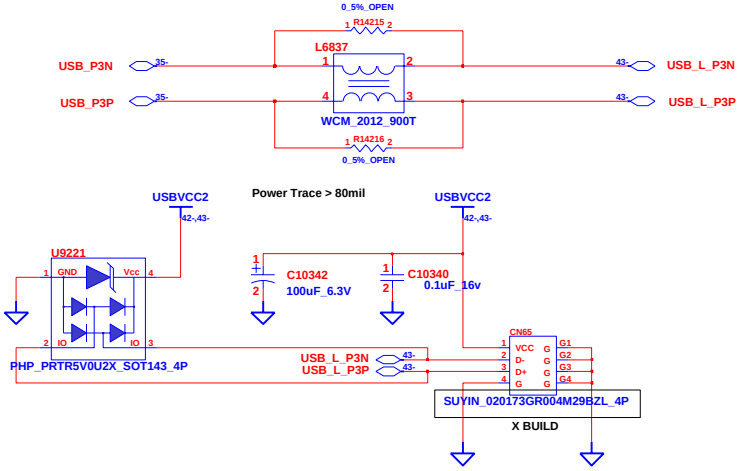

INVENTEC			
TITLE VIDA USB Conn			
SIZE A3	CODE CS	DOC. NUMBER K-CS-1310A24288-0-MTR	REV
CHANGE by	2-Jan-2012	SHEET 43 OF 75	

www.teknisi-indonesia.com

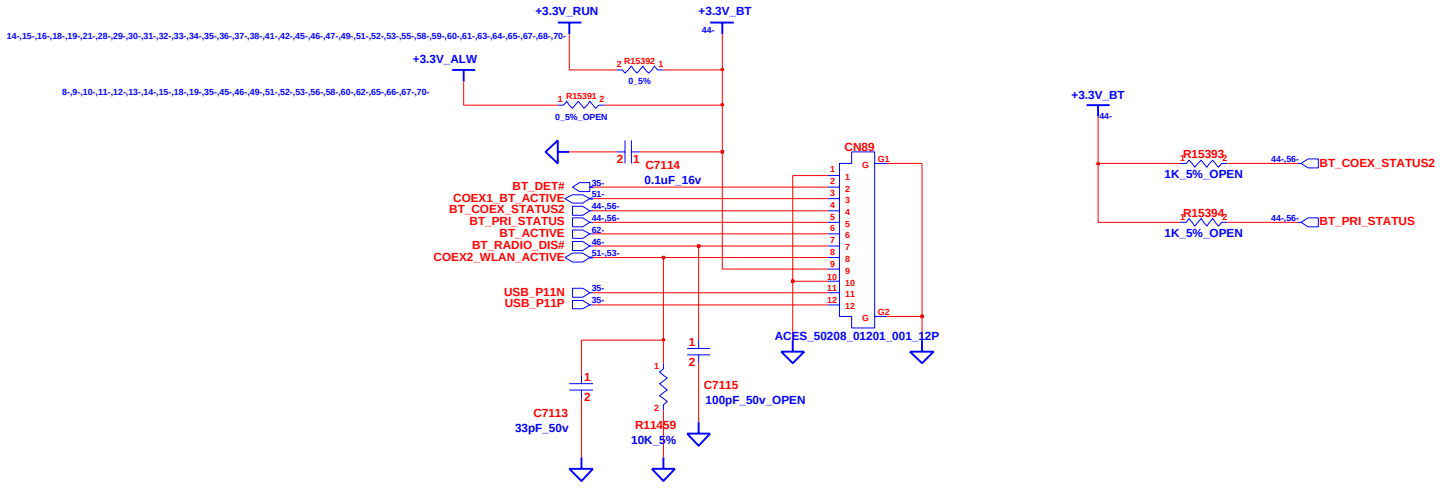

CHANGE by		2-Jan-2012	

INVENTEC

TITLE *VIDA BT*

SIZE	CODE	DOC. NUMBER	REV
A3	CS	K-CS-1310A24288-0-MTR	

SHEET 44 OF 75

www.teknisi-indonesia.com

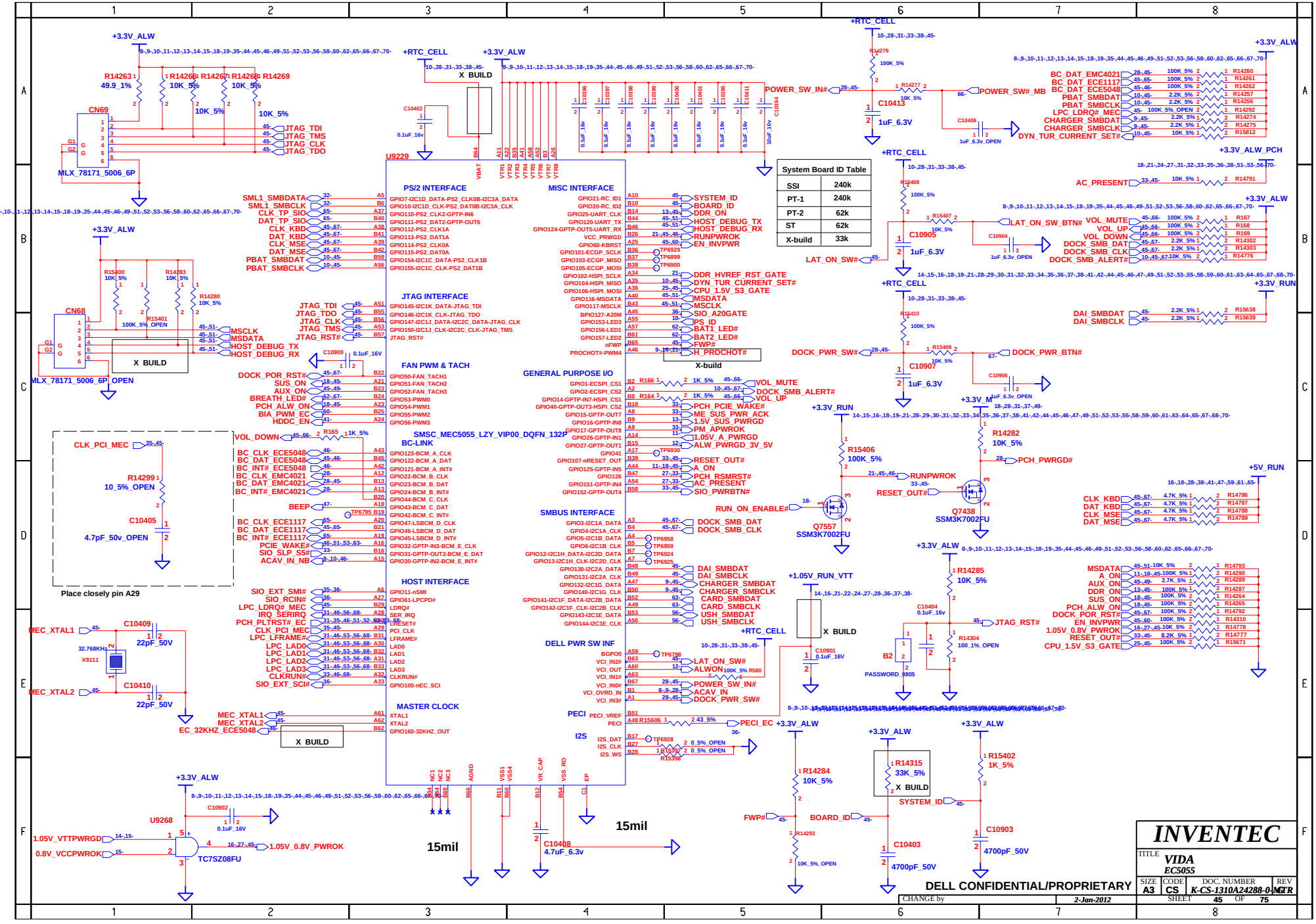

www.teknisi-indonesia.com

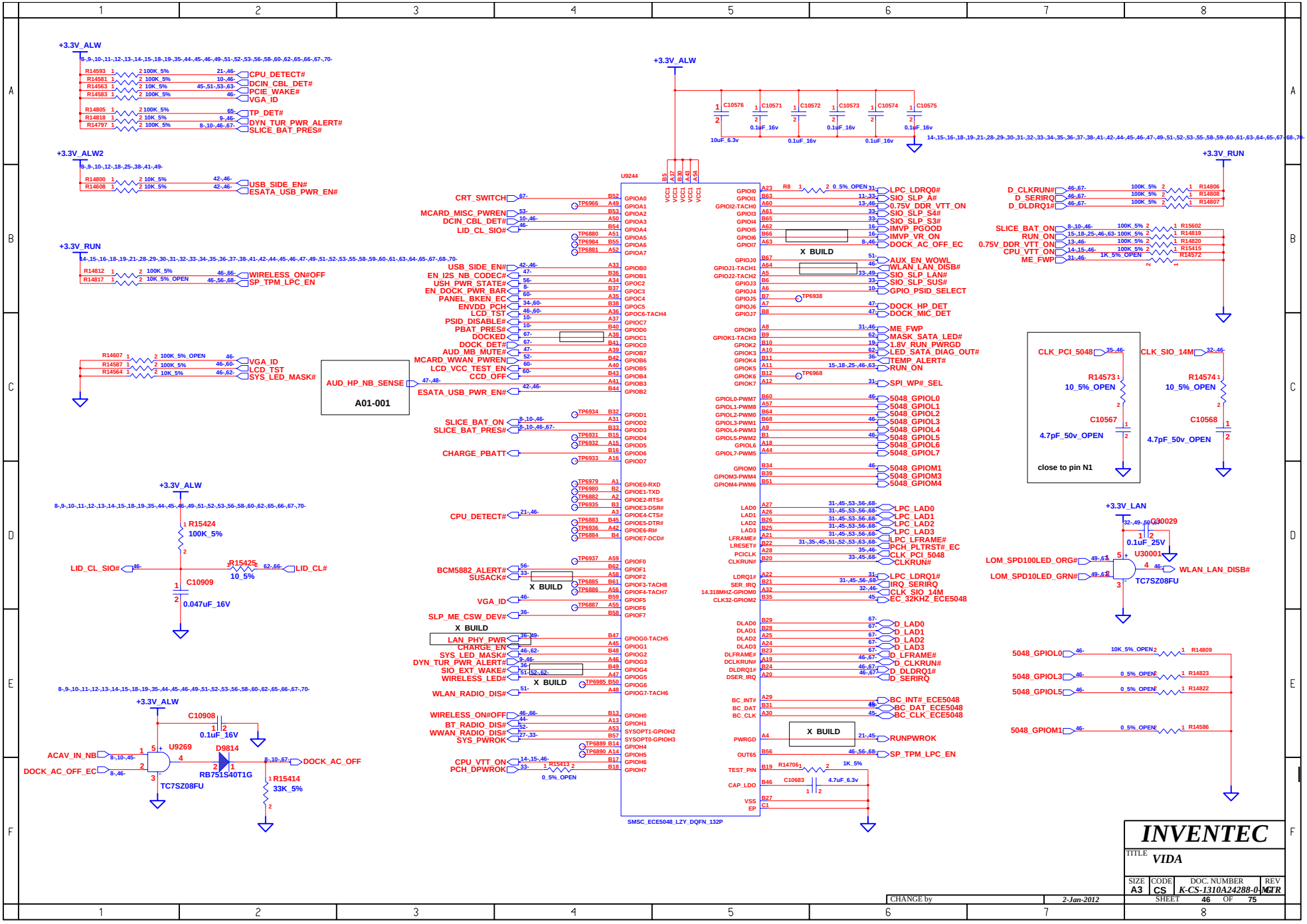

www.teknisi-indonesia.com

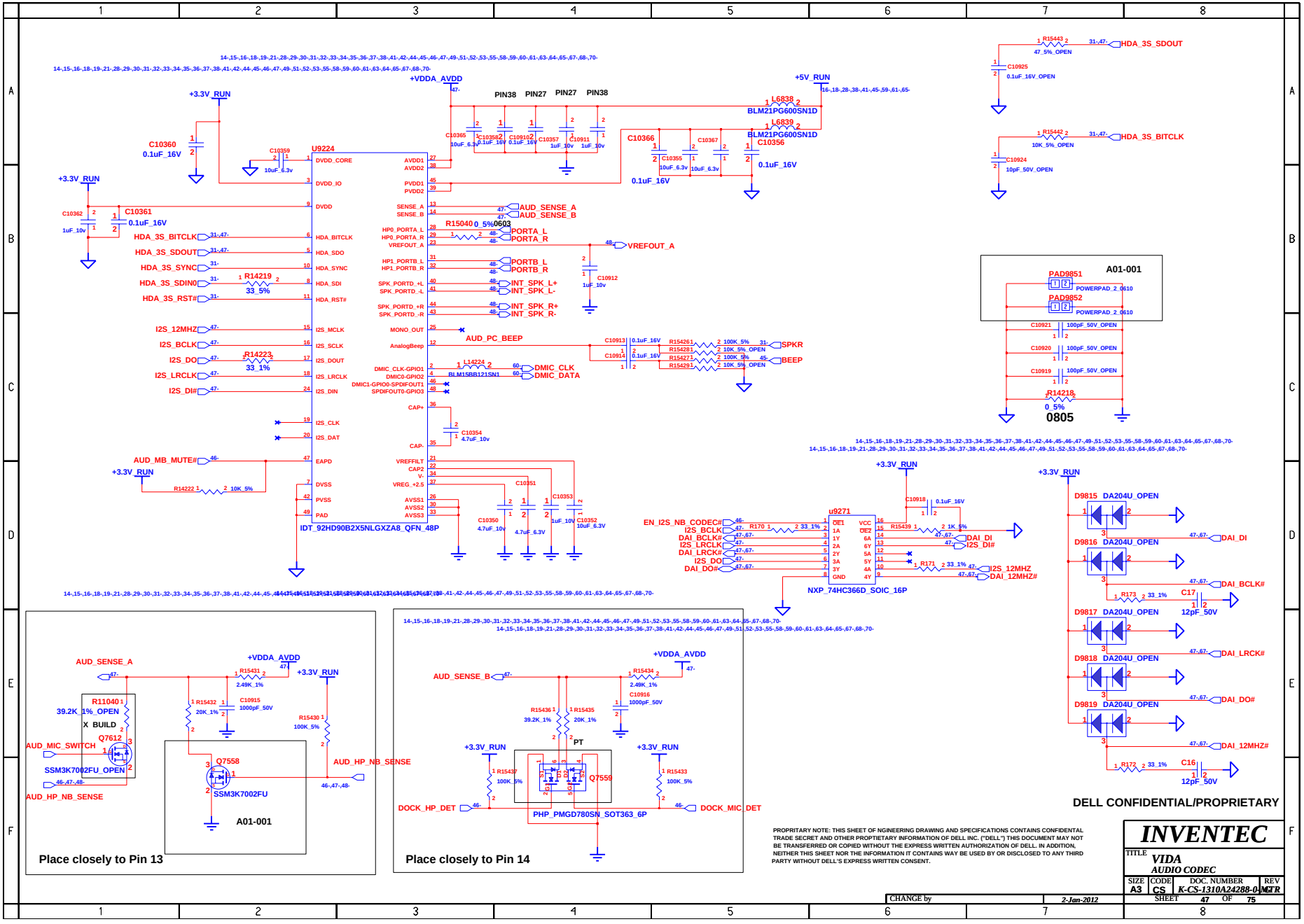

DELL CONFIDENTIAL/PROPRIETARY

PROPRIETARY NOTE: THIS SHEET OF NGINEERING DRAWING AND SPECIFICATIONS CONTAINS CONFIDENTAL TRADE SECRET AND OTHER PROPTIETARY INFORMATION OF DELL INC. ("DELL") THIS DOCUMENT MAY NOT BE TRANSFERRED OR COPIED WITHOUT THE EXPRESS WRITTEN AUTHORIZATION OF DELL. IN ADDITION, NEITHER THIS SHEET NOR THE INFORMATION IT CONTAINS WAY BE USED BY OR DISCLOSED TO ANY THIRD PARTY WITHOUT DELL'S EXPRESS WRITTEN CONSENT.

INVENTEC

TITLE	VIDA AUDIO CODEC		
SIZE A3	CODE CS	DOC. NUMBER K-CS-1310A24288-0-MTR	REV
CHANGE by		2-Jan-2012	SHEET 47 OF 75

www.teknisi-indonesia.com

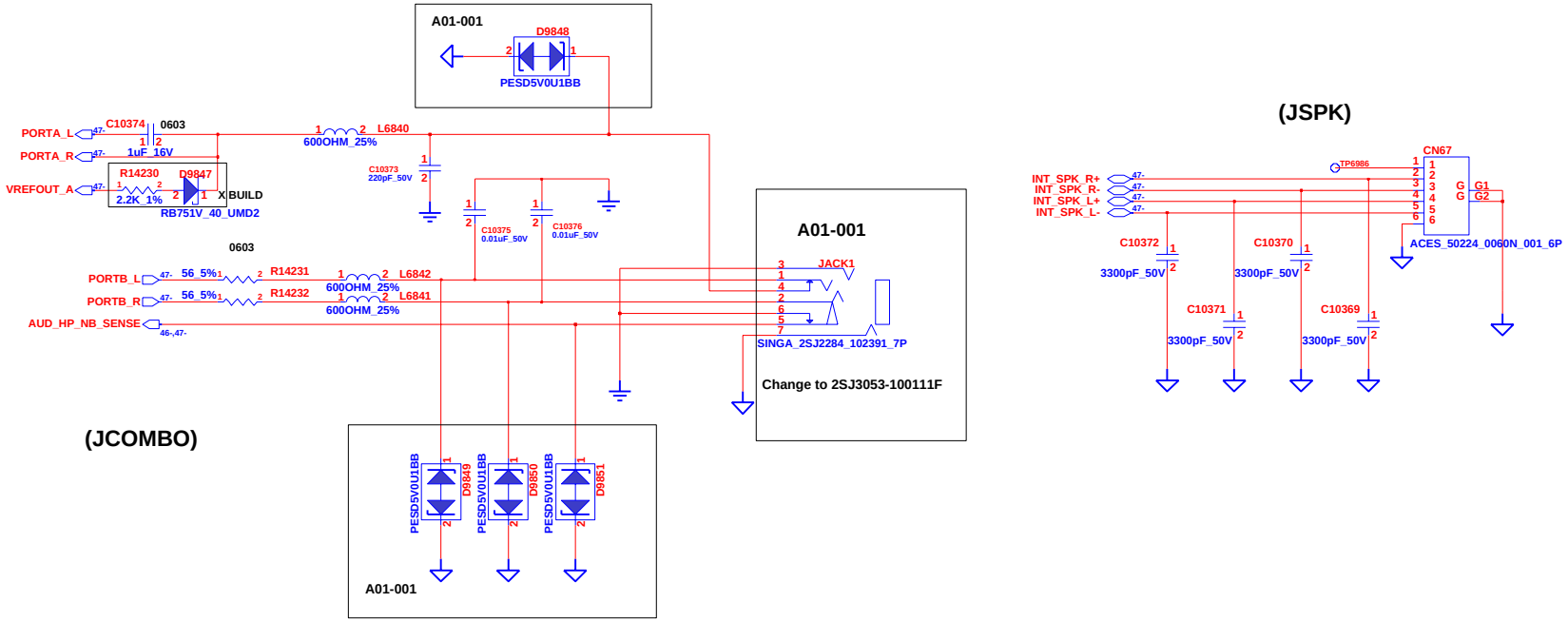

(JSPK)

INVENTEC			
TITLE VIDA MDC/Speaker/Combo JACK			
SIZE A3	CODE CS	DOC. NUMBER K-CS-1310A24288-0-MTR	REV
CHANGE by	2-Jan-2012	SHEET 48 OF 75	

www.teknisi-indonesia.com

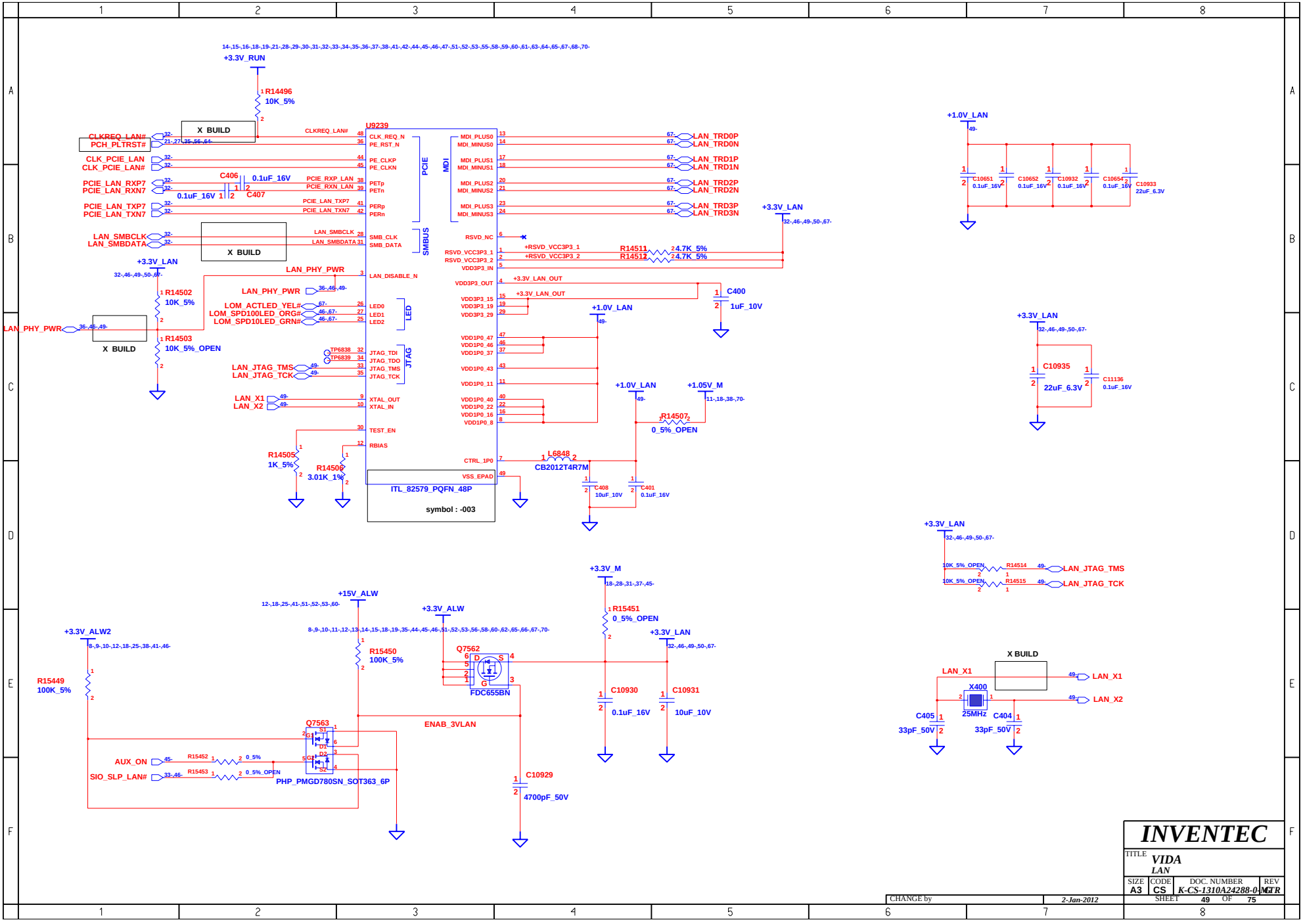

INVENTEC			
TITLE VIDA LAN			
SIZE A3	CODE CS	DOC. NUMBER K-CS-1310A24288-0-MTR	REV
CHANGE by	2-Jan-2012	SHEET 49 OF 75	

www.teknisi-indonesia.com

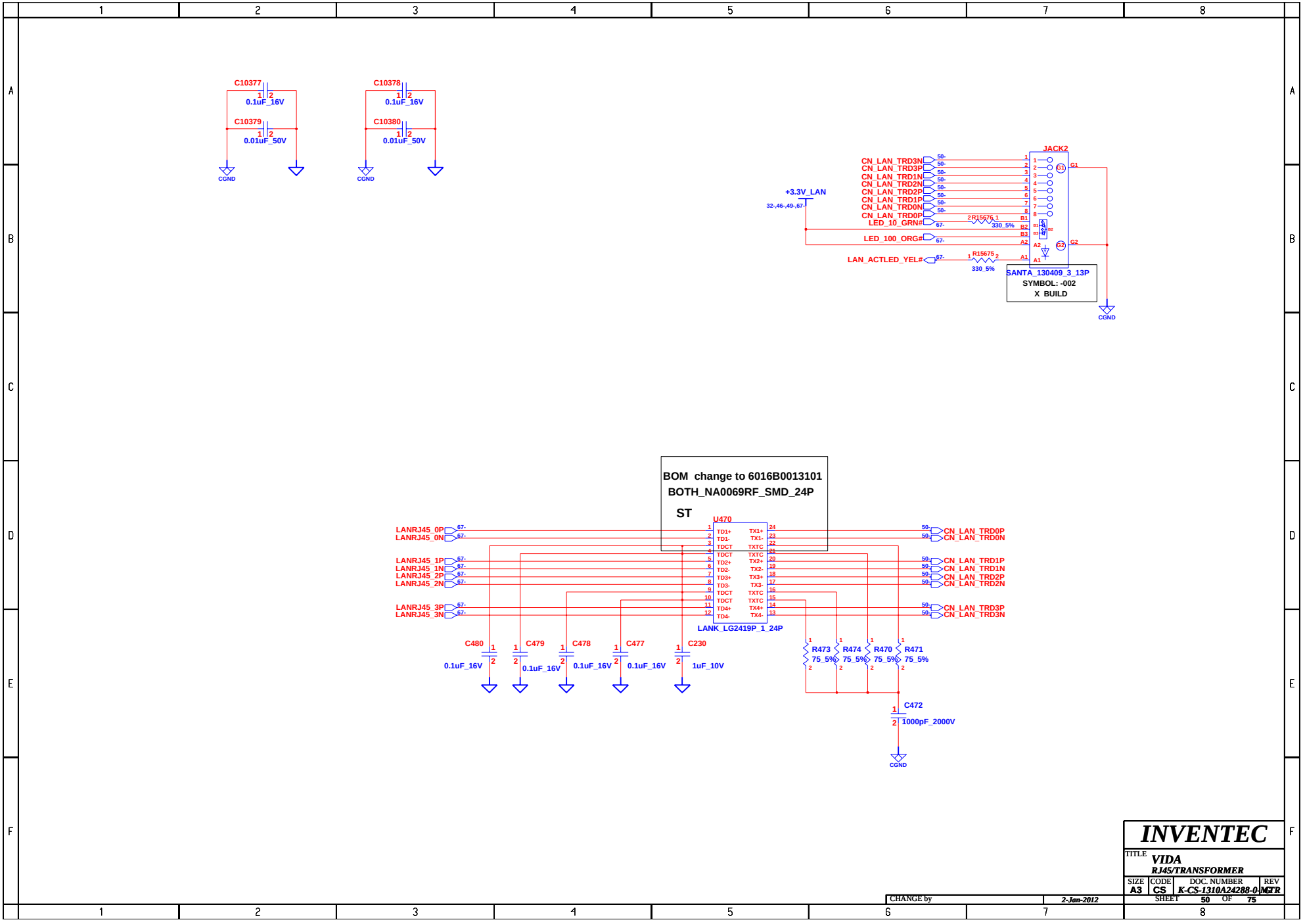

INVENTEC			
TITLE VIDA RJ45/TRANSFORMER			
SIZE A3	CODE CS	DOC. NUMBER K-CS-1310A24288-0-MTR	REV
CHANGE by		2-Jan-2012	SHEET 50 OF 75

www.teknisi-indonesia.com

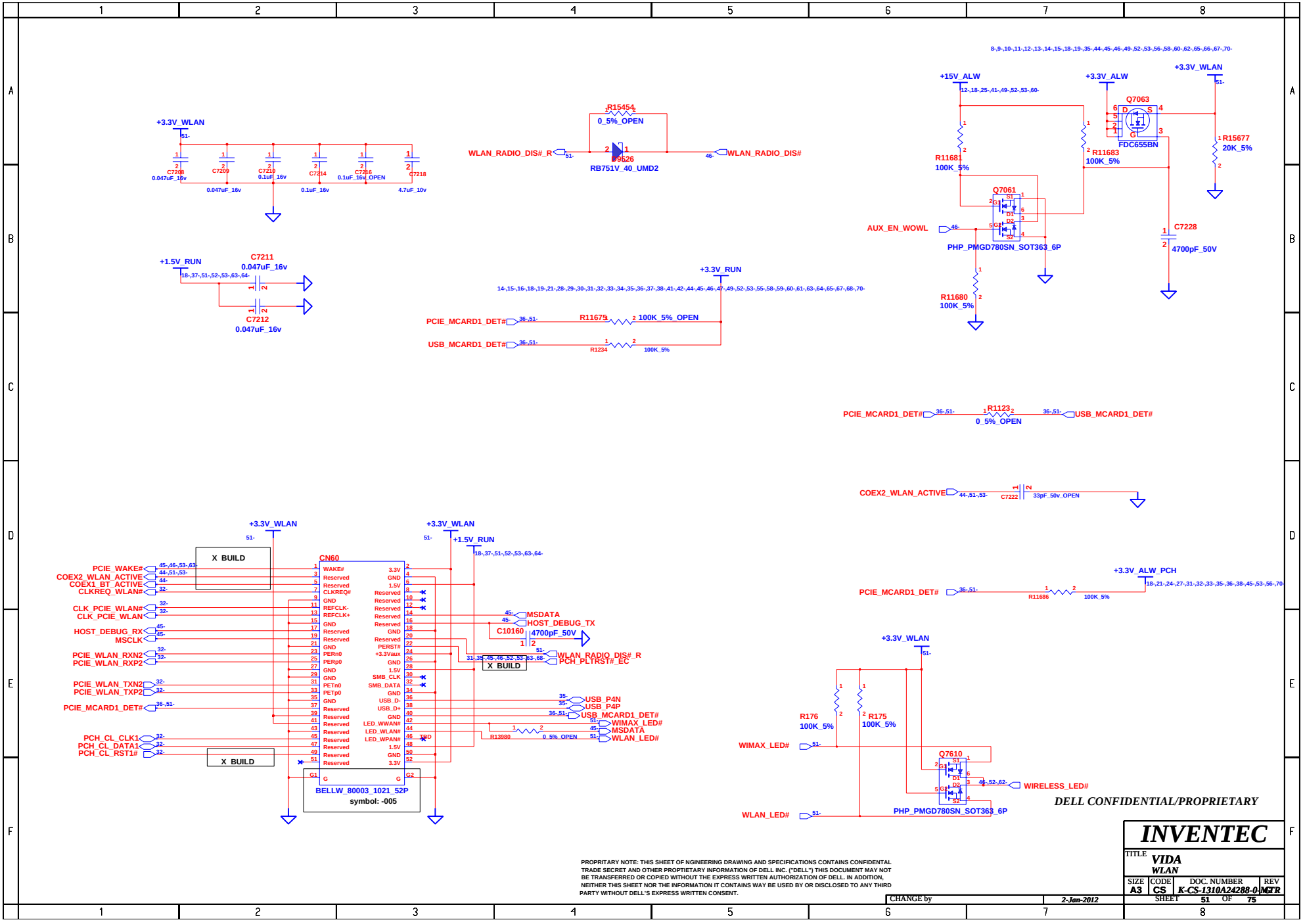

www.teknisi-indonesia.com

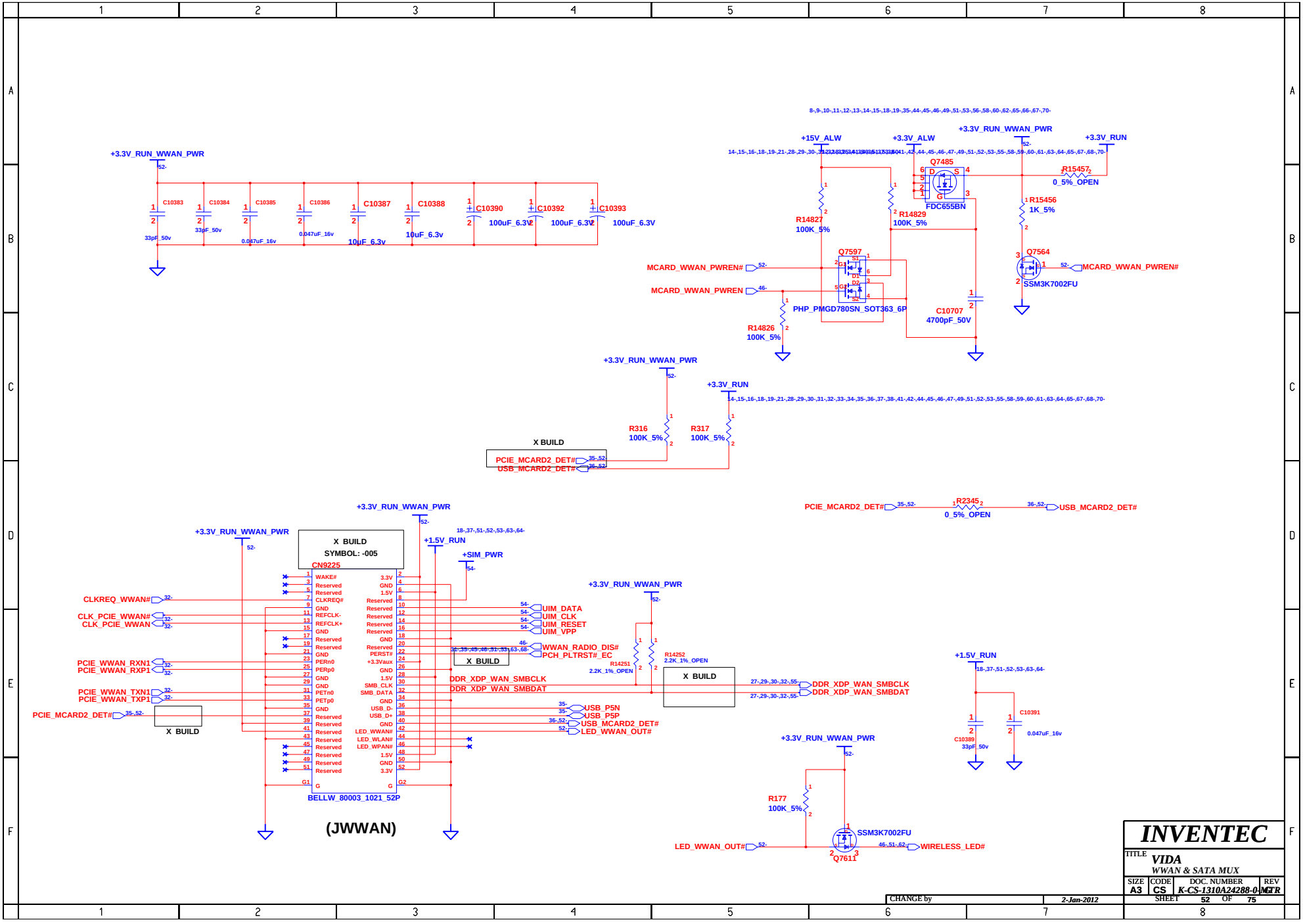

www.teknisi-indonesia.com

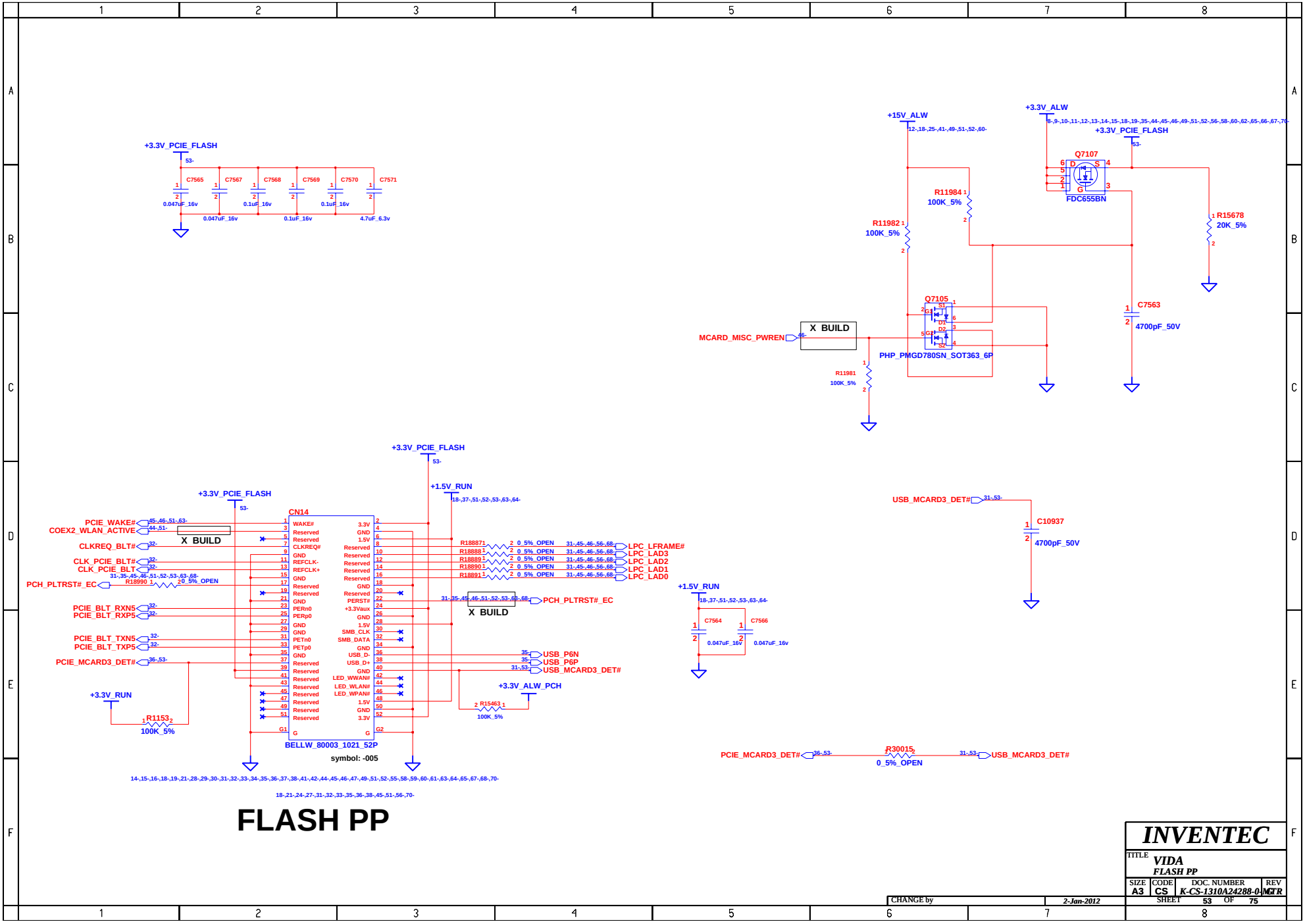

www.teknisi-indonesia.com

SIM Card

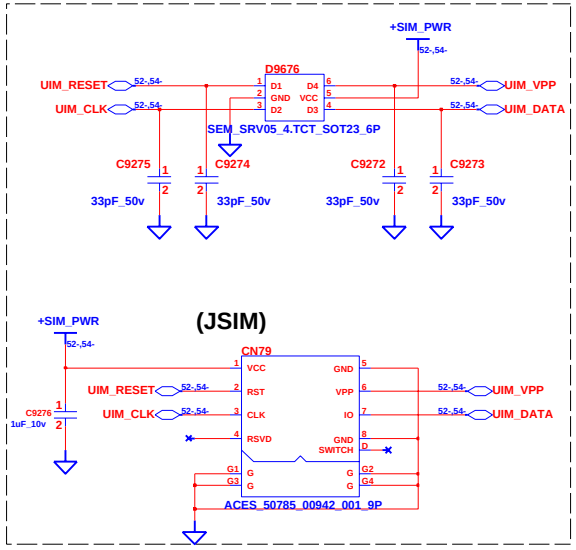

INVENTEC			
TITLE VIDA SIM CARD			
SIZE A3	CODE CS	DOC. NUMBER K-CS-1310A24288-0-MTR	REV
CHANGE by	2-Jan-2012	SHEET 54 OF 75	

www.teknisi-indonesia.com

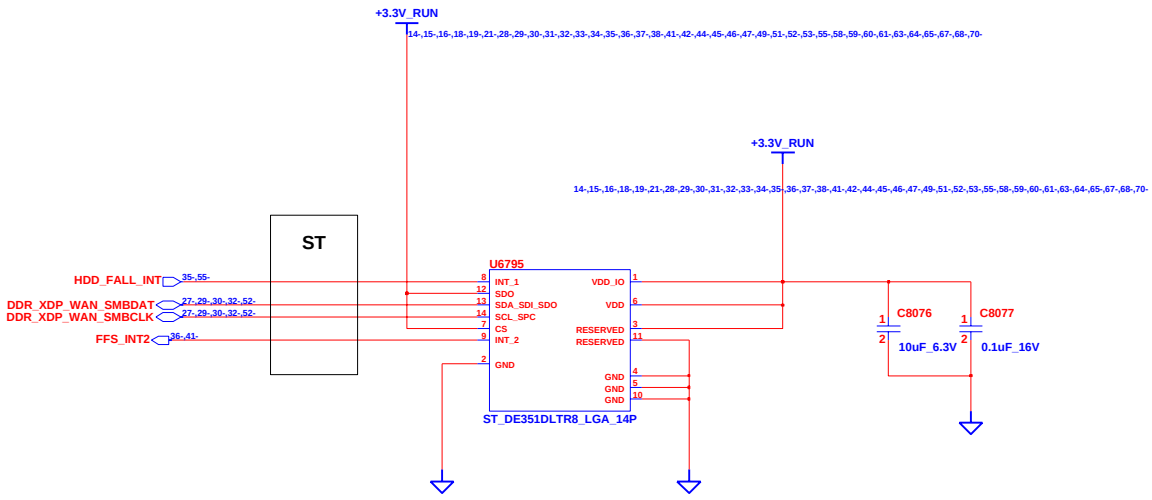

G SENSOR

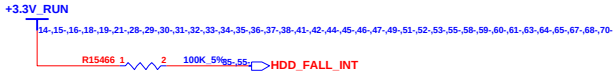

INVENTEC			
TITLE VIDA G SENSOR			
SIZE A3	CODE CS	DOC. NUMBER K-CS-1310A24288-0-MTR	REV
CHANGE by		2-Jan-2012	SHEET 55 OF 75

www.teknisi-indonesia.com

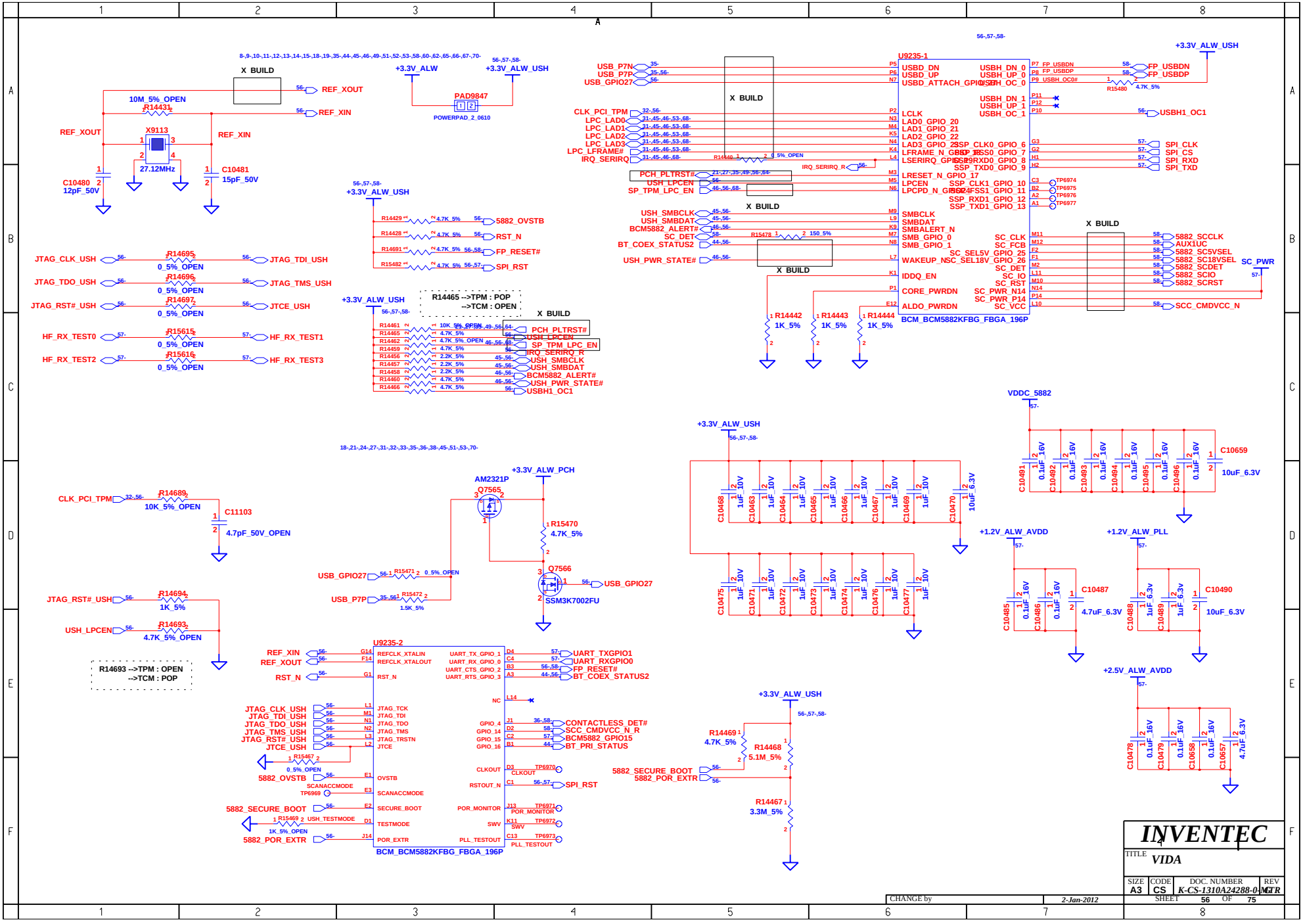

www.teknisi-indonesia.com

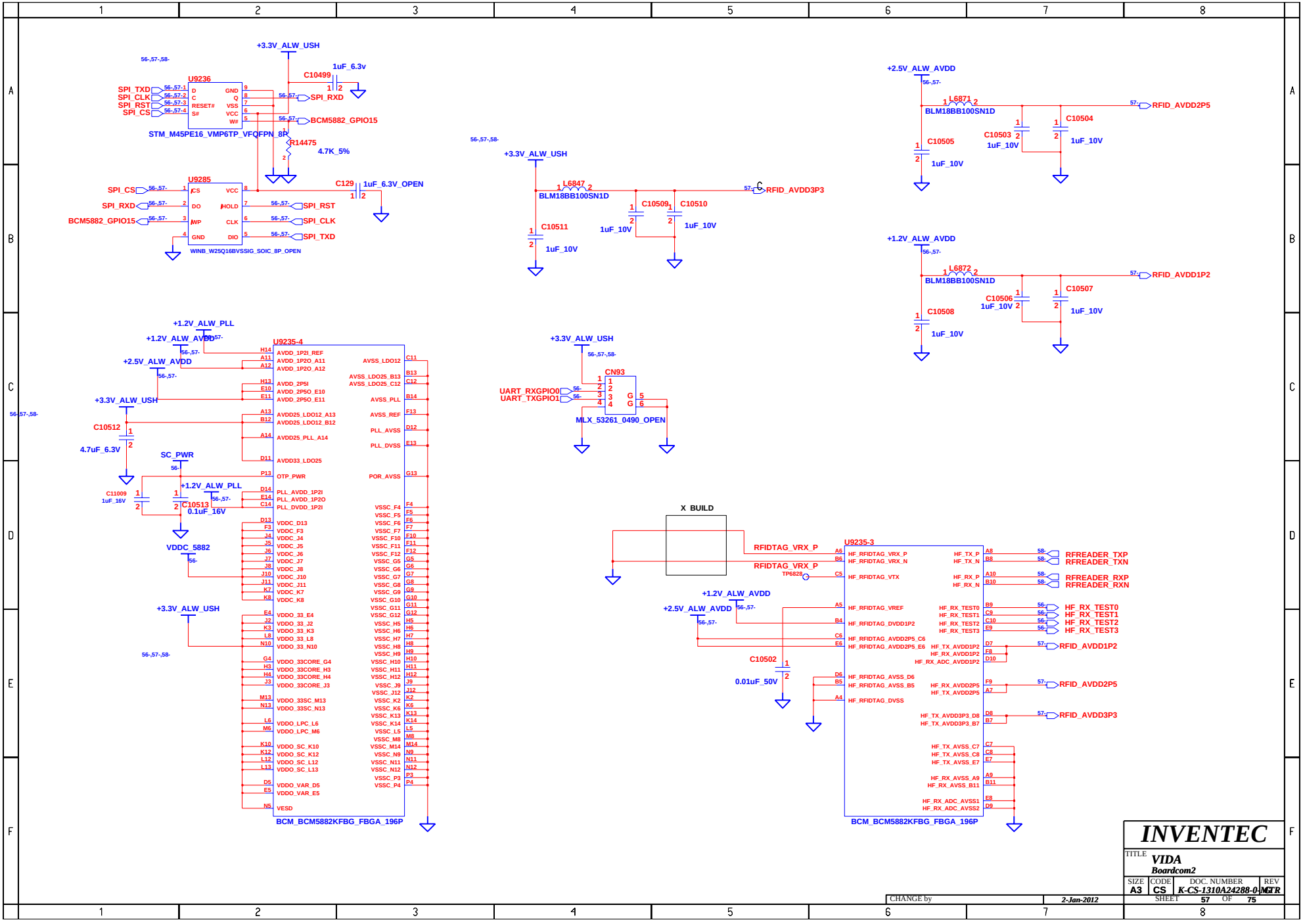

www.teknisi-indonesia.com

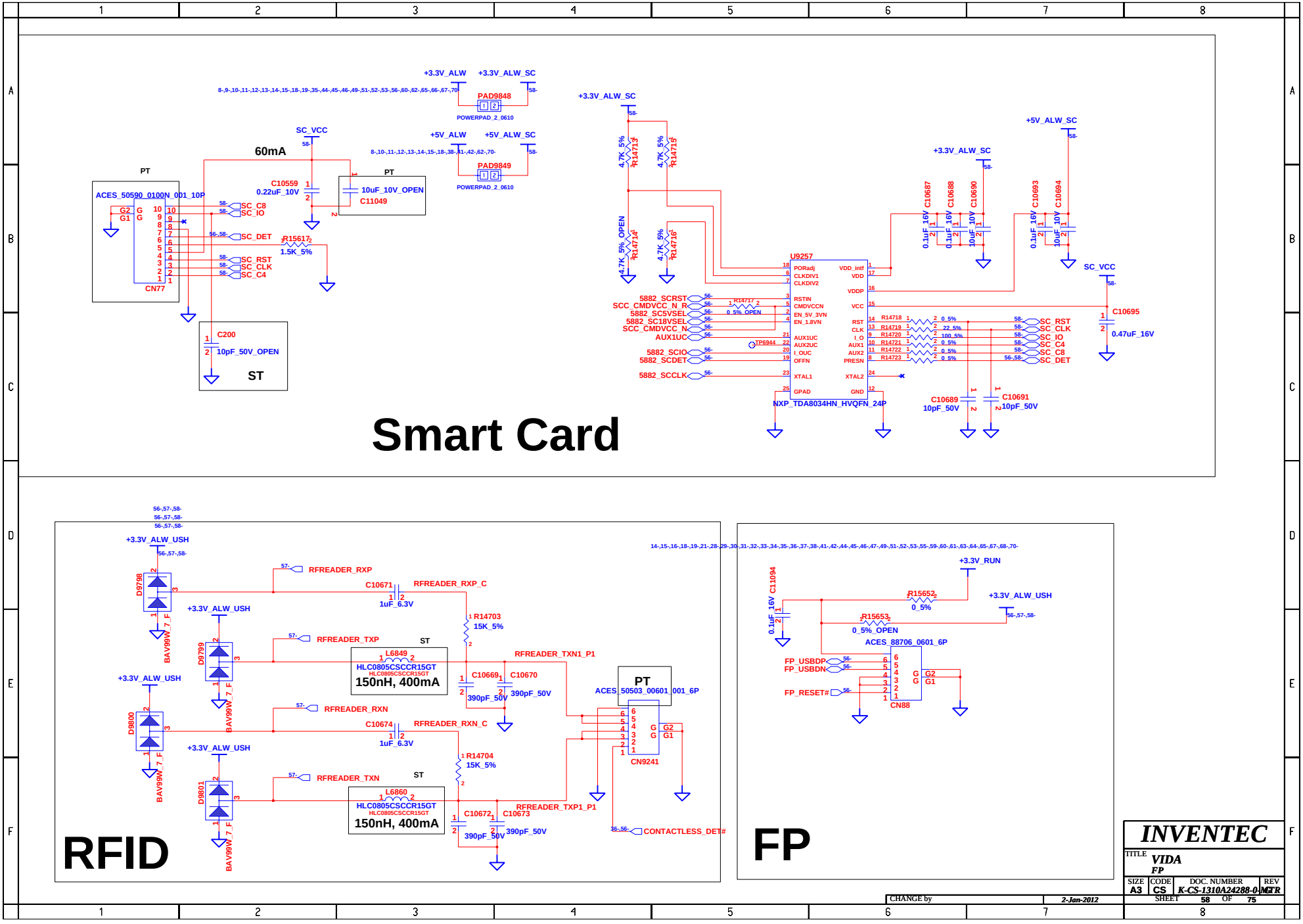

www.teknisi-indonesia.com

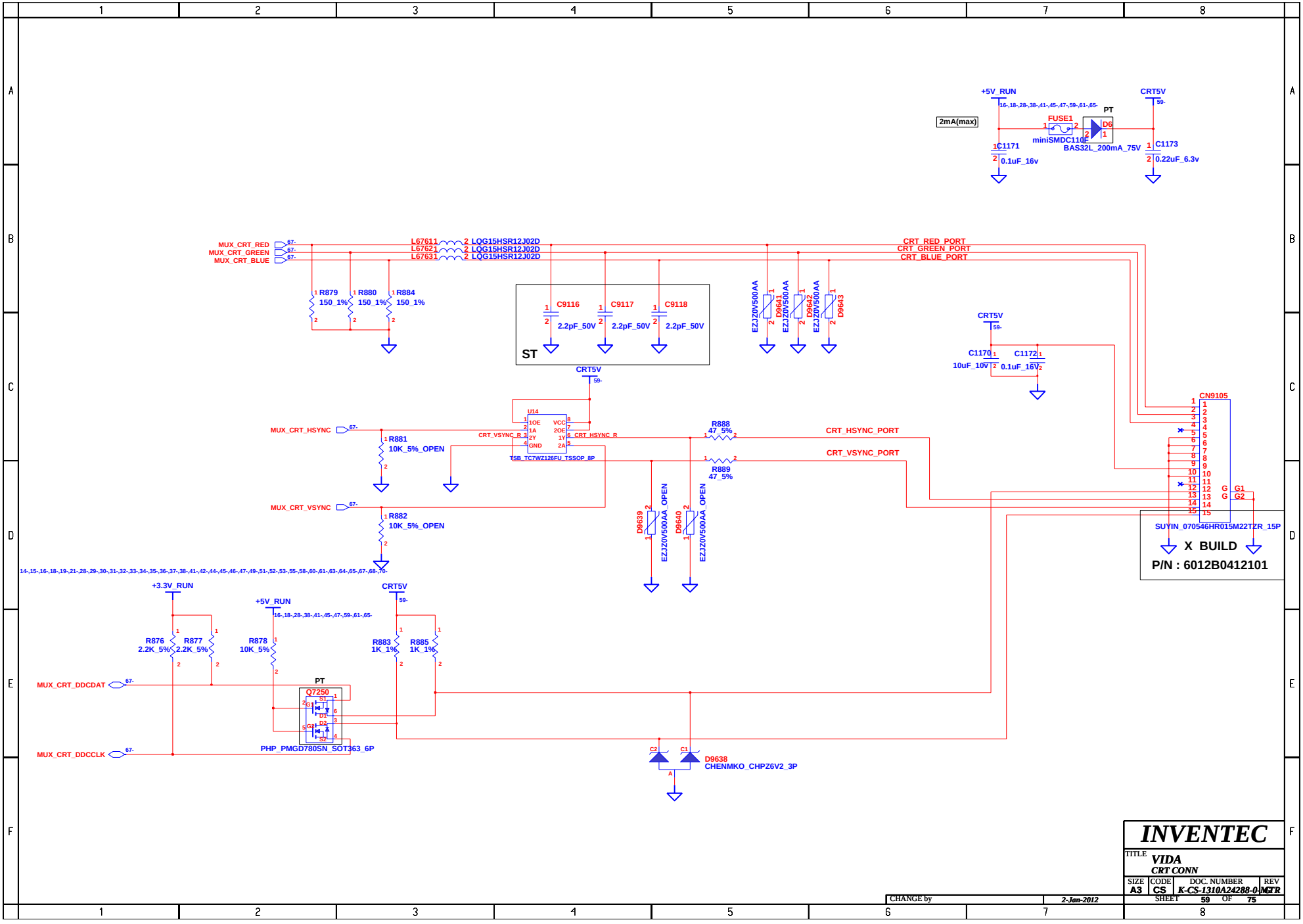

www.teknisi-indonesia.com

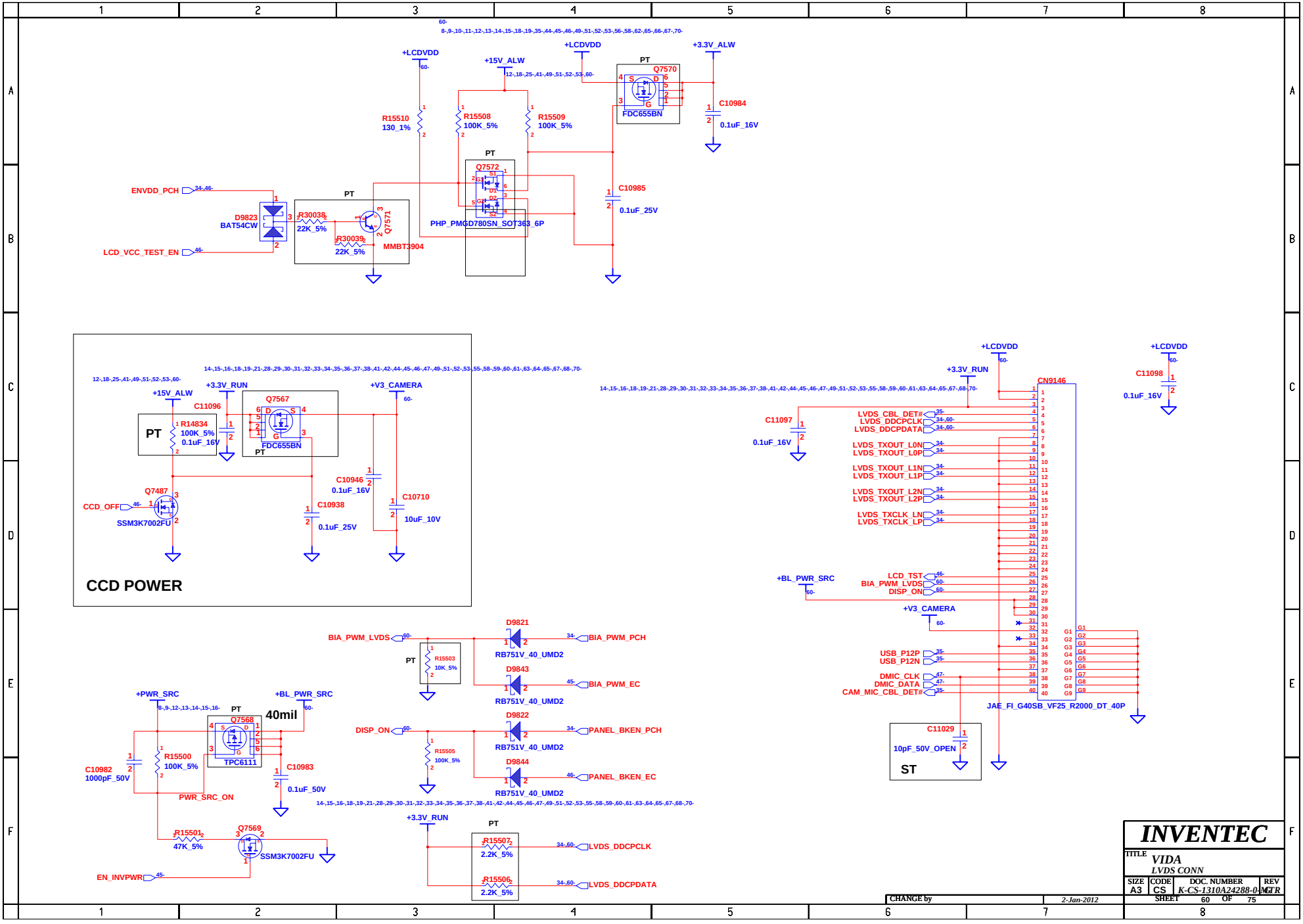

www.teknisi-indonesia.com

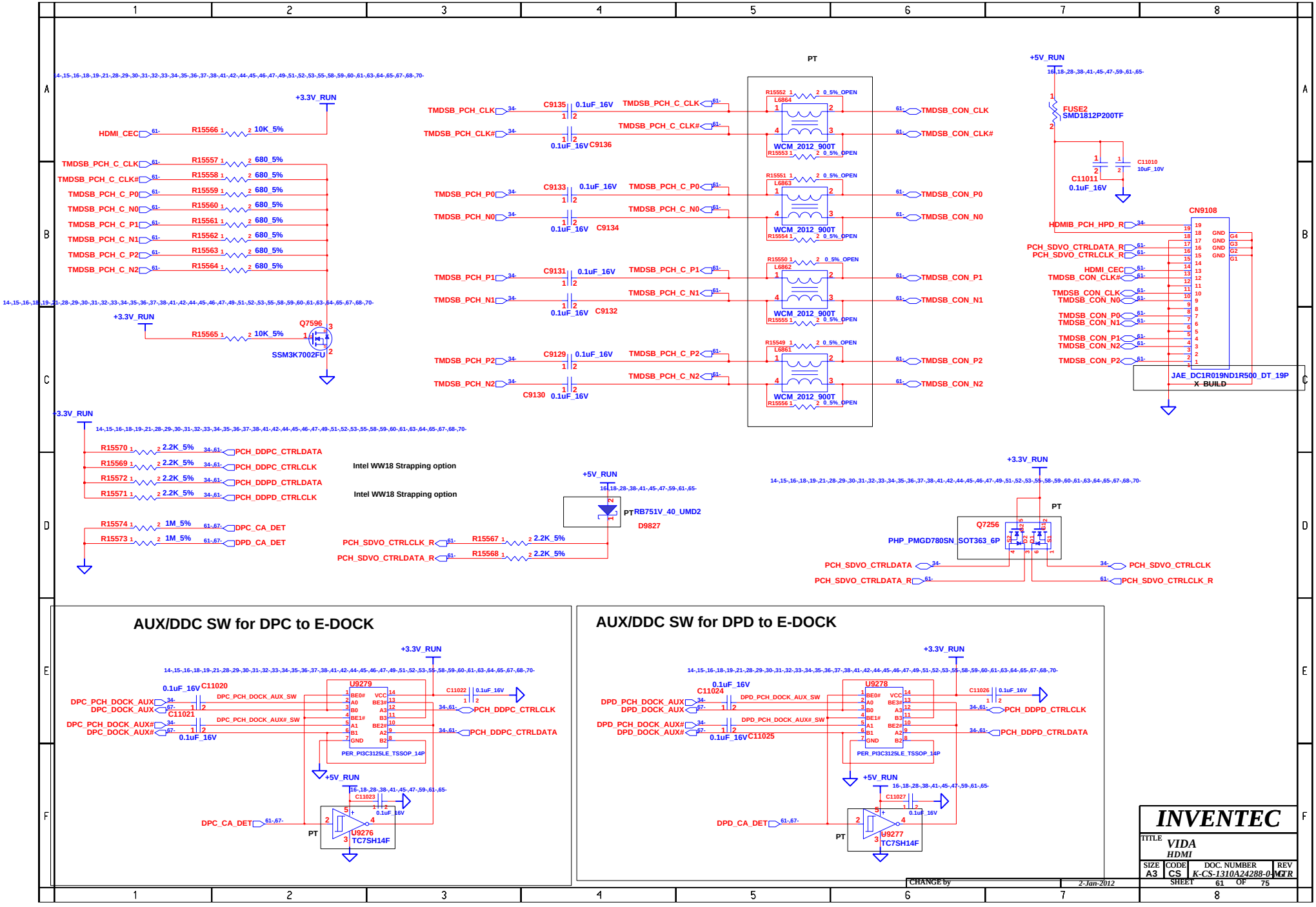

www.teknisi-indonesia.com

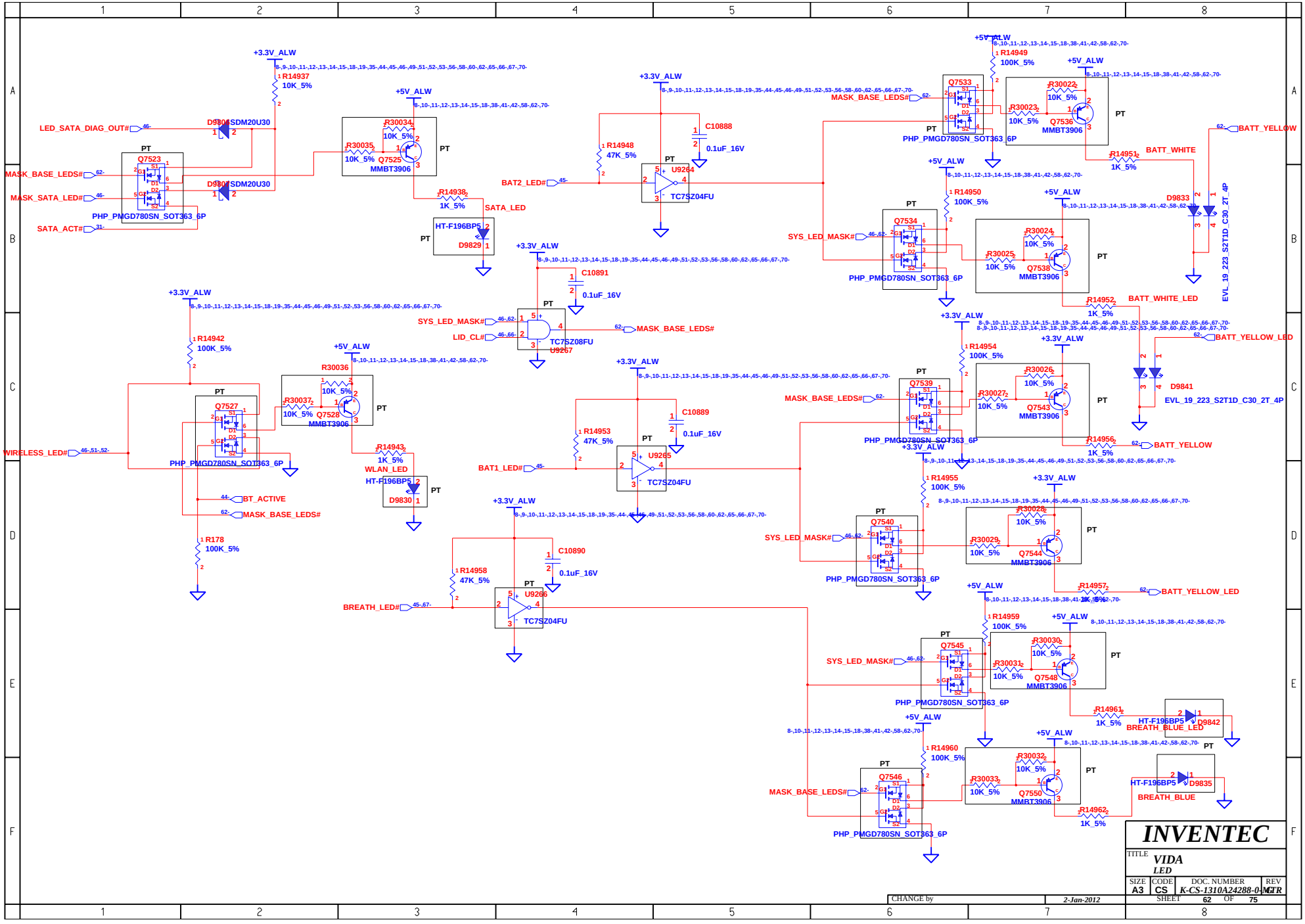

www.teknisi-indonesia.com

EXPRESS CARD

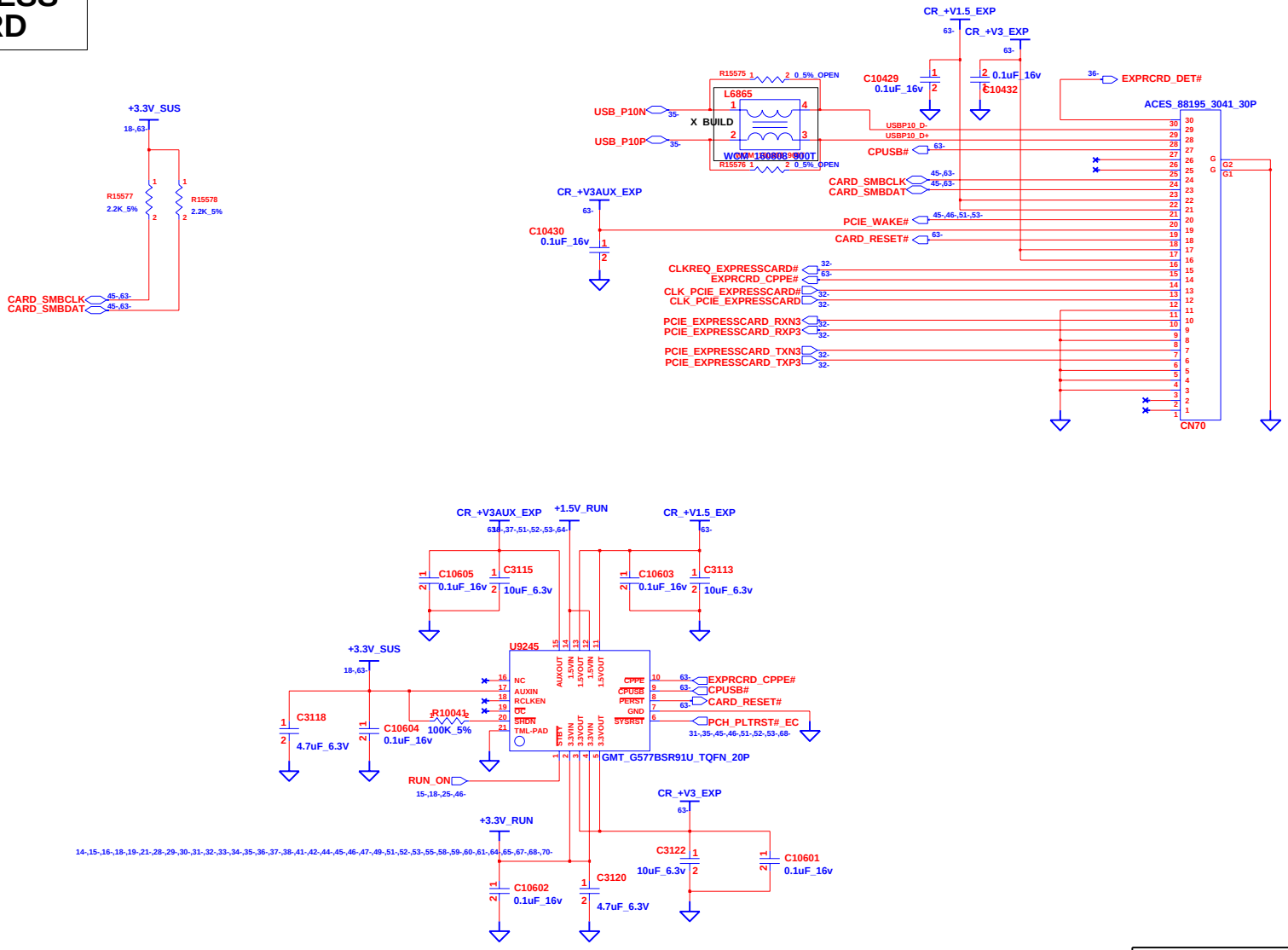

INVENTEC			
TITLE: VIDA 5138 CARD READER			
SIZE: A3	CODE: CS	DOC. NUMBER: K-CS-1310A24288-0-MTR	REV: 1
CHANGE by	2-Jan-2012	SHEET 63 OF 75	

www.teknisi-indonesia.com

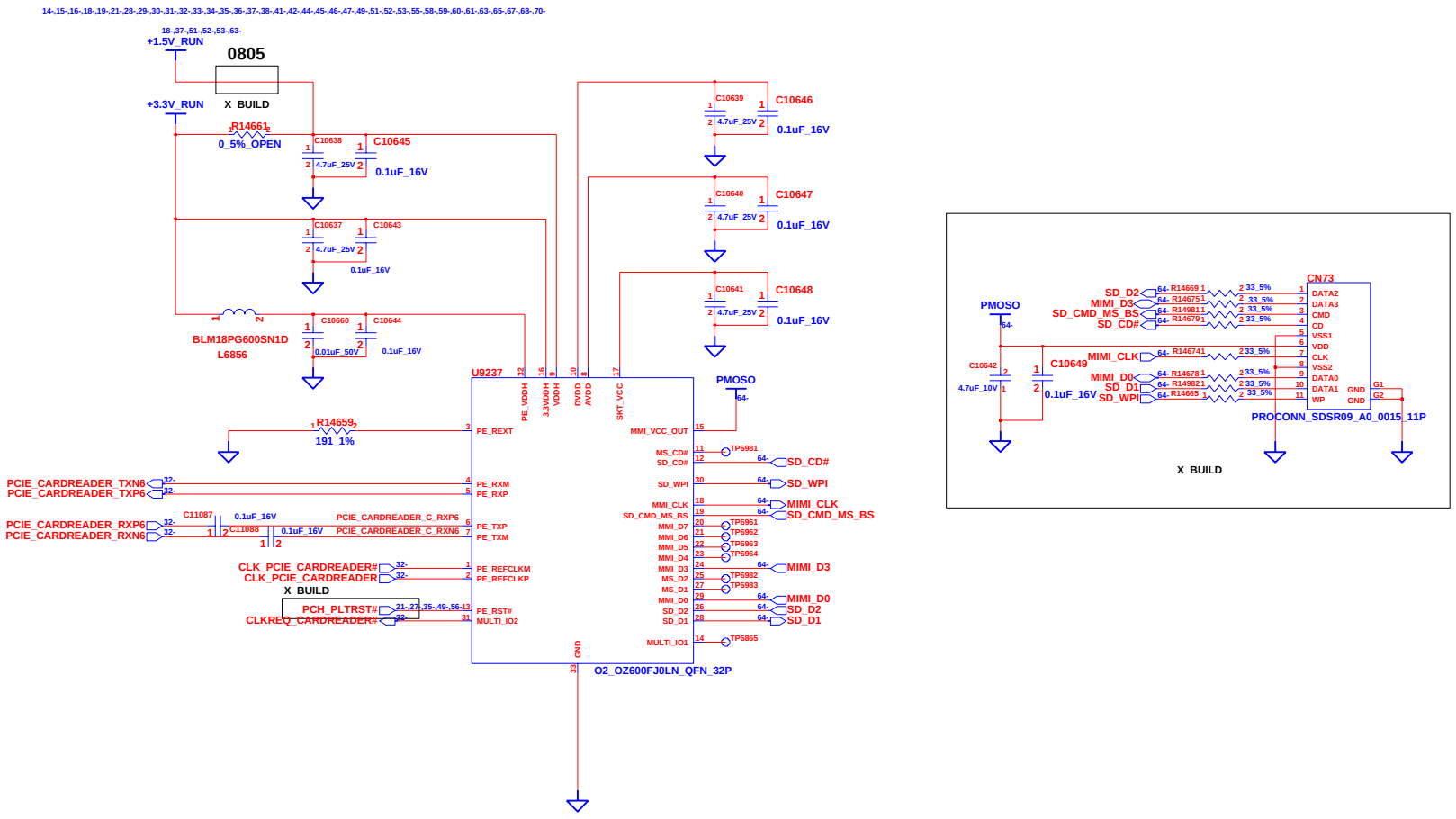

INVENTEC			
TITLE VIDA CARD READER			
SIZE A3	CODE CS	DOC. NUMBER K-CS-1310A24288-0-MTR	REV 1
CHANGE by	2-Jan-2012	SHEET 64 OF 75	

www.teknisi-indonesia.com

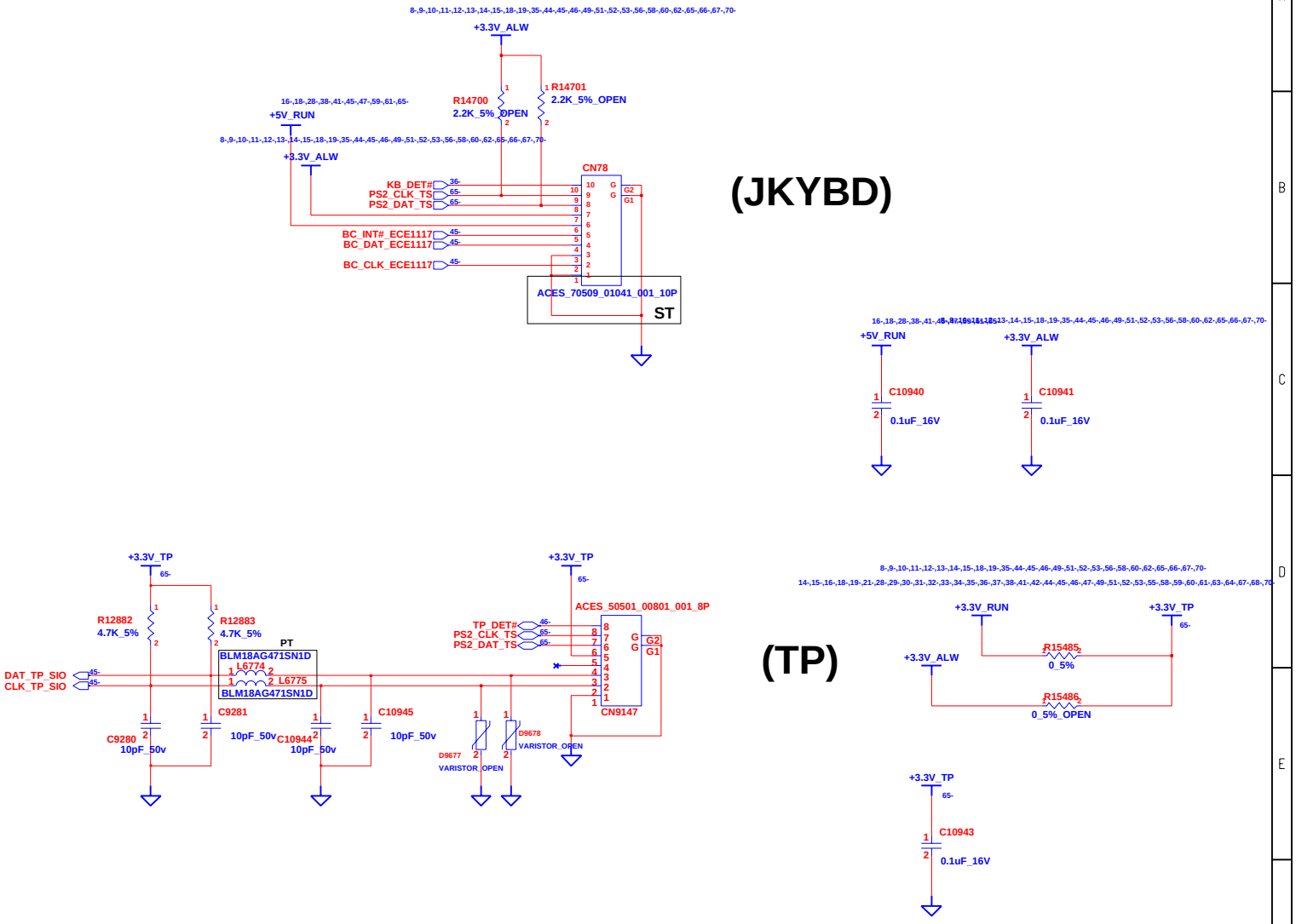

INVENTEC

TITLE VIDA
KB CONN

SIZE	CODE	DOC. NUMBER	REV
A3	CS	K-CS-1310A24288-0-MTR	1

CHANGE by 2-Jan-2012 SHEET 65 OF 75

www.teknisi-indonesia.com

Hall Sensor

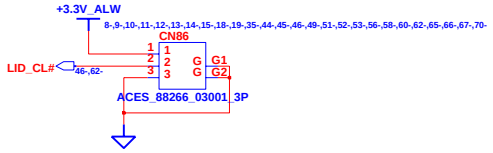

Power Switch

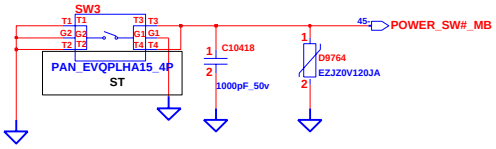

WLAN SWITCH

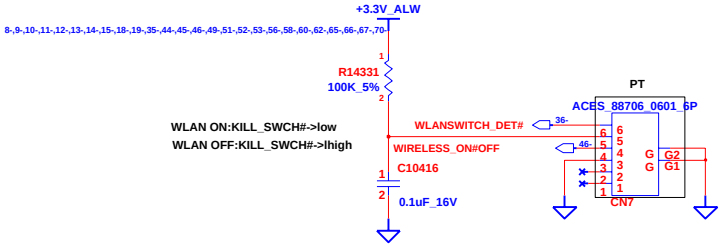

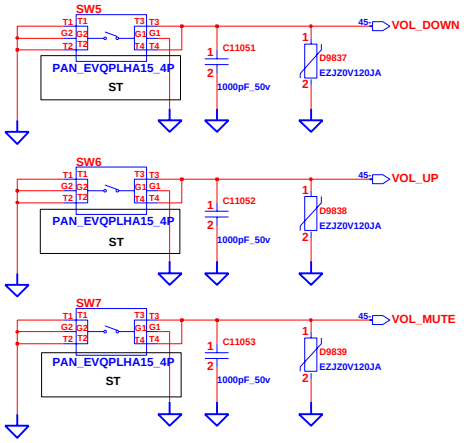

INVENTEC

TITLE *VIDA*

POWER Button/RF Switch/HALL Sensor

SIZE	CODE	DOC. NUMBER	REV
A3	CS	K-CS-1310A24288-0-MTR	1

CHANGE by | 2-Jan-2012 | SHEET 66 OF 75

www.teknisi-indonesia.com

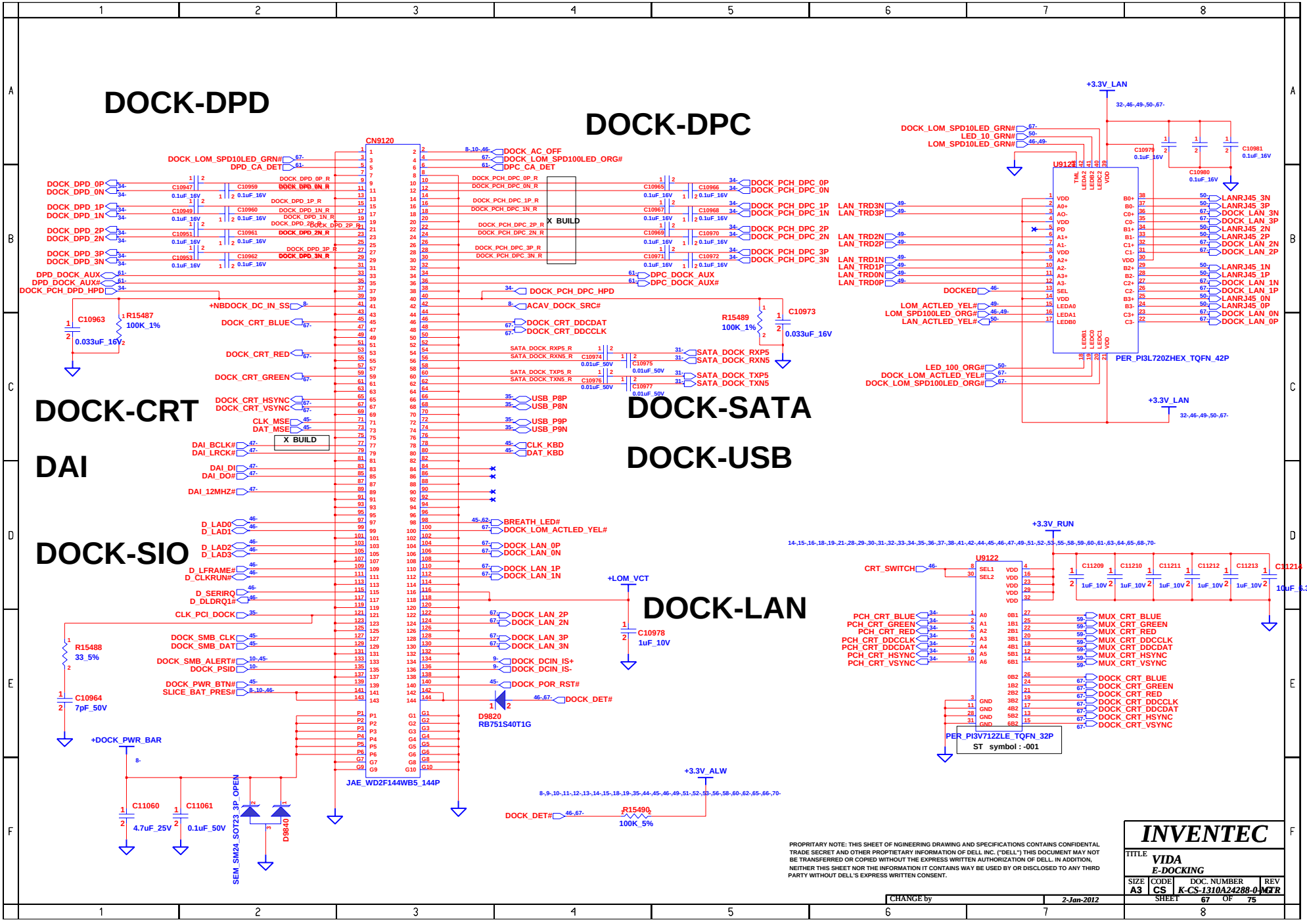

www.teknisi-indonesia.com

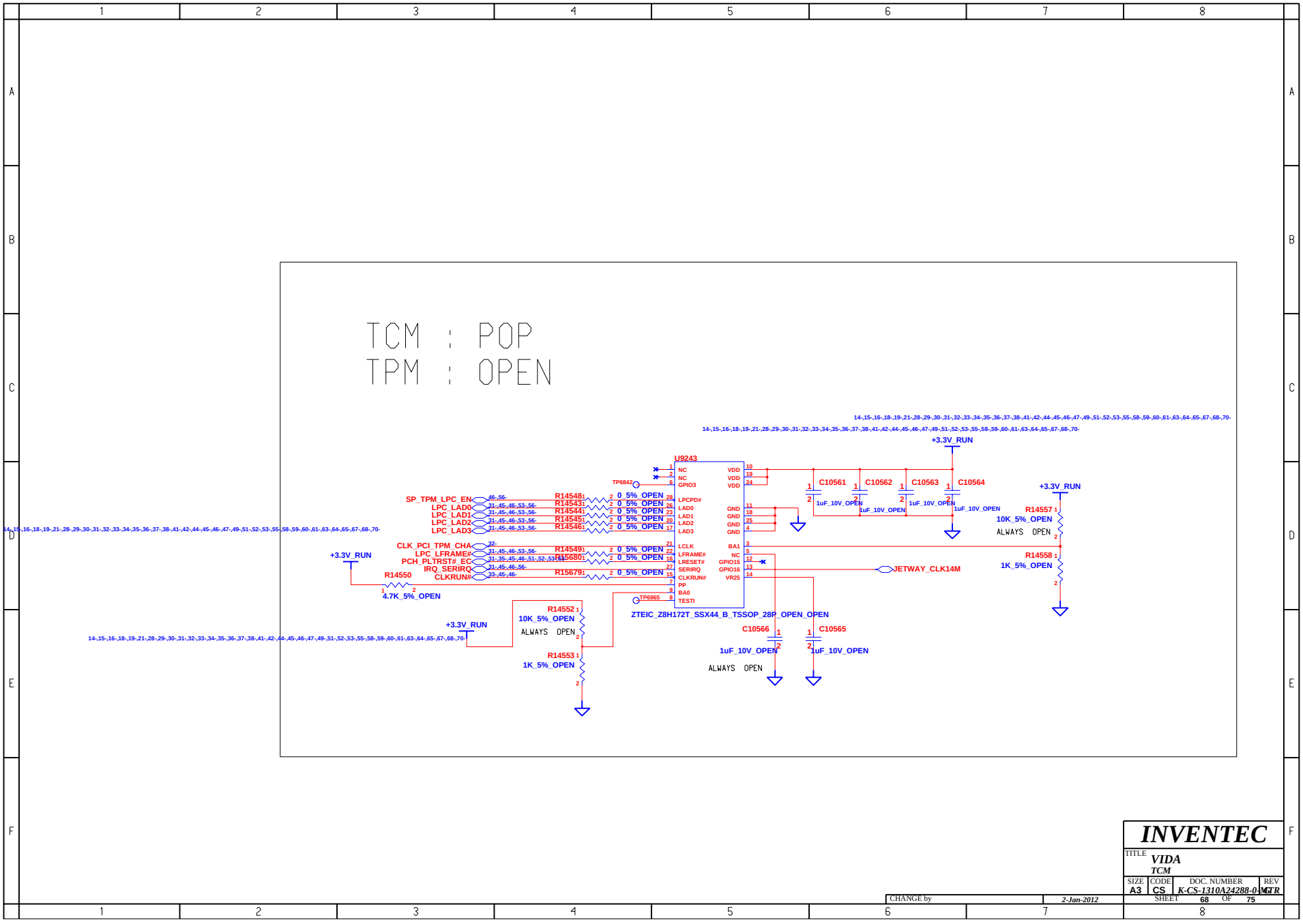

INVENTEC			
TITLE VIDA TCM			
SIZE A3	CODE CS	DOC. NUMBER K-CS-1310A24288-0-MTR	REV
CHANGE by	2-Jan-2012	SHEET 68 OF 75	

www.teknisi-indonesia.com

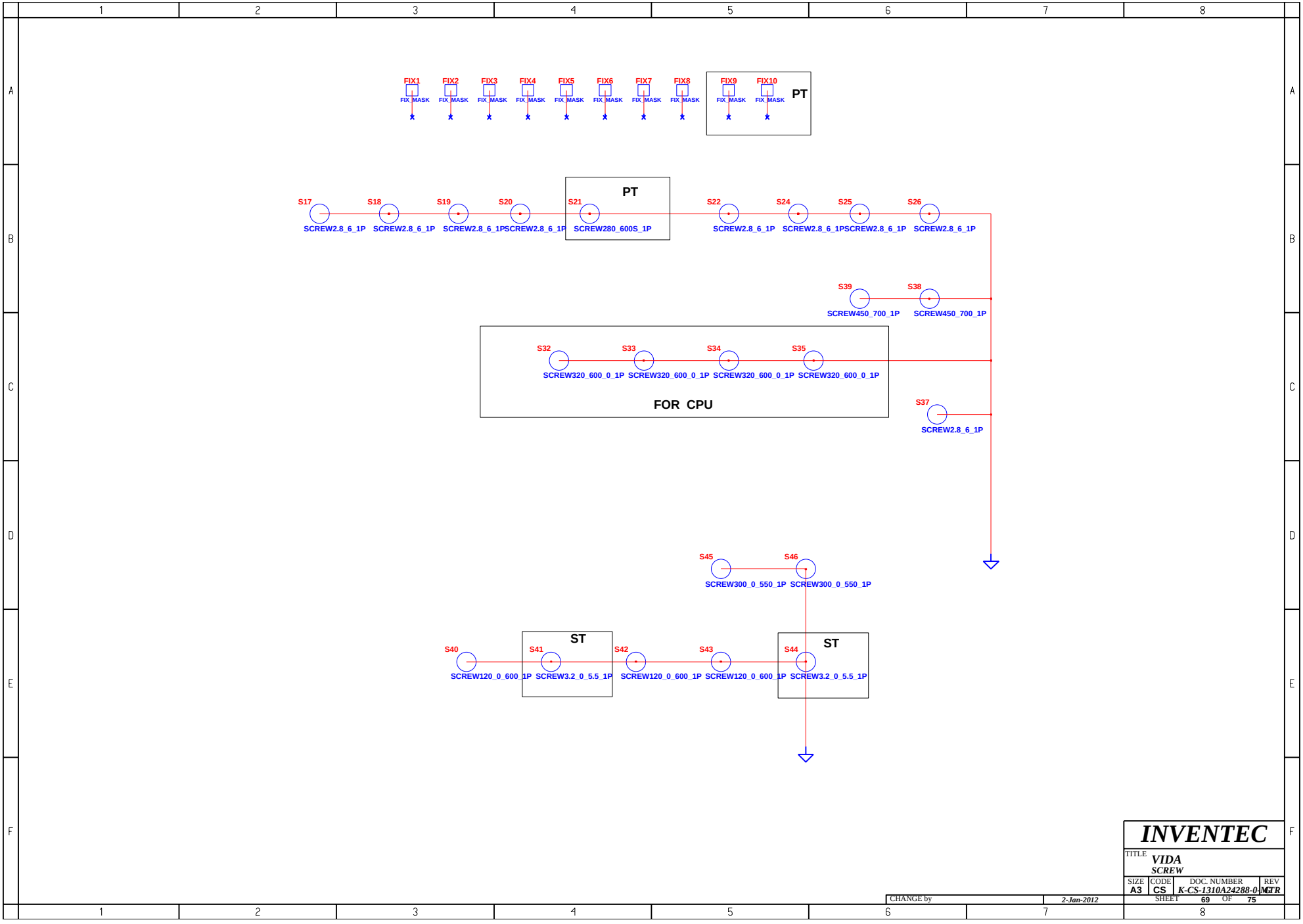

www.teknisi-indonesia.com

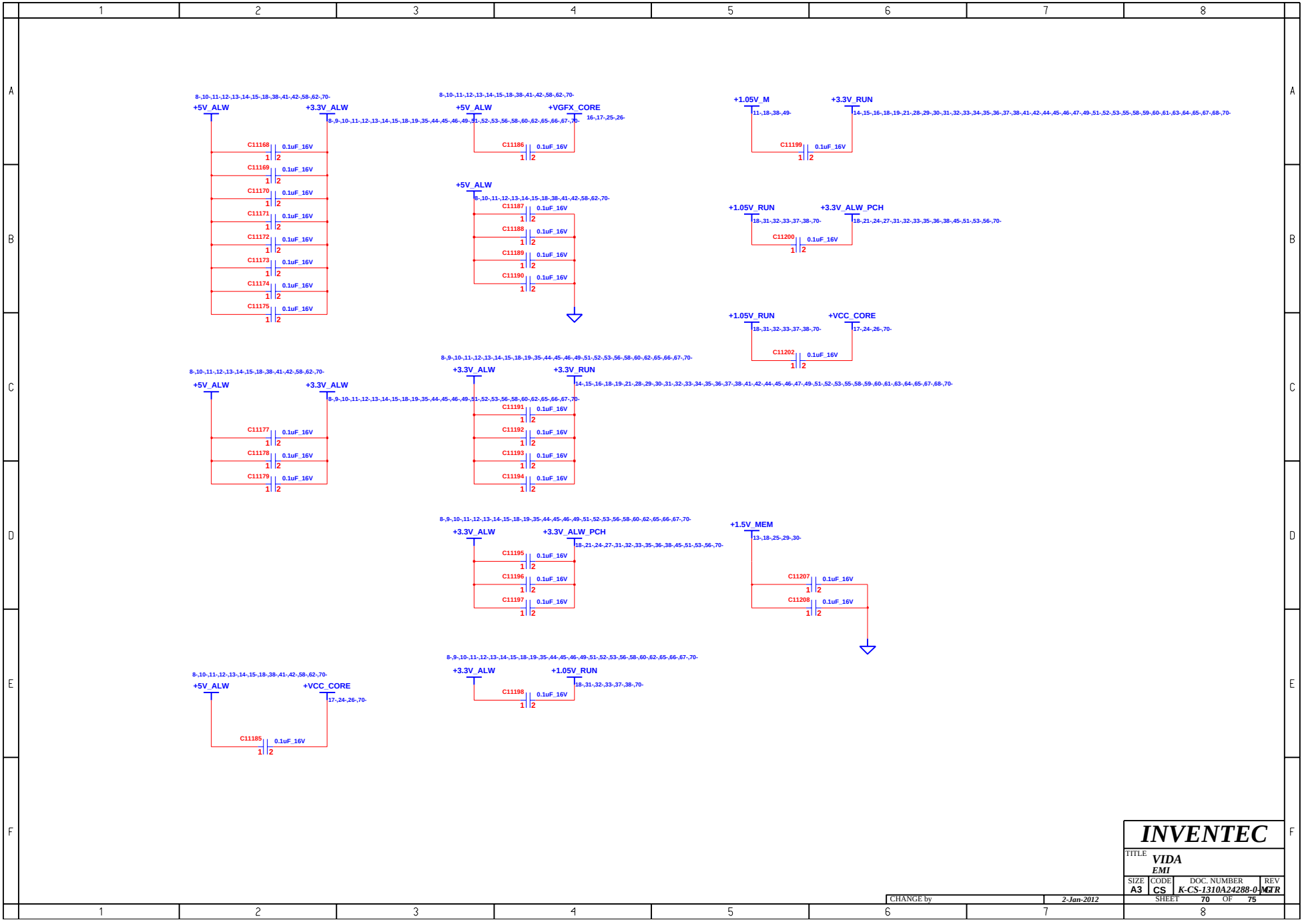

www.teknisi-indonesia.com

VIDA_DB

X BUILD

2010/12/29

DELL CONFIDENTIAL/PROPRIETARY

PROPRITARY NOTE: THIS SHEET OF NGINEERING DRAWING AND SPECIFICATIONS CONTAINS CONFIDENTAL TRADE SECRET AND OTHER PROPTIETARY INFORMATION OF DELL INC. ("DELL") THIS DOCUMENT MAY NOT BE TRANSFERRED OR COPIED WITHOUT THE EXPRESS WRITTEN AUTHORIZATION OF DELL. IN ADDITION, NEITHER THIS SHEET NOR THE INFORMATION IT CONTAINS WAY BE USED BY OR DISCLOSED TO ANY THIRD PARTY WITHOUT DELL'S EXPRESS WRITTEN CONSENT.

INVENTEC			
TITLE VIDA			
SIZE A3	CODE CS	DOC. NUMBER K-CS-1310A24288-0-MTR	REV
CHANGE by	2-Jan-2012	SHEET 71 OF 75	

www.teknisi-indonesia.com

BIOS BOARD

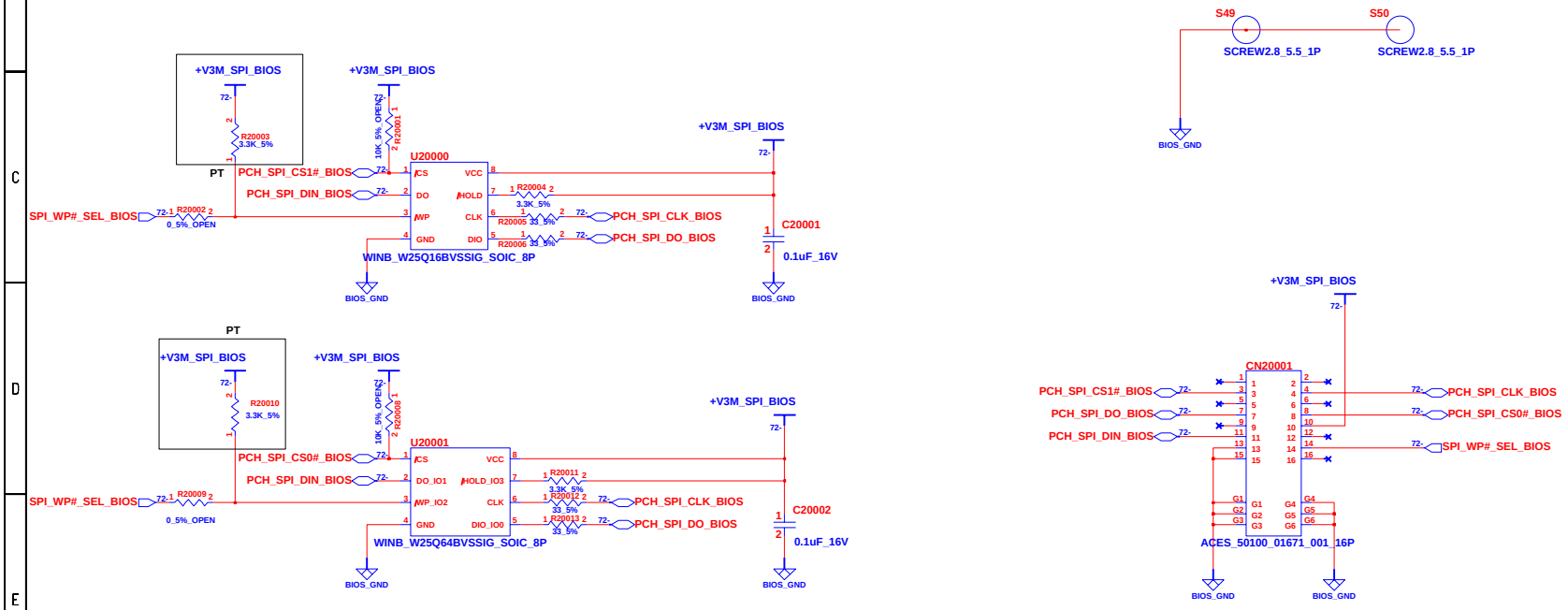

CHANGE by		2-Jan-2012	

INVENTEC

TITLE: VIDA
BIOS board

SIZE	CODE	DOC. NUMBER	REV
A3	CS	K-CS-1310A24288-0-MTR	

SHEET 72 OF 75

www.teknisi-indonesia.com

HALLSENSOR BOARD

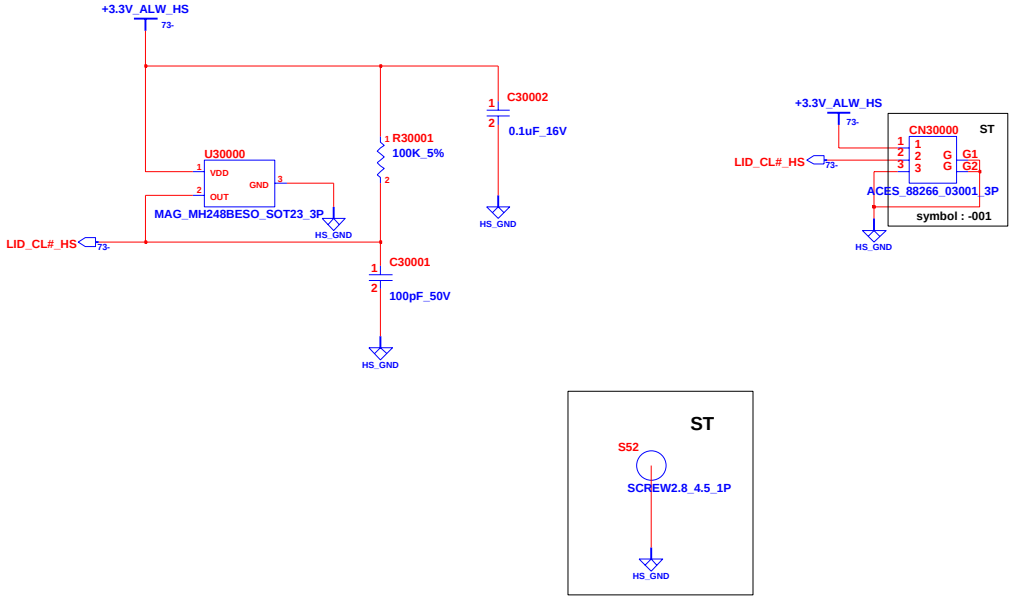

CHANGE by		2-Jan-2012	

INVENTEC

TITLE *VIDA*
HALLSENSOR_B

SIZE	CODE	DOC. NUMBER	REV
A3	CS	K-CS-1310A24288-0-MTR	

SHEET 73 OF 75

www.teknisi-indonesia.com

WLAN SW BOARD

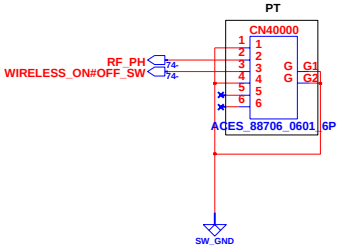

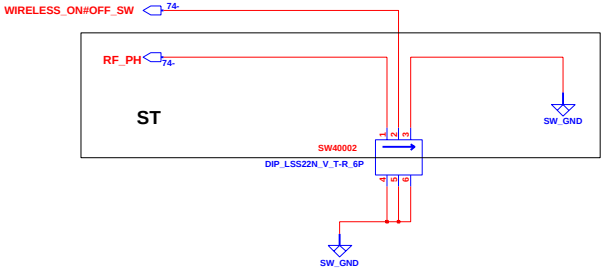

CHANGE by		2-Jan-2012	

INVENTEC

TITLE *VIDA*
WLAN_B

SIZE	CODE	DOC. NUMBER	REV
A3	CS	K-CS-1310A24288-0-MTR	

SHEET 74 OF 75

www.teknisi-indonesia.com

SPI BOARD

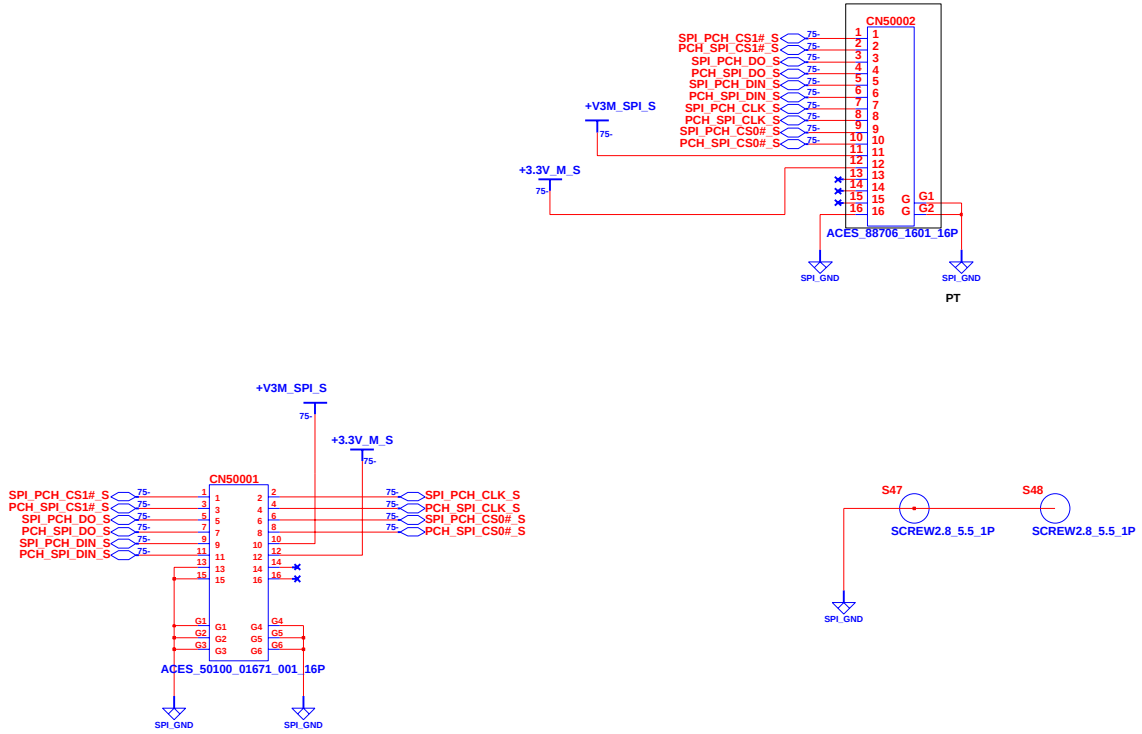

INVENTEC			
TITLE VIDA SPI BOARD			
SIZE A3	CODE CS	DOC. NUMBER K-CS-1310A24288-0-MTR	REV
CHANGE by	2-Jan-2012	SHEET 75 OF 75	

www.teknisi-indonesia.com