# AMD-UMA

# Volna

# SI Build Final

**2008/12/26**

| DATE | CHANGE NO. | REV |
|---|---|---|

| | EE | DATE | POWER | DATE |
|---|---|---|---|---|
| DRAWER | | | | |
| DESIGN | | | | |
| CHECK | | | | |
| RESPONSIBLE | | | | |

SIZE = 3 VER :

FILE NAME : XXXX-XXXXXX-XX

P/N XXXXXXXXXXXX

**INVENTEC**

TITLE *Volna 09 AMD-UMA*

| SIZE | CODE | DOC. NUMBER | REV |
|---|---|---|---|
| A3 | CS | *1310A22587-0* | *AX1* |

SHEET 1 OF 53

# TABLE OF CONTENTS


PAGE
5- DC& BATTERY CHARGER
6- SELECT & BATTERY CONN
7- +V5A,+V3A & +V2.5S
8- OCP
9- +VCC_NB & +V1.2A
10- +VCC_CORE
11- POWER
12- DDR2 POWER
13- POWER(SLEEP)
14- POWER(SEQUENCE)

PAGE
15- CLOCK_GENERATOR
16- CPU-1
17- CPU-2
18- CPU-3
19- CPU-4
20- THERMAL&FAN CONTROLLER
21- RS780MN-1
22- RS780MN-2
23- RS780MN-3
24- RS780MN-4
25- DDR2-DIMM0
26- DDR2-DIMM1
27- DDR2-DAMPING
28- CRT
29- LCD CONN
30- SB700-1
31- SB700-2
32- SB700-3
33- SB700-4
34- KBC

PAGE
35- KB & TP CONN
36- SPI
37- HDD & ODD CONN
38- USB CONN
39- USB WEBCAM CONN
40- EMI
41- AZALIA CODEC
42- Earphone & MIC JACK
43- AUDIO AMP & HP JACK
44- MDC CNTR
45- NIC 10/100- CONTROLLER
46- NIC 10/100- RJ45 CONN
47- MINICARD & BT CONN
48- EXPRESS CARD
49- FLASH MEDIA CARD
50- BUTTON & LED
51- SCREW
52- ODD Extention Board
53- SWITCH Board

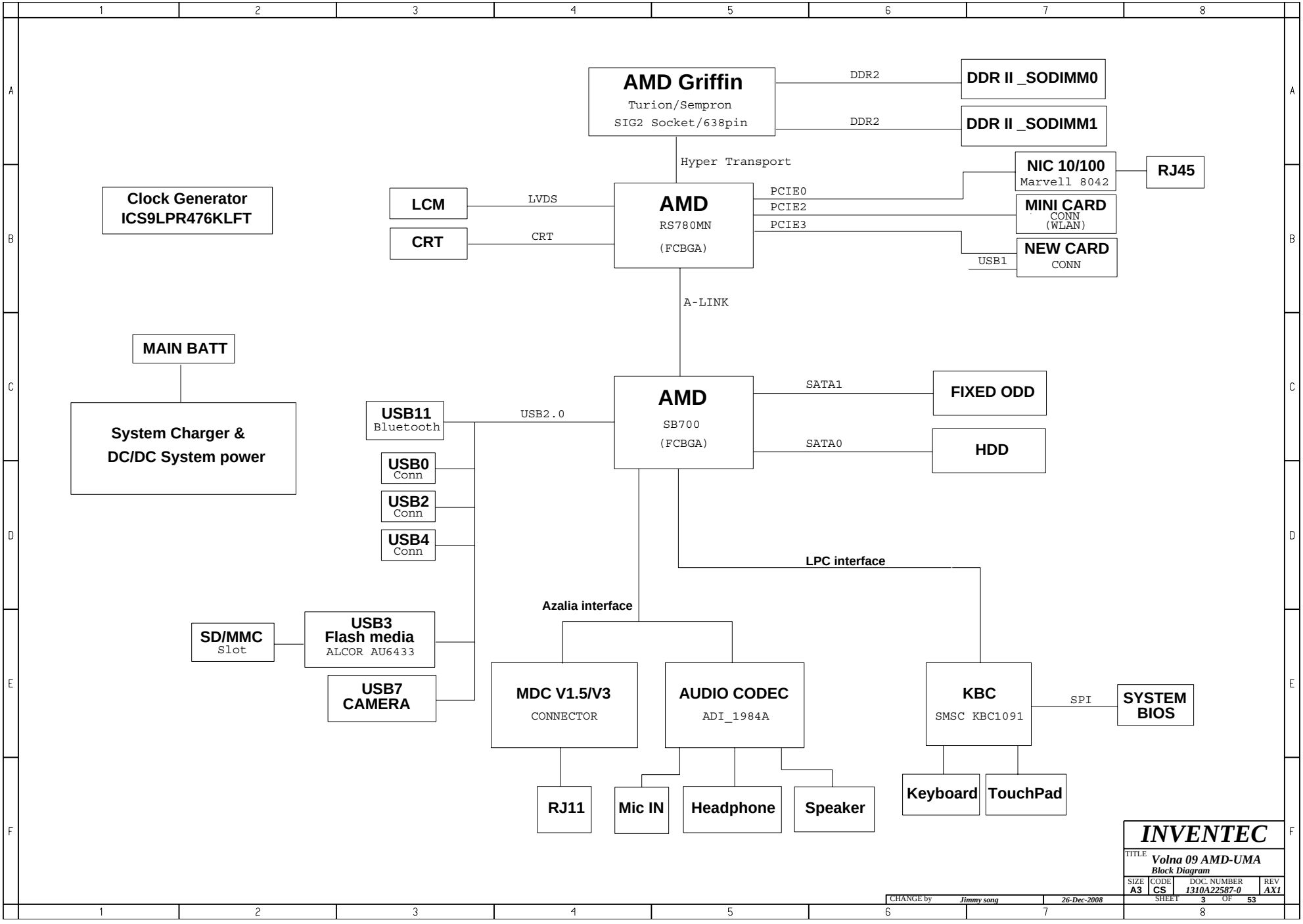
AMD Griffin
Turion/Sempron
SIG2 Socket/638pin
DDR2
DDR II _SODIMM0
DDR2
DDR II _SODIMM1
Hyper Transport
Clock Generator
ICS9LPR476KLFT
LCM
LVDS
CRT
CRT
AMD
RS780MN
(FCBGA)
PCIE0
PCIE2
PCIE3
NIC 10/100
Marvell 8042
RJ45
MINI CARD
CONN
(WLAN)
NEW CARD
CONN
USB1
A-LINK
MAIN BATT
System Charger &
DC/DC System power
AMD
SB700
(FCBGA)
SATA1
FIXED ODD
SATA0
HDD
USB11
Bluetooth
USB2.0
USB0
Conn
USB2
Conn
USB4
Conn
LPC interface
Azalia interface
SD/MMC
Slot
USB3
Flash media
ALCOR AU6433
USB7
CAMERA
MDC V1.5/V3
CONNECTOR
AUDIO CODEC
ADI_1984A
KBC
SMSC KBC1091
SPI
SYSTEM
BIOS
RJ11
Mic IN
Headphone
Speaker
Keyboard
TouchPad
INVENTEC
TITLE
Volna 09 AMD-UMA
Block Diagram
SIZE
A3
CODE
CS
DOC. NUMBER
1310A22587-0
REV
AX1
SHEET
3
OF
53
CHANGE by
Jimmy song
26-Dec-2008

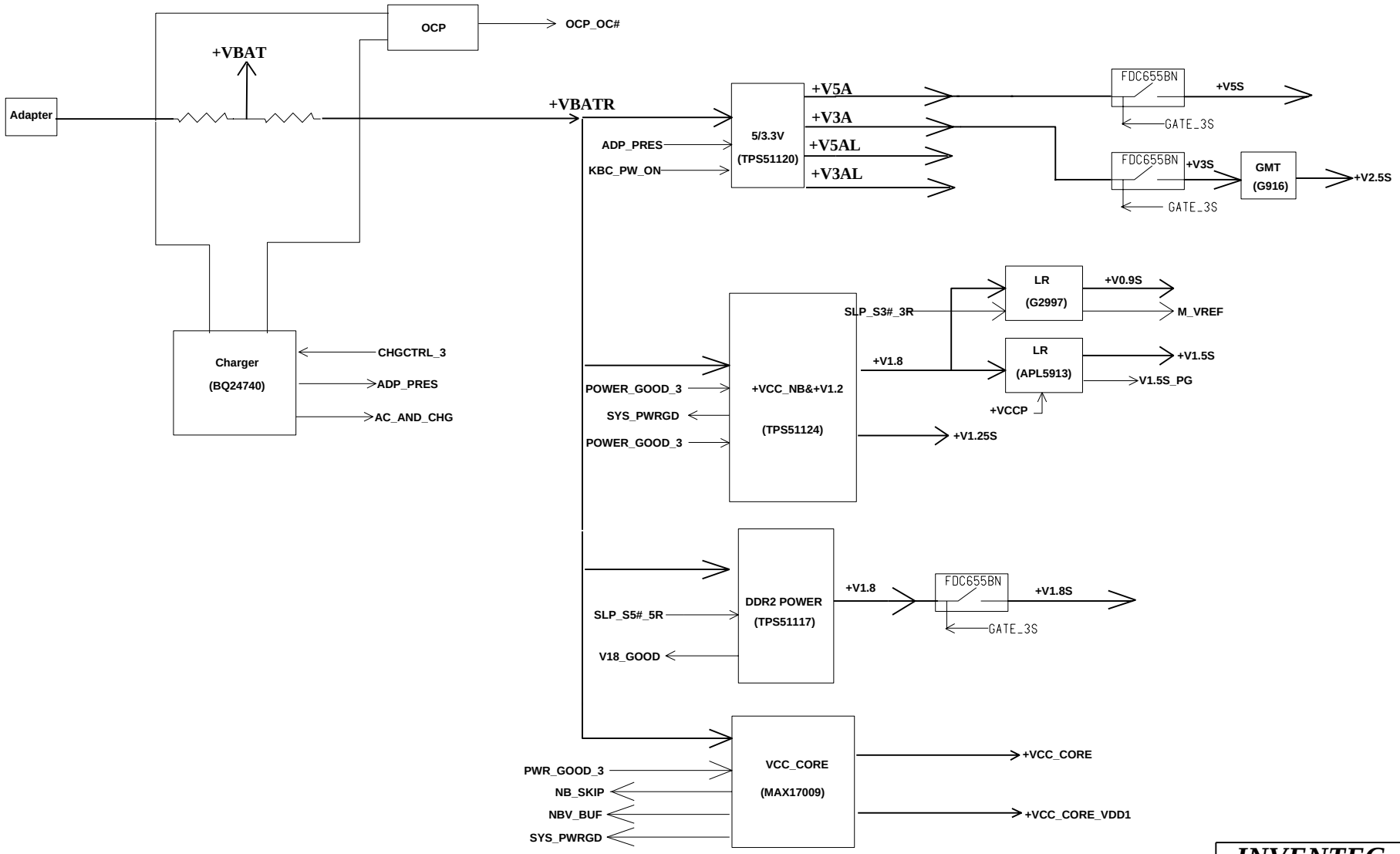


| | | | |
|---|---|---|---|
| INVENTEC | | | |
| TITLE Volna 09 AMD-UMA | | | |
| SIZE A3 | CODE CS | DOC. NUMBER 1310A22587-0 | REV AX1 |
| CHANGE by Jimmy song | 26-Dec-2008 | SHEET 4 OF 53 | |

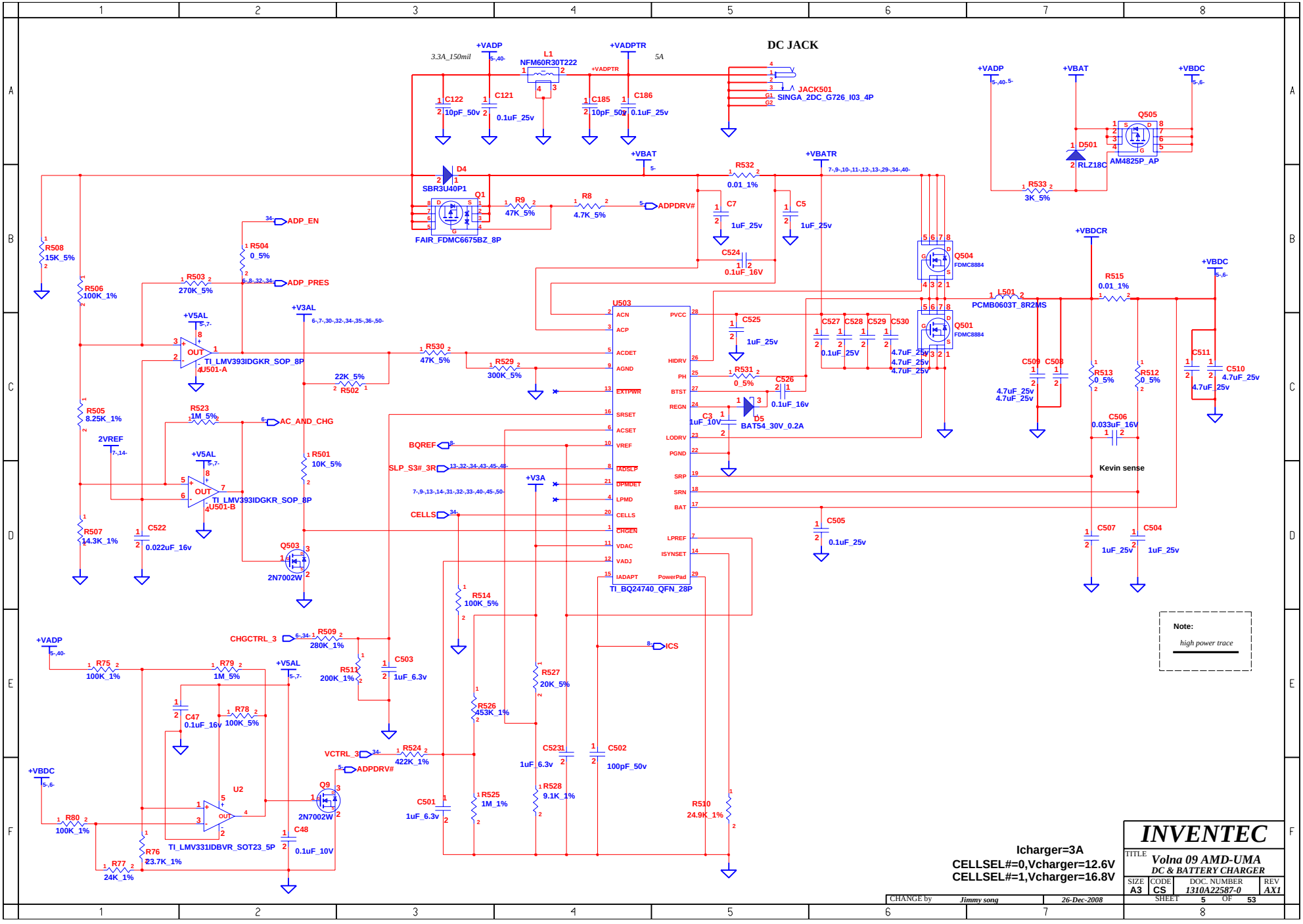
DC JACK
JACK501
SINGA_2DC_G726_I03_4P
+VADP
+VADPTR
+VBAT
+VBATR
+VBDC
+VBDCR
+V3AL
+V5AL
+V3A
L1
NFM60R30T222
3.3A_150mil
5A
C122
10pF_50v
C121
0.1uF_25v
C185
10pF_50v
C186
0.1uF_25v
D4
SBR3U40P1
Q1
FAIR_FDMC6675BZ_8P
R9
47K_5%
R8
4.7K_5%
ADPDRV#
R532
0.01_1%
C7
1uF_25v
C5
1uF_25v
C524
0.1uF_16V
Q505
AM4825P_AP
D501
RLZ18C
R533
3K_5%
Q504
FDMC8884
Q501
FDMC8884
L501
PCMB0603T_8R2MS
R515
0.01_1%
C509
C508
4.7uF_25v
4.7uF_25v
R513
0_5%
R512
0_5%
C511
C510
4.7uF_25v
4.7uF_25v
C506
0.033uF_16V
Kevin sense
C507
1uF_25v
C504
1uF_25v
C505
0.1uF_25v
R508
15K_5%
R506
100K_1%
R504
0_5%
ADP_EN
R503
270K_5%
ADP_PRES
R505
8.25K_1%
R523
1M_5%
AC_AND_CHG
2VREF
R501
10K_5%
R507
14.3K_1%
C522
0.022uF_16v
Q503
2N7002W
TI_LMV393IDGKR_SOP_8P
U501-A
U501-B
R530
47K_5%
R529
300K_5%
22K_5%
R502
U503
TI_BQ24740_QFN_28P
ACN
ACP
ACDET
AGND
EXTPWR
SRSET
ACSET
VREF
ADSLP
DPMDET
LPMD
CELLS
CHGEN
VDAC
VADJ
IADAPT
PVCC
HIDRV
PH
BTST
REGN
LODRV
PGND
SRP
SRN
BAT
LPREF
ISYNSET
PowerPad
BQREF
SLP_S3#_3R
CELLS
C525
1uF_25v
R531
0_5%
C526
0.1uF_16v
C527
C528
C529
C530
0.1uF_25V
4.7uF_25v
4.7uF_25v
4.7uF_25v
C3
1uF_10V
D5
BAT54_30V_0.2A
R514
100K_5%
CHGCTRL_3
R509
280K_1%
R511
200K_1%
C503
1uF_6.3v
ICS
R527
20K_5%
R526
453K_1%
C5231
1uF_6.3v
C502
100pF_50v
R525
1M_1%
R528
9.1K_1%
R510
24.9K_1%
C501
1uF_6.3v
R75
100K_1%
R79
1M_5%
C47
0.1uF_16v
R78
100K_5%
VCTRL_3
R524
422K_1%
ADPDRV#
Q9
2N7002W
U2
TI_LMV331IDBVR_SOT23_5P
R80
100K_1%
R76
23.7K_1%
R77
24K_1%
C48
0.1uF_10V
Note:
high power trace
Icharger=3A
CELLSEL#=0,Vcharger=12.6V
CELLSEL#=1,Vcharger=16.8V
INVENTEC
TITLE
Volna 09 AMD-UMA
DC & BATTERY CHARGER
SIZE A3
CODE CS
DOC. NUMBER 1310A22587-0
REV AX1
SHEET 5 OF 53
CHANGE by Jimmy song
26-Dec-2008

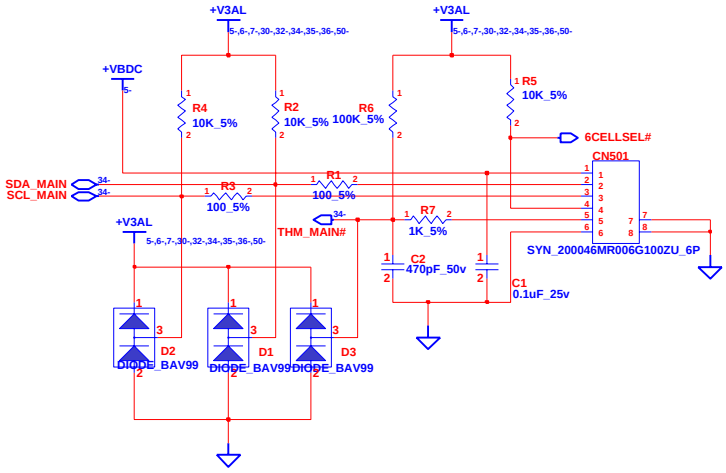


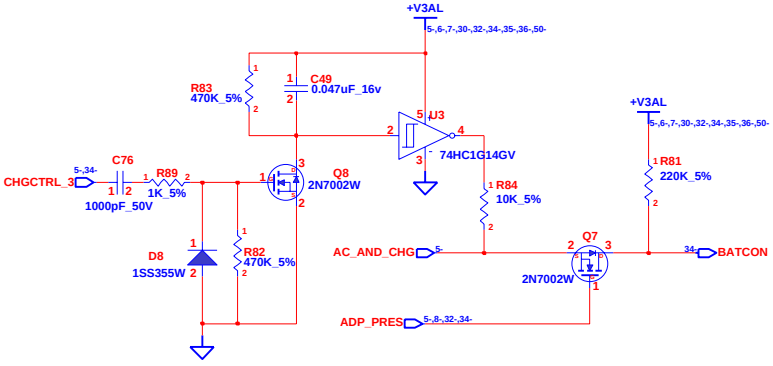


| | | | |
|---|---|---|---|
| INVENTEC | | | |
| TITLE Volna 09 AMD-UMA SELECT & BATTERY CONN | | | |
| SIZE A3 | CODE CS | DOC. NUMBER 1310A22587-0 | REV AX1 |
| CHANGE by Jimmy song | 26-Dec-2008 | SHEET 6 OF 53 | |

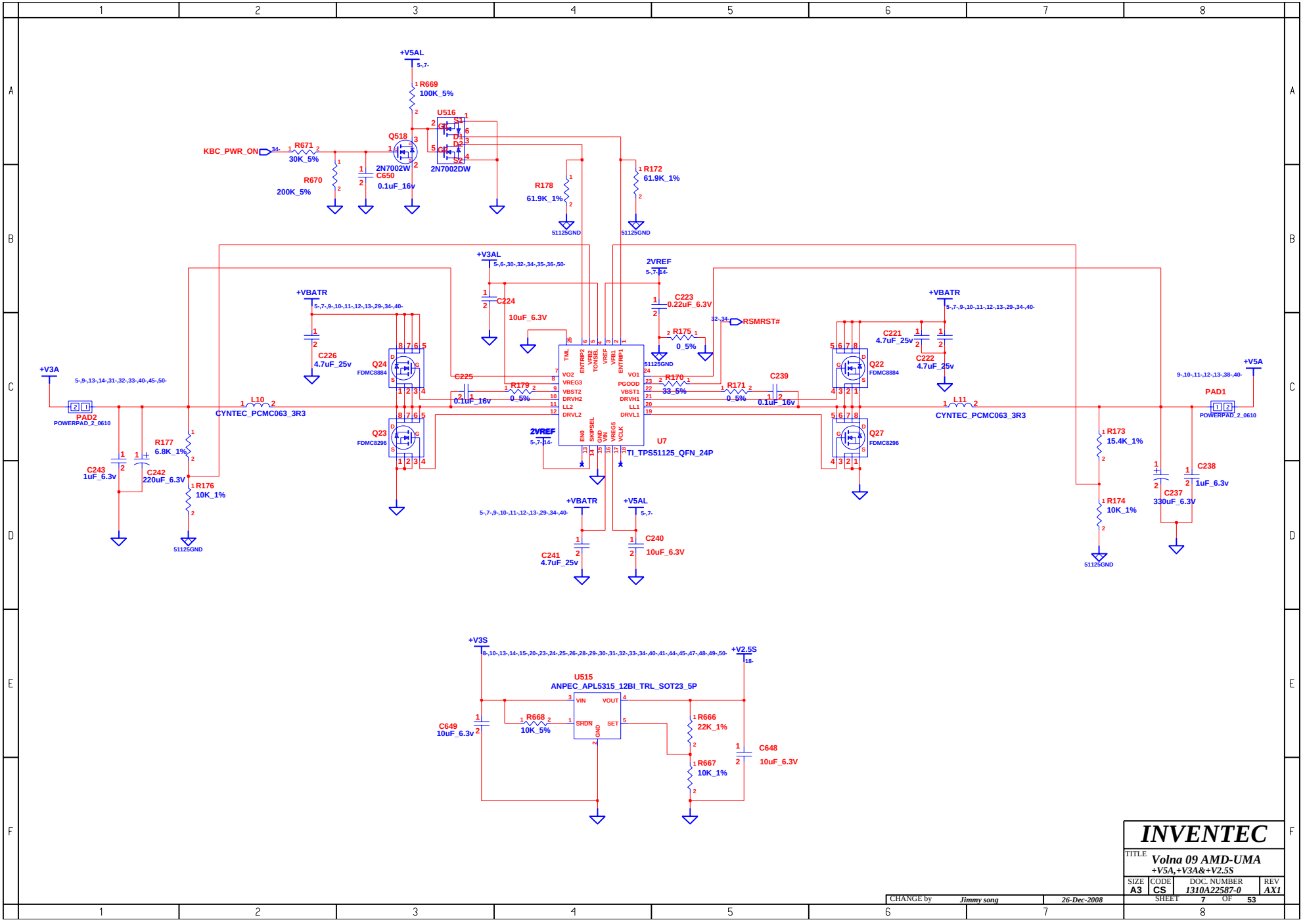


# INVENTEC

TITLE: *Volna 09 AMD-UMA*
*+V5A,+V3A&+V2.5S*

| SIZE | CODE | DOC. NUMBER | REV |
|---|---|---|---|
| A3 | CS | 1310A22587-0 | AX1 |

SHEET 7 OF 53

CHANGE by *Jimmy song* *26-Dec-2008*

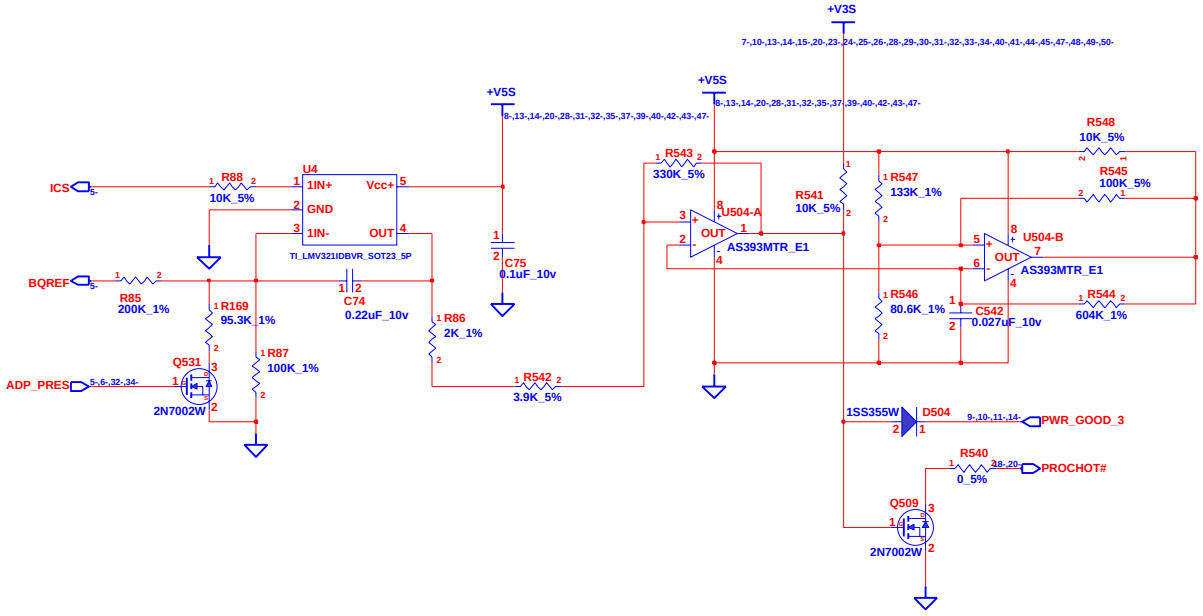


# INVENTEC

TITLE **Volna 09 AMD-UMA**
**OCP**

| SIZE | CODE | DOC. NUMBER | REV |
|---|---|---|---|
| A3 | CS | 1310A22587-0 | AX1 |

SHEET 8 OF 53

| CHANGE by | Jimmy song | 26-Dec-2008 |
|---|---|---|

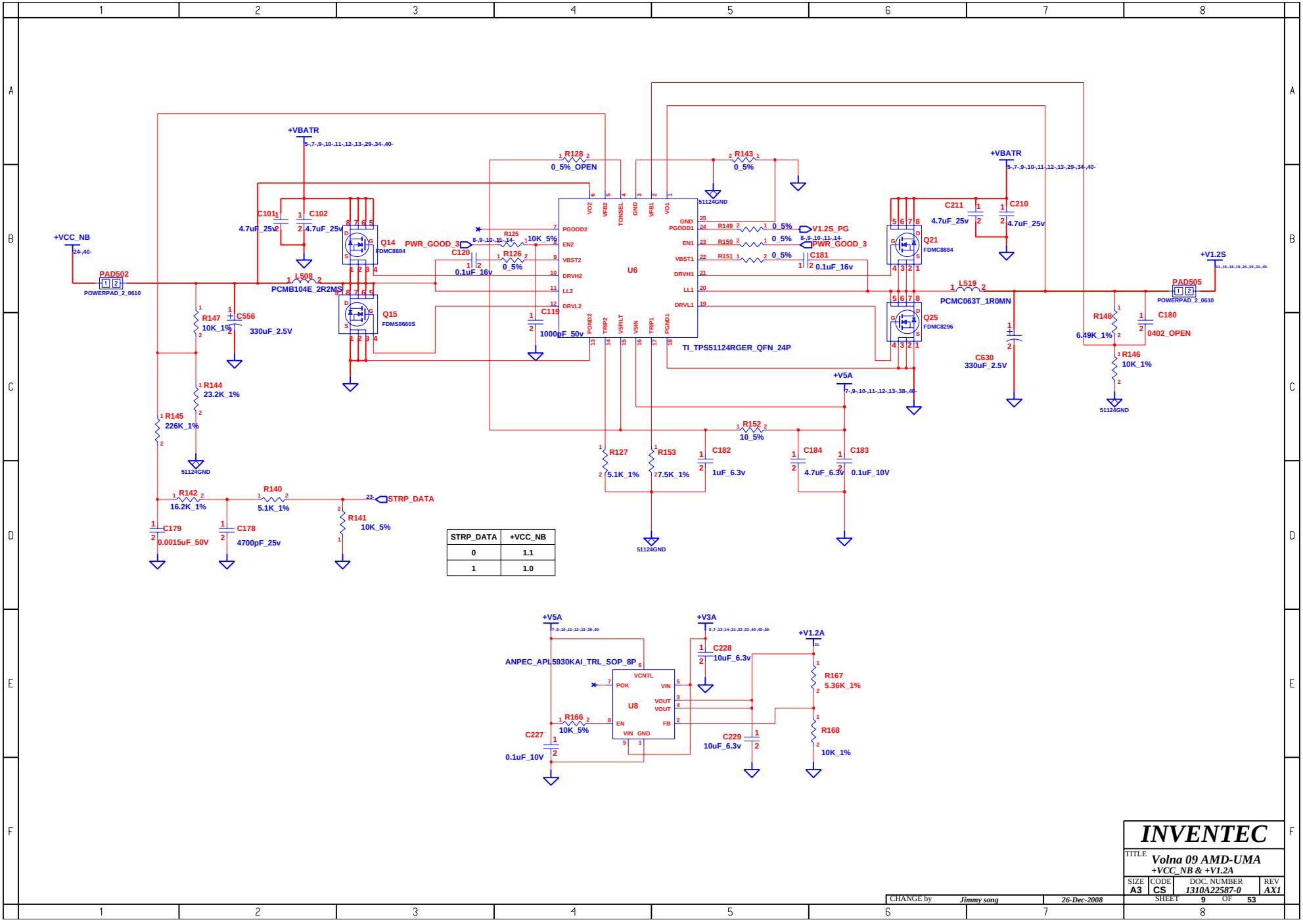


| STRP_DATA | +VCC_NB |
|---|---|
| 0 | 1.1 |
| 1 | 1.0 |

**INVENTEC**

TITLE: *Volna 09 AMD-UMA*
*+VCC_NB & +V1.2A*

| SIZE | CODE | DOC. NUMBER | REV |
|---|---|---|---|
| A3 | CS | 1310A22587-0 | AX1 |

CHANGE by *Jimmy song* *26-Dec-2008*

SHEET 9 OF 53

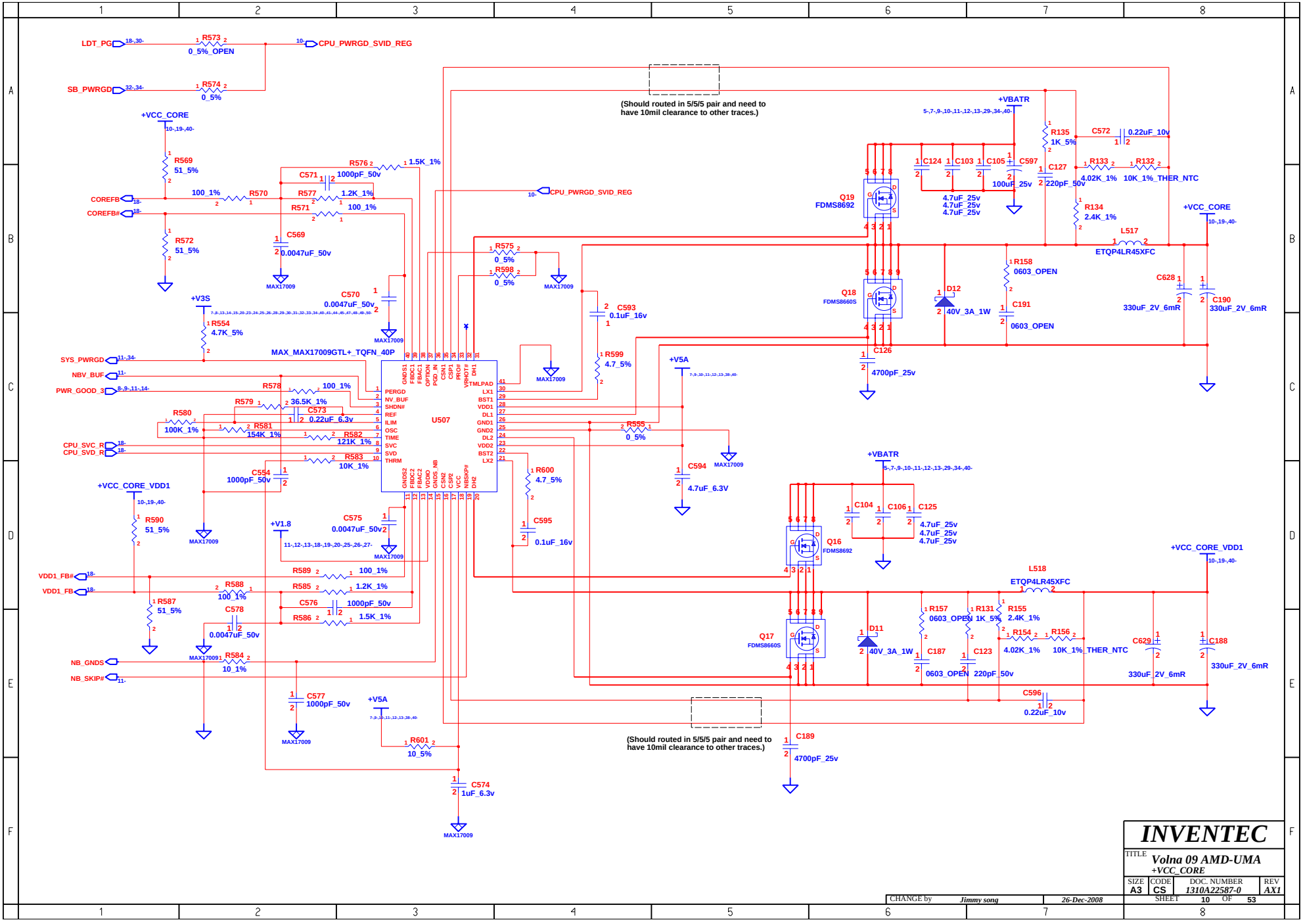


INVENTEC

TITLE: Volna 09 AMD-UMA
+VCC_CORE

| SIZE | CODE | DOC. NUMBER | REV |
|---|---|---|---|
| A3 | CS | 1310A22587-0 | AX1 |

SHEET 10 OF 53

CHANGE by Jimmy song 26-Dec-2008

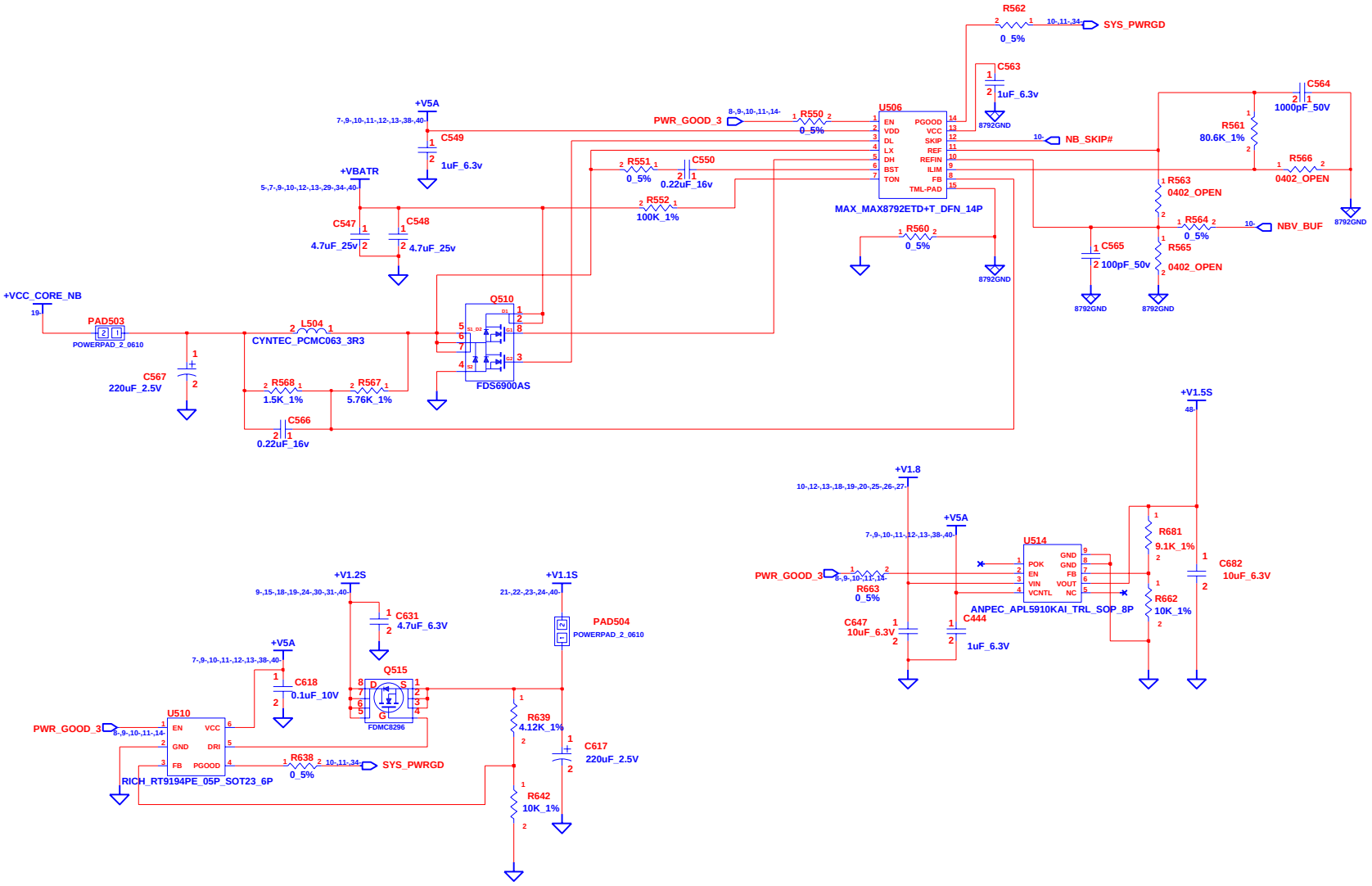


| | | | |
|---|---|---|---|
| CHANGE by | Jimmy song | 26-Dec-2008 | |

# INVENTEC

TITLE: Volna 09 AMD-UMA
POWER

| SIZE | CODE | DOC. NUMBER | REV |
|---|---|---|---|
| A3 | CS | 1310A22587-0 | AX1 |

SHEET 11 OF 53

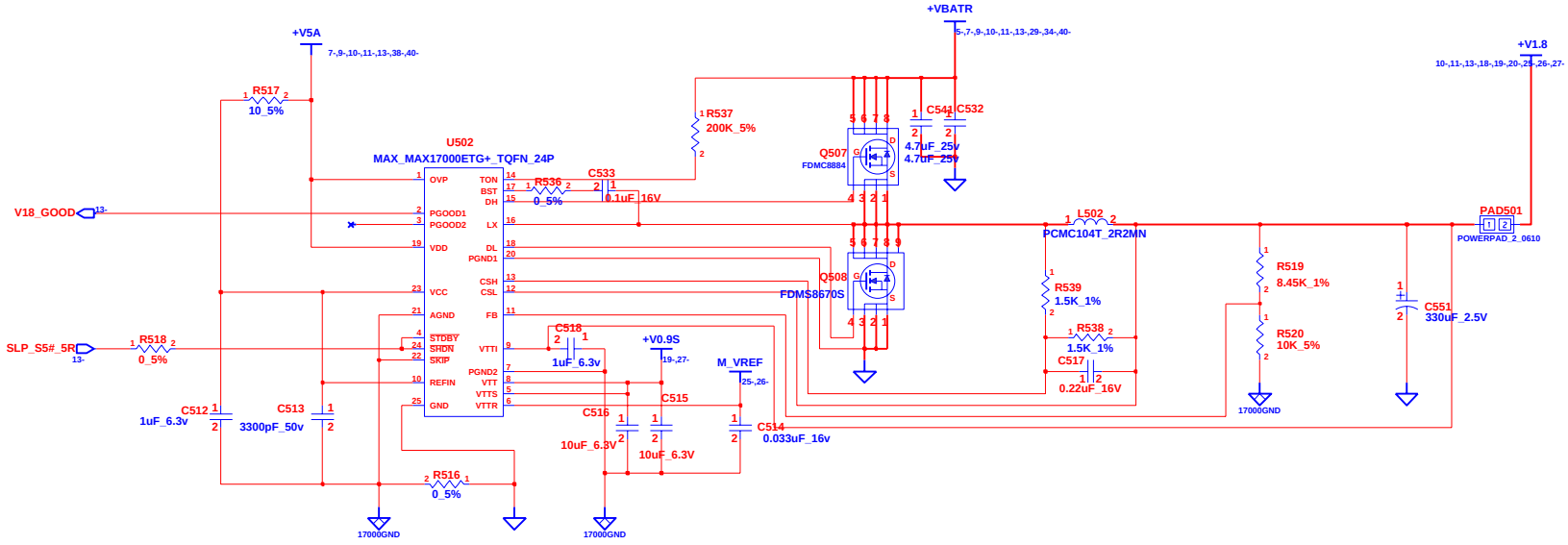


**NOTE: DDR2 REGULATOR**

| | | | |
|---|---|---|---|
| CHANGE by | Jimmy song | 26-Dec-2008 | |

# INVENTEC

TITLE *Volna 09 AMD-UMA*
*DDR2 POWER*

| SIZE | CODE | DOC. NUMBER | REV |
|---|---|---|---|
| A3 | CS | 1310A22587-0 | AX1 |

SHEET 12 OF 53

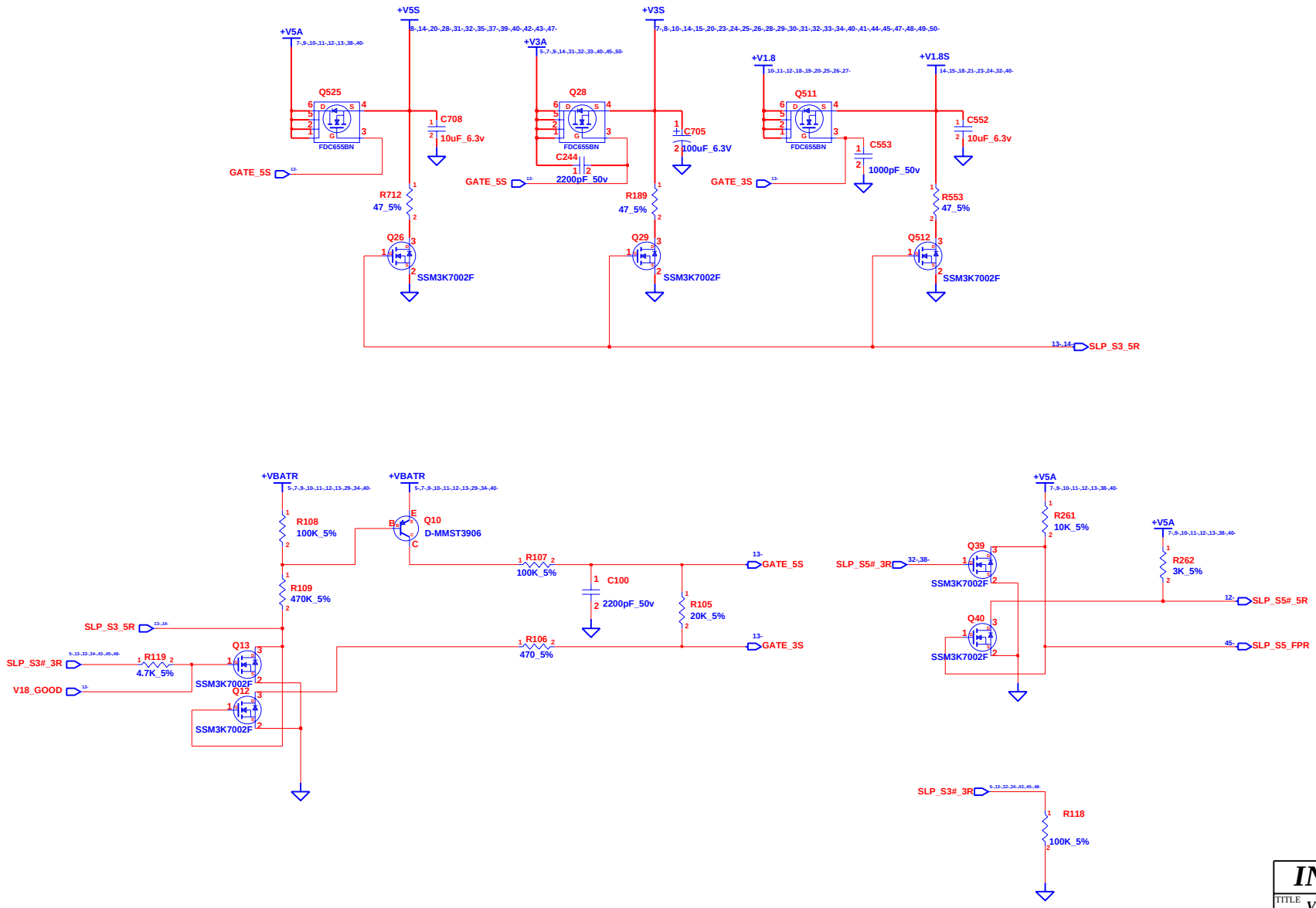


# INVENTEC

TITLE **Volna 09 AMD-UMA**
*POWER(Sleep)*

| SIZE | CODE | DOC. NUMBER | REV |
|---|---|---|---|
| A3 | CS | 1310A22587-0 | AX1 |

CHANGE by *Jimmy song* *26-Dec-2008*

SHEET 13 OF 53

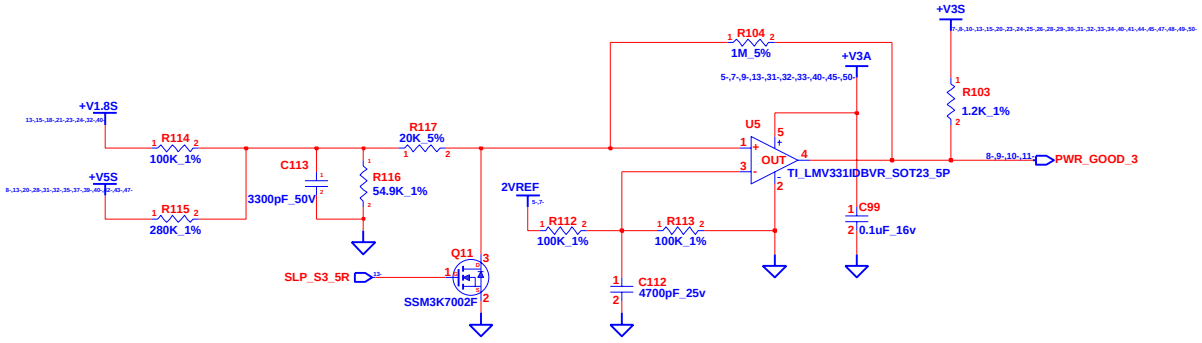


| | | | |
|---|---|---|---|
| CHANGE by | Jimmy song | 26-Dec-2008 | |

# INVENTEC

TITLE **Volna 09 AMD-UMA**
**POWER(Sequence)**

| SIZE | CODE | DOC. NUMBER | REV |
|---|---|---|---|
| A3 | CS | 1310A22587-0 | AX1 |

SHEET 14 OF 53

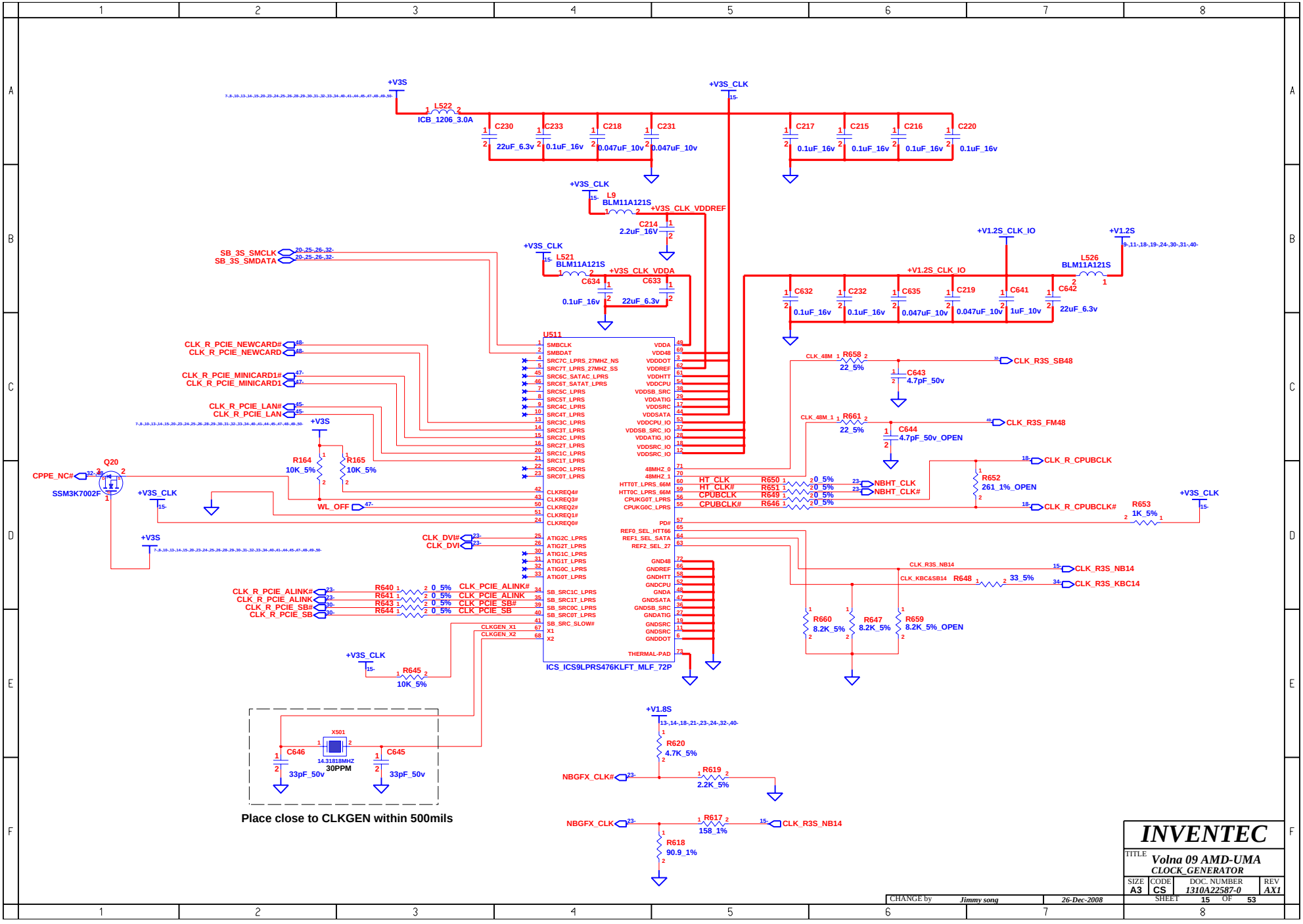
+V3S
L522
ICB_1206_3.0A
C230
22uF_6.3v
C233
0.1uF_16v
C218
0.047uF_10v
C231
0.047uF_10v
+V3S_CLK
C217
0.1uF_16v
C215
0.1uF_16v
C216
0.1uF_16v
C220
0.1uF_16v
L9
BLM11A121S
+V3S_CLK_VDDREF
C214
2.2uF_16V
SB_3S_SMCLK
SB_3S_SMDATA
L521
BLM11A121S
+V3S_CLK_VDDA
C634
0.1uF_16v
C633
22uF_6.3v
+V1.2S_CLK_IO
+V1.2S
L526
BLM11A121S
C632
0.1uF_16v
C232
0.1uF_16v
C635
0.047uF_10v
C219
0.047uF_10v
C641
1uF_10v
C642
22uF_6.3v
U511
CLK_R_PCIE_NEWCARD#
CLK_R_PCIE_NEWCARD
CLK_R_PCIE_MINICARD1#
CLK_R_PCIE_MINICARD1
CLK_R_PCIE_LAN#
CLK_R_PCIE_LAN
R658
22_5%
CLK_R3S_SB48
C643
4.7pF_50v
R661
22_5%
CLK_R3S_FM48
C644
4.7pF_50v_OPEN
CLK_R_CPUBCLK
R652
261_1%_OPEN
CLK_R_CPUBCLK#
R653
1K_5%
+V3S_CLK
Q20
CPPE_NC#
SSM3K7002F
R164
10K_5%
R165
10K_5%
WL_OFF
HT_CLK
HT_CLK#
CPUBCLK
CPUBCLK#
R650
R651
R649
R646
NBHT_CLK
NBHT_CLK#
CLK_DVI#
CLK_DVI
CLK_R_PCIE_ALINK#
CLK_R_PCIE_ALINK
CLK_R_PCIE_SB#
CLK_R_PCIE_SB
R640
R641
R643
R644
CLK_PCIE_ALINK#
CLK_PCIE_ALINK
CLK_PCIE_SB#
CLK_PCIE_SB
CLKGEN_X1
CLKGEN_X2
R645
10K_5%
ICS_ICS9LPRS476KLFT_MLF_72P
CLK_R3S_NB14
CLK_KBC&SB14
R648
33_5%
CLK_R3S_KBC14
R660
8.2K_5%
R647
8.2K_5%
R659
8.2K_5%_OPEN
+V1.8S
R620
4.7K_5%
NBGFX_CLK#
R619
2.2K_5%
NBGFX_CLK
R617
158_1%
R618
90.9_1%
X501
14.31818MHZ
30PPM
C646
33pF_50v
C645
33pF_50v
Place close to CLKGEN within 500mils
INVENTEC
TITLE
Volna 09 AMD-UMA
CLOCK_GENERATOR
SIZE A3
CODE CS
DOC. NUMBER 1310A22587-0
REV AX1
SHEET 15 OF 53
CHANGE by Jimmy song
26-Dec-2008

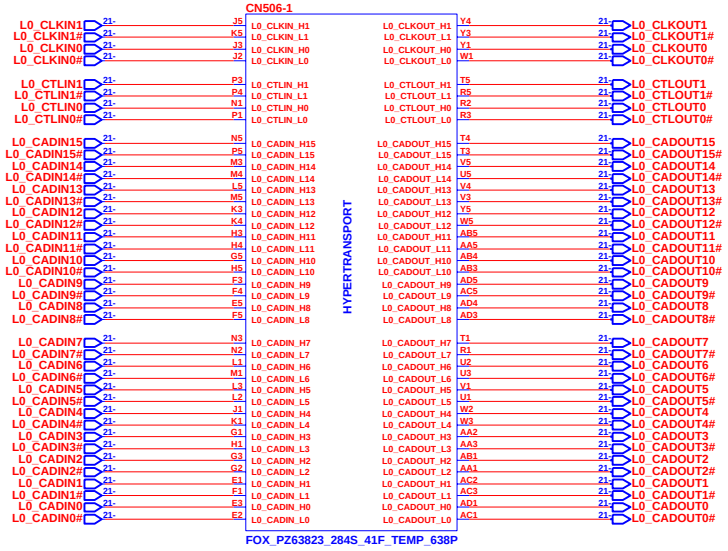


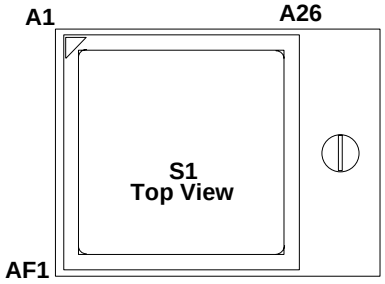


**Layout: Add stitching caps if crossing plane split.**

| | | | |
|---|---|---|---|
| CHANGE by | *Jimmy song* | *26-Dec-2008* | |

# INVENTEC

TITLE *Volna 09 AMD-UMA*
*CPU-1*

| SIZE | CODE | DOC. NUMBER | REV |
|---|---|---|---|
| A3 | CS | *1310A22587-0* | *AX1* |

SHEET 16 OF 53

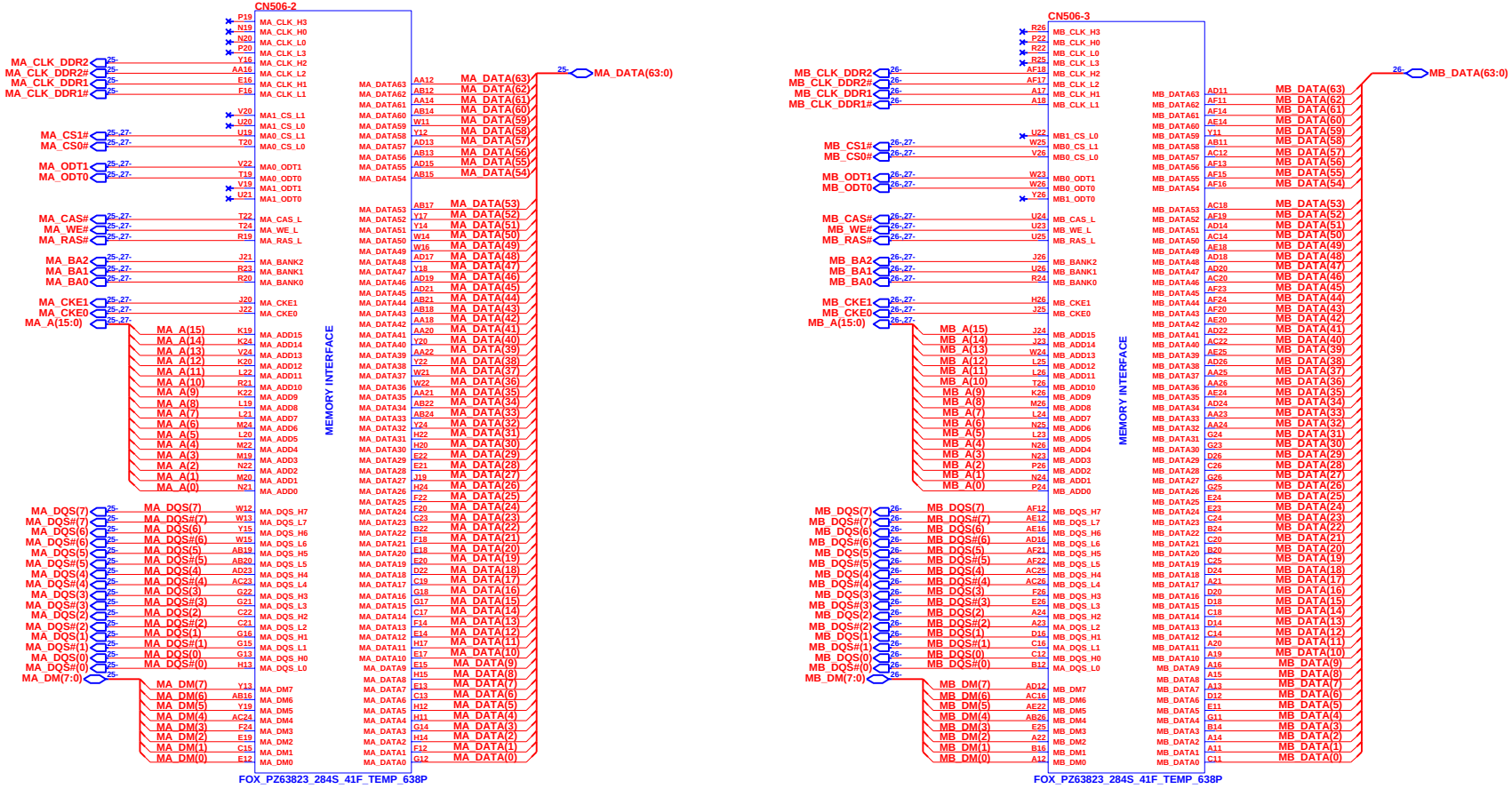


| CHANGE by | Jimmy song | 26-Dec-2008 |
|---|---|---|

# INVENTEC

TITLE: *Volna 09 AMD-UMA*
*CPU-2*

| SIZE | CODE | DOC. NUMBER | REV |
|---|---|---|---|
| A3 | CS | 1310A22587-0 | AX1 |

SHEET 17 OF 53

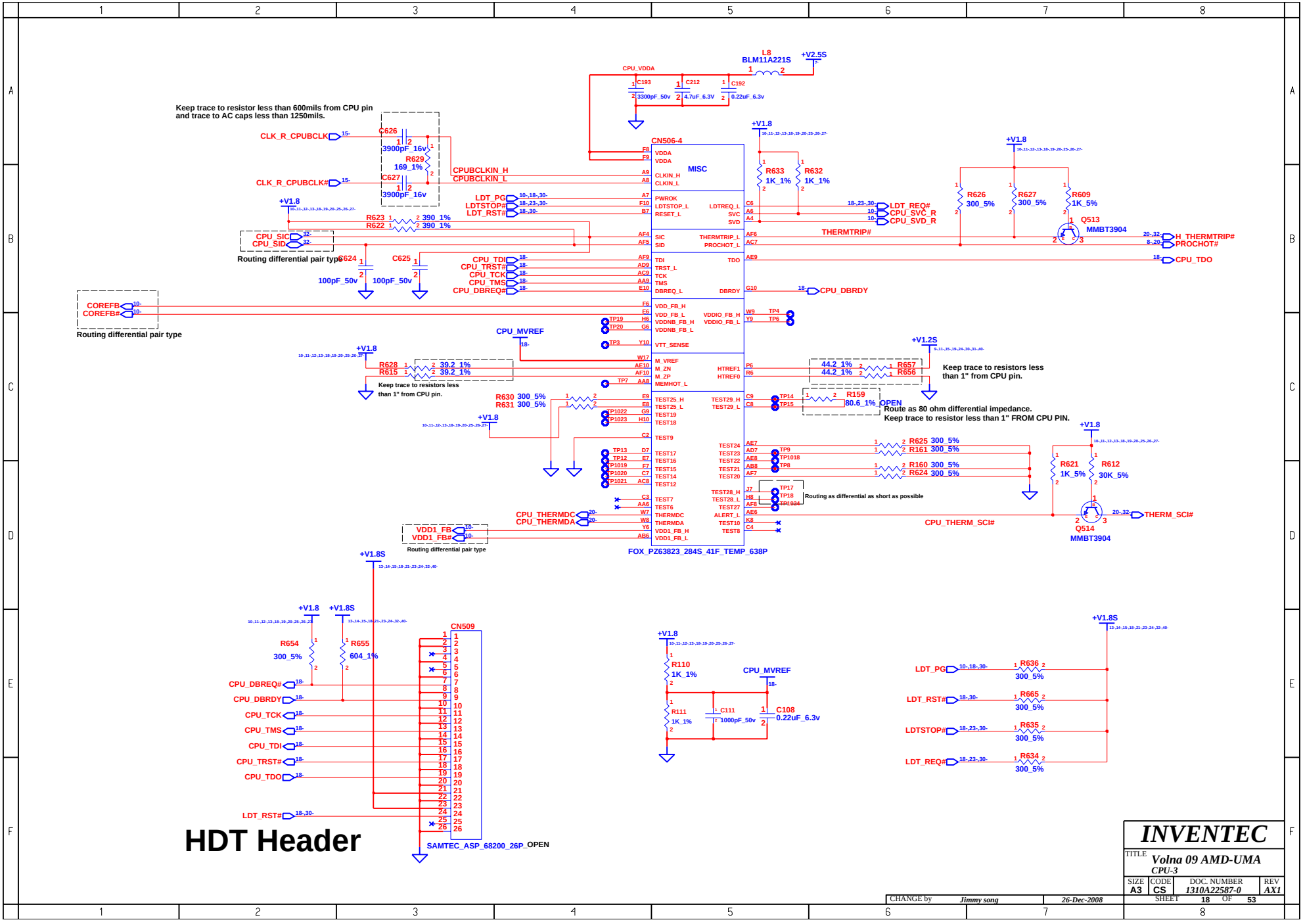
Keep trace to resistor less than 600mils from CPU pin and trace to AC caps less than 1250mils.
CLK_R_CPUBCLK
CLK_R_CPUBCLK#
C626 3900pF_16v
R629 169_1%
C627 3900pF_16v
CPUBCLKIN_H
CPUBCLKIN_L
CN506-4
MISC
L8 BLM11A221S
+V2.5S
CPU_VDDA
C193 3300pF_50v
C212 4.7uF_6.3V
C192 0.22uF_6.3v
+V1.8
R633 1K_1%
R632 1K_1%
R626 300_5%
R627 300_5%
R609 1K_5%
Q513 MMBT3904
LDT_PG
LDTSTOP#
LDT_RST#
LDT_REQ#
CPU_SVC_R
CPU_SVD_R
THERMTRIP#
H_THERMTRIP#
PROCHOT#
CPU_TDO
CPU_DBRDY
R623 390_1%
R622 390_1%
CPU_SIC
CPU_SID
Routing differential pair type
C624 100pF_50v
C625 100pF_50v
CPU_TDI
CPU_TRST#
CPU_TCK
CPU_TMS
CPU_DBREQ#
COREFB
COREFB#
CPU_MVREF
+V1.2S
R628 39.2_1%
R615 39.2_1%
Keep trace to resistors less than 1" from CPU pin.
R657 44.2_1%
R656 44.2_1%
R630 300_5%
R631 300_5%
R159 80.6_1%
OPEN
Route as 80 ohm differential impedance.
Keep trace to resistor less than 1" FROM CPU PIN.
R625 300_5%
R161 300_5%
R160 300_5%
R624 300_5%
R621 1K_5%
R612 30K_5%
Routing as differential as short as possible
CPU_THERMDC
CPU_THERMDA
VDD1_FB
VDD1_FB#
CPU_THERM_SCI#
THERM_SCI#
Q514 MMBT3904
FOX_PZ63823_284S_41F_TEMP_638P
+V1.8S
R654 300_5%
R655 604_1%
CN509
CPU_DBREQ#
CPU_DBRDY
CPU_TCK
CPU_TMS
CPU_TDI
CPU_TRST#
CPU_TDO
LDT_RST#
SAMTEC_ASP_68200_26P_OPEN
R110 1K_1%
R111 1K_1%
C111 1000pF_50v
C108 0.22uF_6.3v
R636 300_5%
R665 300_5%
R635 300_5%
R634 300_5%
HDT Header
INVENTEC
TITLE Volna 09 AMD-UMA
CPU-3
SIZE A3
CODE CS
DOC. NUMBER 1310A22587-0
REV AX1
SHEET 18 OF 53
CHANGE by Jimmy song
26-Dec-2008

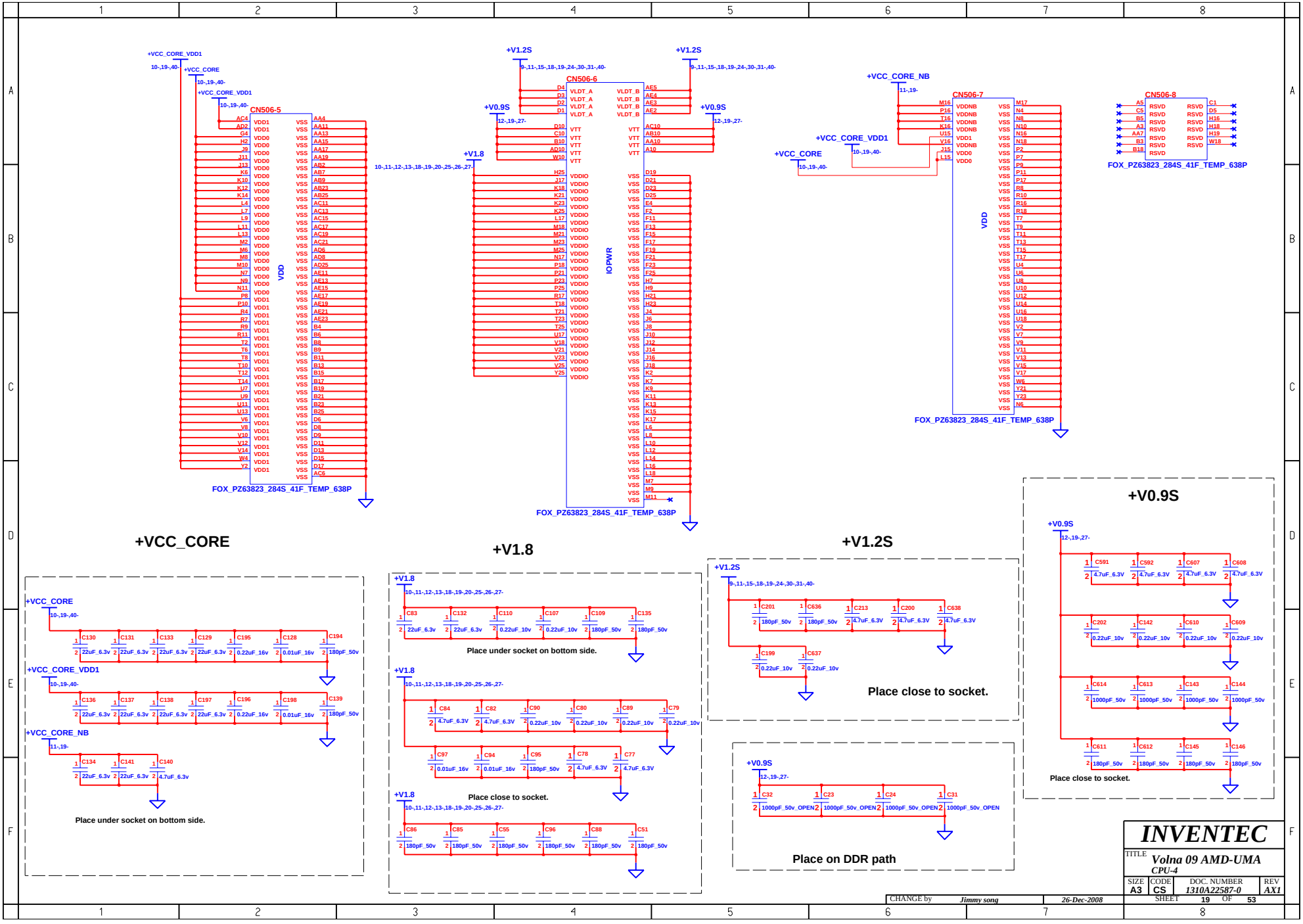
CN506-5
FOX_PZ63823_284S_41F_TEMP_638P
CN506-6
FOX_PZ63823_284S_41F_TEMP_638P
CN506-7
FOX_PZ63823_284S_41F_TEMP_638P
CN506-8
FOX_PZ63823_284S_41F_TEMP_638P
+VCC_CORE
+V1.8
+V1.2S
+V0.9S
Place under socket on bottom side.
Place close to socket.
Place on DDR path
INVENTEC
Volna 09 AMD-UMA
CPU-4
SIZE A3
CODE CS
DOC. NUMBER 1310A22587-0
REV AX1
SHEET 19 OF 53
CHANGE by Jimmy song
26-Dec-2008

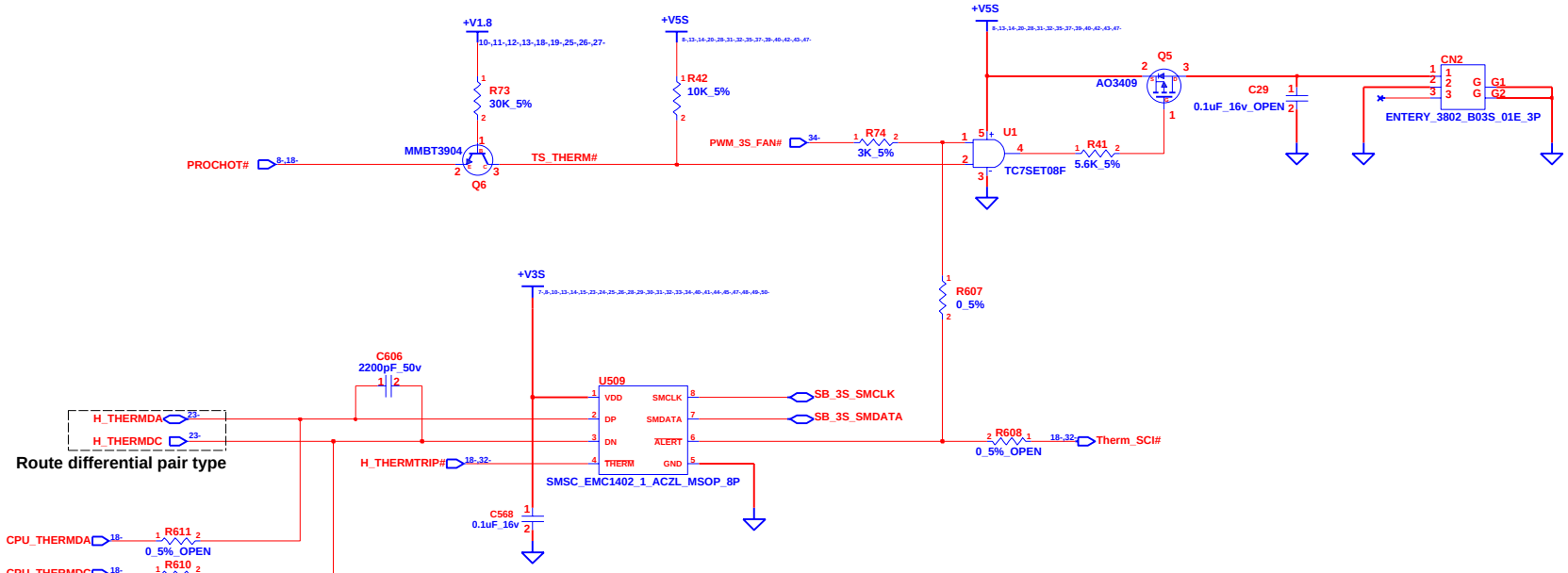


**LAYOUT Note: Put the thermal sensor close to CPU.**

| | | | |
|---|---|---|---|
| CHANGE by | Jimmy song | 26-Dec-2008 | |

**INVENTEC**

TITLE: *Volna 09 AMD-UMA*
*THERMAL & FAN CONTROLLER*

| SIZE | CODE | DOC. NUMBER | REV |
|---|---|---|---|
| A3 | CS | 1310A22587-0 | AX1 |

SHEET 20 OF 53

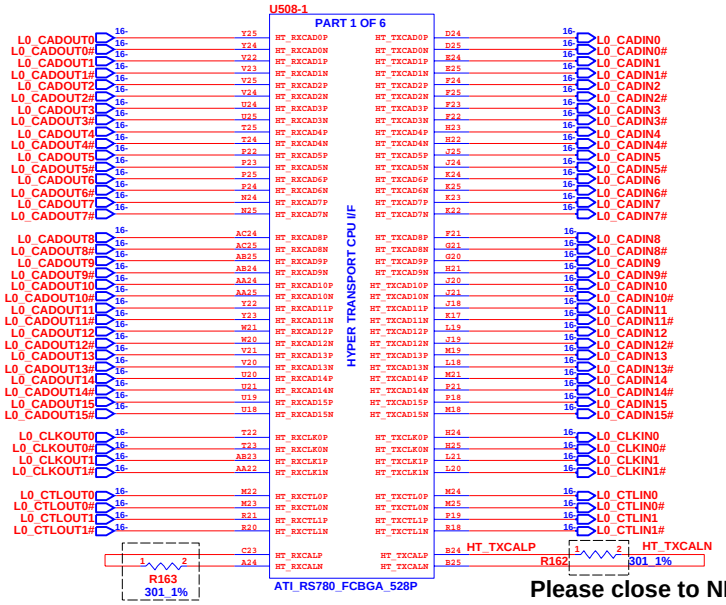


**Please close to NB balls**

**Please close to NB balls**

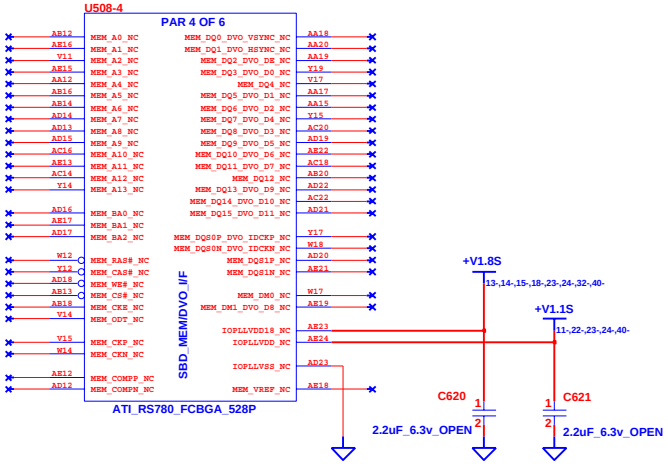


| | | | |
|---|---|---|---|
| CHANGE by | Jimmy song | 26-Dec-2008 | |

**INVENTEC**

TITLE: *Volna 09 AMD-UMA*
*RS780-1*

| SIZE | CODE | DOC. NUMBER | REV |
|---|---|---|---|
| A3 | CS | 1310A22587-0 | AX1 |

SHEET 21 OF 53

| | | | |
|---|---|---|---|
| CHANGE by | Jimmy song | 26-Dec-2008 | |

# INVENTEC

TITLE: Volna 09 AMD-UMA
RS780-2

| SIZE | CODE | DOC. NUMBER | REV |
|---|---|---|---|
| A3 | CS | 1310A22587-0 | AX1 |

SHEET 22 OF 53

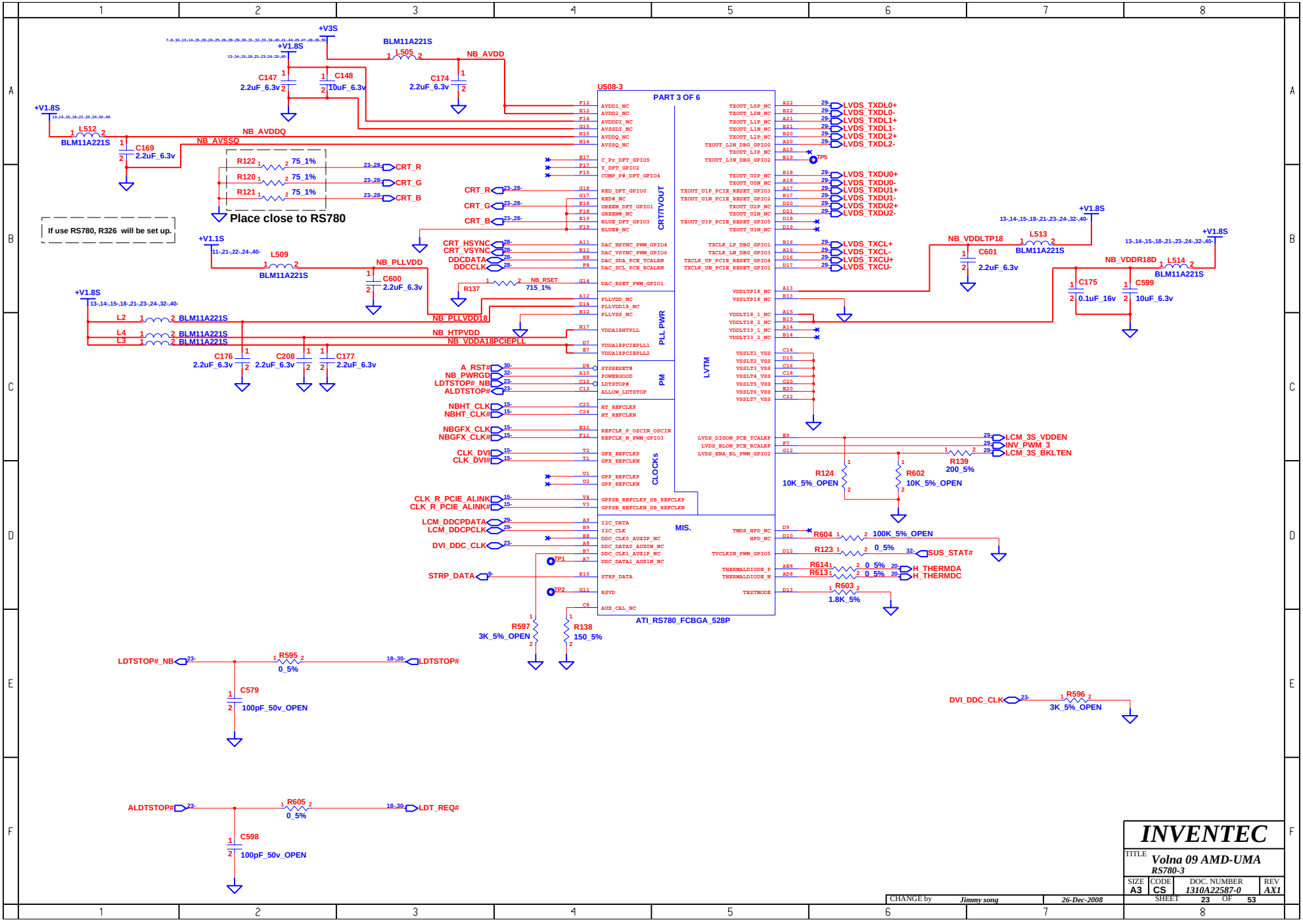
U508-3
PART 3 OF 6
ATI_RS780_FCBGA_528P
CRT/TVOUT
PLL PWR
PM
CLOCKs
MIS.
LVTM
+V3S
+V1.8S
+V1.1S
BLM11A221S
L505
L512
L509
L513
L514
NB_AVDD
NB_AVDDQ
NB_AVSSQ
NB_PLLVDD
NB_PLLVDD18
NB_HTPVDD
NB_VDDA18PCIEPLL
NB_VDDLTP18
NB_VDDR18D
C147
C148
C174
C169
C600
C601
C175
C599
C176
C208
C177
C579
C598
R122
R120
R121
R137
R597
R138
R595
R605
R596
R124
R602
R139
R604
R123
R614
R613
R603
Place close to RS780
If use RS780, R326 will be set up.
CRT_R
CRT_G
CRT_B
CRT_HSYNC
CRT_VSYNC
DDCDATA
DDCCLK
NB_RSET
A_RST#
NB_PWRGD
LDTSTOP#_NB
ALDTSTOP#
NBHT_CLK
NBHT_CLK#
NBGFX_CLK
NBGFX_CLK#
CLK_DVI
CLK_DVI#
CLK_R_PCIE_ALINK
CLK_R_PCIE_ALINK#
LCM_DDCPDATA
LCM_DDCPCLK
DVI_DDC_CLK
STRP_DATA
LVDS_TXDL0+
LVDS_TXDL0-
LVDS_TXDL1+
LVDS_TXDL1-
LVDS_TXDL2+
LVDS_TXDL2-
LVDS_TXDU0+
LVDS_TXDU0-
LVDS_TXDU1+
LVDS_TXDU1-
LVDS_TXDU2+
LVDS_TXDU2-
LVDS_TXCL+
LVDS_TXCL-
LVDS_TXCU+
LVDS_TXCU-
LCM_3S_VDDEN
INV_PWM_3
LCM_3S_BKLTEN
SUS_STAT#
H_THERMDA
H_THERMDC
LDTSTOP#
LDT_REQ#
TP1
TP2
TP5
INVENTEC
TITLE
Volna 09 AMD-UMA
RS780-3
SIZE A3
CODE CS
DOC. NUMBER 1310A22587-0
REV AX1
SHEET 23 OF 53
CHANGE by Jimmy song
26-Dec-2008

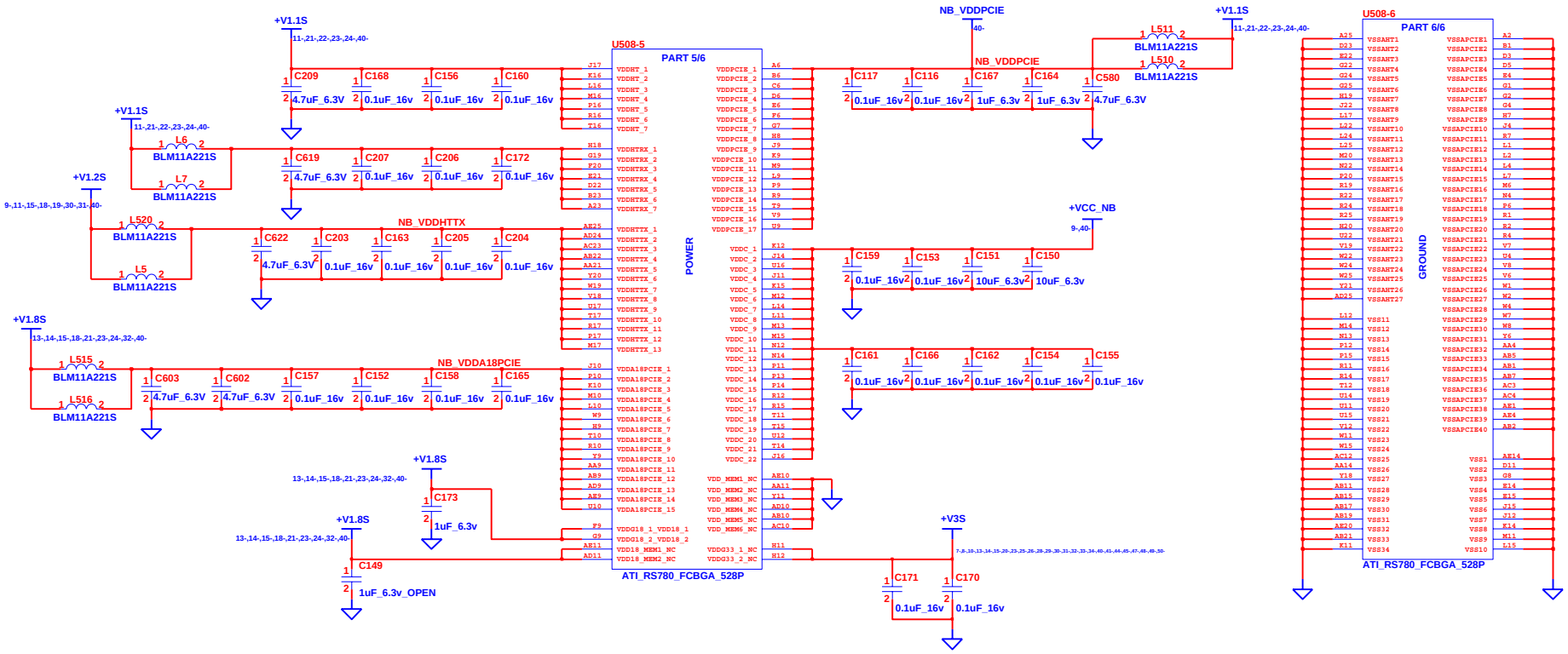


# INVENTEC

TITLE: Volna 09 AMD-UMA
RS780-4

| SIZE | CODE | DOC. NUMBER | REV |
|---|---|---|---|
| A3 | CS | 1310A22587-0 | AX1 |

SHEET 24 OF 53

CHANGE by Jimmy song 26-Dec-2008

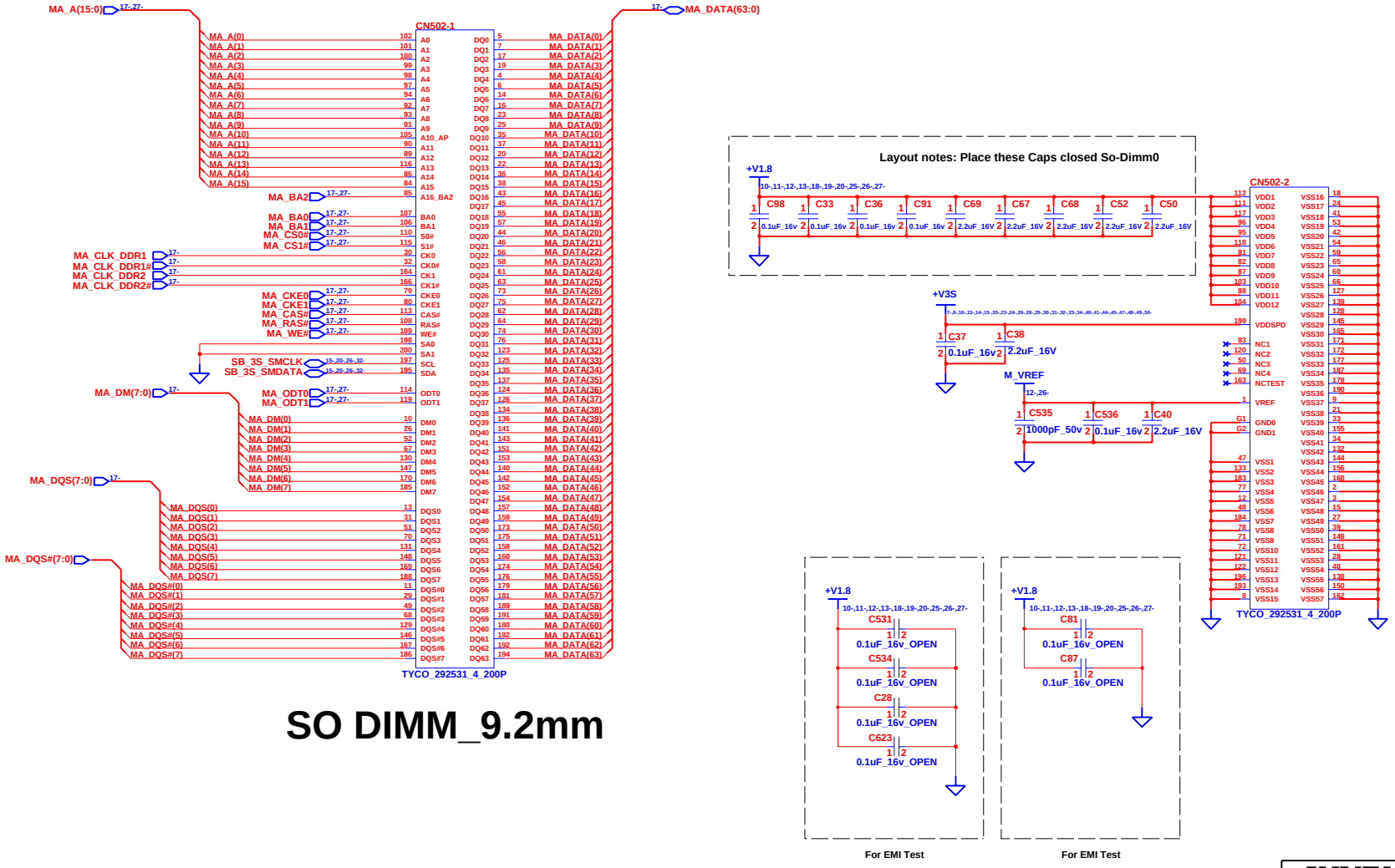


# SO DIMM_9.2mm

| | | | |
|---|---|---|---|
| CHANGE by | Jimmy song | 26-Dec-2008 | |

**INVENTEC**

TITLE: *Volna 09 AMD-UMA*
*DDR2-DIMM-0*

| SIZE | CODE | DOC. NUMBER | REV |
|---|---|---|---|
| A3 | CS | 1310A22587-0 | AX1 |

SHEET 25 OF 53

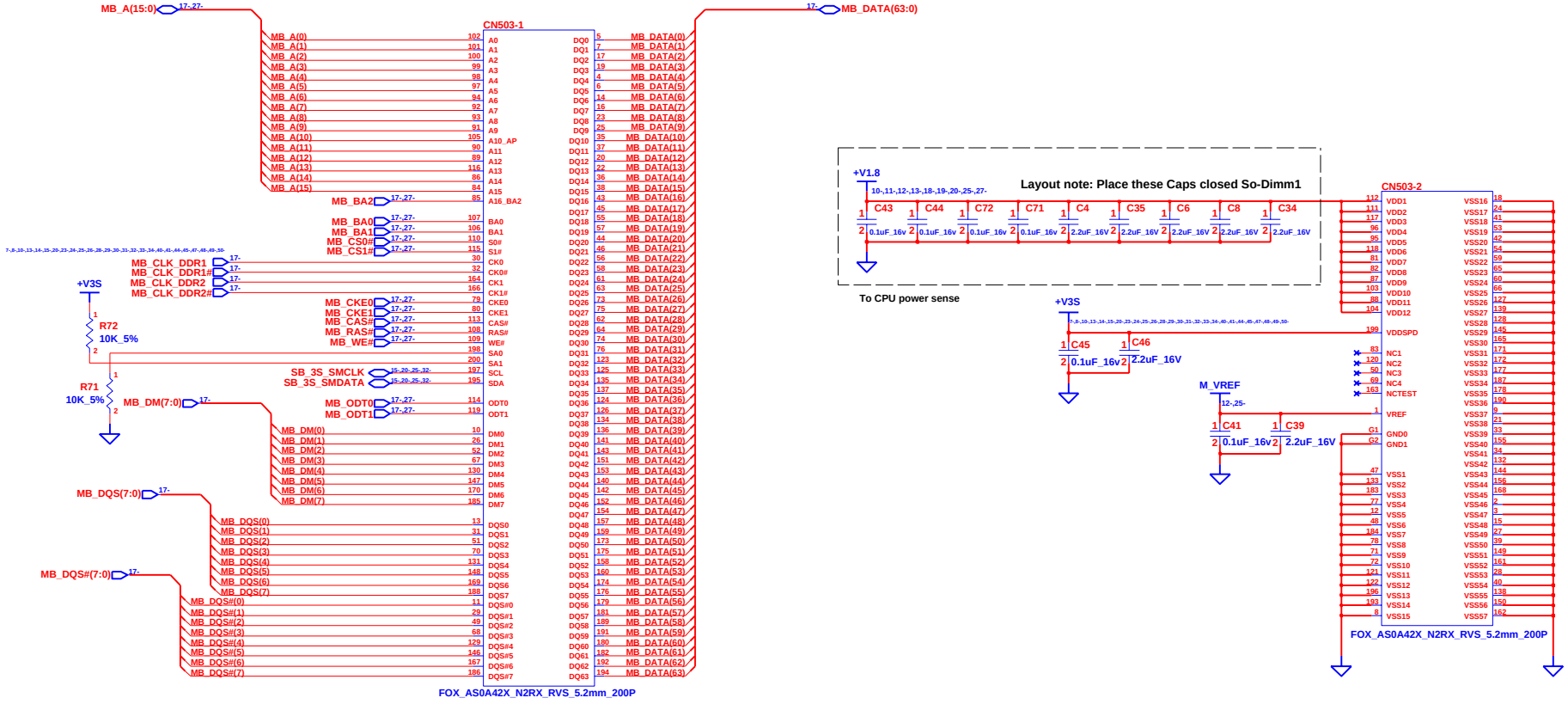


# SODIMM_5.2mm

| | | | |
|---|---|---|---|
| INVENTEC | | | |
| TITLE: Volna 09 AMD-UMA DDR2-DIMM-1 | | | |
| SIZE A3 | CODE CS | DOC. NUMBER 1310A22587-0 | REV AX1 |
| CHANGE by Jimmy song | 26-Dec-2008 | SHEET 26 OF 53 | |

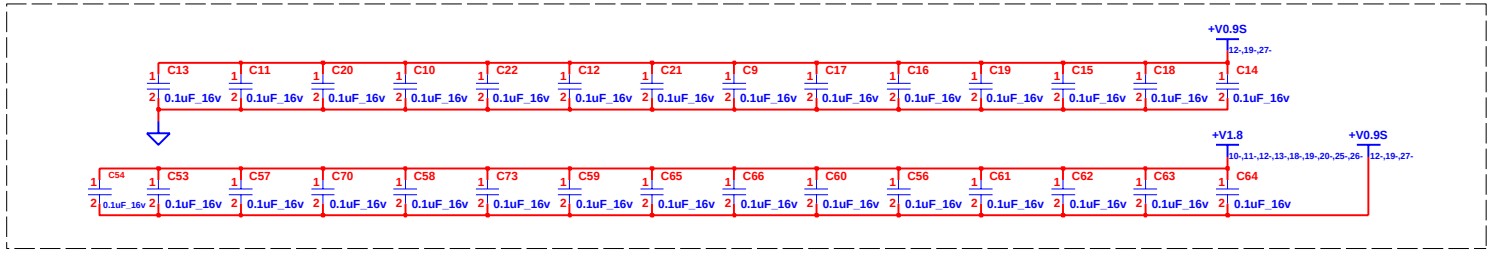


To CPU power sense

# Place CAPs close to DIMM

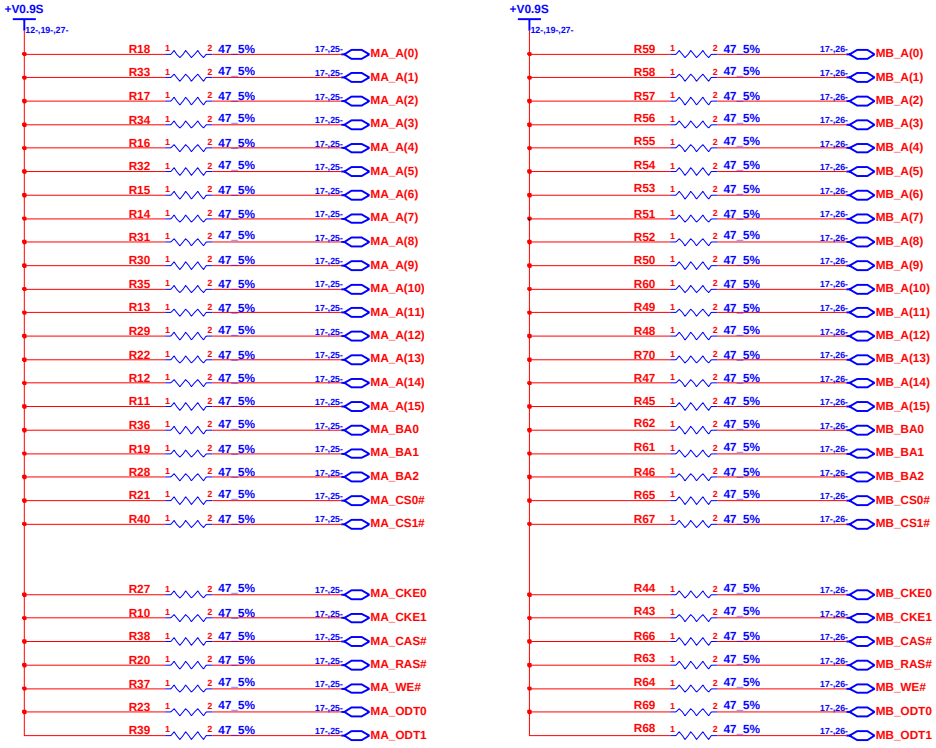


| | | | |
|---|---|---|---|
| CHANGE by | Jimmy song | 26-Dec-2008 | |

**INVENTEC**

TITLE: *Volna 09 AMD-UMA*
*DDR2-DAMPING*

| SIZE | CODE | DOC. NUMBER | REV |
|---|---|---|---|
| A3 | CS | 1310A22587-0 | AX1 |

SHEET 27 OF 53

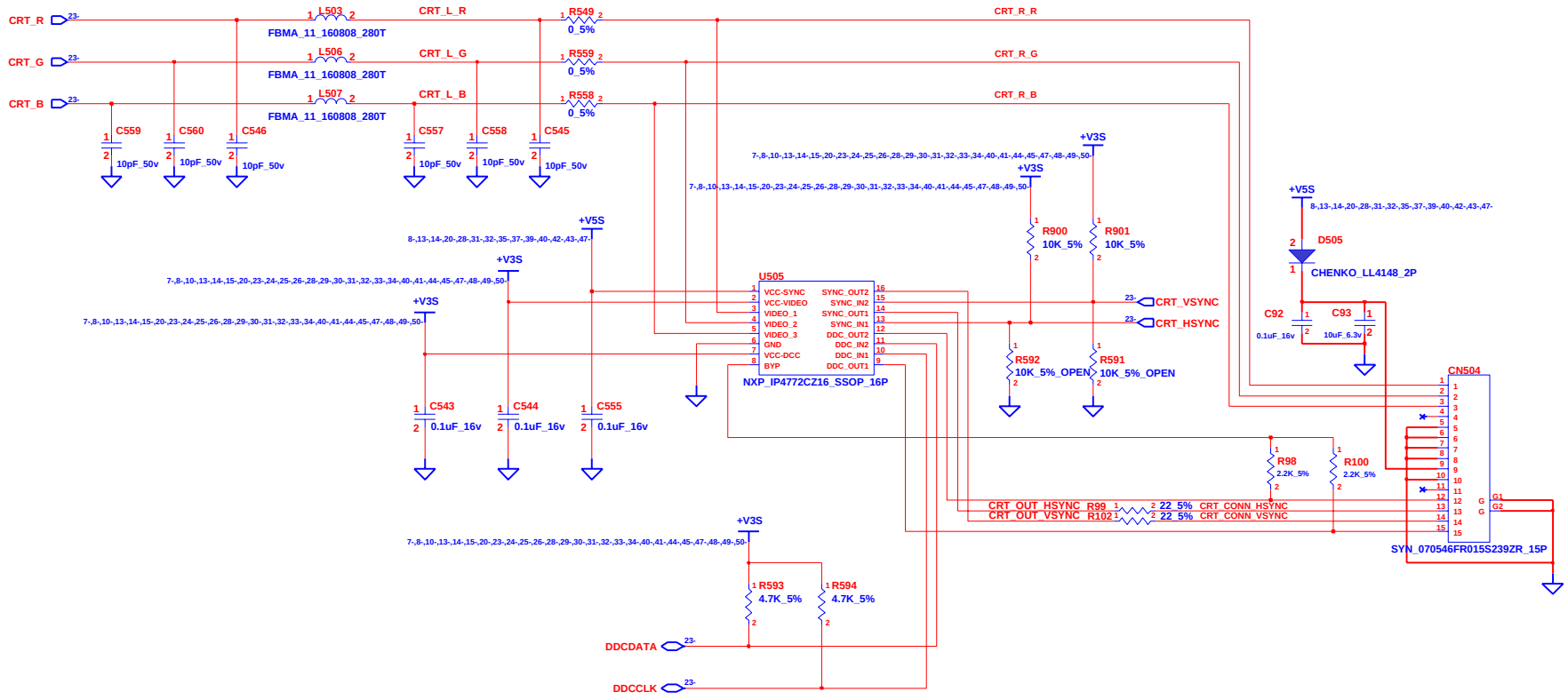


# INVENTEC

TITLE: Volna 09 AMD-UMA CRT

| SIZE | CODE | DOC. NUMBER | REV |
|---|---|---|---|
| A3 | CS | 1310A22587-0 | AX1 |

SHEET 28 OF 53

CHANGE by Jimmy song 26-Dec-2008

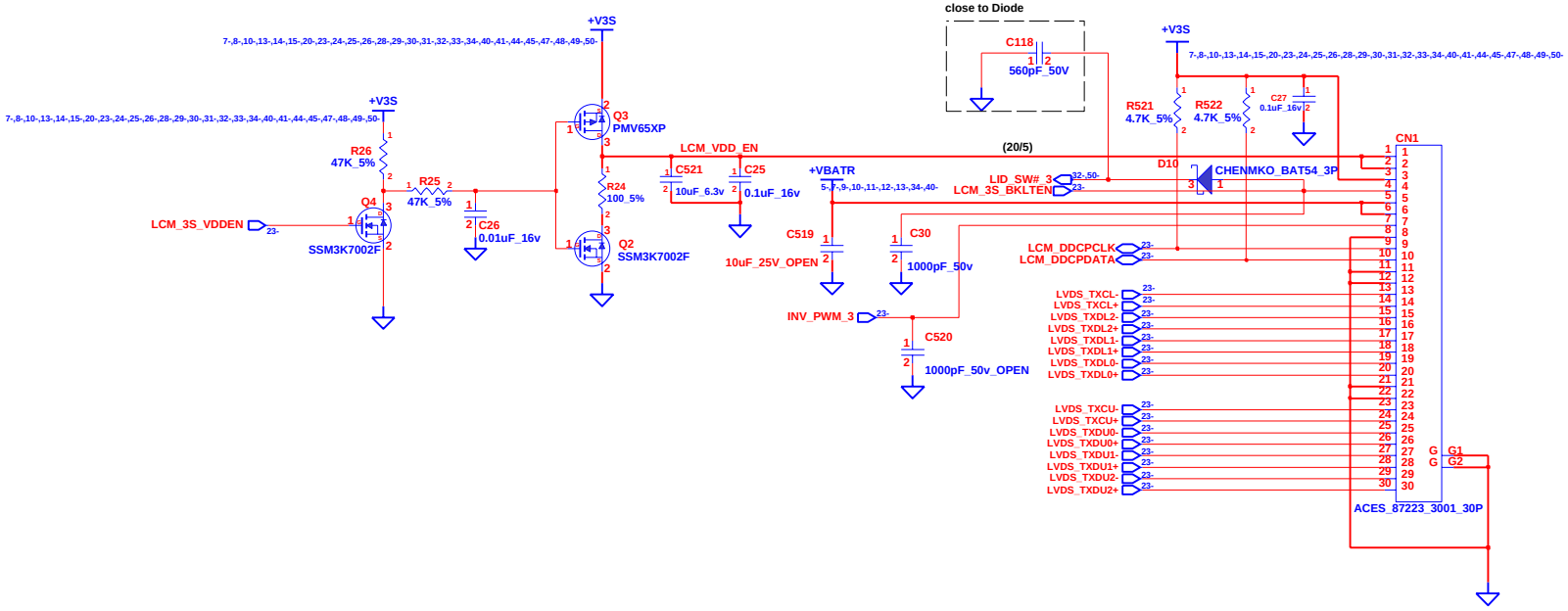


# INVENTEC

TITLE **Volna 09 AMD-UMA**
**LCD CONN**

| SIZE | CODE | DOC. NUMBER | REV |
|---|---|---|---|
| A3 | CS | 1310A22587-0 | AX1 |

SHEET 29 OF 53

| CHANGE by | Jimmy song | 26-Dec-2008 |
|---|---|---|

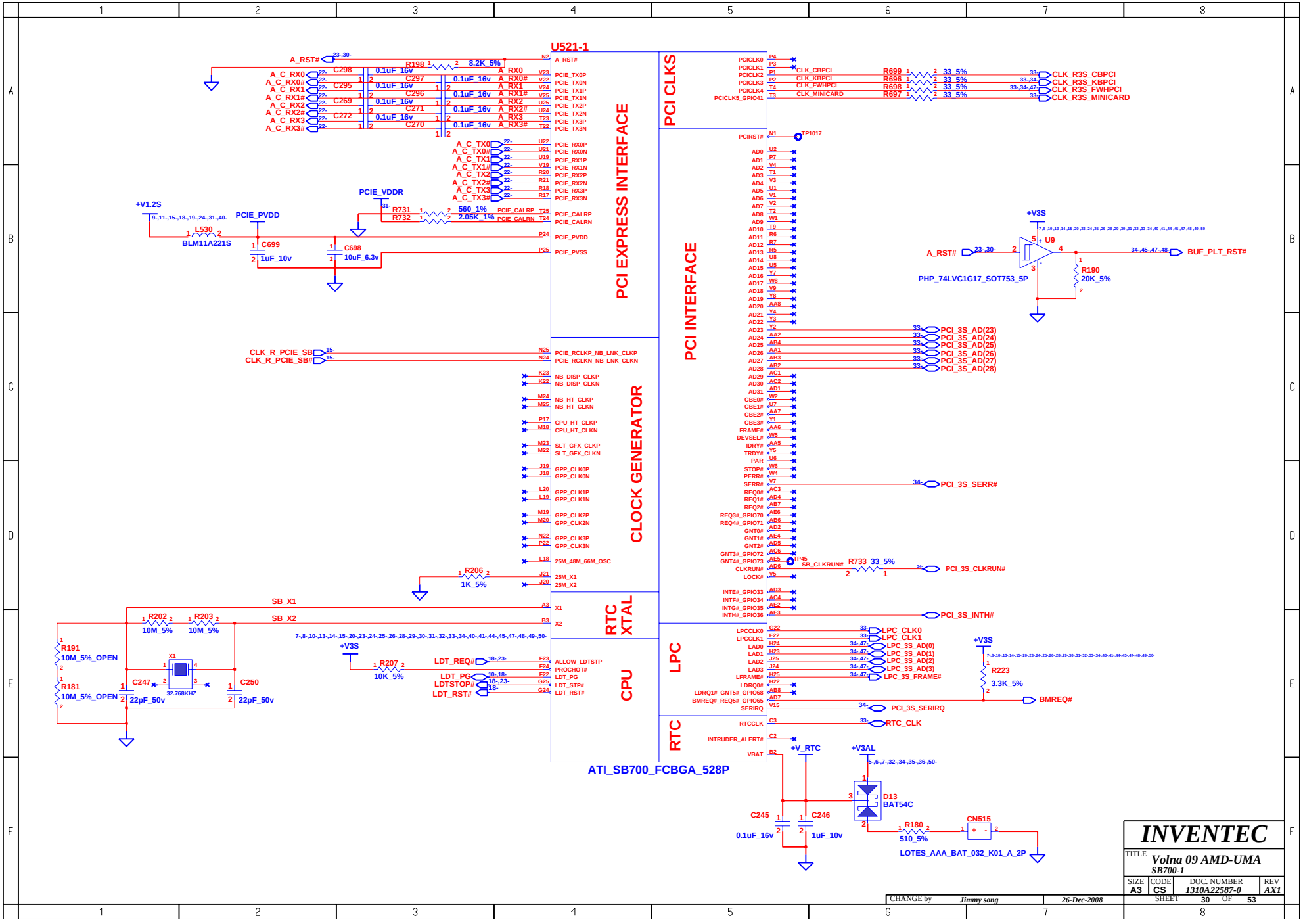
U521-1
PCI EXPRESS INTERFACE
PCI CLKS
PCI INTERFACE
CLOCK GENERATOR
RTC XTAL
CPU
LPC
RTC
ATI_SB700_FCBGA_528P
A_RST#
R198 8.2K_5%
A_C_RX0
A_C_RX0#
A_C_RX1
A_C_RX1#
A_C_RX2
A_C_RX2#
A_C_RX3
A_C_RX3#
C298 C297 C296 C295 C269 C271 C272 C270
0.1uF_16v
A_RX0
A_RX0#
A_RX1
A_RX1#
A_RX2
A_RX2#
A_RX3
A_RX3#
A_C_TX0
A_C_TX0#
A_C_TX1
A_C_TX1#
A_C_TX2
A_C_TX2#
A_C_TX3
A_C_TX3#
PCIE_VDDR
R731 560_1%
R732 2.05K_1%
PCIE_CALRP
PCIE_CALRN
+V1.2S
L530
BLM11A221S
PCIE_PVDD
C699 1uF_10v
C698 10uF_6.3v
PCIE_PVSS
CLK_R_PCIE_SB
CLK_R_PCIE_SB#
PCIE_RCLKP_NB_LNK_CLKP
PCIE_RCLKN_NB_LNK_CLKN
NB_DISP_CLKP
NB_DISP_CLKN
NB_HT_CLKP
NB_HT_CLKN
CPU_HT_CLKP
CPU_HT_CLKN
SLT_GFX_CLKP
SLT_GFX_CLKN
GPP_CLK0P
GPP_CLK0N
GPP_CLK1P
GPP_CLK1N
GPP_CLK2P
GPP_CLK2N
GPP_CLK3P
GPP_CLK3N
25M_48M_66M_OSC
R206 1K_5%
25M_X1
25M_X2
SB_X1
SB_X2
R202 10M_5%
R203 10M_5%
R191 10M_5%_OPEN
R181 10M_5%_OPEN
X1
32.768KHZ
C247 22pF_50v
C250 22pF_50v
+V3S
R207 10K_5%
LDT_REQ#
LDT_PG
LDTSTOP#
LDT_RST#
ALLOW_LDTSTP
PROCHOT#
LDT_PG
LDT_STP#
LDT_RST#
PCICLK0
PCICLK1
PCICLK2
PCICLK3
PCICLK4
PCICLK5_GPIO41
CLK_CBPCI
CLK_KBPCI
CLK_FWHPCI
CLK_MINICARD
R699 33_5%
R696 33_5%
R698 33_5%
R697 33_5%
CLK_R3S_CBPCI
CLK_R3S_KBPCI
CLK_R3S_FWHPCI
CLK_R3S_MINICARD
PCIRST#
TP1017
AD23 PCI_3S_AD(23)
AD24 PCI_3S_AD(24)
AD25 PCI_3S_AD(25)
AD26 PCI_3S_AD(26)
AD27 PCI_3S_AD(27)
AD28 PCI_3S_AD(28)
SERR# PCI_3S_SERR#
TP45
SB_CLKRUN#
R733 33_5%
CLKRUN# PCI_3S_CLKRUN#
INTE#_GPIO33
INTF#_GPIO34
INTG#_GPIO35
INTH#_GPIO36
PCI_3S_INTH#
LPCCLK0 LPC_CLK0
LPCCLK1 LPC_CLK1
LAD0 LPC_3S_AD(0)
LAD1 LPC_3S_AD(1)
LAD2 LPC_3S_AD(2)
LAD3 LPC_3S_AD(3)
LFRAME# LPC_3S_FRAME#
LDRQ0#
LDRQ1#_GNT5#_GPIO68
BMREQ#_REQ5#_GPIO65
SERIRQ PCI_3S_SERIRQ
R223 3.3K_5%
BMREQ#
RTCCLK RTC_CLK
INTRUDER_ALERT#
VBAT
+V_RTC
+V3AL
D13 BAT54C
C245 0.1uF_16v
C246 1uF_10v
R180 510_5%
CN515
LOTES_AAA_BAT_032_K01_A_2P
+V3S
U9
A_RST#
BUF_PLT_RST#
R190 20K_5%
PHP_74LVC1G17_SOT753_5P
INVENTEC
TITLE Volna 09 AMD-UMA
SB700-1
SIZE A3
CODE CS
DOC. NUMBER 1310A22587-0
REV AX1
SHEET 30 OF 53
CHANGE by Jimmy song
26-Dec-2008

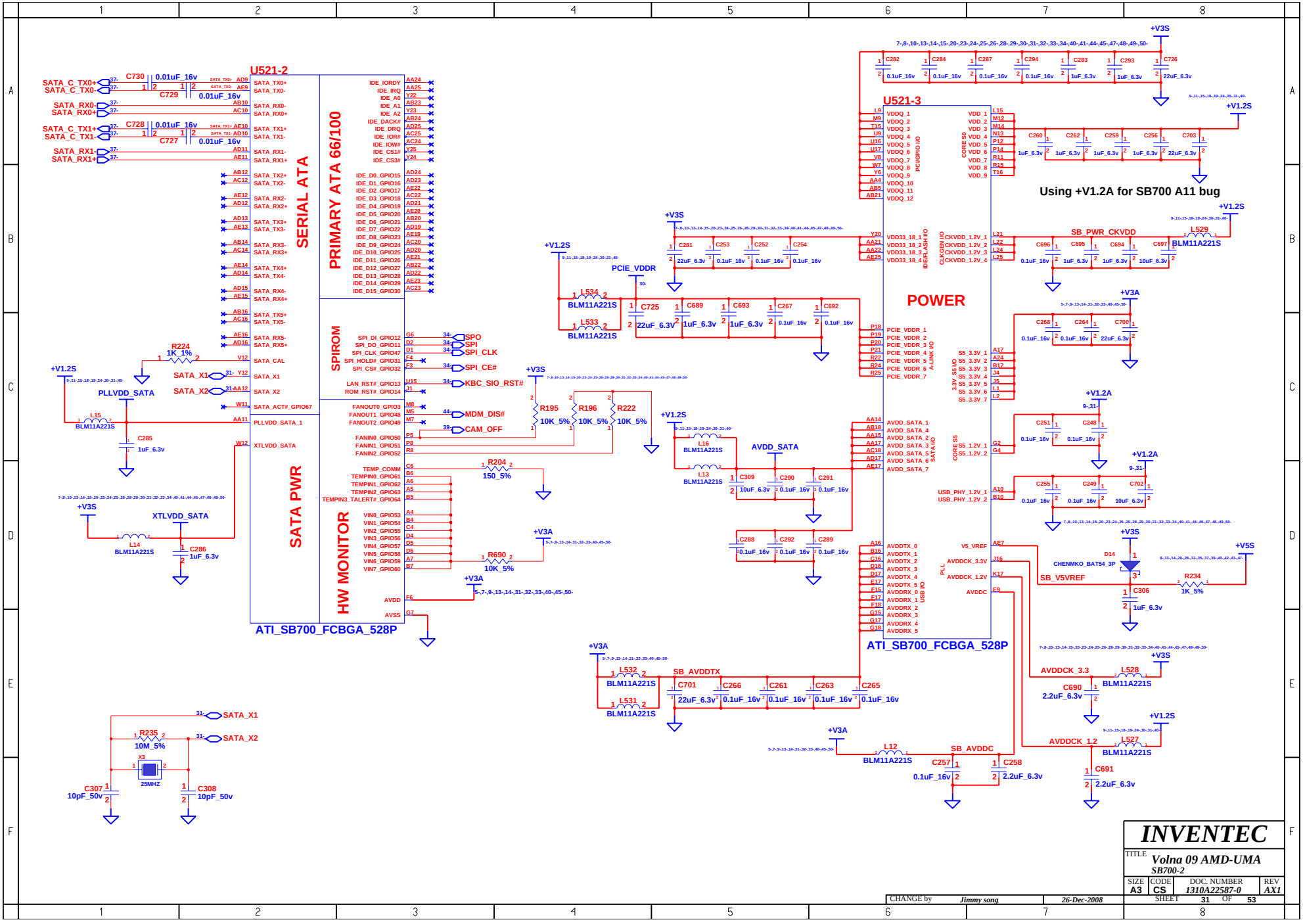
U521-2
SERIAL ATA
PRIMARY ATA 66/100
SPIROM
SATA PWR
HW MONITOR
ATI_SB700_FCBGA_528P
U521-3
POWER
ATI_SB700_FCBGA_528P
Using +V1.2A for SB700 A11 bug
SB_PWR_CKVDD
PCIE_VDDR
AVDD_SATA
SB_AVDDTX
SB_AVDDC
SB_V5VREF
AVDDCK_3.3
AVDDCK_1.2
XTLVDD_SATA
PLLVDD_SATA
SATA_X1
SATA_X2
INVENTEC
TITLE
Volna 09 AMD-UMA
SB700-2
SIZE A3
CODE CS
DOC. NUMBER 1310A22587-0
REV AX1
SHEET 31 OF 53
CHANGE by Jimmy song
26-Dec-2008

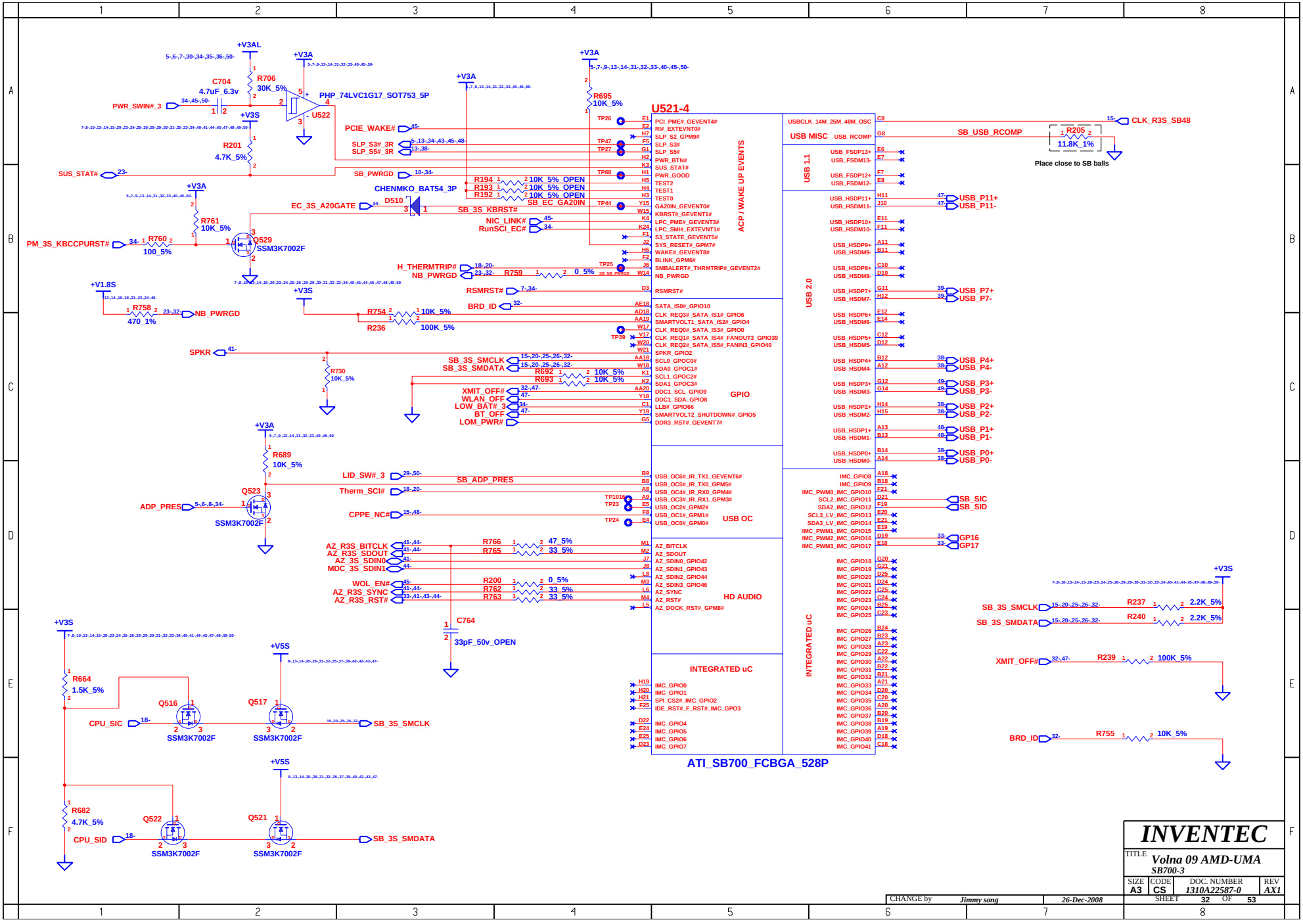
U521-4
ATI_SB700_FCBGA_528P
ACP / WAKE UP EVENTS
GPIO
USB OC
HD AUDIO
INTEGRATED uC
USB MISC
USB 1.1
USB 2.0
INTEGRATED uC
PHP_74LVC1G17_SOT753_5P
U522
CHENMKO_BAT54_3P
D510
Q529
SSM3K7002F
Q523
Q516
Q517
Q522
Q521
PCIE_WAKE#
SLP_S3#_3R
SLP_S5#_3R
SUS_STAT#
SB_PWRGD
EC_3S_A20GATE
SB_3S_KBRST#
NIC_LINK#
RunSCI_EC#
PM_3S_KBCCPURST#
H_THERMTRIP#
NB_PWRGD
RSMRST#
BRD_ID
SPKR
SB_3S_SMCLK
SB_3S_SMDATA
XMIT_OFF#
WLAN_OFF
LOW_BAT#_3
BT_OFF
LOM_PWR#
LID_SW#_3
SB_ADP_PRES
Therm_SCI#
ADP_PRES
CPPE_NC#
AZ_R3S_BITCLK
AZ_R3S_SDOUT
AZ_3S_SDIN0
MDC_3S_SDIN1
WOL_EN#
AZ_R3S_SYNC
AZ_R3S_RST#
CPU_SIC
CPU_SID
CLK_R3S_SB48
SB_USB_RCOMP
Place close to SB balls
USB_P11+
USB_P11-
USB_P7+
USB_P7-
USB_P4+
USB_P4-
USB_P3+
USB_P3-
USB_P2+
USB_P2-
USB_P1+
USB_P1-
USB_P0+
USB_P0-
SB_SIC
SB_SID
GP16
GP17
+V3AL
+V3A
+V3S
+V1.8S
+V5S
R706 30K_5%
C704 4.7uF_6.3v
R201 4.7K_5%
R761 10K_5%
R760 100_5%
R758 470_1%
R754 10K_5%
R236 100K_5%
R730 10K_5%
R689 10K_5%
R664 1.5K_5%
R682 4.7K_5%
R695 10K_5%
R194 10K_5%_OPEN
R193 10K_5%_OPEN
R192 10K_5%_OPEN
SB_EC_GA20IN
R759 0_5%
R692 10K_5%
R693 10K_5%
R766 47_5%
R765 33_5%
R200 0_5%
R762 33_5%
R763 33_5%
C764 33pF_50v_OPEN
R205 11.8K_1%
R237 2.2K_5%
R240 2.2K_5%
R239 100K_5%
R755 10K_5%
INVENTEC
TITLE Volna 09 AMD-UMA
SB700-3
SIZE A3
CODE CS
DOC. NUMBER 1310A22587-0
REV AX1
SHEET 32 OF 53
CHANGE by Jimmy song
26-Dec-2008

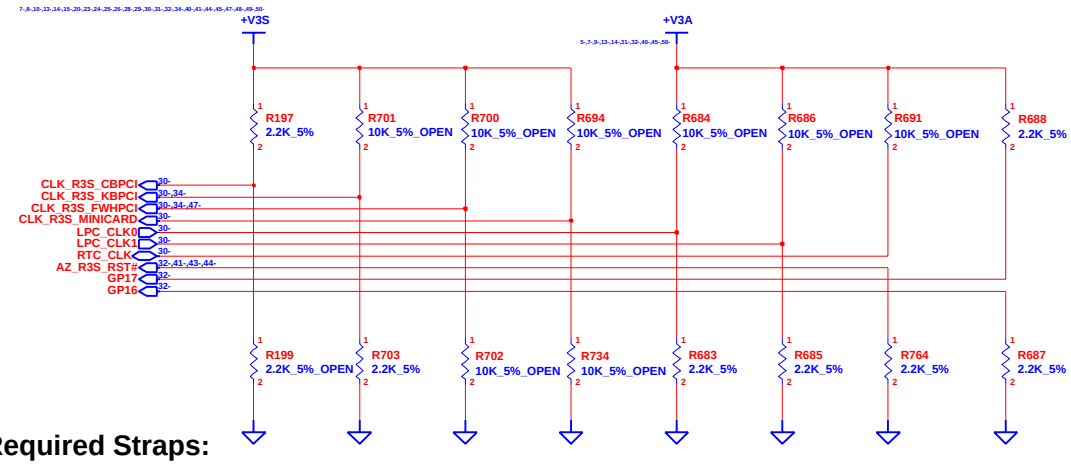


## Required Straps:

| | CLK_R3S_CBPCI | CLK_R3S_KBPCI | CLK_R3S_FWHPCI | CLK_R3S _MINICARD | LPC_CLK0 | LPC_CLK1 | RTC_CLK | AZ_RST# | GP17 GP16 |
|---|---|---|---|---|---|---|---|---|---|
| **PULL HIGH** | BOOTFAIL TIMER ENABLED | USE DEBUG STRAPS | RESERVED | RESERVED | ENABLE PCI MEM BOOT | CLKGEN ENABLED | INTERNAL RTC DEFAULT | EC ENABLED | ROM TYPE<br>H, H = Reserved<br>H, L = SPI ROM<br>L, H = LPC ROM<br>L, L = FWH ROM |
| **PULL LOW** | BOOTFAIL TIMER DISABLED DEFAULT | IGNORE DEBUG STRAPS DEFAULT | | | DISABLE PCI MEM BOOT DEFAULT | CLKGEN DISABLED DEFAULT | EXT. RTC (PD on X1, apply 32KHz to RTC_CLK | EC DISABLED DEFAULT | |

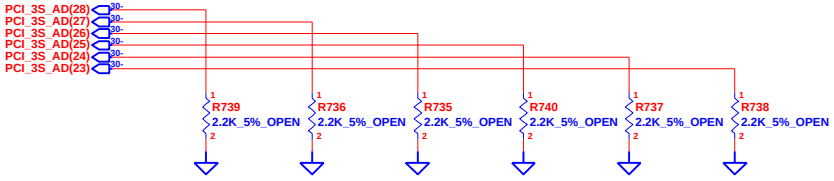


## Debug Straps

SB700 HAS 15K INTERNAL PU FOR PCI_AD

| | PCI_3S_AD(28) | PCI_3S_AD(27) | PCI_3S_AD(26) | PCI_3S_AD(25) | PCI_3S_AD(24) | PCI_3S_ AD(23) |
|---|---|---|---|---|---|---|
| **PULL HIGH** | USE LONG RESET DEFAULT | USE PCI PLL DEFAULT | USE ACPI BCLK DEFAULT | USE IDE PLL DEFAULT | USE DEFAULT PCIE STRAPS DEFAULT | RESERVED |
| **PULL LOW** | USE SHORT RESET | BYPASS PCI PLL | BYPASS ACPI BCLK | BYPASS IDE PLL | USE EEPROM PCIE STRAPS | |

| CHANGE by | Jimmy song | 26-Dec-2008 |
|---|---|---|

**INVENTEC**

TITLE: *Volna 09 AMD-UMA*
*SB700-4*

| SIZE | CODE | DOC. NUMBER | REV |
|---|---|---|---|
| A3 | CS | 1310A22587-0 | AX1 |

SHEET 33 OF 53

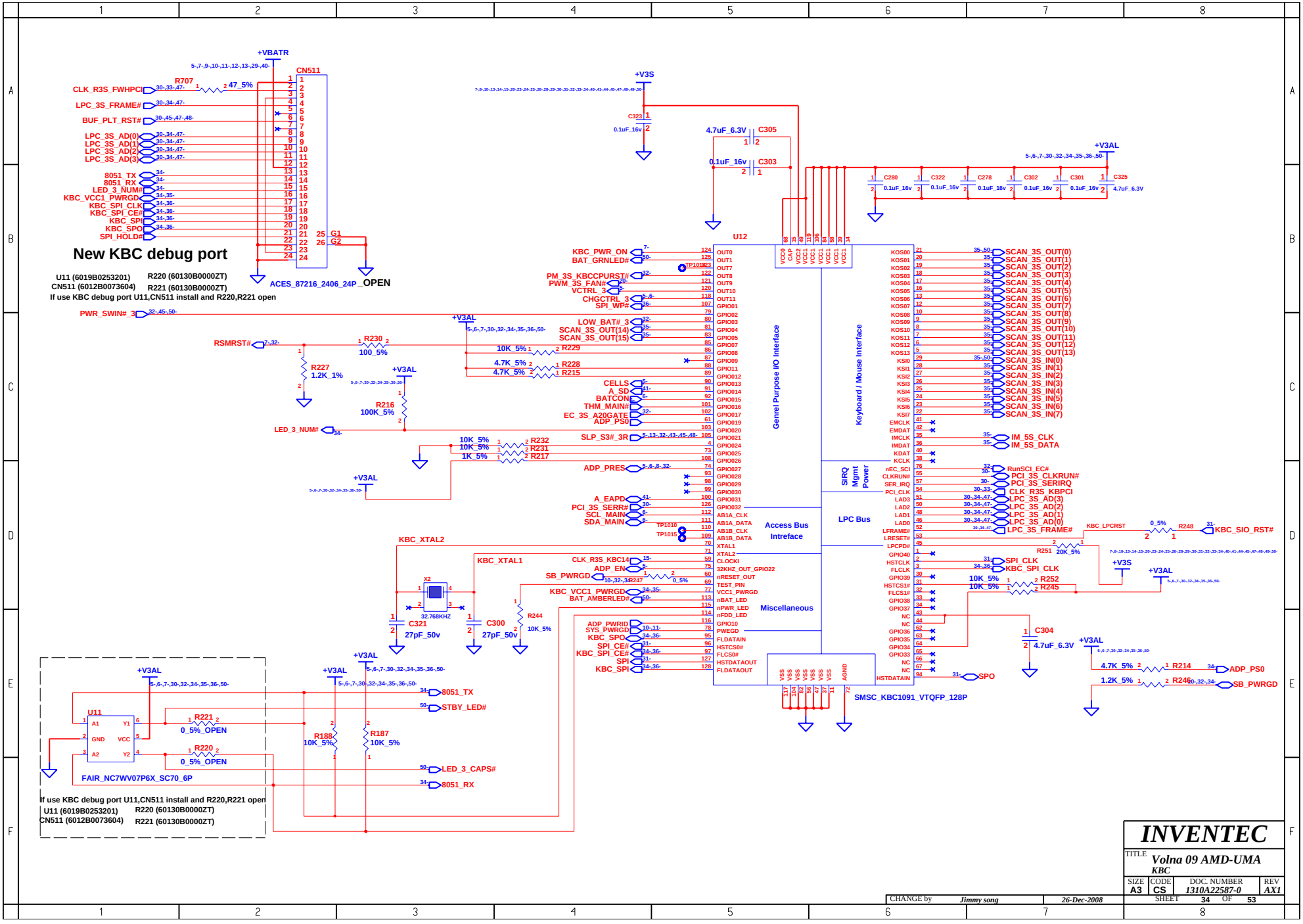
New KBC debug port
U11 (6019B0253201) R220 (60130B0000ZT)
CN511 (6012B0073604) R221 (60130B0000ZT)
If use KBC debug port U11,CN511 install and R220,R221 open
ACES_87216_2406_24P_OPEN
FAIR_NC7WV07P6X_SC70_6P
SMSC_KBC1091_VTQFP_128P
Genrel Purpose I/O Interface
Keyboard / Mouse Interface
Access Bus Intreface
LPC Bus
Miscellaneous
INVENTEC
Volna 09 AMD-UMA
KBC
SIZE A3
CODE CS
DOC. NUMBER 1310A22587-0
REV AX1
SHEET 34 OF 53
CHANGE by Jimmy song
26-Dec-2008

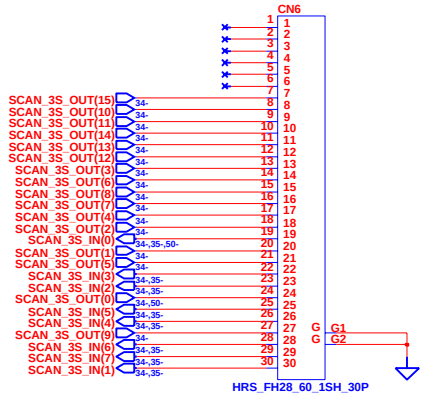


**KEYBOARD CONN**

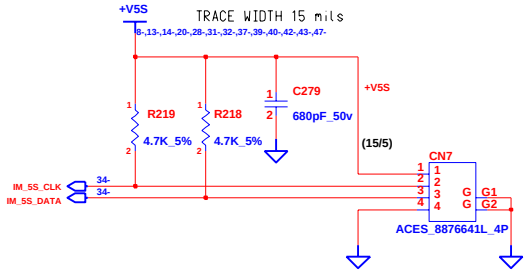


**TOUCH PAD CNTR**

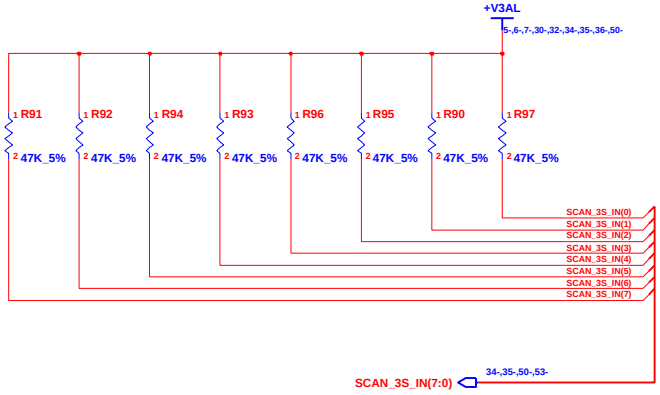


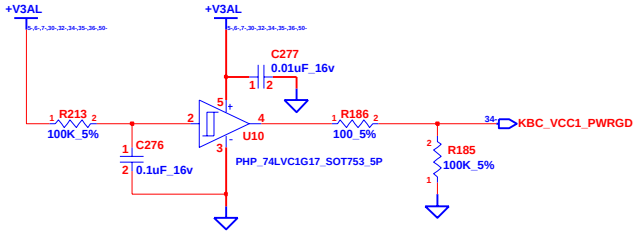


**U35 should be placed close to U39.**

| | | | |
|---|---|---|---|
| CHANGE by | *Jimmy song* | *26-Dec-2008* | |

# INVENTEC

TITLE *Volna 09 AMD-UMA*
KB&TP CONN

| SIZE | CODE | DOC. NUMBER | REV |
|---|---|---|---|
| A3 | CS | *1310A22587-0* | *AX1* |

SHEET 35 OF 53

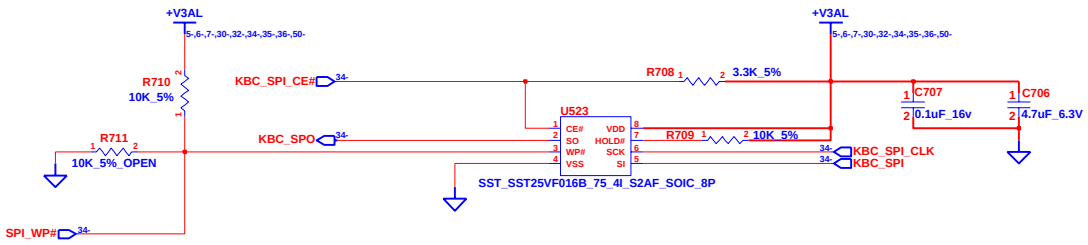


# SPI Flash

| | | | |
|---|---|---|---|
| CHANGE by | Jimmy song | 26-Dec-2008 | |

**INVENTEC**

TITLE *Volna 09 AMD-UMA*
*SPI*

| SIZE | CODE | DOC. NUMBER | REV |
|---|---|---|---|
| A3 | CS | 1310A22587-0 | AX1 |

SHEET 36 OF 53

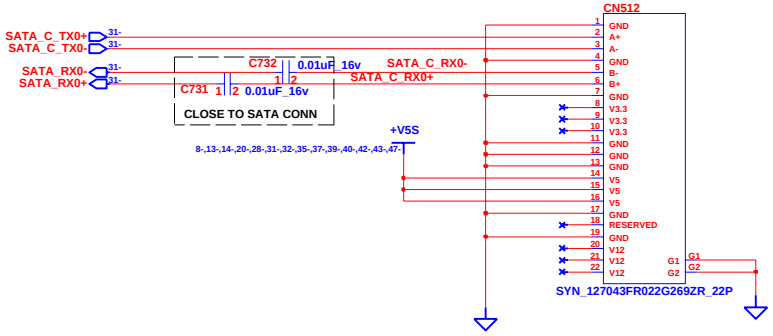


# HDD CONNECTOR

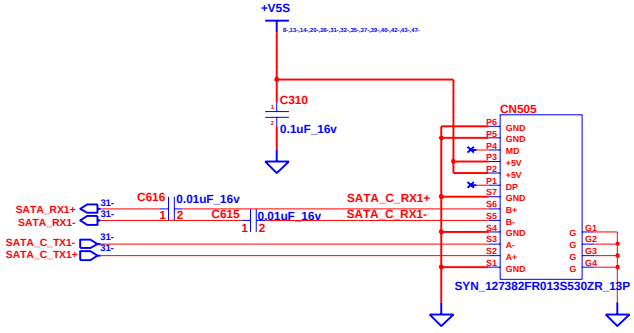


# ODD SATA CONNECTOR

| | | | |
|---|---|---|---|
| CHANGE by | Jimmy song | 26-Dec-2008 | |

**INVENTEC**

TITLE *Volna 09 AMD-UMA*
*HDD & ODD CONN*

| SIZE | CODE | DOC. NUMBER | REV |
|---|---|---|---|
| A3 | CS | 1310A22587-0 | AX1 |

SHEET 37 OF 53

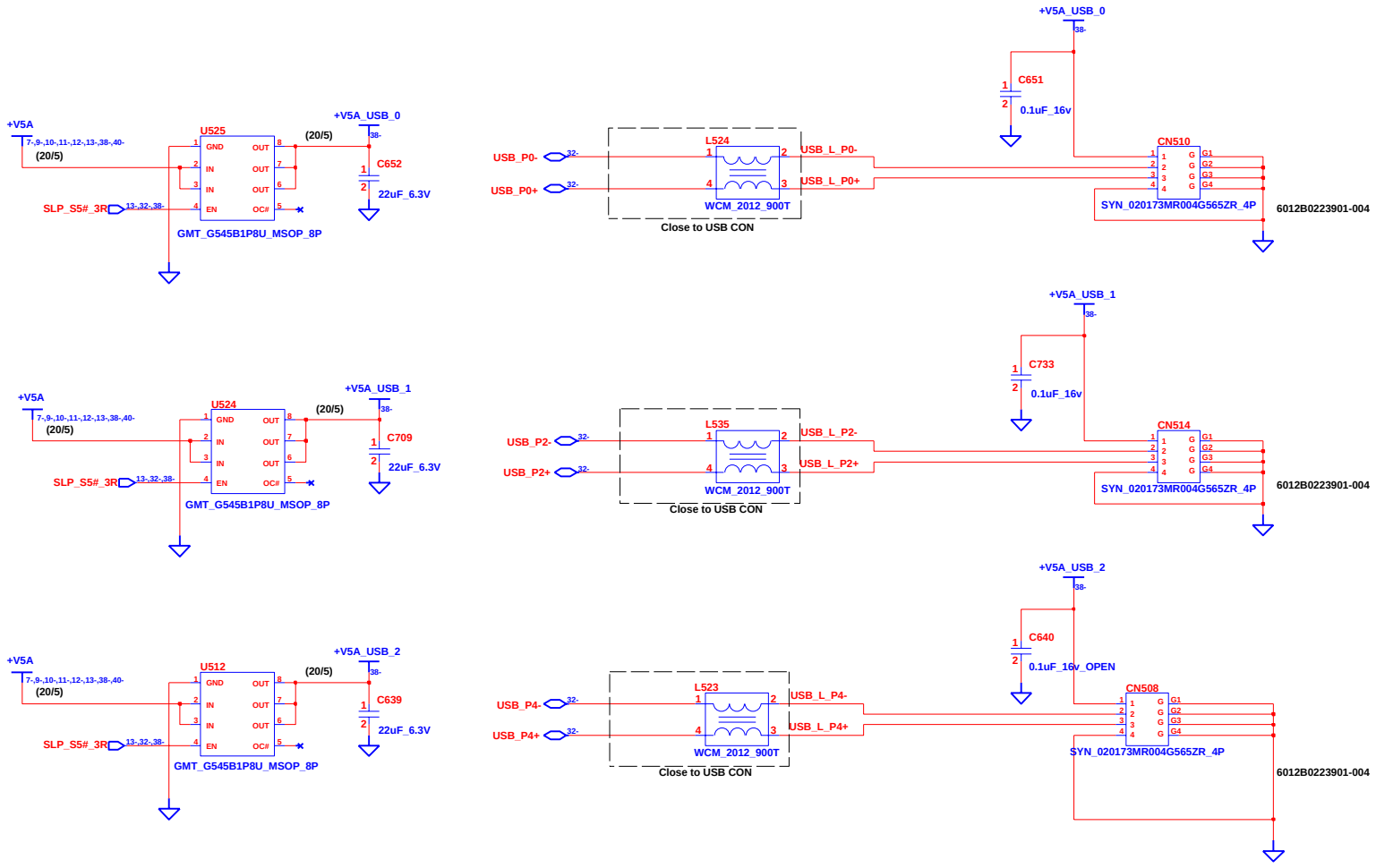


# INVENTEC

TITLE *Volna 09 AMD-UMA*
*USB CONN*

| SIZE | CODE | DOC. NUMBER | REV |
|---|---|---|---|
| A3 | CS | *1310A22587-0* | *AX1* |

SHEET 38 OF 53

| CHANGE by | | |
|---|---|---|
| | *Jimmy song* | *26-Dec-2008* |

(At least 20mils.)

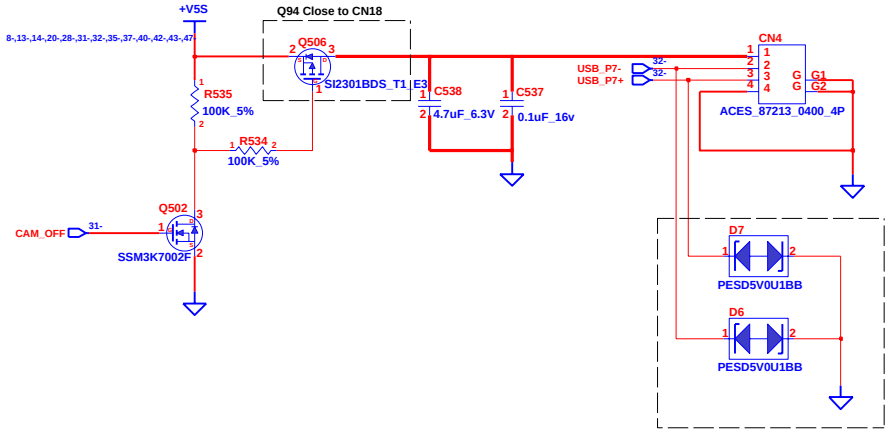


close to CN5

# USB WEBCAM CONNECTOR

| | | | |
|---|---|---|---|
| CHANGE by | Jimmy song | 26-Dec-2008 | |

**INVENTEC**

TITLE *Volna 09 AMD-UMA*
*USB WEBCAM CONN*

| SIZE | CODE | DOC. NUMBER | REV |
|---|---|---|---|
| A3 | CS | 1310A22587-0 | AX1 |

SHEET 39 OF 53

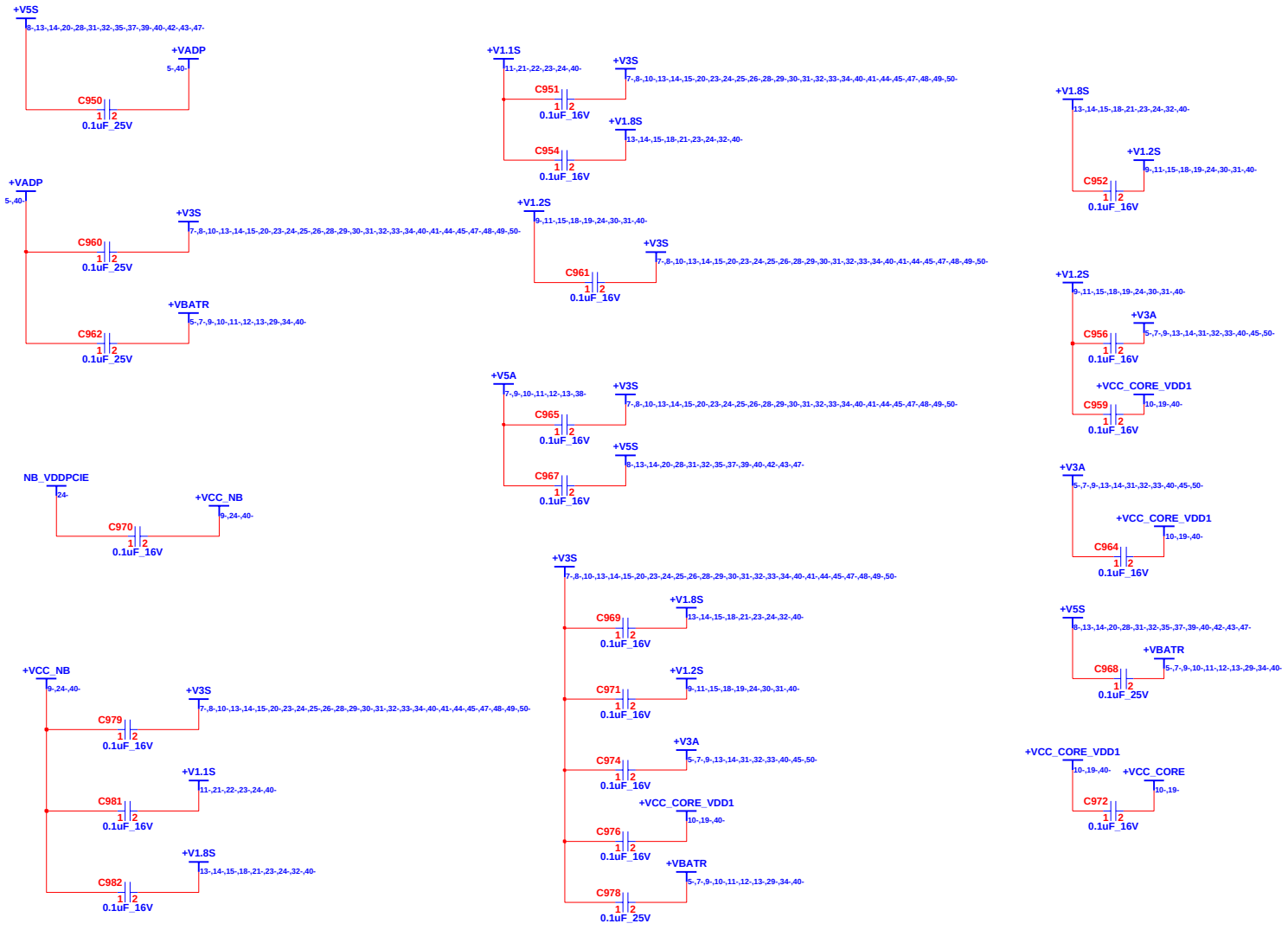


| | | | |
|---|---|---|---|
| CHANGE by | Jimmy song | 26-Dec-2008 | |

# INVENTEC

TITLE: Volna 09 AMD-UMA
EMI

| SIZE | CODE | DOC. NUMBER | REV |
|---|---|---|---|
| A3 | CS | 1310A22587-0 | AX1 |

SHEET 40 OF 53

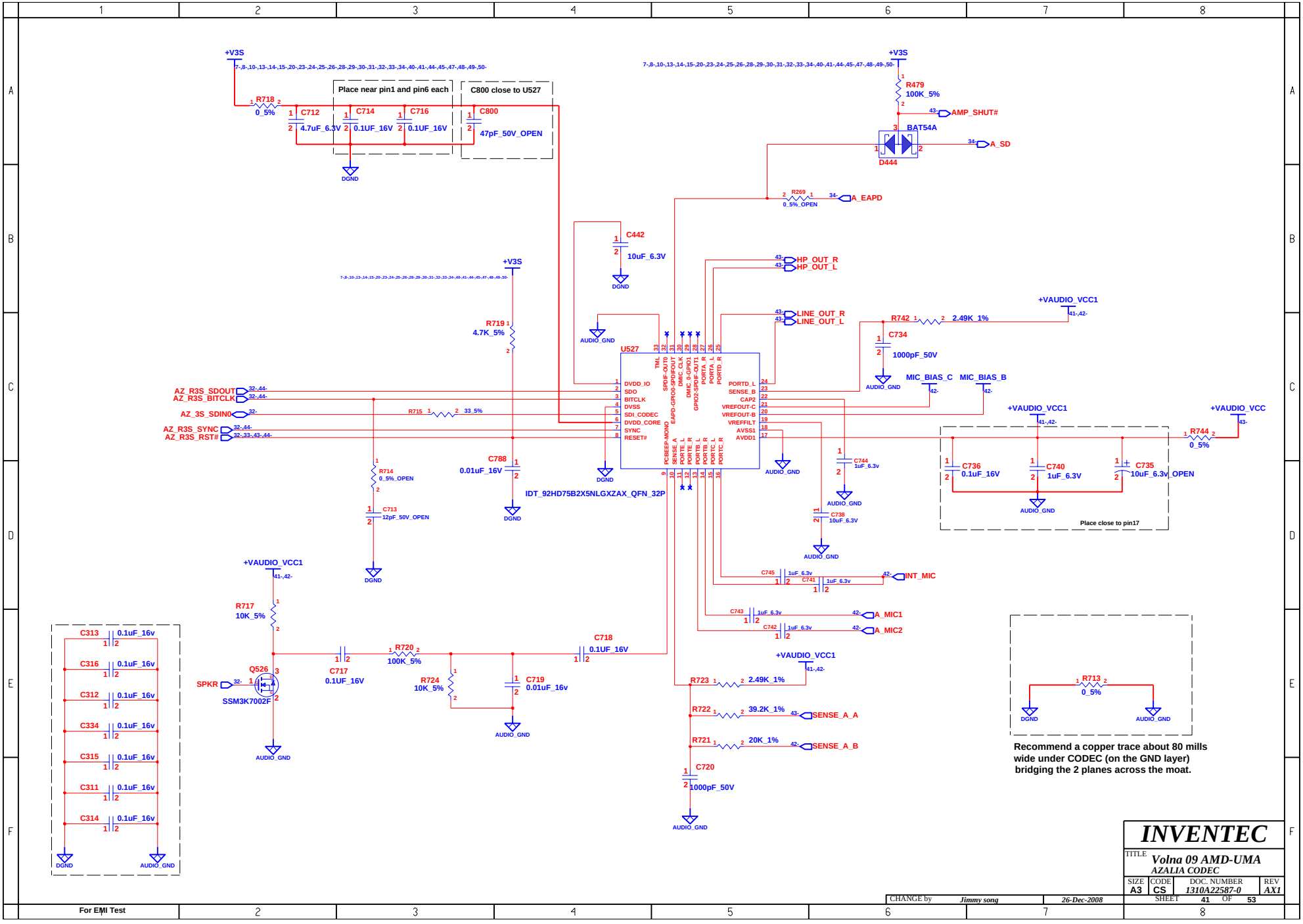
+V3S
R718 0_5%
C712 4.7uF_6.3V
C714 0.1UF_16V
C716 0.1UF_16V
Place near pin1 and pin6 each
C800 close to U527
C800 47pF_50V_OPEN
DGND
R479 100K_5%
AMP_SHUT#
BAT54A
D444
A_SD
R269 0_5%_OPEN
A_EAPD
C442 10uF_6.3V
HP_OUT_R
HP_OUT_L
LINE_OUT_R
LINE_OUT_L
+VAUDIO_VCC1
R742 2.49K_1%
C734 1000pF_50V
MIC_BIAS_C
MIC_BIAS_B
AUDIO_GND
R719 4.7K_5%
U527
AZ_R3S_SDOUT
AZ_R3S_BITCLK
AZ_3S_SDIN0
AZ_R3S_SYNC
AZ_R3S_RST#
R715 33_5%
DVDD_IO
SDO
BITCLK
DVSS
SDI_CODEC
DVDD_CORE
SYNC
RESET#
PORTD_L
SENSE_B
CAP2
VREFOUT-C
VREFOUT-B
VREFFILT
AVSS1
AVDD1
+VAUDIO_VCC
R744 0_5%
C736 0.1uF_16V
C740 1uF_6.3V
C735 10uF_6.3v_OPEN
Place close to pin17
C744 1uF_6.3v
C738 10uF_6.3V
C788 0.01uF_16V
R714 0_5%_OPEN
C713 12pF_50V_OPEN
IDT_92HD75B2X5NLGXZAX_QFN_32P
C745 1uF_6.3v
C741 1uF_6.3v
INT_MIC
C743 1uF_6.3v
A_MIC1
C742 1uF_6.3v
A_MIC2
R717 10K_5%
C313 0.1uF_16v
C316 0.1uF_16v
C312 0.1uF_16v
C334 0.1uF_16v
C315 0.1uF_16v
C311 0.1uF_16v
C314 0.1uF_16v
SPKR
Q526
SSM3K7002F
C717 0.1UF_16V
R720 100K_5%
R724 10K_5%
C719 0.01uF_16v
C718 0.1UF_16V
R723 2.49K_1%
R722 39.2K_1%
SENSE_A_A
R721 20K_1%
SENSE_A_B
C720 1000pF_50V
R713 0_5%
Recommend a copper trace about 80 mills wide under CODEC (on the GND layer) bridging the 2 planes across the moat.
INVENTEC
TITLE Volna 09 AMD-UMA
AZALIA CODEC
SIZE A3
CODE CS
DOC. NUMBER 1310A22587-0
REV AX1
SHEET 41 OF 53
CHANGE by Jimmy song
26-Dec-2008
For EMI Test

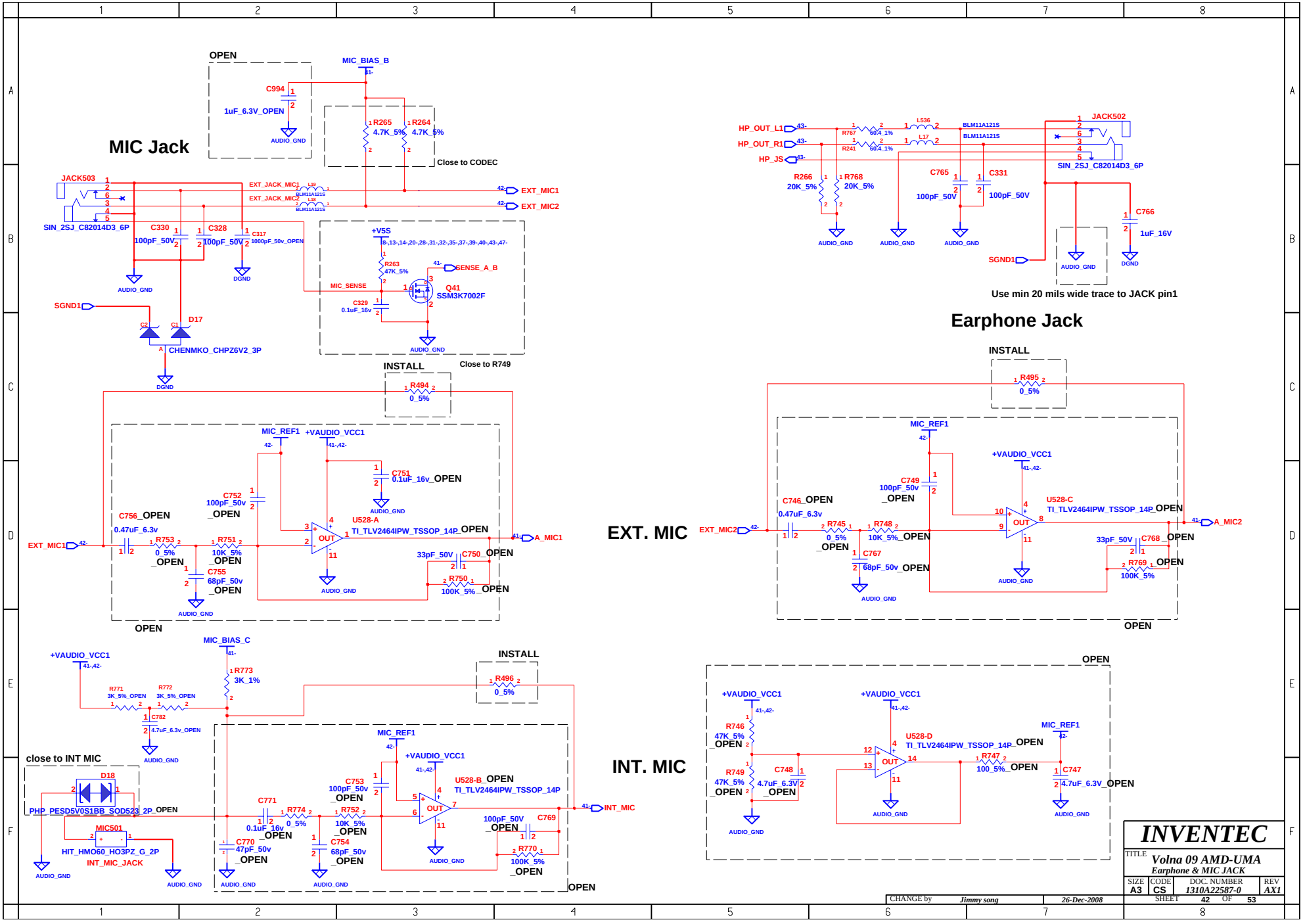
MIC Jack
OPEN
MIC_BIAS_B
C994
1uF_6.3V_OPEN
AUDIO_GND
R265
4.7K_5%
R264
4.7K_5%
Close to CODEC
JACK503
SIN_2SJ_C82014D3_6P
EXT_JACK_MIC1
EXT_JACK_MIC2
L39
L38
BLM11A121S
EXT_MIC1
EXT_MIC2
C330
100pF_50V
C328
100pF_50V
C317
1000pF_50v_OPEN
DGND
+V5S
R263
47K_5%
SENSE_A_B
MIC_SENSE
Q41
SSM3K7002F
C329
0.1uF_16v
SGND1
D17
CHENMKO_CHPZ6V2_3P
INSTALL
Close to R749
R494
0_5%
MIC_REF1
+VAUDIO_VCC1
C751
0.1uF_16v_OPEN
C752
100pF_50v
_OPEN
C756_OPEN
0.47uF_6.3v
R753
0_5%
_OPEN
R751
10K_5%
_OPEN
C755
68pF_50v
_OPEN
U528-A
TI_TLV2464IPW_TSSOP_14P_OPEN
A_MIC1
33pF_50V
C750_OPEN
R750
100K_5%_OPEN
OPEN
HP_OUT_L1
HP_OUT_R1
HP_JS
R767
60.4_1%
R241
60.4_1%
L536
L17
JACK502
R266
20K_5%
R768
20K_5%
C765
100pF_50V
C331
100pF_50V
C766
1uF_16V
Use min 20 mils wide trace to JACK pin1
Earphone Jack
EXT. MIC
EXT_MIC2
A_MIC2
C746_OPEN
0.47uF_6.3v
R745
0_5%
_OPEN
R748
10K_5%_OPEN
C749
100pF_50v
_OPEN
C767
68pF_50v_OPEN
U528-C
TI_TLV2464IPW_TSSOP_14P_OPEN
33pF_50V
C768_OPEN
R769
100K_5%
_OPEN
INT. MIC
+VAUDIO_VCC1
MIC_BIAS_C
R773
3K_1%
R771
3K_5%_OPEN
R772
3K_5%_OPEN
C782
4.7uF_6.3v_OPEN
close to INT MIC
D18
PHP_PESD5V0S1BB_SOD523_2P_OPEN
MIC501
HIT_HMO60_HO3PZ_G_2P
INT_MIC_JACK
C771
0.1uF_16v
_OPEN
R774
0_5%
C770
47pF_50v
_OPEN
C753
100pF_50v
_OPEN
R752
10K_5%
_OPEN
C754
68pF_50v
_OPEN
U528-B_OPEN
TI_TLV2464IPW_TSSOP_14P
INT_MIC
100pF_50V
_OPEN
C769
R770
100K_5%
_OPEN
R496
0_5%
R746
47K_5%
_OPEN
R749
47K_5%
_OPEN
C748
4.7uF_6.3V
_OPEN
U528-D
TI_TLV2464IPW_TSSOP_14P_OPEN
R747
100_5%_OPEN
C747
4.7uF_6.3V_OPEN
INVENTEC
Volna 09 AMD-UMA
Earphone & MIC JACK
SIZE A3
CODE CS
DOC. NUMBER 1310A22587-0
REV AX1
SHEET 42 OF 53
CHANGE by Jimmy song
26-Dec-2008

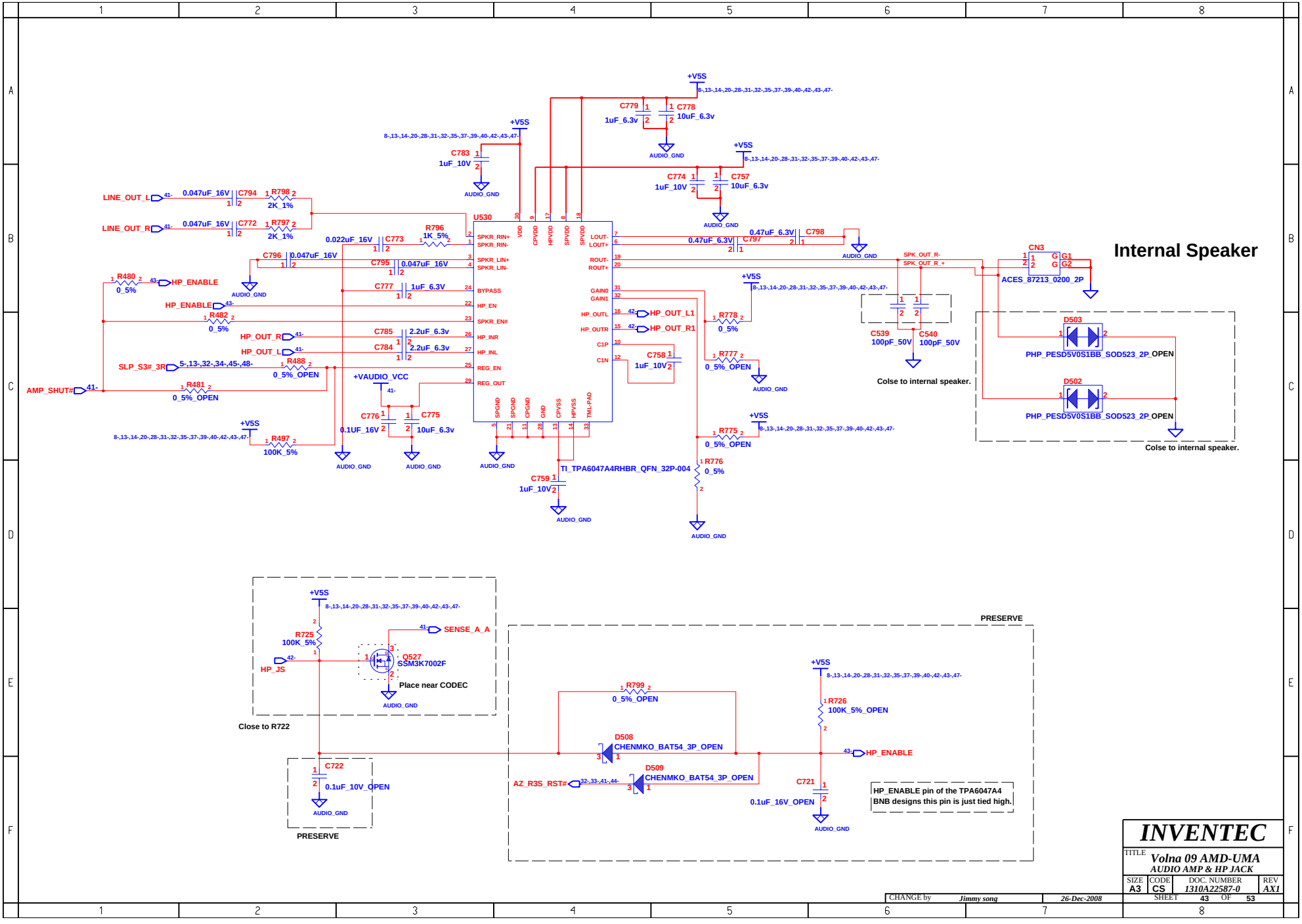
Internal Speaker
U530
TI_TPA6047A4RHBR_QFN_32P-004
CN3
ACES_87213_0200_2P
D503
PHP_PESD5V0S1BB_SOD523_2P_OPEN
D502
PHP_PESD5V0S1BB_SOD523_2P_OPEN
Colse to internal speaker.
Colse to internal speaker.
LINE_OUT_L
LINE_OUT_R
HP_ENABLE
HP_OUT_R
HP_OUT_L
HP_OUT_L1
HP_OUT_R1
SLP_S3#_3R
AMP_SHUT#
+VAUDIO_VCC
SPK_OUT_R-
SPK_OUT_R_+
AUDIO_GND
+V5S
Q527
SSM3K7002F
Place near CODEC
Close to R722
SENSE_A_A
HP_JS
PRESERVE
D508
CHENMKO_BAT54_3P_OPEN
D509
CHENMKO_BAT54_3P_OPEN
AZ_R3S_RST#
HP_ENABLE
HP_ENABLE pin of the TPA6047A4
BNB designs this pin is just tied high.
INVENTEC
Volna 09 AMD-UMA
AUDIO AMP & HP JACK
SIZE A3
CODE CS
DOC. NUMBER 1310A22587-0
REV AX1
SHEET 43 OF 53
CHANGE by Jimmy song
26-Dec-2008

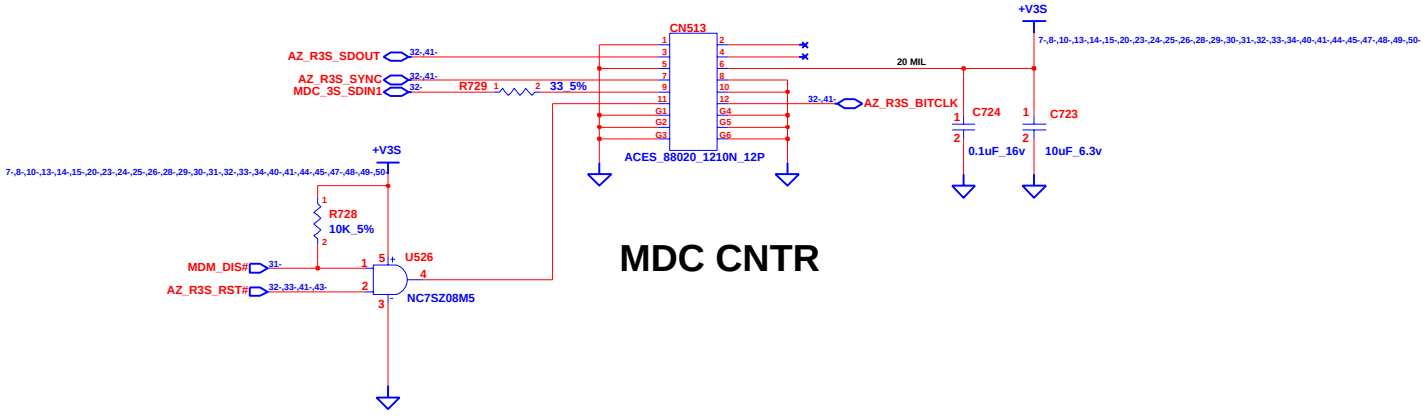


# MDC CNTR

| | | | |
|---|---|---|---|
| CHANGE by | Jimmy song | 26-Dec-2008 | |

**INVENTEC**

TITLE *Volna 09 AMD-UMA*
*MDC CNTR*

| SIZE | CODE | DOC. NUMBER | REV |
|---|---|---|---|
| A3 | CS | 1310A22587-0 | AX1 |

SHEET 44 OF 53

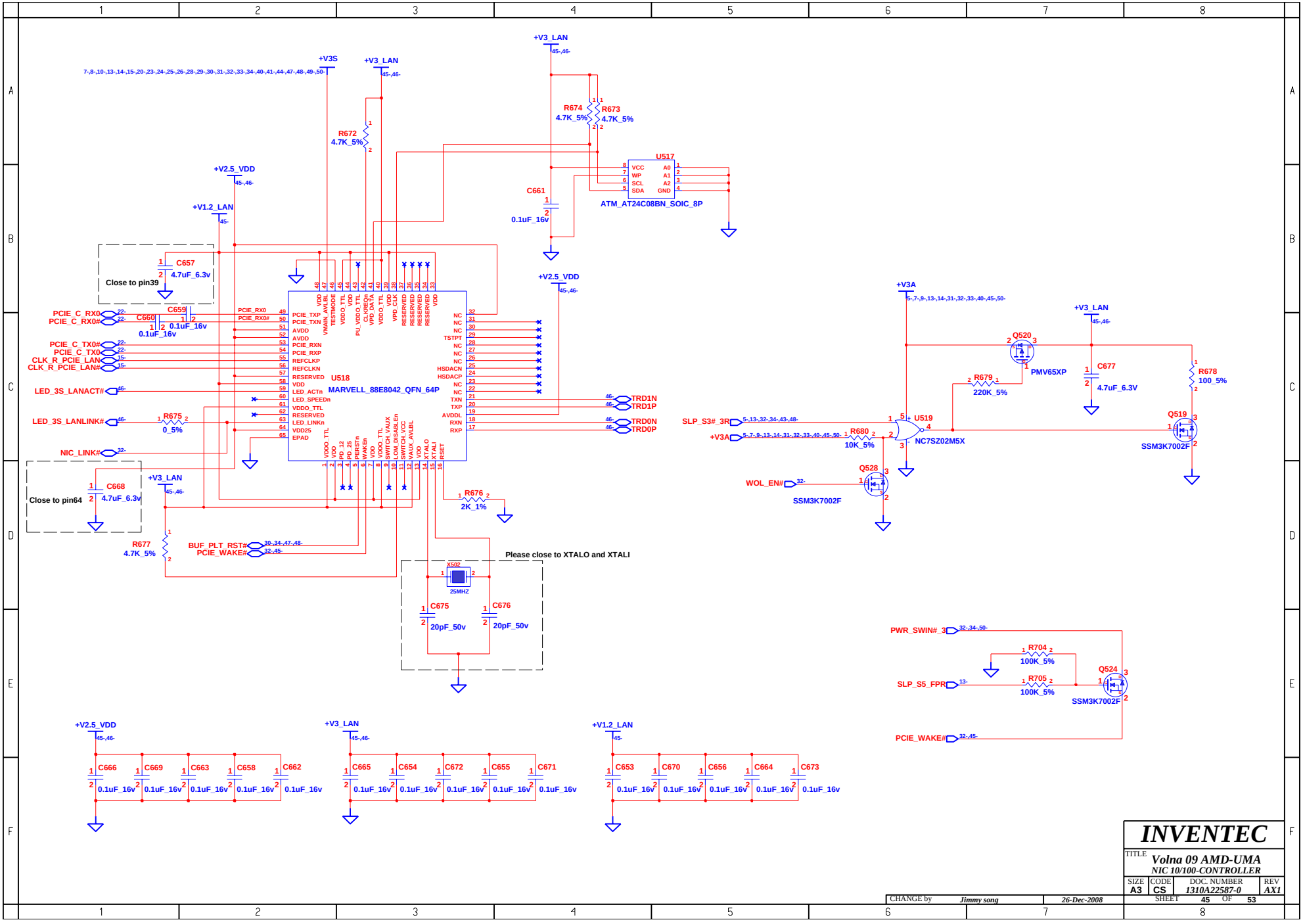
+V3S
+V3_LAN
+V2.5_VDD
+V1.2_LAN
+V3A
U518
MARVELL_88E8042_QFN_64P
U517
ATM_AT24C08BN_SOIC_8P
U519
NC7SZ02M5X
Q520
PMV65XP
Q519
SSM3K7002F
Q528
SSM3K7002F
Q524
SSM3K7002F
X502
25MHZ
Close to pin39
Close to pin64
Please close to XTALO and XTALI
PCIE_C_RX0
PCIE_C_RX0#
PCIE_C_TX0#
PCIE_C_TX0
CLK_R_PCIE_LAN
CLK_R_PCIE_LAN#
LED_3S_LANACT#
LED_3S_LANLINK#
NIC_LINK#
BUF_PLT_RST#
PCIE_WAKE#
TRD1N
TRD1P
TRD0N
TRD0P
SLP_S3#_3R
WOL_EN#
PWR_SWIN#_3
SLP_S5_FPR
R674 4.7K_5%
R673 4.7K_5%
R672 4.7K_5%
R675 0_5%
R676 2K_1%
R677 4.7K_5%
R679 220K_5%
R680 10K_5%
R678 100_5%
R704 100K_5%
R705 100K_5%
C657 4.7uF_6.3v
C659 0.1uF_16v
C660 0.1uF_16v
C661 0.1uF_16v
C668 4.7uF_6.3v
C675 20pF_50v
C676 20pF_50v
C677 4.7uF_6.3V
C666 C669 C663 C658 C662 0.1uF_16v
C665 C654 C672 C655 C671 0.1uF_16v
C653 C670 C656 C664 C673 0.1uF_16v
INVENTEC
TITLE
Volna 09 AMD-UMA
NIC 10/100-CONTROLLER
SIZE A3
CODE CS
DOC. NUMBER 1310A22587-0
REV AX1
SHEET 45 OF 53
CHANGE by Jimmy song
26-Dec-2008

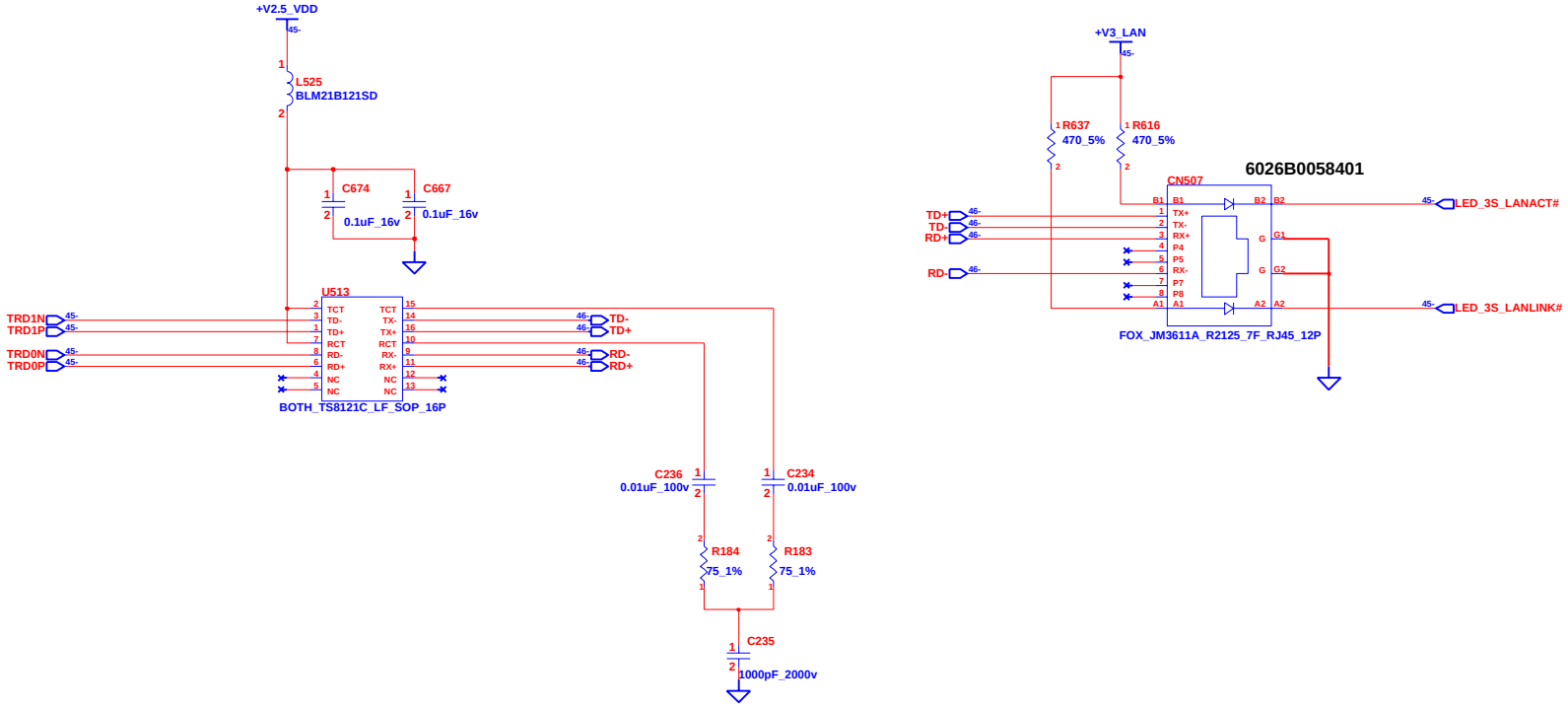


# INVENTEC

TITLE
**Volna 09 AMD-UMA**
**NIC 10/100-RJ45 CONN**

| SIZE | CODE | DOC. NUMBER | REV |
|---|---|---|---|
| A3 | CS | 1310A22587-0 | AX1 |

CHANGE by Jimmy song 26-Dec-2008

SHEET 46 OF 53

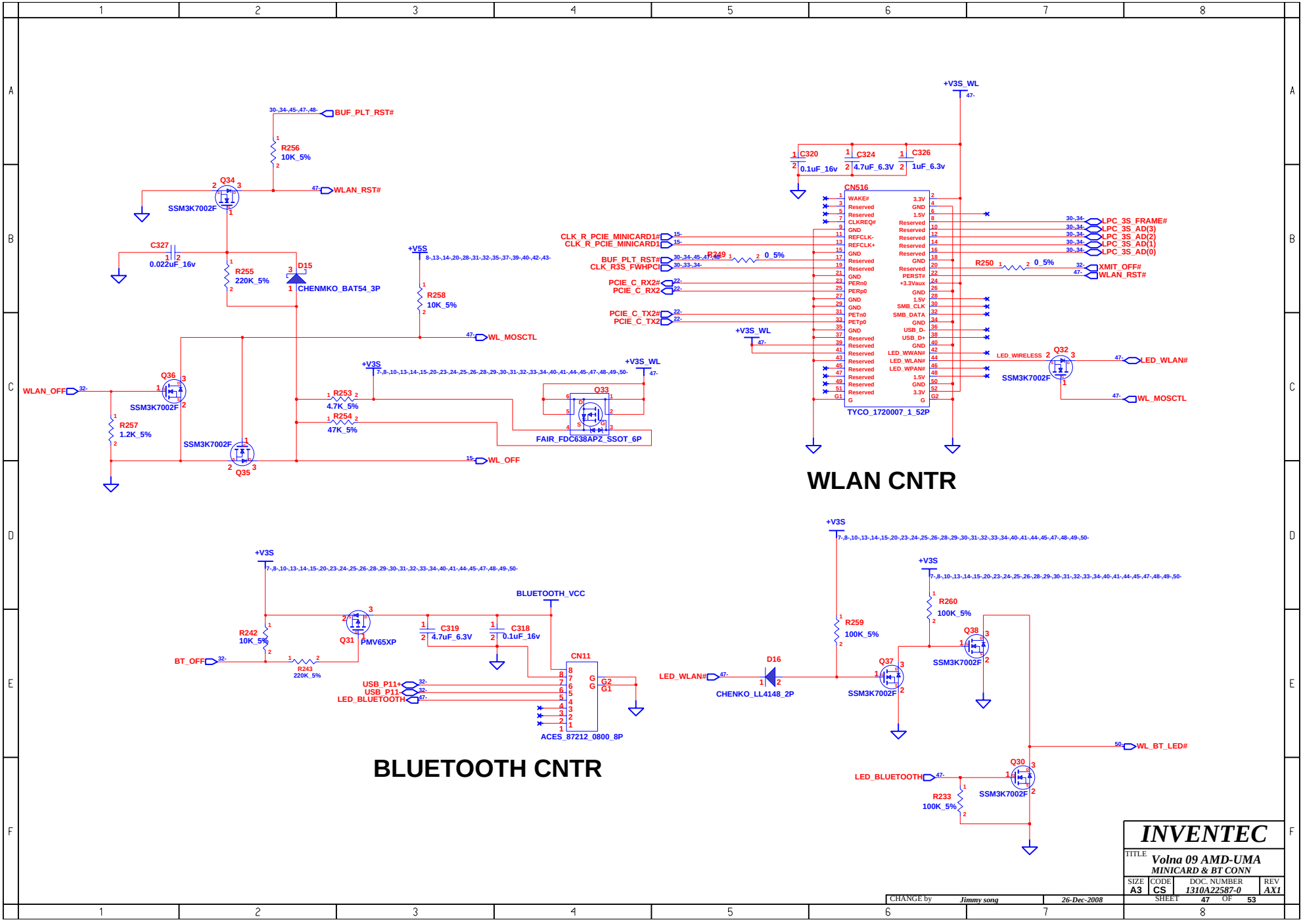
WLAN CNTR
BLUETOOTH CNTR
BUF_PLT_RST#
WLAN_RST#
R256 10K_5%
Q34 SSM3K7002F
C327 0.022uF_16v
R255 220K_5%
D15 CHENMKO_BAT54_3P
+V5S
R258 10K_5%
WL_MOSCTL
WLAN_OFF
Q36 SSM3K7002F
R257 1.2K_5%
Q35 SSM3K7002F
+V3S
R253 4.7K_5%
R254 47K_5%
Q33 FAIR_FDC638APZ_SSOT_6P
+V3S_WL
WL_OFF
+V3S_WL
C320 0.1uF_16v
C324 4.7uF_6.3V
C326 1uF_6.3v
CN516 TYCO_1720007_1_52P
CLK_R_PCIE_MINICARD1#
CLK_R_PCIE_MINICARD1
BUF_PLT_RST#
CLK_R3S_FWHPCI
R249 0_5%
PCIE_C_RX2#
PCIE_C_RX2
PCIE_C_TX2#
PCIE_C_TX2
LPC_3S_FRAME#
LPC_3S_AD(3)
LPC_3S_AD(2)
LPC_3S_AD(1)
LPC_3S_AD(0)
R250 0_5%
XMIT_OFF#
WLAN_RST#
LED_WIRELESS
Q32 SSM3K7002F
LED_WLAN#
WL_MOSCTL
+V3S
R242 10K_5%
Q31 PMV65XP
BT_OFF
R243 220K_5%
C319 4.7uF_6.3V
C318 0.1uF_16v
BLUETOOTH_VCC
CN11 ACES_87212_0800_8P
USB_P11+
USB_P11-
LED_BLUETOOTH
LED_WLAN#
D16 CHENKO_LL4148_2P
R259 100K_5%
Q37 SSM3K7002F
R260 100K_5%
Q38 SSM3K7002F
WL_BT_LED#
LED_BLUETOOTH
Q30 SSM3K7002F
R233 100K_5%
INVENTEC
TITLE Volna 09 AMD-UMA
MINICARD & BT CONN
SIZE A3
CODE CS
DOC. NUMBER 1310A22587-0
REV AX1
SHEET 47 OF 53
CHANGE by Jimmy song
26-Dec-2008

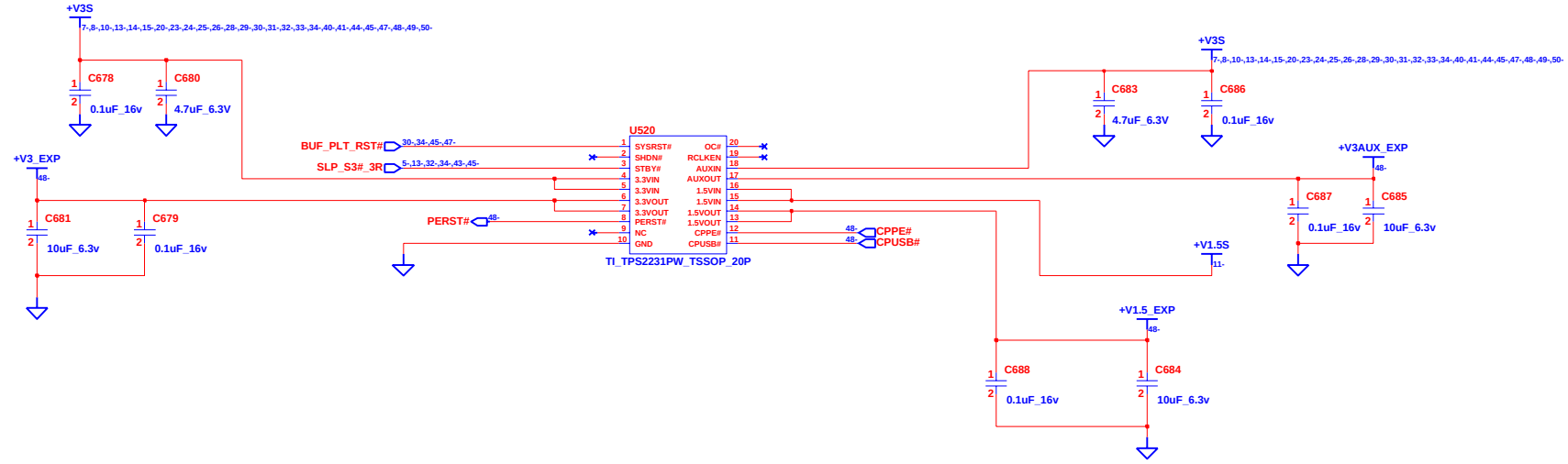


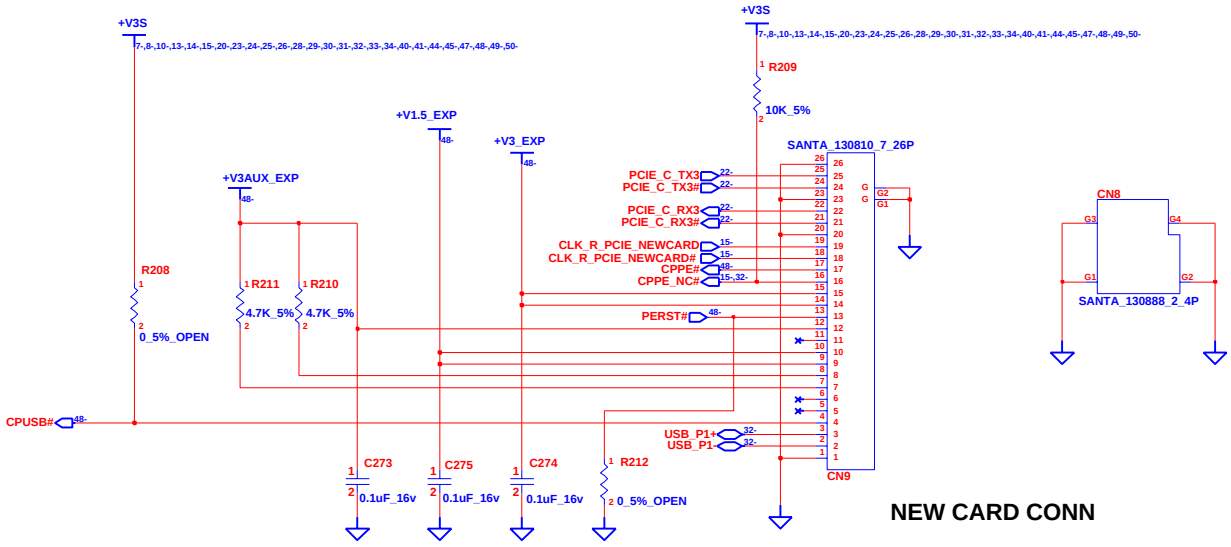


NEW CARD CONN

| | | | |
|---|---|---|---|
| CHANGE by | Jimmy song | 26-Dec-2008 | |

**INVENTEC**

TITLE: *Volna 09 AMD-UMA*
*EXPRESS CARD*

| SIZE | CODE | DOC. NUMBER | REV |
|---|---|---|---|
| A3 | CS | 1310A22587-0 | AX1 |

SHEET 48 OF 53

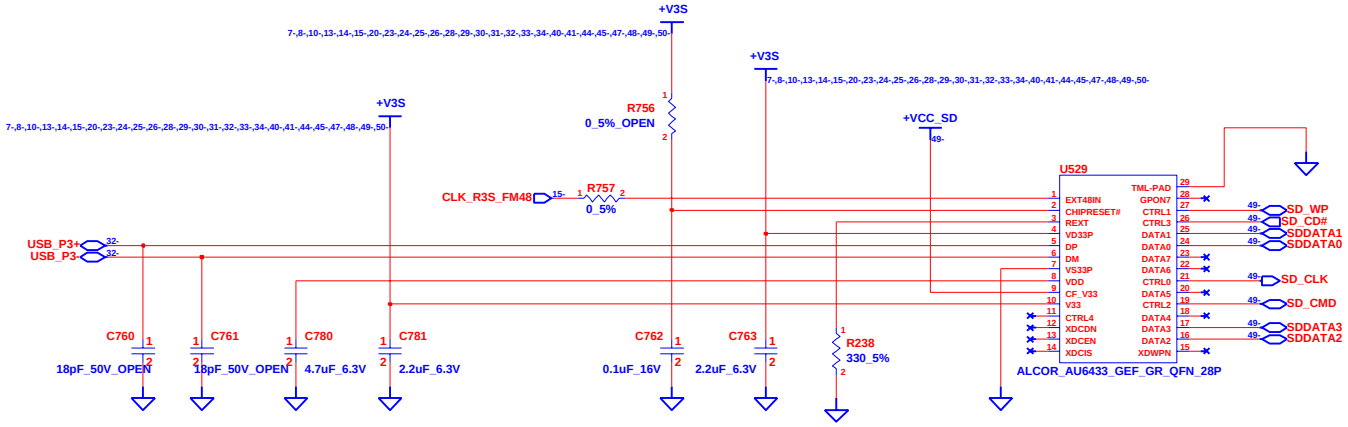


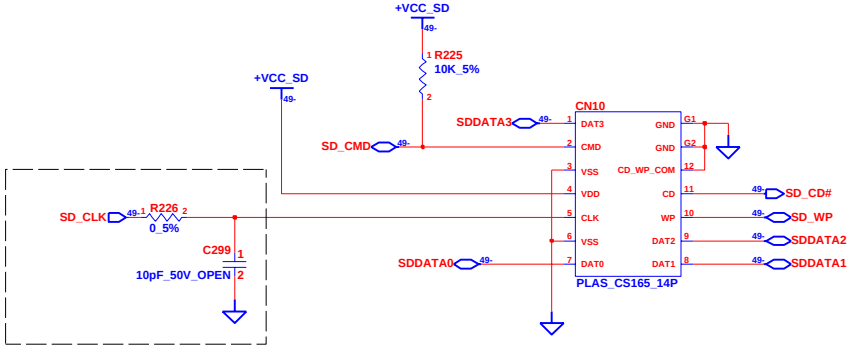


# INVENTEC

TITLE **Volna 09 AMD-UMA**
**FLASH MEDIA CARD**

| SIZE | CODE | DOC. NUMBER | REV |
|---|---|---|---|
| A3 | CS | 1310A22587-0 | AX1 |

CHANGE by *Jimmy song* *26-Dec-2008*

SHEET 49 OF 53

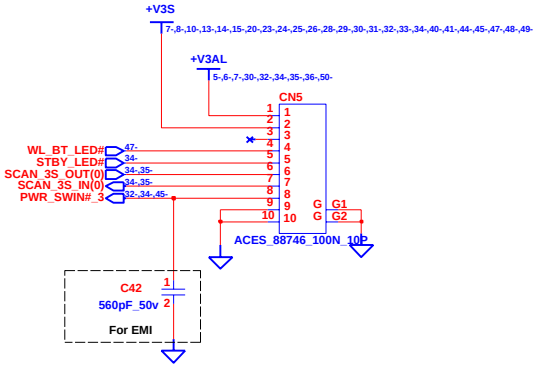


## SWITCH DAUGHTER CONNECTOR

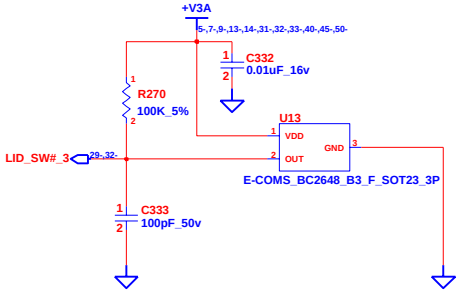


## LID SWITCH

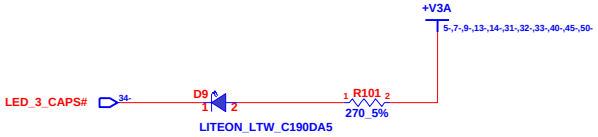


## CAP LED

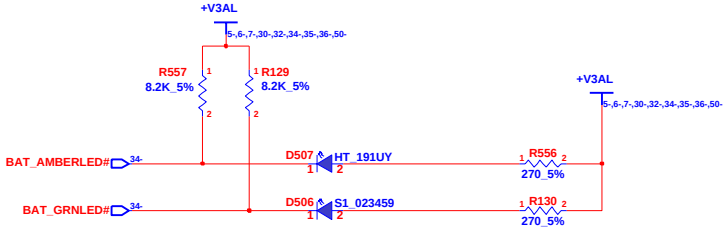


## BATTERY-CHARGE LED

| | | | |
|---|---|---|---|
| CHANGE by | Jimmy song | 26-Dec-2008 | |

**INVENTEC**

TITLE *Volna 09 AMD-UMA*
*BUTTON & LED*

| SIZE | CODE | DOC. NUMBER | REV |
|---|---|---|---|
| A3 | CS | 1310A22587-0 | AX1 |

SHEET 50 OF 53

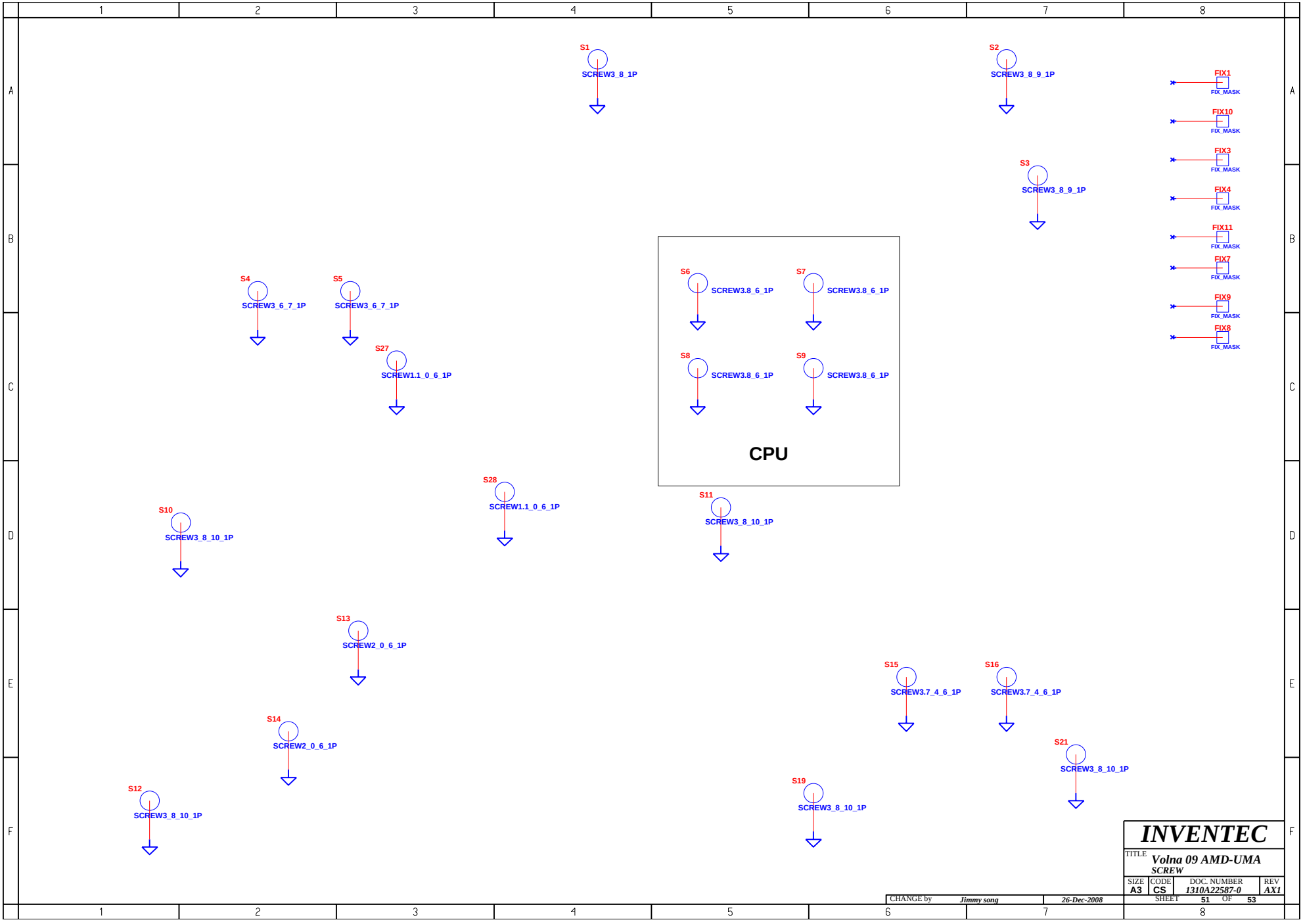
S1
SCREW3_8_1P
S2
SCREW3_8_9_1P
FIX1
FIX_MASK
FIX10
FIX_MASK
FIX3
FIX_MASK
FIX4
FIX_MASK
FIX11
FIX_MASK
FIX7
FIX_MASK
FIX9
FIX_MASK
FIX8
FIX_MASK
S3
SCREW3_8_9_1P
S4
SCREW3_6_7_1P
S5
SCREW3_6_7_1P
S27
SCREW1.1_0_6_1P
S6
SCREW3.8_6_1P
S7
SCREW3.8_6_1P
S8
SCREW3.8_6_1P
S9
SCREW3.8_6_1P
CPU
S28
SCREW1.1_0_6_1P
S11
SCREW3_8_10_1P
S10
SCREW3_8_10_1P
S13
SCREW2_0_6_1P
S15
SCREW3.7_4_6_1P
S16
SCREW3.7_4_6_1P
S14
SCREW2_0_6_1P
S21
SCREW3_8_10_1P
S19
SCREW3_8_10_1P
S12
SCREW3_8_10_1P
INVENTEC
TITLE
Volna 09 AMD-UMA
SCREW
SIZE A3
CODE CS
DOC. NUMBER 1310A22587-0
REV AX1
SHEET 51 OF 53
CHANGE by Jimmy song
26-Dec-2008

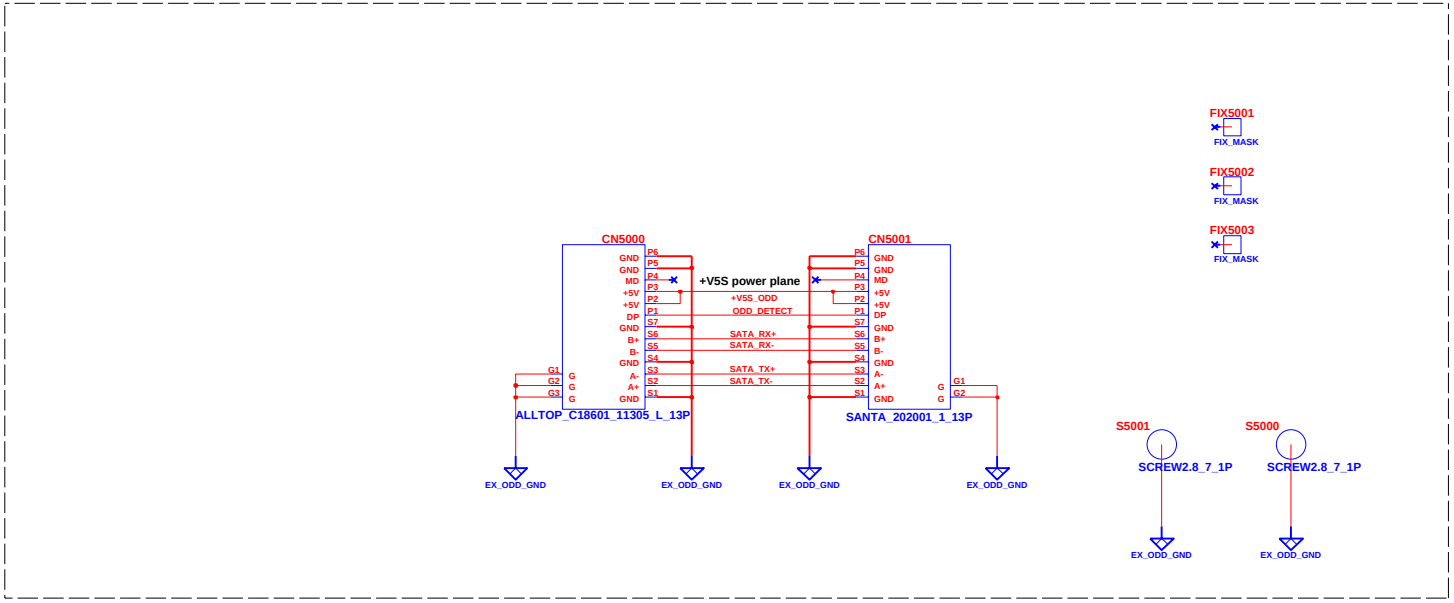


# ODD Extension Board

| | | | |
|---|---|---|---|
| CHANGE by | Jimmy song | 26-Dec-2008 | |

**INVENTEC**

TITLE *Volna 09 AMD-UMA*
*ODD Extention Board*

| SIZE | CODE | DOC. NUMBER | REV |
|---|---|---|---|
| A3 | CS | 1310A22587-0 | AX1 |

SHEET 52 OF 53

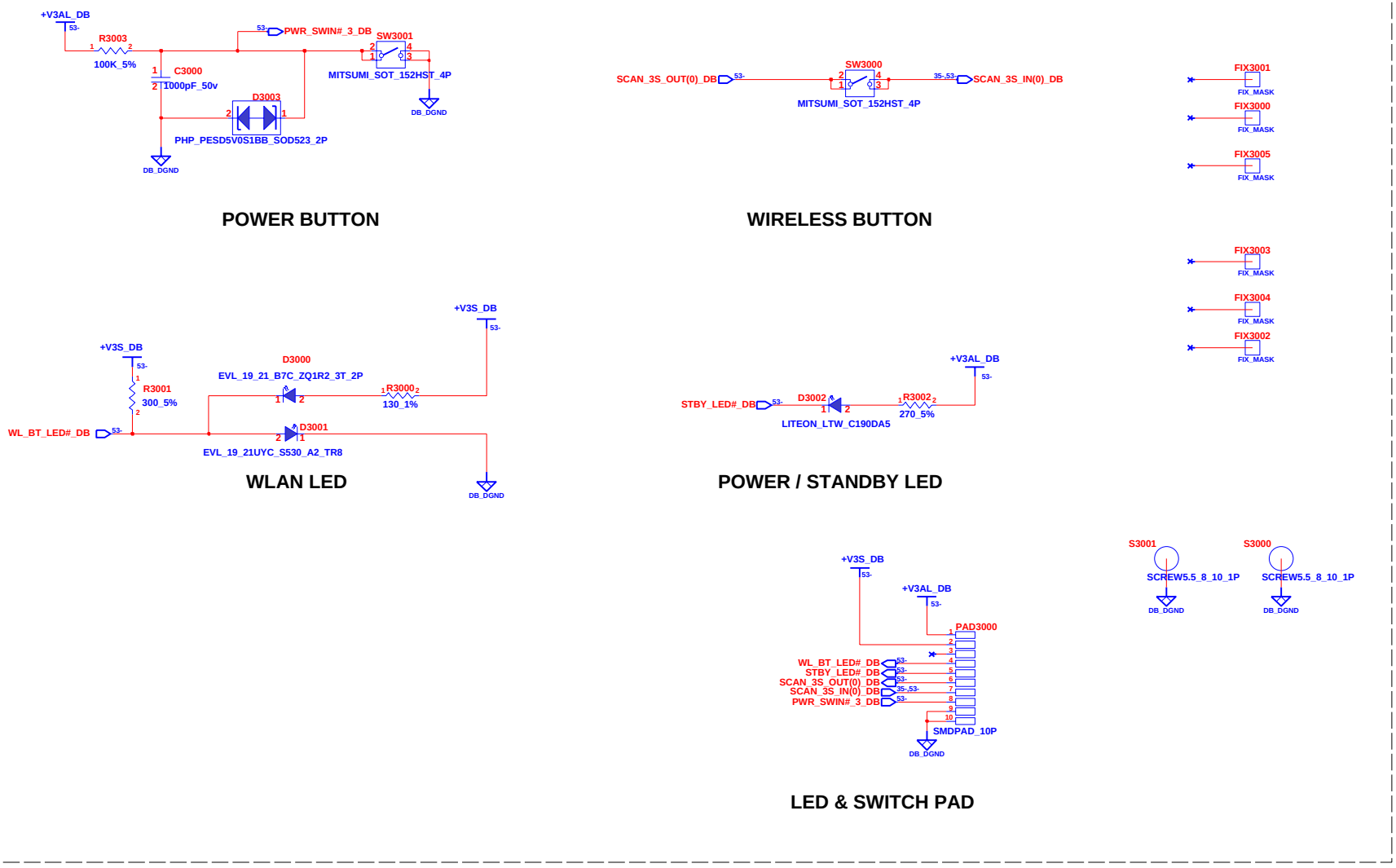


# SWITCH DAUGHTER BOARD

| | | | |
|---|---|---|---|
| CHANGE by | Jimmy song | 26-Dec-2008 | |

**INVENTEC**

TITLE: *Volna 09 AMD-UMA*
*SWITCH Board*

| SIZE | CODE | DOC. NUMBER | REV |
|---|---|---|---|
| A3 | CS | 1310A22587-0 | AX1 |

SHEET 53 OF 53