Phoenix 10A
Sacramento 10A

PMP BUILD

2008 0123

DATE	CHANGE NO.	REV

	EE	DATE	POWER	DATE
DRAWER				
DESIGN				
CHECK				
RESPONSIBLE				

SIZE = 3 VER :
FILE NAME : XXXX-XXXXXX-XX
P/N XXXXXXXXXXXX

INVENTEC

TITLE *Phoenix/Sacramento 10A*

SIZE	CODE	DOC. NUMBER	REV
A3	CS	*Model_No*	*X01*

SHEET 1 OF 54

hexainf@hotmail.com
GRATIS - FREE

TABLE OF CONTENTS

PAGE	PAGE	PAGE
1.COVER PAGE	29.S/B 1	49.LED(M/B) & HOTKEY/B CONN
2.INDEX	30.S/B 2	50.TOUCH PAD BOARD
3.BLOCK DIAGRAM	31.S/B 3	51.KILL SWITCH& LID SWITCH
4.POWER SEQUENCE BLOCK	32.S/B 4	52.DRILL HOLE
5-12.SYSTEM POWER	33.CARDBUS CONTROLLER	53.EMI
13.CLOCK GENERATOR	34.5 IN 1 CARD SLOT	
14.CPU 1	35.PCMCIA CONN	
15.CPU 2	36.EXPRESS CARD CONN	
16.CPU 3	37.LAN CONTROLLER	
17.CPU 4	38.RJ45 & TRANSFORMER	
18.FAN & THERMAL CONTROLLER	39.WLAN & HD_DVD	
19.N/B 1	40.SATA HDD1 CONN	
20.N/B 2	41.CAMERA CONN	
21.N/B 3	42.ODD CONN	
22.N/B 4	43.USB CONN	
23.DDR2 DIMM0	44.KBC	
24.DDR2 DIMM1	45.K/B & TP/B CONN	
25.DDR DAMPING	46.AZALIA CODEC	
26.CRT CONN	47.AUDIO AMP & MIC & HP	
27.HDMI CONN	48.MDC 1.5 CONN	
28.LCM CONN		

INVENTEC			
TITLE Phoenix/Sacramento 10A			
SIZE A3	CODE CS	DOC. NUMBER Model_No	REV X01
CHANGE by TIGER	17-Aug-2007	SHEET 2 OF 54	

hexainf@hotmail.com
GRATIS - FREE

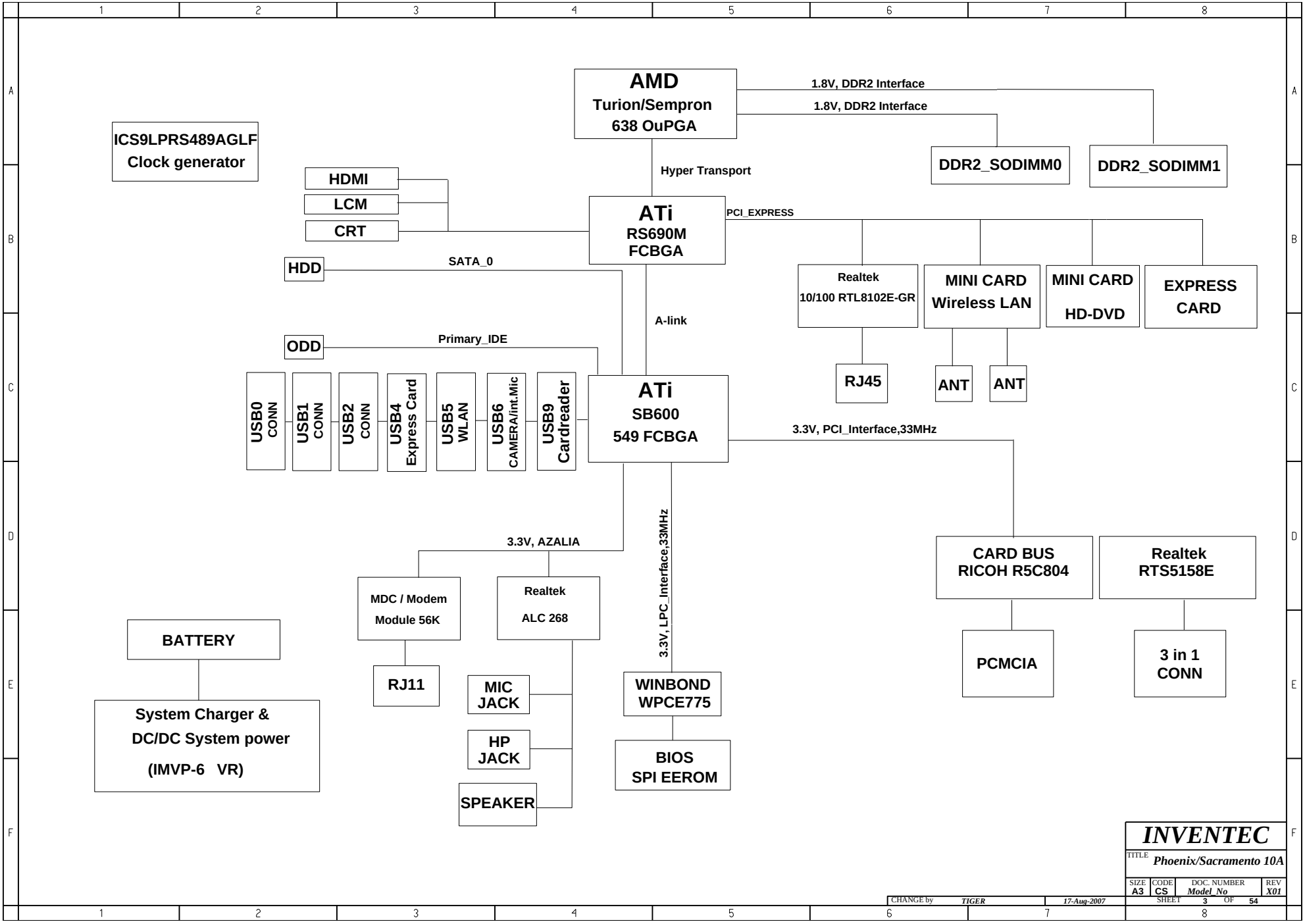

hexainf@hotmail.com
GRATIS - FREE

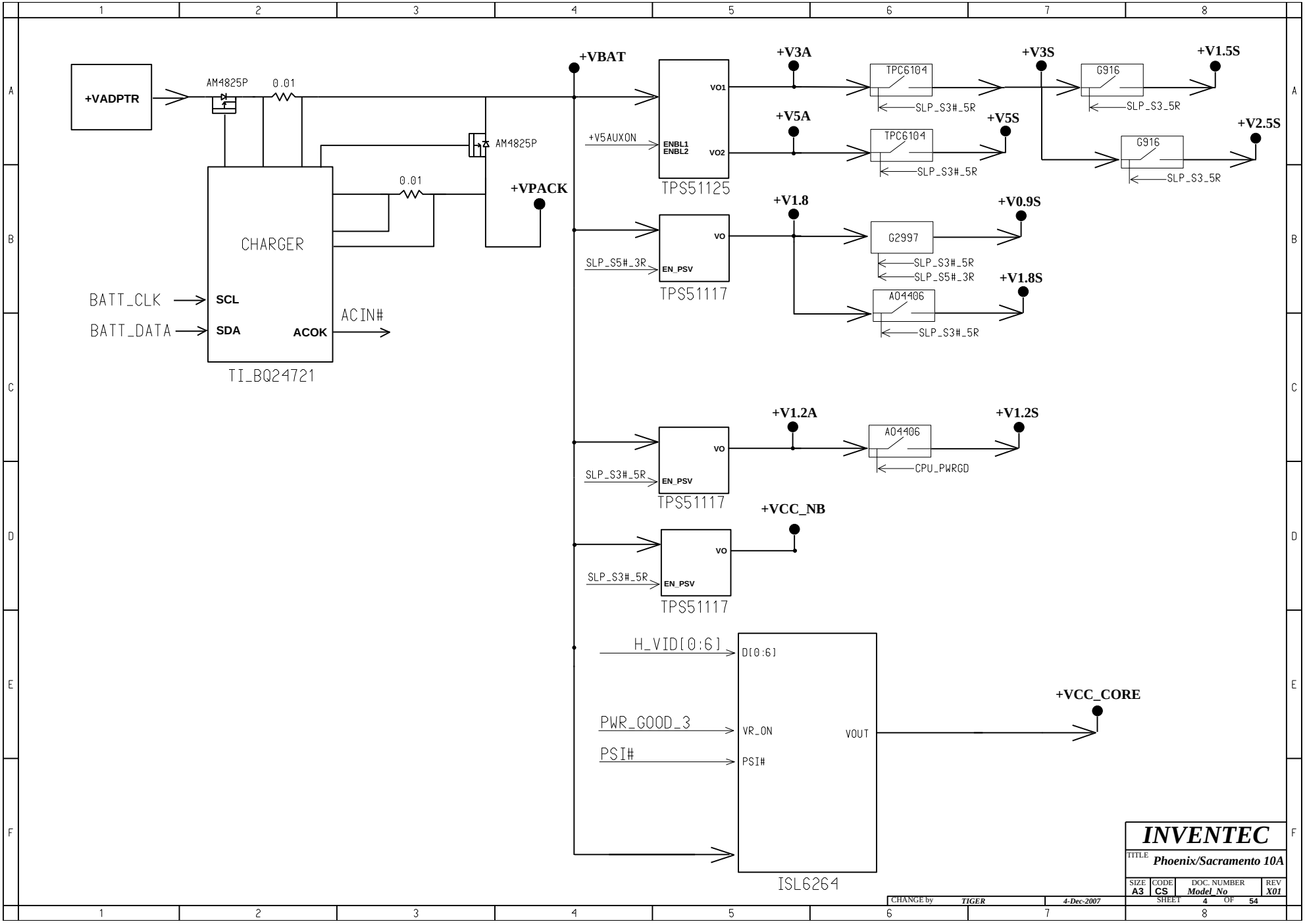

hexainf@hotmail.com
GRATIS - FREE

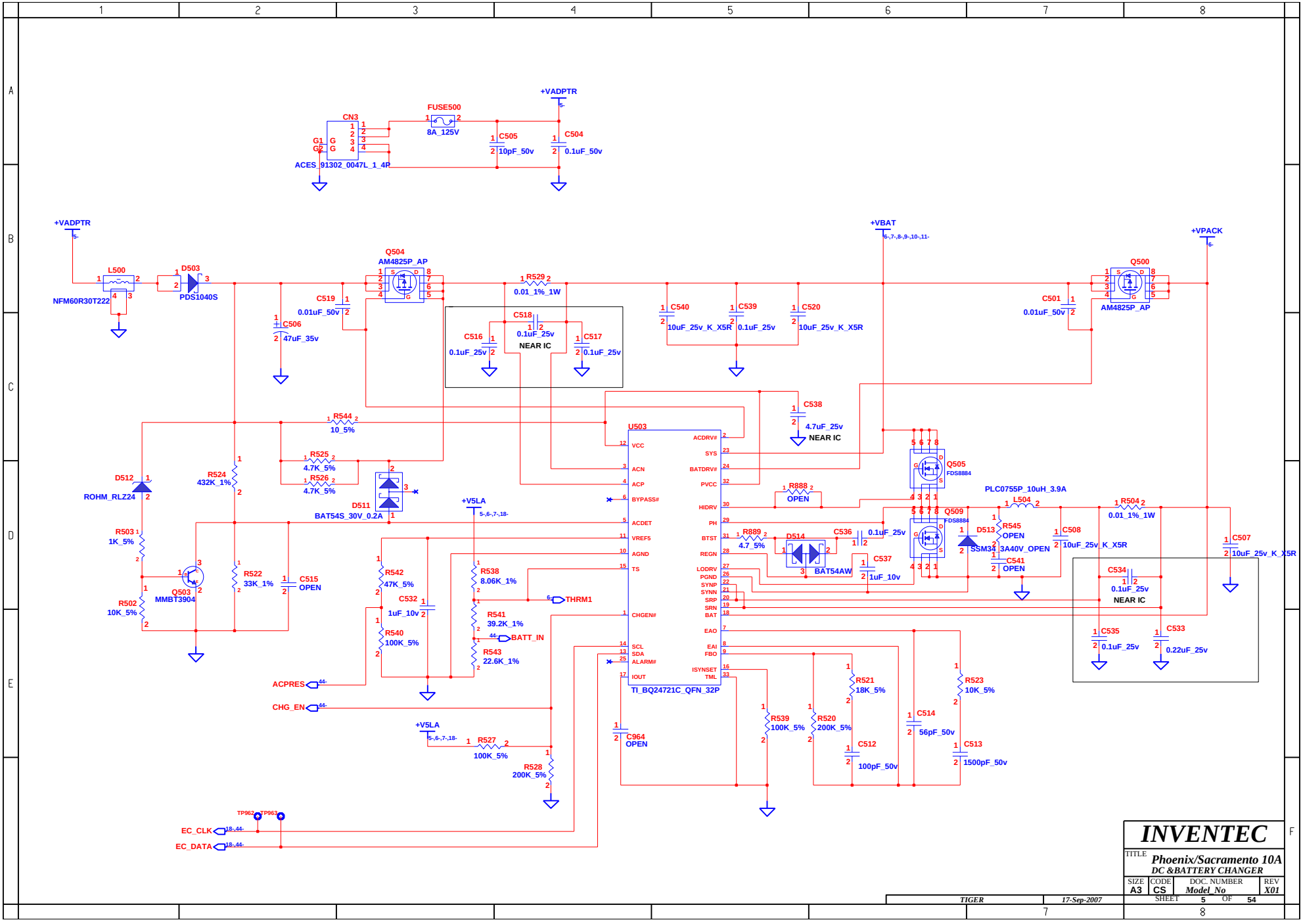

hexainf@hotmail.com
GRATIS - FREE

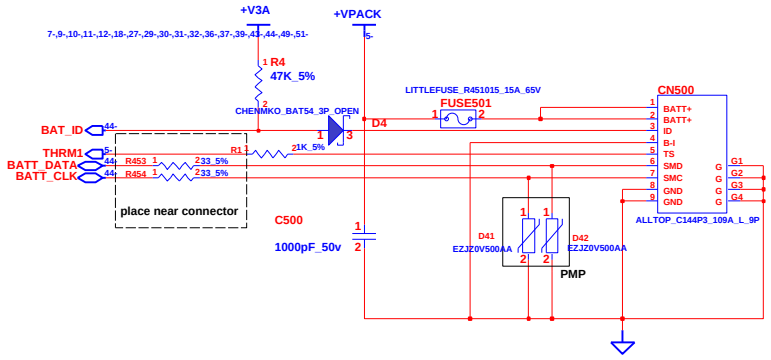

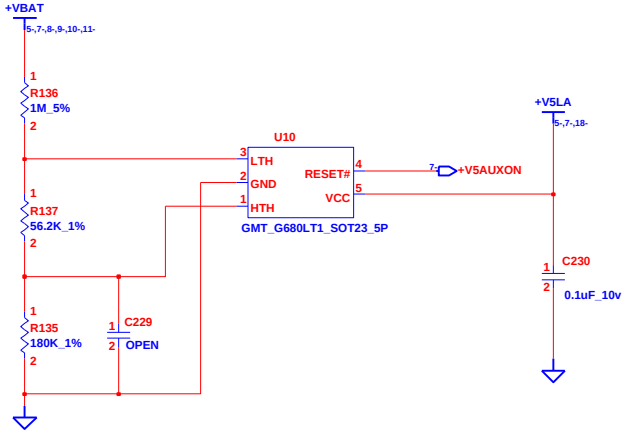

CHANGE by	TIGER	27-Nov-2007	

INVENTEC

TITLE **Phoenix/Sacramento 10A**
BATTERY CONN

SIZE	CODE	DOC. NUMBER	REV
A3	CS	Model_No	X01

SHEET 6 OF 54

hexainf@hotmail.com
GRATIS - FREE

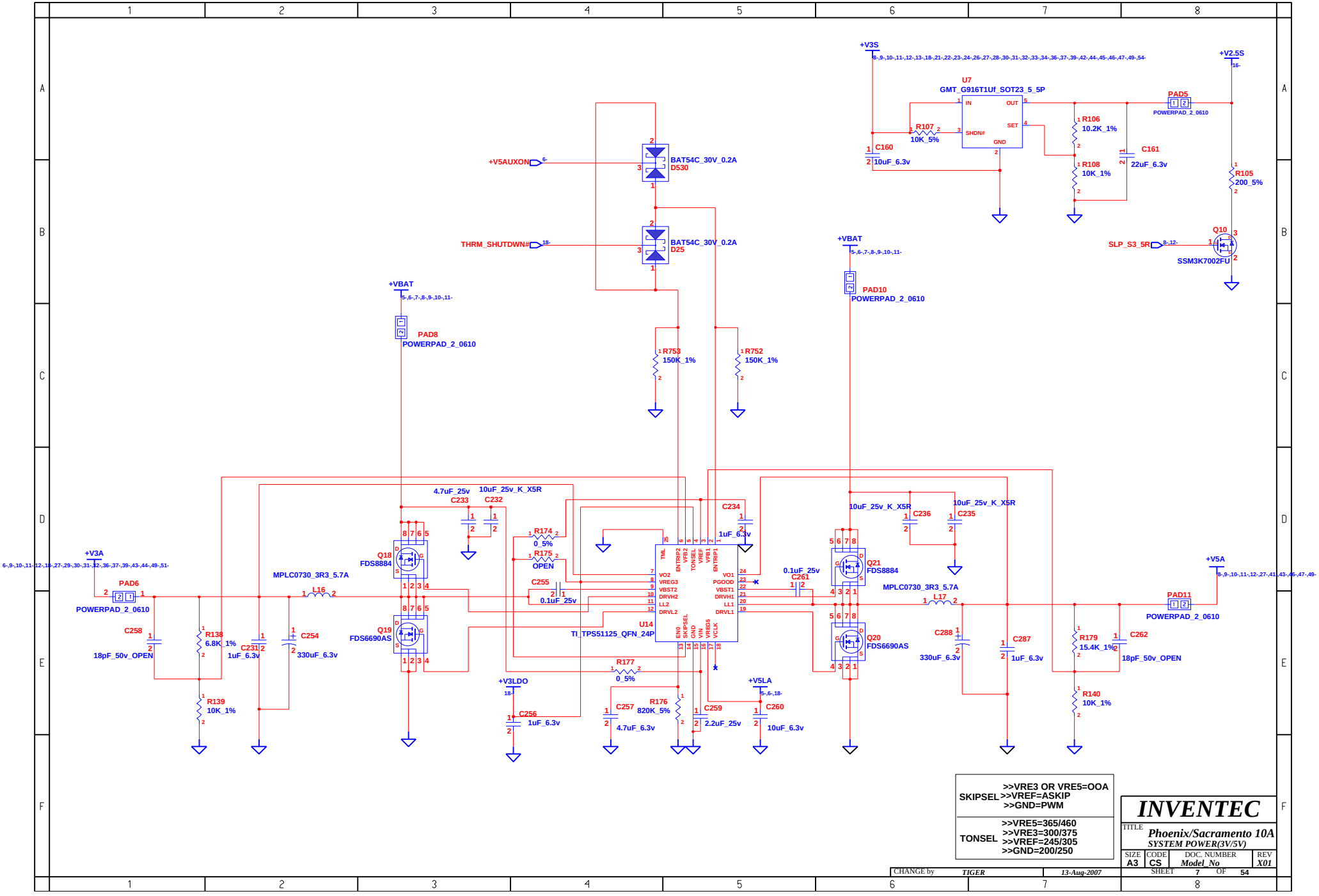

hexainf@hotmail.com
GRATIS - FREE

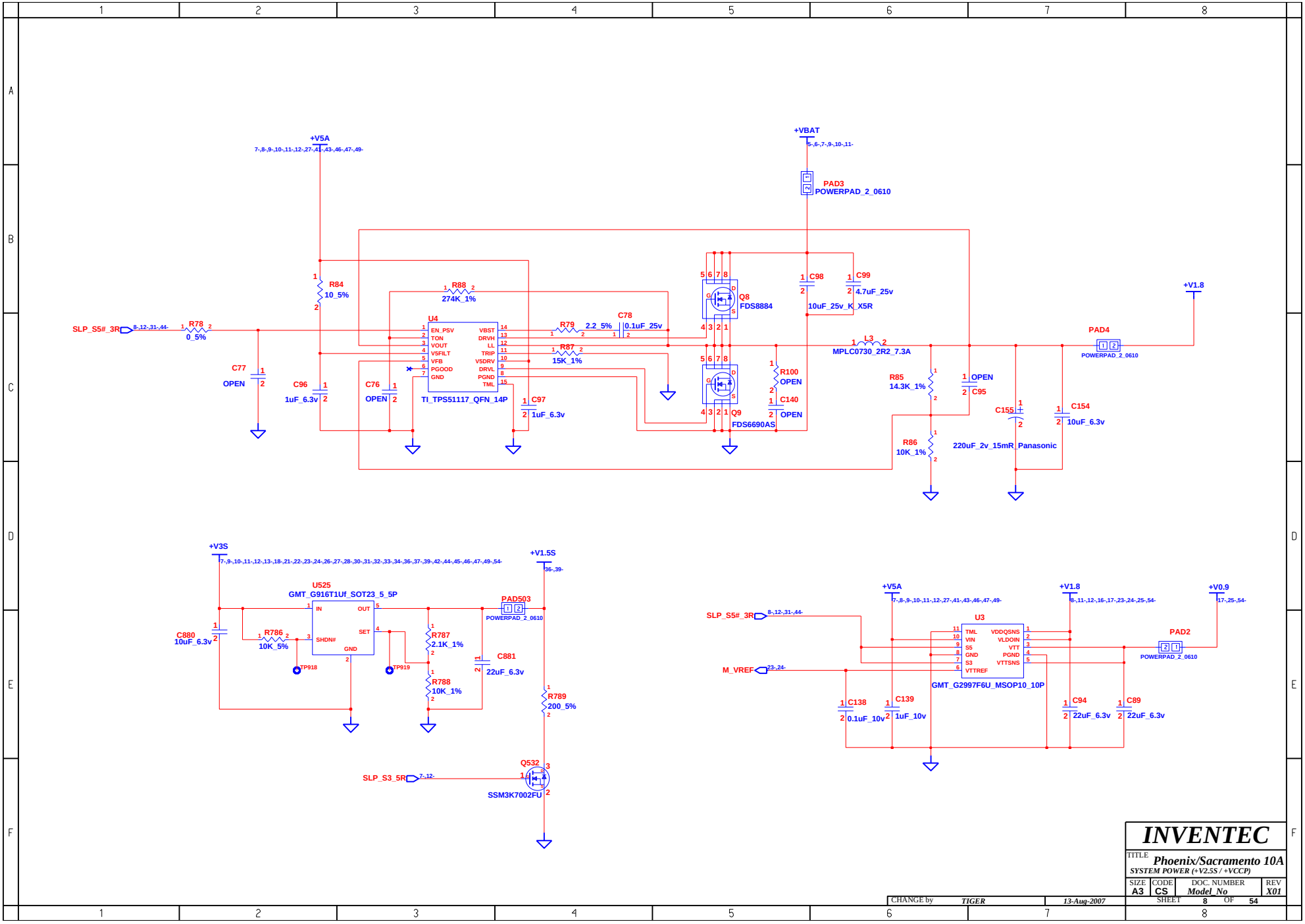

hexainf@hotmail.com
GRATIS - FREE

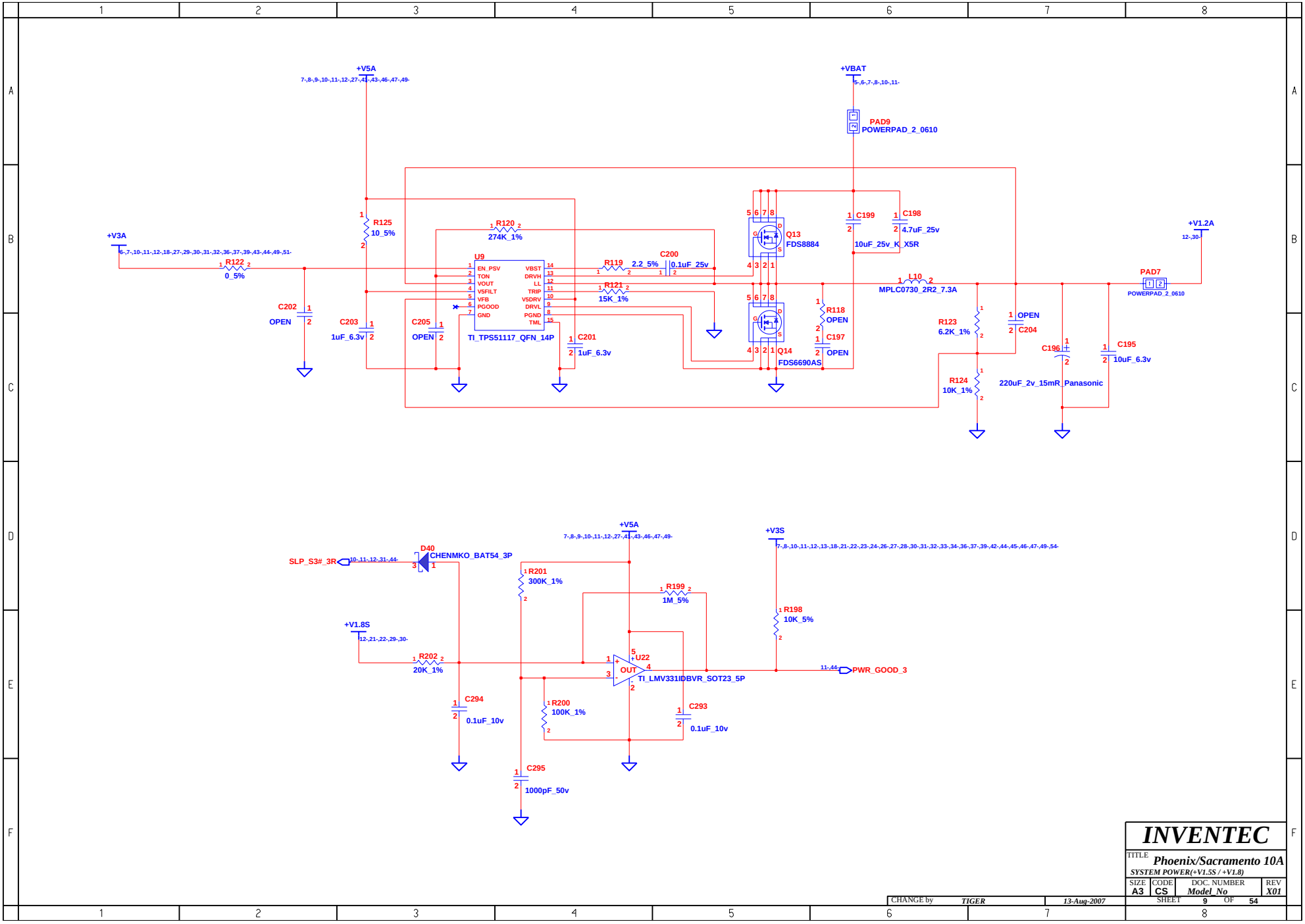

hexainf@hotmail.com
GRATIS - FREE

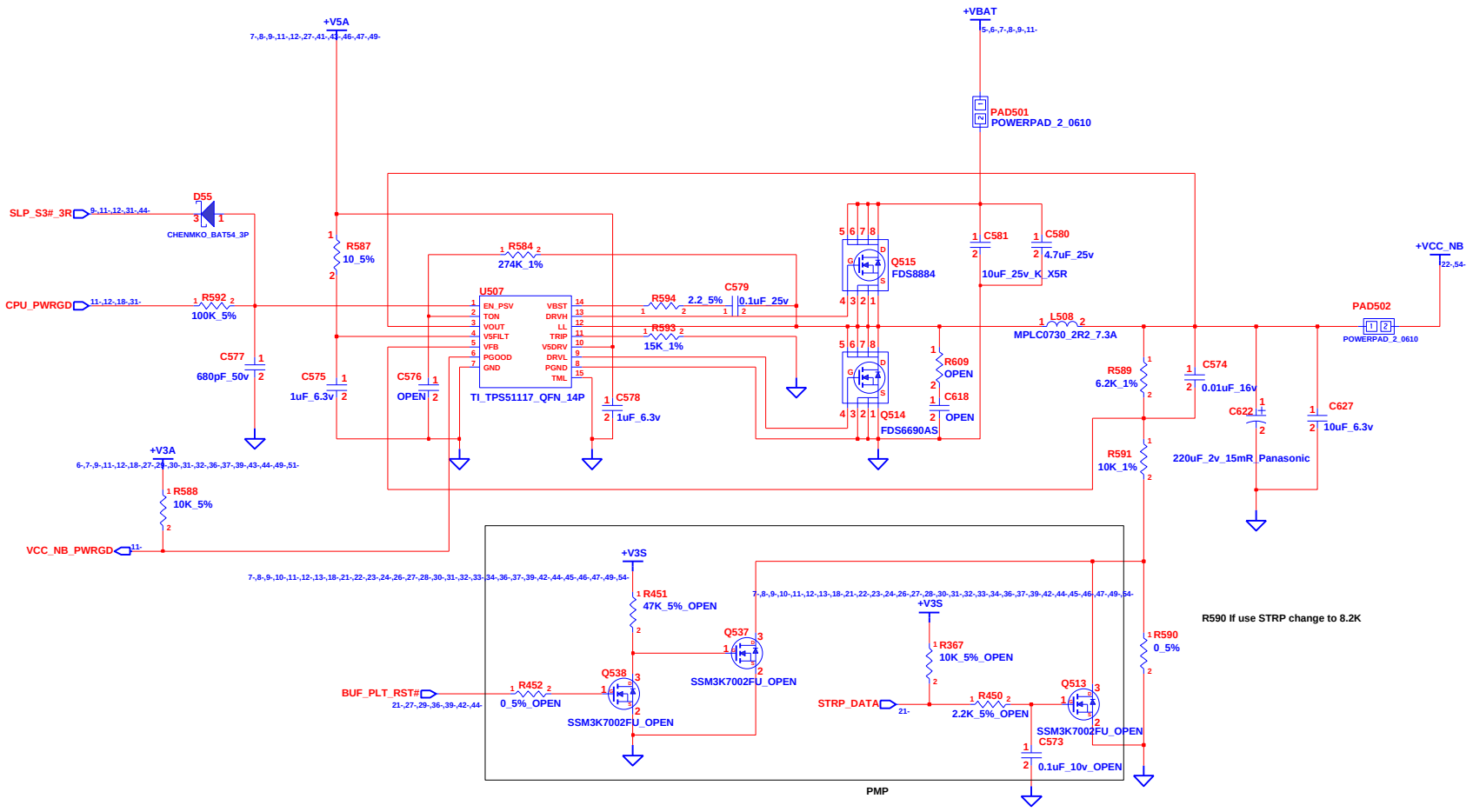

BUF_PLT_RST#	+VCC_NB
1	STRP_DATA
0	1.2

STRP_DATA	+VCC_NB
0	1.0
1	1.2

INVENTEC

TITLE: *Phoenix/Sacramento 10A*
CPU POWER(VCC_CORE)

SIZE	CODE	DOC. NUMBER	REV
A3	CS	*Model_No*	*X01*

CHANGE by *TIGER* *29-Oct-2007*

SHEET 10 OF 54

hexainf@hotmail.com
GRATIS - FREE

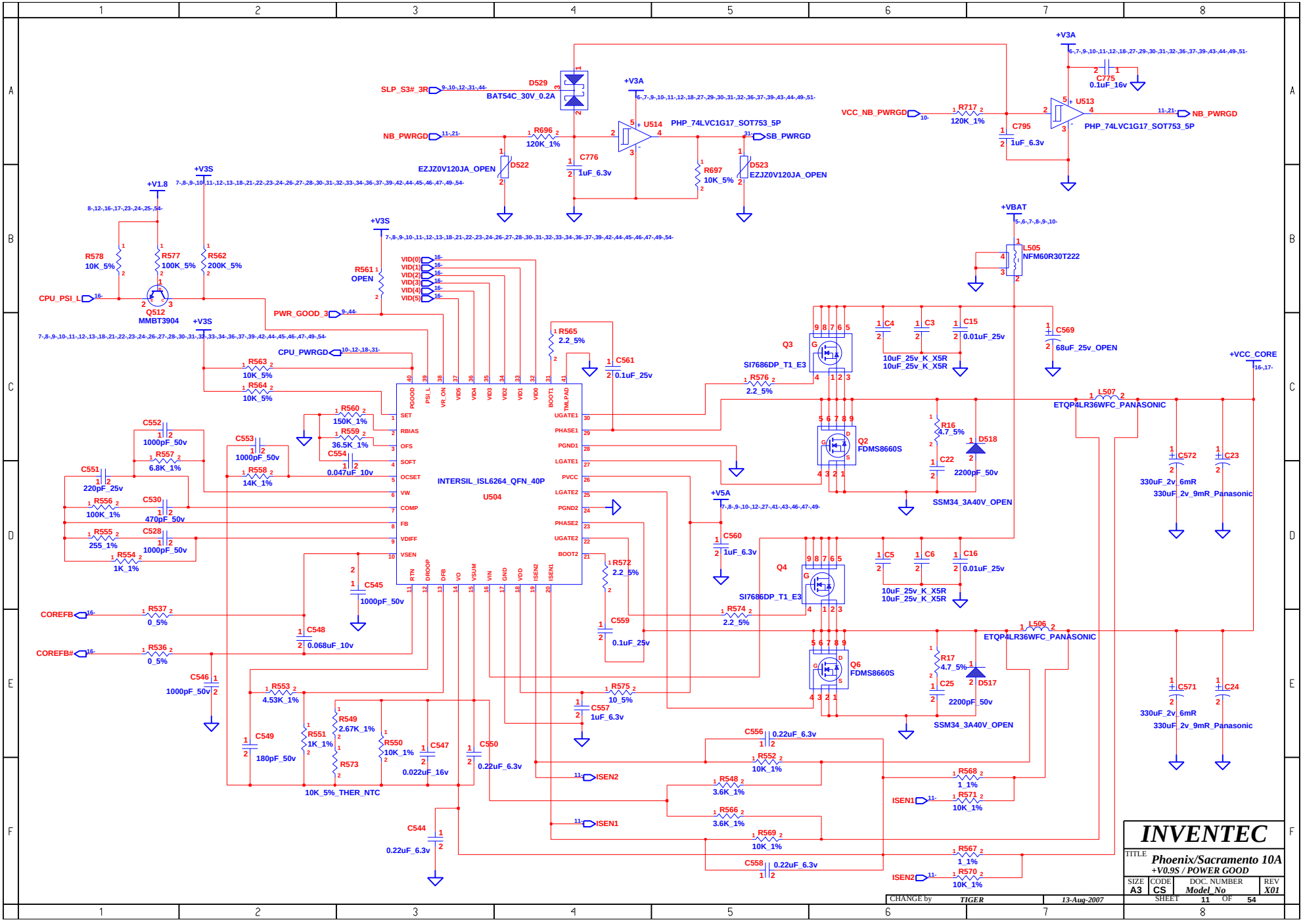

hexainf@hotmail.com
GRATIS - FREE

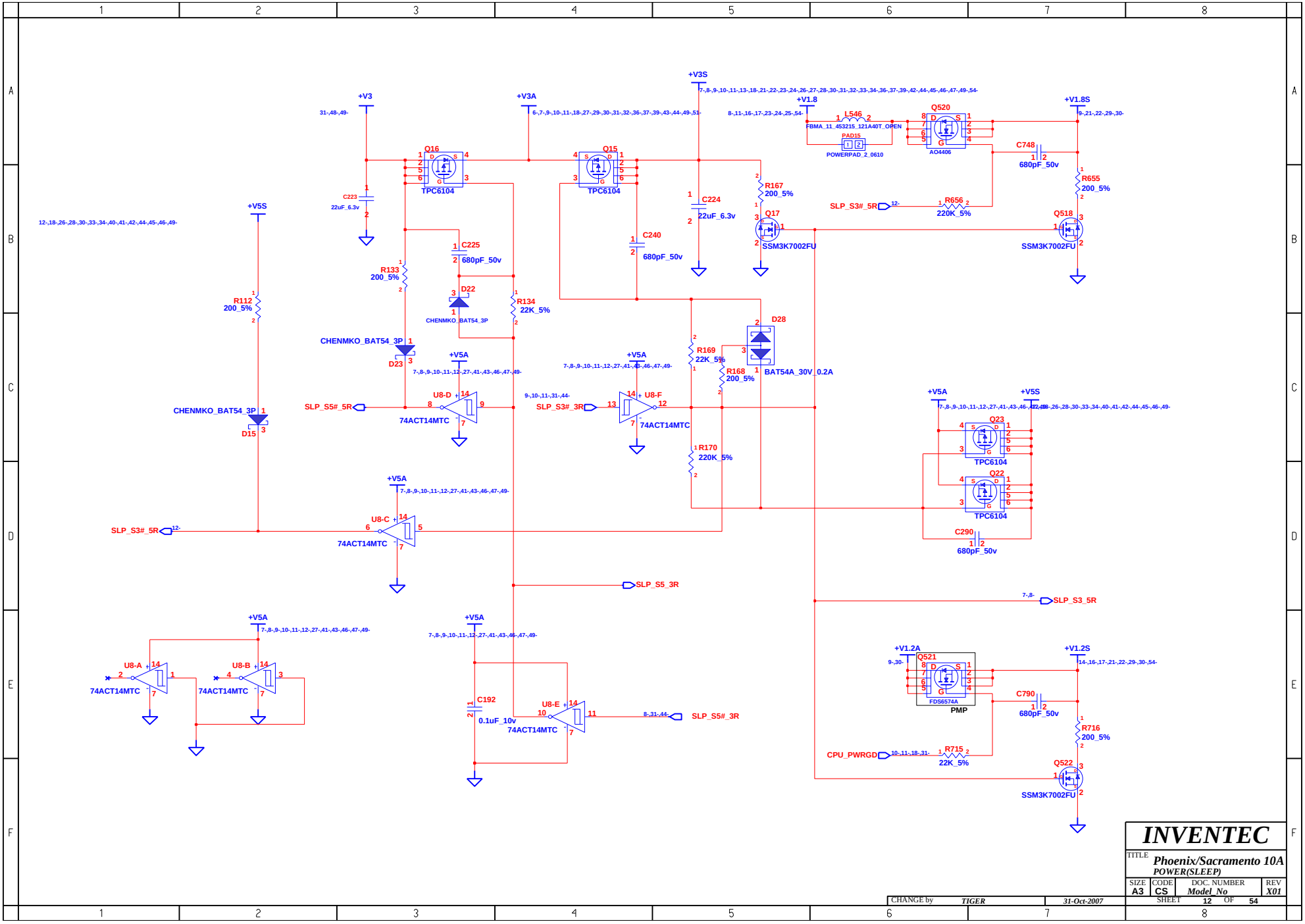

hexainf@hotmail.com
GRATIS - FREE

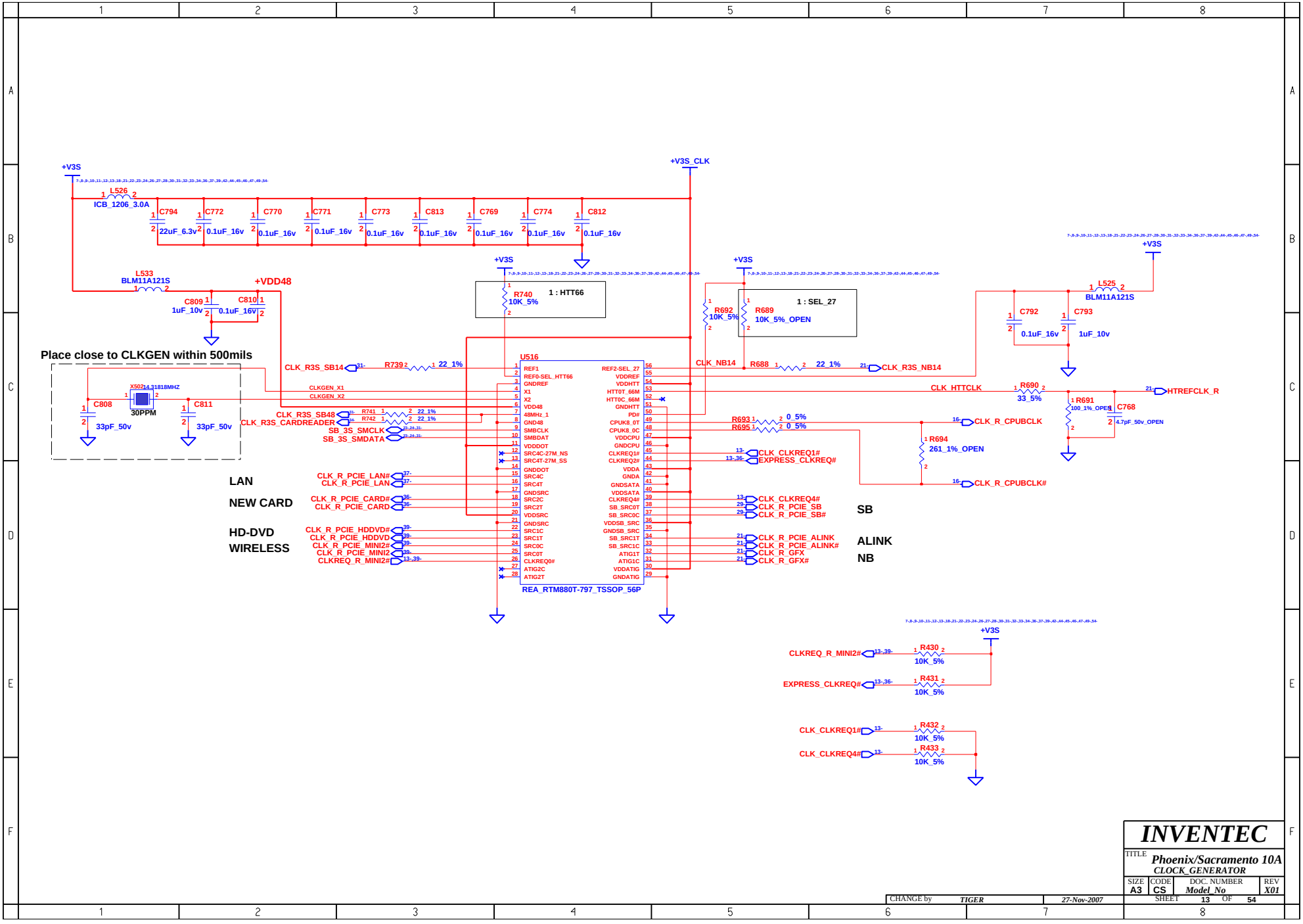

hexainf@hotmail.com
GRATIS - FREE

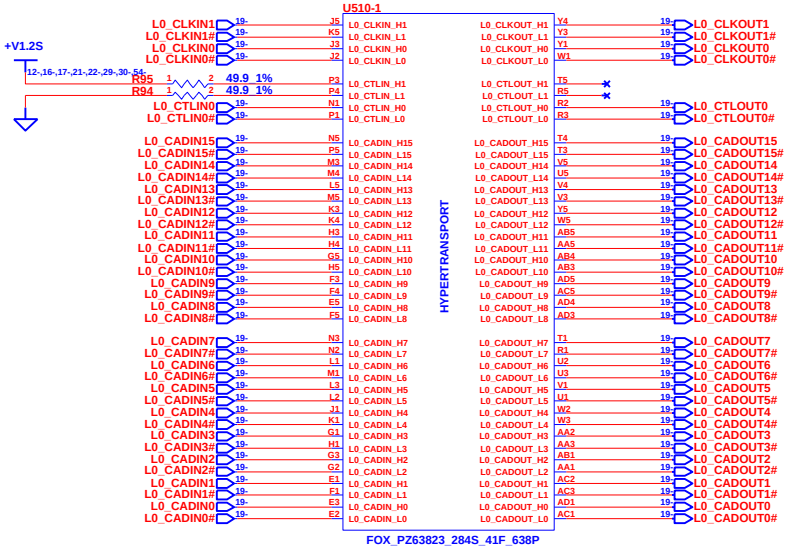

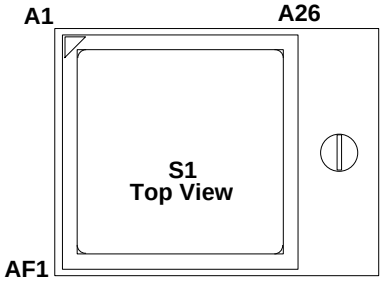

Layout: Add stitching caps if crossing plane split.

INVENTEC			
TITLE Phoenix/Sacramento 10A CPU-1			
SIZE A3	CODE CS	DOC. NUMBER Model_No	REV X01
CHANGE by TIGER	5-Sep-2007	SHEET 14 OF 54	

hexainf@hotmail.com
GRATIS - FREE

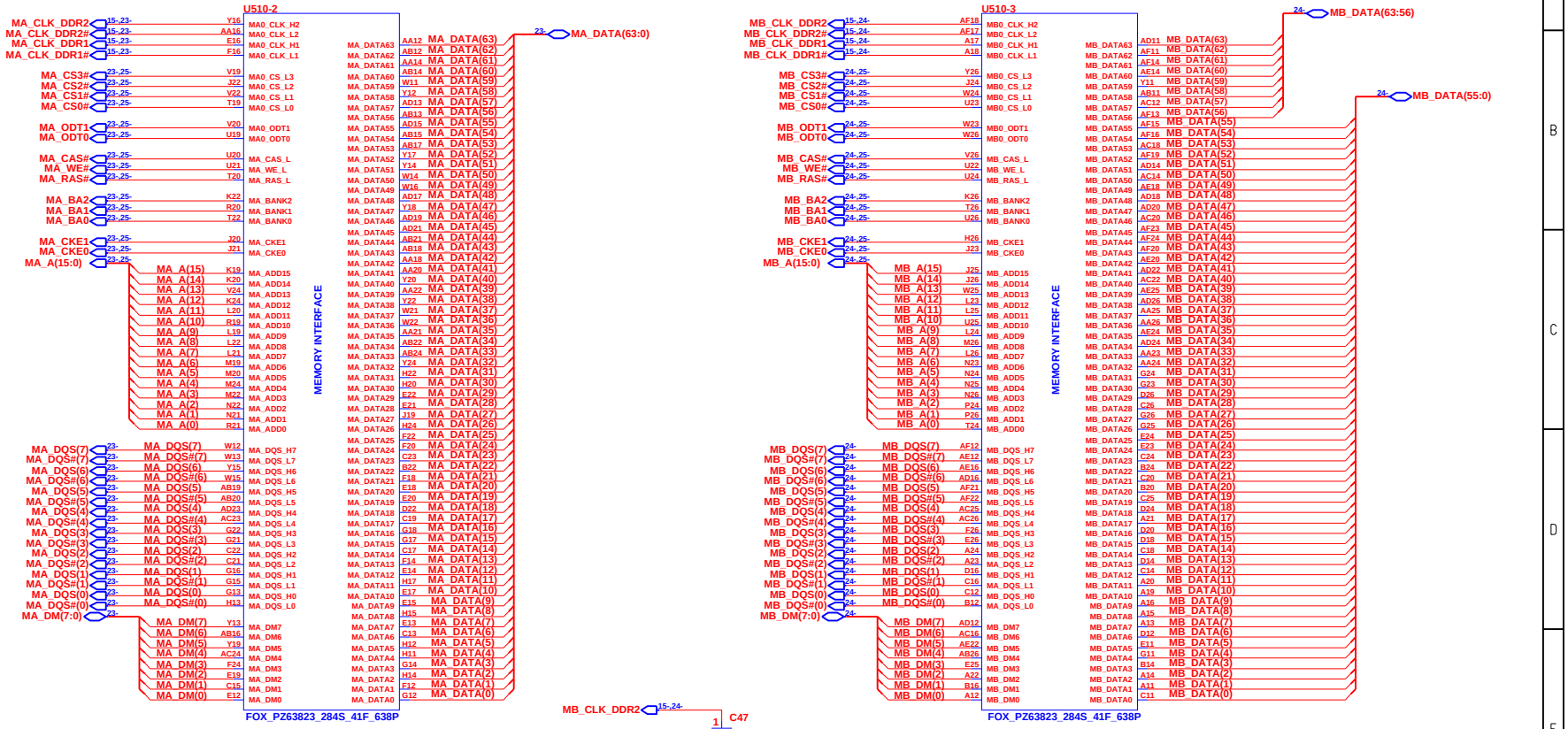

INVENTEC

TITLE *Phoenix/Sacramento 10A*
CPU-2

SIZE	CODE	DOC. NUMBER	REV
A3	CS	*Model_No*	*X01*

CHANGE by *TIGER* *8-Nov-2007*

SHEET 15 OF 54

hexainf@hotmail.com
GRATIS - FREE

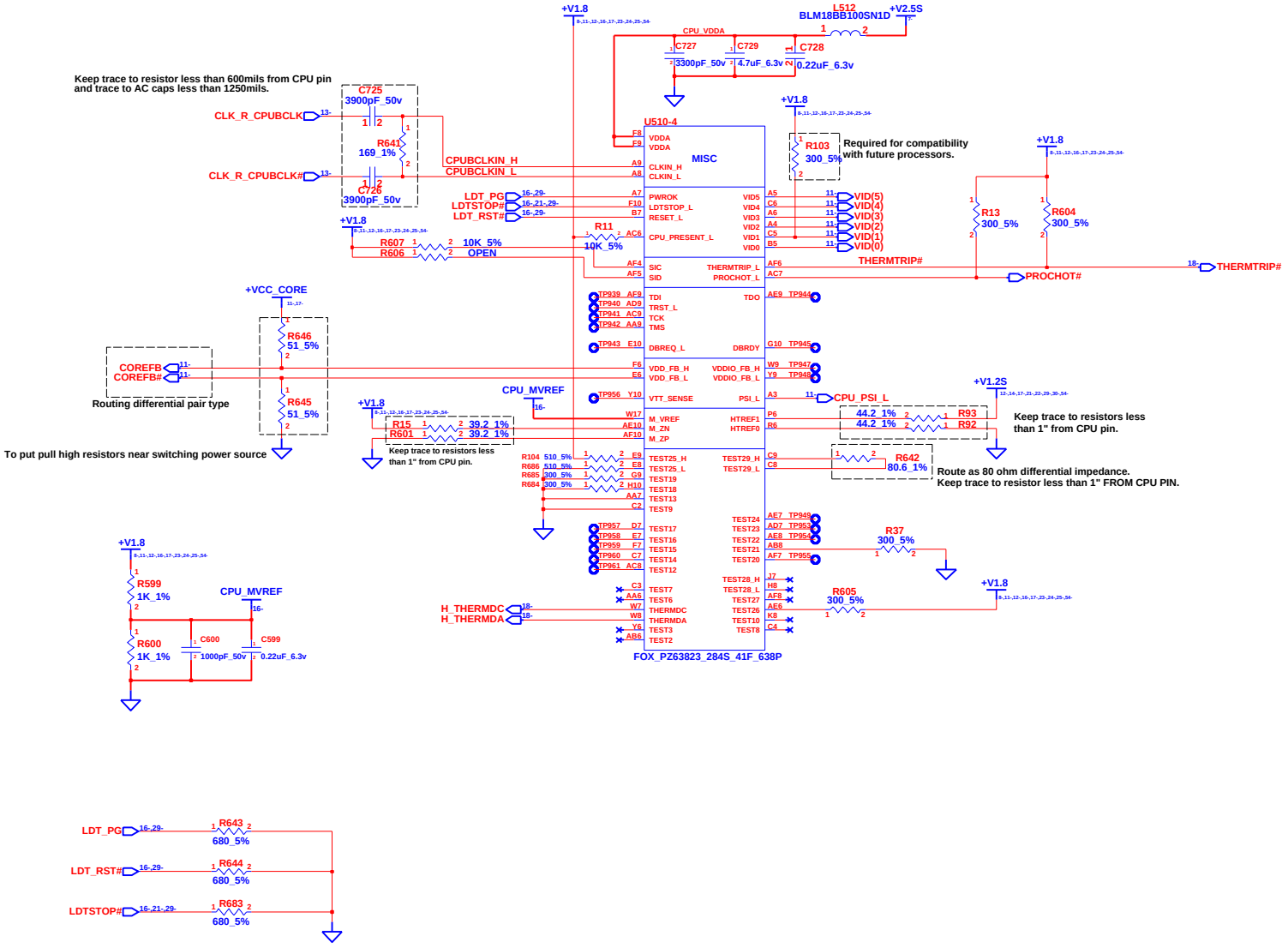

INVENTEC			
TITLE: Phoenix/Sacramento 10A CPU-3			
SIZE A3	CODE CS	DOC. NUMBER Model_No	REV X01
CHANGE by TIGER	19-Dec-2007	SHEET 16 OF 54	

hexainf@hotmail.com
GRATIS - FREE

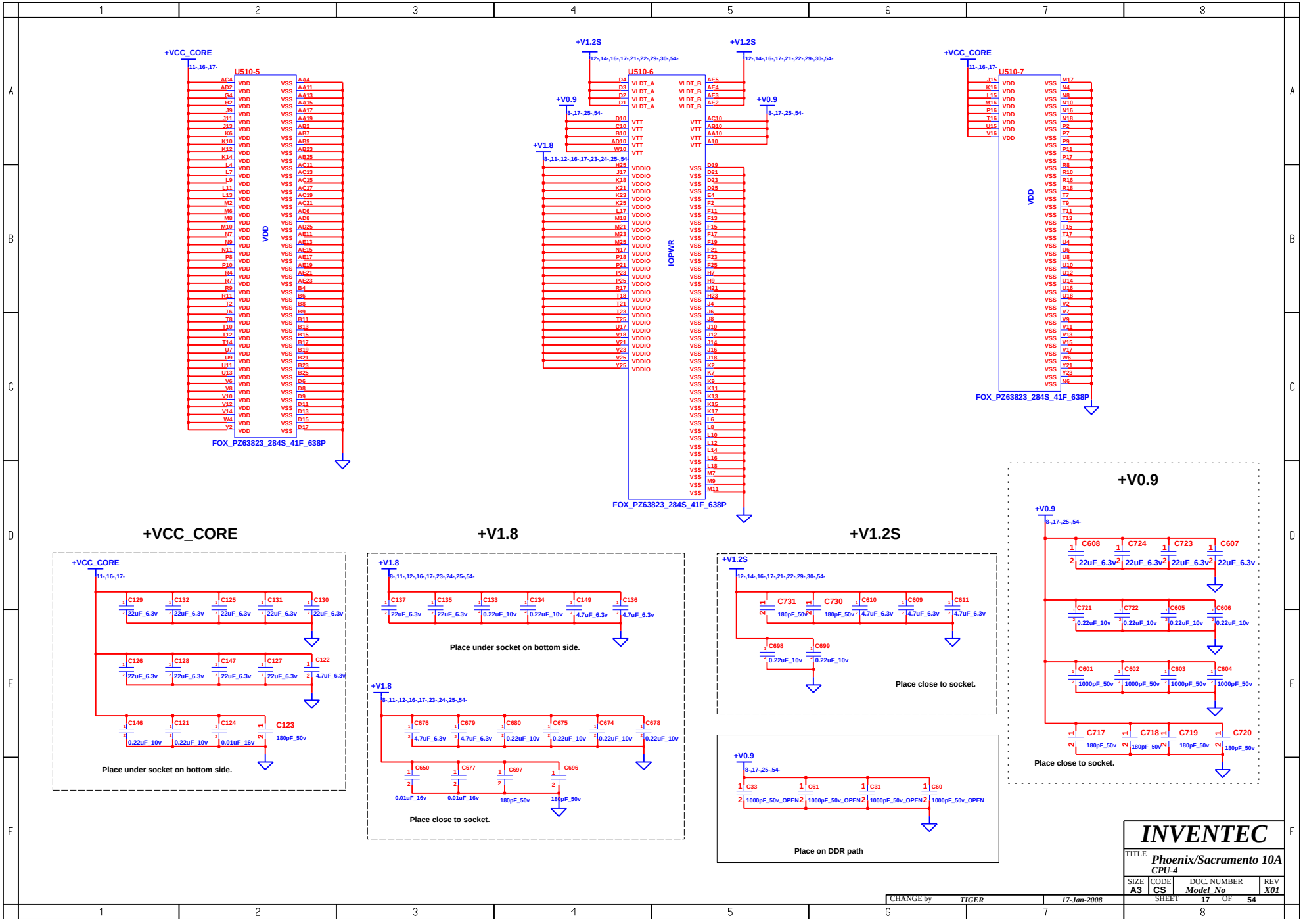

hexainf@hotmail.com
GRATIS - FREE

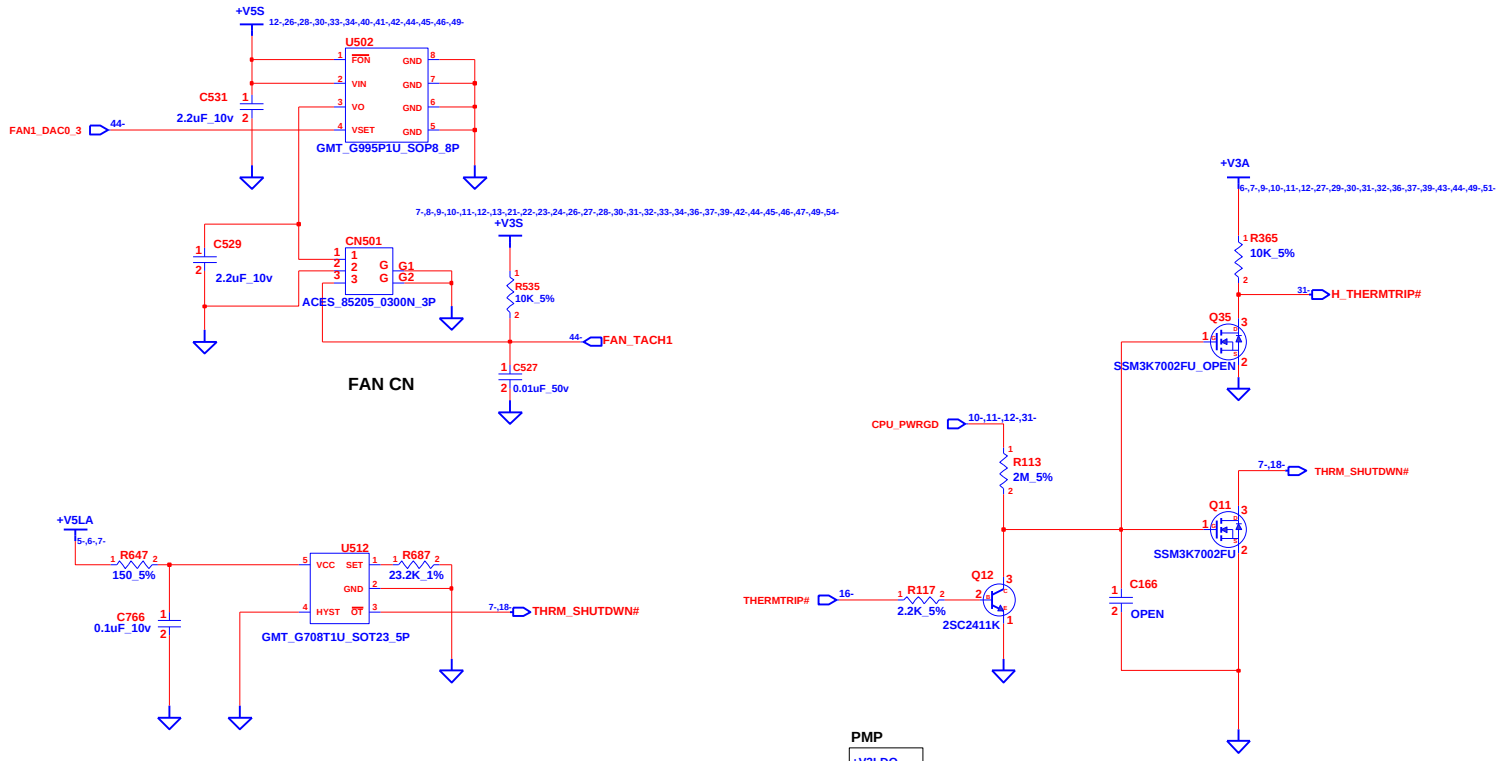

Thermal shoutdown at 88.5C +/-3C from 60C to 100C

$R_{SET} = 0.0012 * T^2 - 0.9308 * T + 96.147$

Hysteresis is 30C

INVENTEC			
TITLE: *Phoenix/Sacramento 10A* *THERMAL&FAN CONTROLLER*			
SIZE: A3	CODE: CS	DOC. NUMBER: *Model_No*	REV: *X01*
CHANGE by: *TIGER*	*13-Aug-2007*	SHEET 18 OF 54	

hexainf@hotmail.com
GRATIS - FREE

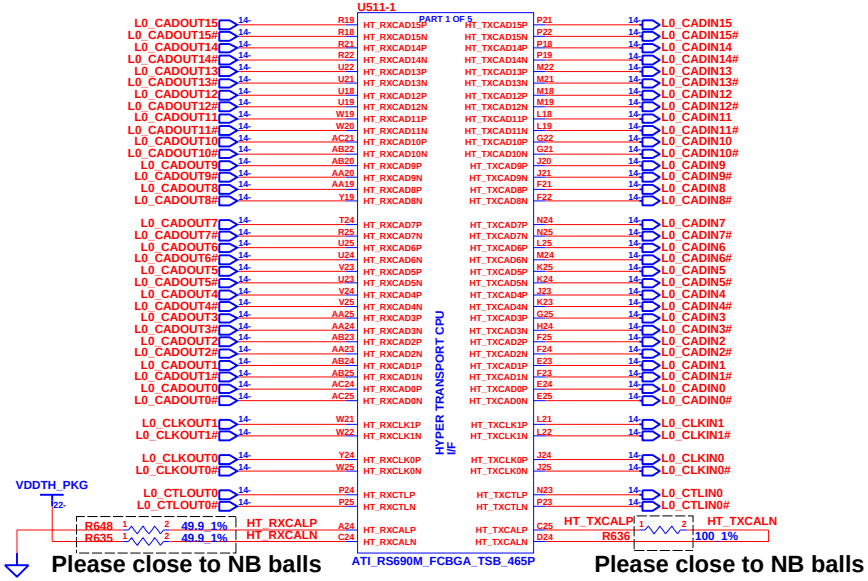

CHANGE by	TIGER	29-Oct-2007	

INVENTEC

TITLE *Phoenix/Sacramento 10A*
N/B-1

SIZE	CODE	DOC. NUMBER	REV
A3	CS	*Model_No*	*X01*

SHEET 19 OF 54

hexainf@hotmail.com
GRATIS - FREE

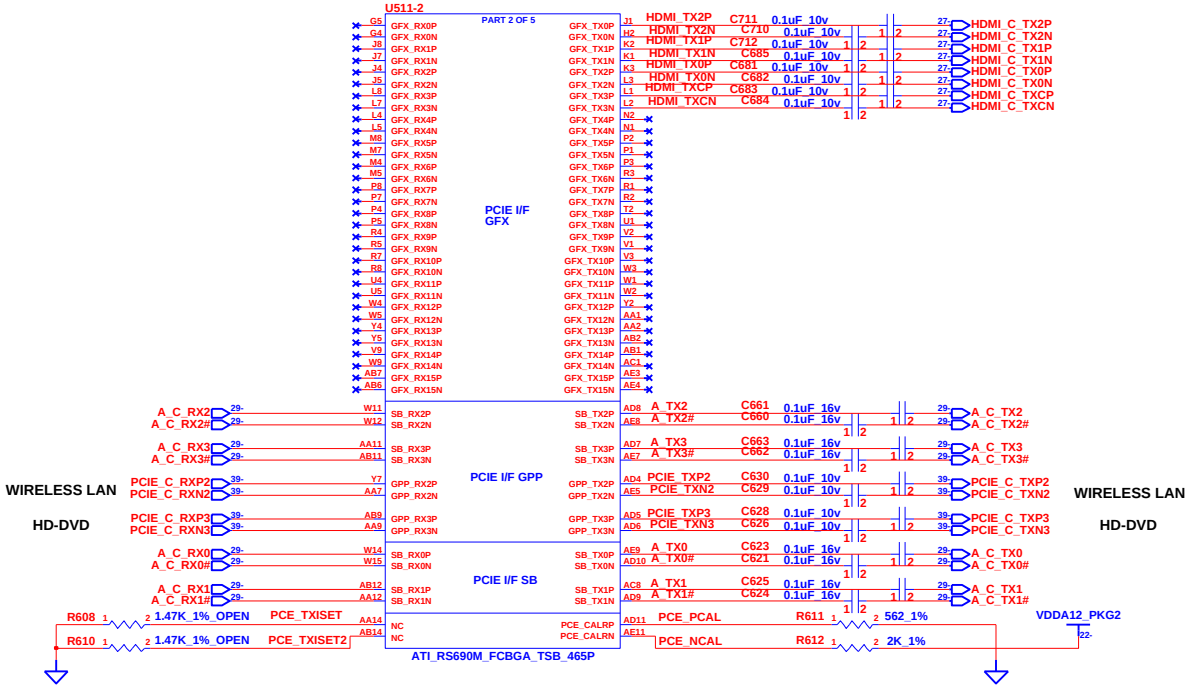

CHANGE by	TIGER	29-Oct-2007	

INVENTEC

TITLE: *Phoenix/Sacramento 10A N/B-2*

SIZE	CODE	DOC. NUMBER	REV
A3	CS	Model_No	X01

SHEET 20 OF 54

hexainf@hotmail.com
GRATIS - FREE

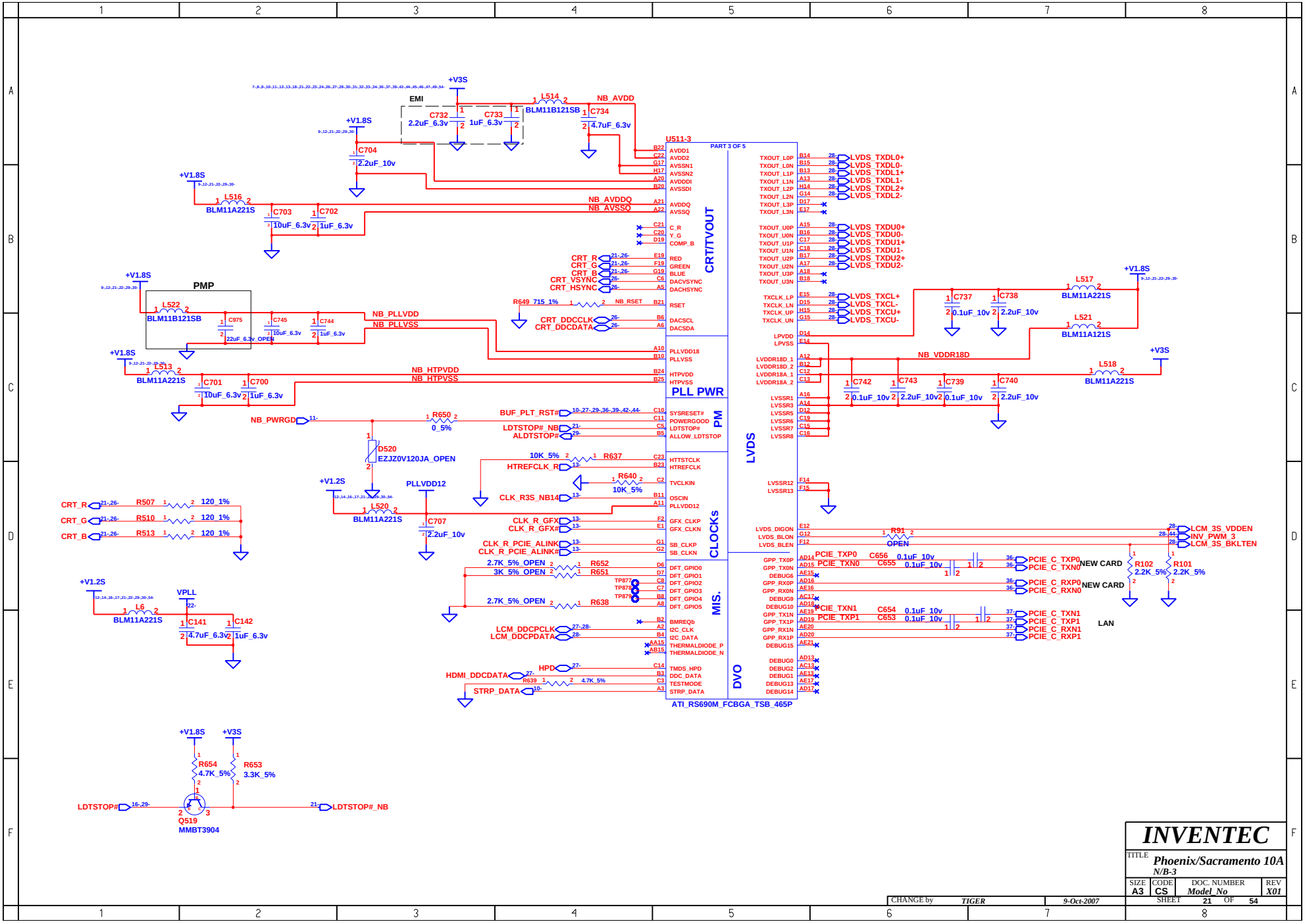

hexainf@hotmail.com
GRATIS - FREE

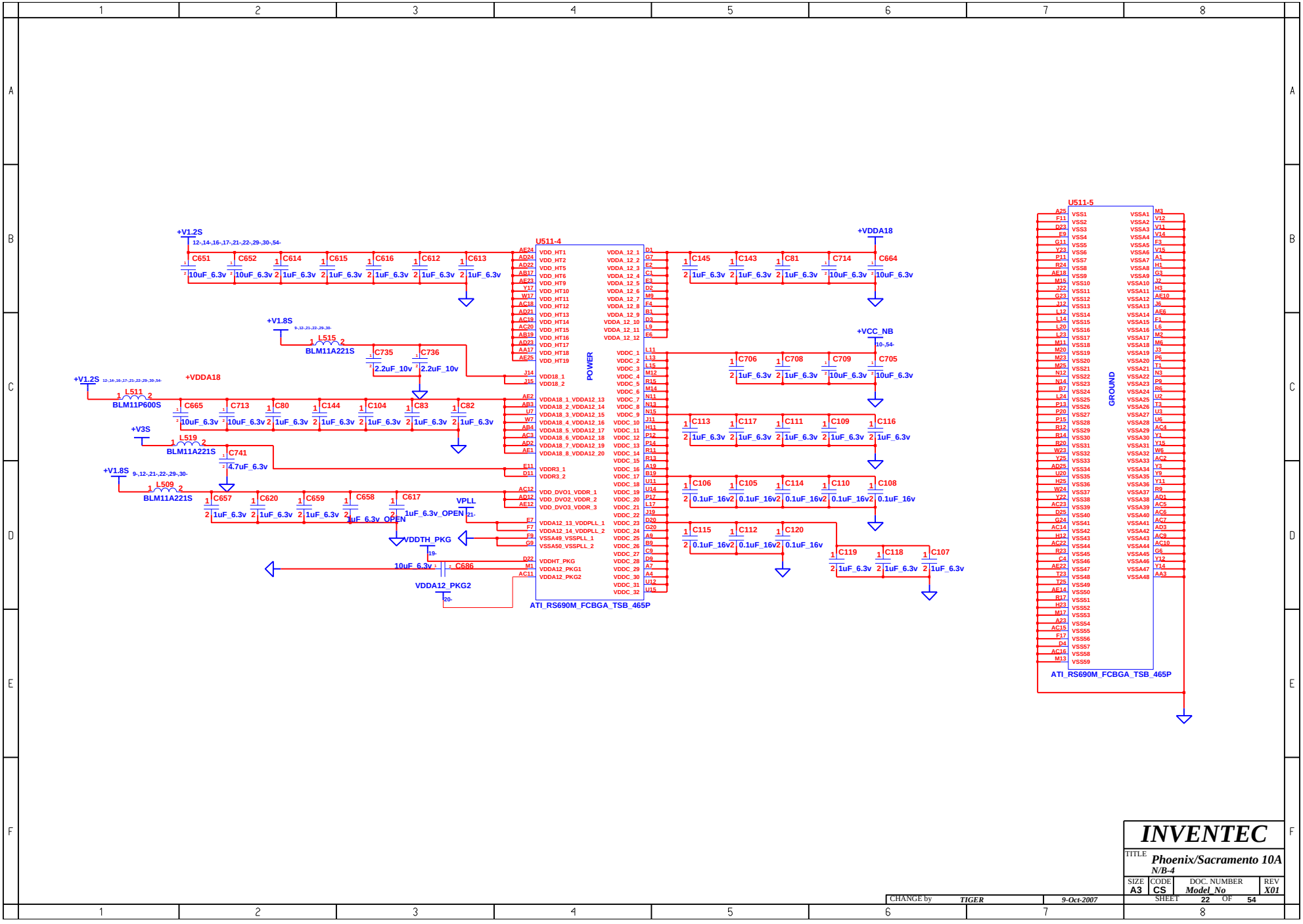

hexainf@hotmail.com
GRATIS - FREE

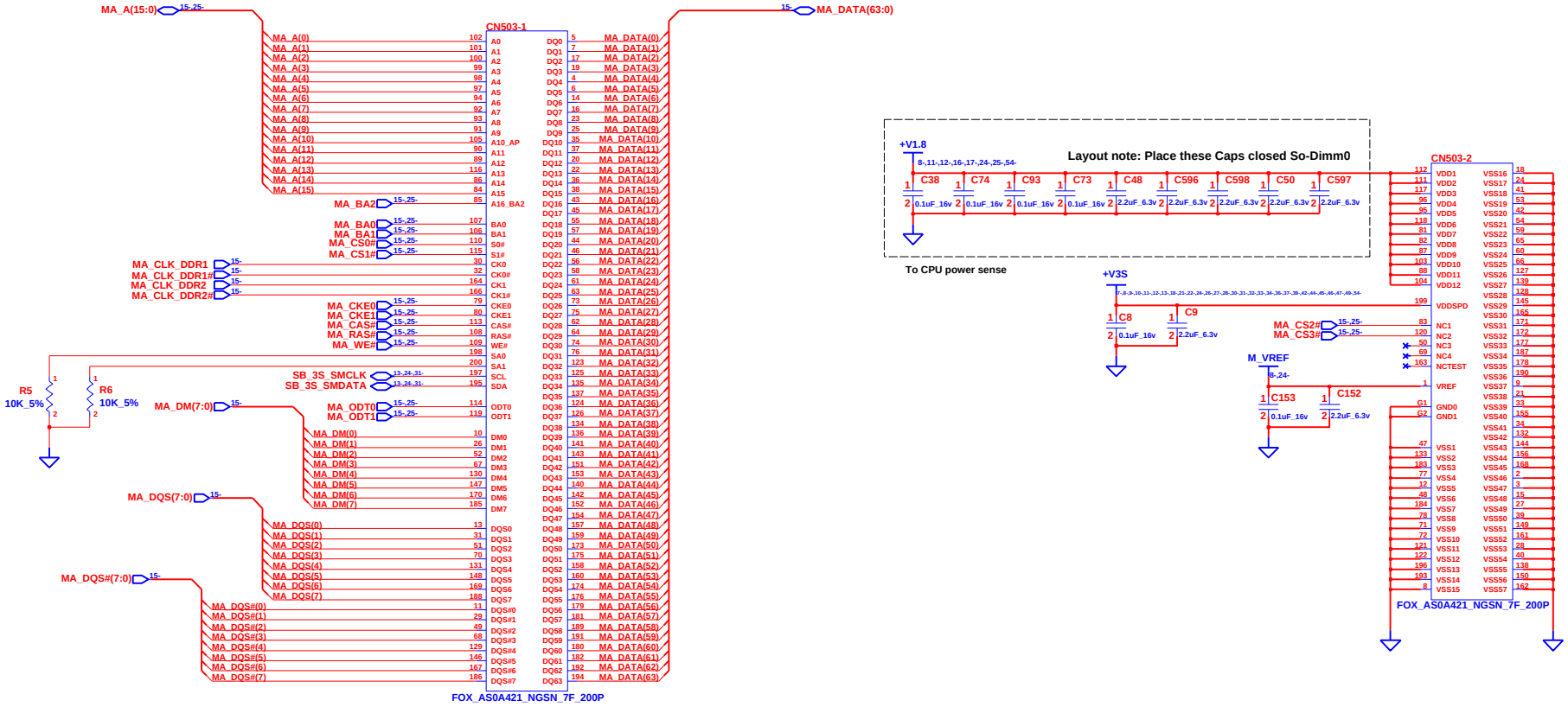

DIMM0_BTM_9.2mm

INVENTEC			
TITLE	Phoenix/Sacramento 10A DDR2-DIMM-1		
SIZE A3	CODE CS	DOC. NUMBER Model_No	REV X01
CHANGE by TIGER	9-Oct-2007	SHEET 23 OF 54	

hexainf@hotmail.com
GRATIS - FREE

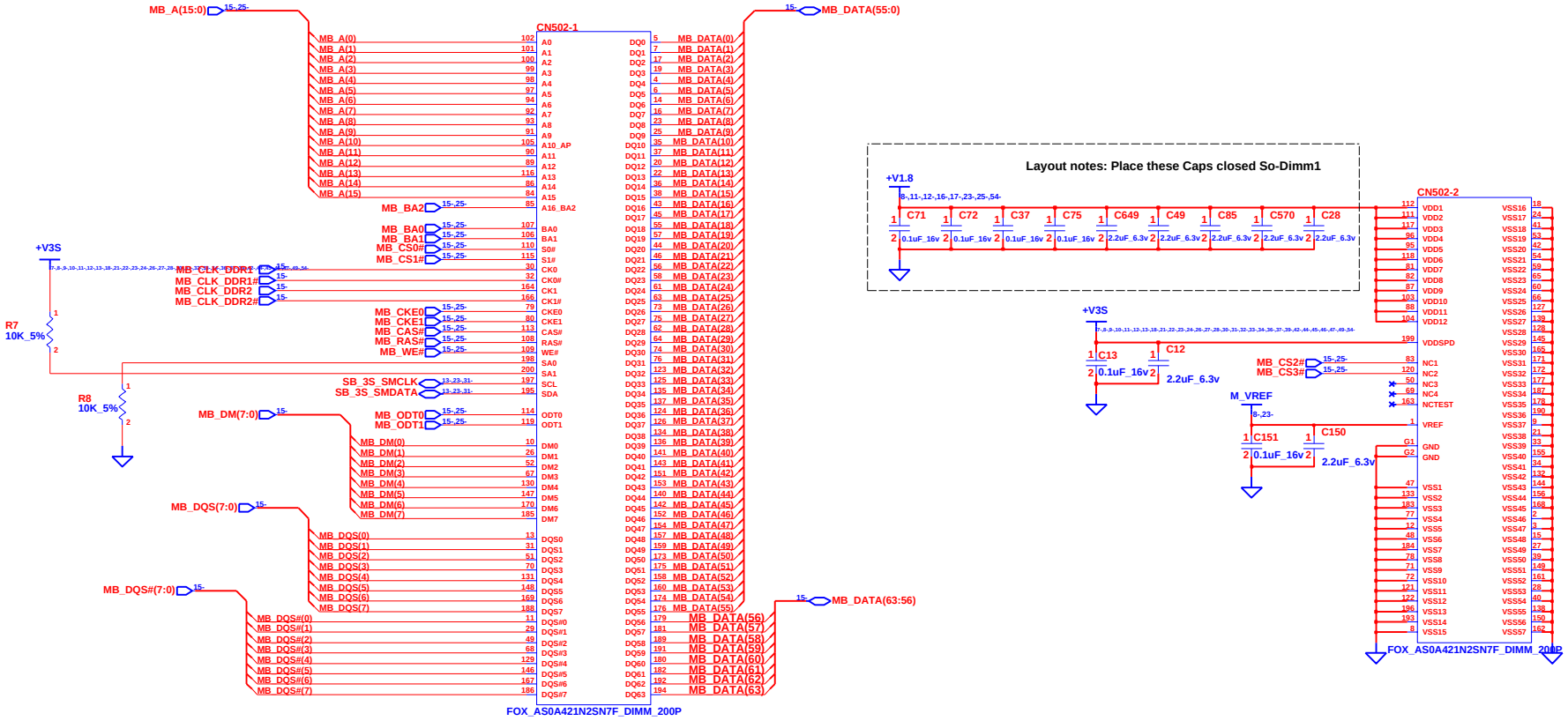

DIMM1_TOP_5.2mm

INVENTEC			
TITLE: Phoenix/Sacramento 10A DDR2-DIMM-0			
SIZE: A3	CODE: CS	DOC. NUMBER: Model_No	REV: X01
CHANGE by: TIGER	27-Nov-2007	SHEET 24 OF 54	

hexainf@hotmail.com
GRATIS - FREE

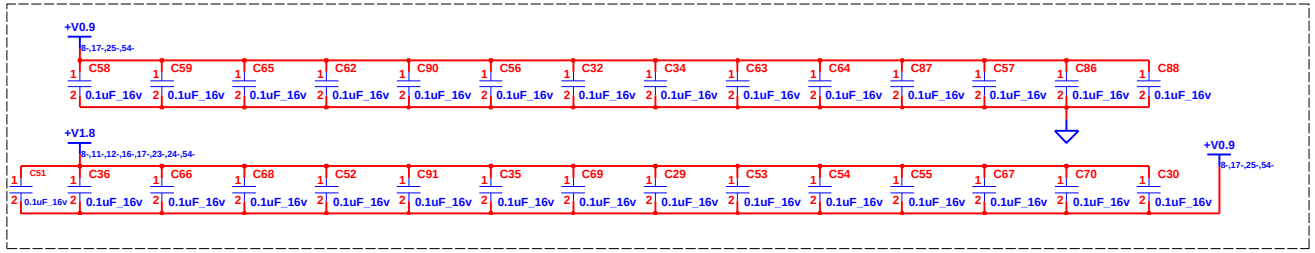

To CPU power sense

Place CAPs close to DIMM

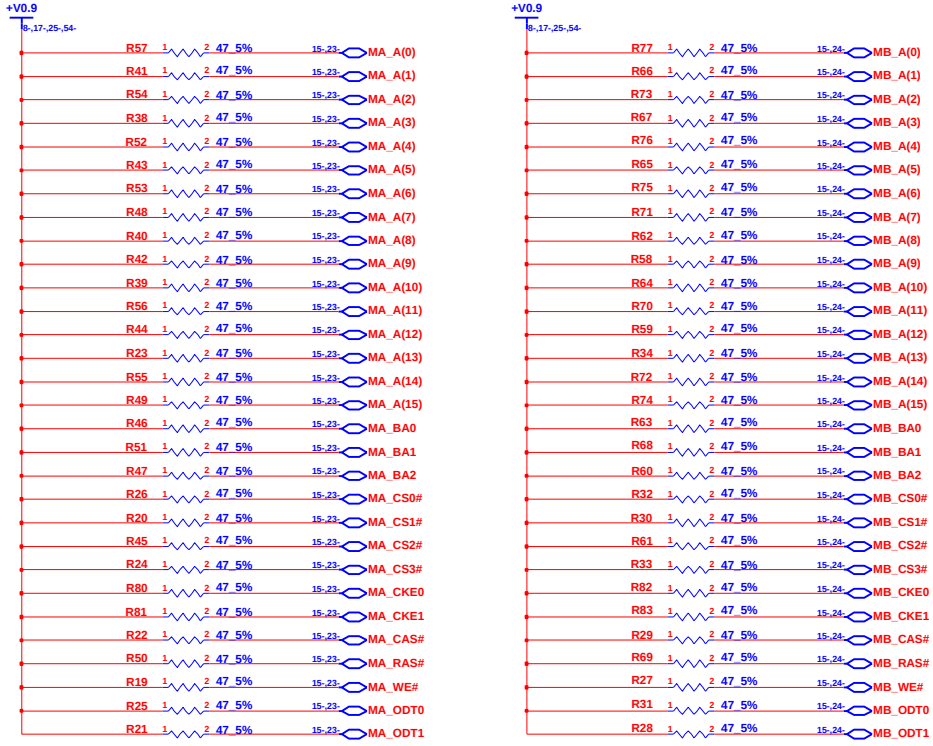

INVENTEC			
TITLE	Phoenix/Sacramento 10A DDR2-DAMPING		
SIZE A3	CODE CS	DOC. NUMBER Model_No	REV X01
CHANGE by TIGER	12-Sep-2007	SHEET 25 OF 54	

hexainf@hotmail.com
GRATIS - FREE

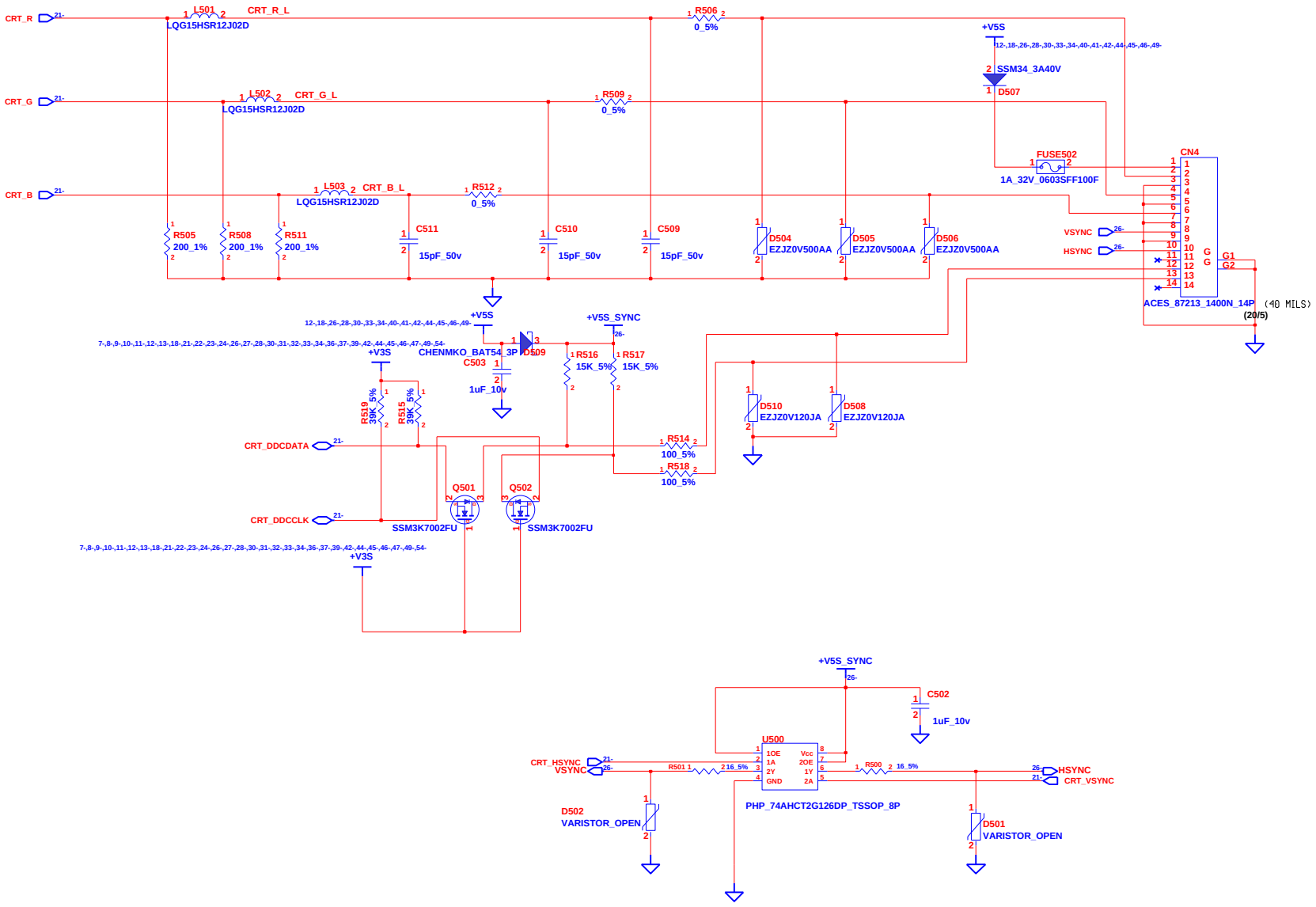

INVENTEC

TITLE **Phoenix/Sacramento 10A**
RGB CONNECTOR

SIZE	CODE	DOC. NUMBER	REV
A3	CS	Model_No	X01

SHEET 26 OF 54

CHANGE by TIGER 31-Oct-2007

hexainf@hotmail.com
GRATIS - FREE

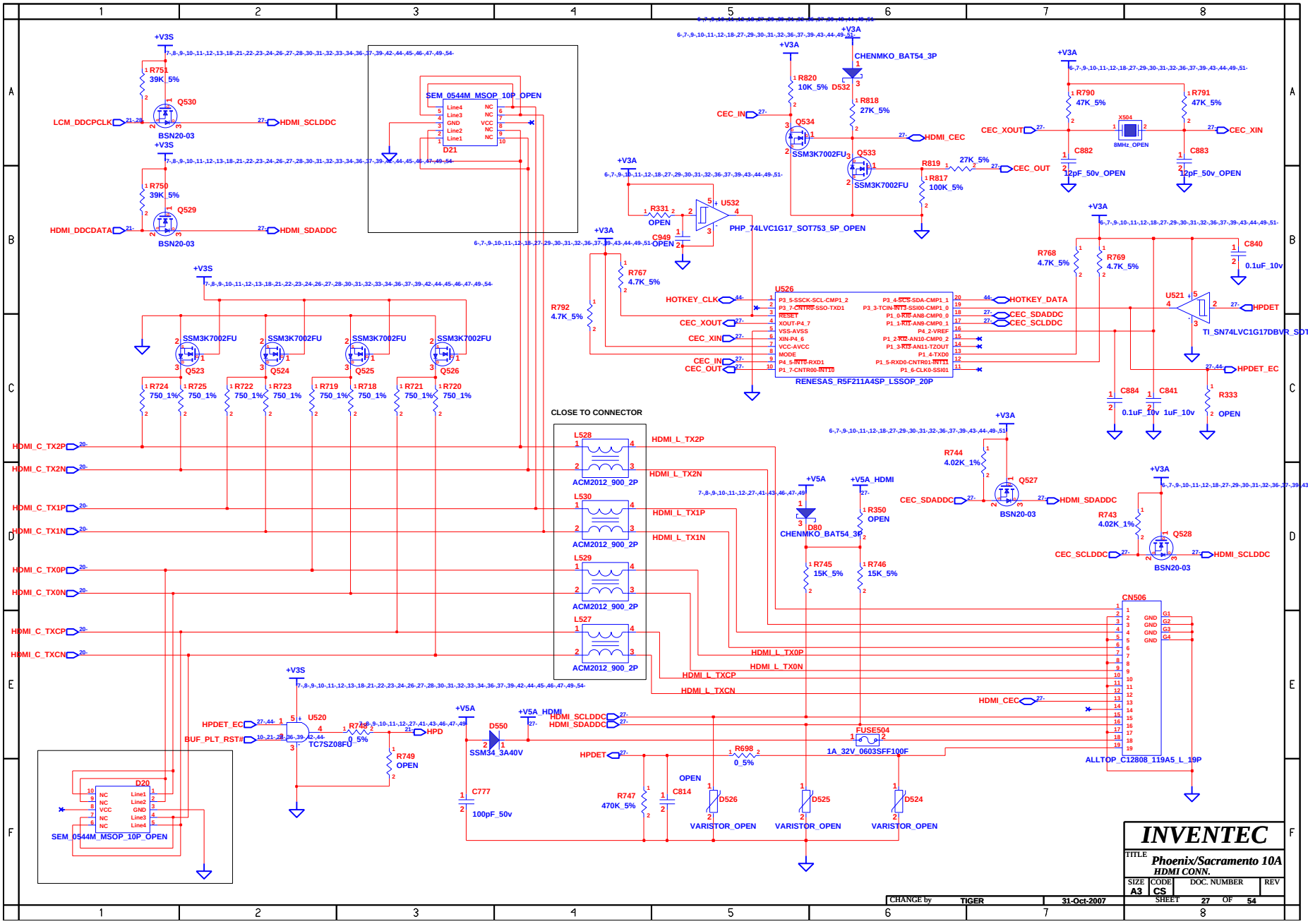

hexainf@hotmail.com
GRATIS - FREE

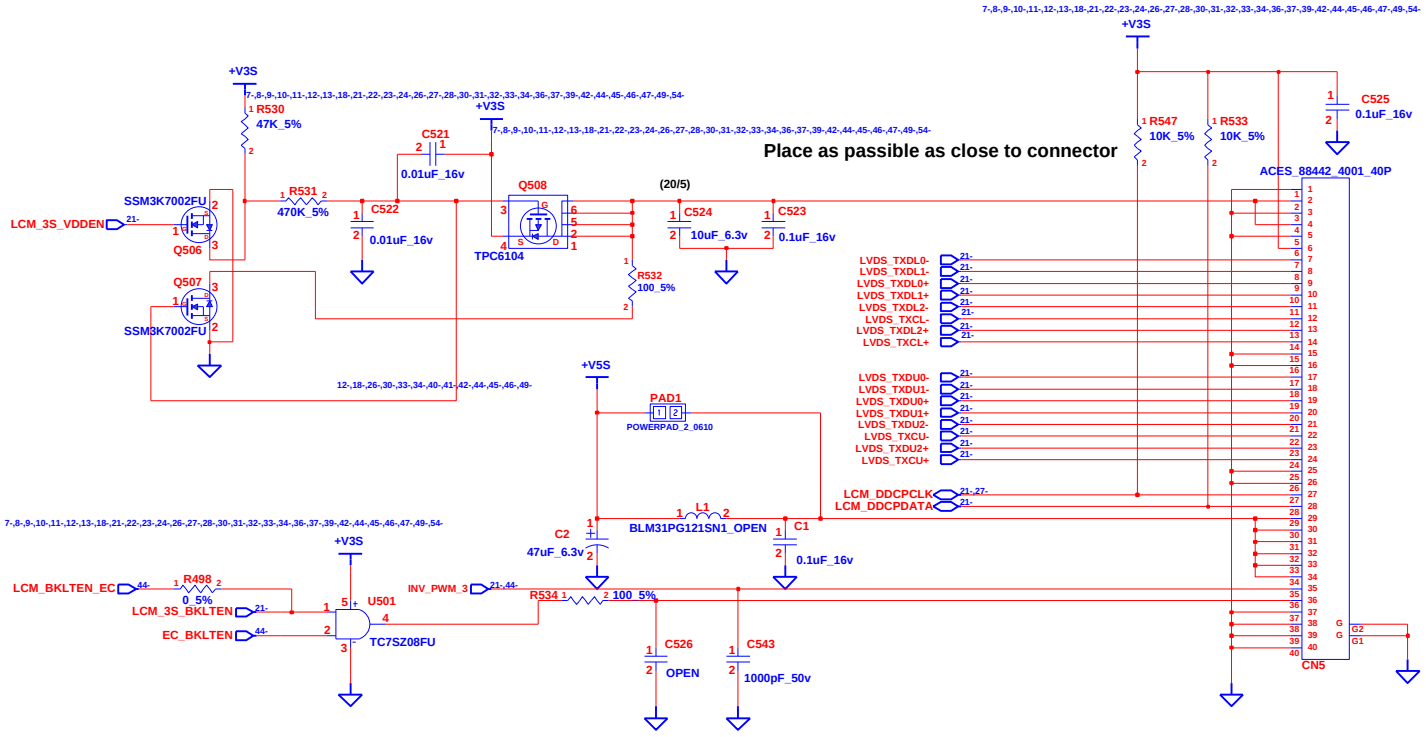

CHANGE by	TIGER	27-Sep-2003	

INVENTEC

TITLE: *Phoenix/Sacramento 10A LCM*

SIZE	CODE	DOC. NUMBER	REV
A3	CS	Model_No	X01

SHEET 28 OF 54

hexainf@hotmail.com
GRATIS - FREE

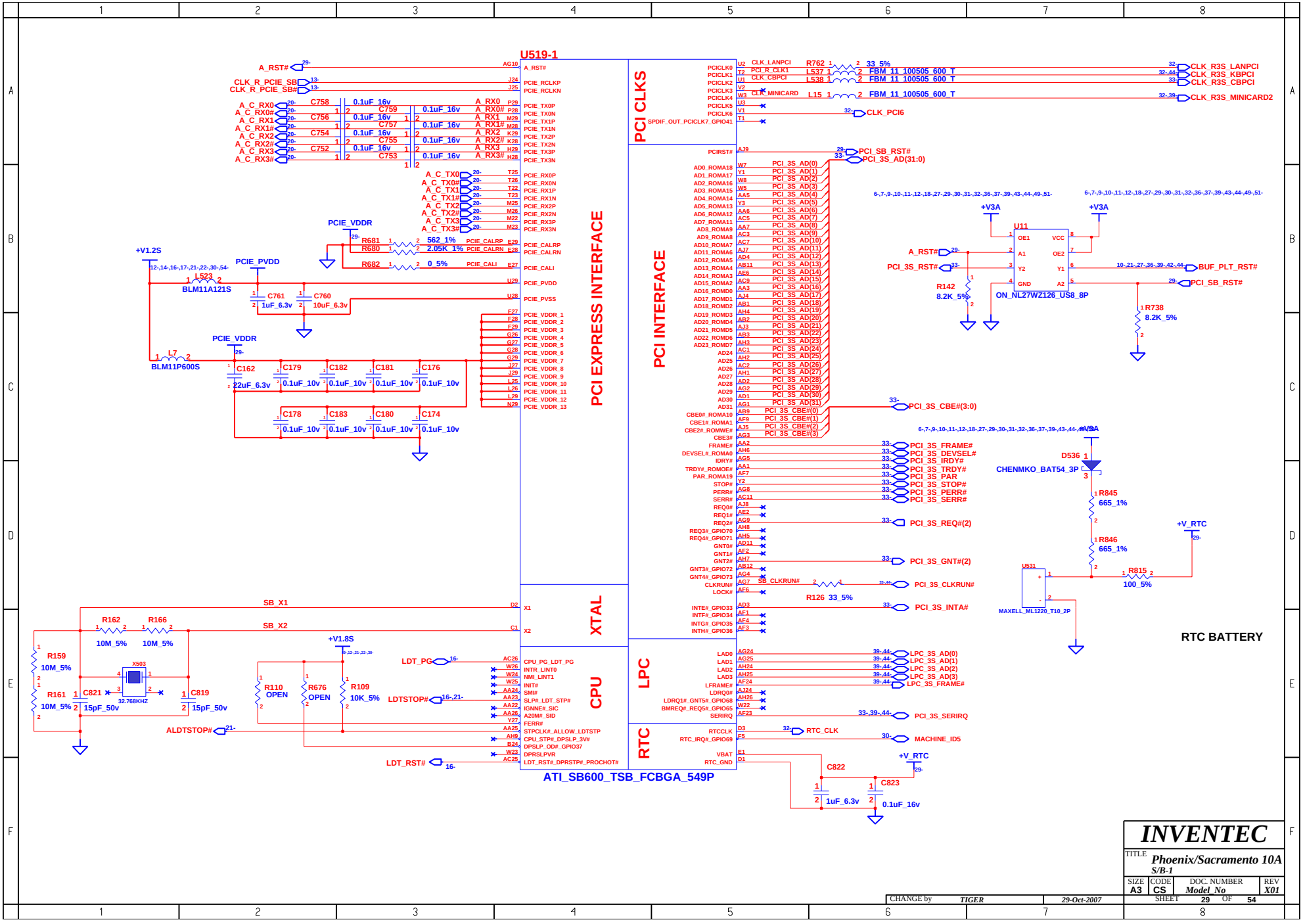

hexainf@hotmail.com
GRATIS - FREE

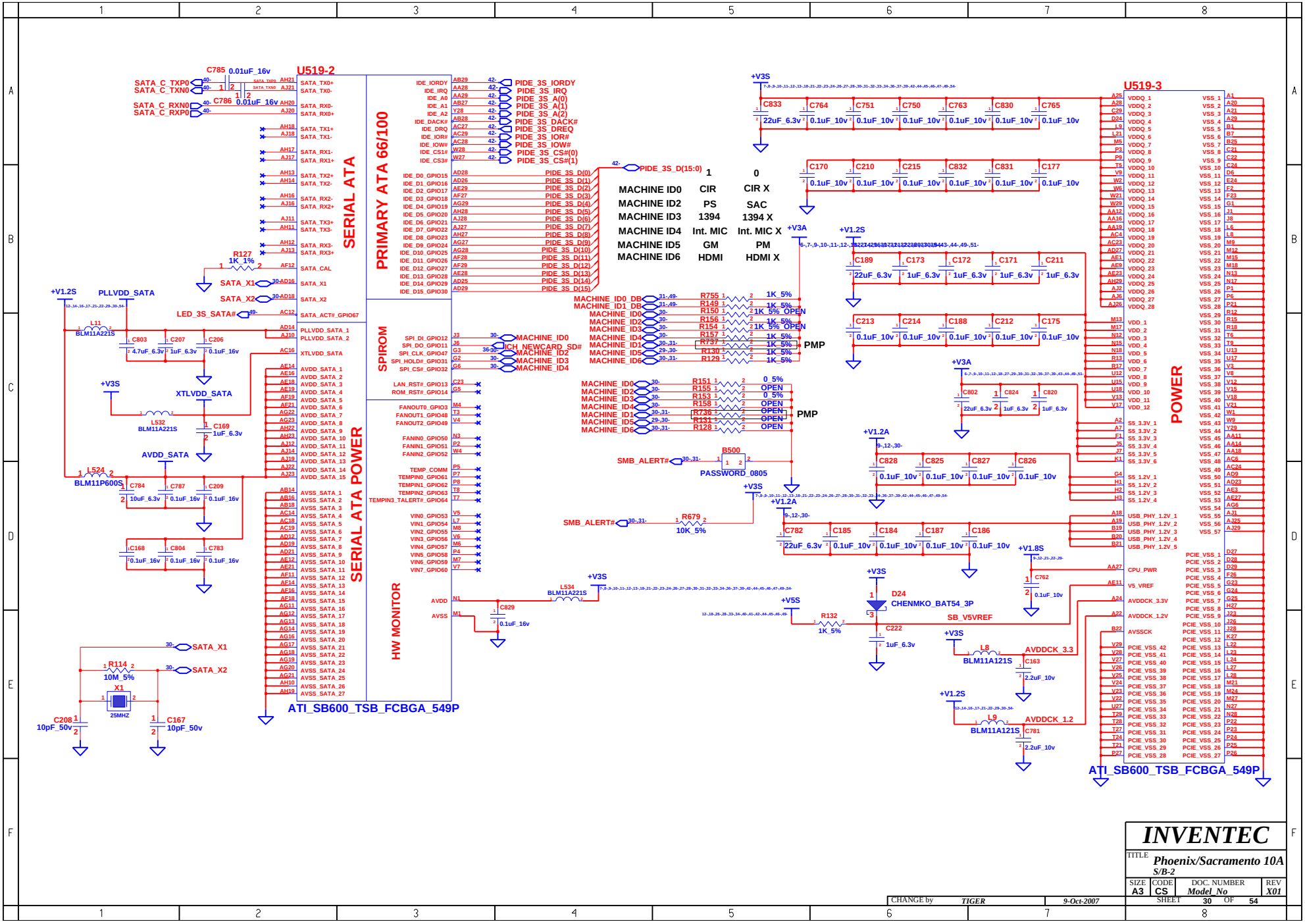

MACHINE ID0	CIR	CIR X
MACHINE ID2	PS	SAC
MACHINE ID3	1394	1394 X
MACHINE ID4	Int. MIC	Int. MIC X
MACHINE ID5	GM	PM
MACHINE ID6	HDMI	HDMI X

INVENTEC	
TITLE	Phoenix/Sacramento 10A S/B-2
SIZE A3	CODE CS
DOC. NUMBER	Model_No
REV	X01
SHEET 30 OF 54	
CHANGE by	TIGER
9-Oct-2007	

hexainf@hotmail.com
GRATIS - FREE

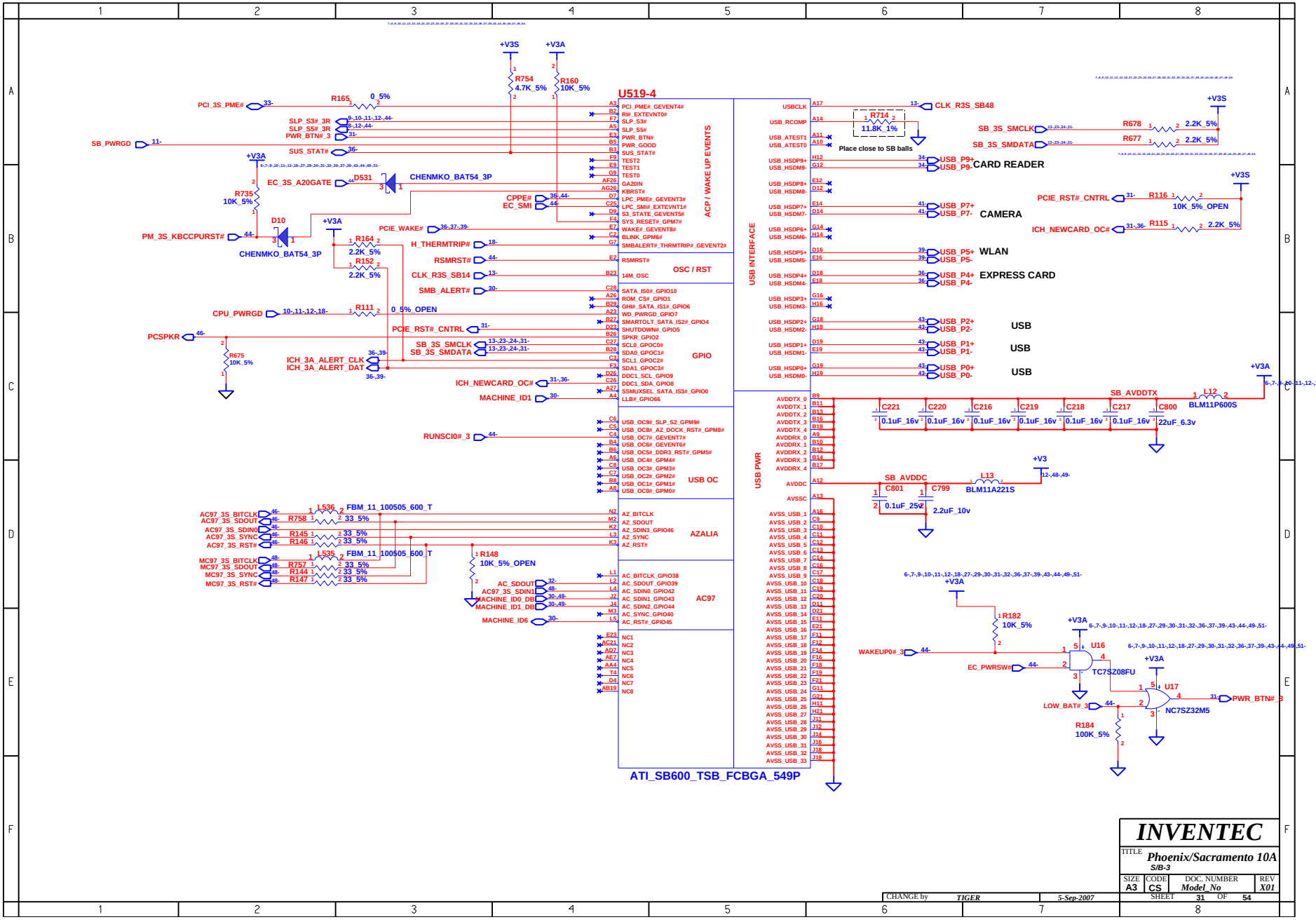

hexainf@hotmail.com
GRATIS - FREE

Required Straps:

	AC_SDOUT	RTC_CLK	CLK_R3S_MINICARD2	PCI_CLK6	PCI_CLK0 PCI_CLK1
PULL HIGH	USE DEBUG STRAPS	INTERNAL RTC ■	USE INT. PLL48	CPU K8 ■	HH: PCI ROM HL: SPI ROM
PULL LOW	IGNORE DEBUG STRAPS ■	EXTERNAL RTC	USE EXT. 48M CLK ■	CPU P4	LH: LPC ROM ■ LL: FWH ROM

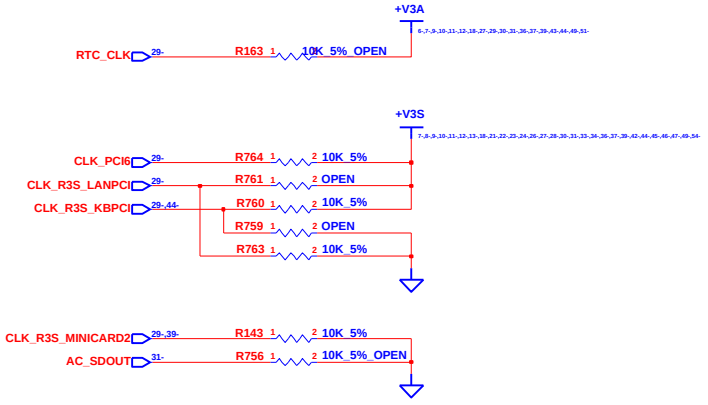

INVENTEC			
TITLE	Phoenix/Sacramento 10A S/B-4		
SIZE A3	CODE CS	DOC. NUMBER Model_No	REV X01
CHANGE by TIGER	19-Dec-2007	SHEET 32 OF 54	

hexainf@hotmail.com
GRATIS - FREE

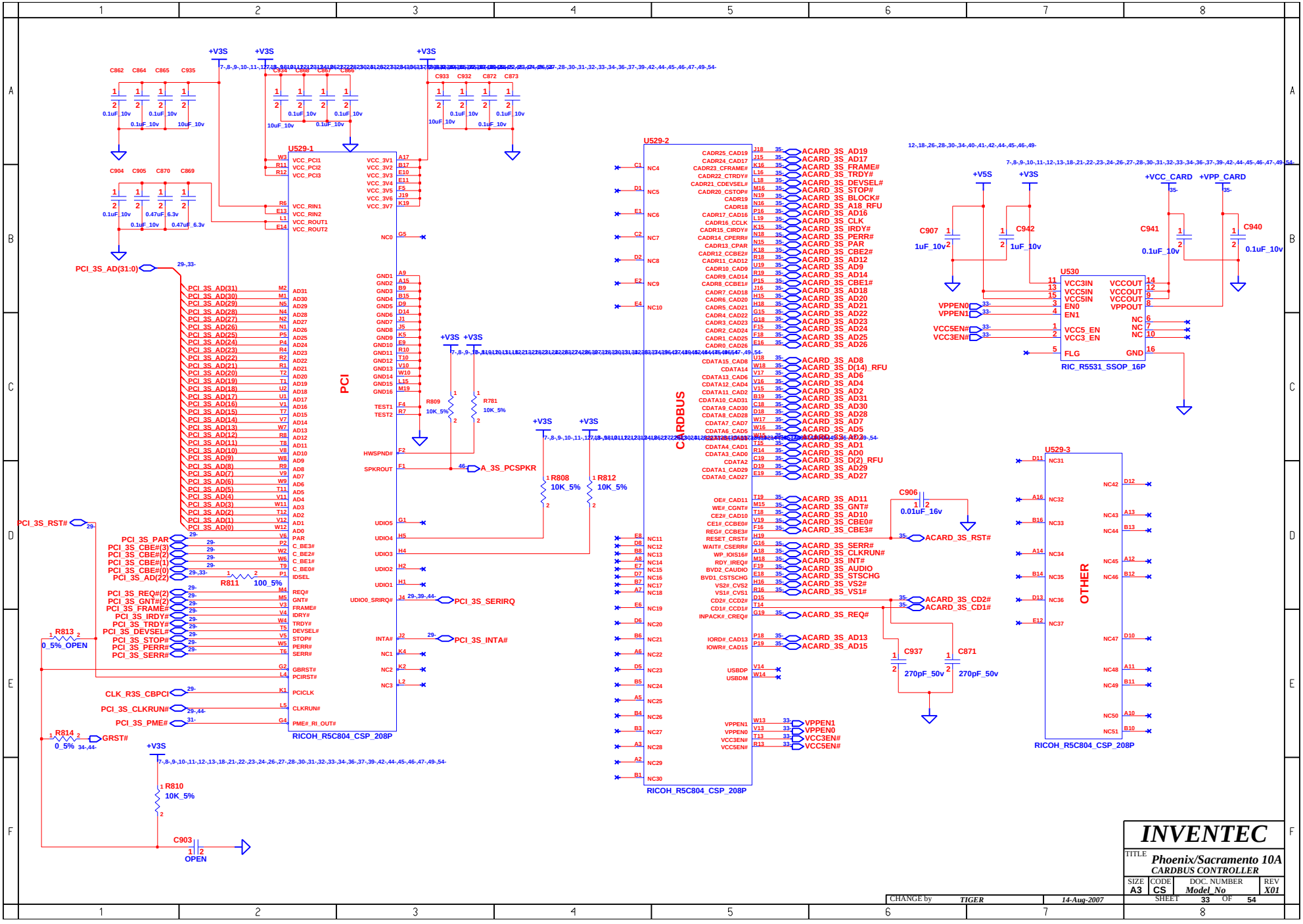

hexainf@hotmail.com
GRATIS - FREE

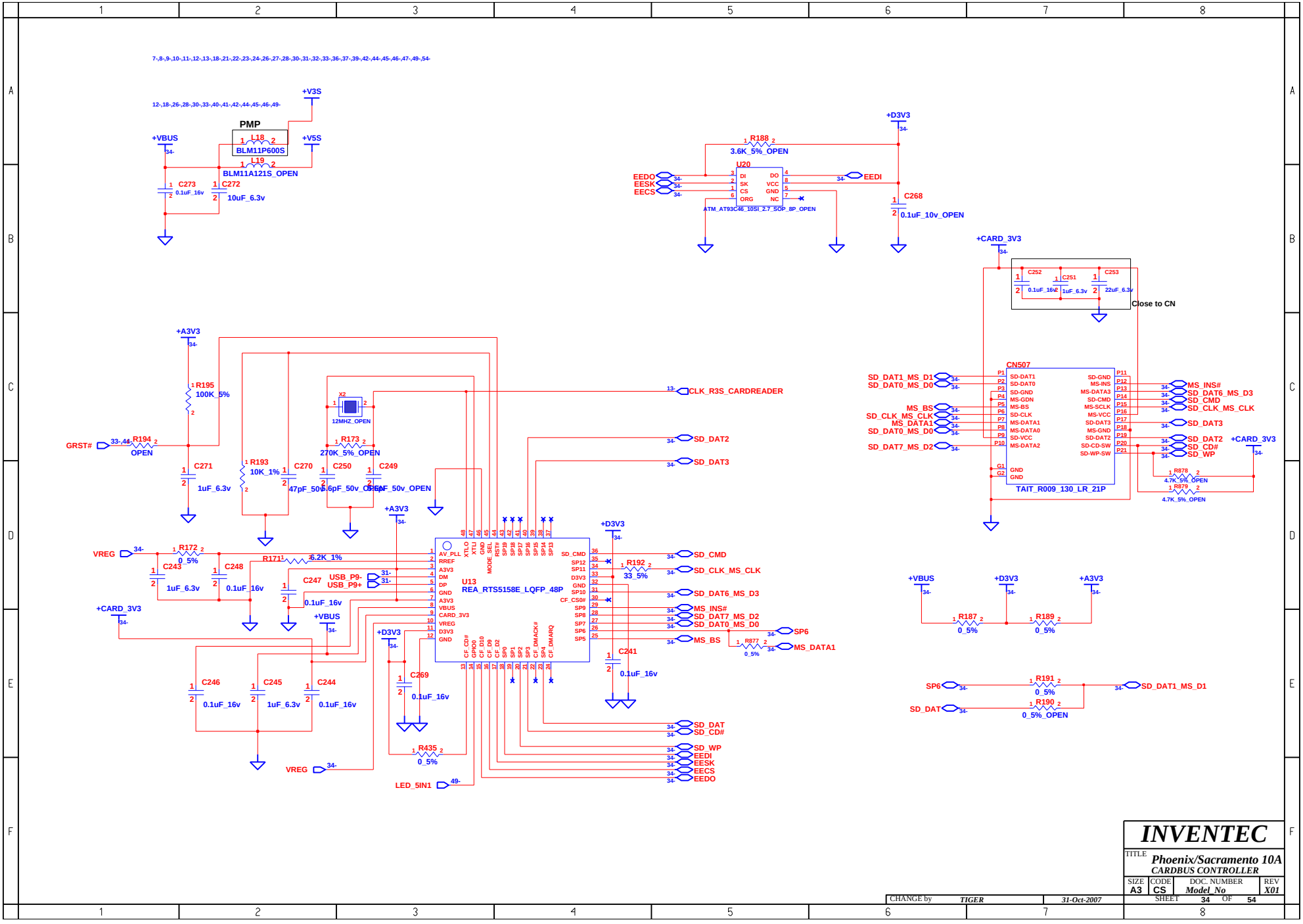

hexainf@hotmail.com
GRATIS - FREE

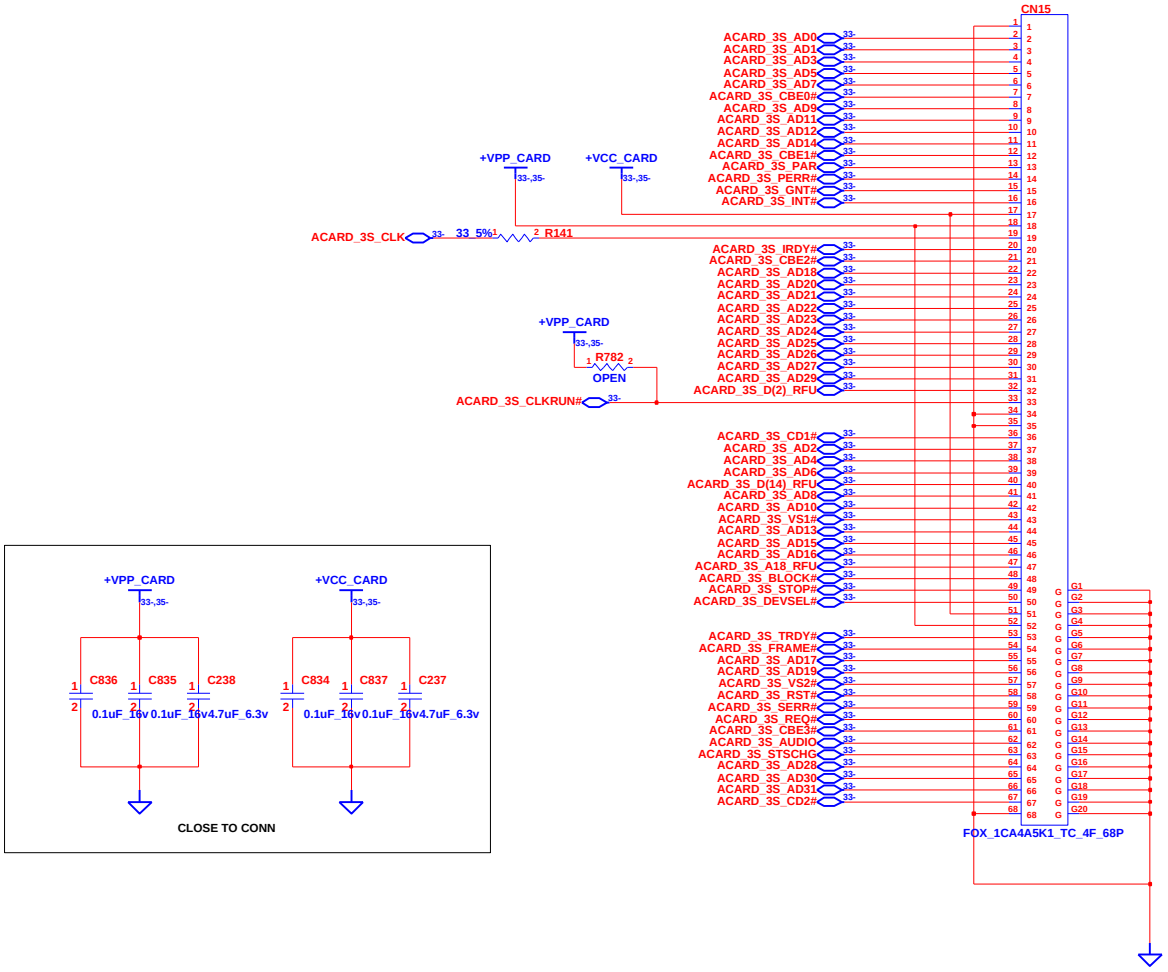

INVENTEC

TITLE: *Phoenix/Sacramento 10A*
PCMCIA

SIZE	CODE	DOC. NUMBER	REV
A3	CS	*Model_No*	*X01*

CHANGE by *TIGER* *31-Oct-2007*

SHEET 35 OF 54

hexainf@hotmail.com
GRATIS - FREE

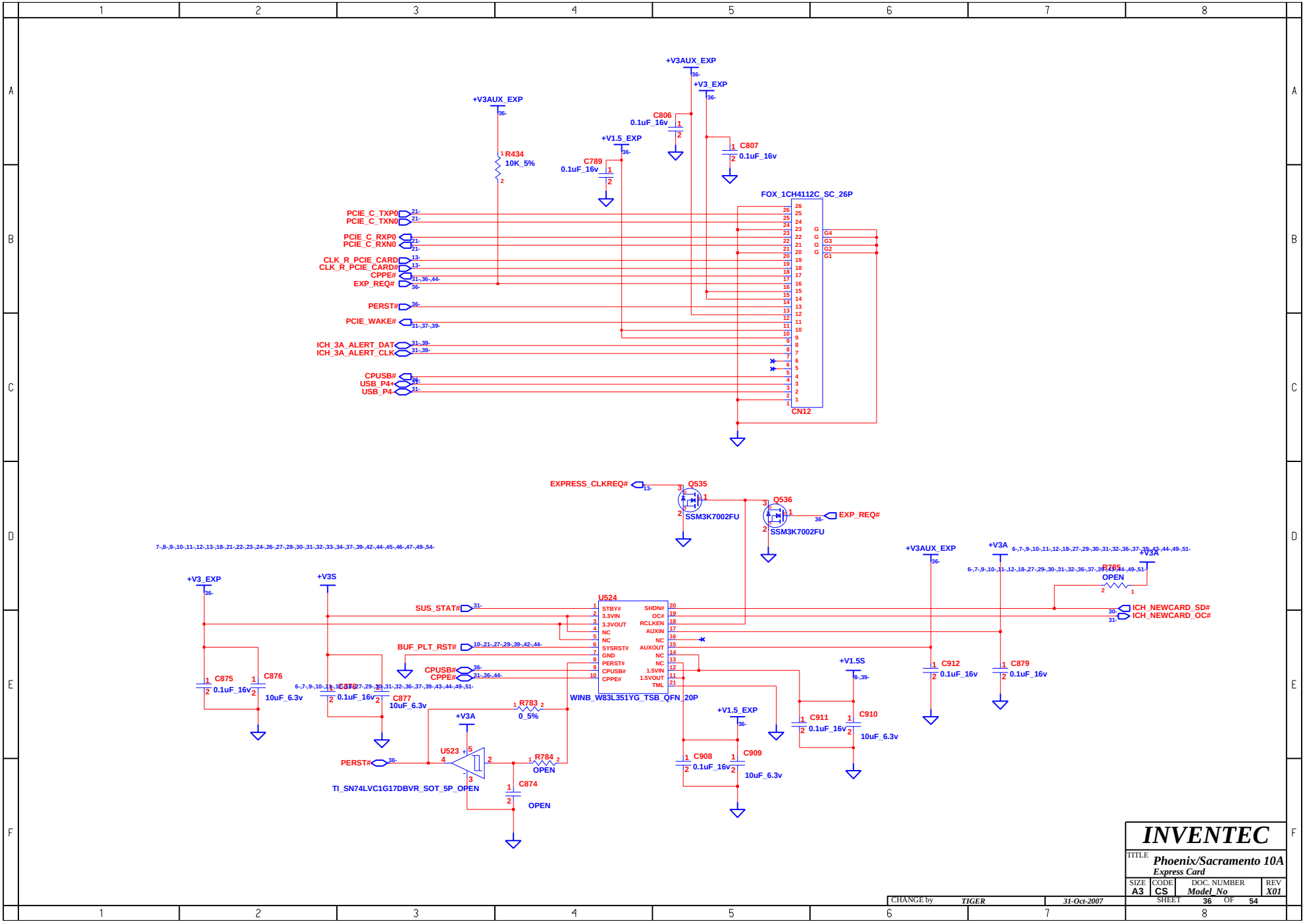

hexainf@hotmail.com
GRATIS - FREE

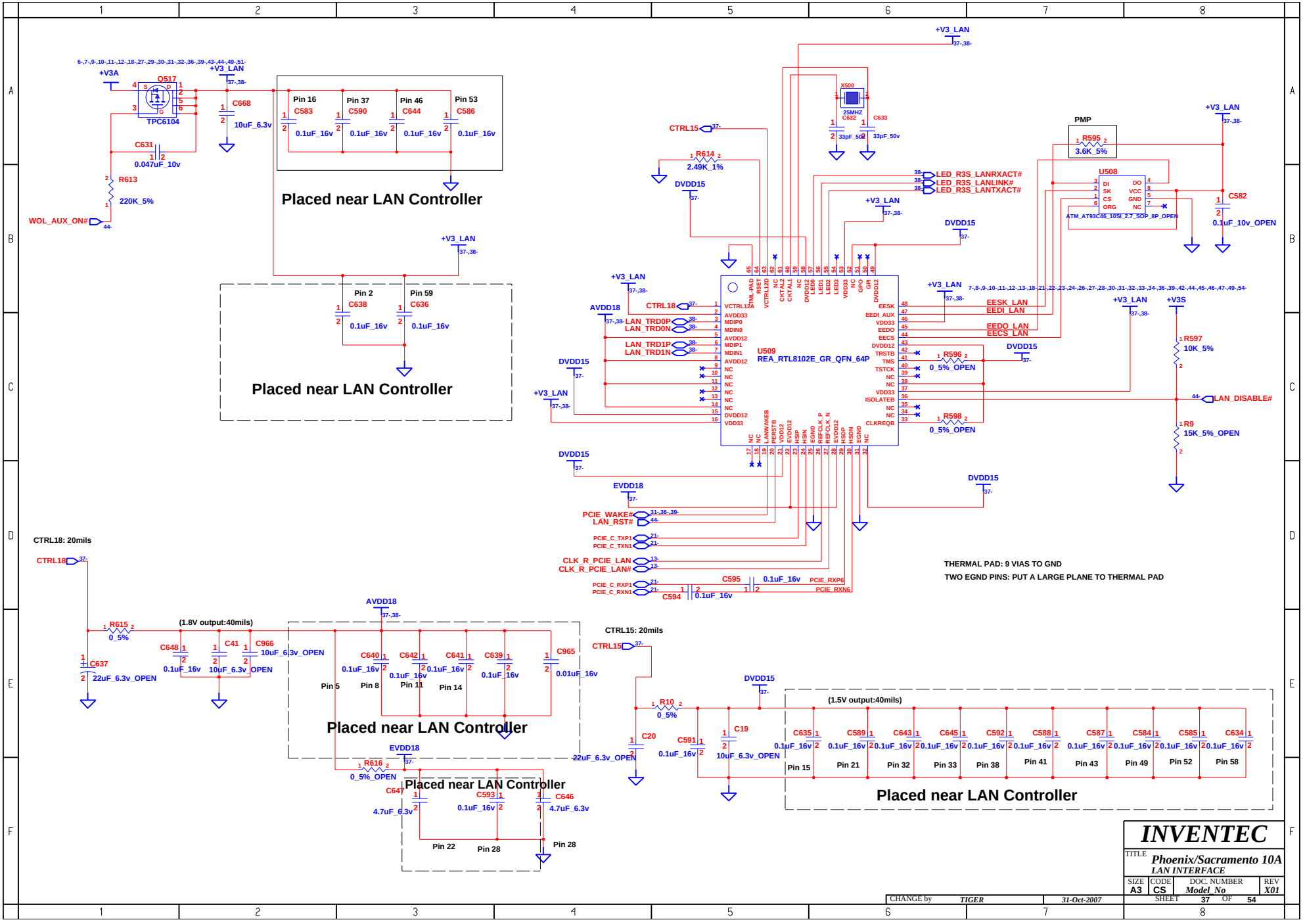

hexainf@hotmail.com
GRATIS - FREE

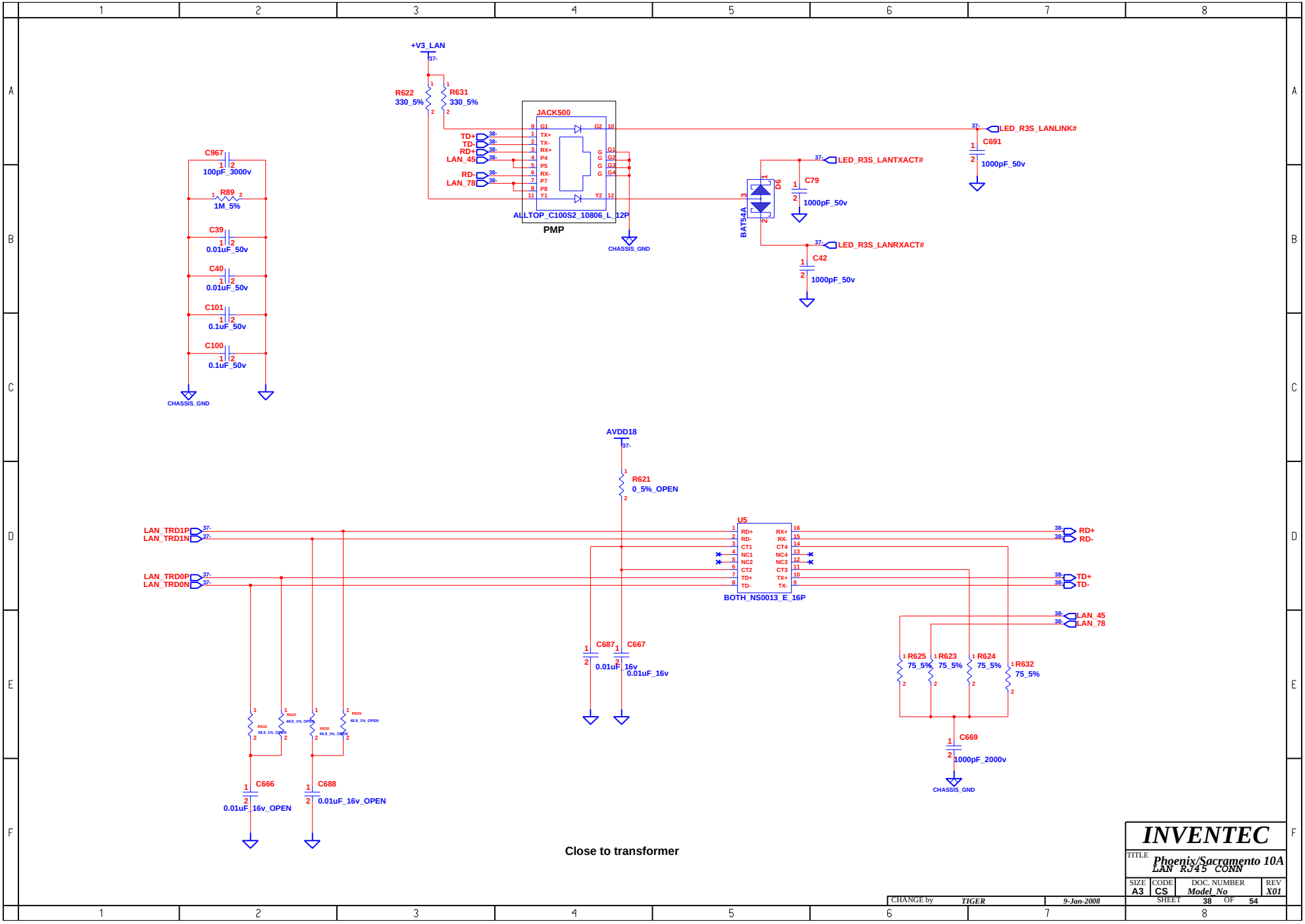

hexainf@hotmail.com
GRATIS - FREE

HD_DVD

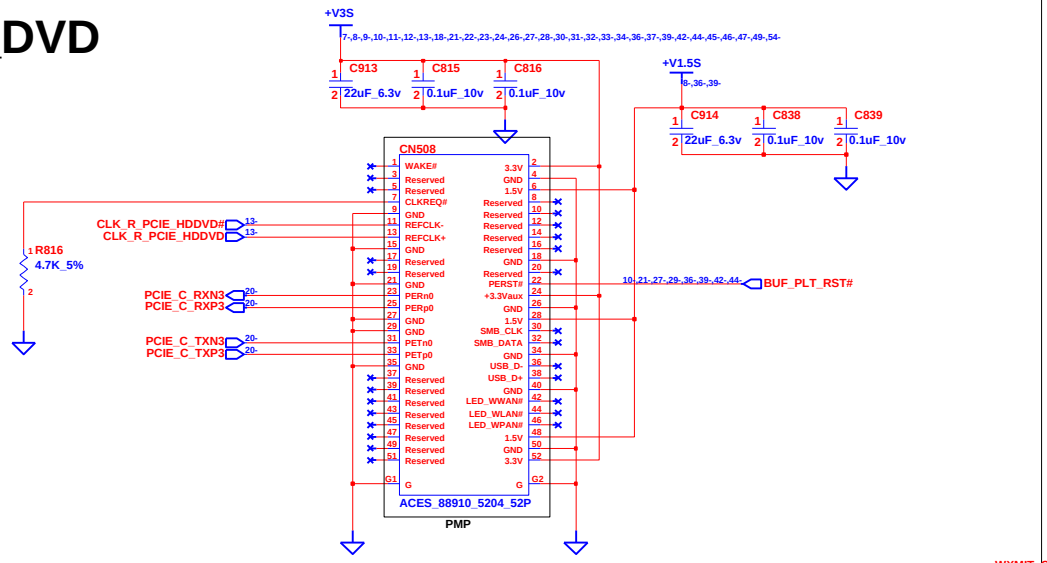

Wireless & Debug card

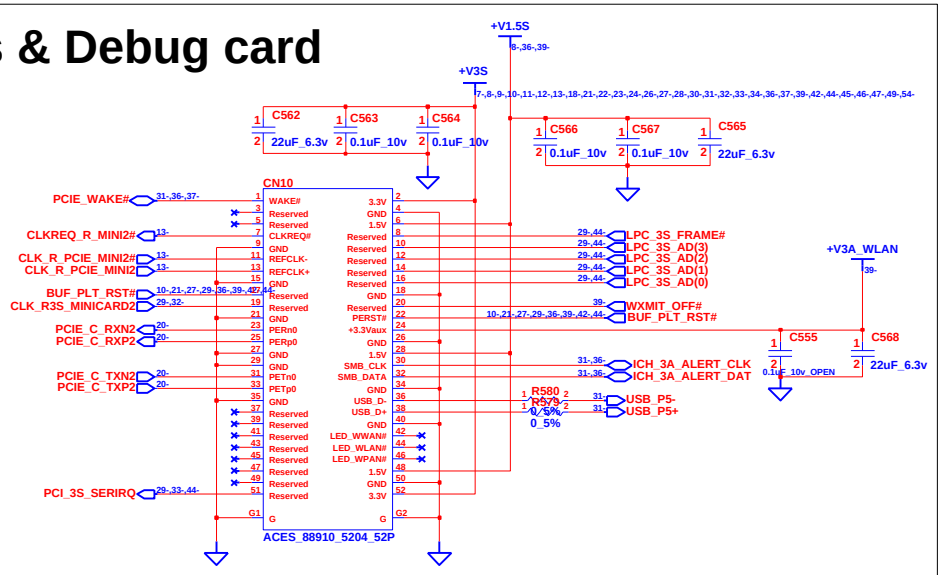

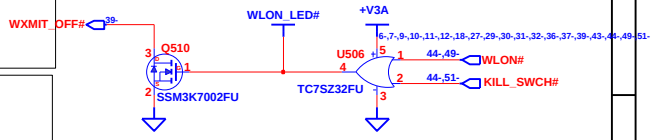

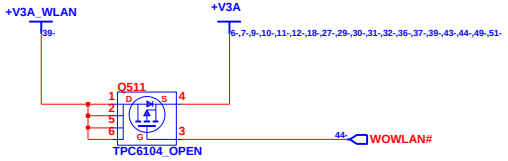

CHANGE by	TIGER	27-Nov-2007	

INVENTEC

TITLE: *Phoenix/Sacramento 10A*
Robson & WLAN

SIZE	CODE	DOC. NUMBER	REV
A3	CS	Model_No	X01

SHEET 39 OF 54

hexainf@hotmail.com
GRATIS - FREE

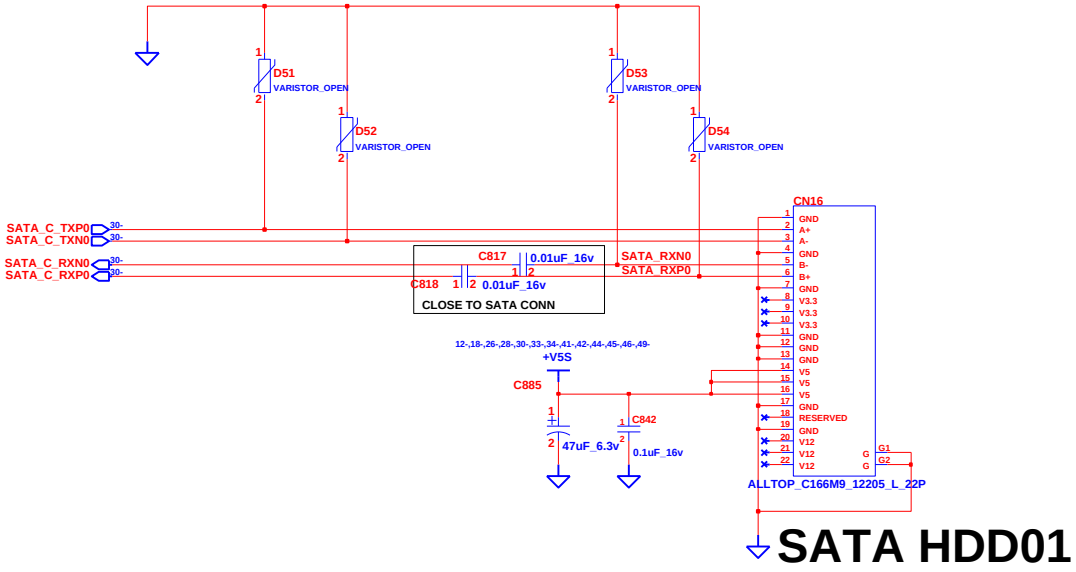

SATA HDD01

CHANGE by	TIGER	19-Dec-2007	

INVENTEC

TITLE *Phoenix/Sacramento 10A*
SATA HDD CONN

SIZE	CODE	DOC. NUMBER	REV
A3	CS	*Model_No*	*X01*

SHEET 40 OF 54

hexainf@hotmail.com
GRATIS - FREE

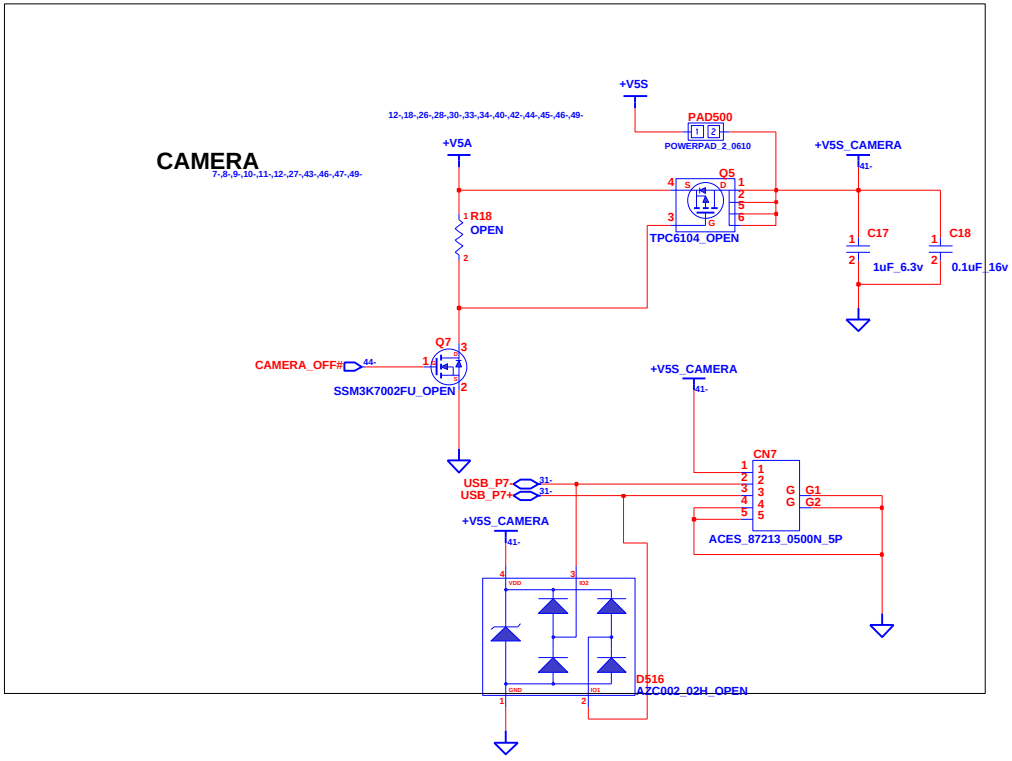

INVENTEC

TITLE **Phoenix/Sacramento 10A**
Filica & Finger Printer & Camera

SIZE	CODE	DOC. NUMBER	REV
A3	CS	Model_No	X01

CHANGE by TIGER 19-Dec-2007

SHEET 41 OF 54

hexainf@hotmail.com
GRATIS - FREE

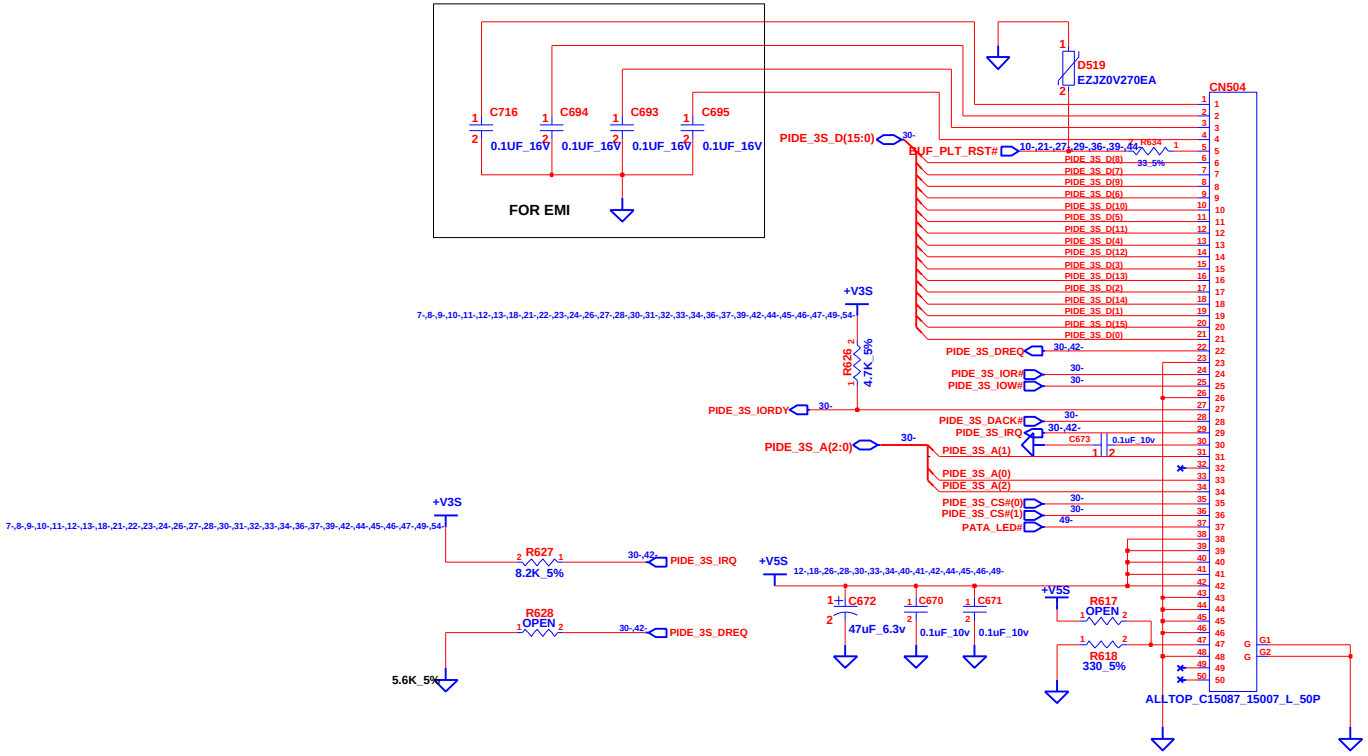

CHANGE by	TIGER	24-Aug-2007	

INVENTEC

TITLE: *Phoenix/Sacramento 10A ODD*

SIZE	CODE	DOC. NUMBER	REV
A3	CS	Model_No	X01

SHEET 42 OF 54

hexainf@hotmail.com
GRATIS - FREE

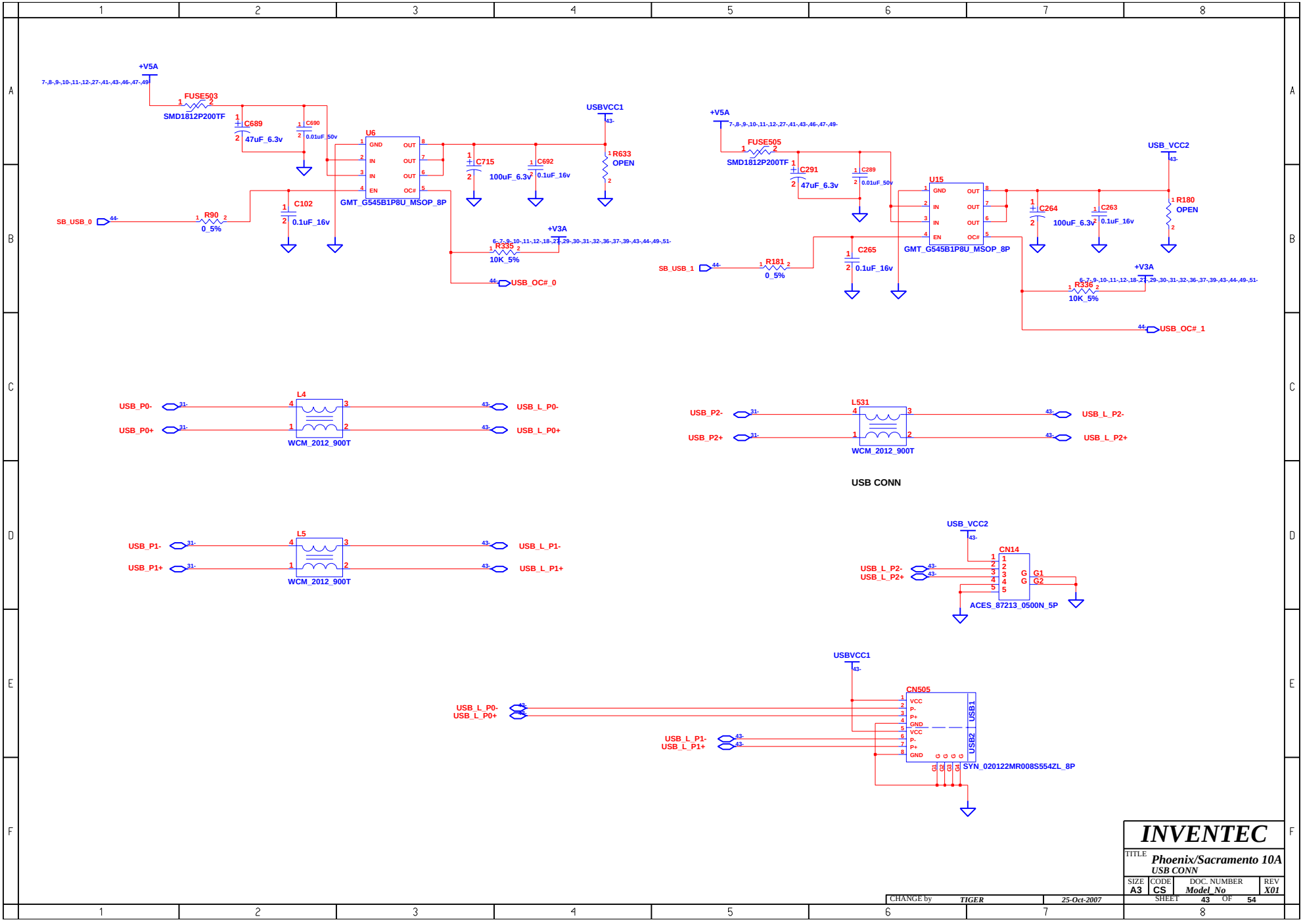

hexainf@hotmail.com
GRATIS - FREE

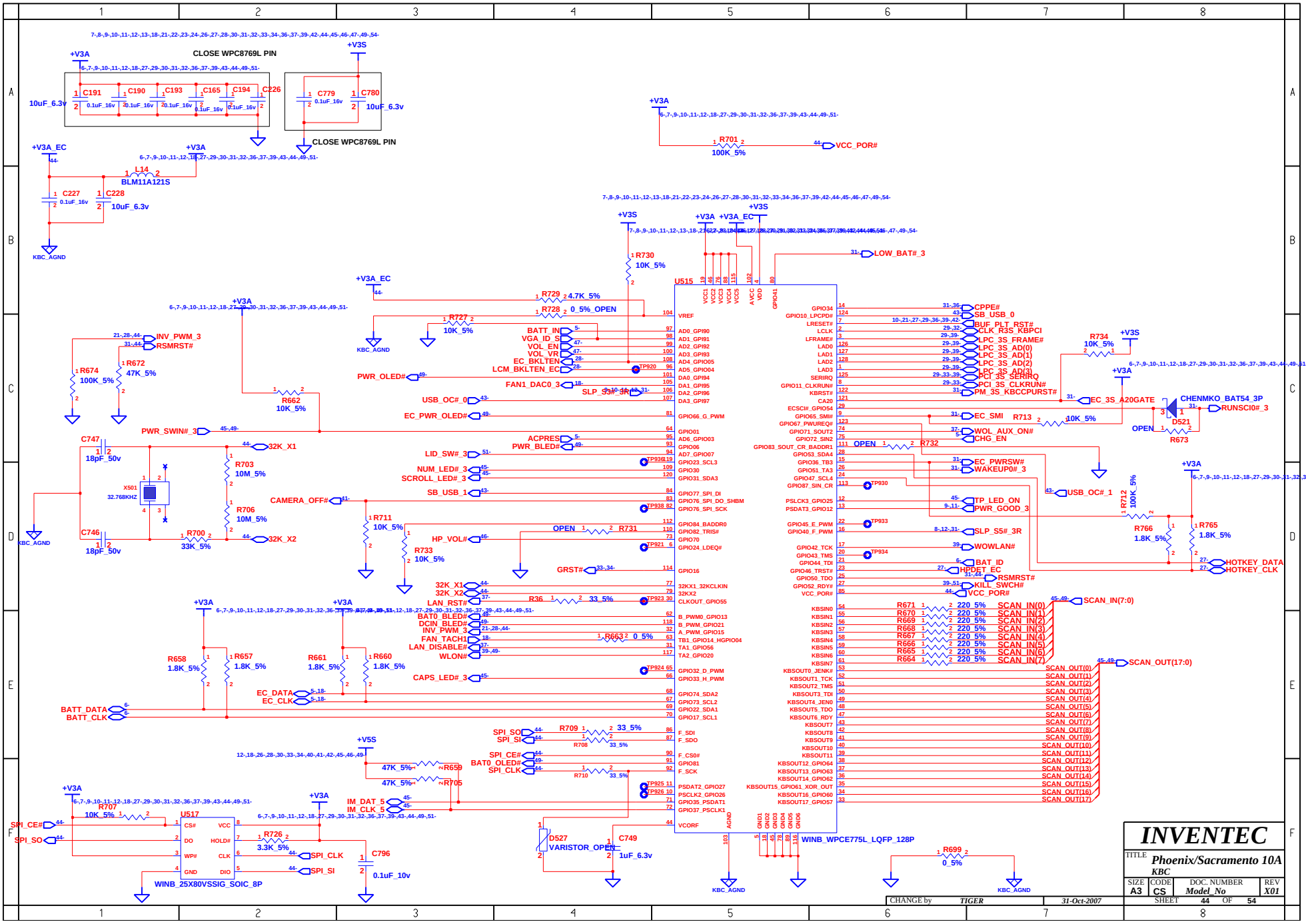

hexainf@hotmail.com
GRATIS - FREE

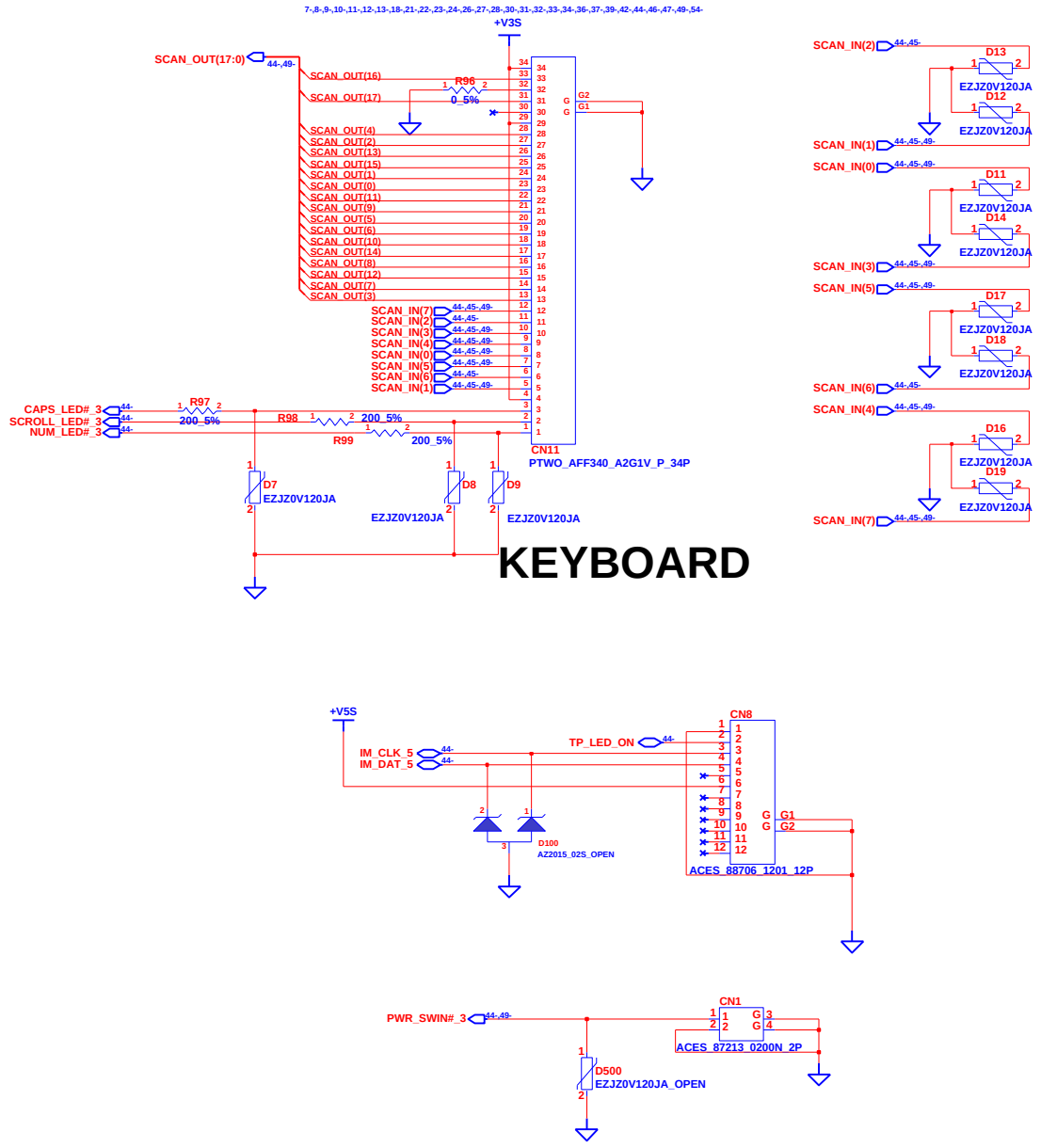

INVENTEC

TITLE Phoenix/Sacramento 10A
INT.KBC/POINT DEVICES

SIZE	CODE	DOC. NUMBER	REV
A3	CS	Model_No	X01

CHANGE by TIGER 9-Oct-2007 SHEET 45 OF 54

hexainf@hotmail.com
GRATIS - FREE

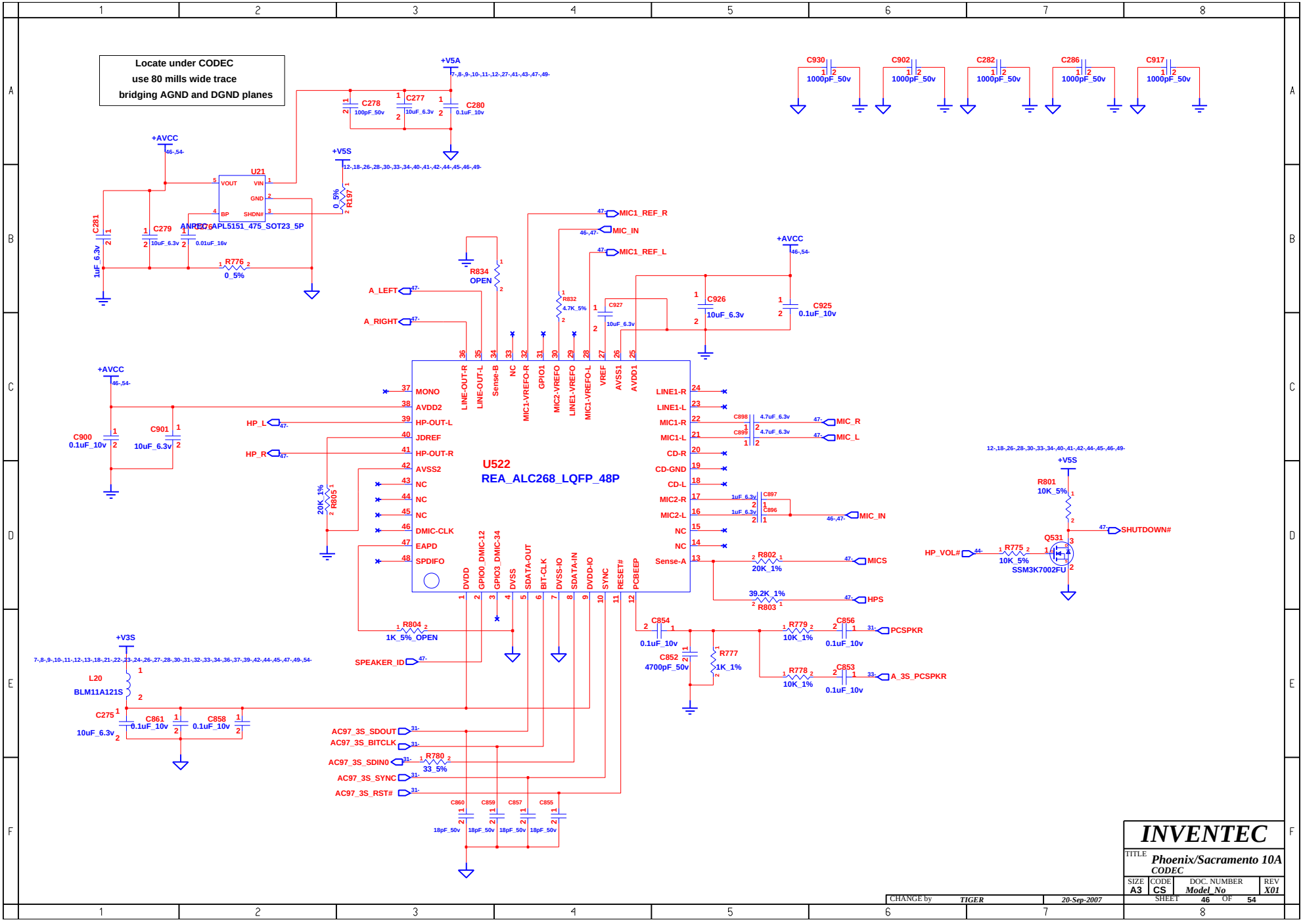

hexainf@hotmail.com
GRATIS - FREE

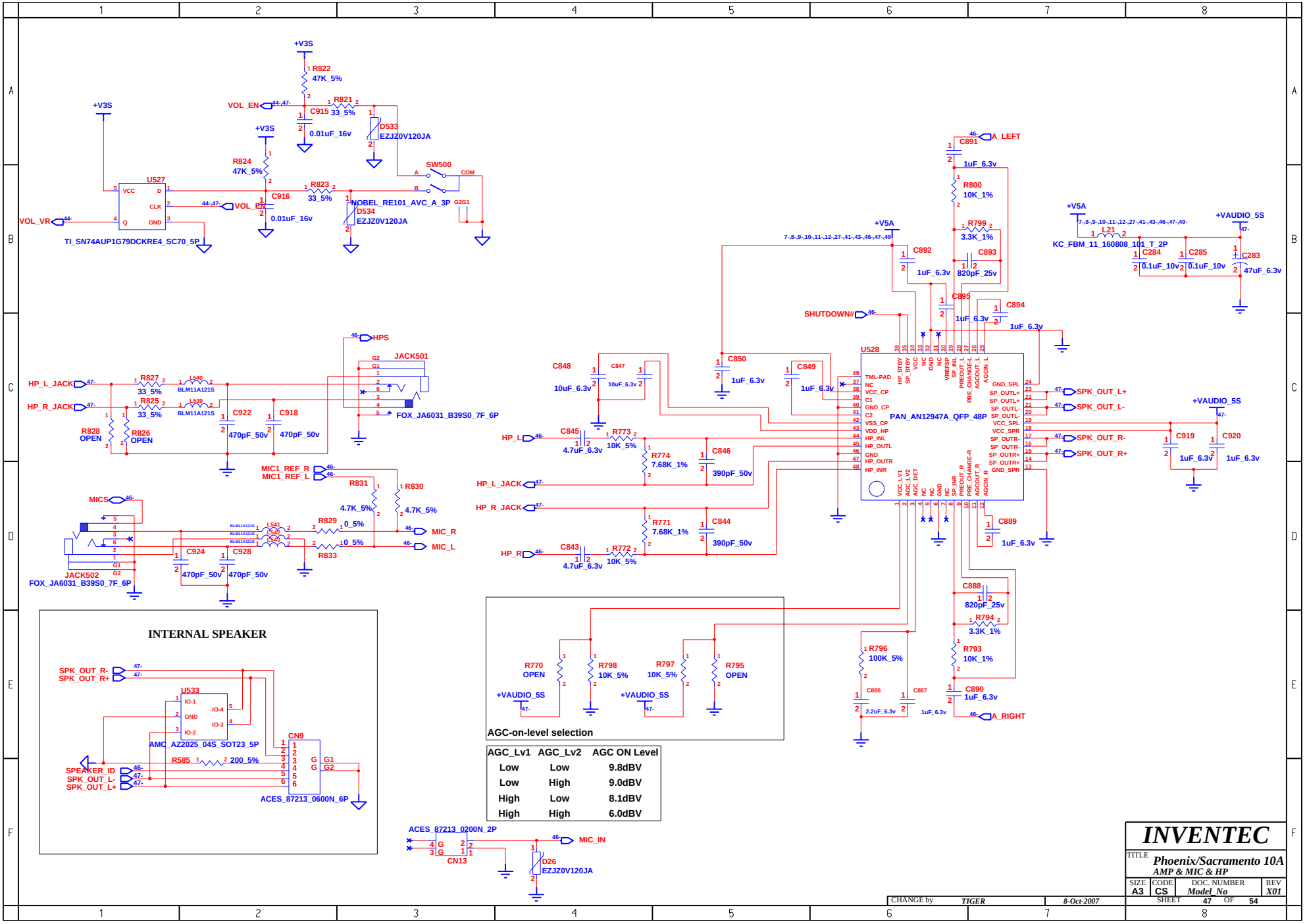

AGC_Lv1	AGC_Lv2	AGC ON Level
Low	Low	9.8dBV
Low	High	9.0dBV
High	Low	8.1dBV
High	High	6.0dBV

hexainf@hotmail.com
GRATIS - FREE

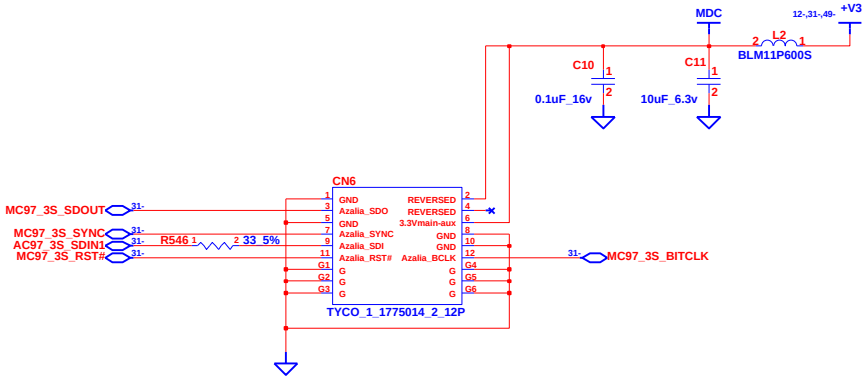

CHANGE by	TIGER	12-Sep-2007	

INVENTEC

TITLE *Phoenix/Sacramento 10A MDC1.5*

SIZE	CODE	DOC. NUMBER	REV
A3	CS	Model_No	X01

SHEET 48 OF 54

hexainf@hotmail.com
GRATIS - FREE

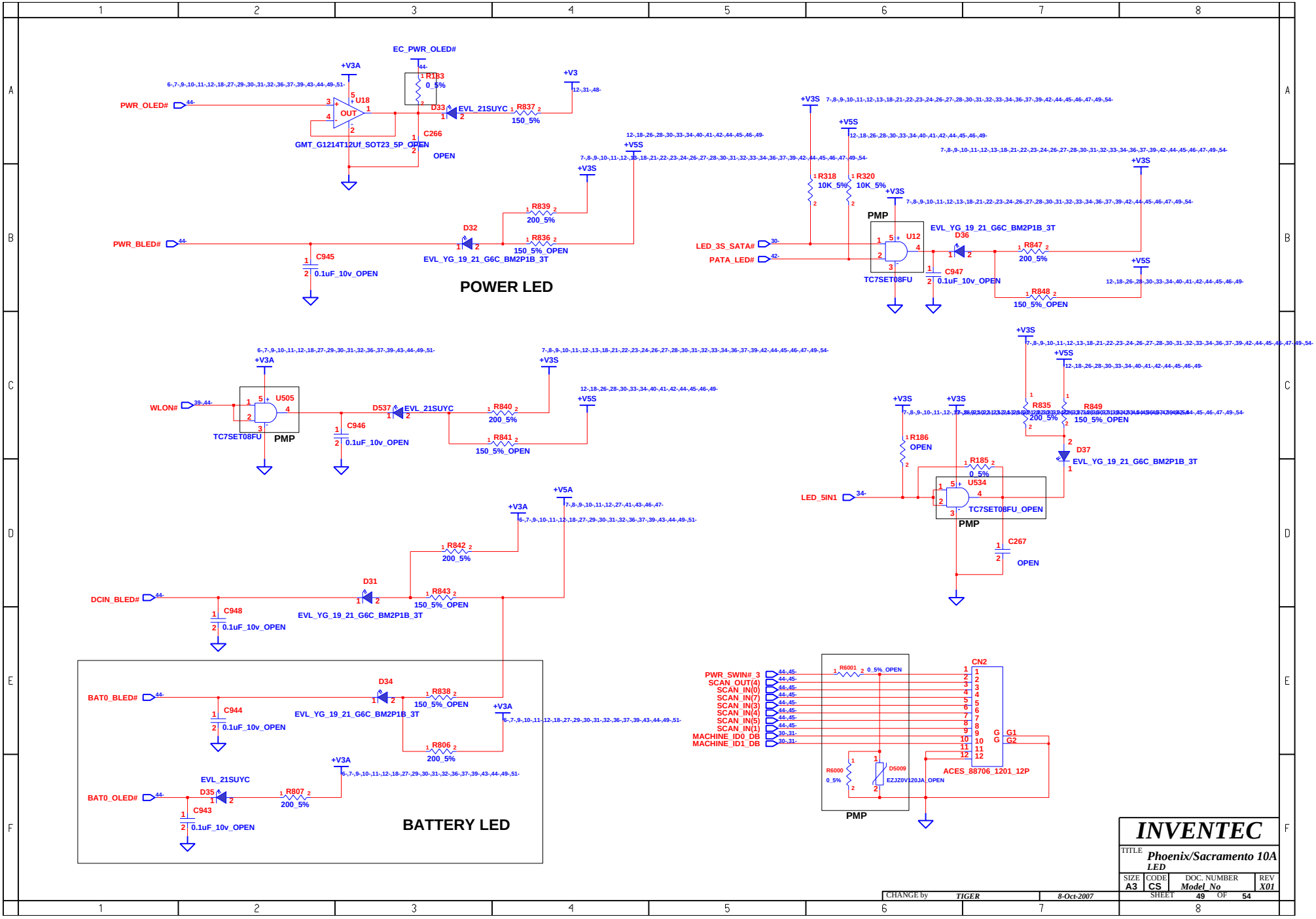

hexainf@hotmail.com
GRATIS - FREE

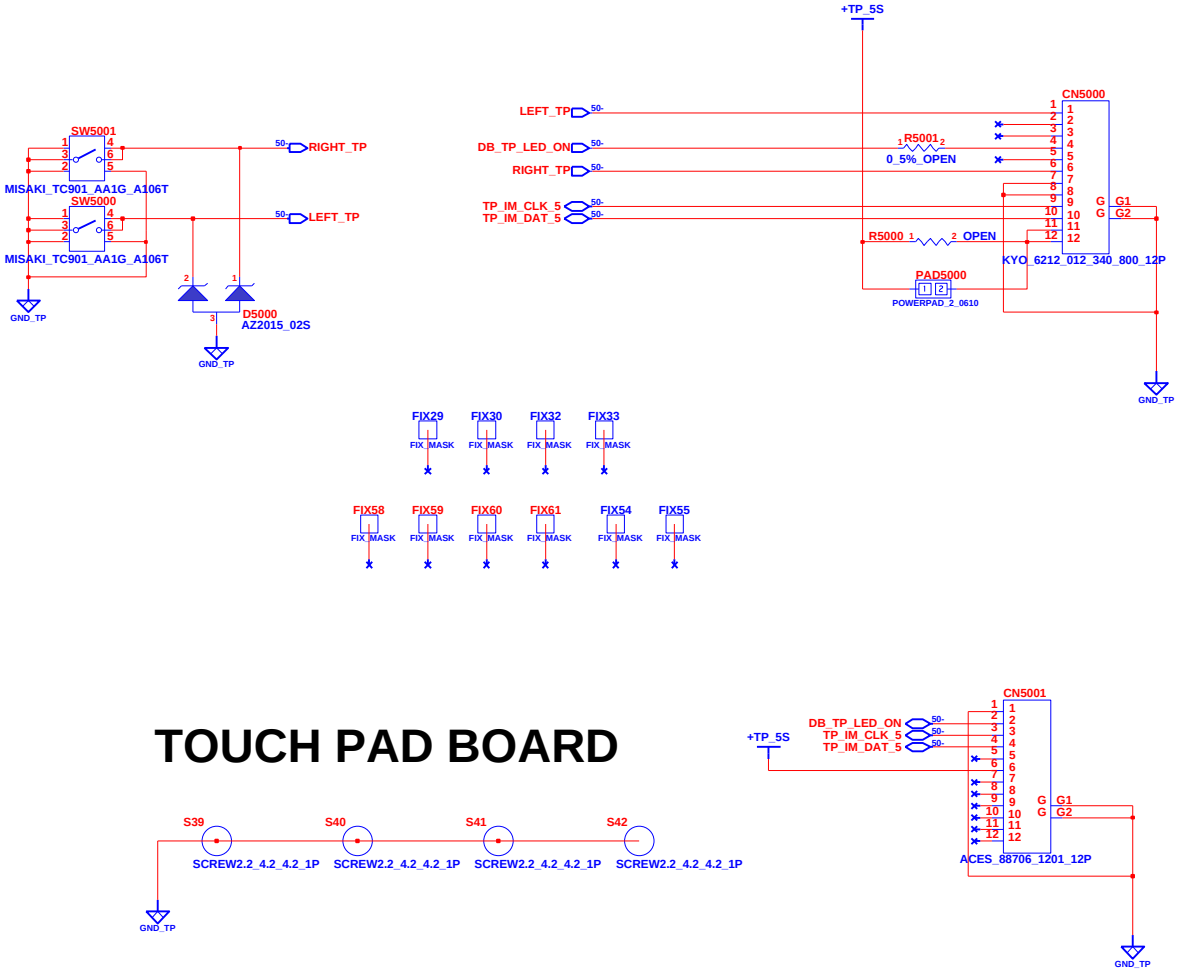

CHANGE by	TIGER	3-Jan-2008	

INVENTEC

TITLE *Phoenix/Sacramento 10A*
Touch Pad Board

SIZE	CODE	DOC. NUMBER	REV
A3	CS	*Model_No*	*X01*

SHEET 50 OF 54

hexainf@hotmail.com
GRATIS - FREE

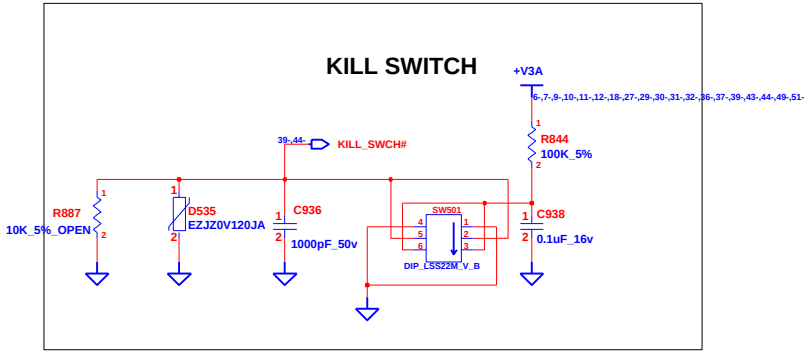

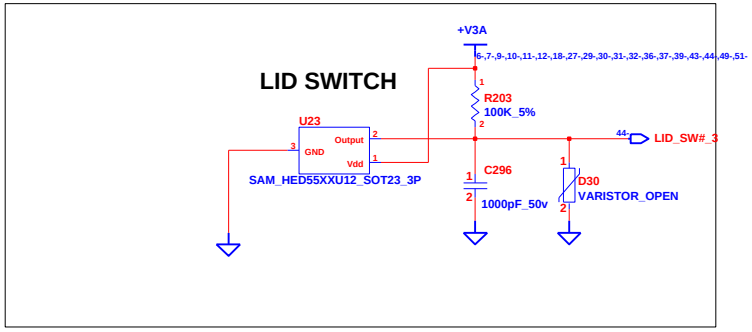

INVENTEC			
TITLE	Phoenix/Sacramento 10A Kill SW & Lid SW		
SIZE A3	CODE CS	DOC. NUMBER Model_No	REV X01
CHANGE by TIGER	24-Aug-2007	SHEET 51 OF 54	

hexainf@hotmail.com
GRATIS - FREE

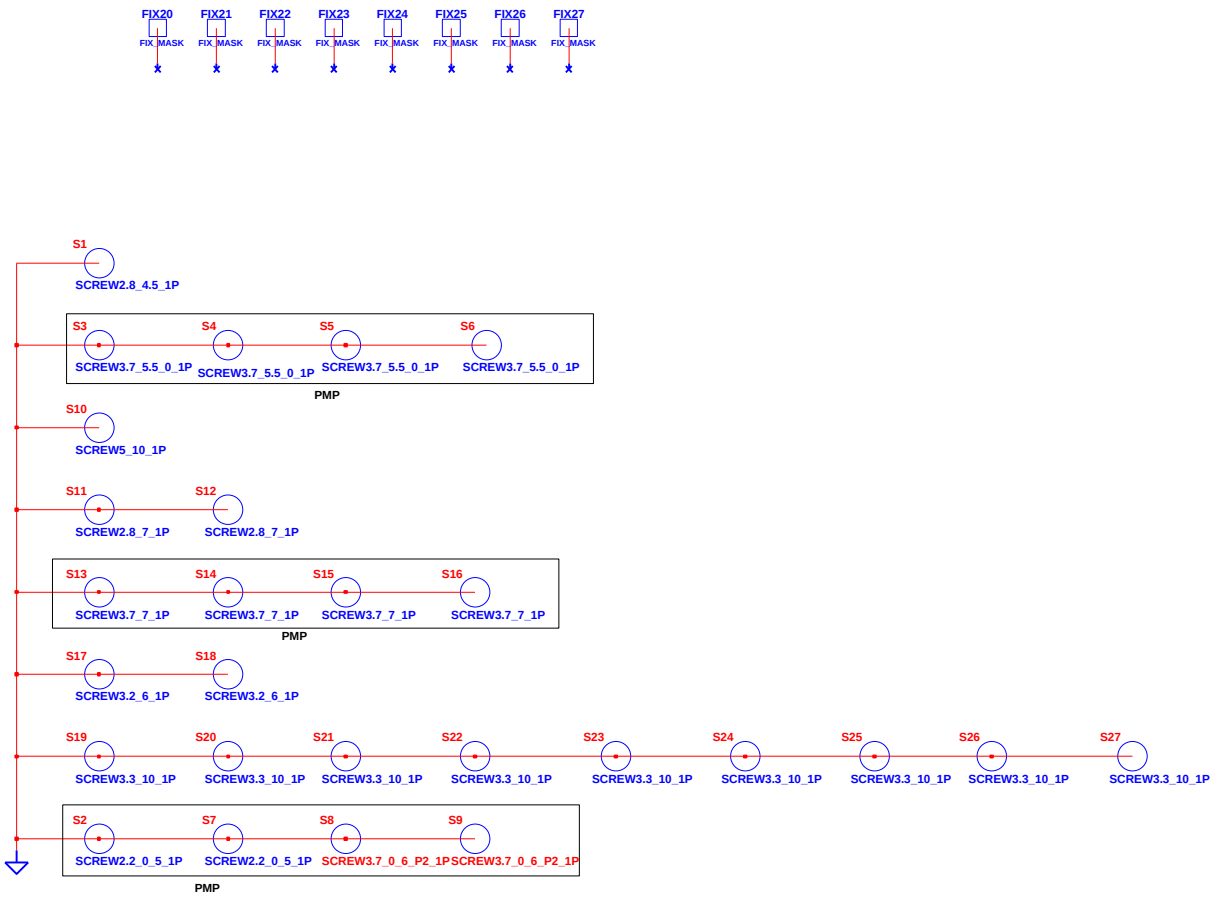

INVENTEC

TITLE *Phoenix/Sacramento 10A*
SCREW

SIZE	CODE	DOC. NUMBER	REV
A3	CS	*Model_No*	*X01*

CHANGE by *TIGER* *16-Jan-2008*

SHEET 52 OF 54

hexainf@hotmail.com
GRATIS - FREE

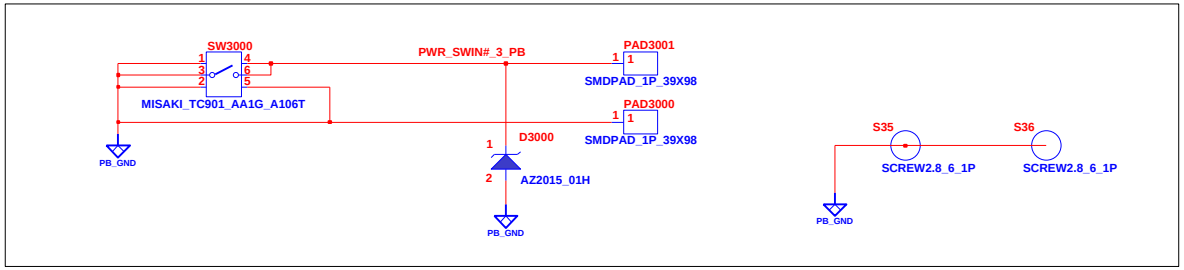

PW BOARD

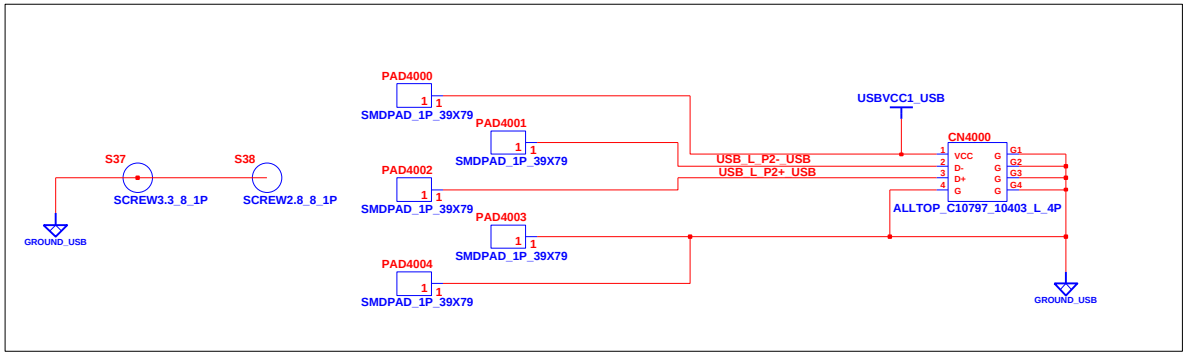

USB BOARD

CHANGE by	TIGER	19-Dec-2007	

INVENTEC

TITLE *Phoenix/Sacramento 10A*
EMI

SIZE	CODE	DOC. NUMBER	REV
A3	CS	*Model_No*	*X01*

SHEET 53 OF 54

hexainf@hotmail.com
GRATIS - FREE

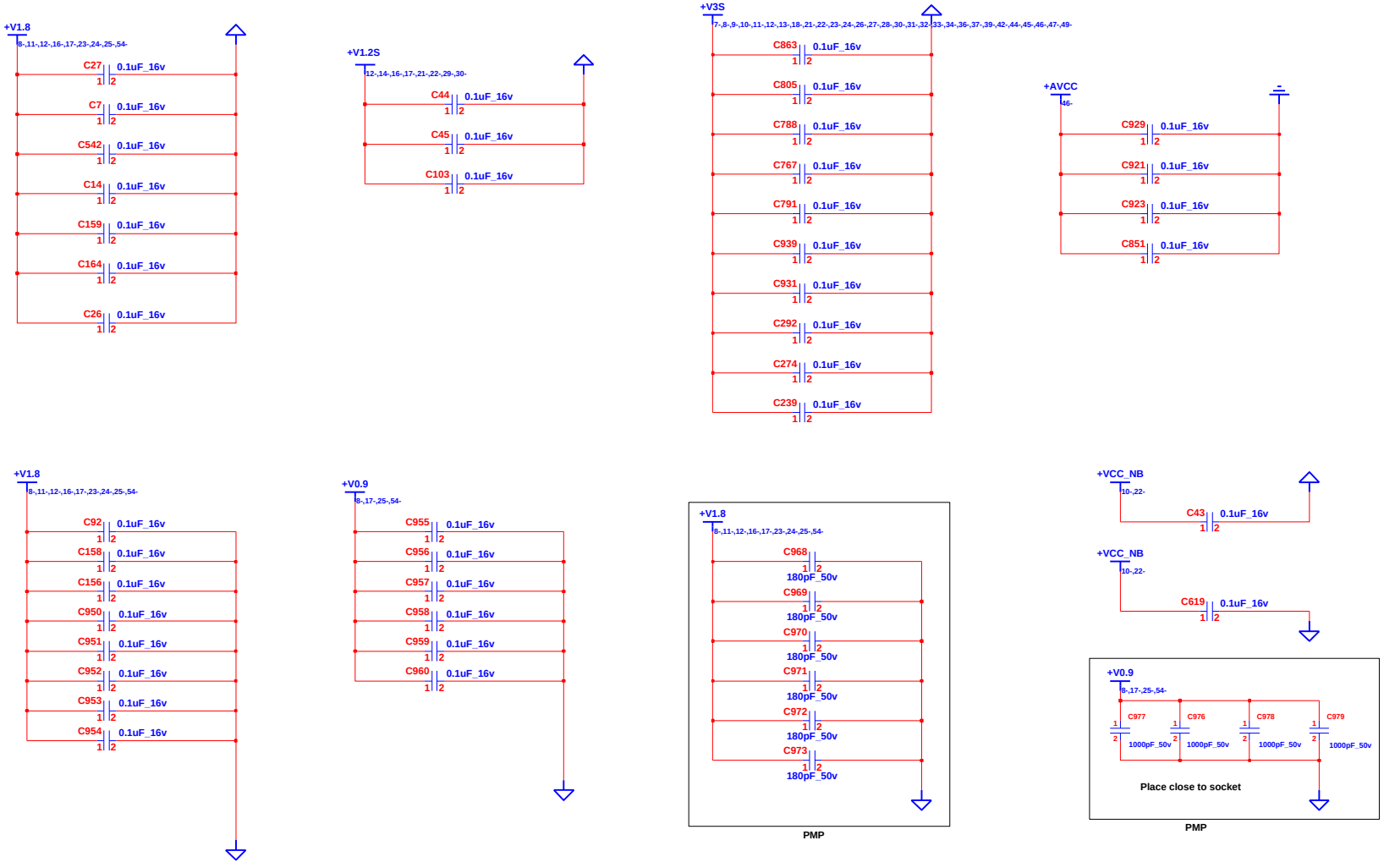

CHANGE by	TIGER	31-Oct-2007	

INVENTEC

TITLE **Phoenix/Sacramento 10A**
EMI

SIZE	CODE	DOC. NUMBER	REV
A3	CS	Model_No	X01

SHEET 54 OF 54

hexainf@hotmail.com
GRATIS - FREE