Schematics Page Index (Title / Revision / Change Date)

Page	Title of Schematics Page	Rev.	Date	Page	Title of Schematics Page	Rev.	Date
01	Schematics Page Index	1.1	2006/08/10	41	ICH7-M(GND) 5/5	1.1	2006/08/10
02	Block Diagram	1.1	2006/08/10	42	SATA HDD RAID	1.1	2006/08/10
03	CLOCK GEN	1.1	2006/08/10	43	PATA CD-ROM	1.1	2006/08/10
04	Yonah(HOST BUS) 1/2	1.1	2006/08/10	44	PCI (PCI BUS)	1.1	2006/08/10
05	Yonah(HOST BUS) 2/3	1.1	2006/08/10	45	PCI (ILINK)	1.1	2006/08/10
06	Yonah(Power/Gnd) 3/3	1.1	2006/08/10	46	PCI (MS-STD/DUO/MDC/SD)	1.1	2006/08/10
07	CALISTOGA (HOST) 1/7	1.1	2006/08/10	47	PCI (PCMCIA)	1.1	2006/08/10
08	CALISTOG (DMI) 2/7	1.1	2006/08/10	48	Bluetooth	1.1	2006/08/10
09	CALIST (GRAPHIC) 3/7	1.1	2006/08/10	49	Mini-PCIE Card	1.1	2006/08/10
10	CALISTOGA (DDRII) 4/7	1.1	2006/08/10	50	EXPRESS/CAM/OIDE	1.1	2006/08/10
11	CALIST (POWER,VCC) 5/7	1.1	2006/08/10	51	LAN (82562GT)	1.1	2006/08/10
12	CALIST (VCC CORE) 6/7	1.1	2006/08/10	52	USB2.0	1.1	2006/08/10
13	CALIST (VSS) 7/7	1.1	2006/08/10	53	USB HUB 1.1	1.1	2006/08/10
14	DDRII(SO-DIMM_0) 1/3	1.1	2006/08/10	54	CIR Reciver	1.1	2006/08/10
15	DDRII(SO-DIMM_1) 2/3	1.1	2006/08/10	55	AUDIO(CODEC & POWER)	1.1	2006/08/10
16	DDRII(Termination) 3/3	1.1	2006/08/10	56	AUDIO(AMP & HP & SPK)	1.1	2006/08/10
17	VGA(PCI-E)	1.1	2006/08/10	57	AUDIO (MUTE & INTMIC)	1.1	2006/08/10
18	VGA(STRAP)	1.1	2006/08/10	58	AUDIO (PHONE OUT)	1.1	2006/08/10
19	VGA(GDDR)	1.1	2006/08/10	59	Audio BOARD conn	1.1	2006/08/10
20	VGA(MULTIUSE)	1.1	2006/08/10	60	EC+KBC	1.1	2006/08/10
21	VGA(LVD/VDAC)	1.1	2006/08/10	61	Flash ROM/XBUS	1.1	2006/08/10
22	VRAM(GDDR)# 1/2	1.1	2006/08/10	62	FAN	1.1	2006/08/10
23	VRAM(GDDR)# 2/2	1.1	2006/08/10	63	Daughter Board Conn.	1.1	2006/08/10
24	VGA(POWER) 1/3	1.1	2006/08/10	64	DOCKING CONN.	1.1	2006/08/10
25	VGA(POWER) 2/3	1.1	2006/08/10	65	Power Design Diagram	1.1	2006/08/10
26	VGA(POWER) 3/3	1.1	2006/08/10	66	DCIN&Charger	1.1	2006/08/10
27	VRAM(BYPASS) 1/2	1.1	2006/08/10	67	SYS Power (+3_3V/+5V)	1.1	2006/08/10
28	VRAM(BYPASS) 2/2	1.1	2006/08/10	68	SYS Power(+1_5V/+1_05V)	1.1	2006/08/10
29	TVIN and OUT/Semi-PnP#	1.1	2006/08/10	69	DDR2 Power(+1_8V/+0_9V)	1.1	2006/08/10
30	CRT	1.1	2006/08/10	70	CPU_Vcore ---MAX8771	1.1	2006/08/10
31	LVDS	1.1	2006/08/10	71	Others power plan	1.1	2006/08/10
32	MINI PCI (TV)	1.1	2006/08/10	72	OVP protection	1.1	2006/08/10
33	Hot plug behavior & I2C ARRANGEMENT block diagram	1.1	2006/08/10	73	VGA POWER(+1_1V/ +1_2V)	1.1	2006/08/10
34	HDMI Silicon 1930	1.1	2006/08/10	74	Logo LED Circuit	1.1	2006/08/10
35	HDMI Microcontroller	1.1	2006/08/10	75	HOLE & BOSS	1.1	2006/08/10
36	HDMI UCODEC	1.1	2006/08/10	76	HISTORY(DVT)	1.1	2006/08/10
37	ICH7-M(PCI/USB) 1/5	1.1	2006/08/10	77	Power On Sequerce Block Diagram	1.1	2006/08/10
38	ICH7-M(LPC,IDE,SATA)2/5	1.1	2006/08/10	78	Power On Sequerce Timing	1.1	2006/08/10
39	ICH7-M(GPIO) 3/5	1.1	2006/08/10	79		1.1	2006/08/10
40	ICH7-M(POWER) 4/5	1.1	2006/08/10	80		1.1	2006/08/10

P. Leader	Check by	Design by

Project Code & Schematics Subject: MS21 MP Main Board (TYPE 2)

PCB P/N: 1P-0068100-8011 (FUBAI)
1P-0068500-8011 (Hannstar)

FOXCONN HON HAI Precision Ind. Co., Ltd. CCPBG - R&D Division

Title: Index Page

Size: A3 | Document Number: (MS21-1-01)MainBoard (MBX-164) TYPE2 | Rev: 1.1

Date: Thursday, August 10, 2006 | Sheet 1 of 78

MS21(CALISTOGA PM+Gfx Block Diagram)

Red texts:
New modified

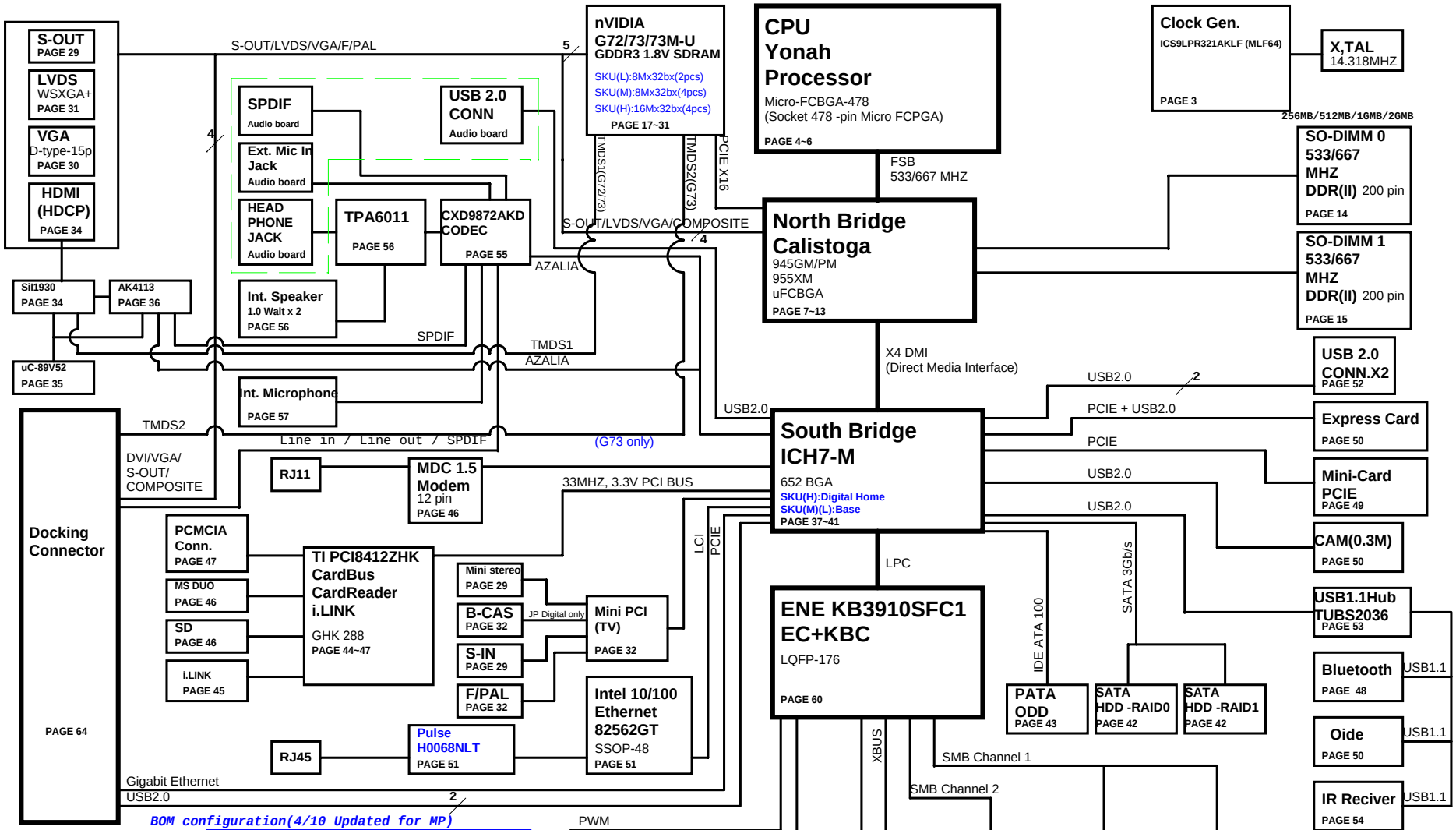

BOM configuration(4/10 Updated for MP)

Remove CA_ configuration

	Symbol ahead of value for NC components
BOTH	NC_
945GM	NV_
945PM + G72M	NV73_
945PM + G73M	NV72_
945PM + G72M or G73M-U	NV73Only_

945PM + G7XM + Infineon or Samsung VRAM	NVH_
945PM + G7XM + Hynix or Samsung VRAM	NVI_
945PM + G7XM + Hynix VRAM	NVIS_
945PM + G7XM + Infineon VRAM	NVHS_
945PM + G72M or G73M	NV16M_, NV73U_
945PM + G73M-U	NV8M_, NV7273_
*JP Digital TV Tuner SKU & No Tuner SKU not stick	JDTVNC_

FOXCONN
HON HAI Precision Ind. Co., Ltd.
CCPBG - R&D Division

Title: Block Diagram		
Size: C	Document Number: (MS21-1-01)MainBoard (MBX-164) TYPE2	Rev: 1.1
Date: Thursday, August 10, 2006	Sheet 2 of 78	

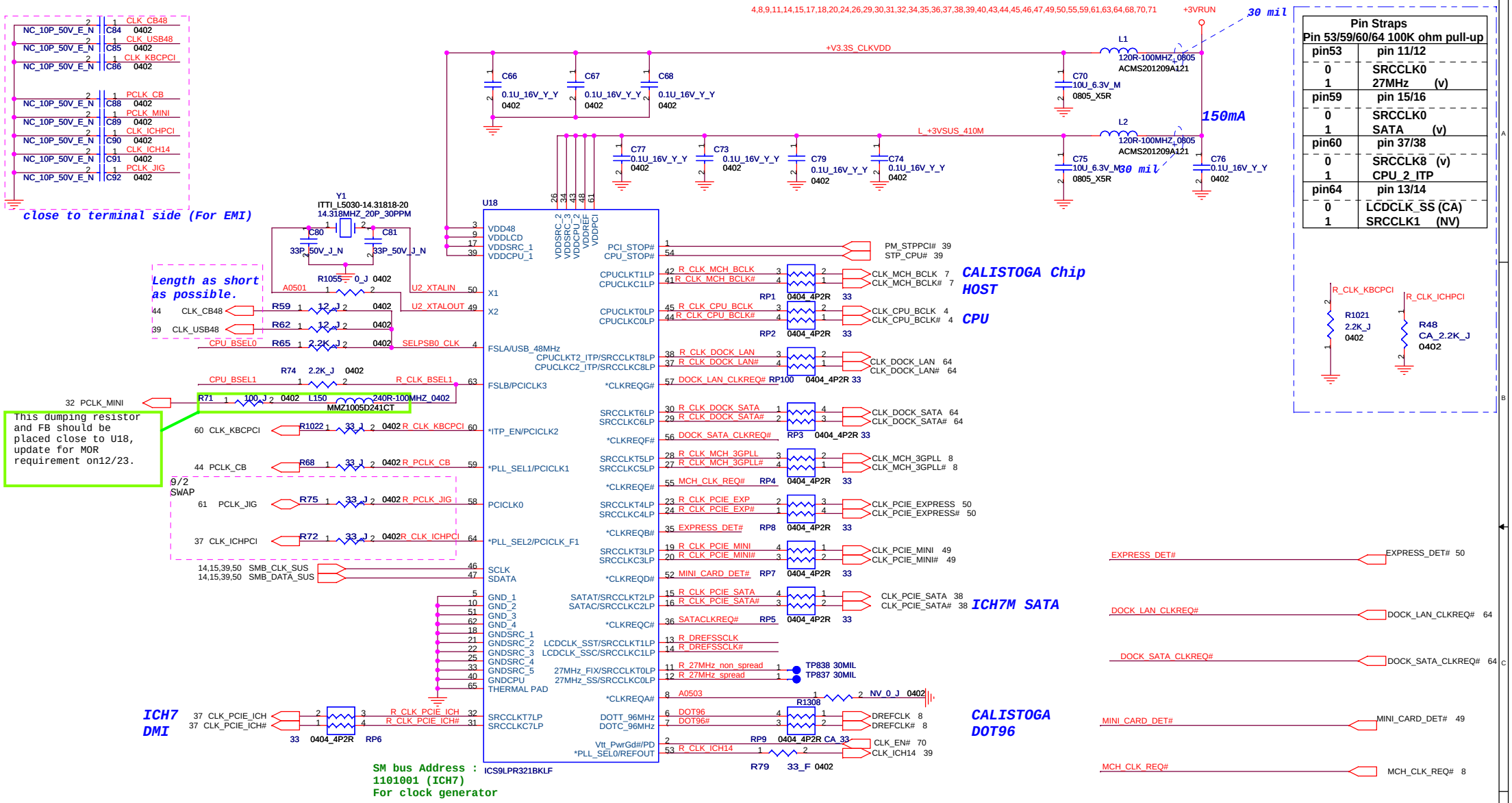

Pin Straps Pin 53/59/60/64 100K ohm pull-up	
pin53	pin 11/12
0	SRCCLK0
1	27MHz (v)
pin59	pin 15/16
0	SRCCLK0
1	SATA (v)
pin60	pin 37/38
0	SRCCLK8 (v)
1	CPU_2_ITP
pin64	pin 13/14
0	LCDCLK_SS (CA)
1	SRCCLK1 (NV)

FSB Frequency Table:

FSLB	FSLA	CPU	SRC[7:0]	PCI
0	0	100	100	33
0	1	133	100	33
1	0	200	100	33
1	1	166	100	33

FOXCONN
HON HAI Precision Ind. Co., Ltd.
CCPBG - R&D Division

Title	CLOCK GEN	
Size A3	Document Number (MS21-1-01)MainBoard (MBX-164) TYPE2	Rev 1.1
Date: Thursday, August 10, 2006	Sheet 3 of 78	

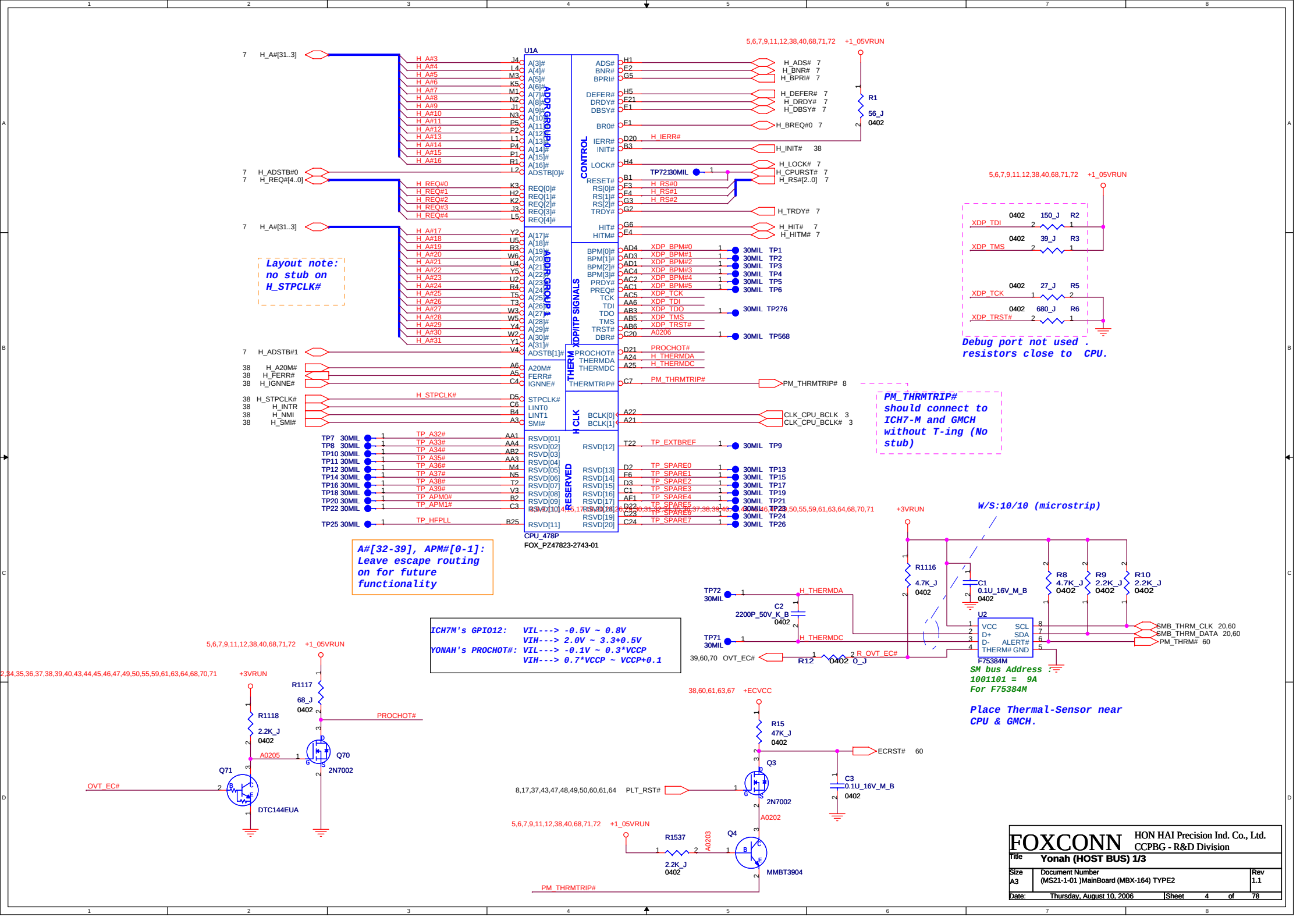
U1A
ADDR GROUP 0
ADDR GROUP 1
CONTROL
XDP/ITP SIGNALS
THERM
HCLK
RESERVED
CPU_478P
FOX_PZ47823-2743-01
Layout note: no stub on H_STPCLK#
Debug port not used . resistors close to CPU.
PM_THRMTRIP# should connect to ICH7-M and GMCH without T-ing (No stub)
A#[32-39], APM#[0-1]: Leave escape routing on for future functionality
ICH7M's GPIO12: VIL---> -0.5V ~ 0.8V
VIH---> 2.0V ~ 3.3+0.5V
YONAH's PROCHOT#: VIL---> -0.1V ~ 0.3*VCCP
VIH---> 0.7*VCCP ~ VCCP+0.1
W/S:10/10 (microstrip)
F75384M
SM bus Address : 1001101 = 9A For F75384M
Place Thermal-Sensor near CPU & GMCH.
DTC144EUA
2N7002
MMBT3904
FOXCONN
HON HAI Precision Ind. Co., Ltd.
CCPBG - R&D Division
Title Yonah (HOST BUS) 1/3
Size A3
Document Number (MS21-1-01)MainBoard (MBX-164) TYPE2
Rev 1.1
Date: Thursday, August 10, 2006
Sheet 4 of 78

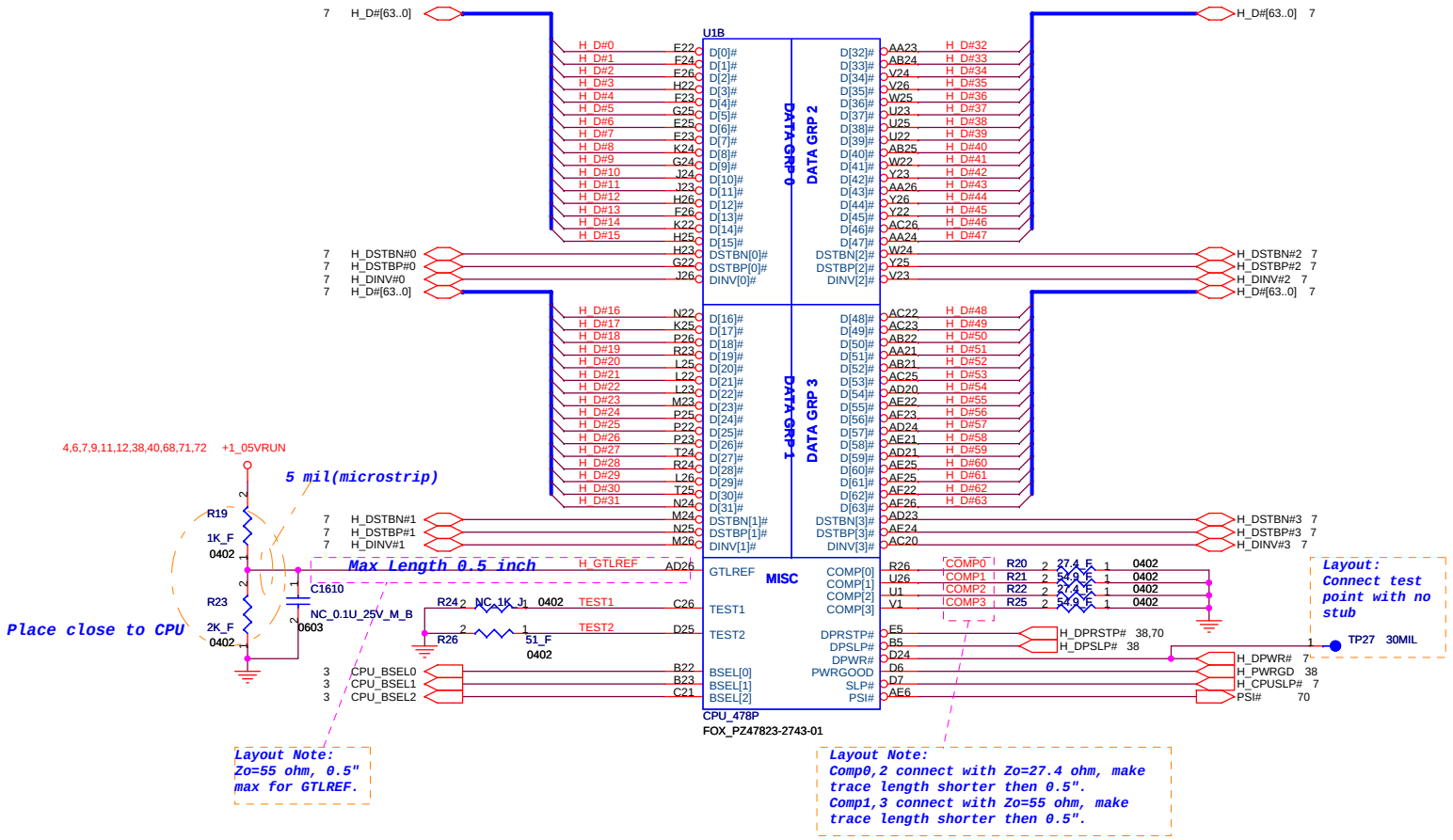

FOXCONN HON HAI Precision Ind. Co., Ltd. CCPBG - R&D Division

Title	Yonah (HOST BUS) 2/3		
Size A3	Document Number (MS21-1-01)MainBoard (MBX-164) TYPE2		Rev 1.1
Date: Thursday, August 10, 2006	Sheet 5 of 78		

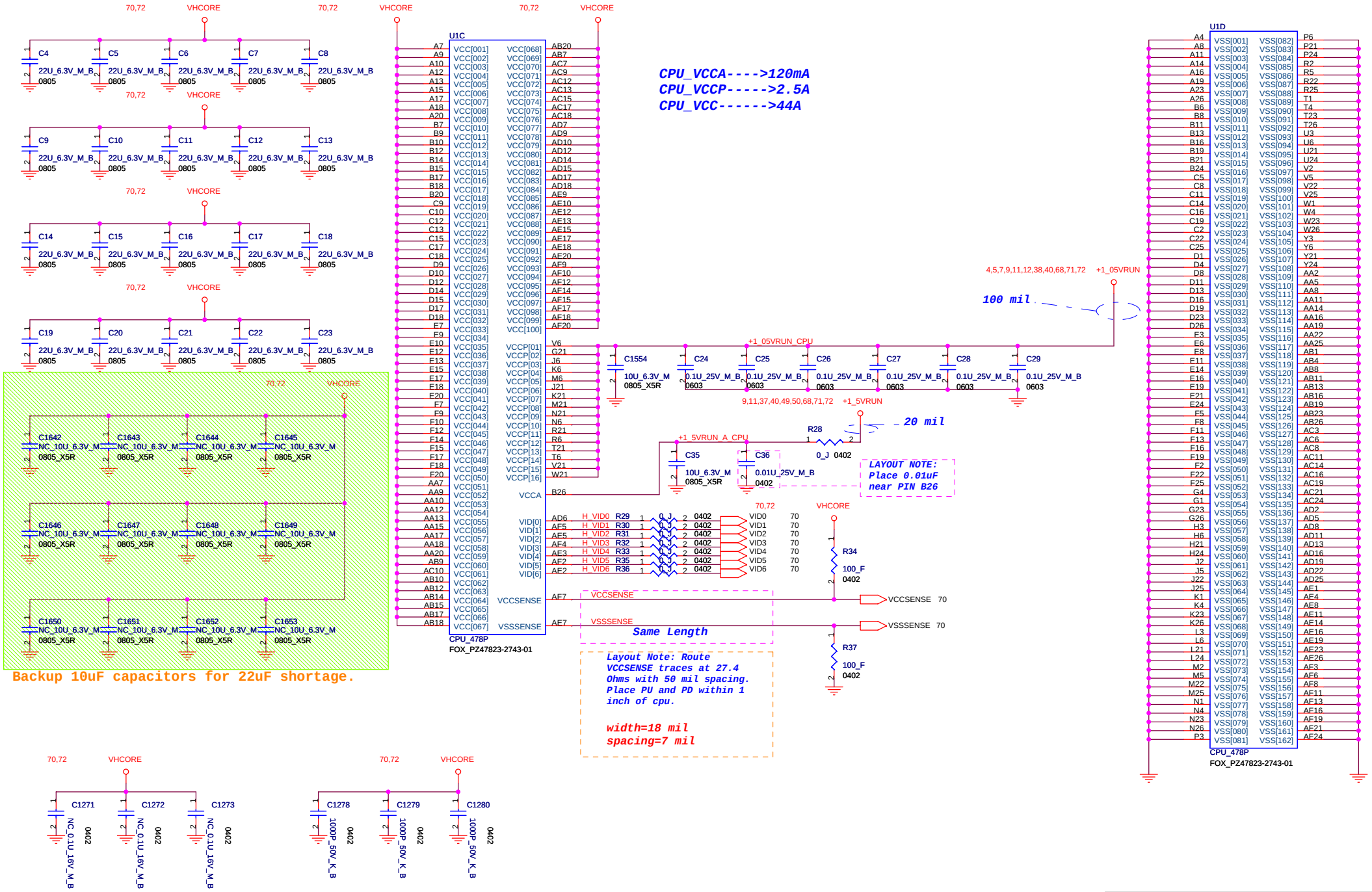

FOXCONN	HON HAI Precision Ind. Co., Ltd. CCPBG - R&D Division		
Title	Yonah (POWER/GROUND) 3/3		
Size A3	Document Number (MS21-1-01)MainBoard (MBX-164) TYPE2		Rev 1.1
Date: Thursday, August 10, 2006	Sheet 6 of 78		

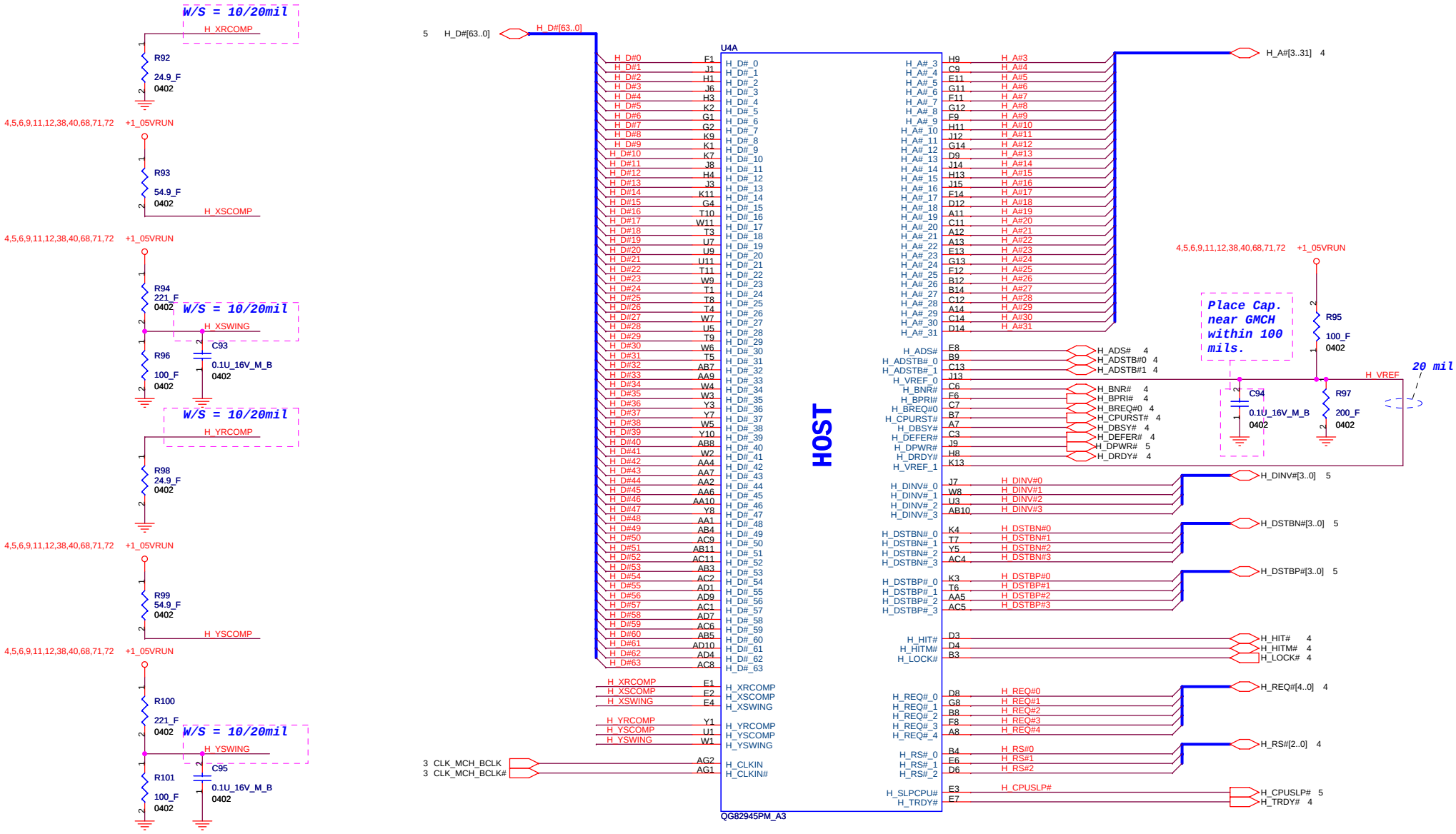

FOXCONN	HON HAI Precision Ind. Co., Ltd. CCPBG - R&D Division		
Title	CALISTOGA (HOST) 1 of 7		
Size A3	Document Number (MS21-1-01)MainBoard (MBX-164) TYPE2		Rev 1.1
Date: Thursday, August 10, 2006	Sheet 7 of 78		

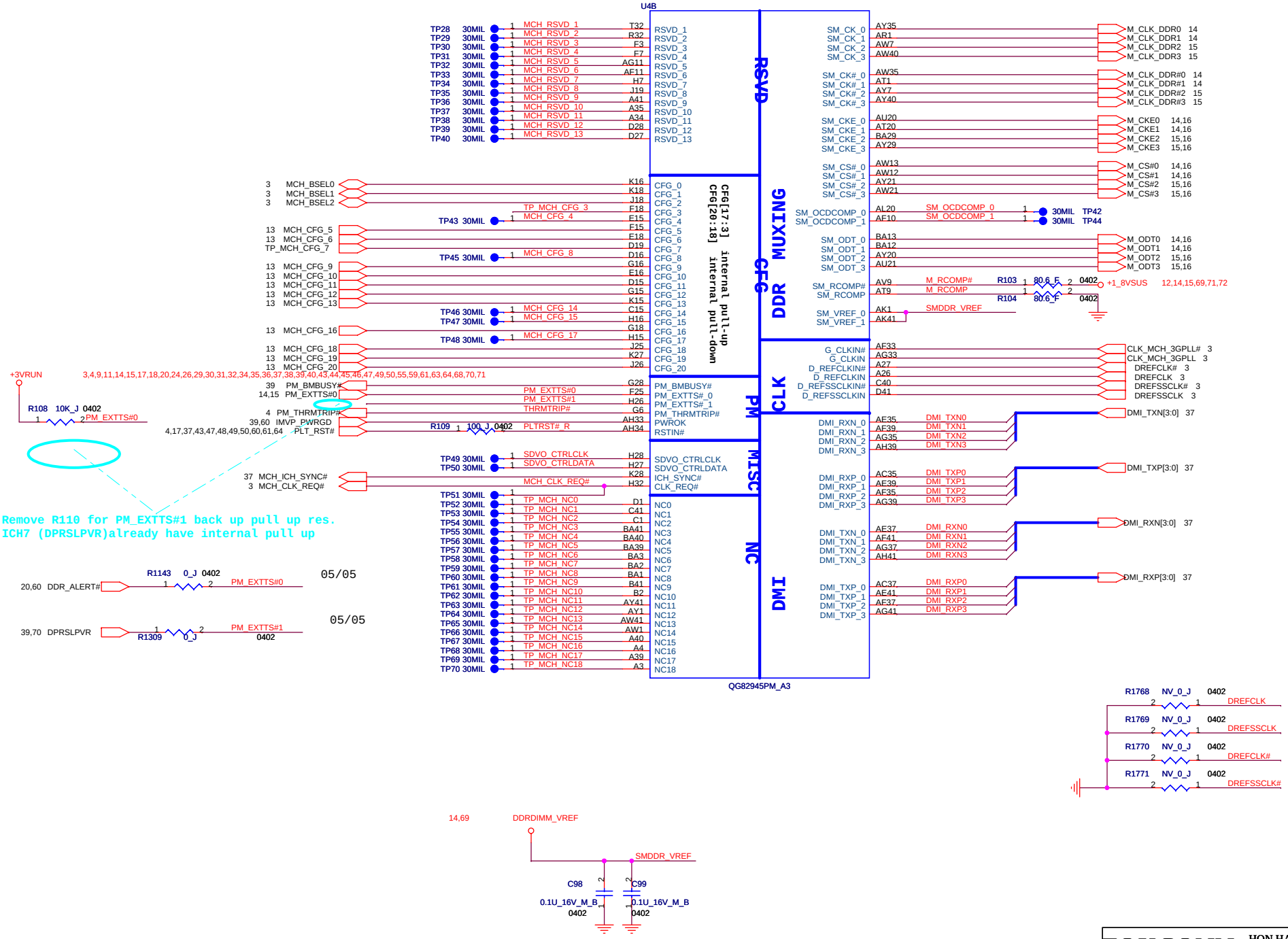
U4B
RSVD
CFG
DDR MUXING
CLK
PM
MISC
NC
DMI
CFG[17:3] internal pull-up
CFG[20:18] internal pull-down
QG82945PM_A3
5/5 Remove R110 for PM_EXTTS#1 back up pull up res.
ICH7 (DPRSLPVR)already have internal pull up
05/05
05/05
DDRDIMM_VREF
SMDDR_VREF
C98 0.1U_16V_M_B 0402
C99 0.1U_16V_M_B 0402
R1768 NV_0_J 0402 DREFCLK
R1769 NV_0_J 0402 DREFSSCLK
R1770 NV_0_J 0402 DREFCLK#
R1771 NV_0_J 0402 DREFSSCLK#
FOXCONN
HON HAI Precision Ind. Co., Ltd.
CCPBG - R&D Division
Title CALISTOGA (DMI) 2 of 7
Size A3
Document Number (MS21-1-01)MainBoard (MBX-164) TYPE2
Rev 1.1
Date: Thursday, August 10, 2006
Sheet 8 of 78

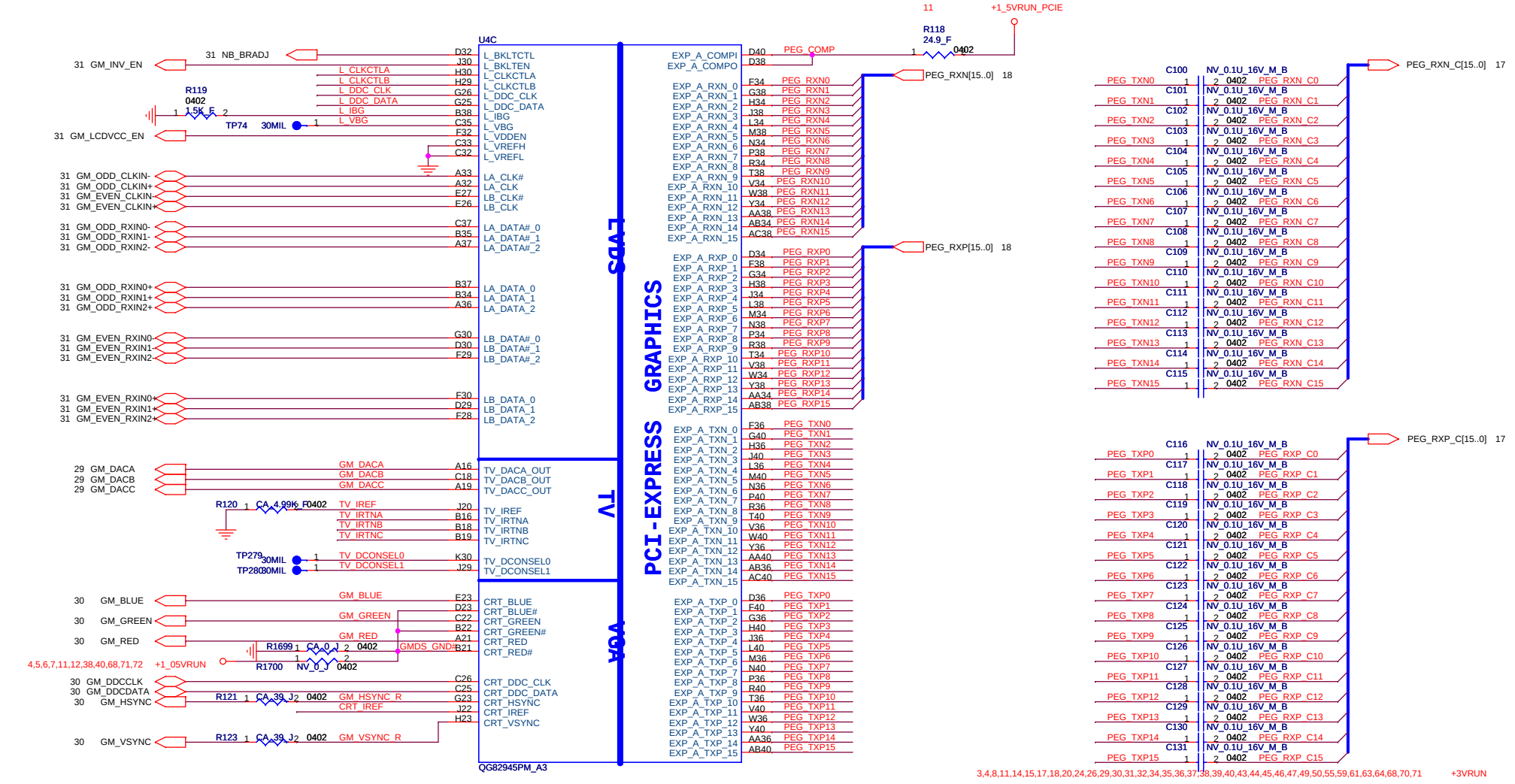

FOXCONN HON HAI Precision Ind. Co., Ltd. CCPBG - R&D Division

Title	CALISTOGA (DMI) 3 of 7	
Size A3	Document Number (MS21-1-01)MainBoard (MBX-164) TYPE2	Rev 1.1
Date: Thursday, August 10, 2006	Sheet 9 of 78	

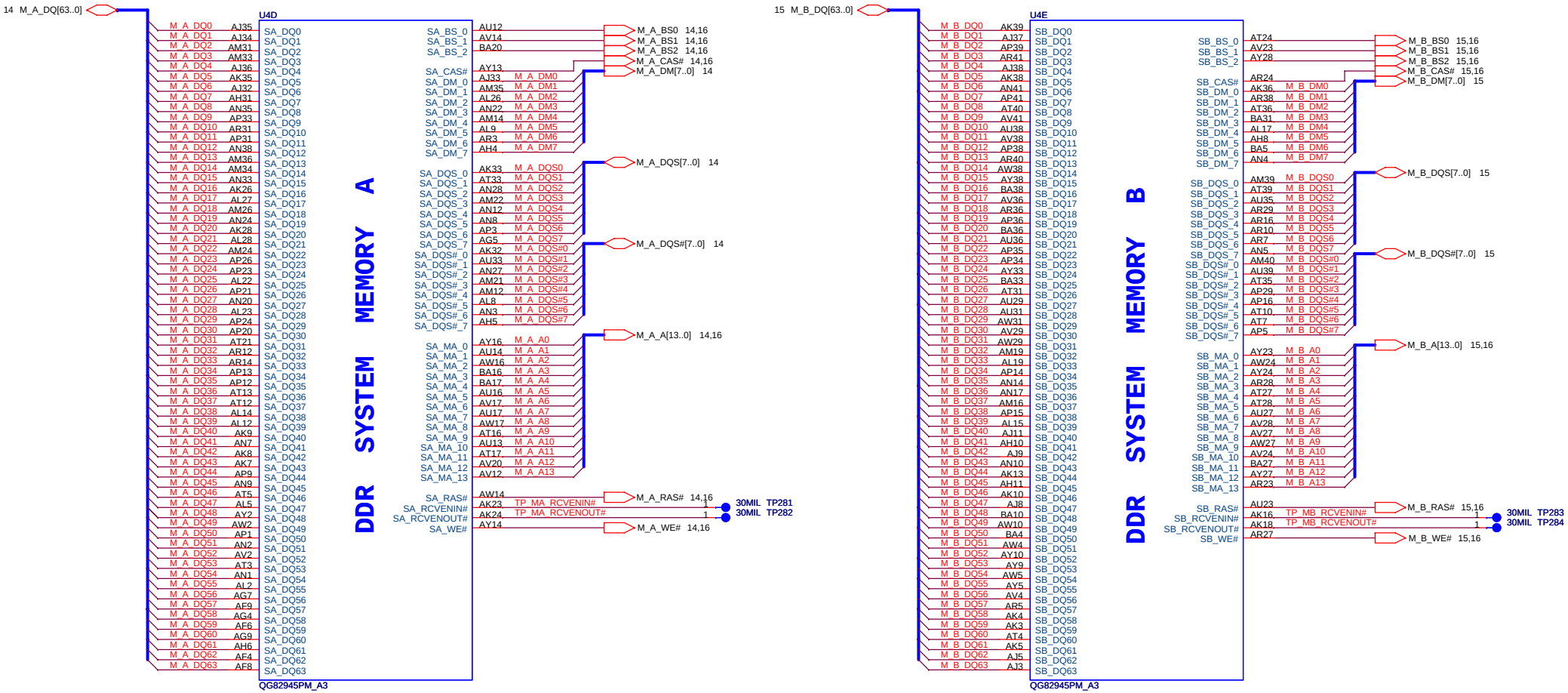

FOXCONN	HON HAI Precision Ind. Co., Ltd. CCPBG - R&D Division	
Title	CALISTOGA (DDRII) 4 of 7	
Size A3	Document Number (MS21-1-01)MainBoard (MBX-164) TYPE2	Rev 1.1
Date: Thursday, August 10, 2006	Sheet 10 of 78	

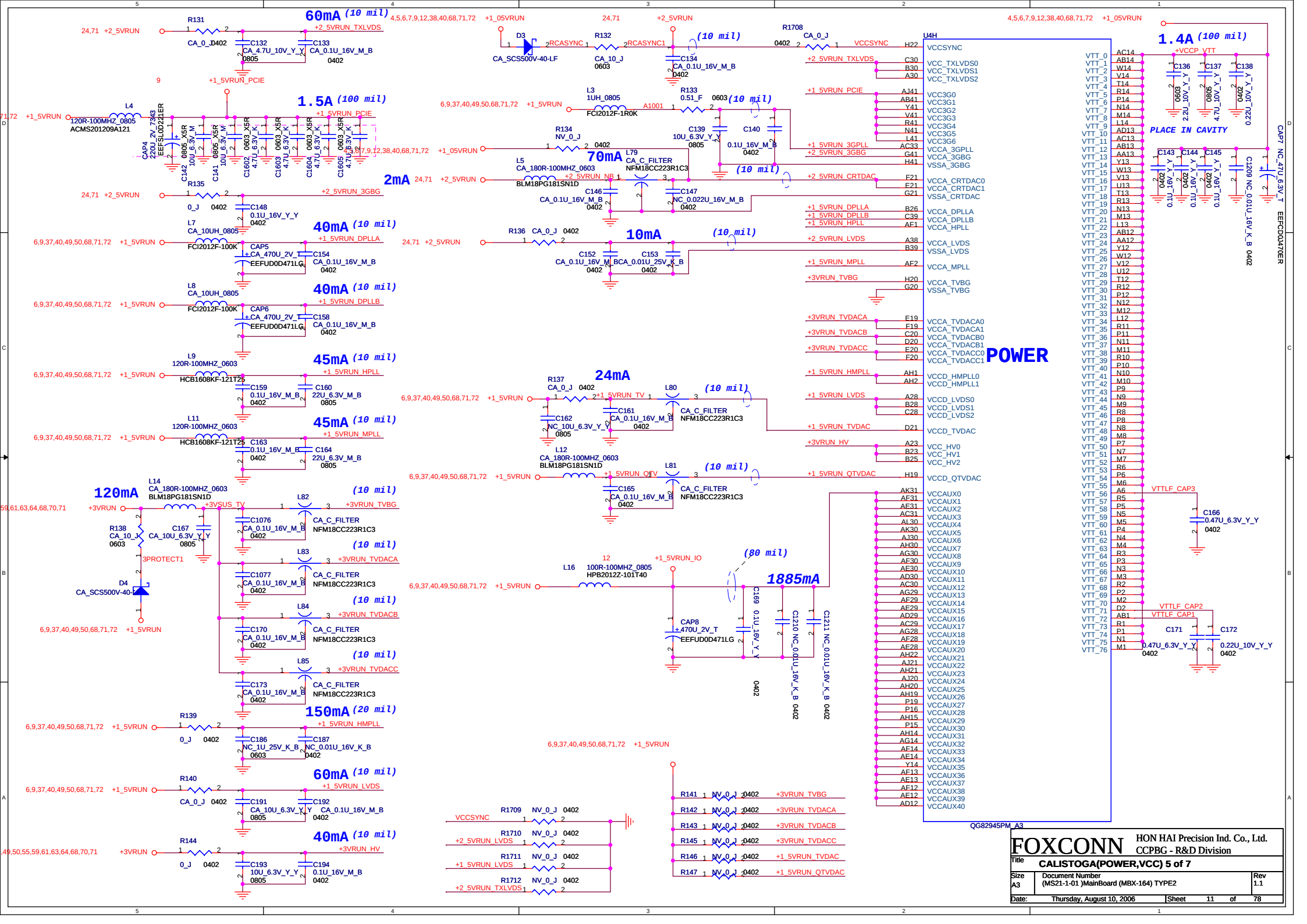

FOXCONN	HON HAI Precision Ind. Co., Ltd. CCPBG - R&D Division
Title	CALISTOGA(POWER,VCC) 5 of 7
Size A3	Document Number (MS21-1-01)MainBoard (MBX-164) TYPE2
Rev	1.1
Date: Thursday, August 10, 2006	Sheet 11 of 78

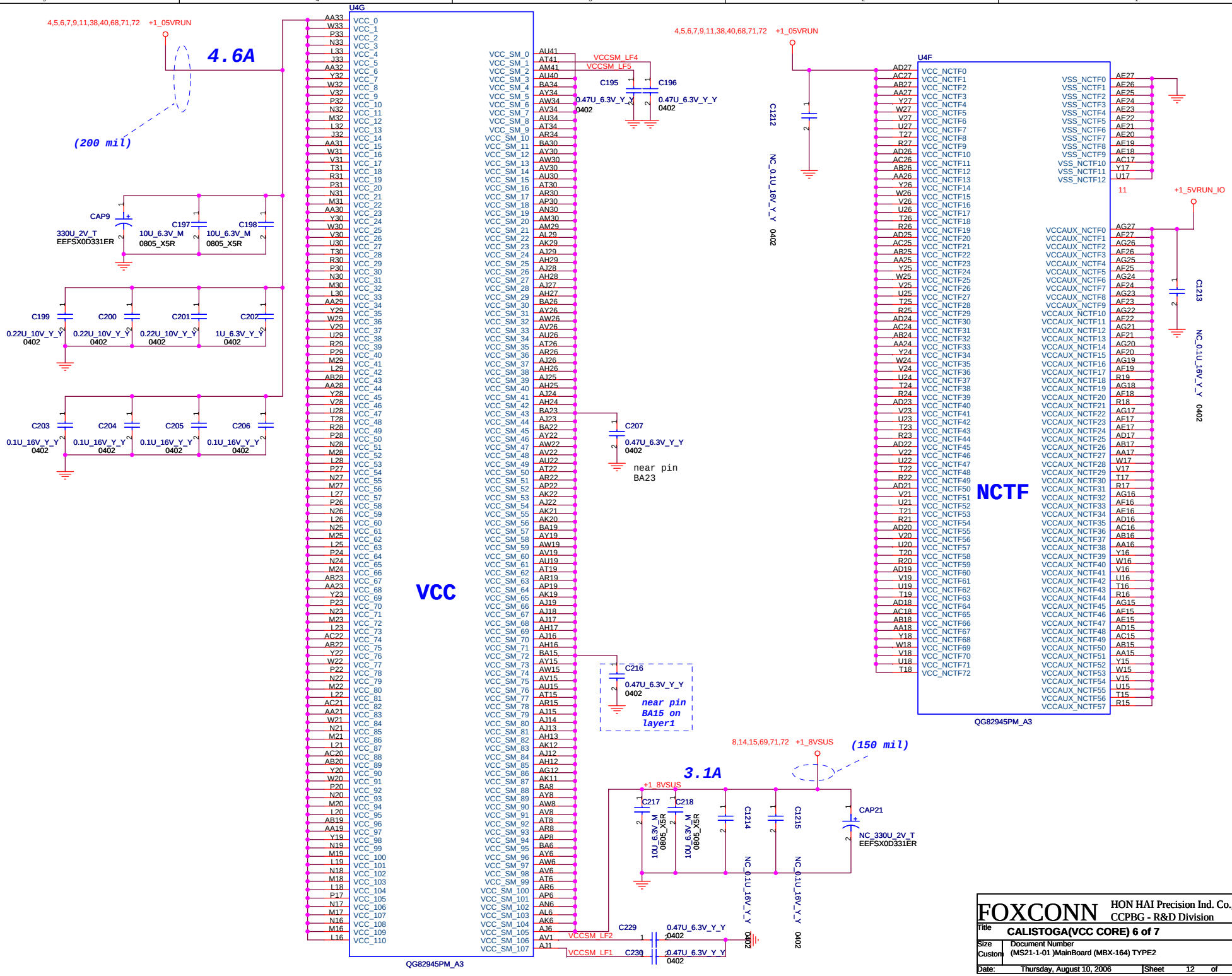

FOXCONN	HON HAI Precision Ind. Co., Ltd. CCPBG - R&D Division	
Title	CALISTOGA(VCC CORE) 6 of 7	
Size Custom	Document Number (MS21-1-01)MainBoard (MBX-164) TYPE2	Rev 1.1
Date: Thursday, August 10, 2006	Sheet 12 of 78	

8 MCH_CFG_5 — 1 — 30MIL TP554

MCH_CFG_5	Low = DMIx2 High = DMIx4

8 MCH_CFG_6 — 1 — 30MIL TP556

MCH_CFG_6	Low = Moby Dick High = Calistoga

DDR2 select (default high)

8 TP_MCH_CFG_7 — TP_MCH_CFG_7

MCH_CFG_7 (CPU Strap)	Low = RSVD High = Mobile Yonah processor

8 MCH_CFG_9 — 1 — 30MIL TP559

MCH_CFG_9 (PCIE Graphics Lane)	Low = Reverse Lane High = Normal operation

For layout convenience

8 MCH_CFG_10 — 1 — 30MIL TP560

MCH_CFG_10 (HOST PLL VCC SELECT)	Low = RESERVED High = MOBILITY

8 MCH_CFG_11

MCH_CFG_11 (PSB 4x CLK ENABLE)	Low = Calistoga High = Reserved

R162
NC_2.2K_J
0402

8 MCH_CFG_12 — 1 — 30MIL TP562
8 MCH_CFG_13 — 1 — 30MIL TP563

MCH_CFG_[13:12] (XOR/ALLZ)	00=Partial Clock Gating Disable 01=XOR Mode Enable 10=All-Z Mode Enable 11=Normal Operation(Default)

8 MCH_CFG_16 — 1 — 30MIL TP564

MCH_CFG_16 (FSB Dynamic ODT)	Low = Dynamic ODT Disabled High = Dynamic ODT Enable

MCH_CFG_18 (VCC_CORE Select)	Low = 1.05V(default) High = 1.5V

8 MCH_CFG_18 — 1 — 30MIL TP555

MCH_CFG_19 (DMI LANE REVERSAL)	Low = Normal(default) High = LANES REVERSED

8 MCH_CFG_19 — 1 — 30MIL TP558

MCH_CFG_20 (PCIe Backward Interpoerability mode)	Low = Only SDVO or PCIE x1 is operational (defaults)) High = SDVO and PCIE x1 are operating simultaneously via the PEG port

8 MCH_CFG_20 — 1 — 30MIL TP561

Layout Noe:
Location of all MCH_CFG strap resistors needs to be close to trace to minimize stub

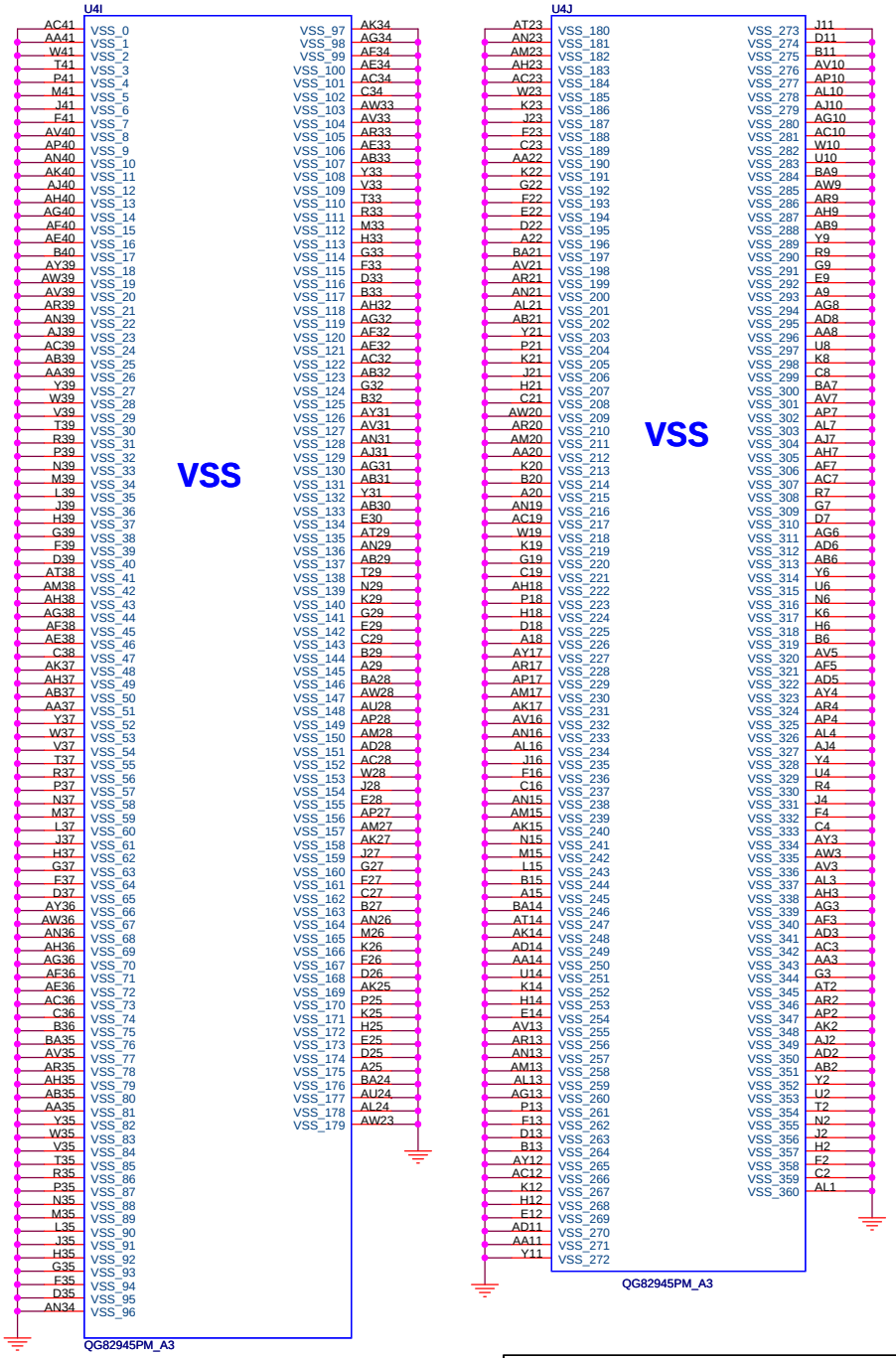

FOXCONN
HON HAI Precision Ind. Co., Ltd.
CCPBG - R&D Division

Title	CALISTOGA(VSS) 7 of 7	
Size A3	Document Number (MS21-1-01)MainBoard (MBX-164) TYPE2	Rev 1.1
Date: Thursday, August 10, 2006	Sheet 13 of 78	

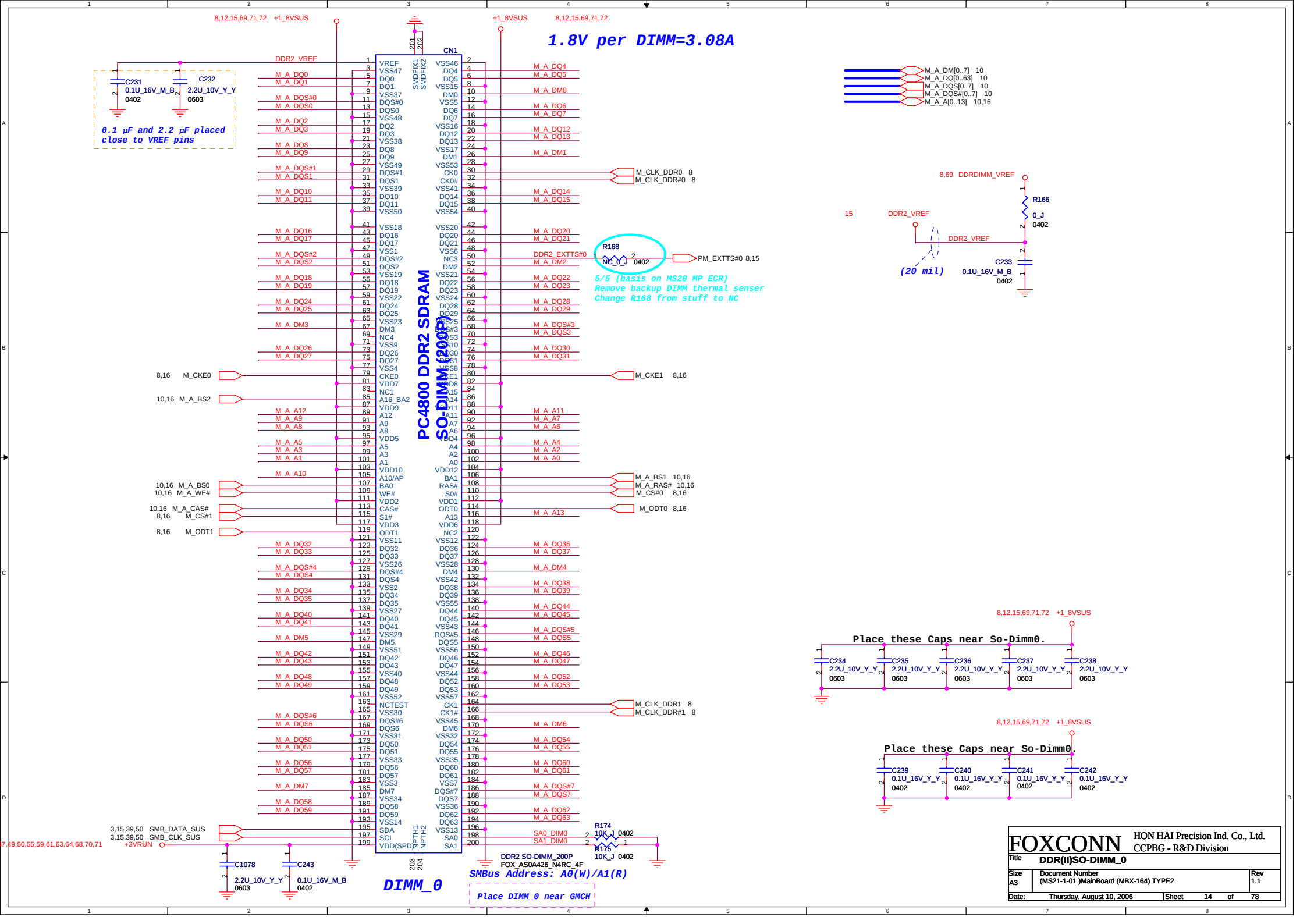
1.8V per DIMM=3.08A
CN1
PC4800 DDR2 SDRAM SO-DIMM(200P)
DDR2 SO-DIMM_200P
FOX_AS0A426_N4RC_4F
DIMM_0
SMBus Address: A0(W)/A1(R)
Place DIMM_0 near GMCH
0.1 µF and 2.2 µF placed close to VREF pins
5/5 (basis on MS20 MP ECR)
Remove backup DIMM thermal senser
Change R168 from stuff to NC
(20 mil)
Place these Caps near So-Dimm0.
Place these Caps near So-Dimm0.
FOXCONN
HON HAI Precision Ind. Co., Ltd.
CCPBG - R&D Division
Title DDR(II)SO-DIMM_0
Size A3
Document Number (MS21-1-01)MainBoard (MBX-164) TYPE2
Rev 1.1
Date: Thursday, August 10, 2006
Sheet 14 of 78

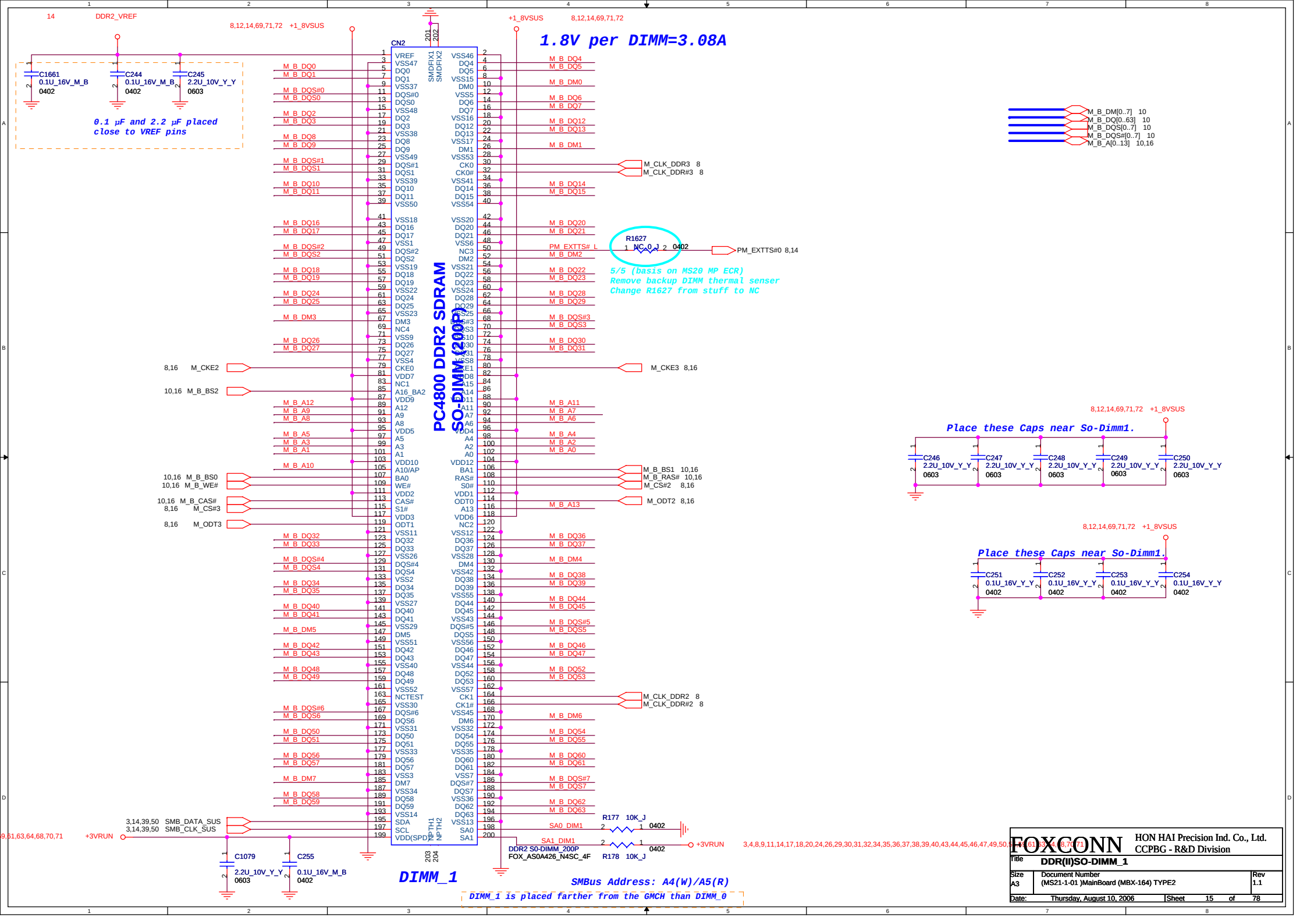

FOXCONN HON HAI Precision Ind. Co., Ltd. CCPBG - R&D Division

Title	DDR(II)SO-DIMM_1	
Size A3	Document Number (MS21-1-01)MainBoard (MBX-164) TYPE2	Rev 1.1
Date: Thursday, August 10, 2006	Sheet 15 of 78	

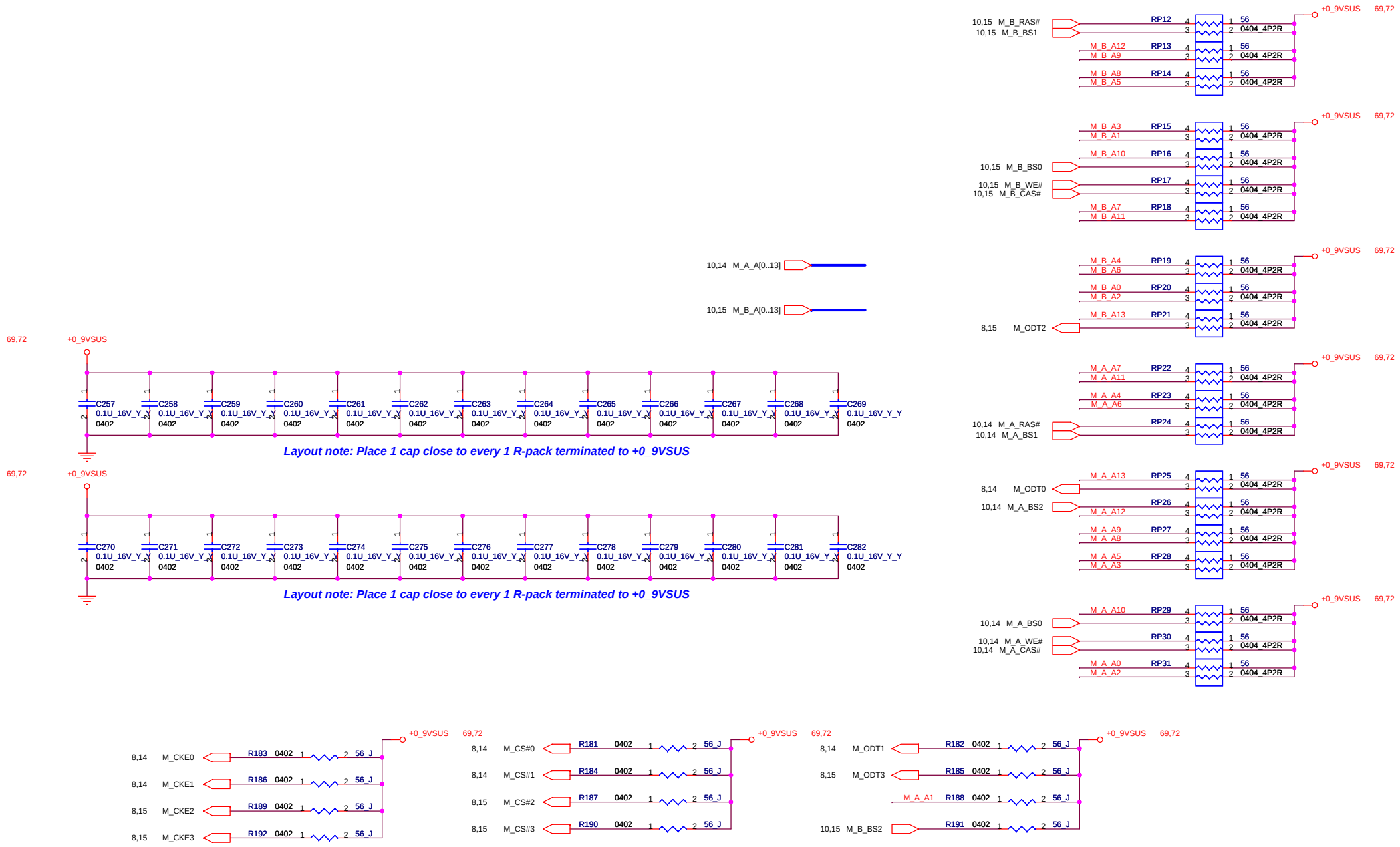

FOXCONN	HON HAI Precision Ind. Co., Ltd. CCPBG - R&D Division	
Title	DDR(II)Termination	
Size A3	Document Number (MS21-1-01)MainBoard (MBX-164) TYPE2	Rev 1.1
Date: Thursday, August 10, 2006	Sheet 16 of 78	

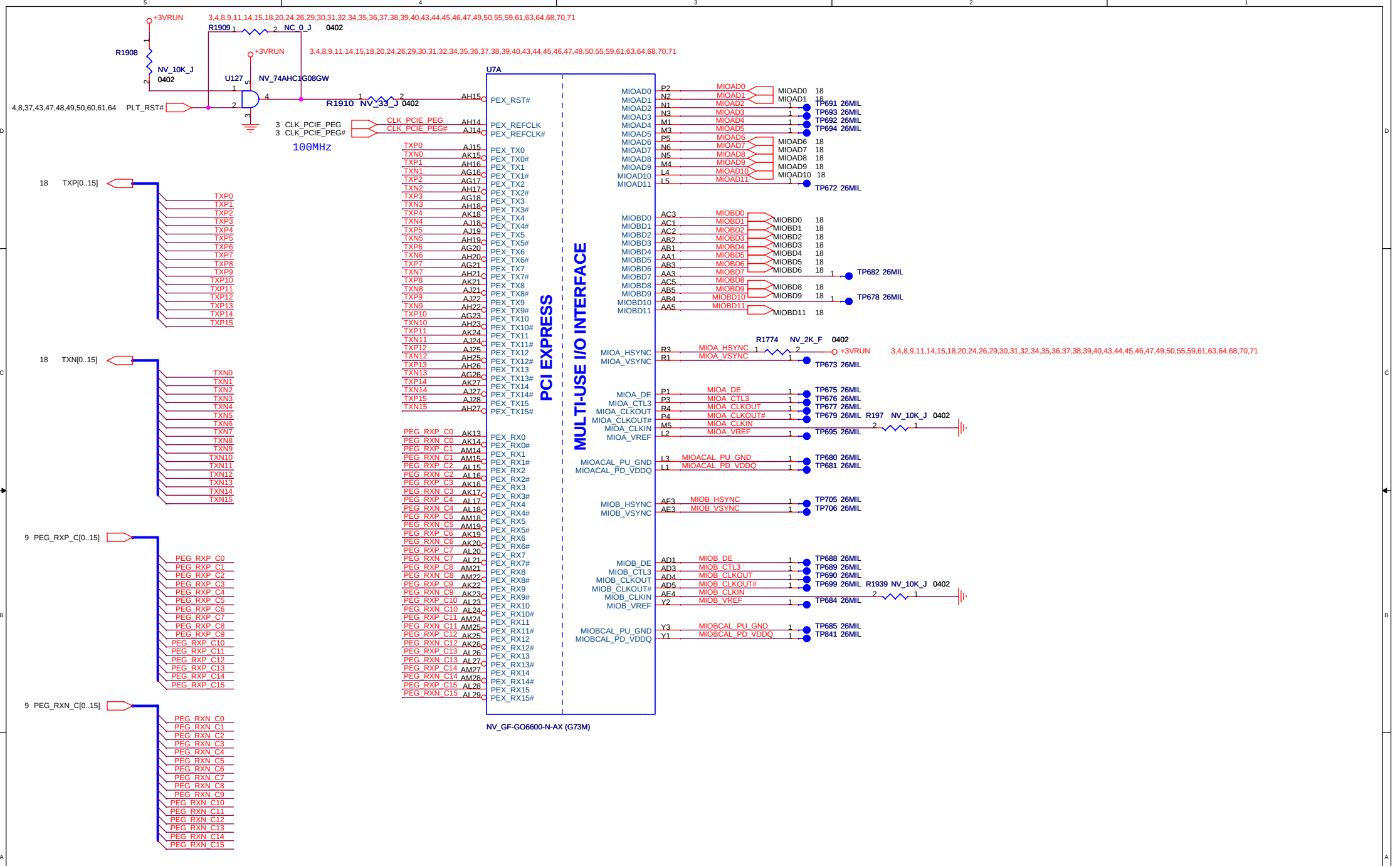

FOXCONN	HON HAI Precision Ind. Co., Ltd. CCPBG - R&D Division	
Title	VGA (PCI EXPRESS) 1 OF 8	
Size A3	Document Number (MS21-1-01)MainBoard (MBX-164) TYPE2	Rev 1.1
Date: Thursday, August 10, 2006	Sheet 17 of 78	

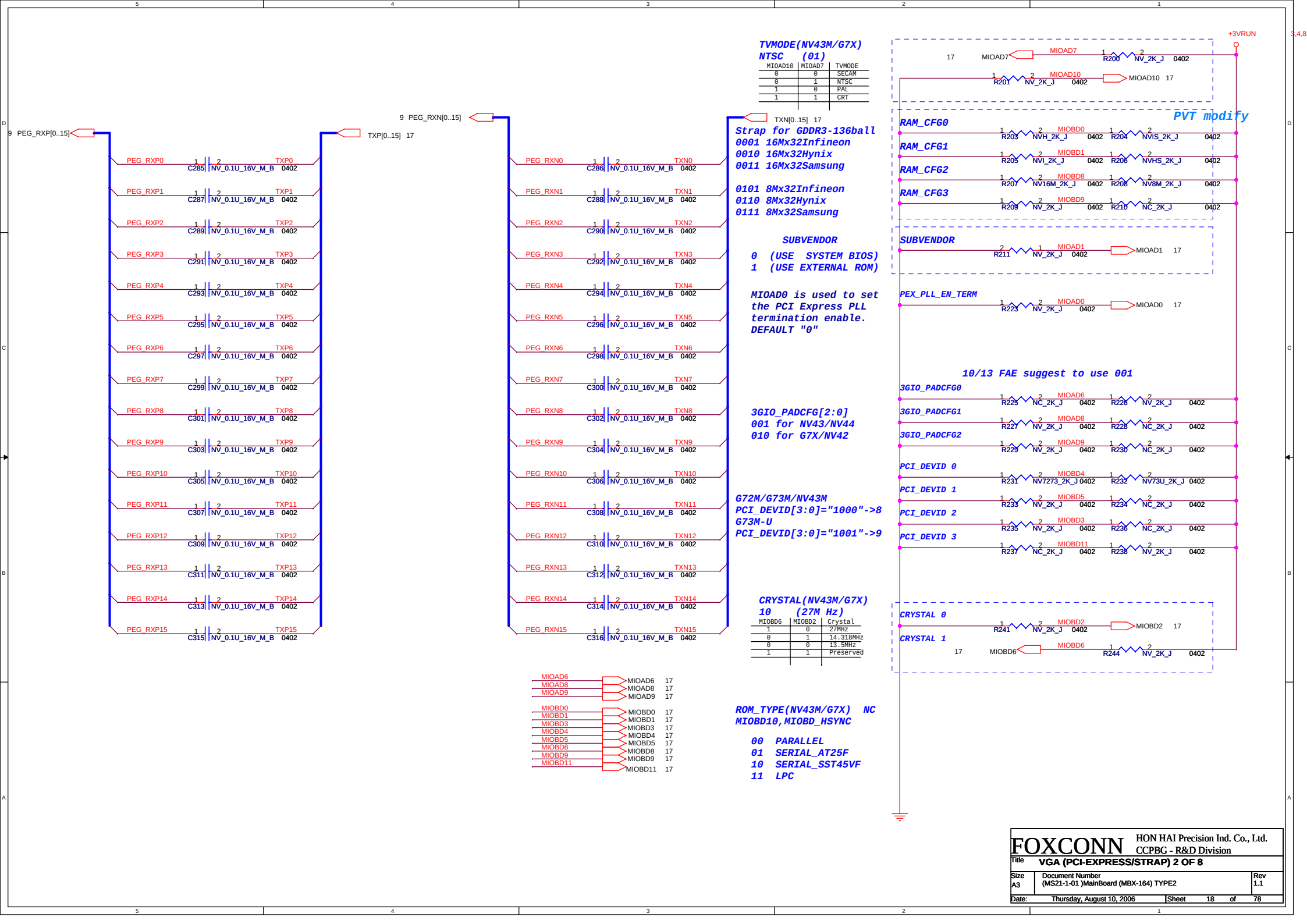
9 PEG_RXP[0..15]
TXP[0..15] 17
9 PEG_RXN[0..15]
TXN[0..15] 17
PEG_RXP0 C285 NV_0.1U_16V_M_B 0402 TXP0
PEG_RXP1 C287 NV_0.1U_16V_M_B 0402 TXP1
PEG_RXP2 C289 NV_0.1U_16V_M_B 0402 TXP2
PEG_RXP3 C291 NV_0.1U_16V_M_B 0402 TXP3
PEG_RXP4 C293 NV_0.1U_16V_M_B 0402 TXP4
PEG_RXP5 C295 NV_0.1U_16V_M_B 0402 TXP5
PEG_RXP6 C297 NV_0.1U_16V_M_B 0402 TXP6
PEG_RXP7 C299 NV_0.1U_16V_M_B 0402 TXP7
PEG_RXP8 C301 NV_0.1U_16V_M_B 0402 TXP8
PEG_RXP9 C303 NV_0.1U_16V_M_B 0402 TXP9
PEG_RXP10 C305 NV_0.1U_16V_M_B 0402 TXP10
PEG_RXP11 C307 NV_0.1U_16V_M_B 0402 TXP11
PEG_RXP12 C309 NV_0.1U_16V_M_B 0402 TXP12
PEG_RXP13 C311 NV_0.1U_16V_M_B 0402 TXP13
PEG_RXP14 C313 NV_0.1U_16V_M_B 0402 TXP14
PEG_RXP15 C315 NV_0.1U_16V_M_B 0402 TXP15
PEG_RXN0 C286 NV_0.1U_16V_M_B 0402 TXN0
PEG_RXN1 C288 NV_0.1U_16V_M_B 0402 TXN1
PEG_RXN2 C290 NV_0.1U_16V_M_B 0402 TXN2
PEG_RXN3 C292 NV_0.1U_16V_M_B 0402 TXN3
PEG_RXN4 C294 NV_0.1U_16V_M_B 0402 TXN4
PEG_RXN5 C296 NV_0.1U_16V_M_B 0402 TXN5
PEG_RXN6 C298 NV_0.1U_16V_M_B 0402 TXN6
PEG_RXN7 C300 NV_0.1U_16V_M_B 0402 TXN7
PEG_RXN8 C302 NV_0.1U_16V_M_B 0402 TXN8
PEG_RXN9 C304 NV_0.1U_16V_M_B 0402 TXN9
PEG_RXN10 C306 NV_0.1U_16V_M_B 0402 TXN10
PEG_RXN11 C308 NV_0.1U_16V_M_B 0402 TXN11
PEG_RXN12 C310 NV_0.1U_16V_M_B 0402 TXN12
PEG_RXN13 C312 NV_0.1U_16V_M_B 0402 TXN13
PEG_RXN14 C314 NV_0.1U_16V_M_B 0402 TXN14
PEG_RXN15 C316 NV_0.1U_16V_M_B 0402 TXN15
MIOAD6 MIOAD6 17
MIOAD8 MIOAD8 17
MIOAD9 MIOAD9 17
MIOBD0 MIOBD0 17
MIOBD1 MIOBD1 17
MIOBD3 MIOBD3 17
MIOBD4 MIOBD4 17
MIOBD5 MIOBD5 17
MIOBD8 MIOBD8 17
MIOBD9 MIOBD9 17
MIOBD11 MIOBD11 17
TVMODE(NV43M/G7X)
NTSC (01)
MIOAD10 MIOAD7 TVMODE
0 0 SECAM
0 1 NTSC
1 0 PAL
1 1 CRT
Strap for GDDR3-136ball
0001 16Mx32Infineon
0010 16Mx32Hynix
0011 16Mx32Samsung
0101 8Mx32Infineon
0110 8Mx32Hynix
0111 8Mx32Samsung
SUBVENDOR
0 (USE SYSTEM BIOS)
1 (USE EXTERNAL ROM)
MIOAD0 is used to set the PCI Express PLL termination enable. DEFAULT "0"
3GIO_PADCFG[2:0]
001 for NV43/NV44
010 for G7X/NV42
G72M/G73M/NV43M
PCI_DEVID[3:0]="1000"->8
G73M-U
PCI_DEVID[3:0]="1001"->9
CRYSTAL(NV43M/G7X)
10 (27M Hz)
MIOBD6 MIOBD2 Crystal
1 0 27MHz
0 1 14.318MHz
0 0 13.5MHz
1 1 Preserved
ROM_TYPE(NV43M/G7X) NC
MIOBD10,MIOBD_HSYNC
00 PARALLEL
01 SERIAL_AT25F
10 SERIAL_SST45VF
11 LPC
+3VRUN
3,4,8
17 MIOAD7 MIOAD7 R200 NV_2K_J 0402
R201 NV_2K_J 0402 MIOAD10 MIOAD10 17
PVT modify
RAM_CFG0 R203 NVH_2K_J 0402 MIOBD0 R204 NVIS_2K_J 0402
RAM_CFG1 R205 NVI_2K_J 0402 MIOBD1 R206 NVHS_2K_J 0402
RAM_CFG2 R207 NV16M_2K_J 0402 MIOBD8 R208 NV8M_2K_J 0402
RAM_CFG3 R209 NV_2K_J 0402 MIOBD9 R210 NC_2K_J 0402
SUBVENDOR R211 NV_2K_J 0402 MIOAD1 MIOAD1 17
PEX_PLL_EN_TERM R223 NV_2K_J 0402 MIOAD0 MIOAD0 17
10/13 FAE suggest to use 001
3GIO_PADCFG0 R225 NC_2K_J 0402 MIOAD6 R226 NV_2K_J 0402
3GIO_PADCFG1 R227 NV_2K_J 0402 MIOAD8 R228 NC_2K_J 0402
3GIO_PADCFG2 R229 NV_2K_J 0402 MIOAD9 R230 NC_2K_J 0402
PCI_DEVID 0 R231 NV7273_2K_J 0402 MIOBD4 R232 NV73U_2K_J 0402
PCI_DEVID 1 R233 NV_2K_J 0402 MIOBD5 R234 NC_2K_J 0402
PCI_DEVID 2 R235 NV_2K_J 0402 MIOBD3 R236 NC_2K_J 0402
PCI_DEVID 3 R237 NC_2K_J 0402 MIOBD11 R238 NV_2K_J 0402
CRYSTAL 0 R241 NV_2K_J 0402 MIOBD2 MIOBD2 17
CRYSTAL 1 17 MIOBD6 MIOBD6 R244 NV_2K_J 0402
FOXCONN
HON HAI Precision Ind. Co., Ltd.
CCPBG - R&D Division
Title VGA (PCI-EXPRESS/STRAP) 2 OF 8
Size A3
Document Number (MS21-1-01)MainBoard (MBX-164) TYPE2
Rev 1.1
Date: Thursday, August 10, 2006
Sheet 18 of 78

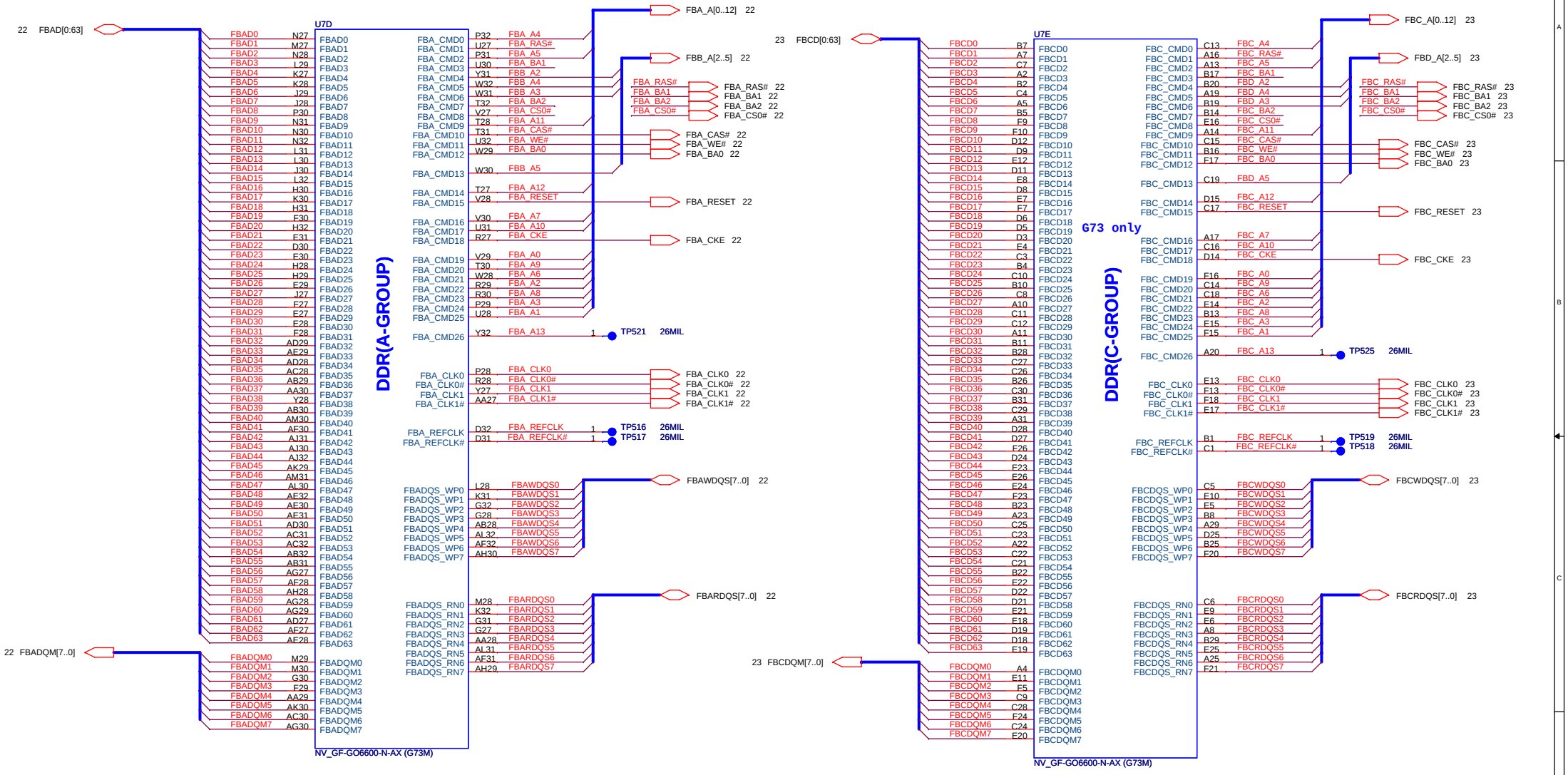

FOXCONN	HON HAI Precision Ind. Co., Ltd. CCPBG - R&D Division	
Title	VGA (GDDR) 3 OF 8	
Size A3	Document Number (MS21-1-01)MainBoard (MBX-164) TYPE2	Rev 1.1
Date: Thursday, August 10, 2006	Sheet 19 of 78	

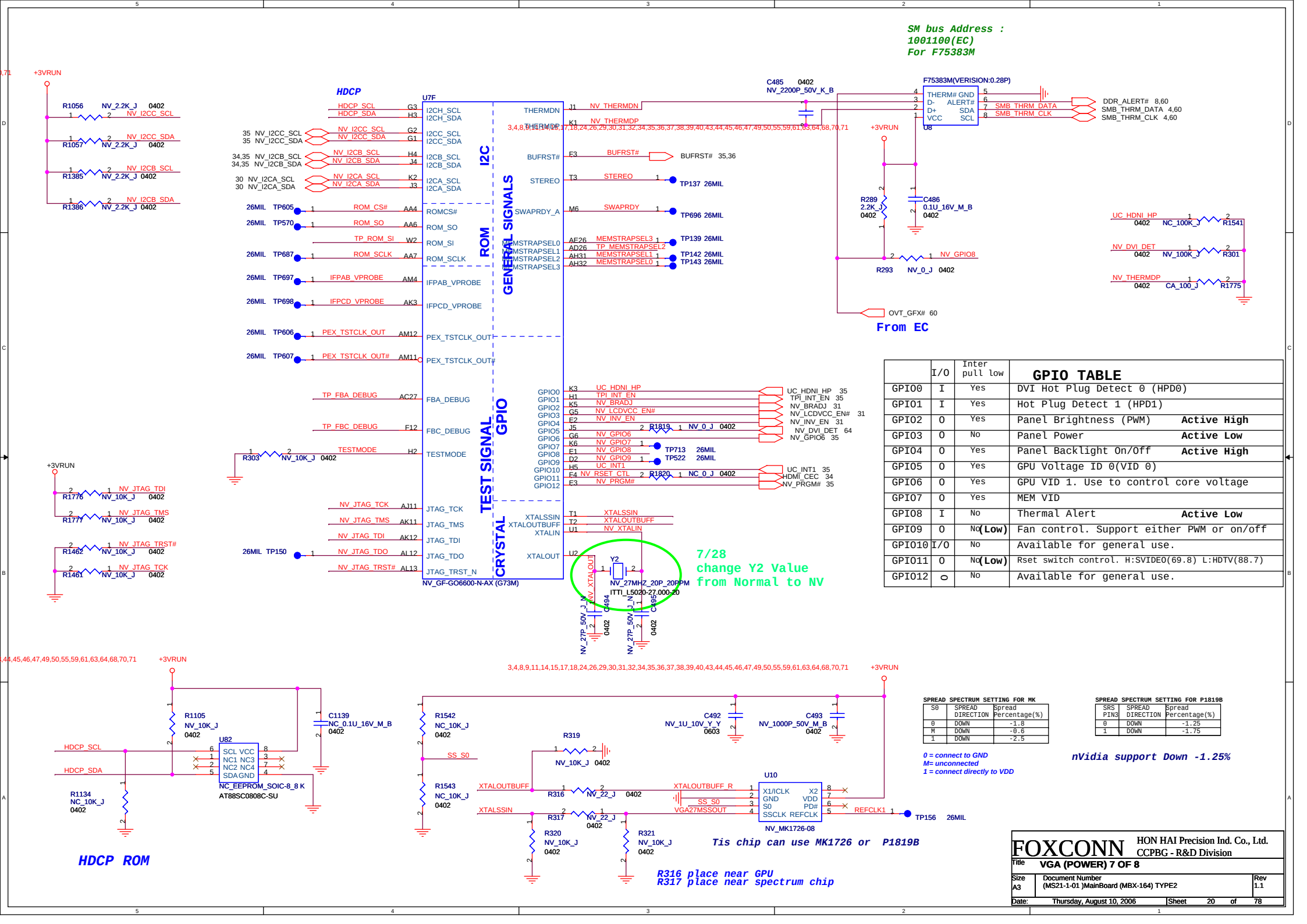

GPIO TABLE

	I/O	Inter pull low	
GPIO0	I	Yes	DVI Hot Plug Detect 0 (HPD0)
GPIO1	I	Yes	Hot Plug Detect 1 (HPD1)
GPIO2	O	Yes	Panel Brightness (PWM) **Active High**
GPIO3	O	No	Panel Power **Active Low**
GPIO4	O	Yes	Panel Backlight On/Off **Active High**
GPIO5	O	Yes	GPU Voltage ID 0(VID 0)
GPIO6	O	Yes	GPU VID 1. Use to control core voltage
GPIO7	O	Yes	MEM VID
GPIO8	I	No	Thermal Alert **Active Low**
GPIO9	O	No(Low)	Fan control. Support either PWM or on/off
GPIO10	I/O	No	Available for general use.
GPIO11	O	No(Low)	Rset switch control. H:SVIDEO(69.8) L:HDTV(88.7)
GPIO12	O	No	Available for general use.

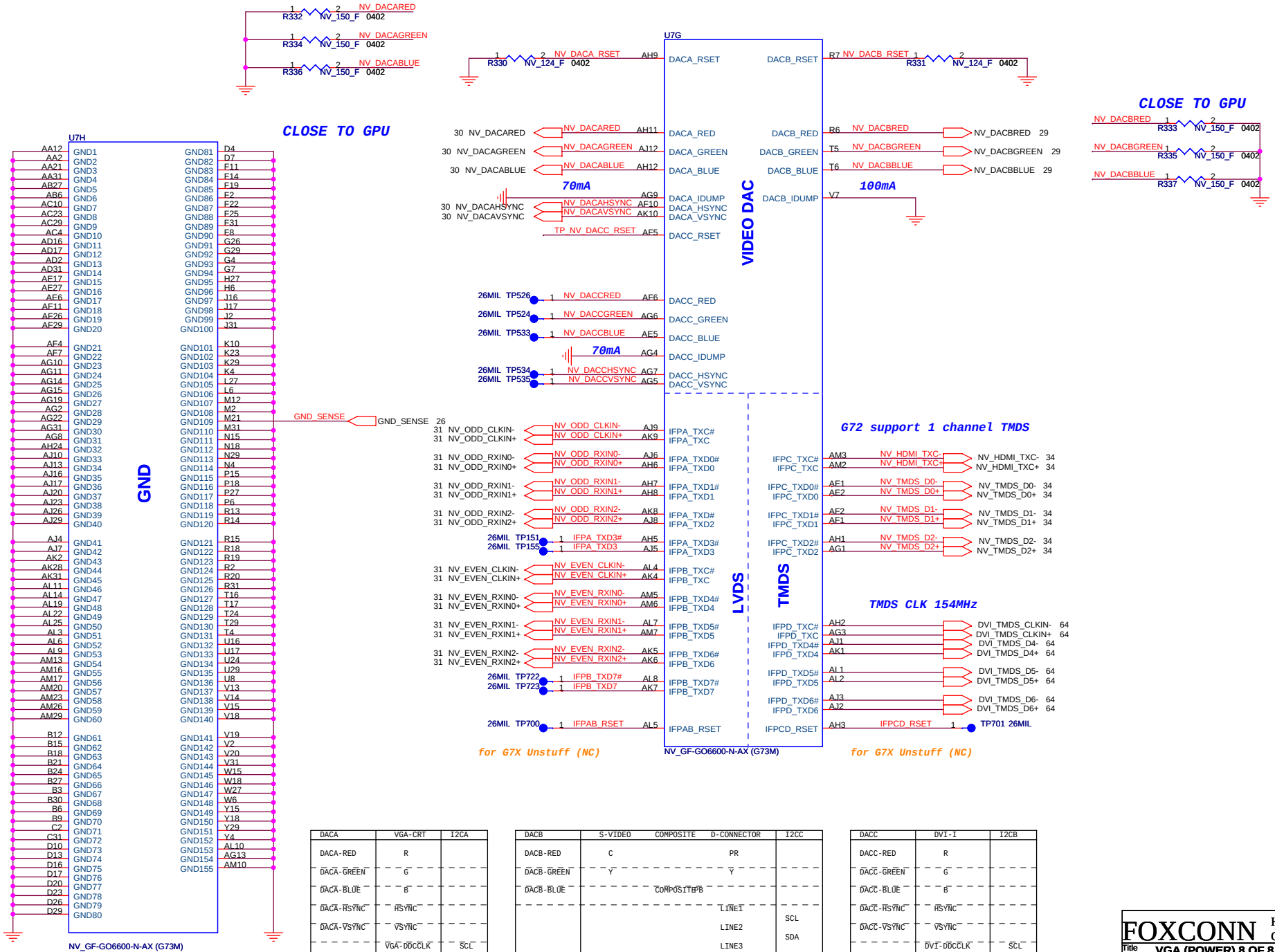

DACA	VGA-CRT	I2CA
DACA-RED	R	
DACA-GREEN	G	
DACA-BLUE	B	
DACA-HSYNC	HSYNC	
DACA-VSYNC	VSYNC	
	VGA-DDCCLK	SCL
	VGA-DDCDATA	SDA

DACB	S-VIDEO	COMPOSITE	D-CONNECTOR	I2CC
DACB-RED	C		PR	
DACB-GREEN	Y		Y	
DACB-BLUE		COMPOSITE PB		
			LINE1	SCL
			LINE2	SDA
			LINE3	

DACC	DVI-I	I2CB
DACC-RED	R	
DACC-GREEN	G	
DACC-BLUE	B	
DACC-HSYNC	HSYNC	
DACC-VSYNC	VSYNC	
	DVI-DDCCLK	SCL
	DVI-DDCDATA	SDA

FOXCONN HON HAI Precision Ind. Co., Ltd.
CCPBG - R&D Division

Title: VGA (POWER) 8 OF 8

Size: A3 | Document Number: (MS21-1-01)MainBoard (MBX-164) TYPE2 | Rev: 1.1

Date: Thursday, August 10, 2006 | Sheet 21 of 78

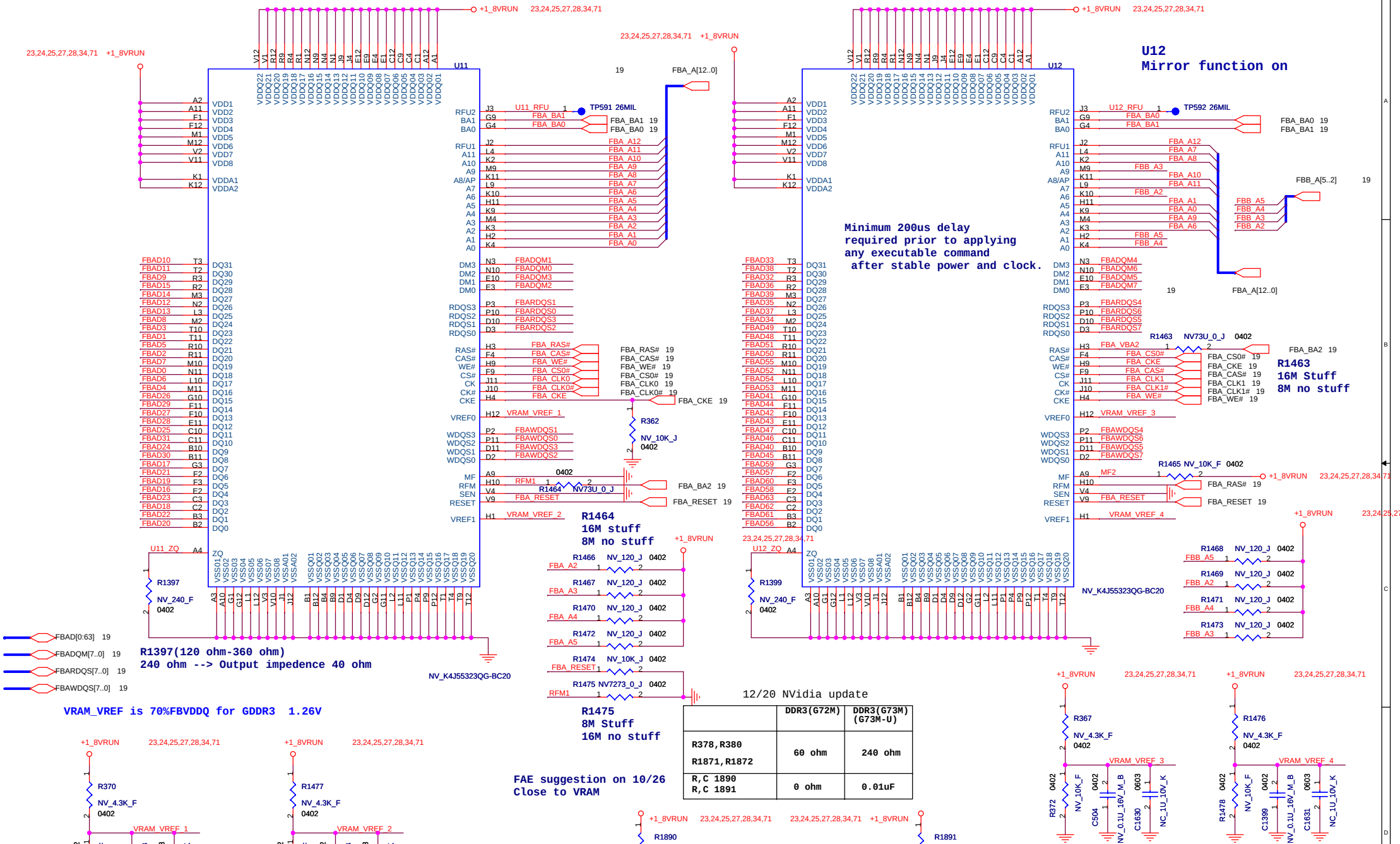

	DDR3(G72M)	DDR3(G73M) (G73M-U)
R378,R380 R1871,R1872	60 ohm	240 ohm
R,C 1890 R,C 1891	0 ohm	0.01uF

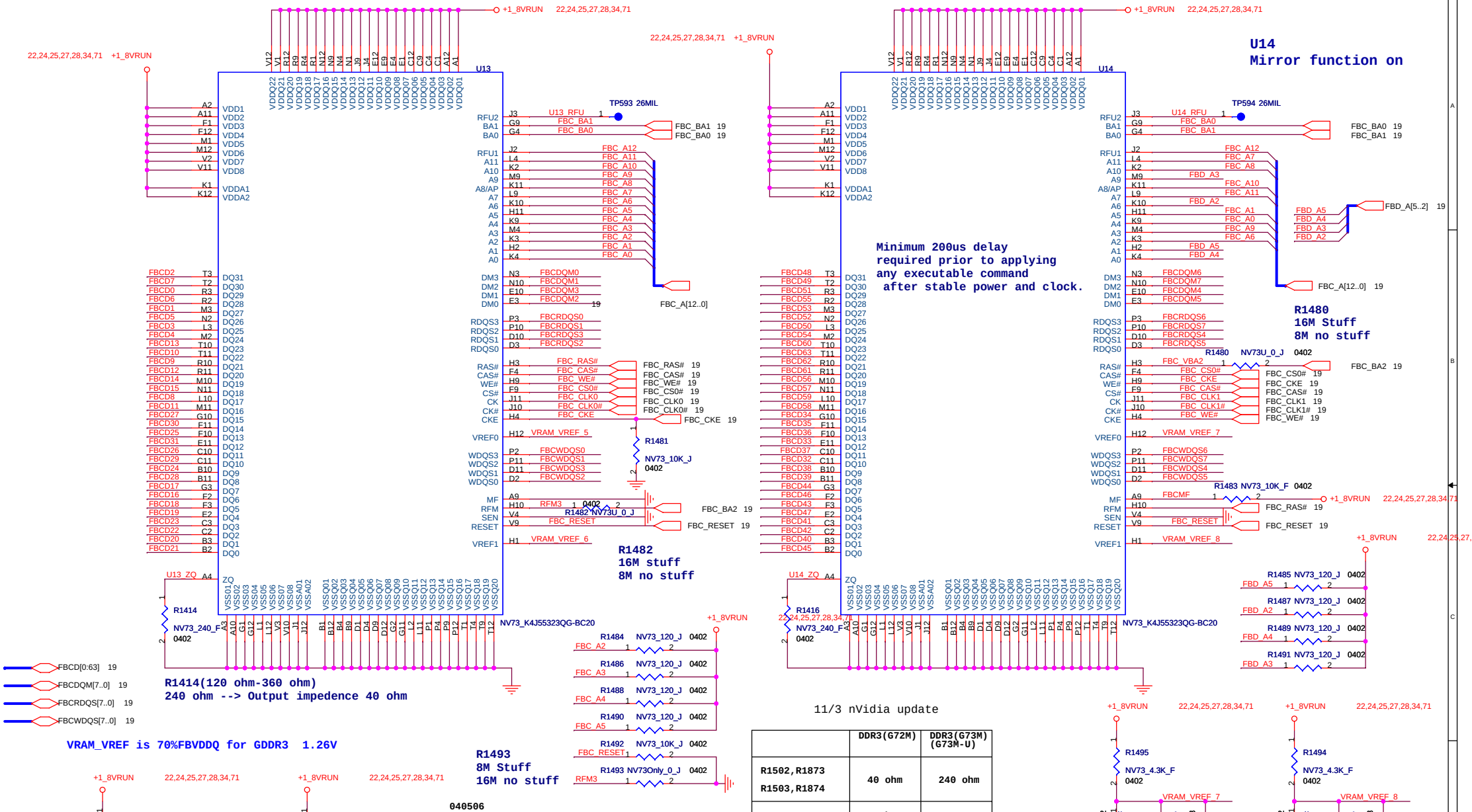

	DDR3(G72M)	DDR3(G73M) (G73M-U)
R1502,R1873 R1503,R1874	40 ohm	240 ohm
C1582,C1583	0 ohm	0.01uF

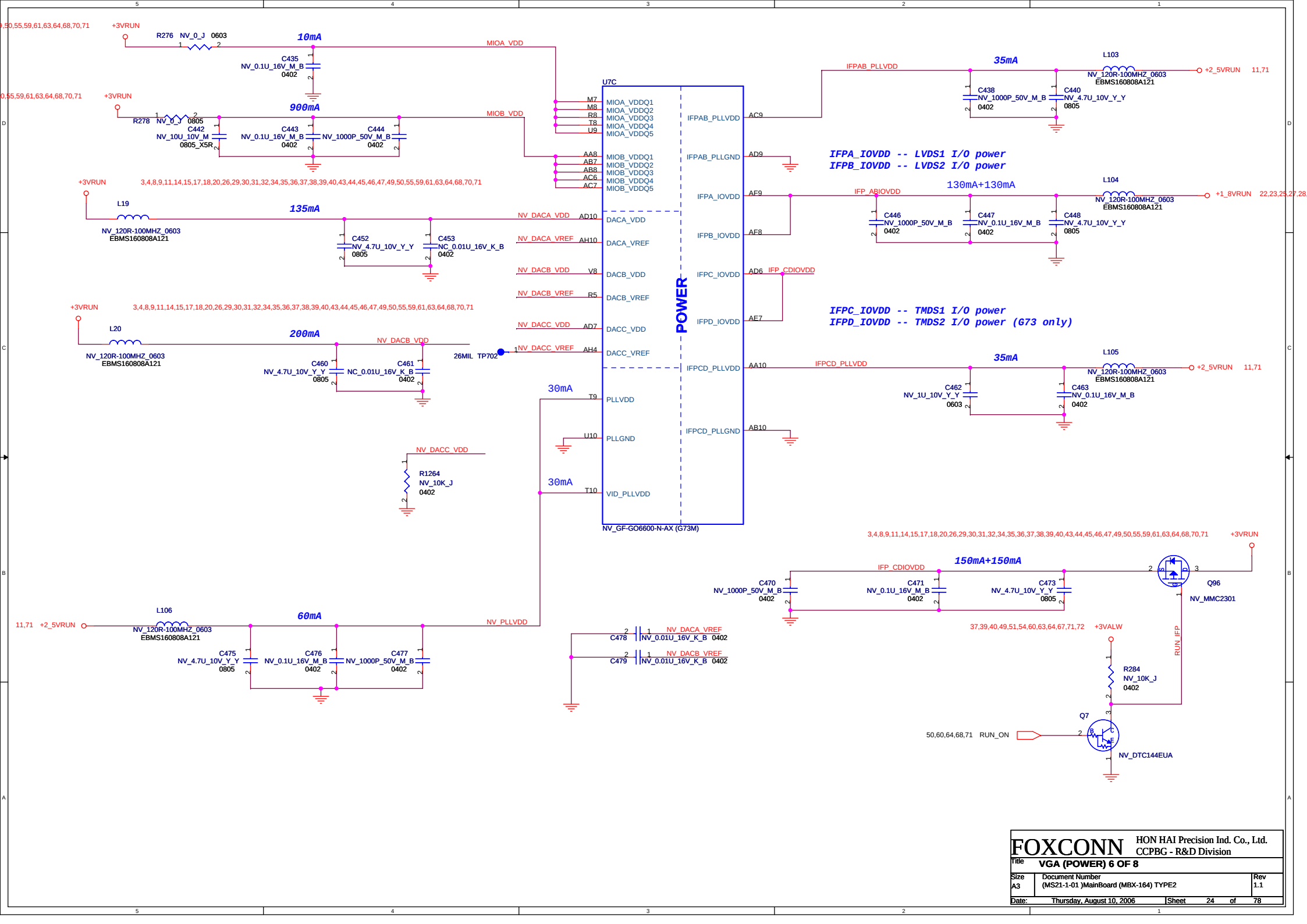
U7C
POWER
NV_GF-GO6600-N-AX (G73M)
MIOA_VDDQ1
MIOA_VDDQ2
MIOA_VDDQ3
MIOA_VDDQ4
MIOA_VDDQ5
MIOB_VDDQ1
MIOB_VDDQ2
MIOB_VDDQ3
MIOB_VDDQ4
MIOB_VDDQ5
DACA_VDD
DACA_VREF
DACB_VDD
DACB_VREF
DACC_VDD
DACC_VREF
PLLVDD
PLLGND
VID_PLLVDD
IFPAB_PLLVDD
IFPAB_PLLGND
IFPA_IOVDD
IFPB_IOVDD
IFPC_IOVDD
IFPD_IOVDD
IFPCD_PLLVDD
IFPCD_PLLGND
MIOA_VDD
MIOB_VDD
NV_DACA_VDD
NV_DACA_VREF
NV_DACB_VDD
NV_DACB_VREF
NV_DACC_VDD
NV_DACC_VREF
NV_PLLVDD
IFPAB_PLLVDD
IFPA_IOVDD
IFP_CDIOVDD
IFPCD_PLLVDD
IFPA_IOVDD -- LVDS1 I/O power
IFPB_IOVDD -- LVDS2 I/O power
IFPC_IOVDD -- TMDS1 I/O power
IFPD_IOVDD -- TMDS2 I/O power (G73 only)
10mA
900mA
135mA
200mA
30mA
30mA
35mA
130mA+130mA
35mA
150mA+150mA
60mA
R276 NV_0_J 0603
R278 NV_0_J 0805
C435 NV_0.1U_16V_M_B 0402
C442 NV_10U_10V_M 0805_X5R
C443 NV_0.1U_16V_M_B 0402
C444 NV_1000P_50V_M_B 0402
L19 NV_120R-100MHZ_0603 EBMS160808A121
C452 NV_4.7U_10V_Y_Y 0805
C453 NC_0.01U_16V_K_B 0402
L20 NV_120R-100MHZ_0603 EBMS160808A121
C460 NV_4.7U_10V_Y_Y 0805
C461 NC_0.01U_16V_K_B 0402
26MIL TP702
R1264 NV_10K_J 0402
L106 NV_120R-100MHZ_0603 EBMS160808A121
C475 NV_4.7U_10V_Y_Y 0805
C476 NV_0.1U_16V_M_B 0402
C477 NV_1000P_50V_M_B 0402
C478 NV_0.01U_16V_K_B 0402
C479 NV_0.01U_16V_K_B 0402
L103 NV_120R-100MHZ_0603 EBMS160808A121
C438 NV_1000P_50V_M_B 0402
C440 NV_4.7U_10V_Y_Y 0805
L104 NV_120R-100MHZ_0603 EBMS160808A121
C446 NV_1000P_50V_M_B 0402
C447 NV_0.1U_16V_M_B 0402
C448 NV_4.7U_10V_Y_Y 0805
L105 NV_120R-100MHZ_0603 EBMS160808A121
C462 NV_1U_10V_Y_Y 0603
C463 NV_0.1U_16V_M_B 0402
C470 NV_1000P_50V_M_B 0402
C471 NV_0.1U_16V_M_B 0402
C473 NV_4.7U_10V_Y_Y 0805
Q96 NV_MMC2301
R284 NV_10K_J 0402
Q7 NV_DTC144EUA
RUN_IFP
RUN_ON
+3VRUN
+2_5VRUN
+1_8VRUN
+3VALW
FOXCONN
HON HAI Precision Ind. Co., Ltd.
CCPBG - R&D Division
Title VGA (POWER) 6 OF 8
Size A3
Document Number (MS21-1-01)MainBoard (MBX-164) TYPE2
Rev 1.1
Date: Thursday, August 10, 2006
Sheet 24 of 78

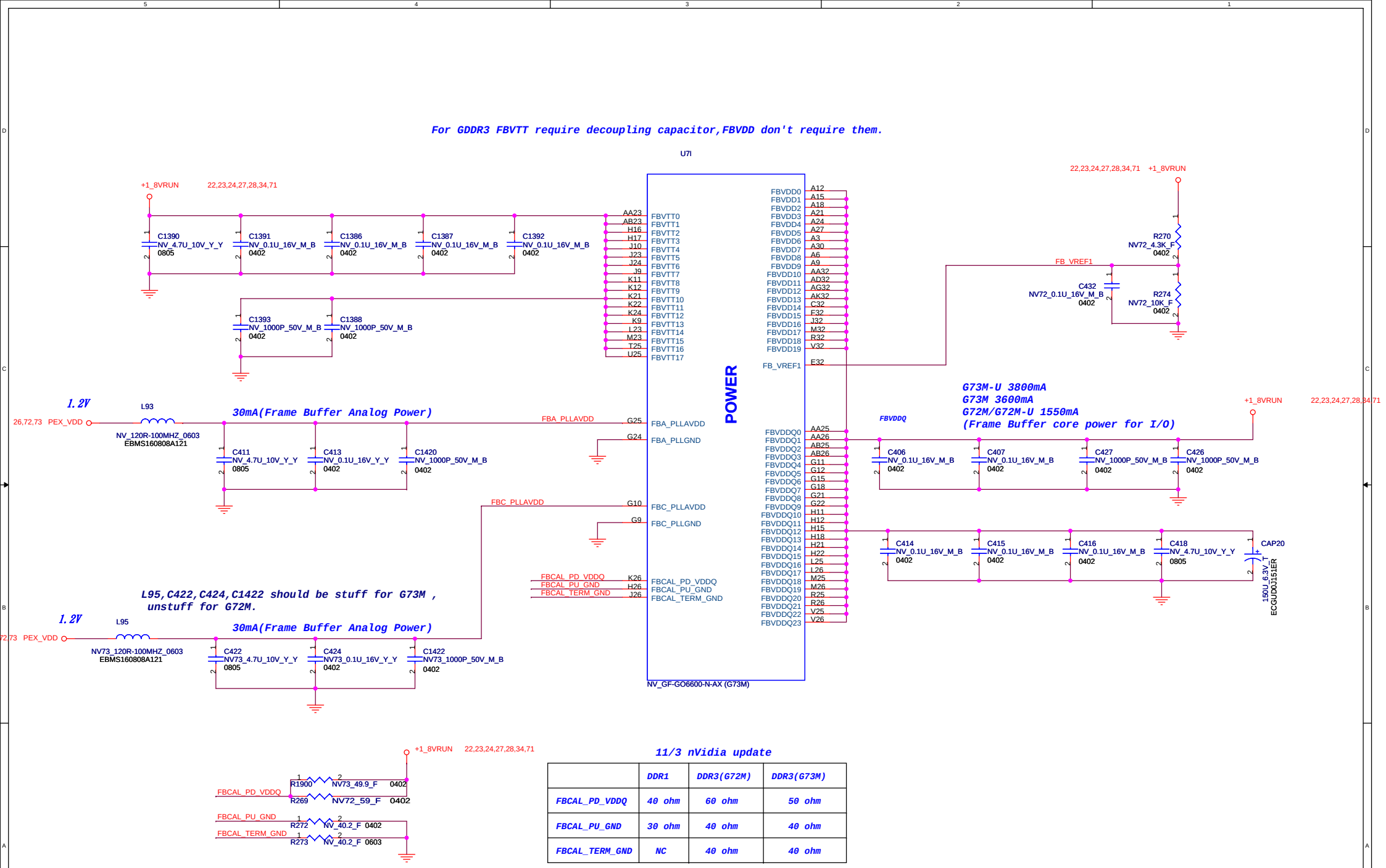

11/3 nVidia update

	DDR1	DDR3(G72M)	DDR3(G73M)
FBCAL_PD_VDDQ	40 ohm	60 ohm	50 ohm
FBCAL_PU_GND	30 ohm	40 ohm	40 ohm
FBCAL_TERM_GND	NC	40 ohm	40 ohm

FOXCONN HON HAI Precision Ind. Co., Ltd.
CCPBG - R&D Division

Title	VGA (POWER) 5 OF 8	
Size A3	Document Number (MS21-1-01)MainBoard (MBX-164) TYPE2	Rev 1.1
Date: Thursday, August 10, 2006	Sheet 25 of 78	

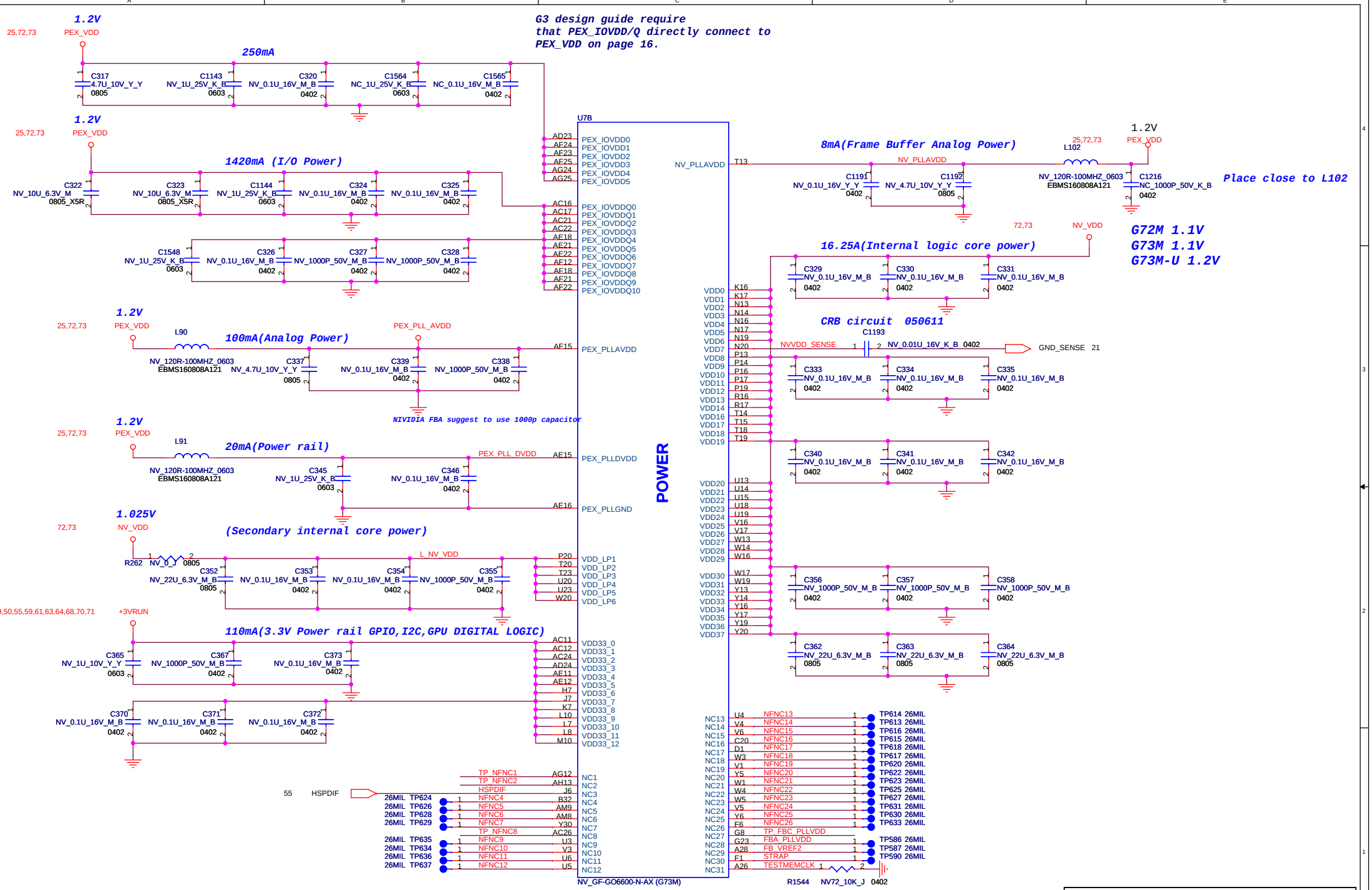
G3 design guide require that PEX_IOVDD/Q directly connect to PEX_VDD on page 16.
1.2V
25,72,73 PEX_VDD
250mA
C317 4.7U_10V_Y_Y 0805
C1143 NV_1U_25V_K_B 0603
C320 NV_0.1U_16V_M_B 0402
C1564 NC_1U_25V_K_B 0603
C1565 NC_0.1U_16V_M_B 0402
1.2V
25,72,73 PEX_VDD
1420mA (I/O Power)
C322 NV_10U_6.3V_M 0805_X5R
C323 NV_10U_6.3V_M 0805_X5R
C1144 NV_1U_25V_K_B 0603
C324 NV_0.1U_16V_M_B 0402
C325 NV_0.1U_16V_M_B 0402
C1548 NV_1U_25V_K_B 0603
C326 NV_0.1U_16V_M_B 0402
C327 NV_1000P_50V_M_B 0402
C328 NV_1000P_50V_M_B 0402
1.2V
25,72,73 PEX_VDD
L90
NV_120R-100MHZ_0603 EBMS160808A121
100mA(Analog Power)
PEX_PLL_AVDD
C337 NV_4.7U_10V_Y_Y 0805
C339 NV_0.1U_16V_M_B 0402
C338 NV_1000P_50V_M_B 0402
NIVIDIA FBA suggest to use 1000p capacitor
1.2V
25,72,73 PEX_VDD
L91
NV_120R-100MHZ_0603 EBMS160808A121
20mA(Power rail)
PEX_PLL_DVDD
C345 NV_1U_25V_K_B 0603
C346 NV_0.1U_16V_M_B 0402
1.025V
72,73 NV_VDD
(Secondary internal core power)
R262 NV_0_J 0805
L_NV_VDD
C352 NV_22U_6.3V_M_B 0805
C353 NV_0.1U_16V_M_B 0402
C354 NV_0.1U_16V_M_B 0402
C355 NV_1000P_50V_M_B 0402
+3VRUN
110mA(3.3V Power rail GPIO,I2C,GPU DIGITAL LOGIC)
C365 NV_1U_10V_Y_Y 0603
C367 NV_1000P_50V_M_B 0402
C373 NV_0.1U_16V_M_B 0402
C370 NV_0.1U_16V_M_B 0402
C371 NV_0.1U_16V_M_B 0402
C372 NV_0.1U_16V_M_B 0402
55 HSPDIF
26MIL TP624
26MIL TP626
26MIL TP628
26MIL TP629
26MIL TP635
26MIL TP634
26MIL TP636
26MIL TP637
TP_NFNC1
TP_NFNC2
HSPDIF
NFNC4
NFNC5
NFNC6
NFNC7
TP_NFNC8
NFNC9
NFNC10
NFNC11
NFNC12
U7B
POWER
PEX_IOVDD0
PEX_IOVDD1
PEX_IOVDD2
PEX_IOVDD3
PEX_IOVDD4
PEX_IOVDD5
PEX_IOVDDQ0
PEX_IOVDDQ1
PEX_IOVDDQ2
PEX_IOVDDQ3
PEX_IOVDDQ4
PEX_IOVDDQ5
PEX_IOVDDQ6
PEX_IOVDDQ7
PEX_IOVDDQ8
PEX_IOVDDQ9
PEX_IOVDDQ10
PEX_PLLAVDD
PEX_PLLDVDD
PEX_PLLGND
VDD_LP1
VDD_LP2
VDD_LP3
VDD_LP4
VDD_LP5
VDD_LP6
VDD33_0
VDD33_1
VDD33_2
VDD33_3
VDD33_4
VDD33_5
VDD33_6
VDD33_7
VDD33_8
VDD33_9
VDD33_10
VDD33_11
VDD33_12
NC1
NC2
NC3
NC4
NC5
NC6
NC7
NC8
NC9
NC10
NC11
NC12
NV_GF-GO6600-N-AX (G73M)
NV_PLLAVDD
8mA(Frame Buffer Analog Power)
25,72,73 PEX_VDD
1.2V
L102
NV_PLLAVDD
C1191 NV_0.1U_16V_Y_Y 0402
C1192 NV_4.7U_10V_Y_Y 0805
NV_120R-100MHZ_0603 EBMS160808A121
C1216 NC_1000P_50V_K_B 0402
Place close to L102
72,73 NV_VDD
16.25A(Internal logic core power)
G72M 1.1V
G73M 1.1V
G73M-U 1.2V
C329 NV_0.1U_16V_M_B 0402
C330 NV_0.1U_16V_M_B 0402
C331 NV_0.1U_16V_M_B 0402
CRB circuit 050611
C1193
NVVDD_SENSE
NV_0.01U_16V_K_B 0402
GND_SENSE 21
C333 NV_0.1U_16V_M_B 0402
C334 NV_0.1U_16V_M_B 0402
C335 NV_0.1U_16V_M_B 0402
C340 NV_0.1U_16V_M_B 0402
C341 NV_0.1U_16V_M_B 0402
C342 NV_0.1U_16V_M_B 0402
C356 NV_1000P_50V_M_B 0402
C357 NV_1000P_50V_M_B 0402
C358 NV_1000P_50V_M_B 0402
C362 NV_22U_6.3V_M_B 0805
C363 NV_22U_6.3V_M_B 0805
C364 NV_22U_6.3V_M_B 0805
NFNC13
NFNC14
NFNC15
NFNC16
NFNC17
NFNC18
NFNC19
NFNC20
NFNC21
NFNC22
NFNC23
NFNC24
NFNC25
NFNC26
TP_FBC_PLLVDD
FBA_PLLVDD
FB_VREF2
STRAP
TESTMEMCLK
TP614 26MIL
TP613 26MIL
TP616 26MIL
TP615 26MIL
TP618 26MIL
TP617 26MIL
TP620 26MIL
TP622 26MIL
TP623 26MIL
TP625 26MIL
TP627 26MIL
TP631 26MIL
TP630 26MIL
TP633 26MIL
TP586 26MIL
TP587 26MIL
TP590 26MIL
R1544 NV72_10K_J 0402
G73M Pin A26-NC
G72M Pin A26 need stuff R305 10K
FOXCONN
HON HAI Precision Ind. Co., Ltd.
CCPBG - R&D Division
Title VGA (GDDR/I2C/ROM) 4 OF 8
Size A3
Document Number (MS21-1-01)MainBoard (MBX-164) TYPE2
Rev 1.1
Date: Thursday, August 10, 2006
Sheet 26 of 78

Decoupling for Tright MEMORY

Place around the MEM

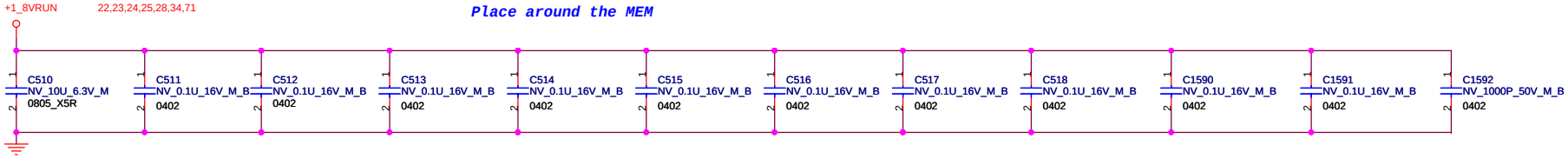

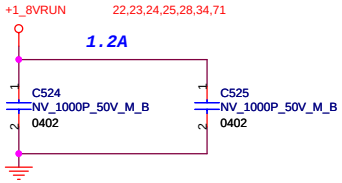

Decoupling for Tleft MEMORY

Place around the MEM

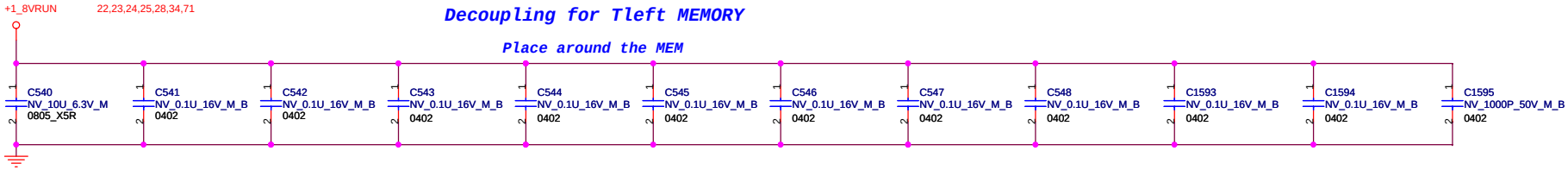

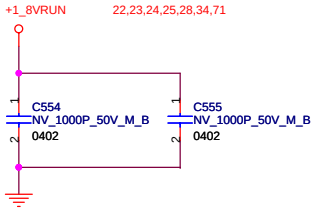

FOXCONN	HON HAI Precision Ind. Co., Ltd. CCPBG - R&D Division	
Title	VRAM (GDDR) 3 OF 4	
Size A3	Document Number (MS21-1-01)MainBoard (MBX-164) TYPE2	Rev 1.1
Date: Thursday, August 10, 2006	Sheet 27 of 78	

Decoupling for Bright MEMORY

Place around the MEM

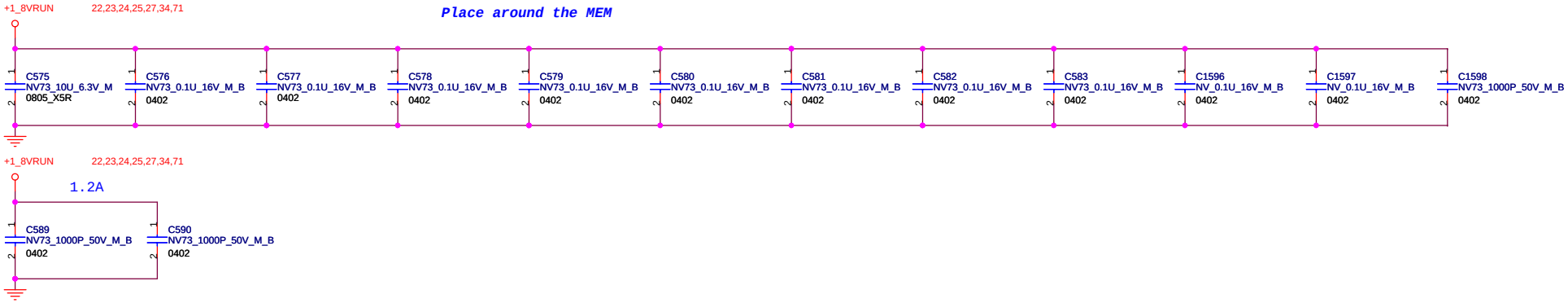

Decoupling for Bleft MEMORY

Place around the MEM

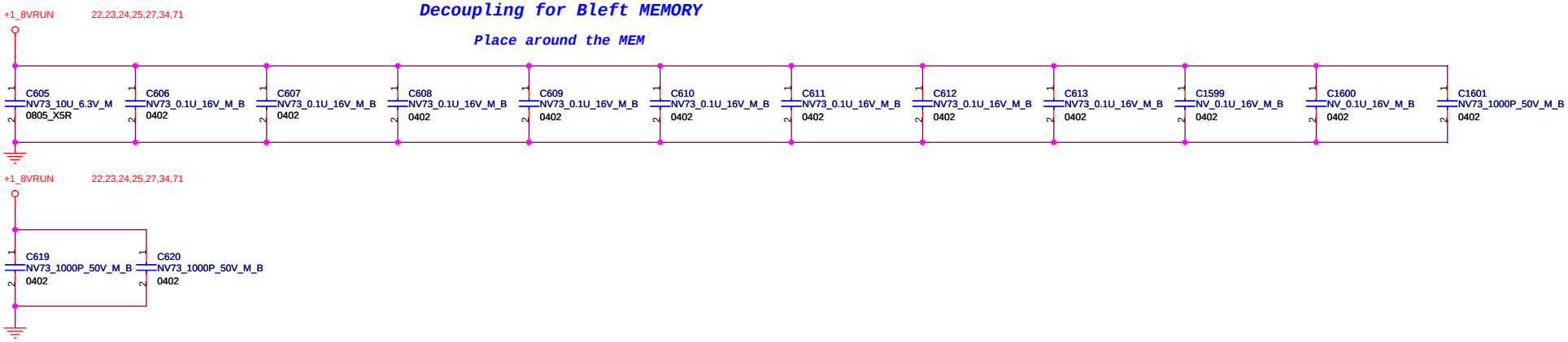

FOXCONN	HON HAI Precision Ind. Co., Ltd. CCPBG - R&D Division	
Title	VRAM (POWERBYPASS) 4 OF 4	
Size A3	Document Number (MS21-1-01)MainBoard (MBX-164) TYPE2	Rev 1.1
Date: Thursday, August 10, 2006	Sheet 28 of 78	

S-VIDEO ANALOG SWITCH

H : S-VIDEO&CVBS
L : PORT REPLICATOR

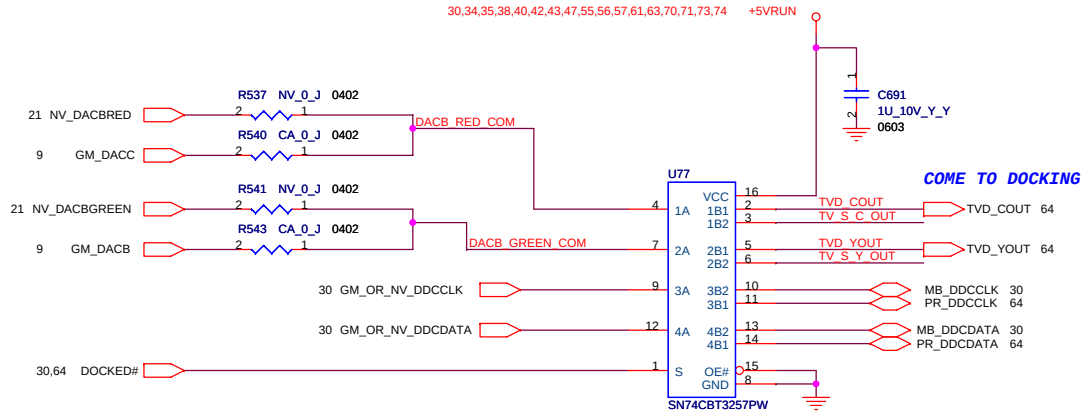

COME TO DOCKING

S-VIDEO

These compoent close to S-Video connector within 700 mil

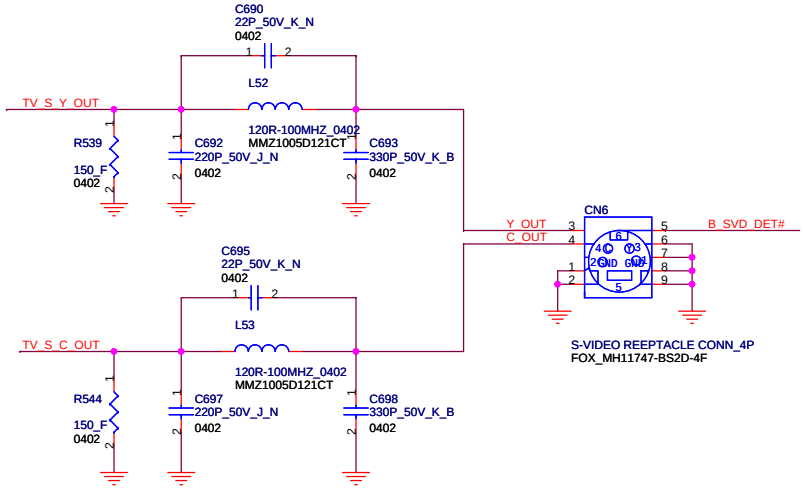

2006/8/7
change D60,D61,D81 Value from NV to Normal

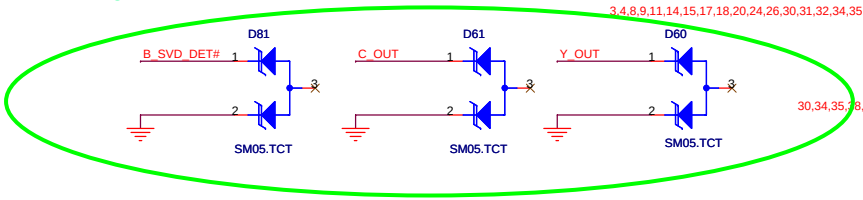

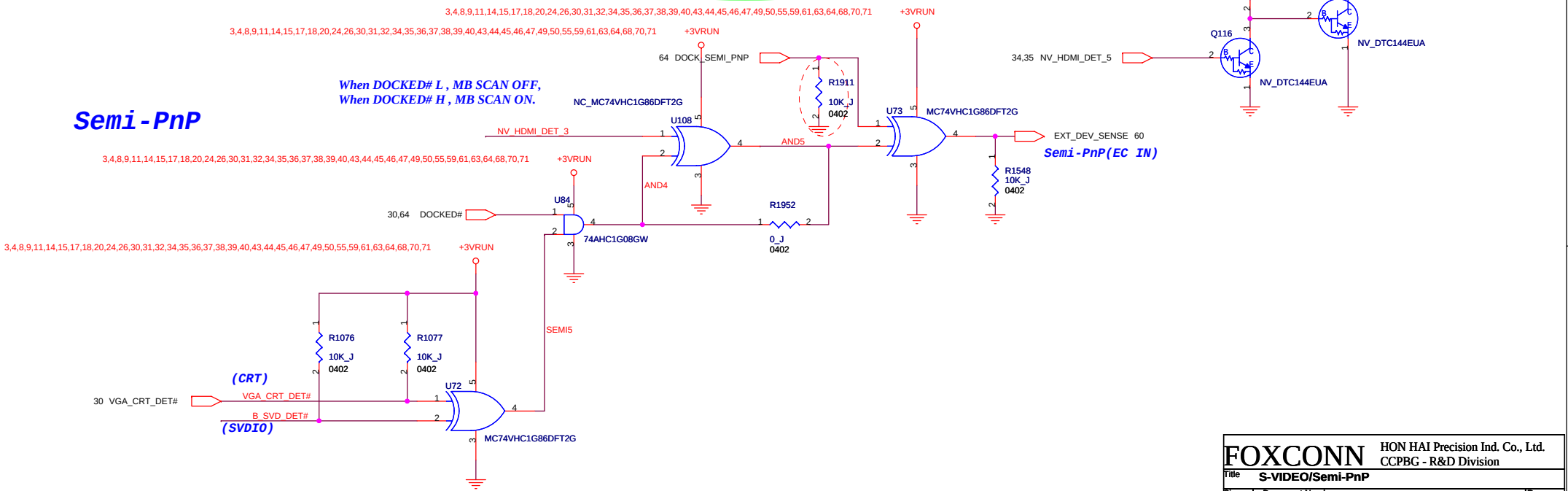

When DOCKED# L , MB SCAN OFF,
When DOCKED# H , MB SCAN ON.

Semi-PnP

FOXCONN	HON HAI Precision Ind. Co., Ltd. CCPBG - R&D Division	
Title	S-VIDEO/Semi-PnP	
Size A3	Document Number (MS21-1-01)MainBoard (MBX-164) TYPE2	Rev 1.1
Date: Thursday, August 10, 2006	Sheet 29 of 78	

CRT ANALOG SWITCH

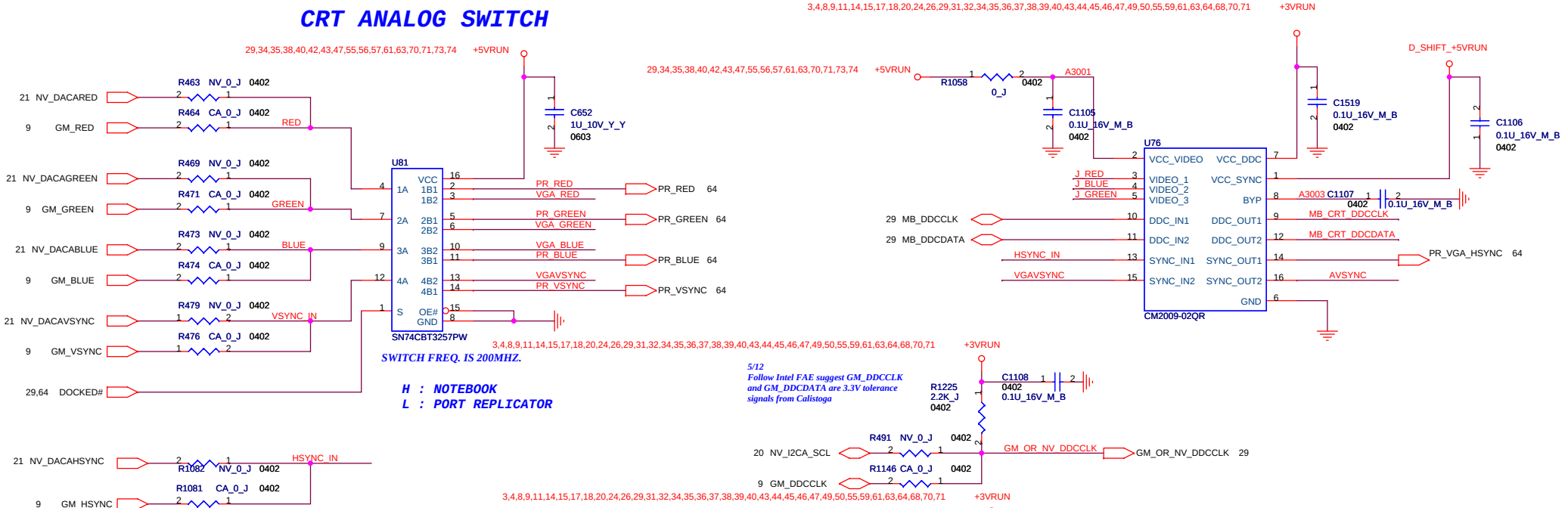

CRT CONNECTOR

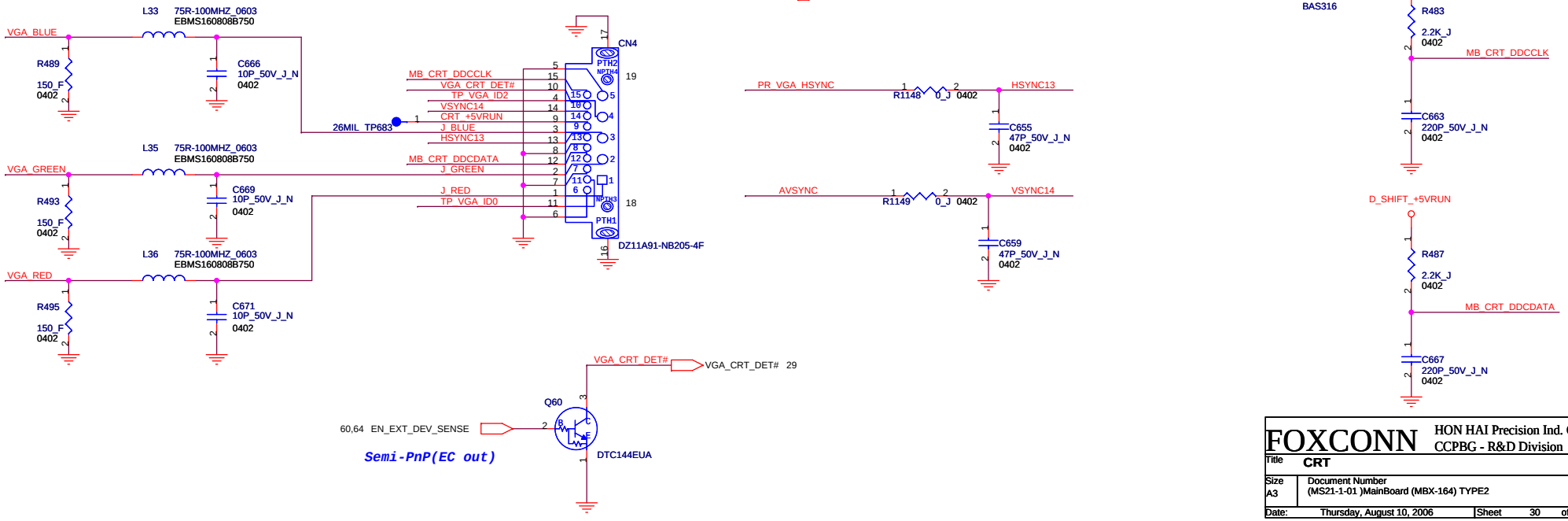

FOXCONN	HON HAI Precision Ind. Co., Ltd. CCPBG - R&D Division	
Title	CRT	
Size A3	Document Number (MS21-1-01)MainBoard (MBX-164) TYPE2	Rev 1.1
Date: Thursday, August 10, 2006	Sheet 30 of 78	

LVDS

Group1 | Group2

2006/6/26
(Del inverter boost circuit , after change ,
the inverter circuit is the same with MS20 MP)
Detail change list
Delete PR426&PR427 and change
C604-1,C1557-1,C1558-1,CN49pin1,pin2
net name INVERTER_VCC to net DCBATOUT.

21 NV_ODD_CLKIN- / 21 NV_ODD_CLKIN+ — 0404_4P2R RP76 (NV_0) — ODD_CLKIN- / ODD_CLKIN+ — RP77 (CA_0) — GM_ODD_CLKIN- 9 / GM_ODD_CLKIN+ 9
21 NV_ODD_RXIN0- / 21 NV_ODD_RXIN0+ — RP78 (NV_0) — ODD_RXIN0- / ODD_RXIN0+ — RP79 (CA_0) — GM_ODD_RXIN0- 9 / GM_ODD_RXIN0+ 9
21 NV_ODD_RXIN1- / 21 NV_ODD_RXIN1+ — RP80 (NV_0) — ODD_RXIN1- / ODD_RXIN1+ — RP81 (CA_0) — GM_ODD_RXIN1- 9 / GM_ODD_RXIN1+ 9
21 NV_ODD_RXIN2- / 21 NV_ODD_RXIN2+ — RP82 (NV_0) — ODD_RXIN2- / ODD_RXIN2+ — RP83 (CA_0) — GM_ODD_RXIN2- 9 / GM_ODD_RXIN2+ 9
21 NV_EVEN_CLKIN- / 21 NV_EVEN_CLKIN+ — RP84 (NV_0) — EVEN_CLKIN- / EVEN_CLKIN+ — RP85 (CA_0) — GM_EVEN_CLKIN- 9 / GM_EVEN_CLKIN+ 9
21 NV_EVEN_RXIN0- / 21 NV_EVEN_RXIN0+ — RP86 (NV_0) — EVEN_RXIN0- / EVEN_RXIN0+ — RP87 (CA_0) — GM_EVEN_RXIN0- 9 / GM_EVEN_RXIN0+ 9
21 NV_EVEN_RXIN1- / 21 NV_EVEN_RXIN1+ — RP88 (NV_0) — EVEN_RXIN1- / EVEN_RXIN1+ — RP89 (CA_0) — GM_EVEN_RXIN1- 9 / GM_EVEN_RXIN1+ 9
21 NV_EVEN_RXIN2- / 21 NV_EVEN_RXIN2+ — RP90 (NV_0) — EVEN_RXIN2- / EVEN_RXIN2+ — RP91 (CA_0) — GM_EVEN_RXIN2- 9 / GM_EVEN_RXIN2+ 9

66,67,68,69,70,71,72,73 DCBATOUT
C1557 NC_0.1U_50V_K_B 0603
C1558 1U_25V_Y 0805_Y5V
C640 0.1U_50V_K_B 0603

Place C640 and C1558 close to CN49.

66,67,68,69,70,71,72,73 DCBATOUT
2A
CN49 — B TO B HEADER CONN_6P FOX_HS8106E
INV_ENABLE
INV_BRADJ

3,4,8,9,11,14,15,17,18,20,24,26,29,30,32,34,35,36,37,38,39,40,43,44,45,46,47,49,50,55,59,61,63,64,68,70,71
+3VRUN
U106 74AHC1G08GW
39 INV_EN_EC — INV_EN_EC — BRADJPWM_LPF
NB_BRADJ — R1268 CA_0_J 0402
20 NV_BRADJ — R1269 NV_0_J 0402
R1549 10K_J 0402

U106,U15,U16 can use ON (MC74VHC1G08DFT2G)
H.H. PN:14-MC74VHC-1G04

INVERTER CONNECTOR

LVDS CONNECTOR

LCDVCC
37 LVDS_GPIO
GAMMA_CTRL
EVEN_RXIN0+ / EVEN_RXIN0-
EVEN_RXIN1+ / EVEN_RXIN1-
EVEN_RXIN2- / EVEN_RXIN2+
EVEN_CLKIN+ / EVEN_CLKIN-
ODD_CLKIN+ / ODD_CLKIN-
ODD_RXIN2+ / ODD_RXIN2-
ODD_RXIN1+ / ODD_RXIN1-
ODD_RXIN0+ / ODD_RXIN0-
CN3 — FPC RECEPTCAL CONN_30P — FOX_GS12301-1011A-9F

LCDVCC
R1937 NC_0_J 0402
GAMMA_CTRL
R1938 0_J 0402

3,4,8,9,11,14,15,17,18,20,24,26,29,30,32,34,35,36,37,38,39,40,43,44,45,46,47,49,50,55,59,61,63,64,68,70,71
+3VRUN
U16 74AHC1G08GW
60,63 LIDIN#
20 NV_INV_EN
9 GM_INV_EN (3.3V tolerant)
R458 CA_100K_J 0402
R1724 CA_0_J 0402

3,4,8,9,11,14,15,17,18,20,24,26,29,30,32,34,35,36,37,38,39,40,43,44,45,46,47,49,50,55,59,61,63,64,68,70,71
+3VRUN
U15 74AHC1G08GW
39 INV_EN_EC — INV_EN_EC — INV_ENABLE — INV_ENABLE 60,74
R1550 10K_J 0402

LCDVCC
C649 4.7U_10V_Y_Y 0805
C650 0.1U_16V_Y_Y 0402
C1614 0.1U_16V_Y_Y 0402

Place C650 close to CN3

PANEL ID

SW1 HDS404-E_SW-SLIDE
LCDID0 39
LCDID1 39
LCDID2 39
FAN_SEL 60

FAN_SEL:
H: Foxconn FAN
L: MOR cooling unit

3,4,8,9,11,14,15,17,18,20,24,26,29,30,32,34,35,36,37,38,39,40,43,44,45,46,47,49,50,55,59,61,63,64,68,70,71
+3VRUN
R459 2K_J 0402

Current limit is from 1.1A to 2.1A.

3,4,8,9,11,14,15,17,18,20,24,26,29,30,32,34,35,36,37,38,39,40,43,44,45,46,47,49,50,55,59,61,63,64,68,70,71
+3VRUN
Q10 CA_DTC144EUA
9 GM_LCDVCC_EN
20 NV_LCDVCC_EN#
C647 0.1U_16V_M_B 0402
U17 G548B2P1U
C1151 0402 NV_0.1U_16V_Y_Y

LCDVCC
R461 62_J 0805

DISCHARGE

Q135 MMC2301
R1857 47K_J 0402

+3VRUN
3,4,8,9,11,14,15,17,18,20,24,26,29,30,32,34,35,36,37,38,39,40,43,44,45,46,47,49,50,55,59,61,63,64,68,70,71
R1856 4.7K_J 0402
Q141 MMBT3904
R1892 0402 10K_J
NV_LCDVCC_EN# 20

Type	WXGA+	WXGA+	WUXGA
Size	17" wide	17" wide	17" wide
Vender	LG.PHILIPS	LG.PHILIPS	SHARP
	LP171WP7-TLA1	LP171WX2-A4K3	LQ170M1LA04
Device Name	2 Lamps	1 Lamps	2 Lamps
Panel ID Check[3..0]	0001	0010	0100

FOXCONN — HON HAI Precision Ind. Co., Ltd. CCPBG - R&D Division

Title: LVDS		
Size: A3	Document Number: (MS21-1-01)MainBoard (MBX-164) TYPE2	Rev: 1.1
Date: Thursday, August 10, 2006	Sheet 31 of 78	

Special mini stereo jack

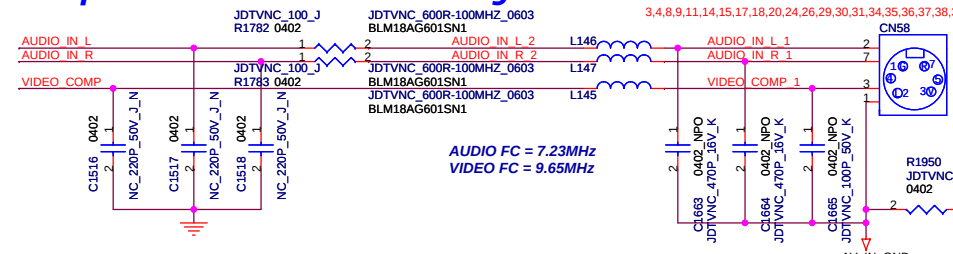

AUDIO FC = 7.23MHz
VIDEO FC = 9.65MHz

040406 Modify BOM roul
(1)Mini PCI socket circuit group change part neam from TV_ to normal.
(2)Special mini stereo jack and S-VIDEO in group change part name from TV_ to JDTVNC_
(JP digital tuner sku & No tuner SKU NOT stuff)

S-VIDEO IN

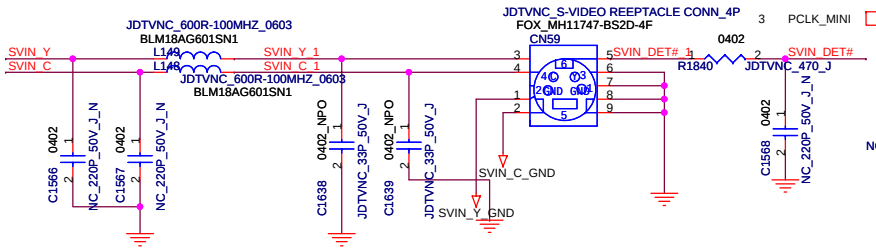

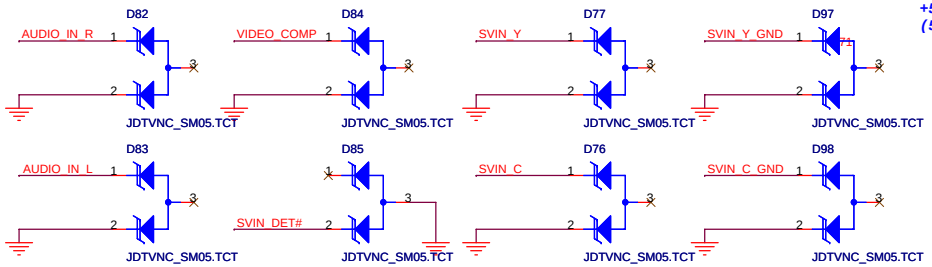

TV TUNER CONN

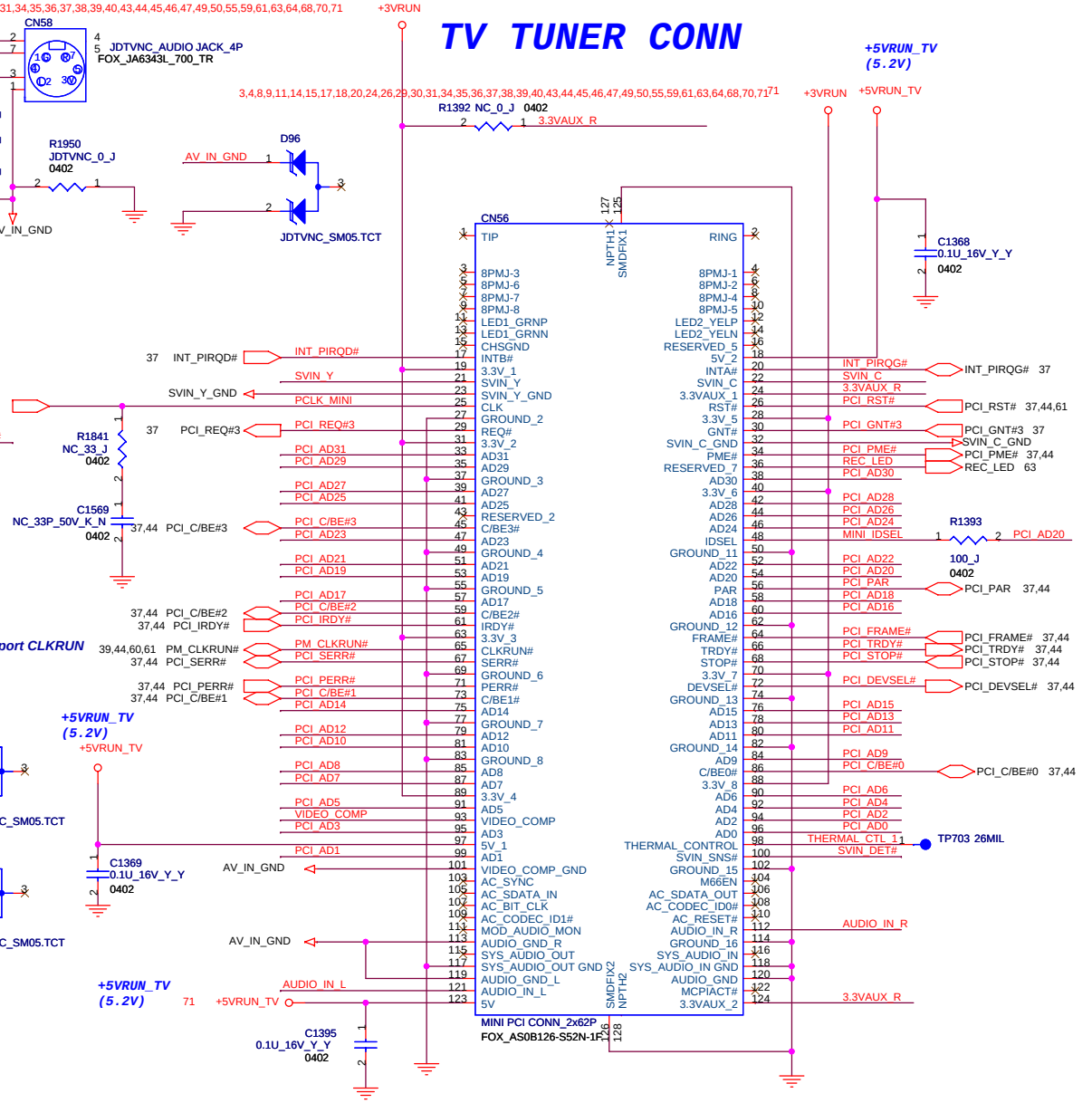

TV-TUNER not support CLKRUN

B-CAS connentor (Close to TV Tuner)

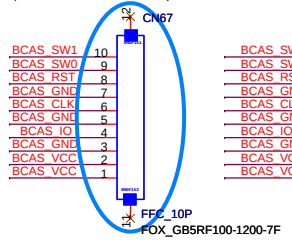

FFC CONNECT TO TV TUNER BOARD (FOR JP DIAGITAL)

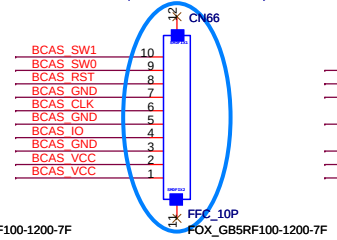

BFT Test Pad

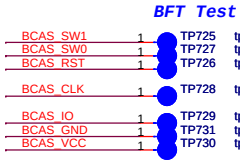

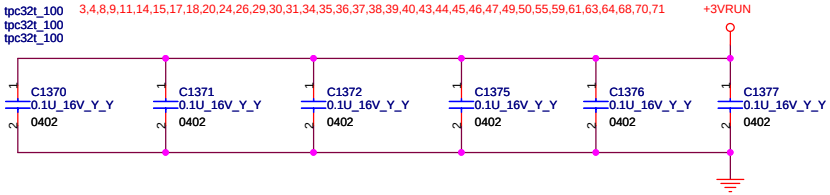

CN66,CN67 Change from MOLEX to FOXCONN

FOXCONN	HON HAI PRECISION IND. CO., LTD. CPBG - R&D Division	
Title	MINI-PCI CONN.	
Size A3	Document Number (MS21-1-01)MainBoard (MBX-164) TYPE2	Rev 1.1
Date: Thursday, August 10, 2006	Sheet 32 of 78	

Hot plug behavior & I2C ARRANGEMENT block diagram

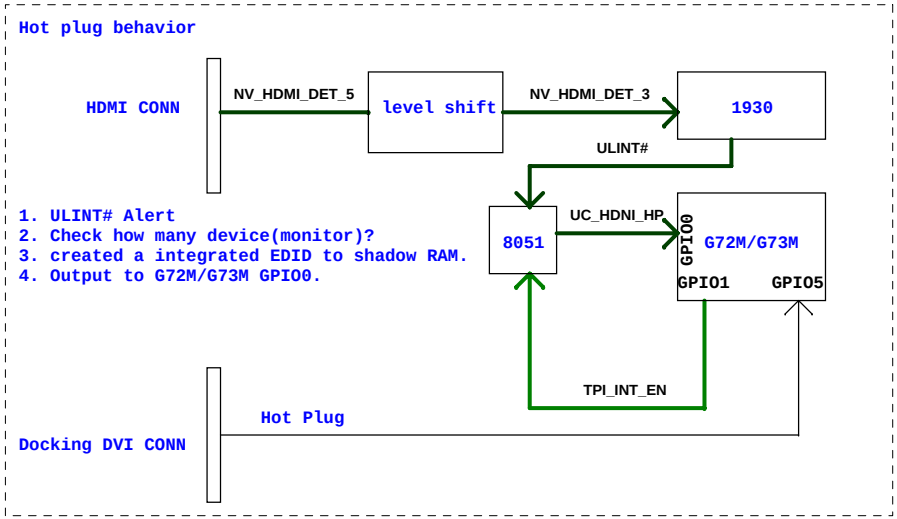

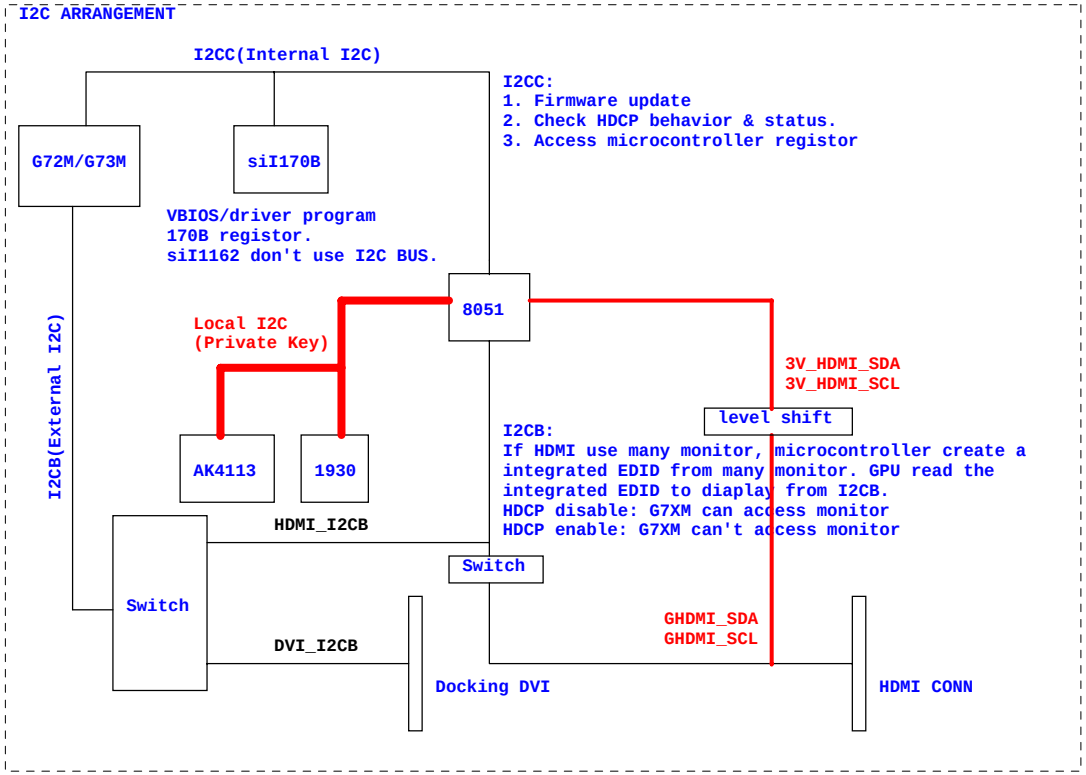

Title	Hot plug behavior & I2C ARRANGEMENT block diagram	
Size A3	Document Number (MS21-1-01)MainBoard (MBX-164) TYPE2	Rev 1.1
Date: Thursday, August 10, 2006	Sheet 33 of 78	

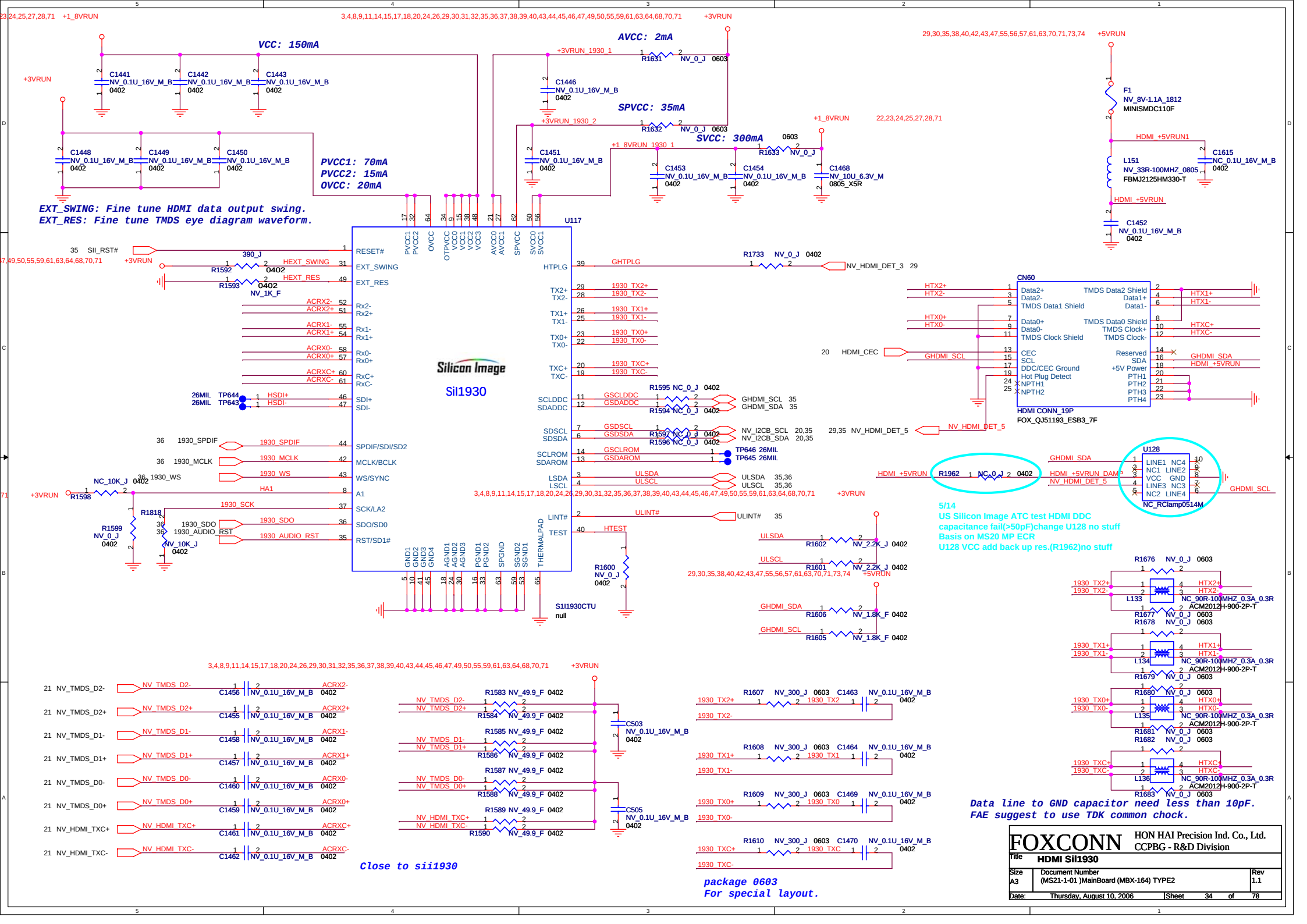
VCC: 150mA
AVCC: 2mA
SPVCC: 35mA
SVCC: 300mA
PVCC1: 70mA
PVCC2: 15mA
OVCC: 20mA
EXT_SWING: Fine tune HDMI data output swing.
EXT_RES: Fine tune TMDS eye diagram waveform.
U117
Silicon Image
Sil1930
S1I1930CTU
null
CN60
HDMI CONN_19P
FOX_QJ51193_ESB3_7F
U128
NC_RClamp0514M
5/14
US Silicon Image ATC test HDMI DDC
capacitance fail(>50pF)change U128 no stuff
Basis on MS20 MP ECR
U128 VCC add back up res.(R1962)no stuff
Close to sii1930
package 0603
For special layout.
Data line to GND capacitor need less than 10pF.
FAE suggest to use TDK common chock.
FOXCONN
HON HAI Precision Ind. Co., Ltd.
CCPBG - R&D Division
Title HDMI Sil1930
Size A3
Document Number (MS21-1-01)MainBoard (MBX-164) TYPE2
Rev 1.1
Date: Thursday, August 10, 2006
Sheet 34 of 78

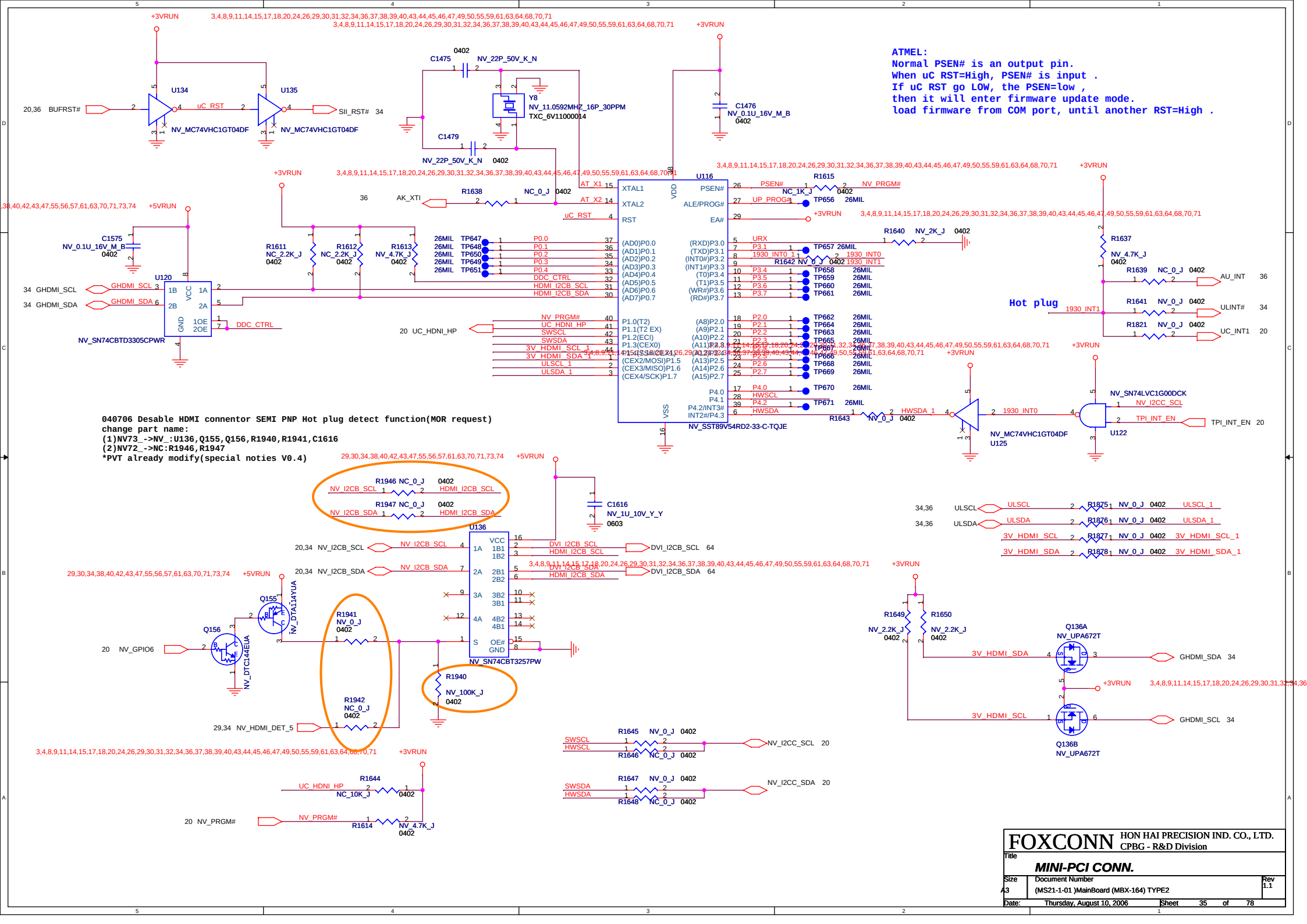
ATMEL:
Normal PSEN# is an output pin.
When uC RST=High, PSEN# is input .
If uC RST go LOW, the PSEN=low ,
then it will enter firmware update mode.
load firmware from COM port, until another RST=High .
Hot plug
040706 Desable HDMI connentor SEMI PNP Hot plug detect function(MOR request)
change part name:
(1)NV73_->NV_:U136,Q155,Q156,R1940,R1941,C1616
(2)NV72_->NC:R1946,R1947
*PVT already modify(special noties V0.4)
U116
NV_SST89V54RD2-33-C-TQJE
U120
NV_SN74CBTD3305CPWR
U136
NV_SN74CBT3257PW
U125
NV_MC74VHC1GT04DF
U122
NV_SN74LVC1G00DCK
Y8
NV_11.0592MHZ_16P_30PPM
TXC_6V11000014
Q155
NV_DTA114YUA
Q156
NV_DTC144EUA
Q136A
NV_UPA672T
Q136B
NV_UPA672T
FOXCONN
HON HAI PRECISION IND. CO., LTD.
CPBG - R&D Division
Title
MINI-PCI CONN.
Size
A3
Document Number
(MS21-1-01)MainBoard (MBX-164) TYPE2
Rev
1.1
Date:
Thursday, August 10, 2006
Sheet
35
of
78

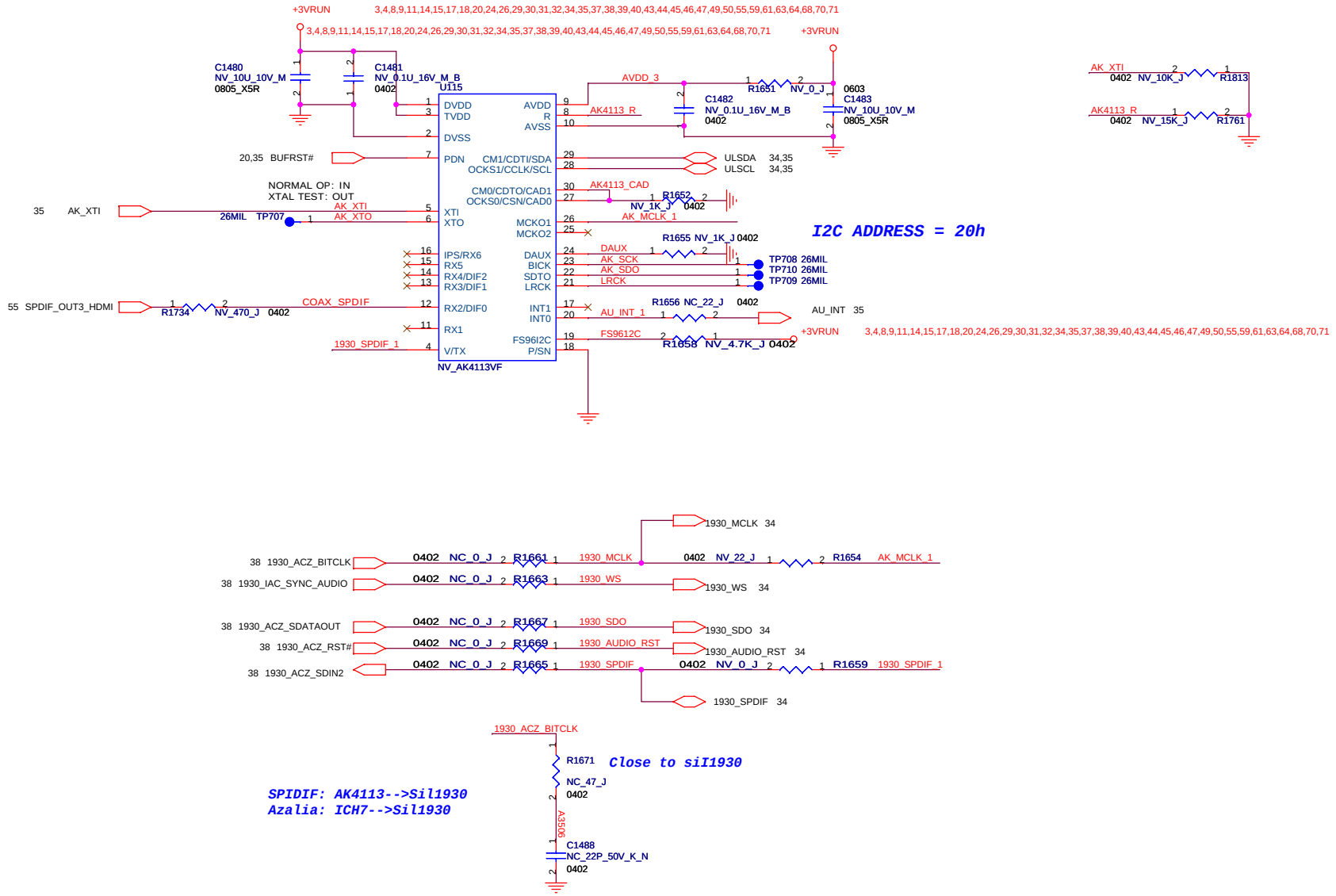

FOXCONN	HON HAI PRECISION IND. CO., LTD. CPBG - R&D Division	
Title	HDMI UCODEC	
Size A3	Document Number (MS21-1-01)MainBoard (MBX-164) TYPE2	Rev 1.1
Date: Thursday, August 10, 2006	Sheet 36 of 78	

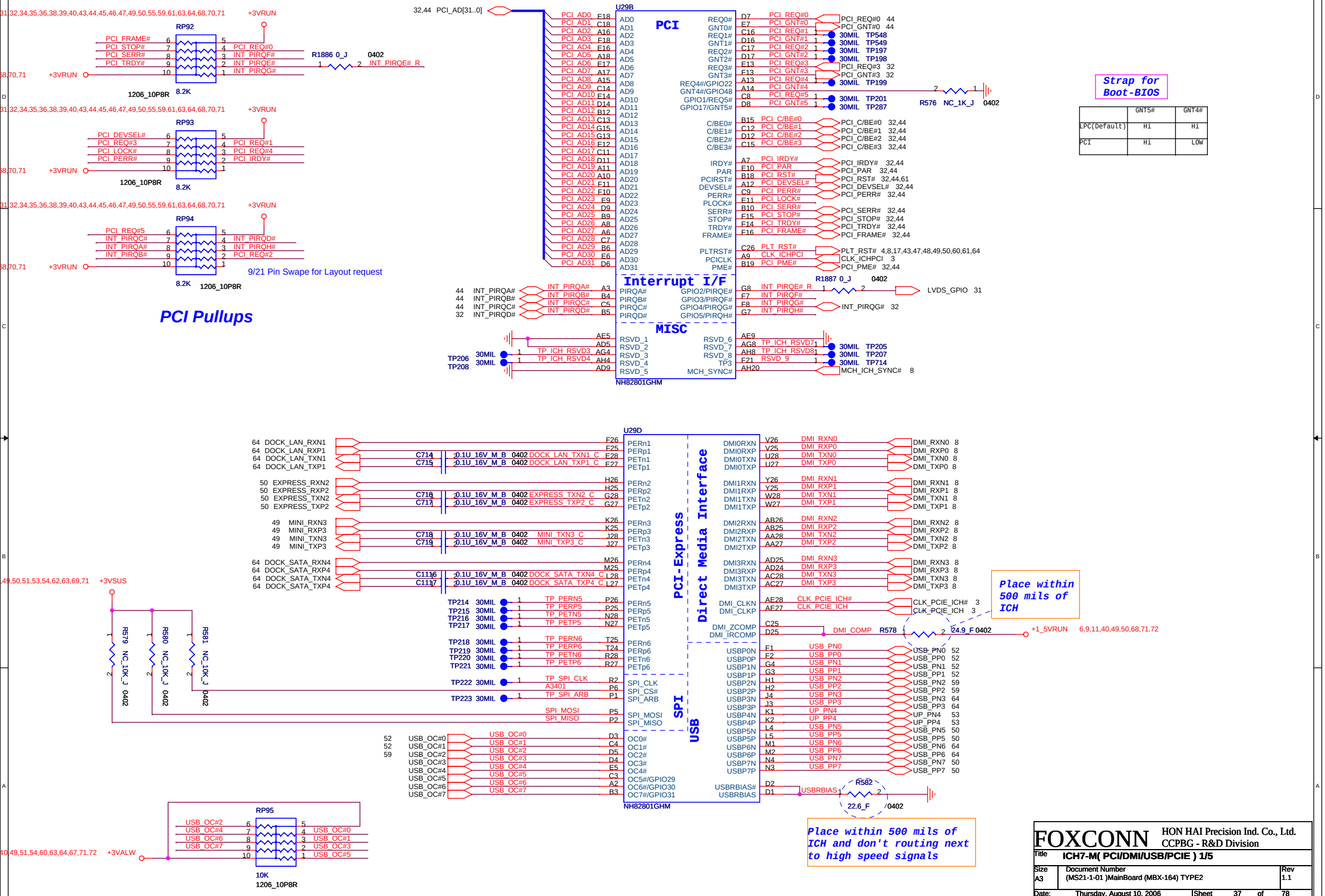
PCI Pullups
9/21 Pin Swape for Layout request
RP92
RP93
RP94
RP95
1206_10P8R
8.2K
10K
+3VRUN
+3VSUS
+3VALW
+1_5VRUN
U29B
PCI
Interrupt I/F
MISC
NH82801GHM
U29D
PCI-Express
Direct Media Interface
SPI
USB
R1886 0_J 0402
R1887 0_J 0402
R576 NC_1K_J 0402
R578 24.9_F 0402
R582 22.6_F 0402
R579 NC_10K_J 0402
R580 NC_10K_J 0402
R581 NC_10K_J 0402
C714 0.1U_16V_M_B 0402
C715 0.1U_16V_M_B 0402
C716 0.1U_16V_M_B 0402
C717 0.1U_16V_M_B 0402
C718 0.1U_16V_M_B 0402
C719 0.1U_16V_M_B 0402
C1116 0.1U_16V_M_B 0402
C1117 0.1U_16V_M_B 0402
Strap for Boot-BIOS
LPC(Default) GNT5# H1 GNT4# H1
PCI GNT5# H1 GNT4# LOW
Place within 500 mils of ICH
Place within 500 mils of ICH and don't routing next to high speed signals
FOXCONN
HON HAI Precision Ind. Co., Ltd.
CCPBG - R&D Division
Title ICH7-M(PCI/DMI/USB/PCIE) 1/5
Size A3
Document Number (MS21-1-01)MainBoard (MBX-164) TYPE2
Rev 1.1
Date: Thursday, August 10, 2006
Sheet 37 of 78

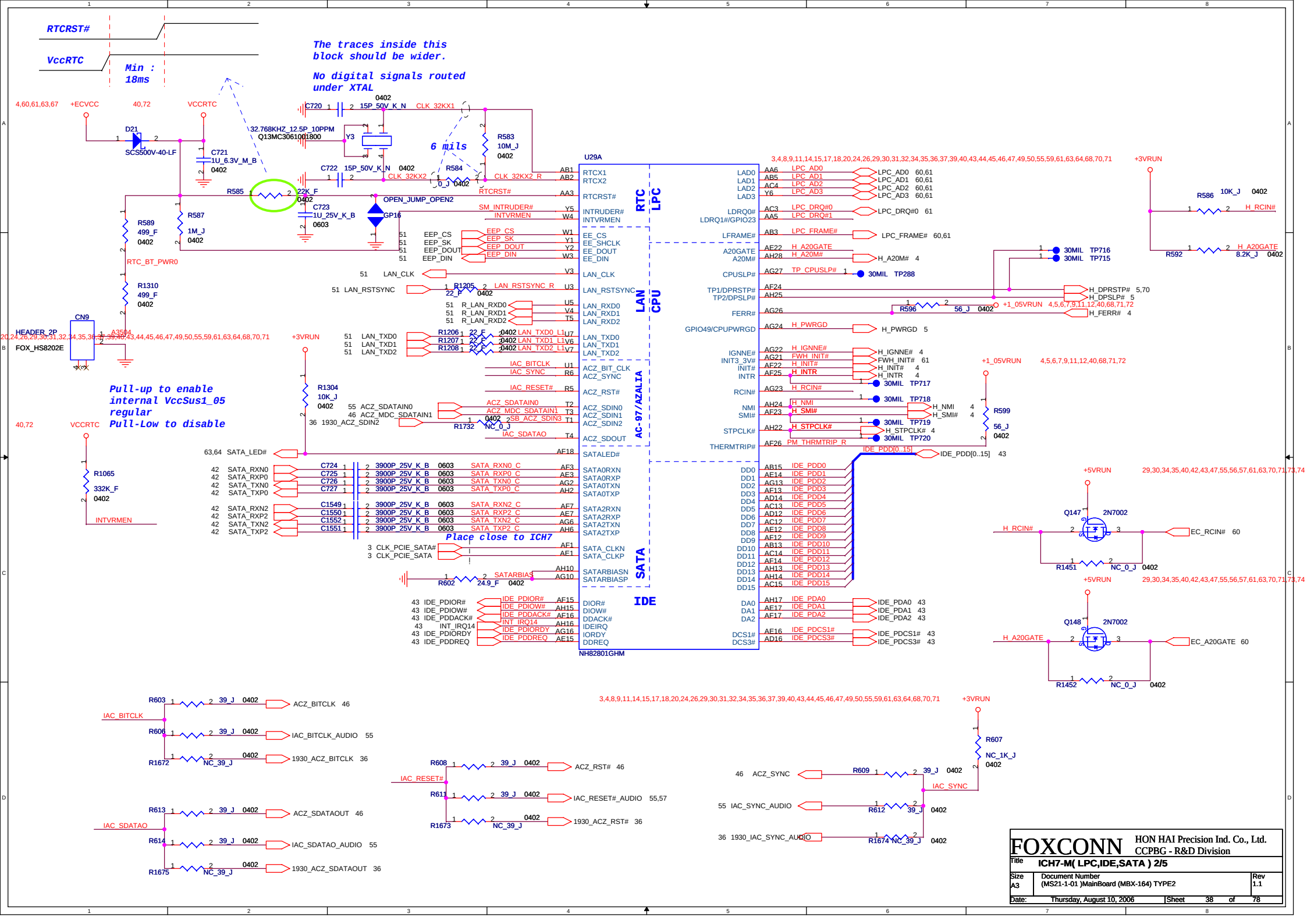
RTCRST#
VccRTC
Min : 18ms
The traces inside this block should be wider.
No digital signals routed under XTAL
6 mils
Pull-up to enable internal VccSus1_05 regular
Pull-Low to disable
Place close to ICH7
U29A
NH82801GHM
RTC
LPC
LAN
CPU
AC-97/AZALIA
SATA
IDE
FOXCONN
HON HAI Precision Ind. Co., Ltd.
CCPBG - R&D Division
Title
ICH7-M(LPC,IDE,SATA) 2/5
Size A3
Document Number (MS21-1-01)MainBoard (MBX-164) TYPE2
Rev 1.1
Date: Thursday, August 10, 2006
Sheet 38 of 78

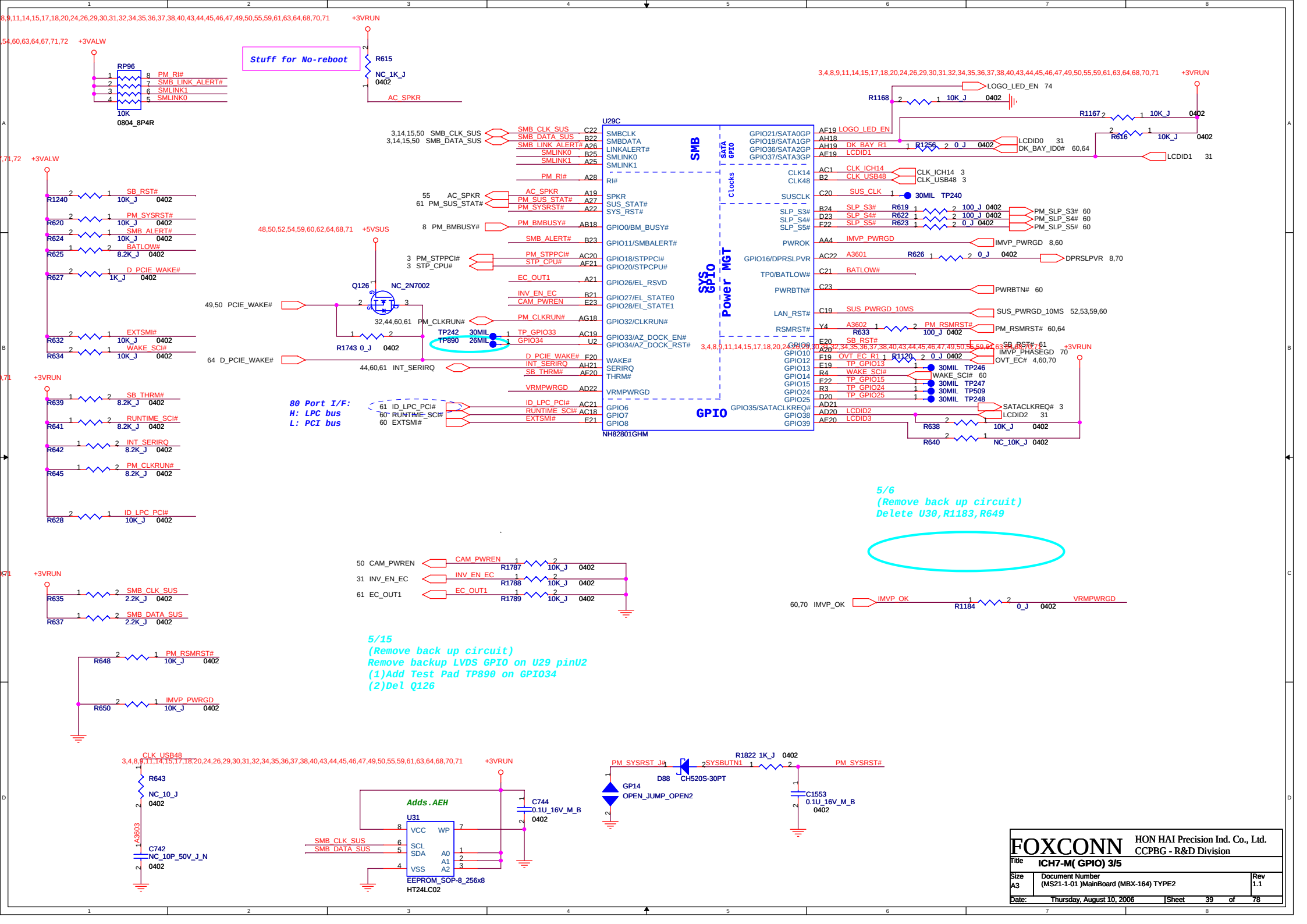

FOXCONN	HON HAI Precision Ind. Co., Ltd. CCPBG - R&D Division
Title	ICH7-M(GPIO) 3/5
Size A3	Document Number (MS21-1-01)MainBoard (MBX-164) TYPE2
Rev	1.1
Date: Thursday, August 10, 2006	Sheet 39 of 78

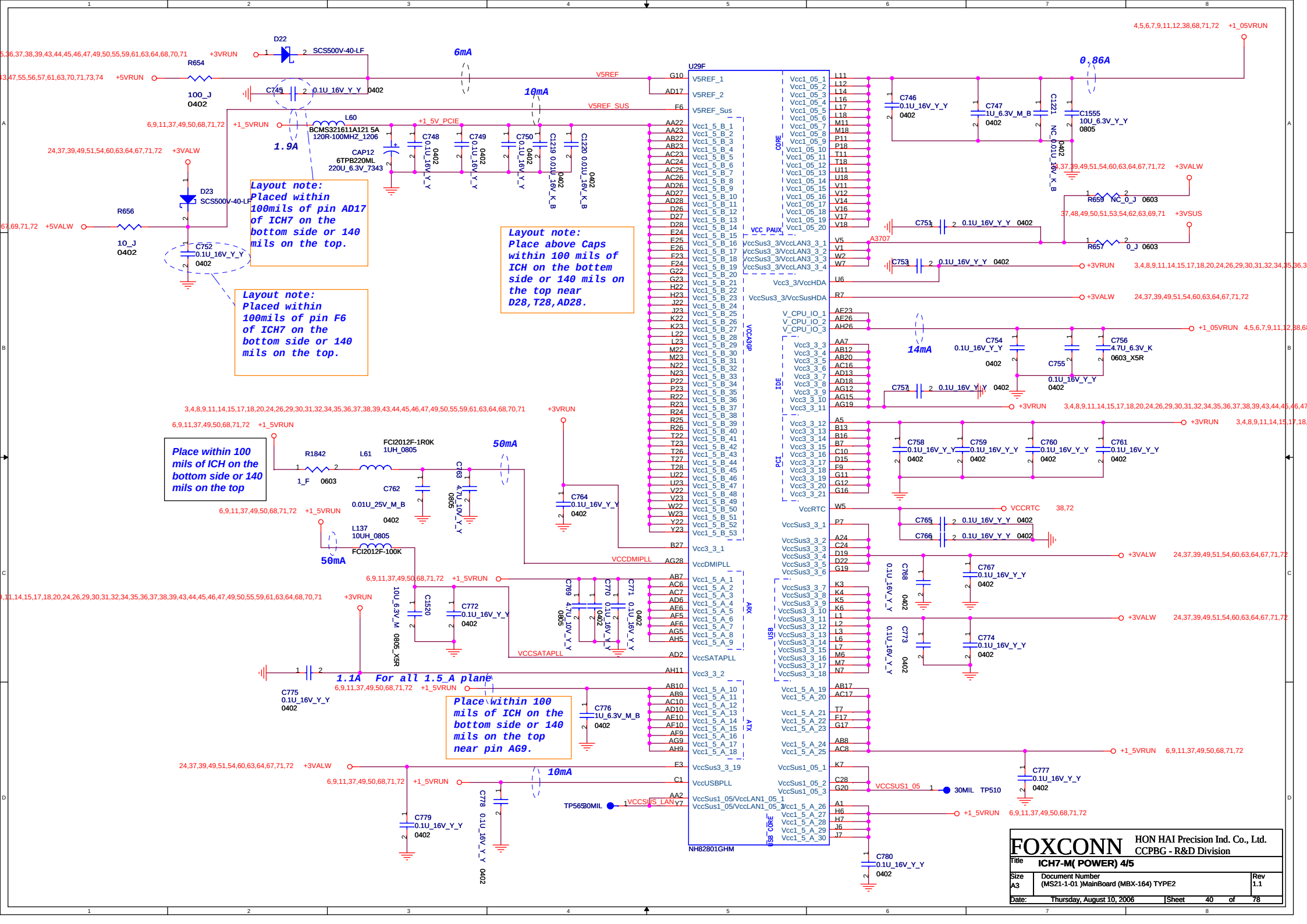
U29F
NH82801GHM
Layout note: Placed within 100mils of pin AD17 of ICH7 on the bottom side or 140 mils on the top.
Layout note: Place above Caps within 100 mils of ICH on the bottom side or 140 mils on the top near D28,T28,AD28.
Layout note: Placed within 100mils of pin F6 of ICH7 on the bottom side or 140 mils on the top.
Place within 100 mils of ICH on the bottom side or 140 mils on the top
Place within 100 mils of ICH on the bottom side or 140 mils on the top near pin AG9.
1.9A
6mA
10mA
0.86A
14mA
50mA
1.1A For all 1.5_A plane
FOXCONN
HON HAI Precision Ind. Co., Ltd.
CCPBG - R&D Division
Title ICH7-M(POWER) 4/5
Size A3
Document Number (MS21-1-01)MainBoard (MBX-164) TYPE2
Rev 1.1
Date: Thursday, August 10, 2006
Sheet 40 of 78

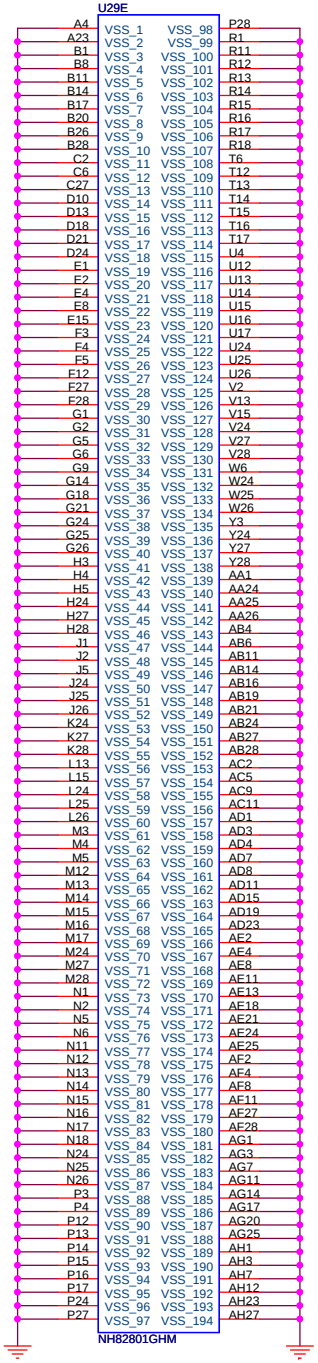

FOXCONN	HON HAI Precision Ind. Co., Ltd. CCPBG - R&D Division	
Title	ICH7-M(GND) 5/5	
Size A3	Document Number (MS21-1-01)MainBoard (MBX-164) TYPE2	Rev 1.1
Date: Thursday, August 10, 2006	Sheet 41 of 78	

5/6
For power droup cause 0.16V voltage loss Issue
(1)F7,F8,F19,F20 no stuff
(2)Co-layout normal open gap GP17~GP18 with fuse
5/27 Delete SATA HDD Fuse backup circuit
(1)Remove F7,F8,F19,F20 Pad
(2)Remove GP17~GP18 open gap

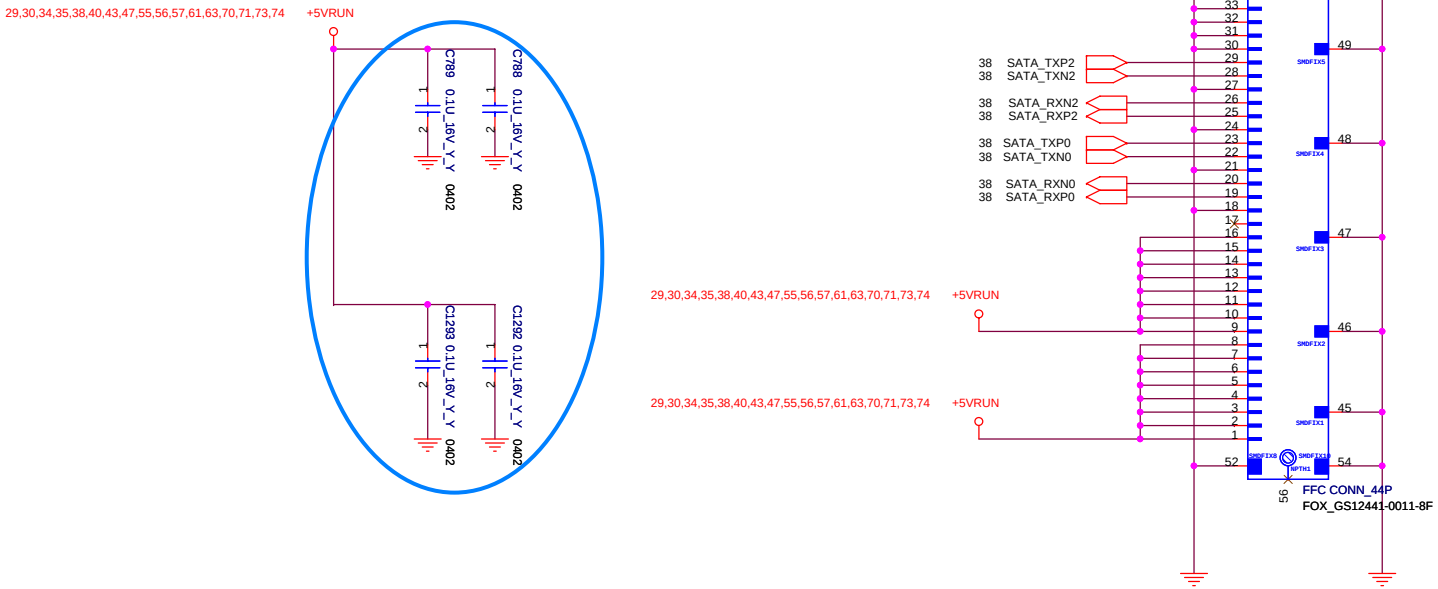

FOXCONN	HON HAI Precision Ind. Co., Ltd. CCPBG - R&D Division	
Title	SATA HDD RAID	
Size A3	Document Number (MS21-1-01)MainBoard (MBX-164) TYPE2	Rev 1.1
Date: Thursday, August 10, 2006	Sheet 42 of 78	

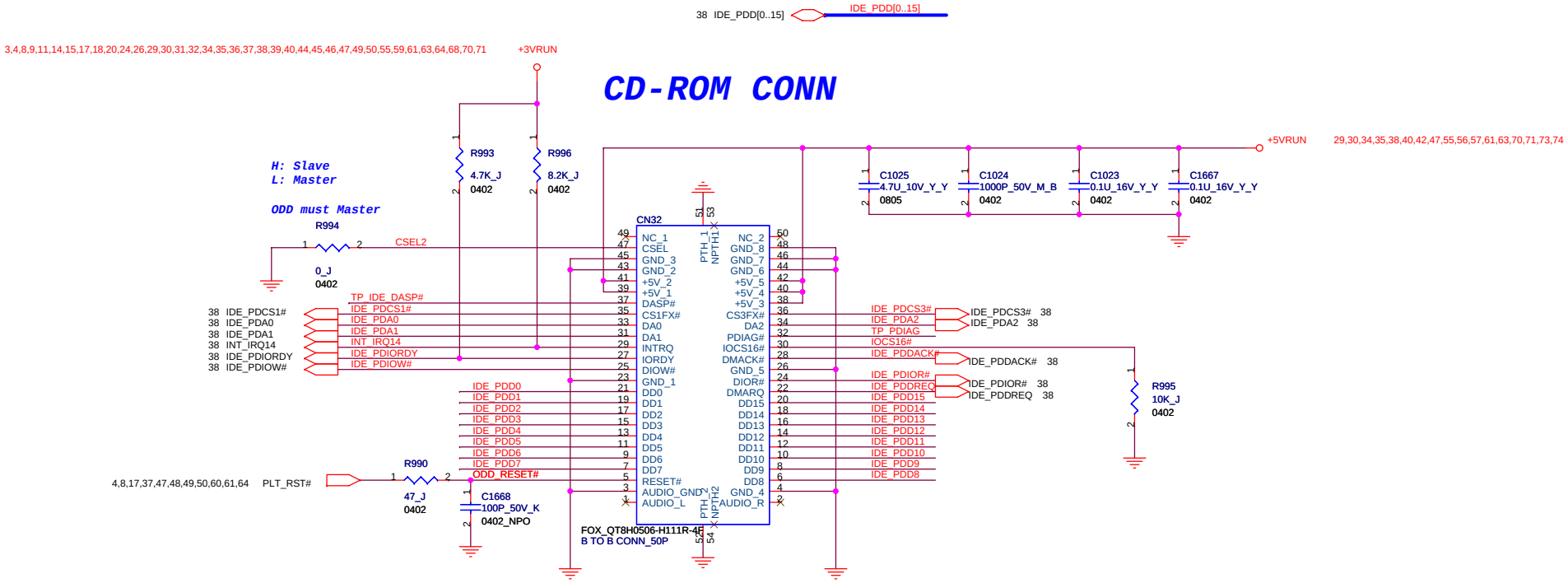

FOXCONN	HON HAI Precision Ind. Co., Ltd. CCPBG - R&D Division	
Title	PATA CD-ROM	
Size A3	Document Number (MS21-1-01)MainBoard (MBX-164) TYPE2	Rev 1.1
Date: Thursday, August 10, 2006	Sheet 43 of 78	

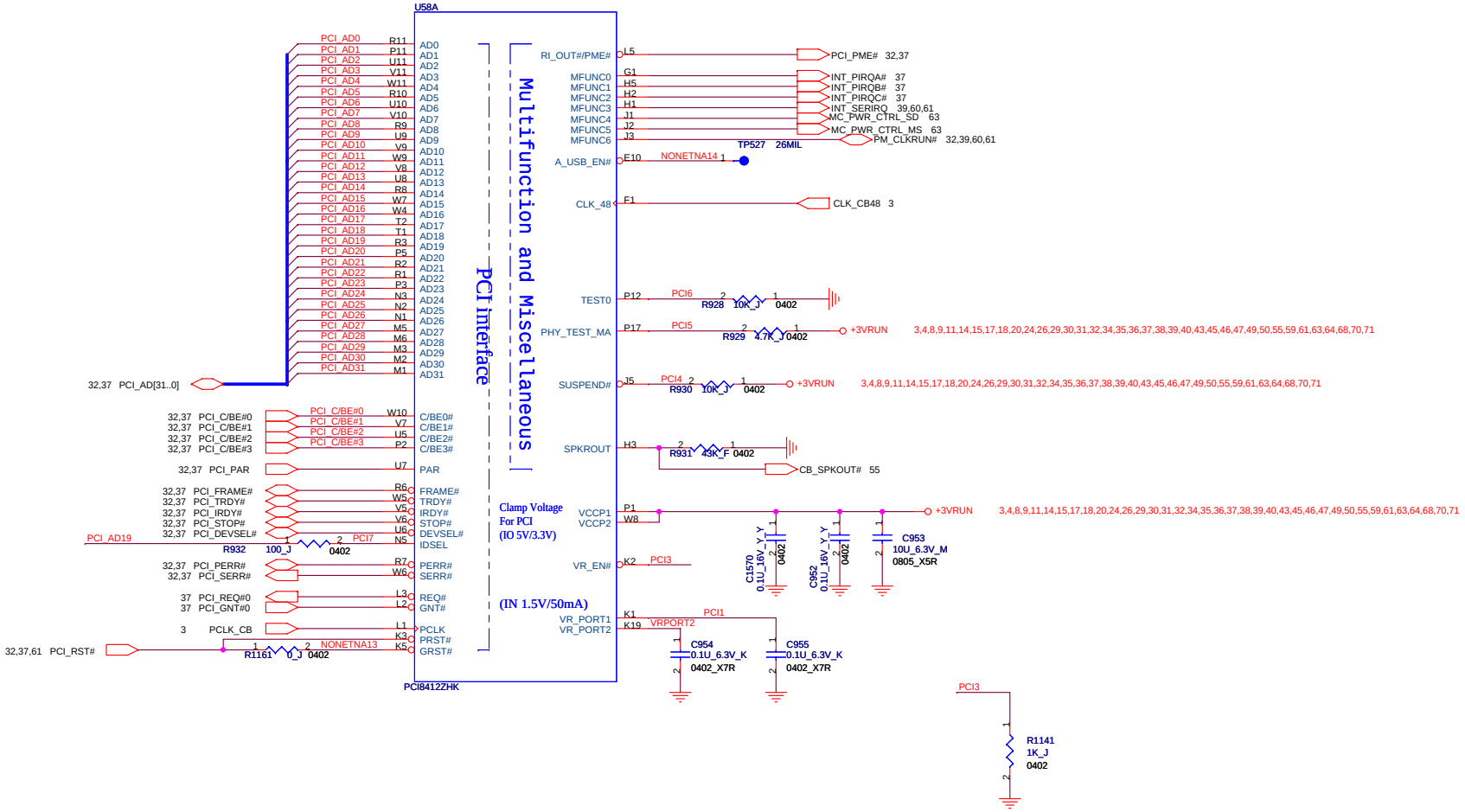

FOXCONN HON HAI Precision Ind. Co., Ltd. CCPBG - R&D Division

Title	PCI (PCI BUS)		
Size Custom	Document Number (MS21-1-01)MainBoard (MBX-164) TYPE2		Rev 1.1
Date: Thursday, August 10, 2006	Sheet 44 of 78		

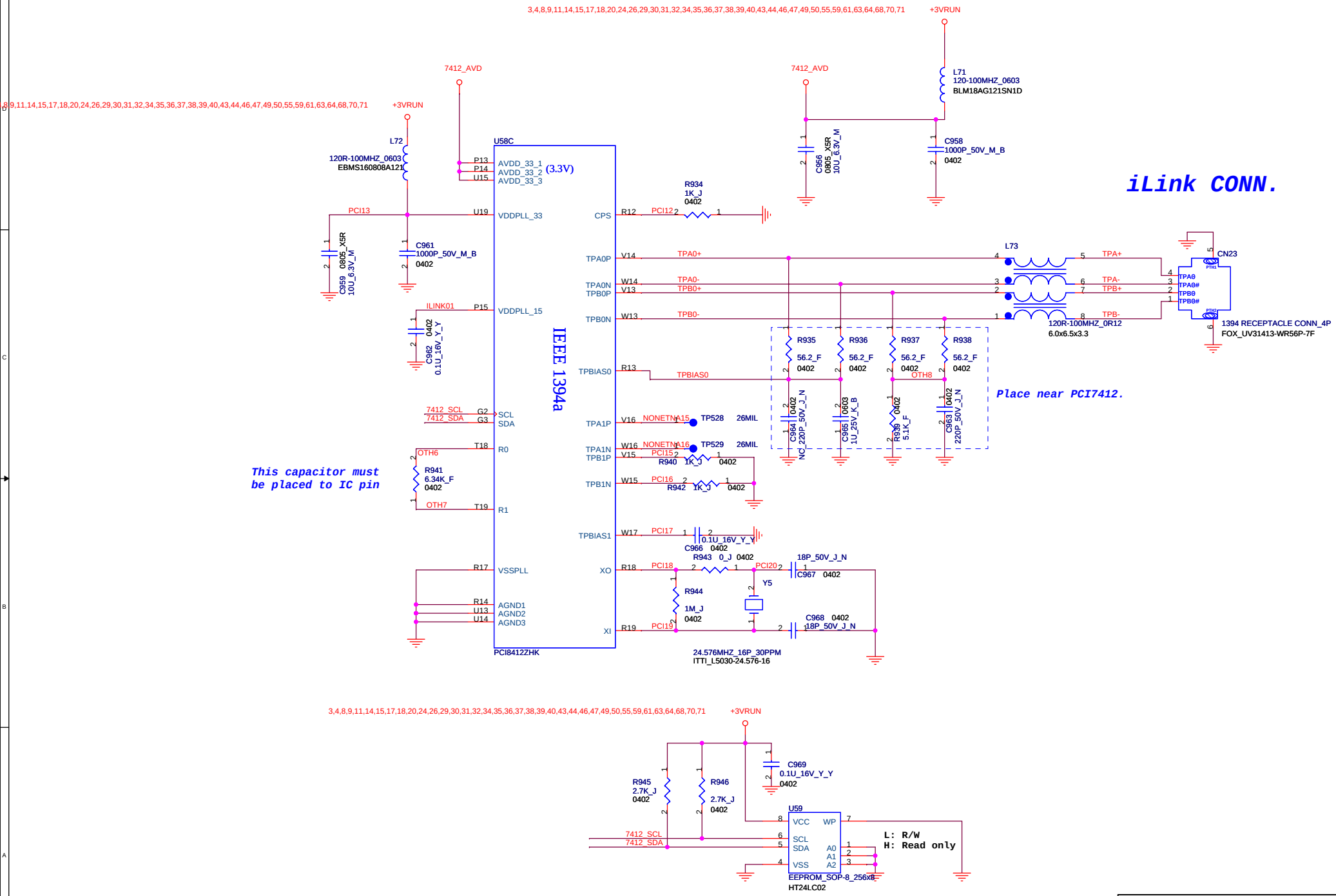

FOXCONN	HON HAI Precision Ind. Co., Ltd. CCPBG - R&D Division	
Title	PCI (ILINK)	
Size A3	Document Number (MS21-1-01)MainBoard (MBX-164) TYPE2	Rev 1.1
Date: Thursday, August 10, 2006	Sheet 45 of 78	

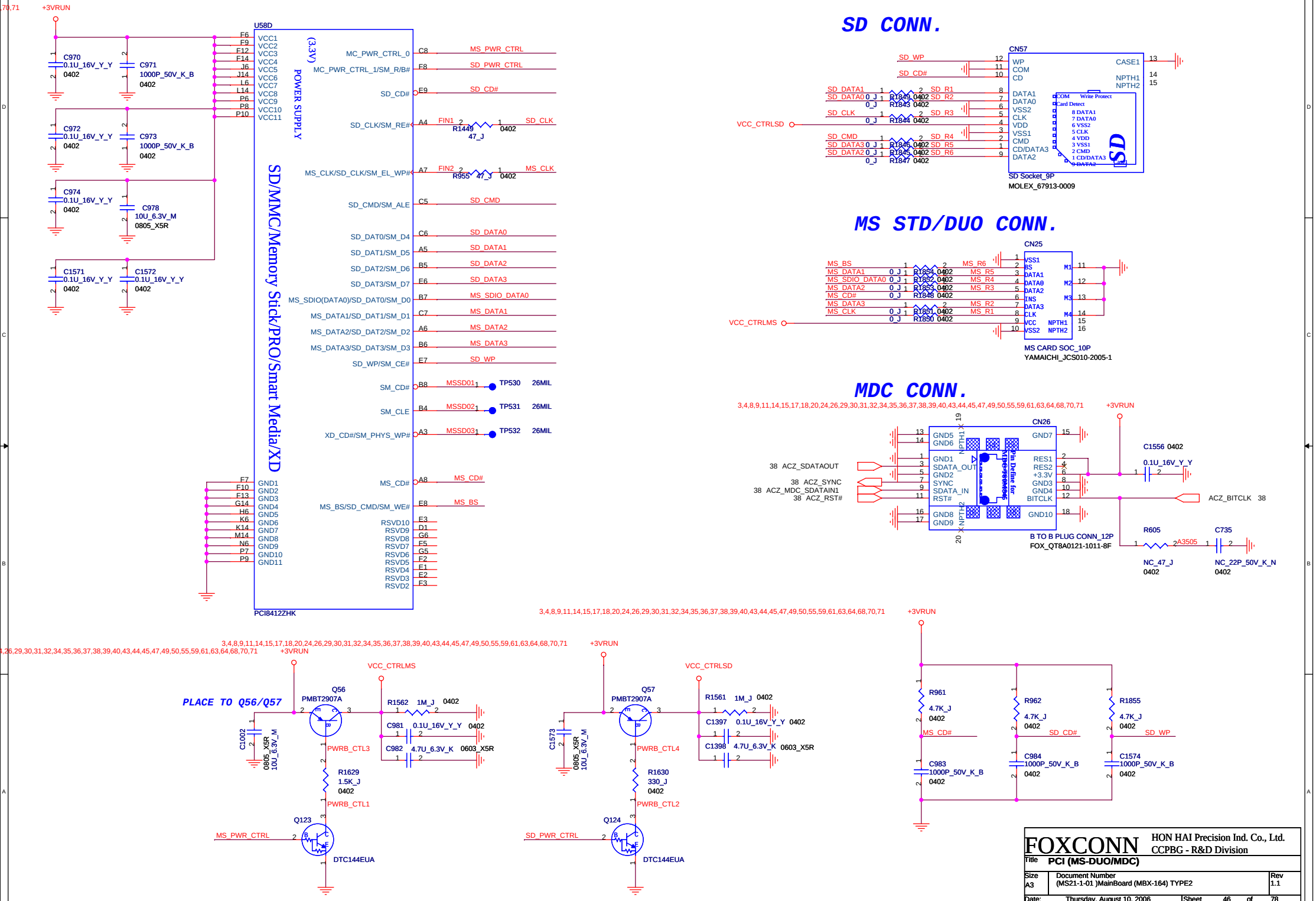

FOXCONN HON HAI Precision Ind. Co., Ltd. CCPBG - R&D Division

Title PCI (MS-DUO/MDC)

Size A3 | Document Number (MS21-1-01)MainBoard (MBX-164) TYPE2 | Rev 1.1

Date: Thursday, August 10, 2006 | Sheet 46 of 78

PCMCIA CONN.

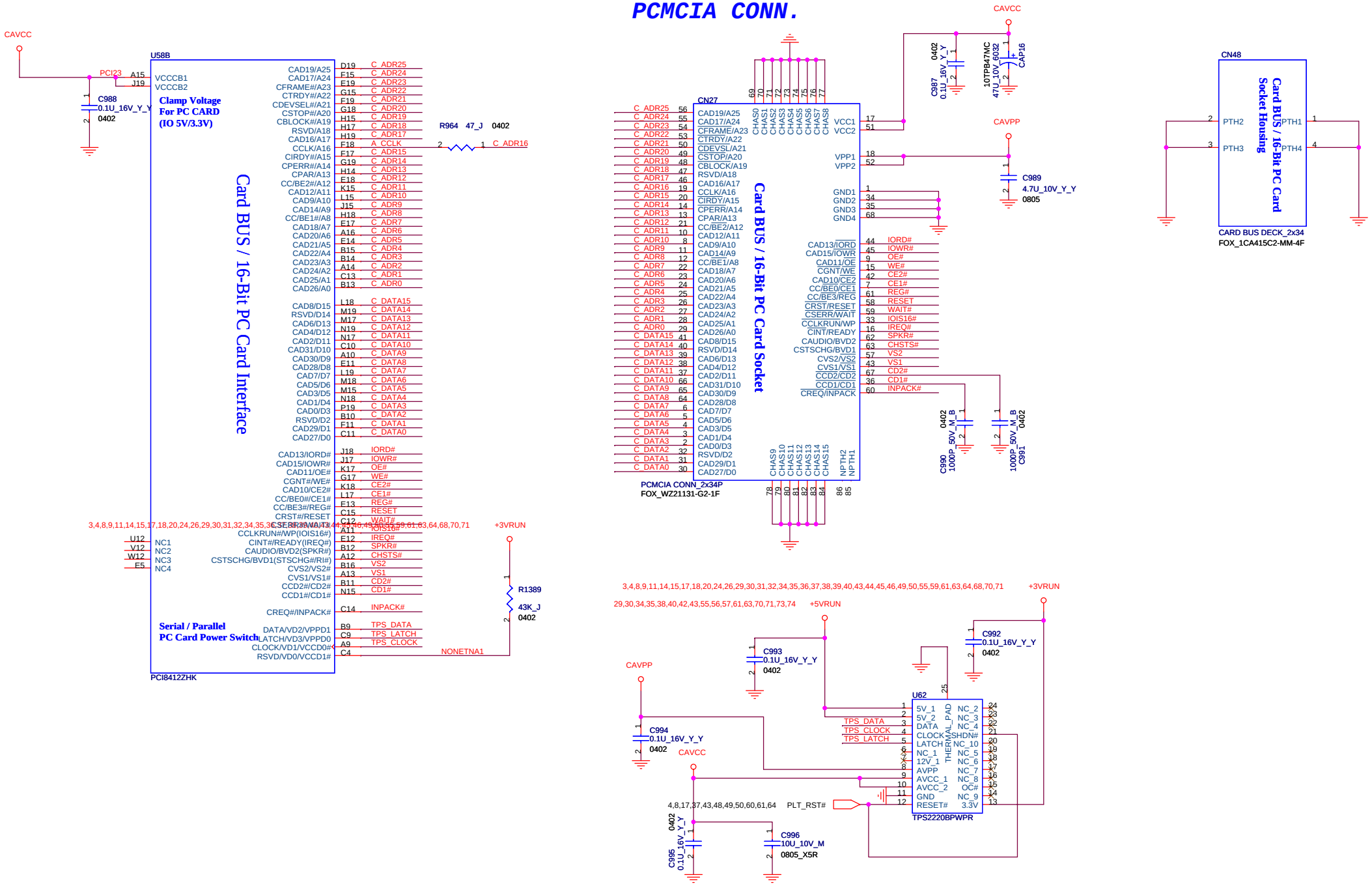

FOXCONN	HON HAI Precision Ind. Co., Ltd. CCPBG - R&D Division	
Title	PCI (PCMCIA)	
Size A3	Document Number (MS21-1-01)MainBoard (MBX-164) TYPE2	Rev 1.1
Date: Thursday, August 10, 2006	Sheet 47 of 78	

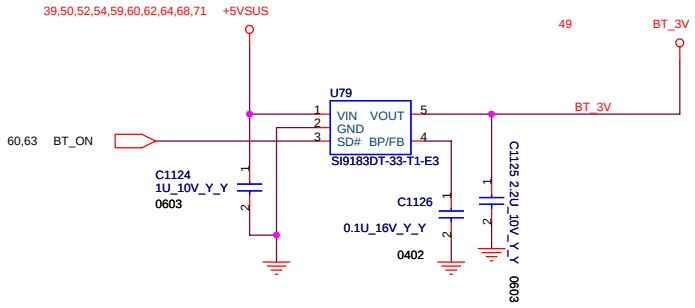

Bluetooth connector

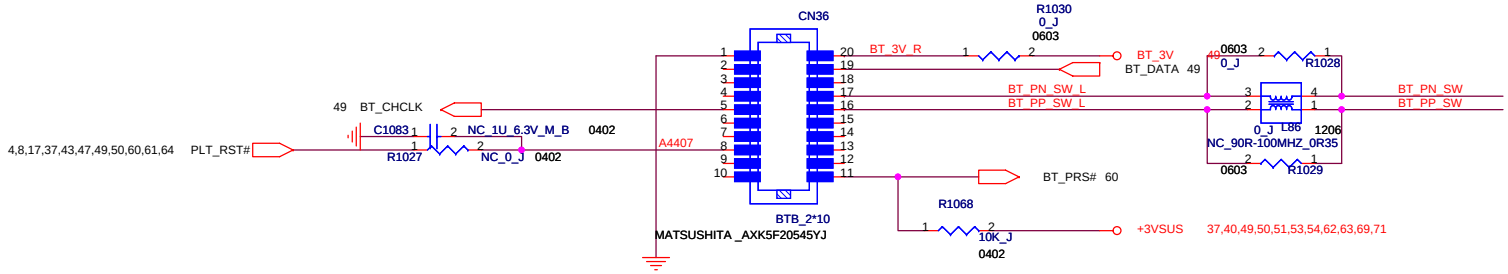

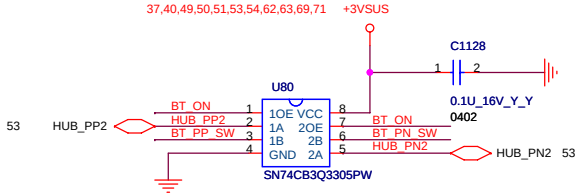

FOXCONN	HON HAI Precision Ind. Co., Ltd. CCPBG - R&D Division	
Title	FAN/Bluetooth	
Size A3	Document Number (MS21-1-01)MainBoard (MBX-164) TYPE2	Rev 1.1
Date: Thursday, August 10, 2006	Sheet 48 of 78	

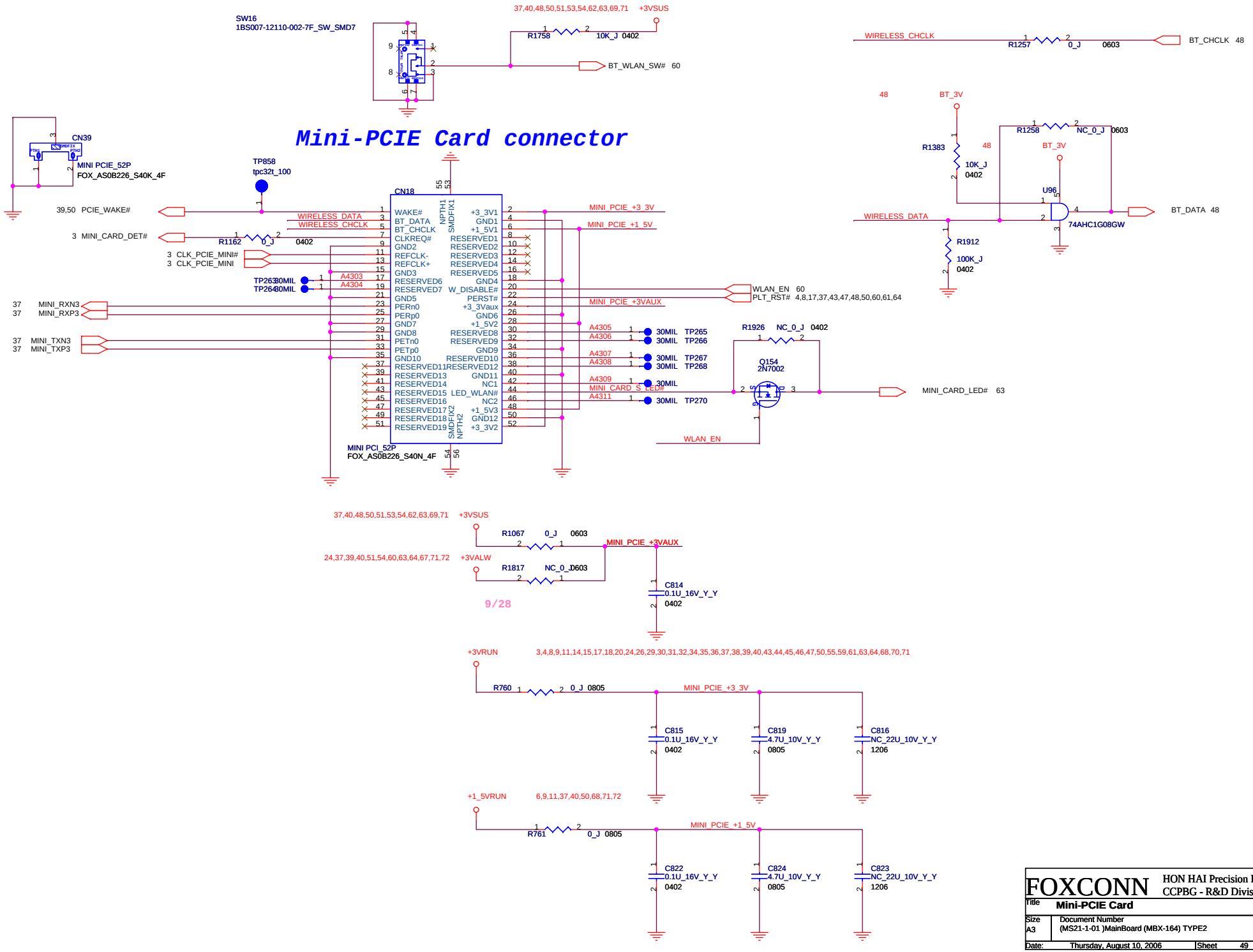
Mini-PCIE Card connector
SW16
1BS007-12110-002-7F_SW_SMD7
37,40,48,50,51,53,54,62,63,69,71 +3VSUS
R1758 10K_J 0402
BT_WLAN_SW# 60
WIRELESS_CHCLK
R1257 0_J 0603
BT_CHCLK 48
48 BT_3V
R1258 NC_0_J 0603
R1383 10K_J 0402
U96
74AHC1G08GW
BT_DATA 48
WIRELESS_DATA
R1912 100K_J 0402
CN39
MINI PCIE_52P
FOX_AS0B226_S40K_4F
TP858
tpc32t_100
CN18
39,50 PCIE_WAKE#
3 MINI_CARD_DET#
R1162 0_J 0402
3 CLK_PCIE_MINI#
3 CLK_PCIE_MINI
TP263 30MIL
TP264 30MIL
A4303
A4304
37 MINI_RXN3
37 MINI_RXP3
37 MINI_TXN3
37 MINI_TXP3
WAKE# BT_DATA BT_CHCLK CLKREQ# GND2 REFCLK- REFCLK+ GND3 RESERVED6 RESERVED7 GND5 PERn0 PERp0 GND7 GND8 PETn0 PETp0 GND10 RESERVED11 RESERVED13 RESERVED14 RESERVED15 RESERVED16 RESERVED17 RESERVED18 RESERVED19
+3_3V1 GND1 +1_5V1 RESERVED1 RESERVED2 RESERVED3 RESERVED4 RESERVED5 GND4 W_DISABLE# PERST# +3_3Vaux GND6 +1_5V2 RESERVED8 RESERVED9 GND9 RESERVED10 RESERVED12 GND11 NC1 LED_WLAN# NC2 +1_5V3 GND12 +3_3V2
MINI PCI_52P
FOX_AS0B226_S40N_4F
MINI_PCIE_+3_3V
MINI_PCIE_+1_5V
MINI_PCIE_+3VAUX
WLAN_EN 60
PLT_RST# 4,8,17,37,43,47,48,50,60,61,64
A4305 30MIL TP265
A4306 30MIL TP266
A4307 30MIL TP267
A4308 30MIL TP268
A4309 30MIL
MINI_CARD_S_LED#
A4311 30MIL TP270
R1926 NC_0_J 0402
Q154
2N7002
MINI_CARD_LED# 63
WLAN_EN
37,40,48,50,51,53,54,62,63,69,71 +3VSUS
R1067 0_J 0603
MINI_PCIE_+3VAUX
24,37,39,40,51,54,60,63,64,67,71,72 +3VALW
R1817 NC_0_J 0603
C814 0.1U_16V_Y_Y 0402
9/28
+3VRUN 3,4,8,9,11,14,15,17,18,20,24,26,29,30,31,32,34,35,36,37,38,39,40,43,44,45,46,47,50,55,59,61,63,64,68,70,71
R760 0_J 0805
MINI_PCIE_+3_3V
C815 0.1U_16V_Y_Y 0402
C819 4.7U_10V_Y_Y 0805
C816 NC_22U_10V_Y_Y 1206
+1_5VRUN 6,9,11,37,40,50,68,71,72
R761 0_J 0805
MINI_PCIE_+1_5V
C822 0.1U_16V_Y_Y 0402
C824 4.7U_10V_Y_Y 0805
C823 NC_22U_10V_Y_Y 1206
FOXCONN
HON HAI Precision Ind. Co., Ltd.
CCPBG - R&D Division
Title Mini-PCIE Card
Size A3
Document Number (MS21-1-01)MainBoard (MBX-164) TYPE2
Rev 1.1
Date: Thursday, August 10, 2006
Sheet 49 of 78

EXPRESS Card

VOLTAGE INPUTS(1)			LOGIC INPUTS			VOLTAGE OUTPUTS(2)			MODE(3)
AUXIN	3.3VIN	1.5VIN	$\overline{SHDN}$	$\overline{STBY}$	$\overline{CF}$ (4)	AUXOUT	3.3VOUT	1.5VOUT	
Off	x	x	x	x	x	Off	Off	Off	OFF
On	x	x	0	x	x	GND	GND	GND	Shutdown
On	x	x	1	x	1	GND	GND	GND	No Card
On	On	On	1	0	0	On	Off	Off	Standby
On	On	On	1	1	0	On	On	On	Card Inserted

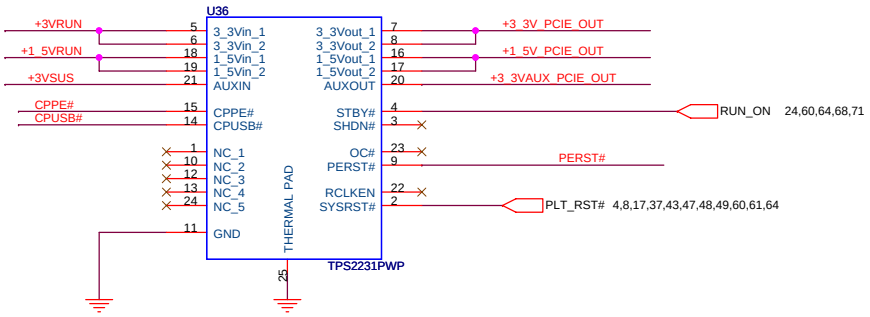

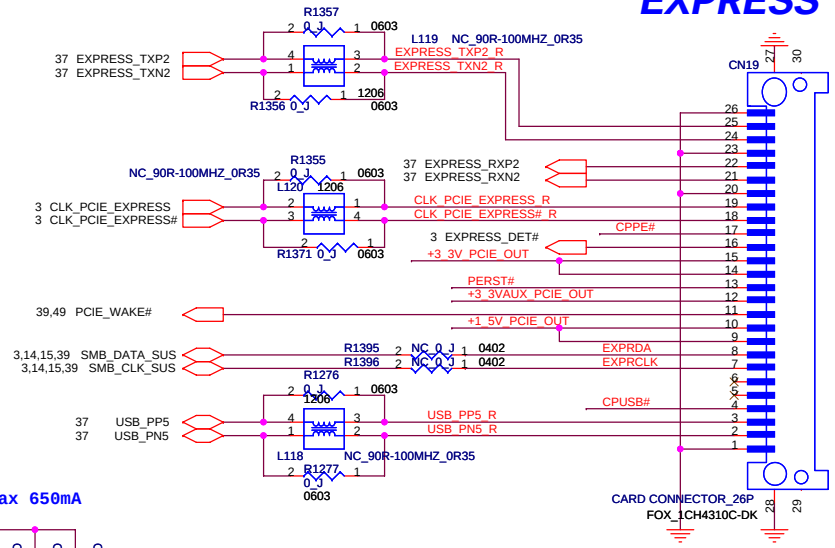

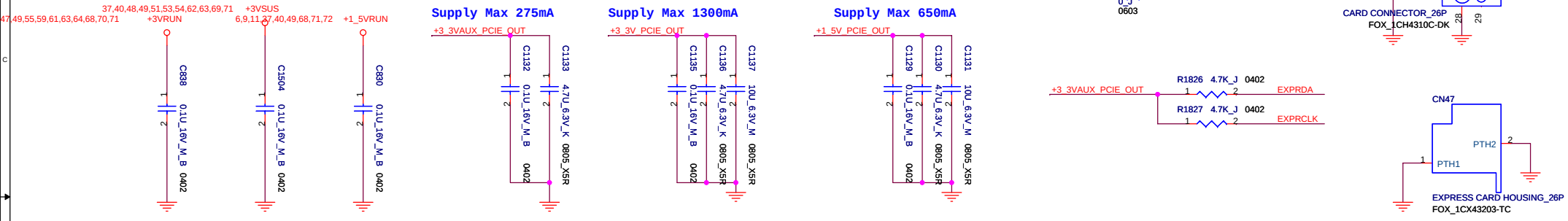

Oide connector

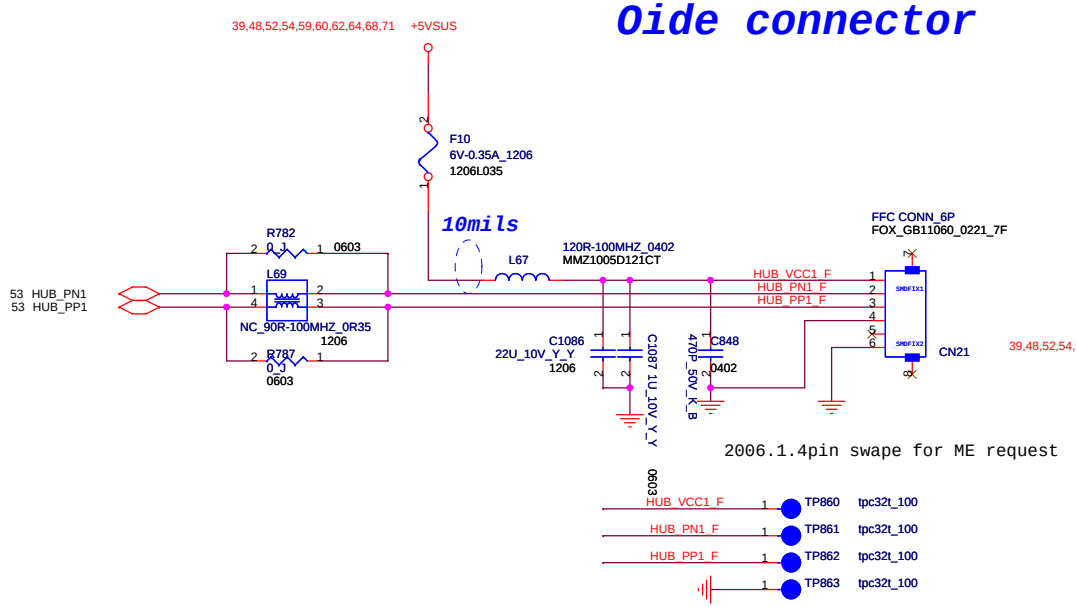

CAMERA connector

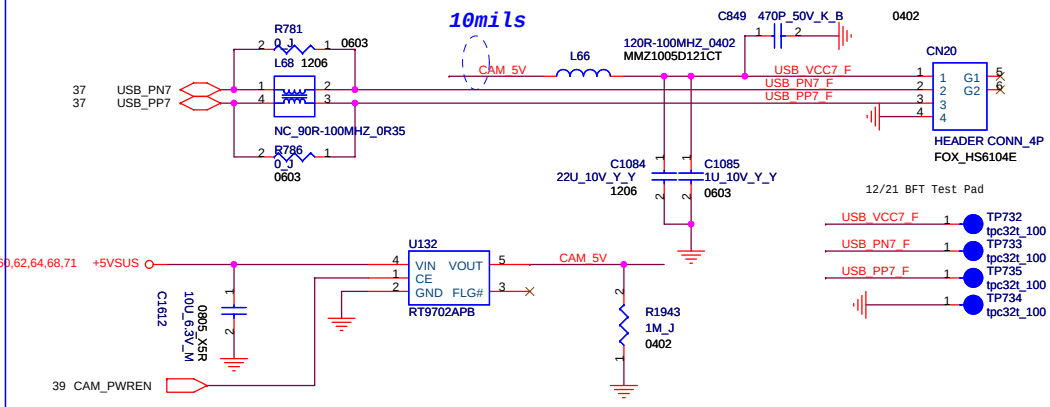

FOXCONN	HON HAI Precision Ind. Co., Ltd. CCPBG - R&D Division	
Title	EXPRESS/CAM/OIDE	
Size A3	Document Number (MS21-1-01)MainBoard (MBX-164) TYPE2	Rev 1.1
Date: Thursday, August 10, 2006	Sheet 50 of 78	

LAN connector

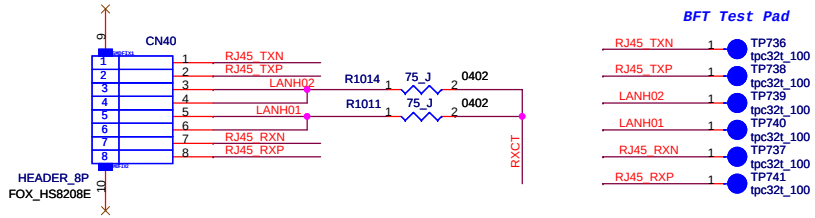

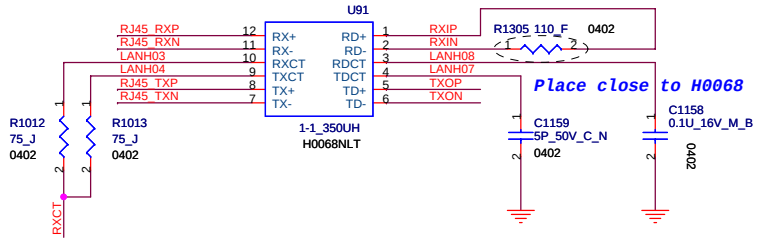

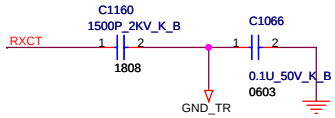

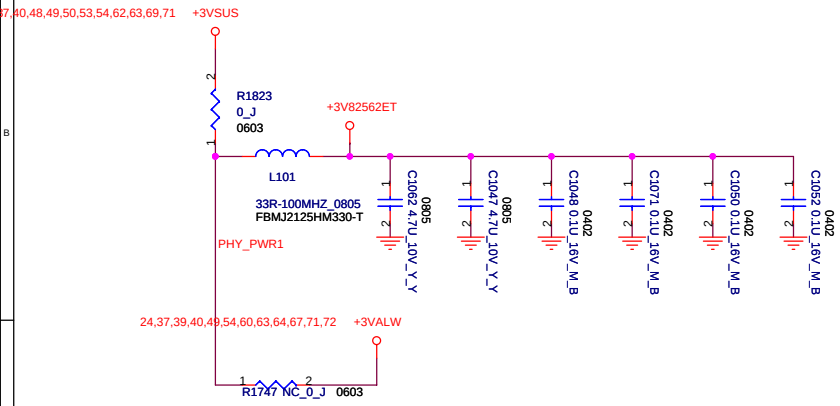

LAN PHY

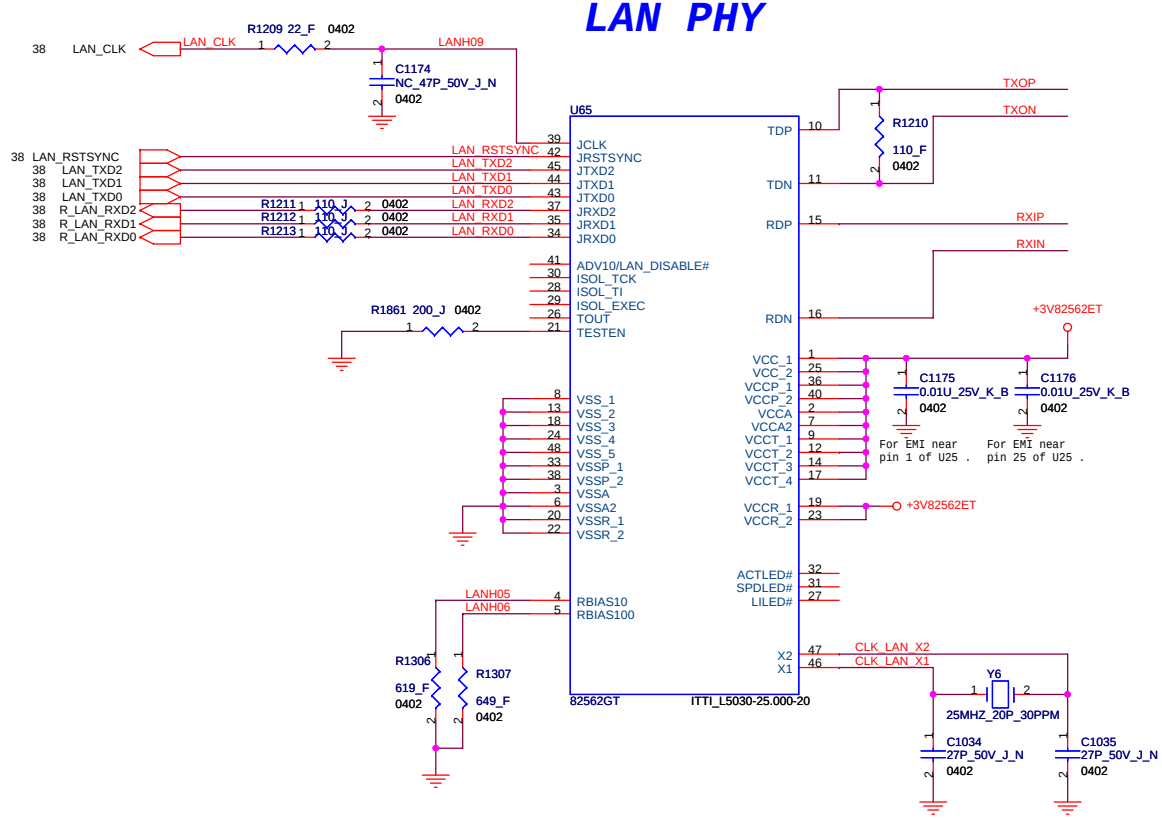

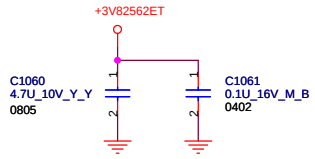

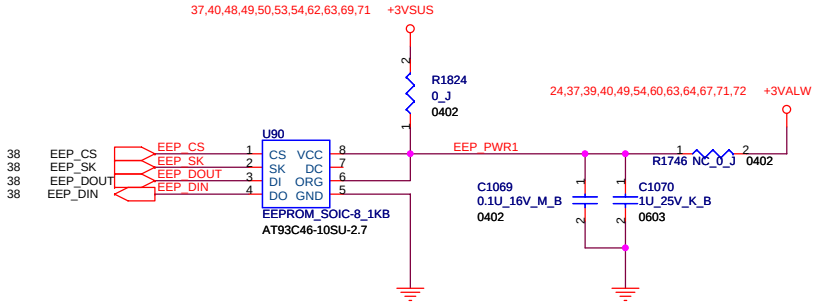

Default for S3 waking up event ,
backup for S4 waking up event

FOXCONN	HON HAI Precision Ind. Co., Ltd. CCPBG - R&D Division	
Title	LAN	
Size A3	Document Number (MS21-1-01)MainBoard (MBX-164) TYPE2	Rev 1.1
Date: Thursday, August 10, 2006	Sheet 51 of 78	

USB connector *2

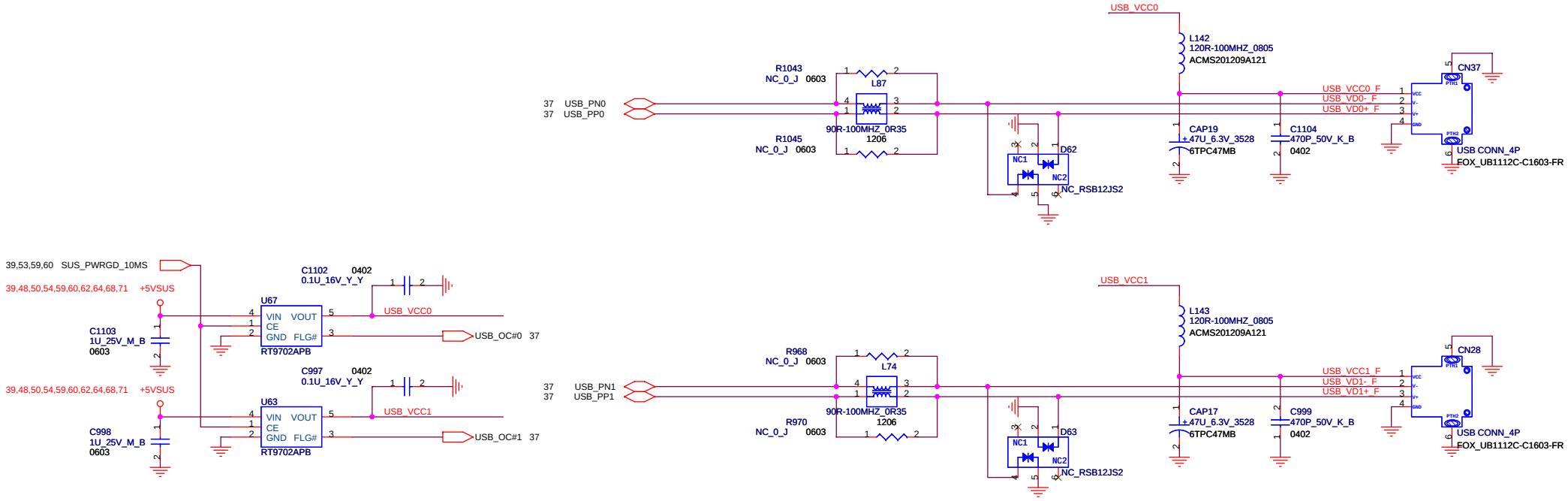

FOXCONN	HON HAI Precision Ind. Co., Ltd. CCPBG - R&D Division	
Title	USB2.0/DOCKING CONN.	
Size A3	Document Number (MS21-1-01)MainBoard (MBX-164) TYPE2	Rev 1.1
Date: Thursday, August 10, 2006	Sheet 52 of 78	

Application design in datasheet 27 ohm;
but 30ohm is also in range of USB Spec.

USB 1.1 HUB

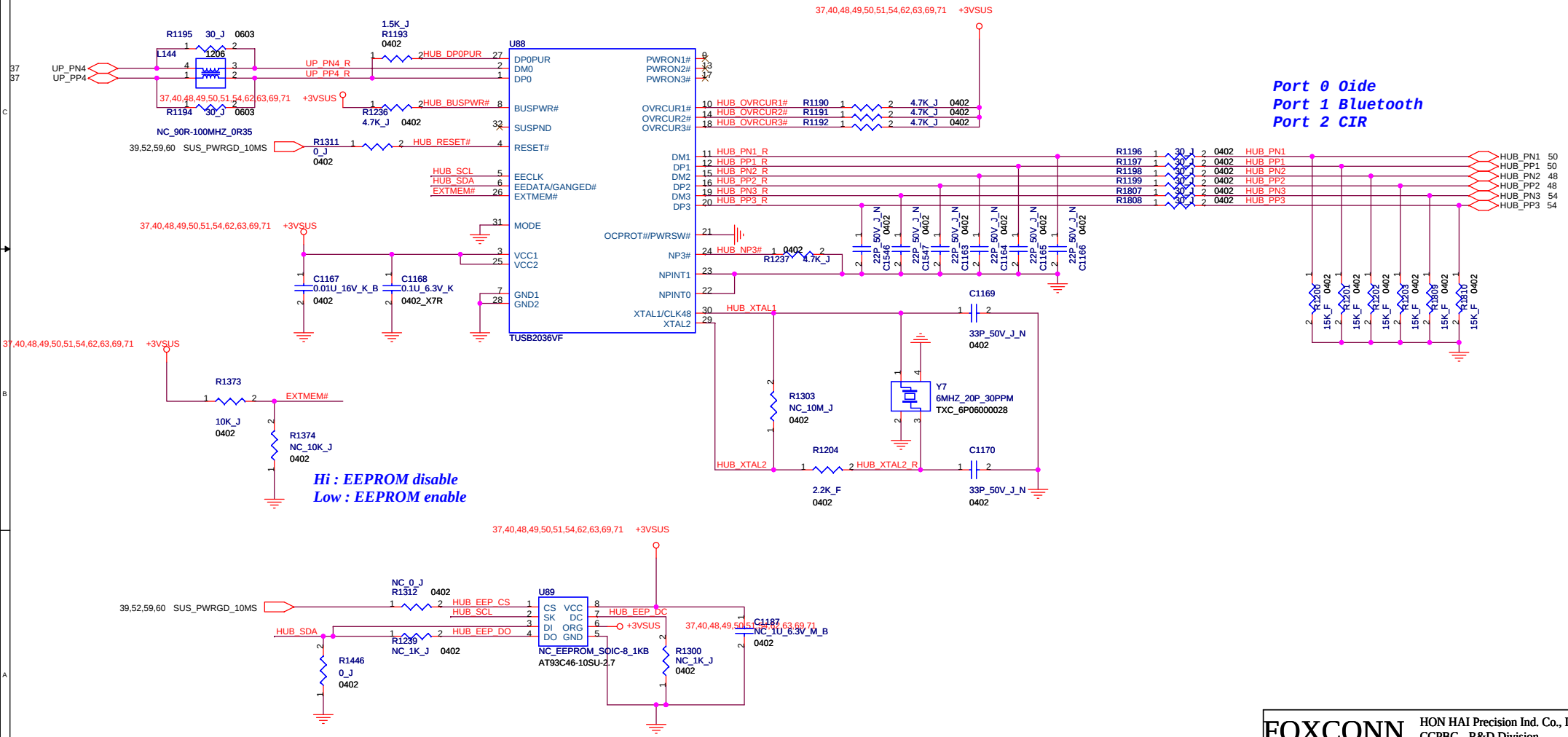

FOXCONN	HON HAI Precision Ind. Co., Ltd. CCPBG - R&D Division	
Title	USB HUB	
Size A3	Document Number (MS21-1-01)MainBoard (MBX-164) TYPE2	Rev 1.1
Date: Thursday, August 10, 2006	Sheet 53 of 78	

IR Rreceiver connector

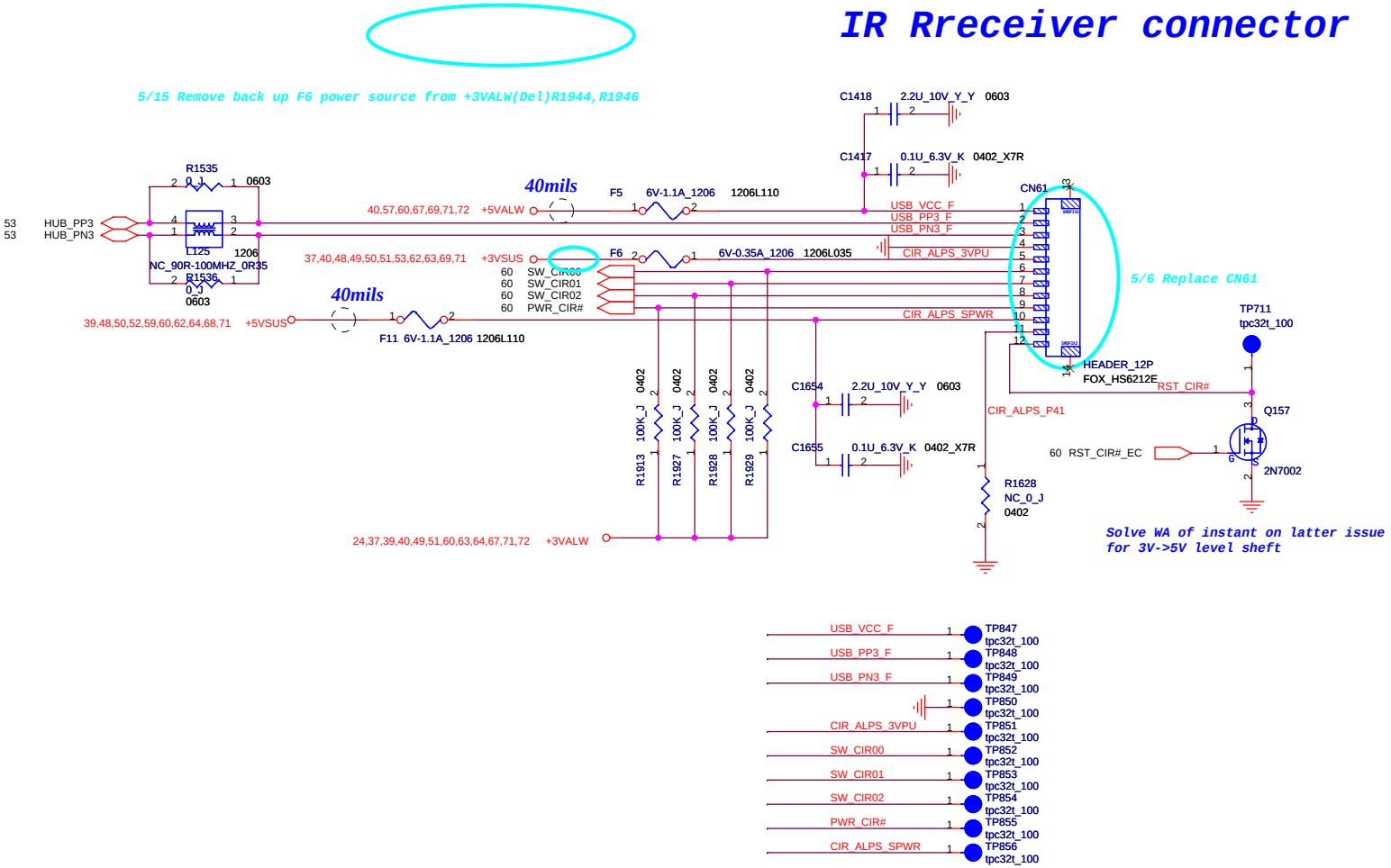

FOXCONN	HON HAI Precision Ind. Co., Ltd. CCPBG - R&D Division	
Title	LED/LID SW#/Touch PAD	
Size A3	Document Number (MS21-1-01)MainBoard (MBX-164) TYPE2	Rev 1.1
Date: Thursday, August 10, 2006	Sheet 54 of 78	

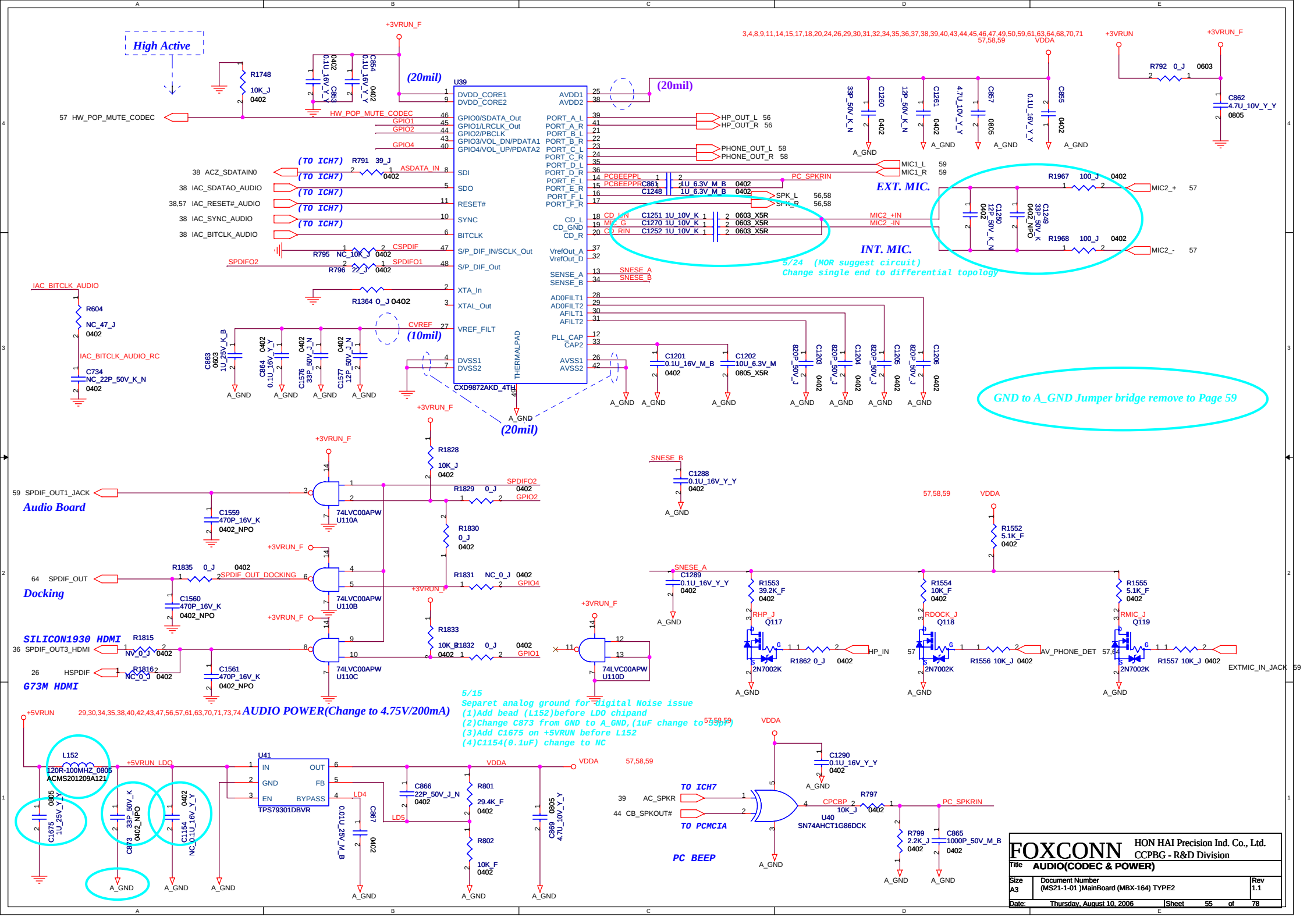
High Active
U39
CXD9872AKD_4TH
THERMALPAD
(20mil)
(10mil)
(TO ICH7)
EXT. MIC.
INT. MIC.
5/24 (MOR suggest circuit)
Change single end to differential topology
GND to A_GND Jumper bridge remove to Page 59
Audio Board
Docking
SILICON1930 HDMI
G73M HDMI
74LVC00APW
2N7002K
AUDIO POWER(Change to 4.75V/200mA)
5/15
Separet analog ground for digital Noise issue
(1)Add bead (L152)before LDO chipand
(2)Change C873 from GND to A_GND,(1uF change to 33pF)
(3)Add C1675 on +5VRUN before L152
(4)C1154(0.1uF) change to NC
TPS79301DBVR
SN74AHCT1G86DCK
TO ICH7
TO PCMCIA
PC BEEP
FOXCONN
HON HAI Precision Ind. Co., Ltd.
CCPBG - R&D Division
Title AUDIO(CODEC & POWER)
Size A3
Document Number (MS21-1-01)MainBoard (MBX-164) TYPE2
Rev 1.1
Date: Thursday, August 10, 2006
Sheet 55 of 78

050806: Shoei CAP will EOL
CAP24,CAP25(SP CAP) change to Stuff
CAP22,CAP23(Shoei CAP) change to No Stuff

Max 1.7A

To Audio Board

CO-Layout for EOL backup

050806: PBSS2515F.115 will EOL
Q77,Q78,Q143,Q144 change to PBSS2515E.115

INTERNAL SPEAKER

050806:(Improve the voice of speaker up to 0.94W).
Add damping Resistors R1953 on AMP_SRIN,R1954 on AMP_SLIN
then speaker amp output won't be distorted.
For speaker loudness issue.

2006/6/26
Modify internal speaker AMP gain setting,change R1953/R1954
from 4.7K (AMP output 1.12W) to 5.1Kohm(AMP output0.98W)
to fit in speaker (1.0W)spec.

050806:(Improve the voice of speaker up to 0.94W).
EMI team confirm whether
it is ok to use 0ohm resistor replacing bead

(20mil) (20mil)

(20mil)

BFT Test Pad

050806:(Improve the voice of speaker up to 0.94W).
Change R1932 from 6.8K to 5.6K,then amp gain
change from 8dB to 10dB For speaker loudness issue

FOXCONN	HON HAI Precision Ind. Co., Ltd. CCPBG - R&D Division	
Title	AUDIO(AMP & HP & SPK)	
Size A3	Document Number (MS21-1-01)MainBoard (MBX-164) TYPE2	Rev 1.1
Date: Thursday, August 10, 2006	Sheet 56 of 78	

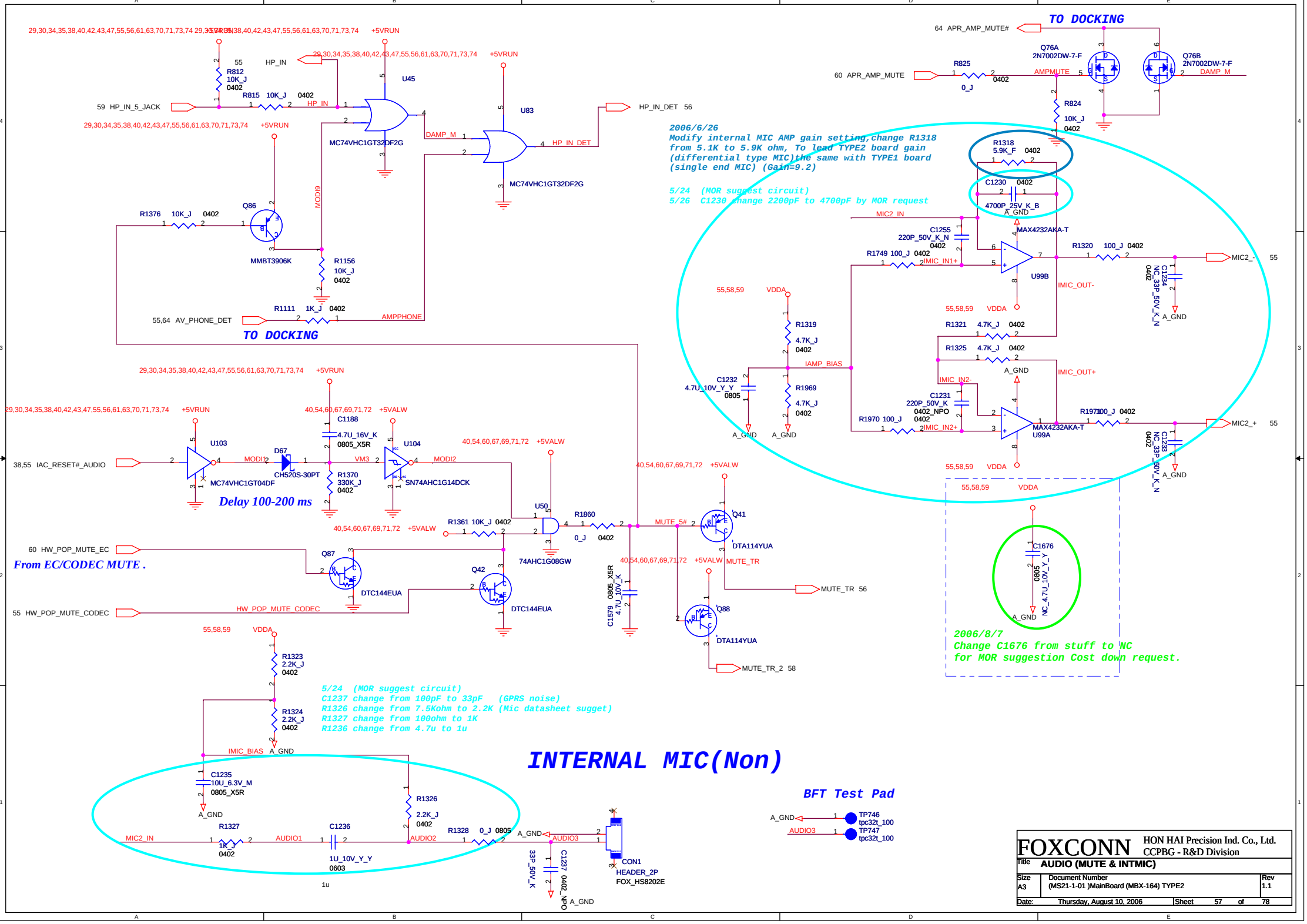
TO DOCKING
64 APR_AMP_MUTE#
60 APR_AMP_MUTE
Q76A 2N7002DW-7-F
Q76B 2N7002DW-7-F
R825 0_J 0402
AMPMUTE
DAMP_M
R824 10K_J 0402
59 HP_IN_5_JACK
R812 10K_J 0402
R815 10K_J 0402
HP_IN
U45
MC74VHC1GT32DF2G
U83
HP_IN_DET 56
DAMP_M
MODI9
Q86
MMBT3906K
R1376 10K_J 0402
R1156 10K_J 0402
R1111 1K_J 0402
55,64 AV_PHONE_DET
AMPPHONE
TO DOCKING
2006/6/26
Modify internal MIC AMP gain setting,change R1318
from 5.1K to 5.9K ohm, To lead TYPE2 board gain
(differential type MIC)the same with TYPE1 board
(single end MIC) (Gain=9.2)
5/24 (MOR suggest circuit)
5/26 C1230 change 2200pF to 4700pF by MOR request
R1318 5.9K_F 0402
C1230 0402 4700P_25V_K_B
A_GND
MIC2_IN
C1255 220P_50V_K_N 0402
MAX4232AKA-T
R1749 100_J 0402
IMIC_IN1+
U99B
R1320 100_J 0402
MIC2_- 55
C1234 NC_33P_50V_K_N 0402
IMIC_OUT-
55,58,59 VDDA
R1319 4.7K_J 0402
R1321 4.7K_J 0402
R1325 4.7K_J 0402
IAMP_BIAS
IMIC_OUT+
C1232 4.7U_10V_Y_Y 0805
R1969 4.7K_J 0402
IMIC_IN2-
C1231 220P_50V_K 0402_NPO 0402
R1970 100_J
IMIC_IN2+
U99A
R1971 100_J 0402
MIC2_+ 55
C1233 NC_33P_50V_K_N 0402
C1676 0805 NC_4.7U_10V_Y_Y
2006/8/7
Change C1676 from stuff to NC
for MOR suggestion Cost down request.
29,30,34,35,38,40,42,43,47,55,56,61,63,70,71,73,74
+5VRUN
40,54,60,67,69,71,72
+5VALW
38,55 IAC_RESET#_AUDIO
U103 MC74VHC1GT04DF
MODI2
D67 CH520S-30PT
C1188 4.7U_16V_K 0805_X5R
R1370 330K_J 0402
VM3
U104 SN74AHC1G14DCK
Delay 100-200 ms
U50 74AHC1G08GW
R1361 10K_J 0402
R1860 0_J 0402
MUTE_5#
Q41 DTA114YUA
MUTE_TR
MUTE_TR 56
Q88 DTA114YUA
MUTE_TR_2 58
60 HW_POP_MUTE_EC
From EC/CODEC MUTE .
Q87 DTC144EUA
Q42 DTC144EUA
55 HW_POP_MUTE_CODEC
HW_POP_MUTE_CODEC
C1579 0805_X5R 4.7U_10V_K
R1323 2.2K_J 0402
R1324 2.2K_J 0402
5/24 (MOR suggest circuit)
C1237 change from 100pF to 33pF (GPRS noise)
R1326 change from 7.5Kohm to 2.2K (Mic datasheet sugget)
R1327 change from 100ohm to 1K
R1236 change from 4.7u to 1u
IMIC_BIAS
C1235 10U_6.3V_M 0805_X5R
R1326 2.2K_J 0402
R1327 1K_J 0402
C1236 1U_10V_Y_Y 0603
R1328 0_J 0805
AUDIO1
AUDIO2
AUDIO3
MIC2_IN
CON1 HEADER_2P FOX_HS8202E
C1237 0402_NPO 33P_50V_K
INTERNAL MIC(Non)
BFT Test Pad
TP746 tpc32t_100
TP747 tpc32t_100
FOXCONN
HON HAI Precision Ind. Co., Ltd.
CCPBG - R&D Division
Title AUDIO (MUTE & INTMIC)
Size A3
Document Number (MS21-1-01)MainBoard (MBX-164) TYPE2
Rev 1.1
Date: Thursday, August 10, 2006
Sheet 57 of 78

PHONE OUT

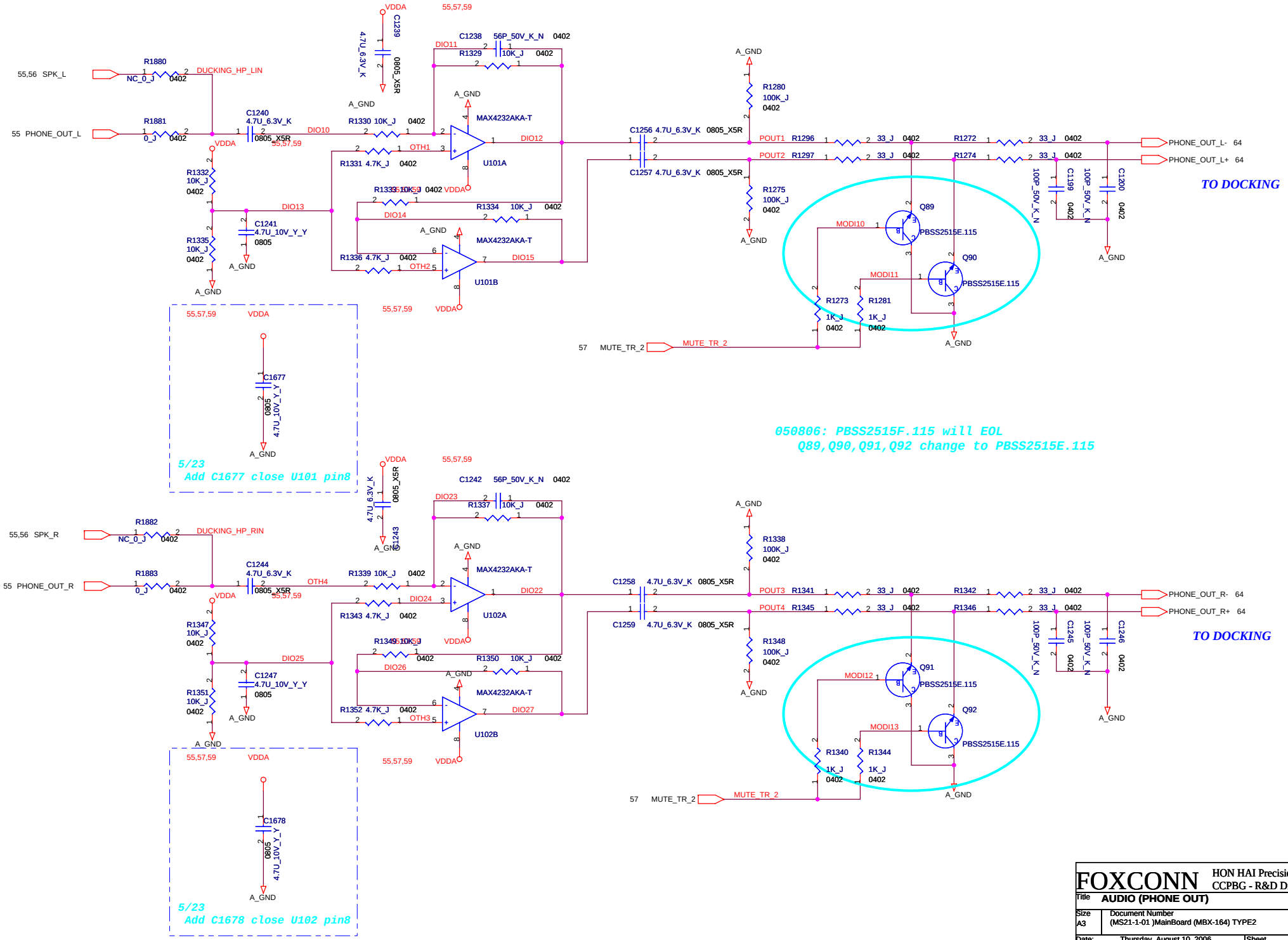

FOXCONN	HON HAI Precision Ind. Co., Ltd. CCPBG - R&D Division	
Title	AUDIO (PHONE OUT)	
Size A3	Document Number (MS21-1-01)MainBoard (MBX-164) TYPE2	Rev 1.1
Date: Thursday, August 10, 2006	Sheet 58 of 78	

Audio Board connector

050806: (To improve SNR issue)
Add 1uF capacitors close CN64 :C1671,C1672 on USB_VCC2,
C1669 on +3VRUN_AUDIO_BD, and C1670 on VDDA .

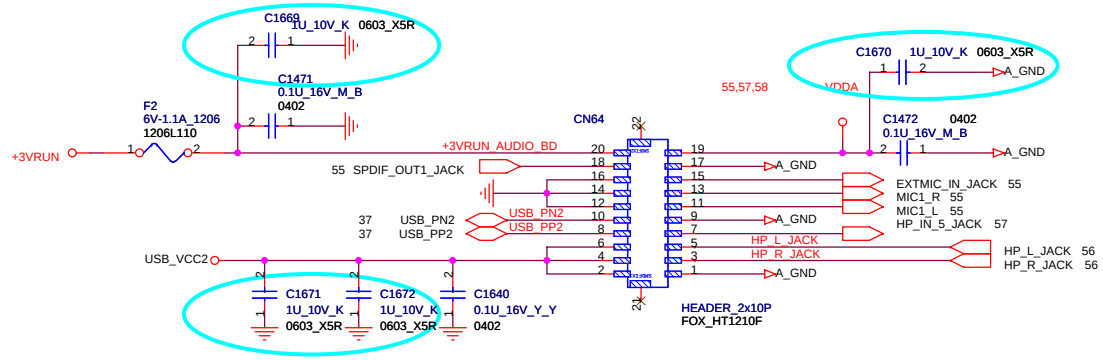

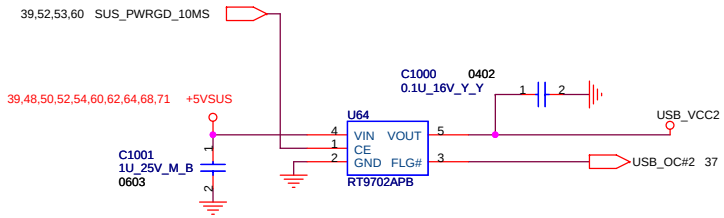

5/6
Separet analog ground for digital Noise issue:
(1)Remove GP3 (Close Jumper)not bridge between GND and A_GND
(2)Backup two jumper resistors for bridge between GND and A_GND
(C1388,C1966 on Screw hole H3,C1957,C1959 on screw hole H5)
(3)Isolate screw hole H4,add 100pF capacitors C1673,C1674 for EMI,Zener diode D100 for ESD
(4)Add jumper resistor for Return patch R1955 close L70(+5VAMP) & R1958 close U41(+5VRUN) &1960 close codec.

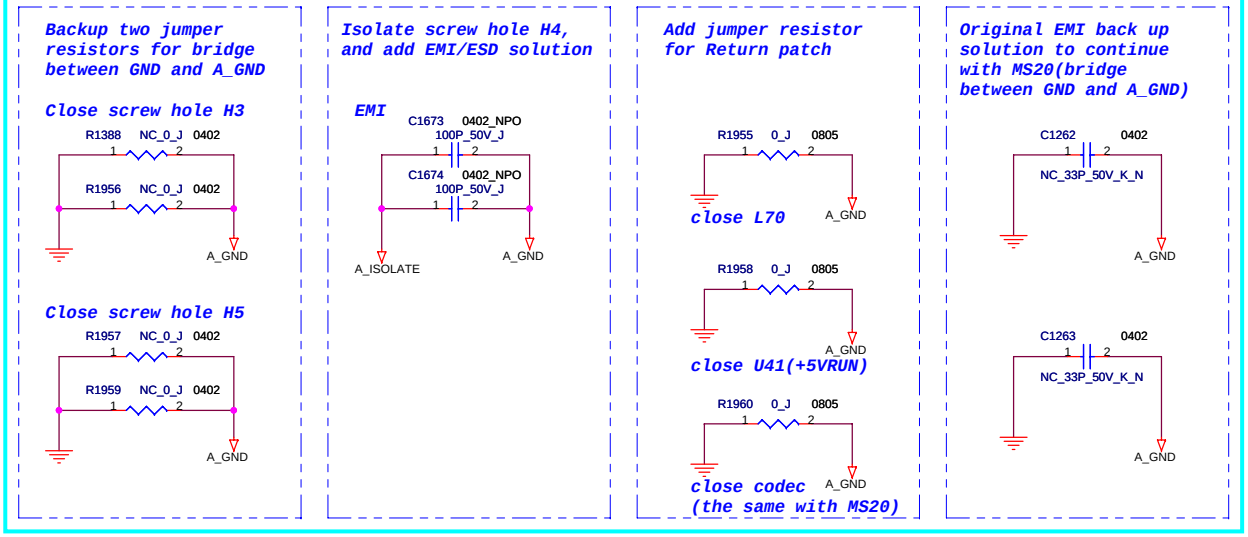

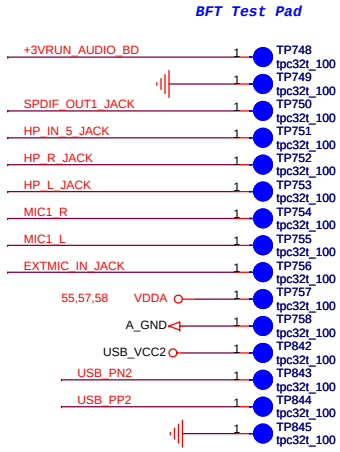

FOXCONN	HON HAI Precision Ind. Co., Ltd. CCPBG - R&D Division	
Title	Touch Pad & LED Board	
Size A3	Document Number (MS21-1-01)MainBoard (MBX-164) TYPE2	Rev 1.1
Date: Thursday, August 10, 2006	Sheet 59 of 78	

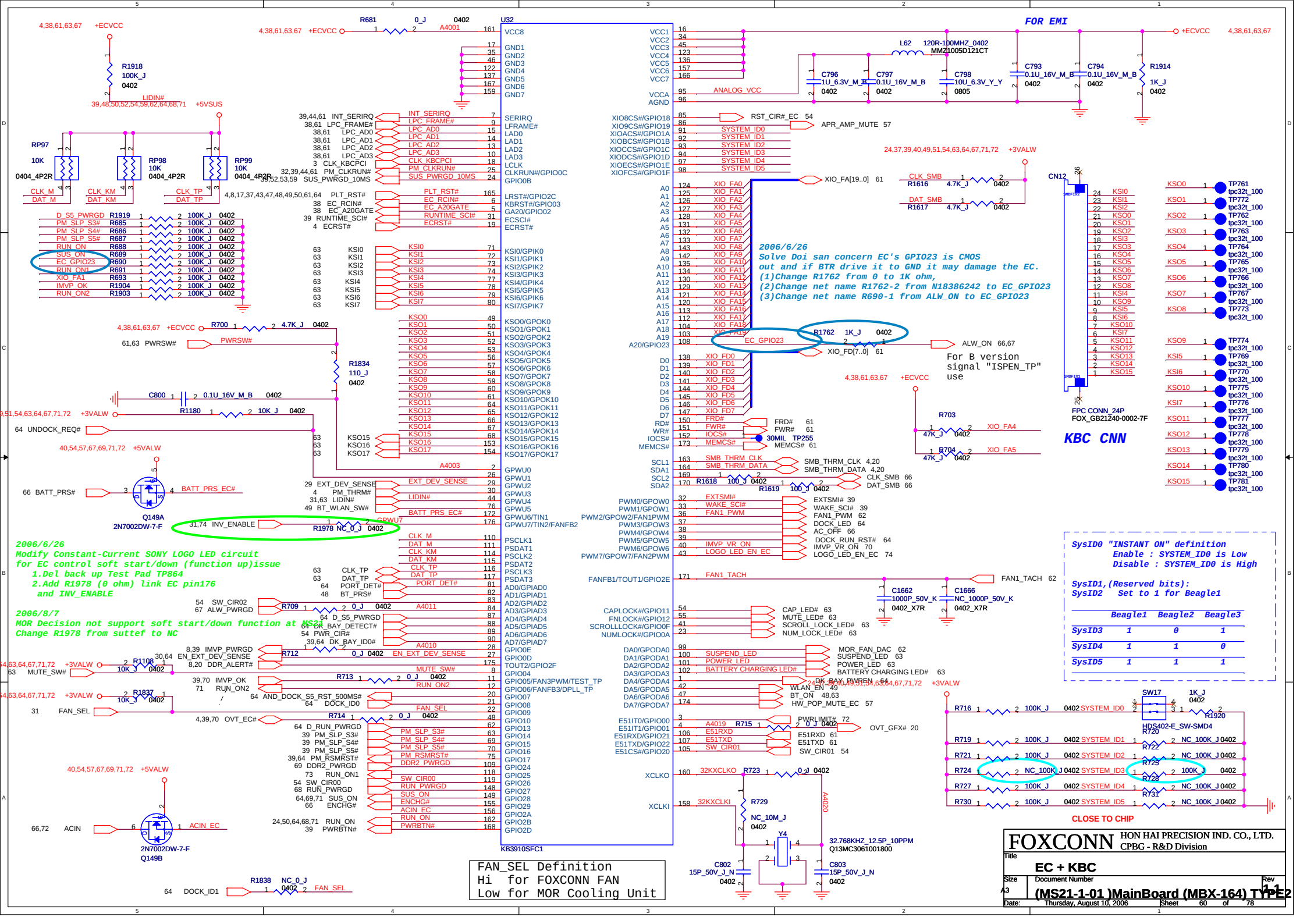
FOR EMI
KBC CNN
U32
KB3910SFC1
FPC CONN_24P
FOX_GB21240-0002-7F
2006/6/26
Solve Doi san concern EC's GPIO23 is CMOS
out and if BTR drive it to GND it may damage the EC.
(1)Change R1762 from 0 to 1K ohm,
(2)Change net name R1762-2 from N18386242 to EC_GPIO23
(3)Change net name R690-1 from ALW_ON to EC_GPIO23
For B version
signal "ISPEN_TP"
use
2006/6/26
Modify Constant-Current SONY LOGO LED circuit
for EC control soft start/down (function up)issue
1.Del back up Test Pad TP864
2.Add R1978 (0 ohm) link EC pin176
and INV_ENABLE
2006/8/7
MOR Decision not support soft start/down function at MS21
Change R1978 from suttef to NC
SysID0 "INSTANT ON" definition
Enable : SYSTEM_ID0 is Low
Disable : SYSTEM_ID0 is High
SysID1,(Reserved bits):
SysID2 Set to 1 for Beagle1
Beagle1 Beagle2 Beagle3
SysID3 1 0 1
SysID4 1 1 0
SysID5 1 1 1
FAN_SEL Definition
Hi for FOXCONN FAN
Low for MOR Cooling Unit
CLOSE TO CHIP
FOXCONN
HON HAI PRECISION IND. CO., LTD.
CPBG - R&D Division
Title
EC + KBC
Size
A3
Document Number
(MS21-1-01)MainBoard (MBX-164) TYPE2
Rev
1.1
Date: Thursday, August 10, 2006
Sheet 60 of 78

FLASH BIOS

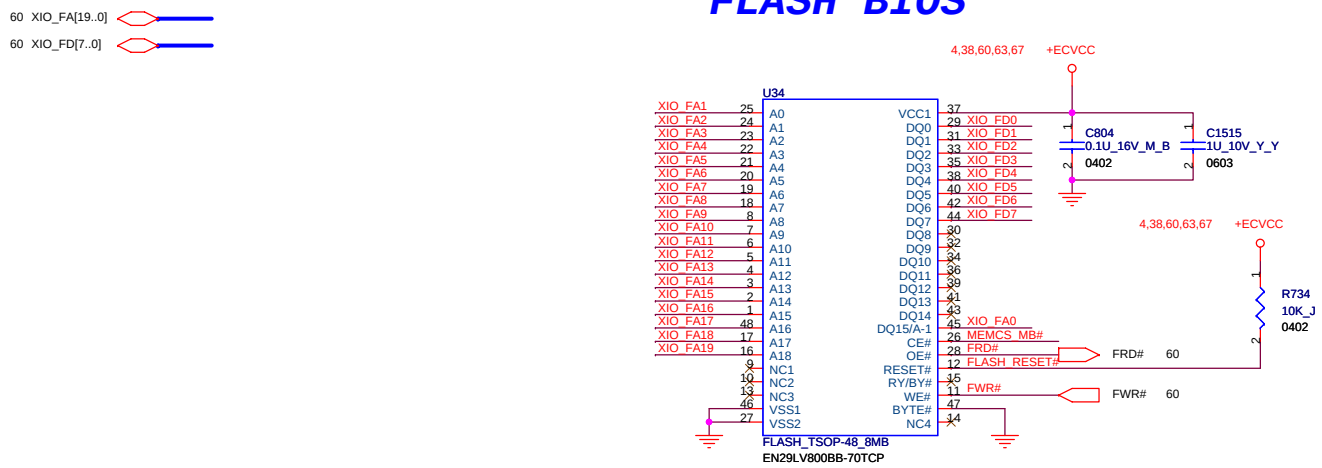

JIG-120

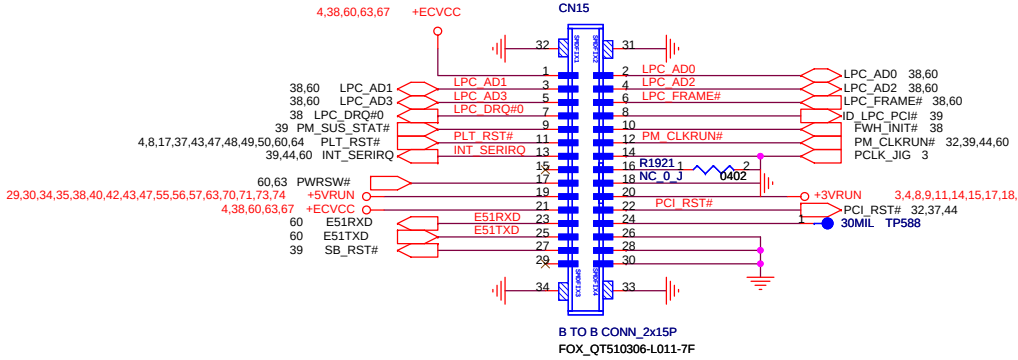

X-BUS

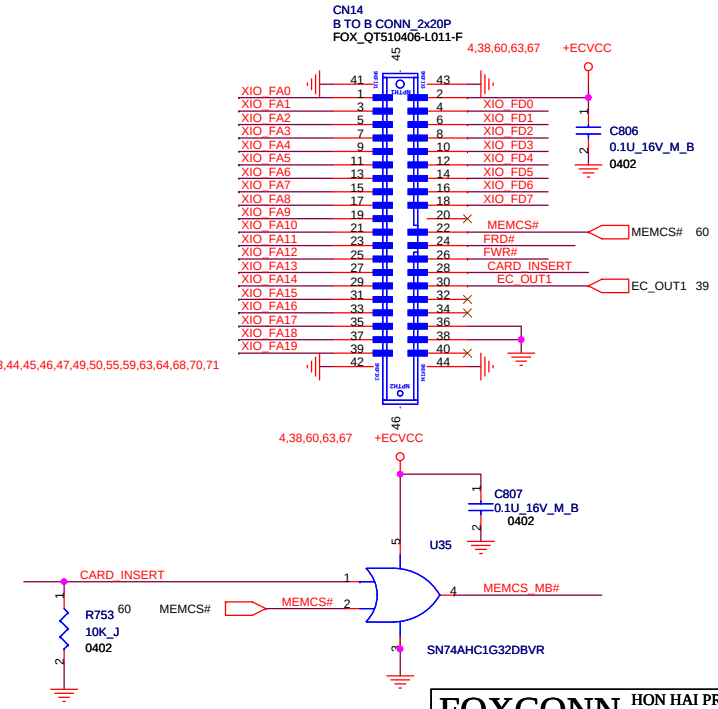

FOXCONN HON HAI PRECISION IND. CO., LTD.
CPBG - R&D Division

Title: Flash ROM + Jig-120 + XBUS

Size: A3 | Document Number: (MS21-1-01)MainBoard (MBX-164) TYPE2 | Rev: 1.1

Date: Thursday, August 10, 2006 | Sheet 61 of 78

FAN(FAN1+MOR FAN)

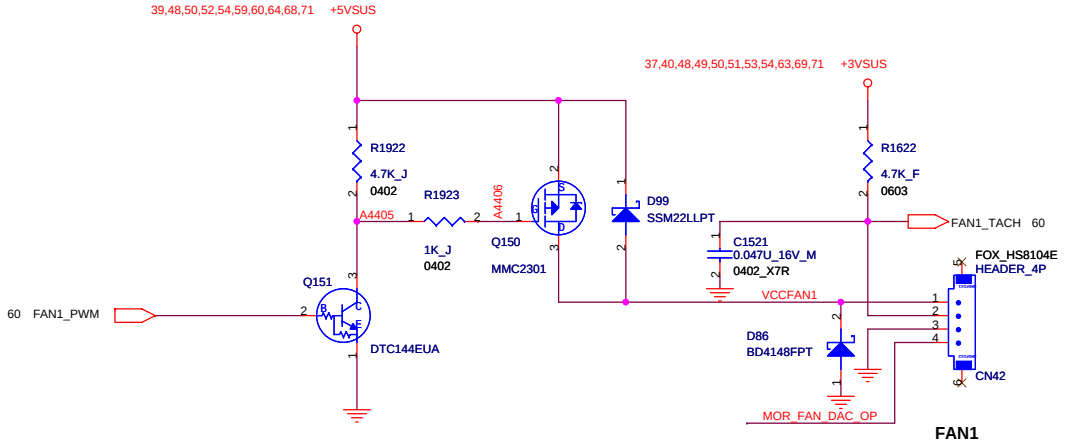

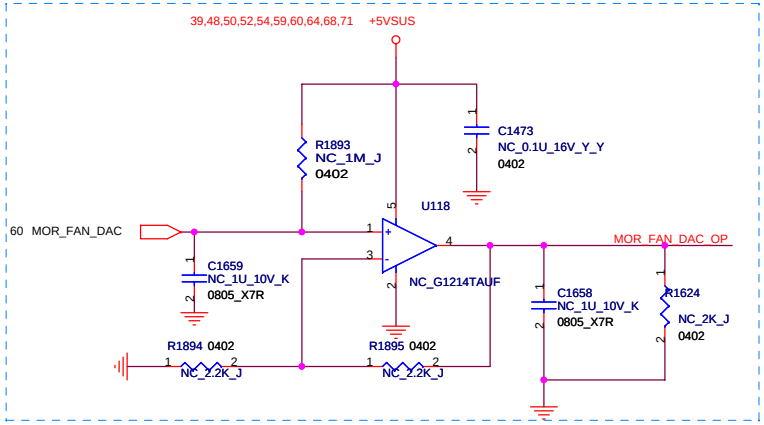

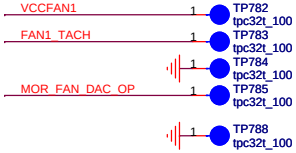

6/28 MOR fan circuit modify to backup
(NC)U118
(NC)R1893
(NC)R1894
(NC)R1895
(NC)R1624
(NC)C1473

FOXCONN	HON HAI PRECISION IND. CO., LTD. CPBG - R&D Division	
Title	FAN	
Size A3	Document Number (MS21-1-01)MainBoard (MBX-164) TYPE 1	Rev 1.1
Date: Thursday, August 10, 2006	Sheet 62 of 78	

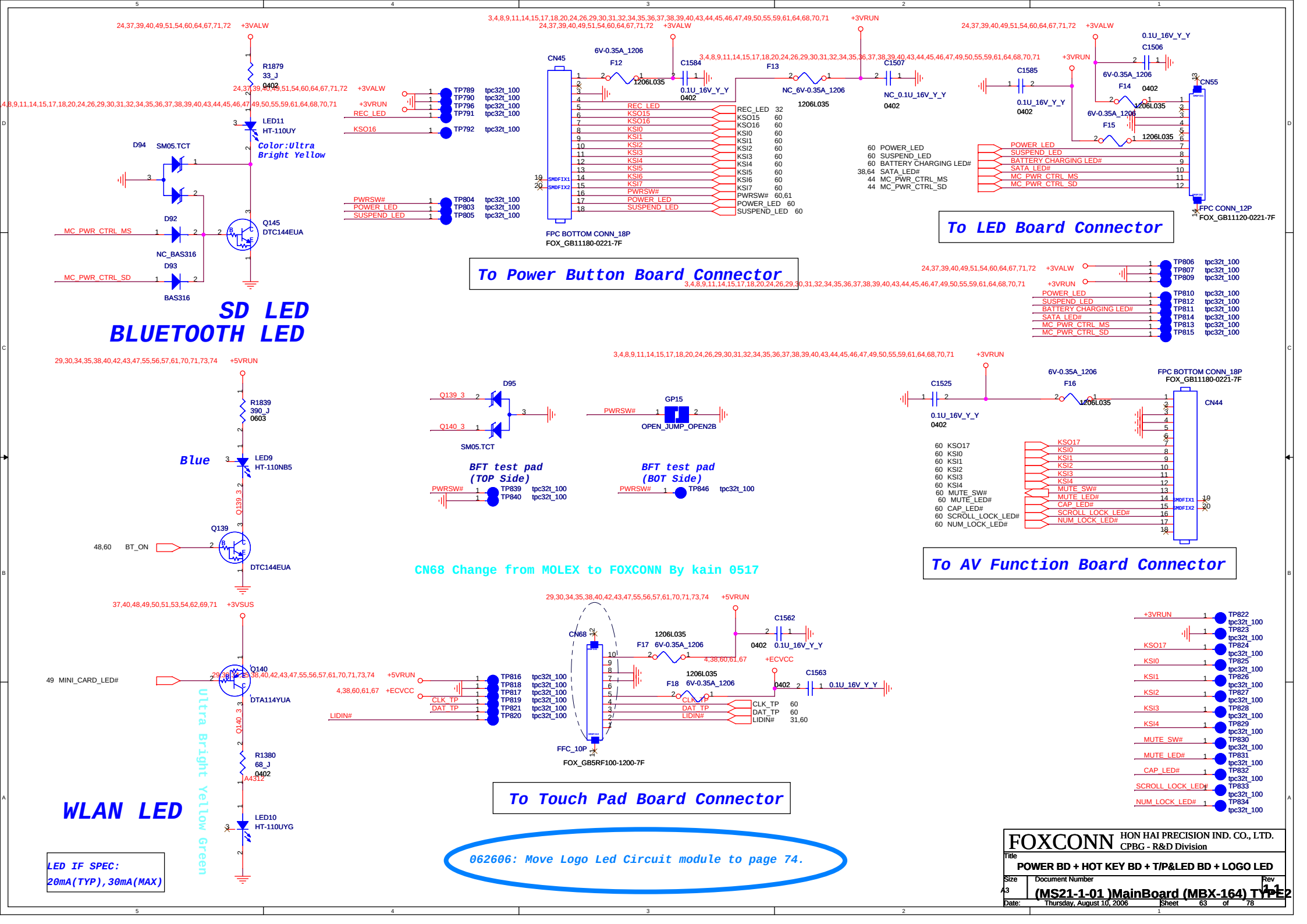
SD LED
BLUETOOTH LED
Color:Ultra Bright Yellow
To Power Button Board Connector
To LED Board Connector
To AV Function Board Connector
To Touch Pad Board Connector
CN68 Change from MOLEX to FOXCONN By kain 0517
Blue
WLAN LED
Ultra Bright Yellow Green
LED IF SPEC:
20mA(TYP),30mA(MAX)
062606: Move Logo Led Circuit module to page 74.
FOXCONN
HON HAI PRECISION IND. CO., LTD.
CPBG - R&D Division
POWER BD + HOT KEY BD + T/P&LED BD + LOGO LED
(MS21-1-01)MainBoard (MBX-164) TYPE2
Size A3
Rev 1.1
Date: Thursday, August 10, 2006
Sheet 63 of 78

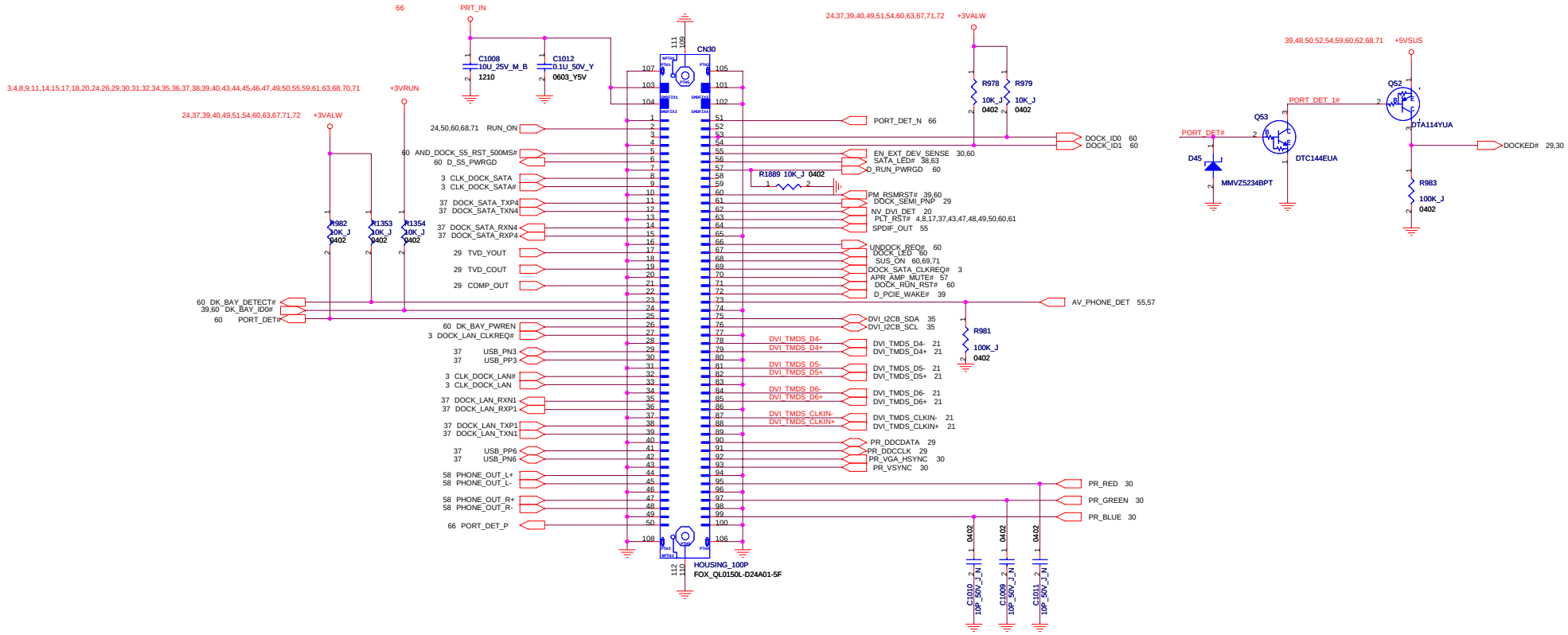

FOXCONN	HON HAI Precision Ind. Co., Ltd. CCPBG - R&D Division		
Title	DOCKING CONN.		
Size C	Document Number (MS21-1-01)MainBoard (MBX-164) TYPE2		Rev 1.1
Date: Thursday, August 10, 2006	Sheet 64 of 78		

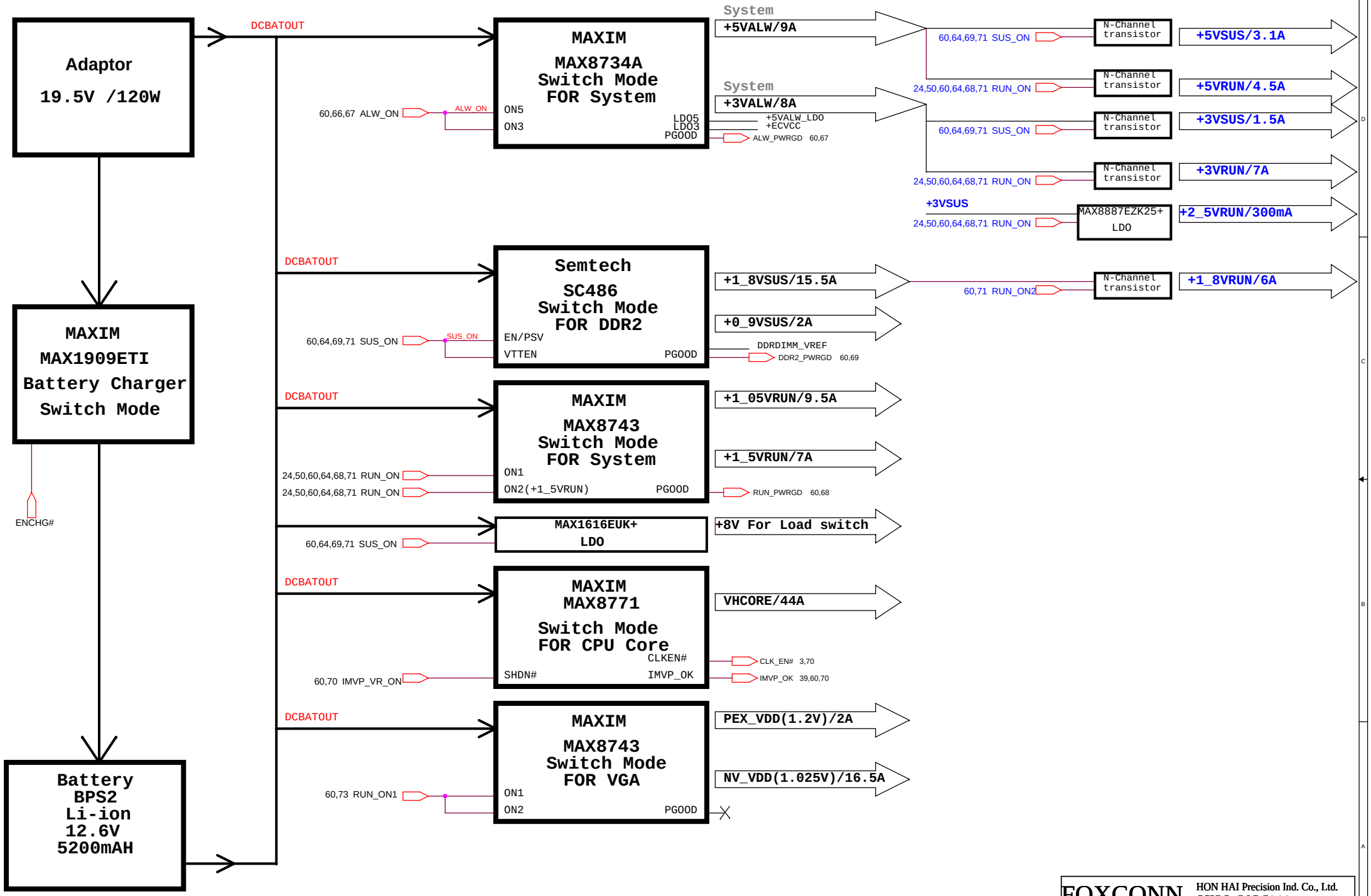

FOXCONN	HON HAI Precision Ind. Co., Ltd. CCPBG - R&D Division		
Title	Power Design Diagram-ZG		
Size A3	Document Number (MS21-1-01)MainBoard (MBX-164) TYPE2		Rev 1.1
Date: Thursday, August 10, 2006	Sheet 65 of 78		

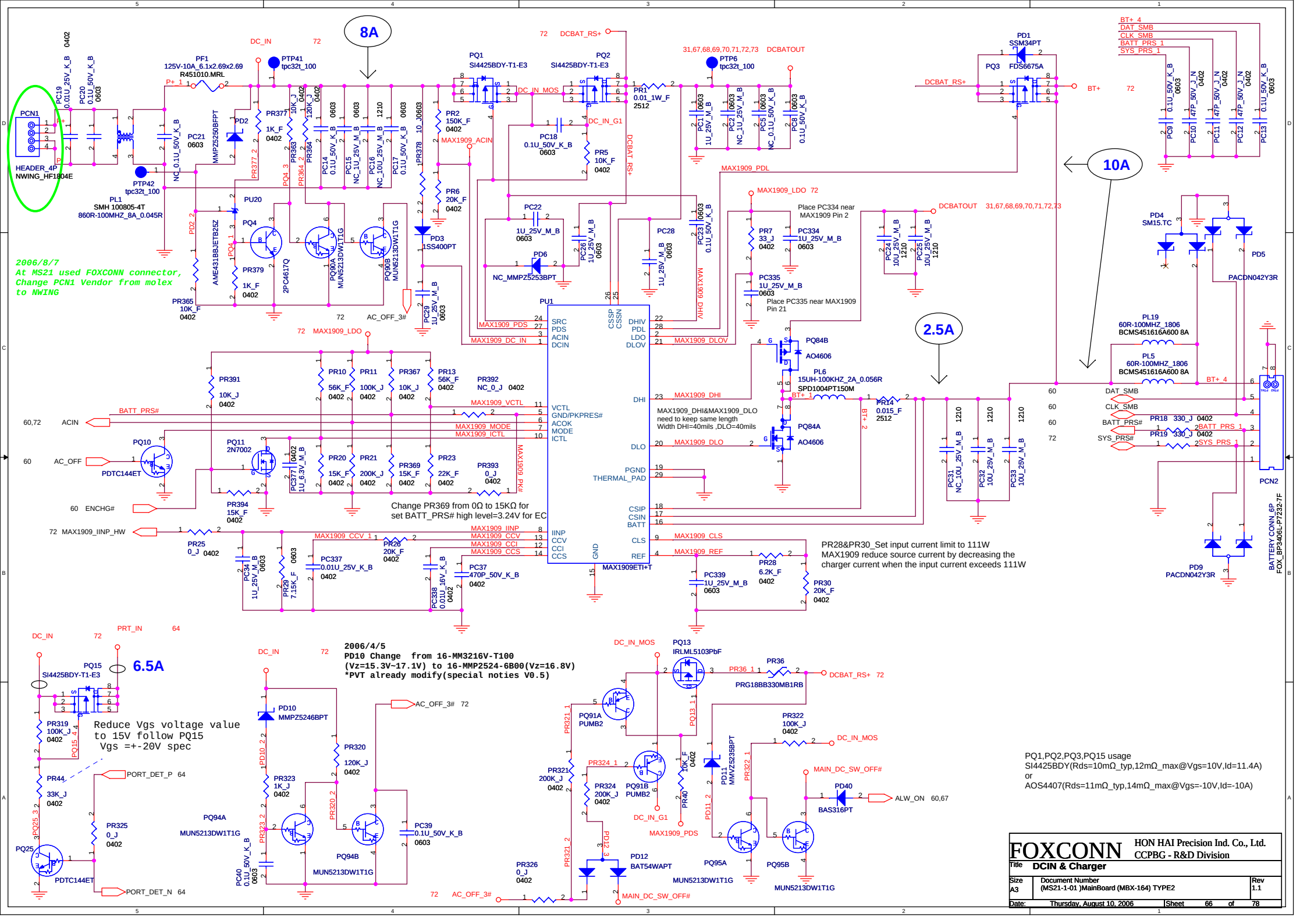

8A
10A
2.5A
6.5A
PCN1
HEADER_4P
NWING_HF1804E
PF1
125V-10A_6.1x2.69x2.69
R451010.MRL
PTP41
tpc32t_100
PTP42
tpc32t_100
PL1
SMH 100805-4T
860R-100MHZ_8A_0.045R
PU20
AME431BJETB25Z
PQ4
2PC4617Q
PQ90A
MUN5213DW1T1G
PQ90B
MUN5213DW1T1G
PD2
MMPZ5250BFPT
PD3
1SS400PT
PQ1
SI4425BDY-T1-E3
PQ2
SI4425BDY-T1-E3
PTP6
tpc32t_100
PD6
NC_MMPZ5253BPT
PU1
MAX1909EETI+T
PQ84B
AO6606
PQ84A
AO6606
PL6
15UH-100KHZ_2A_0.056R
SPD1004PT150M
PD1
SSM34PT
PQ3
FDS6675A
PD4
SM15.TC
PD5
PACDN042Y3R
PL19
60R-100MHZ_1806
BCMS451616A600 8A
PL5
60R-100MHZ_1806
BCMS451616A600 8A
PCN2
BATTERY CONN_6P
FOX_BP3406L-P7232-7F
PD9
PACDN042Y3R
PQ10
PDTC144ET
PQ11
2N7002
PQ25
PDTC144ET
PQ15
SI4425BDY-T1-E3
PD10
MMPZ5246BPT
PQ94A
MUN5213DW1T1G
PQ94B
MUN5213DW1T1G
PQ13
IRLML5103PbF
PQ91A
PUMB2
PQ91B
PUMB2
PD11
MMVZ5235BPT
PD12
BAT54WAPT
PQ95A
MUN5213DW1T1G
PQ95B
MUN5213DW1T1G
PD40
BAS316PT
2006/8/7
At MS21 used FOXCONN connector,
Change PCN1 Vendor from molex
to NWING
Place PC334 near
MAX1909 Pin 2
Place PC335 near MAX1909
Pin 21
MAX1909_DHI&MAX1909_DLO
need to keep same length
Width DHI=40mils ,DLO=40mils
Change PR369 from 0Ω to 15KΩ for
set BATT_PRS# high level=3.24V for EC
PR28&PR30_Set input current limit to 111W
MAX1909 reduce source current by decreasing the
charger current when the input current exceeds 111W
2006/4/5
PD10 Change from 16-MM3216V-T100
(Vz=15.3V~17.1V) to 16-MMP2524-6B00(Vz=16.8V)
*PVT already modify(special noties V0.5)
Reduce Vgs voltage value
to 15V follow PQ15
Vgs =+-20V spec
PQ1,PQ2,PQ3,PQ15 usage
SI4425BDY(Rds=10mΩ_typ,12mΩ_max@Vgs=10V,Id=11.4A)
or
AOS4407(Rds=11mΩ_typ,14mΩ_max@Vgs=-10V,Id=-10A)
FOXCONN
HON HAI Precision Ind. Co., Ltd.
CCPBG - R&D Division
Title DCIN & Charger
Size A3
Document Number (MS21-1-01)MainBoard (MBX-164) TYPE2
Rev 1.1
Date: Thursday, August 10, 2006
Sheet 66 of 78

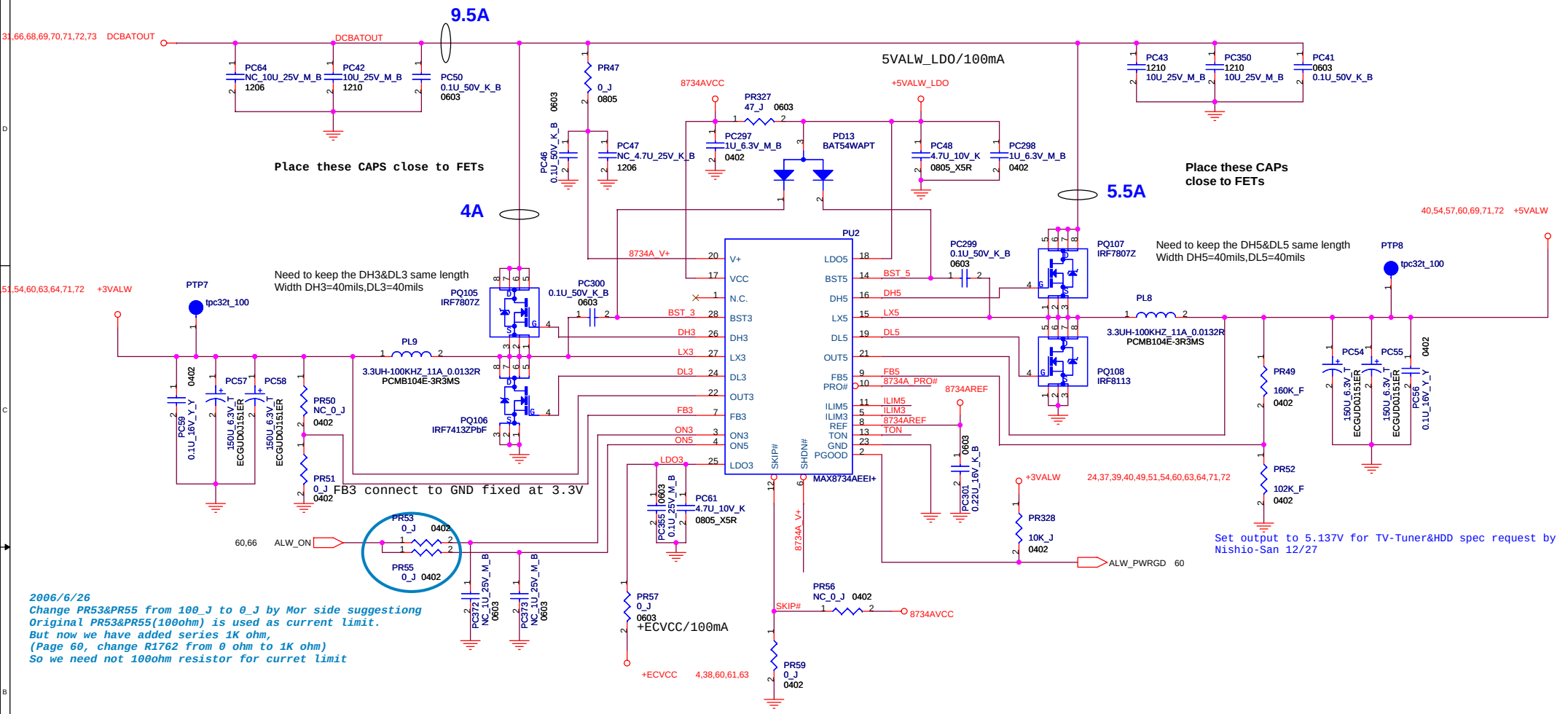

2006/6/26
Change PR53&PR55 from 100_J to 0_J by Mor side suggestiong
Original PR53&PR55(100ohm) is used as current limit.
But now we have added series 1K ohm,
(Page 60, change R1762 from 0 ohm to 1K ohm)
So we need not 100ohm resistor for curret limit

+3VALW Notice:
Output capacitor
ECGUD0J151ER(18 mohm,H=2.8mm)
6TPE150M(25 mohm,H=1.8mm)

MOSFET
Top_IRF7807Z(Total Qg=11nc_max)
Bottom_IRF7413Z(Rds=10.5mΩ_typ&13mΩ_ max.@Vgs=4.5V,Id=10A)
or
Top_SI4892DY(Total Qg=10.5nc_max)
Bottom_SI4392DY(Rds=11mΩ_typ&13.75mΩ_ max.@Vgs=4.5V,Id=10A)

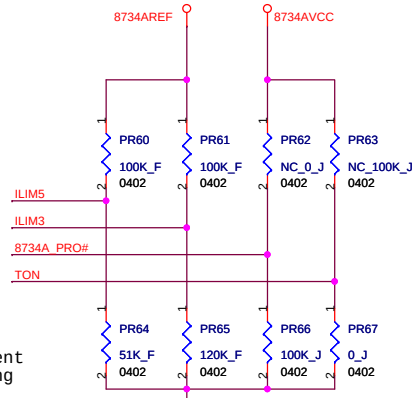

Adjust Current
Limit setting

5V LIMIT@11A(11.4~14.1A)
3V LIMIT@10.5A(10.2~12.7A)

TON connect to GND = 5V/400KHZ,3.3V/500KHZ

+5VALW Notice:
Output capacitor
ECGUD0J151ER(18 mohm,H=2.8mm)
6TPE150M(25 mohm,H=1.8mm)

MOSFET
Top_IRF7807Z(Total Qg=11.5nc_max)
Bottom_IRF8113(Rds=5.8mΩ_typ,6.8mΩ_max@Vgs=4.5V,Id=13.8A)
or
Top_SI4892DY(Total Qg=10nc_max)
Bottom_SI4856ADY(Rds=6.3mΩ_typ,7.6mΩ_max@Vgs=4.5V,Id=14A)

FOXCONN	HON HAI Precision Ind. Co., Ltd. CCPBG - R&D Division	
Title	System Power 3.3V&5V	
Size A3	Document Number (MS21-1-01)MainBoard (MBX-164) TYPE2	Rev 1.1
Date: Thursday, August 10, 2006	Sheet 67 of 78	

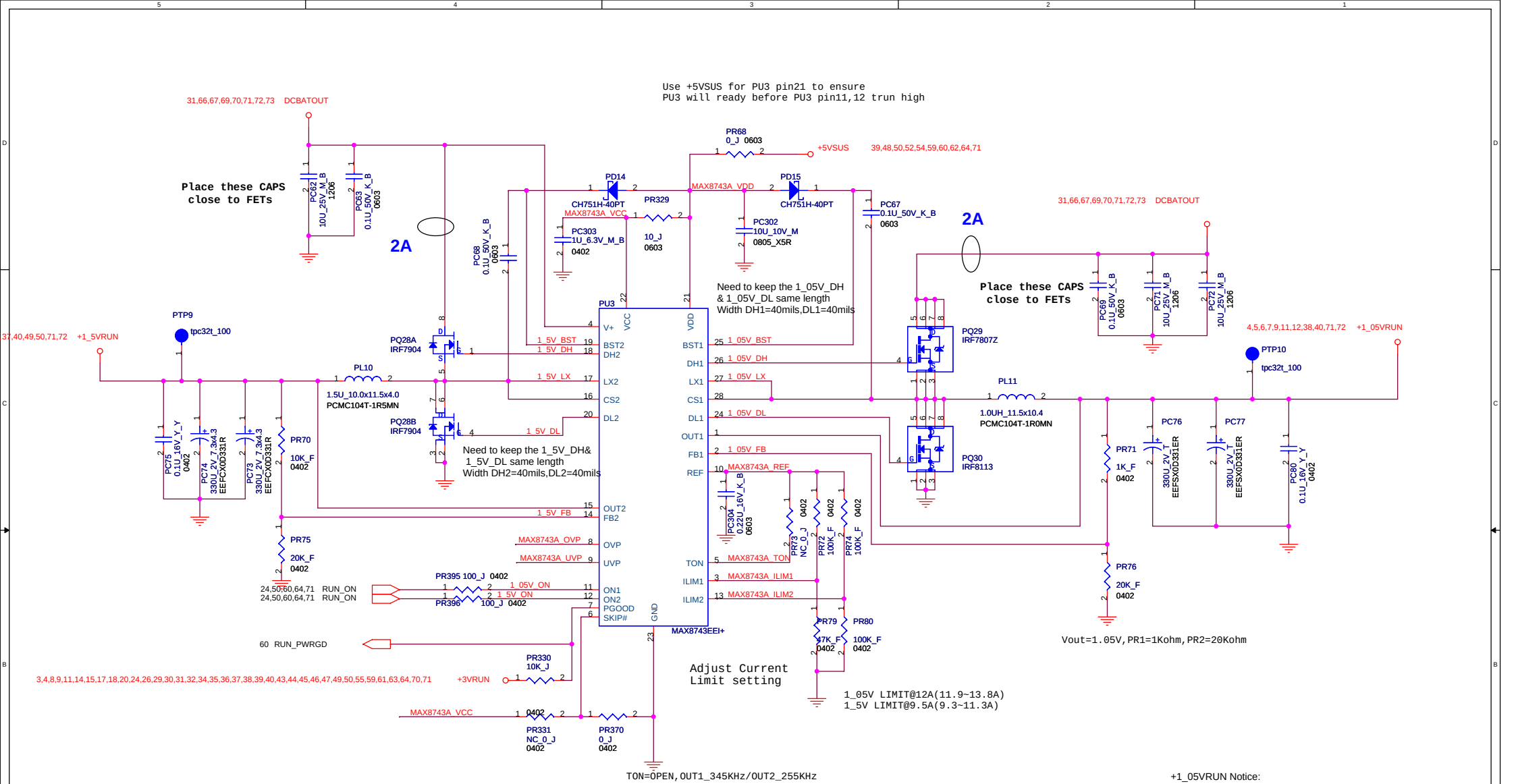

+1_5VRUN Notice:
Output capacitor
EEFCX0D331R(ESR=15 mohm,H=1.9mm,Arms=2.7A)
2R5TPE330MF(ESR=15 mohm,H=1.8mm,Arms=3.1A)

MOSFET(Top+Bottom)
IRF7904(Low side Rds=10.5mΩ_typ,13mΩ_max@Vgs=4.5V,Id=8.9A)

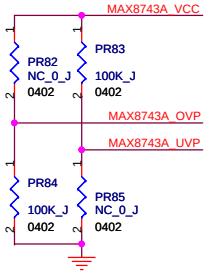

+1_05VRUN Notice:
Output capacitor usage
EEFSX0D331ER(ESR=9mohm,H=1.9mm,Arms=3.0A)
2R5TPE330M9(ESR=9mohm,H=1.8mm,Arms=3.9A)

MOSFET
Top_IRF7807Z(Total Qg=11.5nc_max)
Bottom_IRF8113(Rds=5.8mΩ_typ,6.8mΩ_max@Vgs=4.5V,Id=13.8A)
or
Top_SI4892DY(Total Qg=10nc_max)
Bottom_SI4856ADY(Rds=6.3mΩ_typ,7.6mΩ_max@Vgs=4.5V,Id=14A)

FOXCONN	HON HAI Precision Ind. Co., Ltd. CCPBG - R&D Division	
Title	1.5V/1.05V	
Size A3	Document Number (MS21-1-01)MainBoard (MBX-164) TYPE2	Rev 1.1
Date: Thursday, August 10, 2006	Sheet 68 of 78	

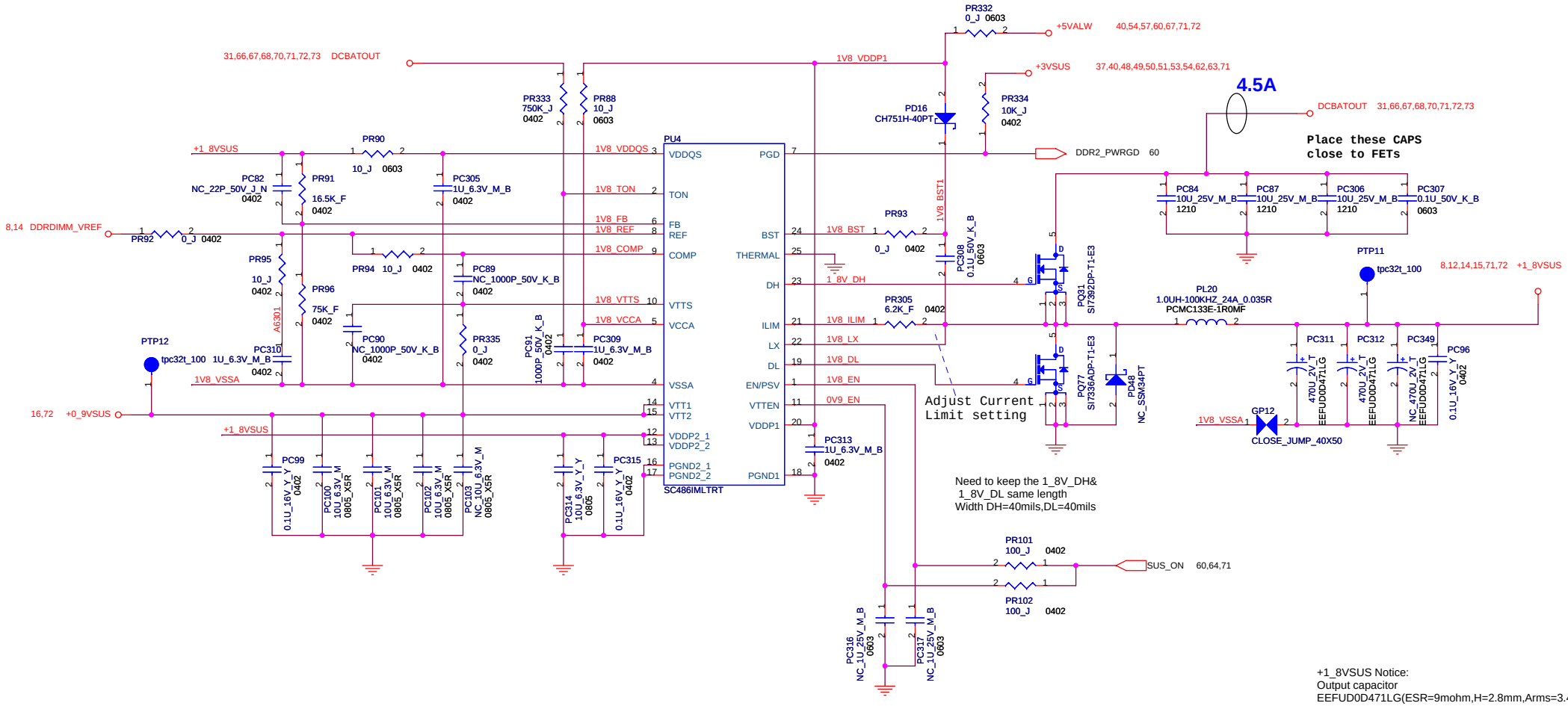

+1_8VSUS Notice:
Output capacitor
EEFUD0D471LG(ESR=9mohm,H=2.8mm,Arms=3.4A)
2R5TPE470M9(ESR=9mohm,H=1.8mm,Arms=3.9A)

MOSFET
Top_SI7392DP(Total Qg=15nc_max)
Bottom_SI7336ADP(Rds=3.1mΩ_typ,4.0mΩ_max@19A)
or
Top_NTMFS4707N(Total Qg=15nc_max)
Bottom_NTMFS4119N(Rds=3.1mΩ_typ,4.8mΩ_max@25A)

1_8V LIMIT@20A(19.2~24A)

FOXCONN	HON HAI Precision Ind. Co., Ltd. CCPBG - R&D Division	
Title	DDRII 1.8V/0.9V	
Size A3	Document Number (MS21-1-01)MainBoard (MBX-164) TYPE2	Rev 1.1
Date: Thursday, August 10, 2006	Sheet 69 of 78	

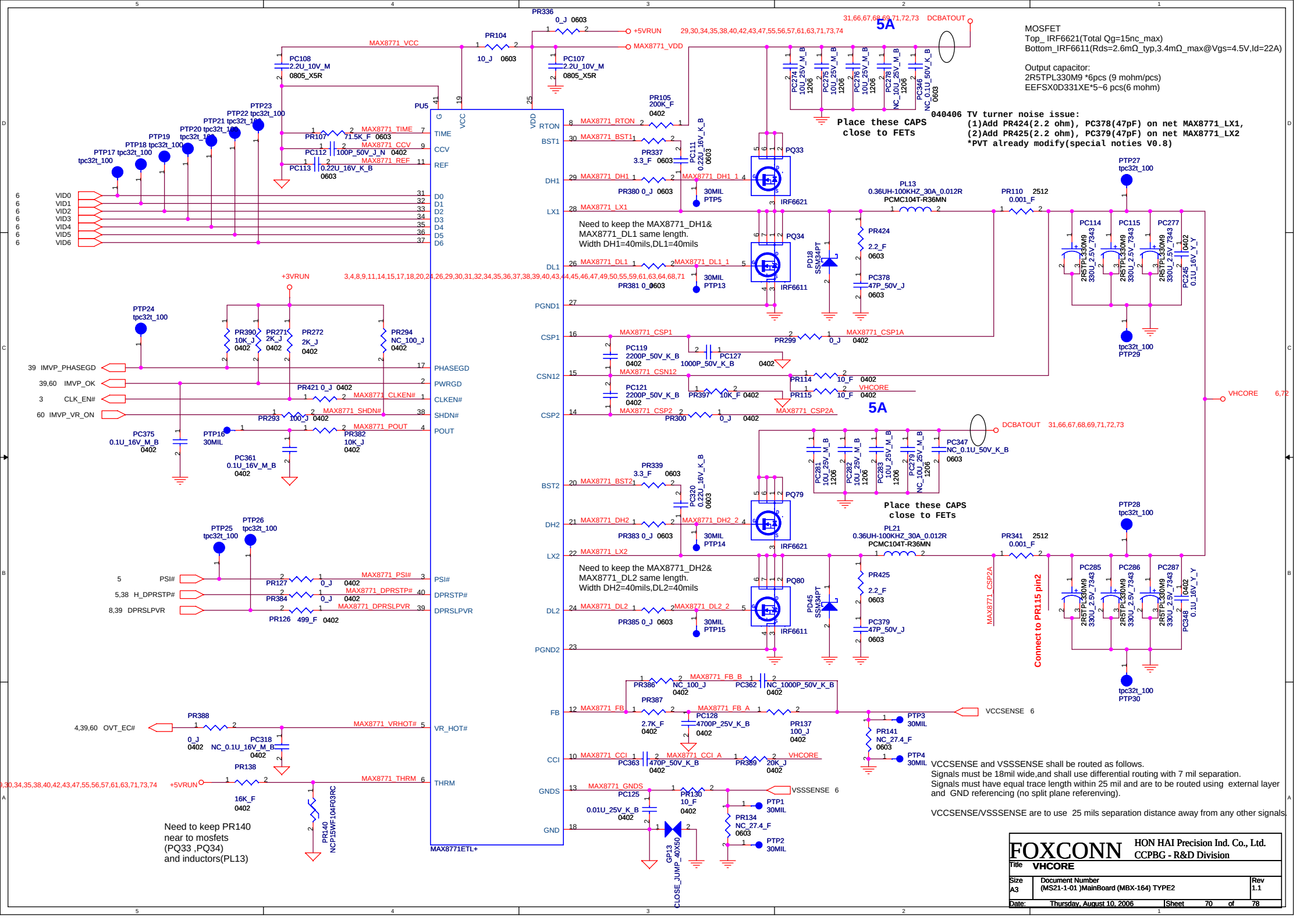
MOSFET
Top_ IRF6621(Total Qg=15nc_max)
Bottom_IRF6611(Rds=2.6mΩ_typ,3.4mΩ_max@Vgs=4.5V,Id=22A)
Output capacitor:
2R5TPL330M9 *6pcs (9 mohm/pcs)
EEFSX0D331XE*5~6 pcs(6 mohm)
040406 TV turner noise issue:
(1)Add PR424(2.2 ohm), PC378(47pF) on net MAX8771_LX1,
(2)Add PR425(2.2 ohm), PC379(47pF) on net MAX8771_LX2
*PVT already modify(special noties V0.8)
Place these CAPS close to FETs
Need to keep the MAX8771_DH1& MAX8771_DL1 same length. Width DH1=40mils,DL1=40mils
Need to keep the MAX8771_DH2& MAX8771_DL2 same length. Width DH2=40mils,DL2=40mils
Connect to PR115 pin2
Need to keep PR140 near to mosfets (PQ33 ,PQ34) and inductors(PL13)
VCCSENSE and VSSSENSE shall be routed as follows.
Signals must be 18mil wide,and shall use differential routing with 7 mil separation.
Signals must have equal trace length within 25 mil and are to be routed using external layer and GND referencing (no split plane referenving).
VCCSENSE/VSSSENSE are to use 25 mils separation distance away from any other signals.
FOXCONN
HON HAI Precision Ind. Co., Ltd.
CCPBG - R&D Division
Title VHCORE
Size A3
Document Number (MS21-1-01)MainBoard (MBX-164) TYPE2
Rev 1.1
Date: Thursday, August 10, 2006
Sheet 70 of 78

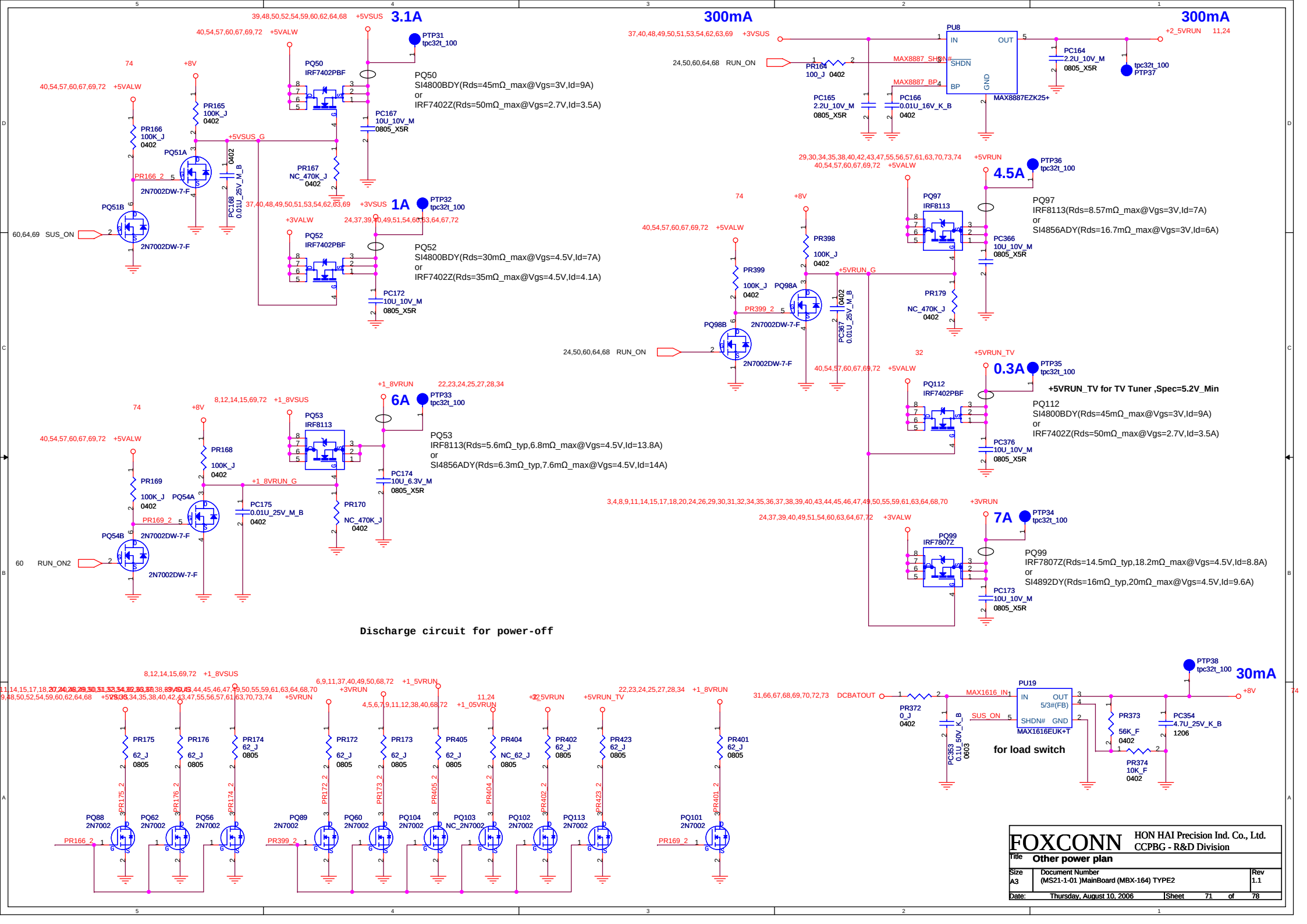
3.1A
300mA
300mA
PTP31 tpc32t_100
PQ50 IRF7402PBF
PQ50 SI4800BDY(Rds=45mΩ_max@Vgs=3V,Id=9A) or IRF7402Z(Rds=50mΩ_max@Vgs=2.7V,Id=3.5A)
PQ51A 2N7002DW-7-F
PQ51B 2N7002DW-7-F
60,64,69 SUS_ON
1A
PTP32 tpc32t_100
PQ52 IRF7402PBF
PQ52 SI4800BDY(Rds=30mΩ_max@Vgs=4.5V,Id=7A) or IRF7402Z(Rds=35mΩ_max@Vgs=4.5V,Id=4.1A)
6A
PTP33 tpc32t_100
PQ53 IRF8113
PQ53 IRF8113(Rds=5.6mΩ_typ,6.8mΩ_max@Vgs=4.5V,Id=13.8A) or SI4856ADY(Rds=6.3mΩ_typ,7.6mΩ_max@Vgs=4.5V,Id=14A)
PQ54A 2N7002DW-7-F
PQ54B 2N7002DW-7-F
60 RUN_ON2
PU8 MAX8887EZK25+
24,50,60,64,68 RUN_ON
PTP37 tpc32t_100
4.5A
PTP36 tpc32t_100
PQ97 IRF8113
PQ97 IRF8113(Rds=8.57mΩ_max@Vgs=3V,Id=7A) or SI4856ADY(Rds=16.7mΩ_max@Vgs=3V,Id=6A)
PQ98A 2N7002DW-7-F
PQ98B 2N7002DW-7-F
24,50,60,64,68 RUN_ON
0.3A
PTP35 tpc32t_100
+5VRUN_TV for TV Tuner ,Spec=5.2V_Min
PQ112 IRF7402PBF
PQ112 SI4800BDY(Rds=45mΩ_max@Vgs=3V,Id=9A) or IRF7402Z(Rds=50mΩ_max@Vgs=2.7V,Id=3.5A)
7A
PTP34 tpc32t_100
PQ99 IRF7807Z
PQ99 IRF7807Z(Rds=14.5mΩ_typ,18.2mΩ_max@Vgs=4.5V,Id=8.8A) or SI4892DY(Rds=16mΩ_typ,20mΩ_max@Vgs=4.5V,Id=9.6A)
Discharge circuit for power-off
PU19 MAX1616EUK+T
for load switch
30mA
PTP38 tpc32t_100
PQ88 2N7002
PQ62 2N7002
PQ56 2N7002
PQ89 2N7002
PQ60 2N7002
PQ104 2N7002
PQ103 NC_2N7002
PQ102 2N7002
PQ113 2N7002
PQ101 2N7002
FOXCONN
HON HAI Precision Ind. Co., Ltd.
CCPBG - R&D Division
Title Other power plan
Size A3
Document Number (MS21-1-01)MainBoard (MBX-164) TYPE2
Rev 1.1
Date: Thursday, August 10, 2006
Sheet 71 of 78

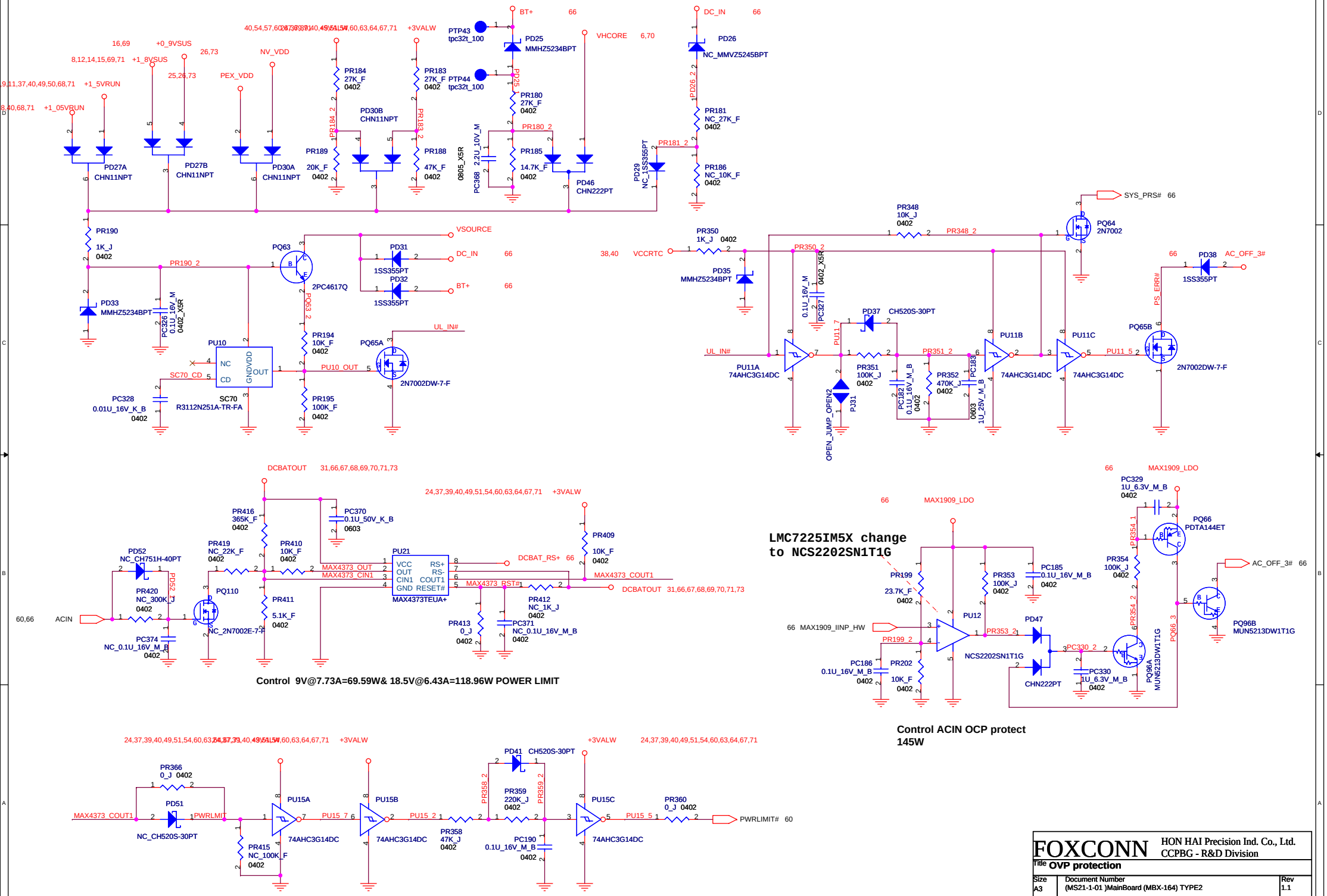

FOXCONN	HON HAI Precision Ind. Co., Ltd. CCPBG - R&D Division	
Title	OVP protection	
Size A3	Document Number (MS21-1-01)MainBoard (MBX-164) TYPE2	Rev 1.1
Date: Thursday, August 10, 2006	Sheet 72 of 78	

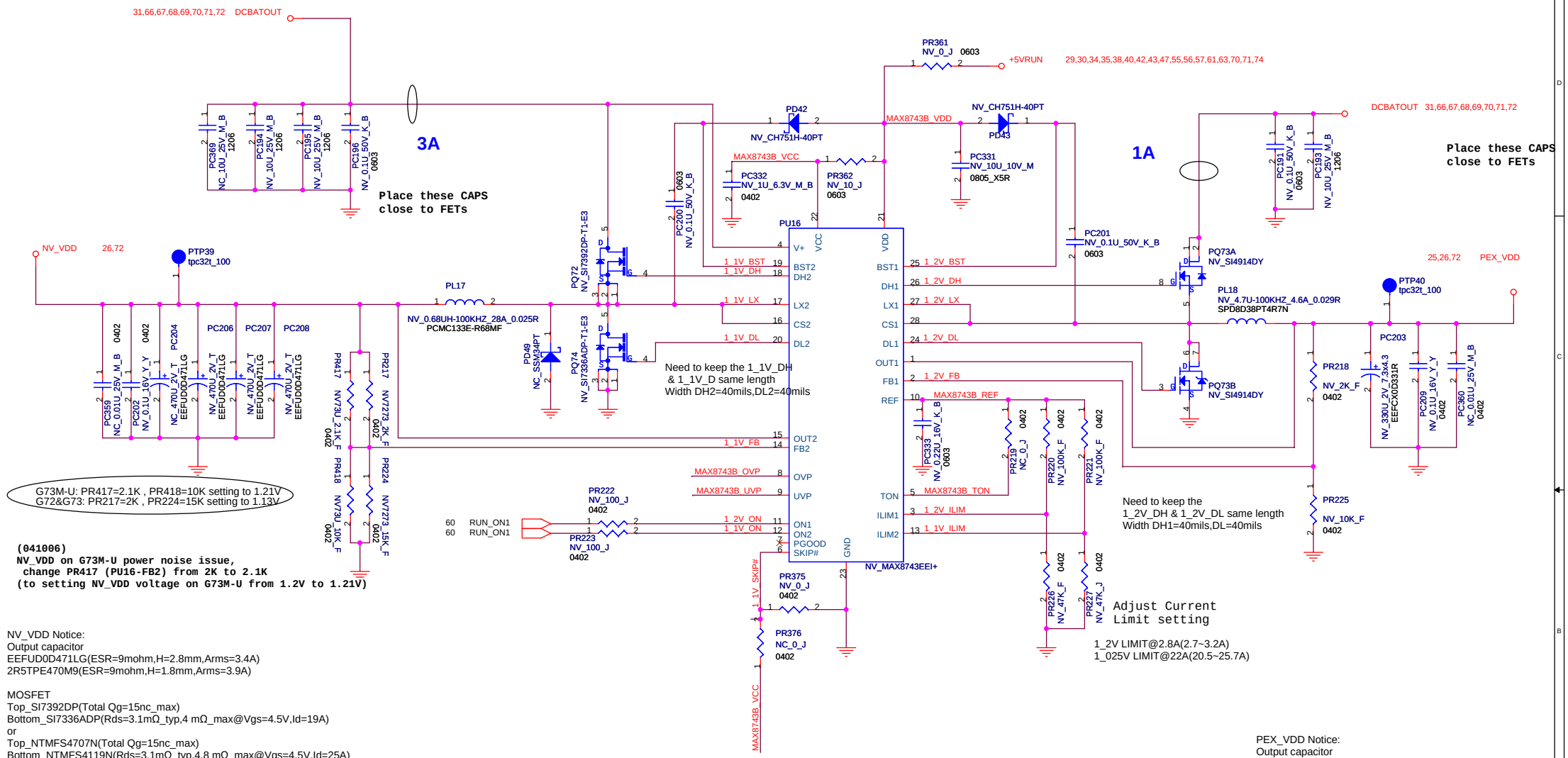

(041006)
NV_VDD on G73M-U power noise issue,
change PR417 (PU16-FB2) from 2K to 2.1K
(to setting NV_VDD voltage on G73M-U from 1.2V to 1.21V)

NV_VDD Notice:
Output capacitor
EEFUD0D471LG(ESR=9mohm,H=2.8mm,Arms=3.4A)
2R5TPE470M9(ESR=9mohm,H=1.8mm,Arms=3.9A)

MOSFET
Top_SI7392DP(Total Qg=15nc_max)
Bottom_SI7336ADP(Rds=3.1mΩ_typ,4 mΩ_max@Vgs=4.5V,Id=19A)
or
Top_NTMFS4707N(Total Qg=15nc_max)
Bottom_NTMFS4119N(Rds=3.1mΩ_typ,4.8 mΩ_max@Vgs=4.5V,Id=25A)

PEX_VDD Notice:
Output capacitor
EEFCX0D331R(ESR=15mohm,H=1.9mm,Arms=2.7A)
2R5TPE330MF(ESR=15mohm,H=1.8mm,Arms=3.1A)

Top+Bottom side (Dual N MOSFET)
SI4914DY(Rds=22mΩ_typ,27mΩ_max@Vgs=4.5V,Id=6.4A)

FOXCONN	HON HAI Precision Ind. Co., Ltd. CCPBG - R&D Division	
Title	+1_2VRUN&+1_025VRUN	
Size A3	Document Number (MS21-1-01)MainBoard (MBX-164) TYPE2	Rev 1.1
Date: Thursday, August 10, 2006	Sheet 73 of 78	

2006/6/26
Modify Constant-Current SONY LOGO LED circuit
A for U138 cost issue
1.Back up:U138(MAX1916EZT),R1936 (91K ohm,0402),R1982(0R,NC),R1983(0R,NC)
2.Remove back up solution U139(GMT,G5920TB1Uf),C1660(0.1u)
3.Add new Constant-Current circuit (OP + MOS)
51K ohm: R1972 ,
1.2K ohm: R1973 ,
1k ohm:R1974 ,
10 ohm: R1975
(NC)0 ohm: R1976(for back up U138 MAX1916)
0.1uF,16V: C1679
(NC)22uF,6.3V: C1680
OP LM358 ADR : U139
N-MOS 2N7002: Q158
N-MOS DTA114YUA:Q159
P-MOS DTC144EUA:Q160

B for EC control soft start/down (function up)issue
1.Del R1948(back up LOGO_LED_EN_EC to U126 pin1)
2.Serial (Back up) R1981 between INV_ENABLE to U126 pin2
3.Move net LOGO_LED_EN_EC from R1948 pin1 to R1980 pin1
4.Add R1977 between +5VRUN to U126 pin5(VCC)
5.Add R1980 between Logo_led_en_ec to U126 pin2

Constant-Current SONY LOGO LED

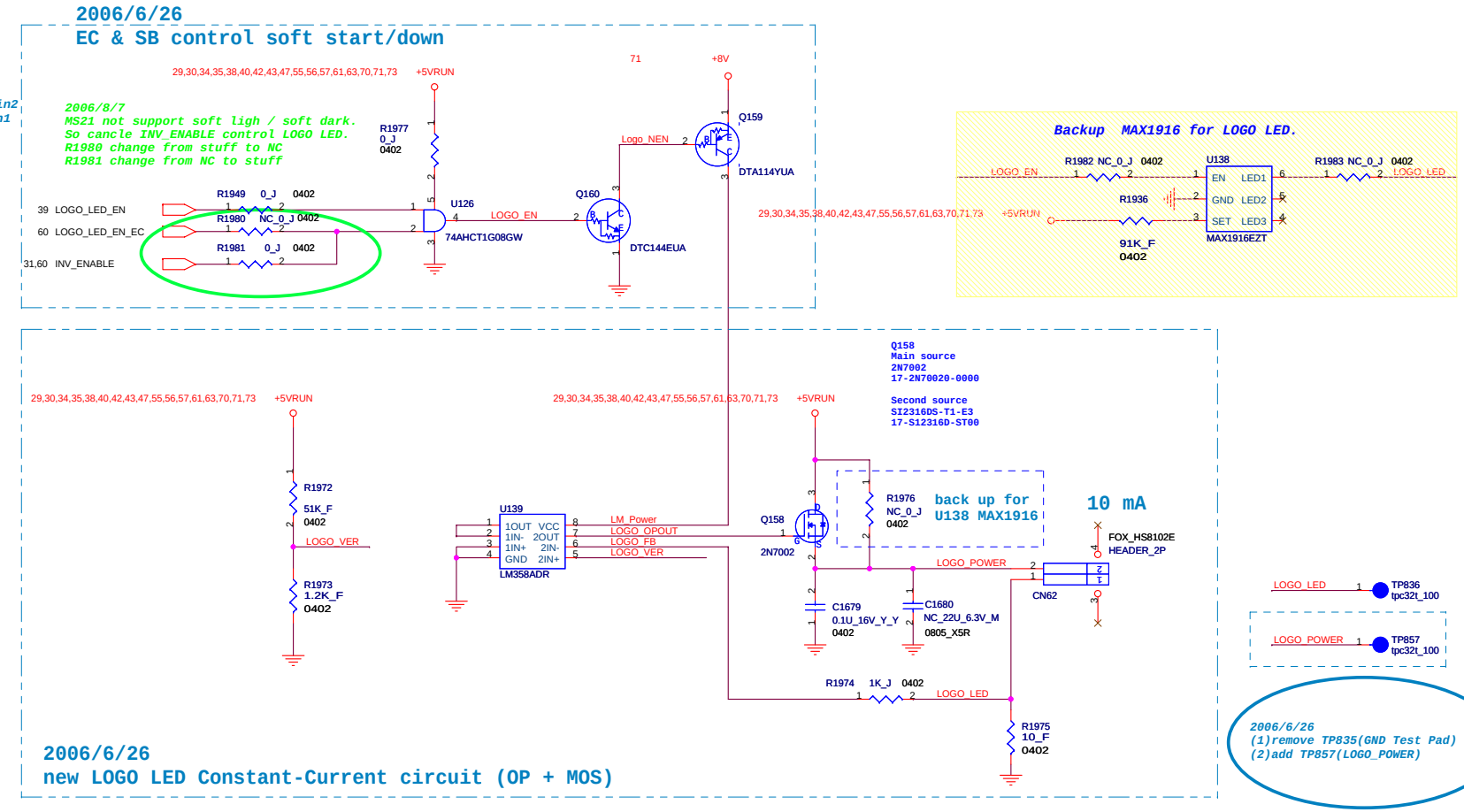

2006/6/26
(1)remove TP835(GND Test Pad)
(2)add TP857(LOGO_POWER)

2006/6/26
(Del inverter boost circuit , after change ,the inverter circuit is the same with MS20 MP)
Detail location
10U_25V_M*9pcs(PC380,PC381,PC382,PC383,PC384,PC385,PC386,PC389,PC390),
0.01U_25V_K*1pcs(PC387),1U_25V_M*1pcs(PC388),0.22U_16V_M*1pcs(PC391),
220P_50V_K*1pcs(PC392),SKS30-04AT-G*1pcs(PD53),8UH-100KHZ_2.5A_0.07R*1pcs(PL22),
2N7002*2pcs(PQ9114,PQ116),FDS6680A*1pcs(PQ117),120K_F*1pcs(PR432),
0.03_F*1pcs(PR434)95.3K_F*1pcs(PR435),10K_F*1pcs(PR436),MAX668EUB+T*1pcs(PU22),

FOXCONN	HON HAI Precision Ind. Co., Ltd. CCPBG - R&D Division	
Title	Logo LED	
Size Custom	Document Number (MS21-1-01)MainBoard (MBX-164) TYPE2	Rev 1.1
Date: Thursday, August 10, 2006	Sheet 74 of 78	

HOLE

Type 1

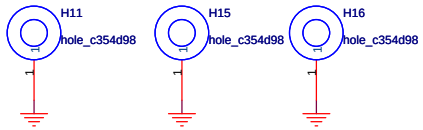

Type 2

2005/10/24
Remove Screw Hole H2 P/N 1X-HOLE000-0108
beacuse the Hole overlay with CN32 and layout will
modify component screw shipe

Type 3

2005/10/24
Remove Screw Hole H1 P/N 1X-HOLE000-0110
beacuse the Hole overlay with CN32 and layout will
modify component screw shipe

2006/5/6
Separet analog ground for digital Noise issue:
Isolate screw hole H4 Change H4 net name from
A_GND to A_ISOLATE

Type 4

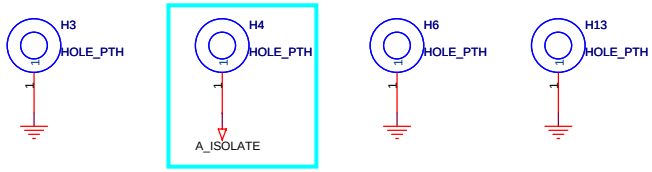

Type 5

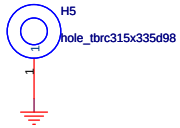

Type 6

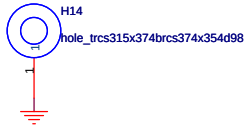

Type 7

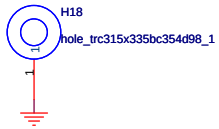

Type 8

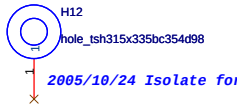

2005/10/24 Isolate for EMI request

Type 9

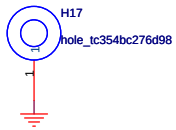

Type CPU

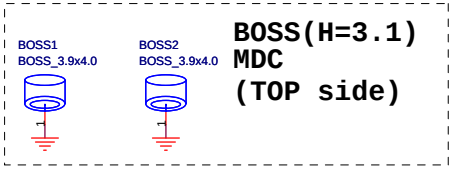

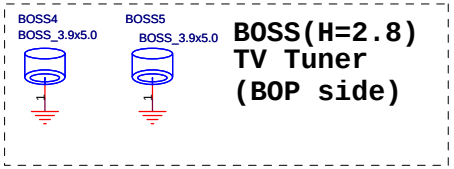

Type NPTH Guide (spherical)HOLD

close H1

Type NPTH Guide (oval-shaped)HOLD

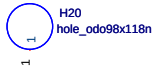

close H6

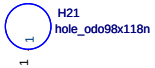

close H17

FOXCONN	HON HAI Precision Ind. Co., Ltd. CCPBG - R&D Division	
Title	HOLE & BOSS	
Size A3	Document Number (MS21-1-01)MainBoard (MBX-164) TYPE2	Rev 1.1
Date: Thursday, August 10, 2006	Sheet 75 of 78	

MS20 MP to MS21 DVT Change History

(2006/5/23)

(川) 01.(Page08) Remove R110 for PM_EXTTS#1 back up pull up res.ICH7 (DPRSLPVR)already have internal pull up
(川) 02.(Page14) Remove backup DIMM thermal senser Change R168 from stuff to NC(basis on MS20 MP ECR)
(川) 03.(Page15) Remove backup DIMM thermal senser Change R1627 from stuff to NC(basis on MS20 MP ECR)
(閻) 04.(Page34) US Silicon Image ATC test HDMI DDC capacitance fail(>50pF)change U128 no stuff Basis on MS20 MP ECR
add back up res.(R1962)no stuff for U128 VCC

(才) 05.(Page39) Delete U30,R1183,R649 (backup circuit)
(寶) 06.(Page42) For power droup cause 0.16V voltage loss Issue(1)F7,F8,F19,F20 no stuff(2)Co-layout GP17~GP20 with fuse
(葉) 07.(Page55) Separet analog ground for digital Noise issue
(1)Add bead (L152)before LDO chipand
(2)Change C873 from GND to A_GND
(3)Add C1675 on +5VRUN before L152

(葉) 08.(Page56) Shoei CAP will EOL. CAP24,CAP25(SP CAP) change to Stuff; CAP22,CAP23(Shoei CAP) change to No Stuff
(葉) 09.(Page56) PBSS2515F.115 will EOL ,Q77,Q78,Q143,Q144 change to PBSS2515E.115
(葉) 10.(Page56) Improve the voice of speaker up to 0.94W
(1)Add damping Resistors R1953 on SRIN,R1954 on AMP_SLIN then speaker amp output won't be distorted.
(2)Change R1932 from 6.8K to 5.6K, then amp gain change from 8dB to 10dB.

(葉) 11.(Page57) PBSS2515F.115 will EOL Q89,Q90,Q91,Q92 change to PBSS2515E.115
(葉) 12.(Page59) Improve SNR issue,Add 1uF capacitors close CN64 :C1671,C1672 on USB_VCC2,C1669 on +3VRUN_AUDIO_BD,
and C1670 on VDDA .
(葉) 13.(Page59) Separet analog ground for digital Noise issue:
(1)Remove GP3 (Close Jumper)not bridge between GND and A_GND
(2)Backup two jumper resistors for bridge between GND and A_GND
(C1388,C1966 on Screw hole H3,C1957,C1959 on screw hole H5)
(3)Isolate screw hole H4,add 100pF capacitors C1673,C1674 for EMI,Zener diode D100 for ESD
(4)Add jumper resistor for Return patch R1955 close L70(+5VAMP) & R1958 close U41(+5VRUN),& R1960 close codec

(才) 14.(Page39) Remove back up circuit LVDS GPIO on U29 pinU2(1)Add Test Pad TP890 on GPIO34(2)Del Q126
(寶) 15.(Page54) Remove back up F6 power source from +3VALW (Del)R1944,R1946
(青) 16.(Page67) Reserve PC64(10U_25V_M_B 1206) for 1210 size shortage. Change PR57 from 0805 size to 0603 size for 0603 size rated current is also enough.
(青) 17.(Page70) Add PC375 (0.1uF) to avoid IMVP_OK signal 700mV pulse when power on. Change PC107/PC108 from 2.2U_16V_M to 2.2U_10V_M for 2.2U_16V_M shortage.
(青) 18.(Page71) Change PC164/PC165 from 2.2U_16V_M to 2.2U_10V_M for 2.2U_16V_M shortage.

(青) 19.(Page71) Change PC368 from 2.2U_16V_M to 2.2U_10V_M for 2.2U_16V_M shortage. Change PU12 from LMC7225IM5X to NCS2202SN1T1G for LMC7225IM5X shortage.

(才) 20.(Page60) Modify system ID setting. R725 from stuff change to NC,R726 from NC change to stuff
(閻) 21.(Page32) CN66,CN67 Change from MOLEX(1N-0010000-MWG0) to FOXCONN(1N-0010000-F0T0)

(寶) 22.(Page63) CN68 Change from MOLEX(1N-0010000-MWG0) to FOXCONN(1N-0010000-F0T0)
(葉) 23.(Page57) Add C1676 (4.7 uF/bupass cap) close A_ U99 pin8
(葉) 24.(Page58) Add C1677,C1678 (4.7 uF/bupass cap) close A_ U101,U102 pin8
(青) 25.(Page74) Add Inverter Boost Circuit

(2006/5/24)

(葉) 1.(Page55) According to MOR suggest Change Int MIC topology from single end to differential
(1) C1251 change from 33pF 0402 to 1uF 0603
(2) C1252 change from 12pF 0402 to 1uF 0603
(3) C1270 change from 0.1F 0402 to 1uF 0603
(4) Add R1967, R1968 100 ohm 0402
2.(Page57) According to MOR suggest Change Int MIC topology from single end to differential
(1) C1231 change from 4.7uF 0805 to 220pF 0402
(2) C1232 change from 1uF 0805 to 4.7uF 0805
(3) C1233 change from 4.7uF 0805 to NC_33pF 0402
(4) C1234 change from 100pF 0402 to NC_33pF 0402
(5) C1237 change from 100pF 0402 to 33pF 0402
(6) R1318 change from 10Kohm 0402 to 5.1Kohm 0402
(7) R1319 change from 1Kohm 0402 to 4.7Kohm 0402
(8) R1320 change from 33ohm 0402 to 100ohm 0402
(9) R1321 change from NC_0ohm 0402 to 4.7Kohm 0402
(10) R1325 change from 47Kohm 0402 to 4.7Kohm 0402
(11) R1326 change from 7.5Kohm 0402 to 2.2Kohm 0402
(12) R1327 change from 100ohm 0402 to 1Kohm 0402
(13) Add R1970, R1971 100 ohm 0402
(14) Add R1969 4.7 Kohm 0402
(15) R1236 change from 4.7u to 1u

(2006/5/26)

(葉) (1) C1230 change from 2200pF to 4700 pF by MOR request

MS21 DVT to MS21 PVT Change History

(2006/6/26)

(才) 01.(Page60) Solve Doi san concern EC's GPIO23 is CMOS out and if BTR drive it to GND it may damage the EC.
(1)Change R1762 from 0 to 1K ohm,
(2)Change net name R1762-2 from N18386242 to EC_GPIO23
(3)Change net name R690-1 from ALW_ON to EC_GPIO23

(閻) 02.(Page31) Del inverter boost circuit , after change ,the inverter circuit is the same with MS20 MP
(1)Delete PR426&PR427
(2)change C604-1,C1557-1,C1558-1,CN49 pin1,pin2 net name INVERTER_VCC to net DCBATOUT.

(寶) 03.(Page74) Del inverter boost circuit , after change ,the inverter circuit is the same with MS20 MP
Delete 10U_25V_M*9pcs(PC380,PC381,PC382,PC383,PC384,PC385,PC386,PC389,PC390),
0.01U_25V_K*1pcs (PC387),1U_25V_M*1pcs(PC388),0.22U_16V_M*1pcs(PC391),
220P_50V_K*1pcs(PC392),SKS30-04AT-G*1pcs(PD53),8UH-100KHZ_2.5A_0.07R*1pcs(PL22),
2N7002*2pcs(PQ114,PQ116),FDS6680A*1pcs(PQ117),120K_F*1pcs(PR432),
0.03_F*1pcs(PR434)95.3K_F*1pcs(PR435),10K_F*1pcs(PR436),MAX668EUB+T*1pcs(PU22),
100K_J*1pcs (PR428) 100K_J*1pcs (PR429)

(青) 04.(Page67)Change PR53&PR55 from 100_J to 0_J by Mor side suggestiong
Original PR53&PR55(100ohm) is used as current limit.But now we have added series 1K ohm,
(Page 60, change R1762 from 0 ohm to 1K ohm) So we need not 100ohm resistor for curret limit

(葉) 05.(Page56) Modify internal speaker AMP gain setting,change R1953/R1954 from 4.7K (AMP output 1.12W) to
5.1Kohm(AMP output0.98W) to fit in speaker (1.0W)spec.

(葉) 06.(Page57) Modify internal MIC AMP gain setting,change R1318 from 5.1K to 5.9K ohm, To lead TYPE2 board gain
(differential type MIC)the same with TYPE1 board single end MIC) (Gain=9.2)

(才) 07.(Page60) Modify Constant-Current SONY LOGO LED circuit for EC control soft start/down (function up)issue
(1).Del back up Test Pad TP864
(2).Add R1978 (0 ohm) link EC pin176 and INV_ENABLE

(寶) 08.(Page74) Modify Constant-Current SONY LOGO LED circuit
A.for U138 cost issue
1.Back up:U138(MAX1916EZT),R1936 (91K ohm,0402),R1982(0R,NC),R1983(0R,NC)
2.Remove back up solution U139(GMT,G5920TB1Uf),C1660(0.1u)
3.Add new Constant-Current circuit (OP + MOS)
51K ohm: R1972 ,
1.2K ohm: R1973 ,
1k ohm:R1974 ,
10 ohm: R1975
(NC)0 ohm: R1976(for back up U138 MAX1916)
0.1uF,16V: C1679
(NC)22uF,6.3V: C1680
OP LM358 ADR : U139
N-MOS 2N7002: Q158
N-MOS DTA114YUA:Q159
P-MOS DTC144EUA:Q160

B.for EC control soft start/down (function up)issue
1.Del R1948(back up LOGO_LED_EN_EC to U126 pin1)
2.Serial (Back up) R1981 between INV_ENABLE to U126 pin2
3.Move net LOGO_LED_EN_EC from R1948 pin1 to R1980 pin1
4.Add R1977 between +5VRUN to U126 pin5(VCC)
5.Add R1980 between Logo_led_en_ec to U126 pin2

(寶) 09.(Page 42) Delete SATA HDD Fuse backup circuit
(1)Remove F7,F8,F19,F20 Pad
(2)Remove GP17~GP18 open gap

(才) 10. (Page 62) MOR fan circuit modify to backup
(NC)U118 (NC)R1893
(NC)R1624 (NC)C1473
(NC)R1894 (NC)R1895

MS21 PVT to MS21 MP Change History

(寶) 01.(Page74) MS21 not support soft ligh / soft dark. So cancle INV_ENABLE control LOGO LED.
R1980 change from stuff to NC
R1981 change from NC to stuff

(才) 02.(Page60) MS21 not support soft ligh / soft dark. So cancle INV_ENABLE control LOGO LED.
R1978 Change from stuff to NC

(葉) 03.(Page57) Change C1676 from stuff to NC for MOR suggestion Cost down request.

(青) 04.(Page66) At MS21 PCN1 used FOXCONN connector, Change PCN1 Vendor from molex to NWING

(良) 05.(Page29) Change D60,D61,D81 Value from NV to Normal

(良) 06.(Page20) Change Y2 Value from Normal to NV

FOXCONN	HON HAI PRECISION IND. CO., LTD. CPBG - R&D Division	
Title	History(EVT)	
Size A2	Document Number (MS21-1-01)MainBoard (MBX-164) TYPE2	Rev 1.1
Date: Friday, August 11, 2006	Sheet 76 of 78	

MS21 Power On Sequerce Block Diagram

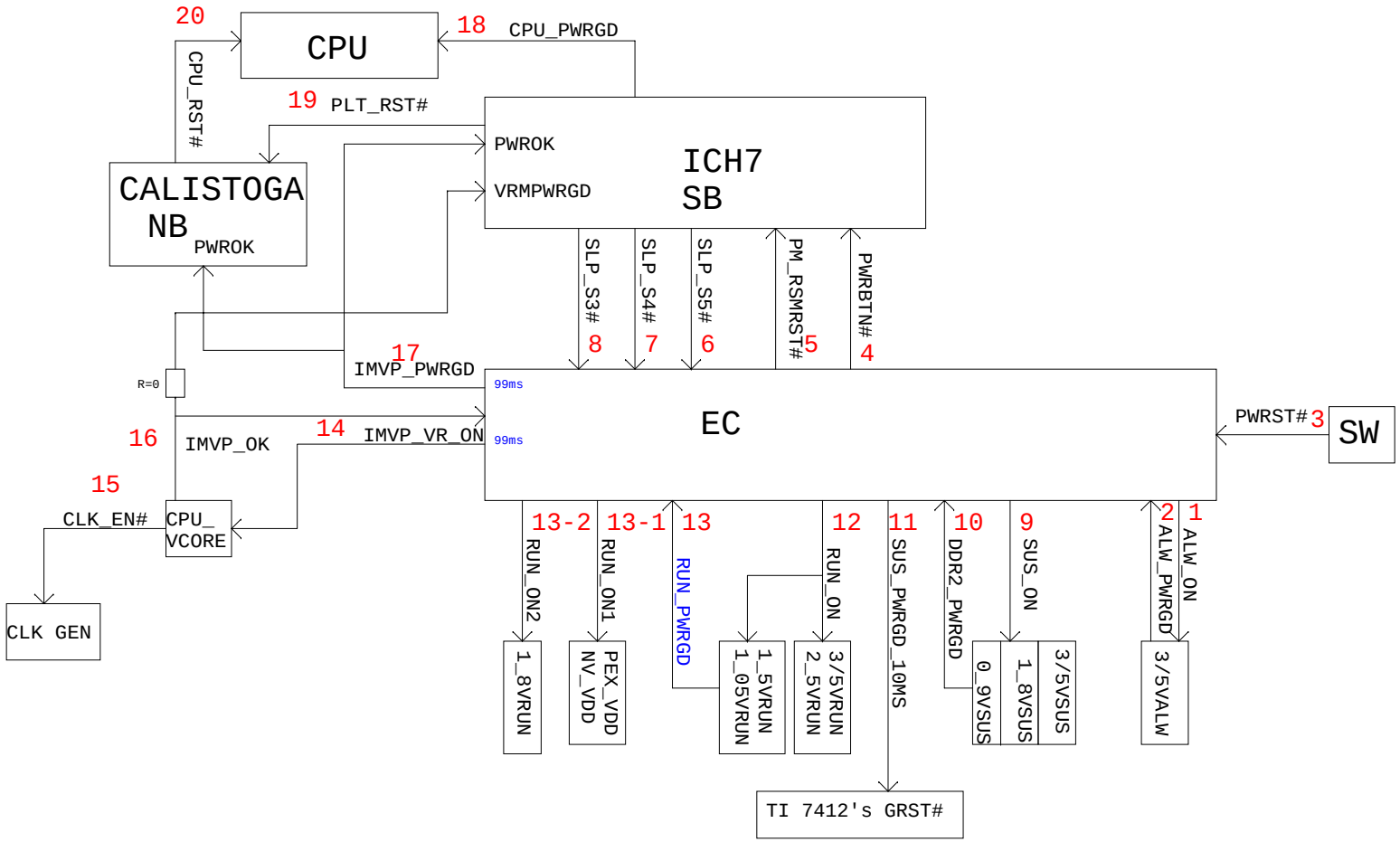

FOXCONN	HON HAI Precision Ind. Co., Ltd. CCPBG - R&D Division	
Title	MS21 Power On Sequerce Block Diagram	
Size C	Document Number (MS21-1-01)MainBoard (MBX-164) TYPE2	Rev 1.1
Date: Thursday, August 10, 2006	Sheet 77 of 78	

Power On/Off Sequerce Specification

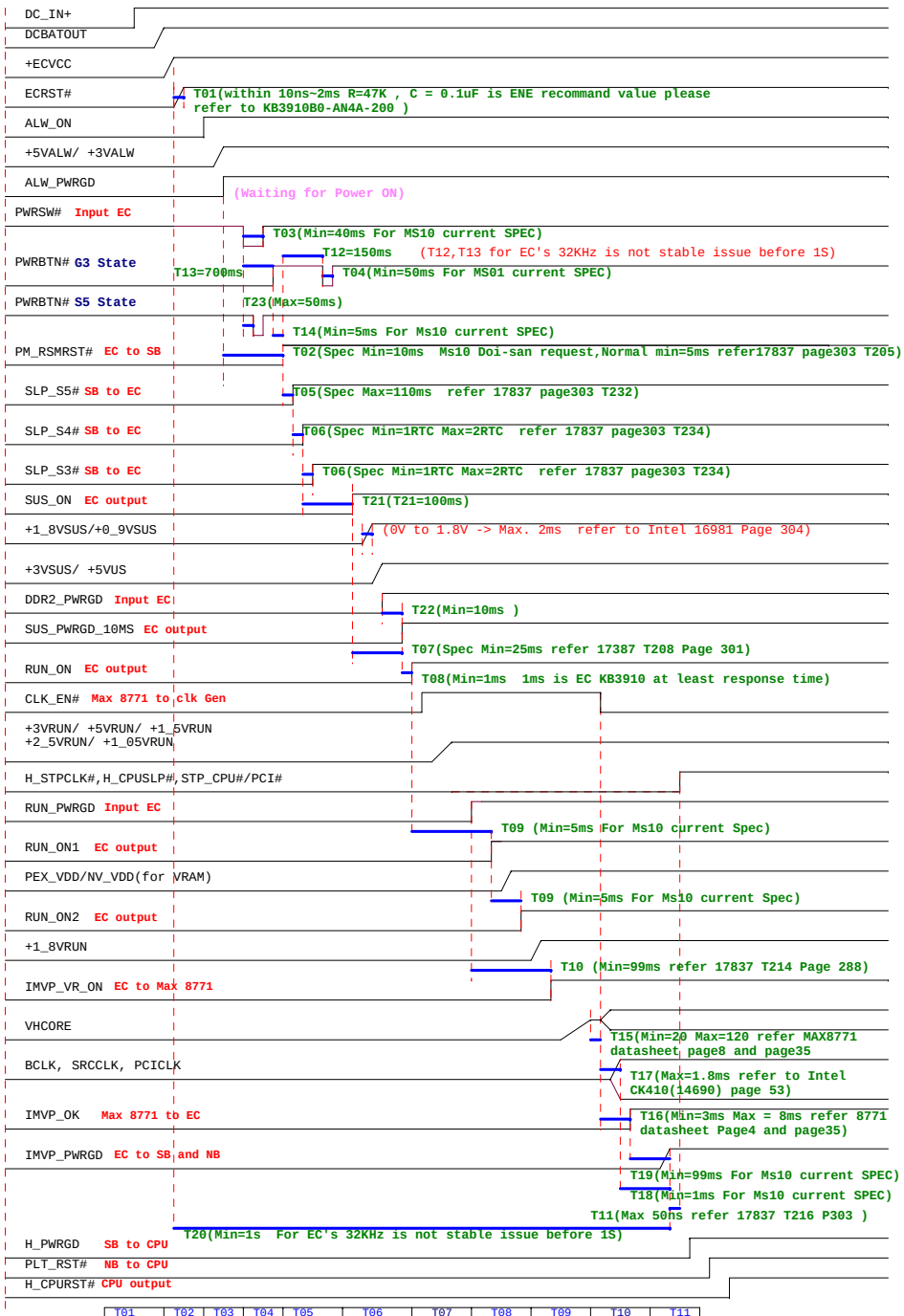

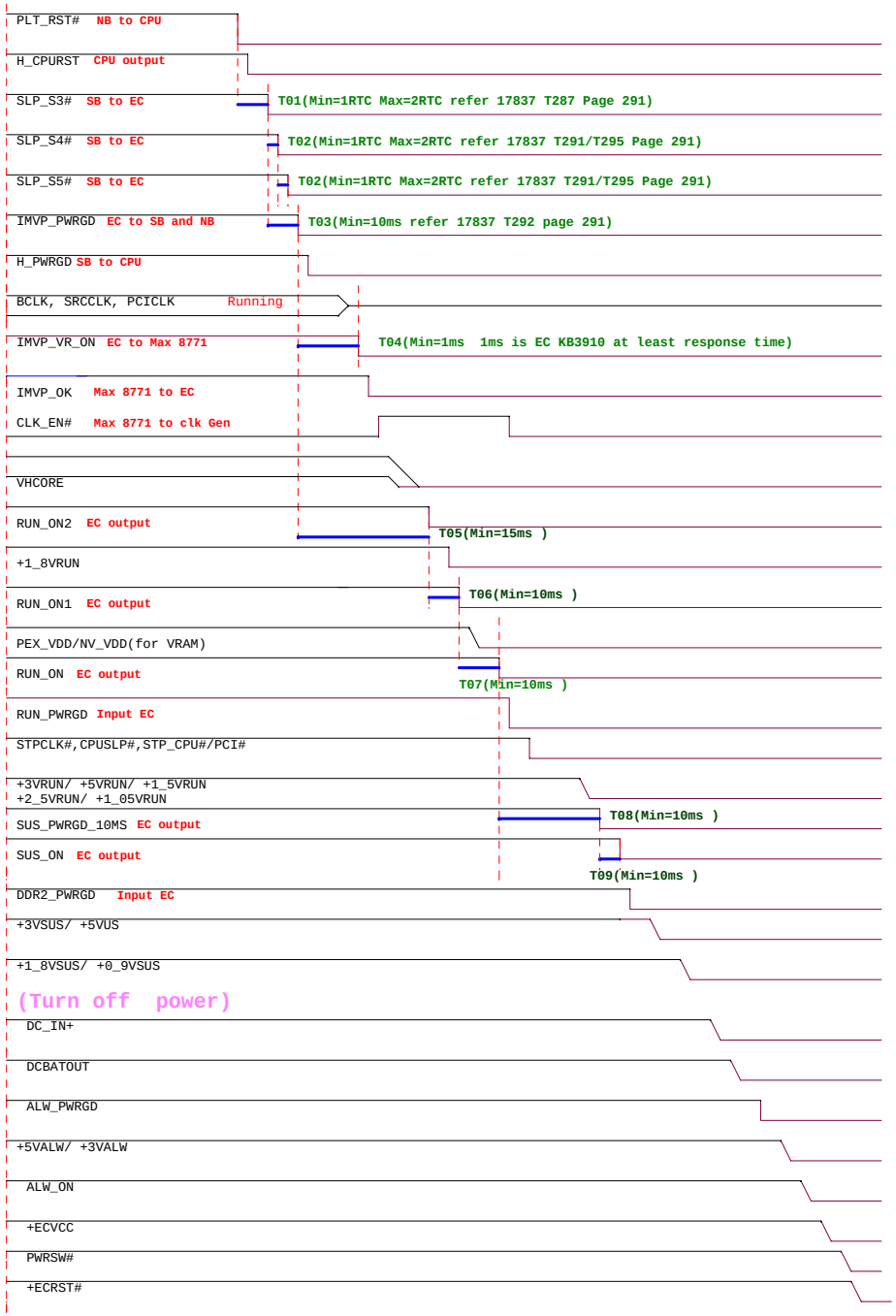

T01	T02	T03	T04	T05	T06	T07	T08	T09	T10	T11
within 10ns~2ms	Min. 10 ms	Min. 40ms	Min. 50ms	Max. 110ms	1 - 2 RTCCLK	Min. 25 ms	Min. 1ms	Min. 10ms	Min. 99ms	Max. 50ms

T12	T13	T14	T15	T16	T17	T18	T19	T20	T21	T22	T23
Min. 150ms	Min 700ms	Min 5ms	Min : 20us Max : 120us	Min : 3ms Max : 8ms	Max 1.8ms	Min 1ms	Min. 99ms	Min. 1s	100ms	Min. 10ms	Max 50ms

T01	T02	T03	T04	T05	T06	T07	T08	T09
1 - 2 RTCCLK	1 - 2 RTCCLK	Min. 10ms	Min. 1ms	Min. 15ms	Min. 10ms	Min. 10ms	Min. 10ms	Min. 10ms

FOXCONN HON HAI Precision Ind. Co., Ltd. CCPBG - R&D Division

Title: MS21 Power On Sequerce Timing specification

Size: C | Document Number: (MS21-1-01)MainBoard (MBX-164) TYPE2 | Rev: 1.1

Date: Thursday, August 10, 2006 | Sheet 78 of 78