1. ALL RESISTANCE VALUES ARE IN OHMS, 0.1 WATT +/- 5%.
2. ALL CAPACITANCE VALUES ARE IN MICROFARADS.
3. ALL CRYSTALS & OSCILLATOR VALUES ARE IN HERTZ.

M38A - DVT

06/22/06

REV	ZONE	ECN	DESCRIPTION OF CHANGE	CK APPD / DATE	ENG APPD / DATE
13		445818	ENGINEERING RELEASED	06/22/06	06/22/04

PAGE	DRI	PDF	CIRCUIT
1	JD	JD 1	TABLE OF CONTENTS
2	JD	JD 2	SYSTEM BLOCK DIAGRAM
3	RT	RT 3	POWER BLOCK DIAGRAM
4	JD	JD 4	TABLE ITEMS & REVISION HISTORY
5	JD	JD 5	FUNC TEST
6	RT	RT 6	POWER CONNECTOR / POWER ALIAS
(M42) 7	MS	JD 7	CPU - BUS INTERFACE
(M42) 8	MS	JD 8	CPU - PWR & GND
9	MS	JD 9	CPU - DECAPS
(M42) 10	MS	JD 10	CPU - THERMAL SENSOR
M42 11	MS	JD 11	CPU - ITP CONN
M1 12	PS	JH 12	NB - CPU INTERFACE
M1 13	PS	JH 13	NB - VIDEO INTERFACE
14	PS	JH 14	NB - MISC INTERFACES
M1 15	PS	JH 15	NB - DDR2 INTERFACE
M1 16	PS	JH 16	NB - POWER 1
M1 17	PS	JH 17	NB - POWER 2
M1 18	PS	JH 18	NB - GROUNDS
19	PS	JH 19	NB - DECAPS
M1 20	PS	JH 20	NB - CONFIG STRAPS
21	JD	JD 21	SB - RTC,LAN,AUDIO,ATA,CPU,LPC
22	JD	JD 22	SB - PCIE,SPI,USB,DMI,PCI
23	JD	JD 23	SB - SMB,GPIO,PM,CLKS
24	JD	JD 24	SB - POWERS AND GROUNDS
25	JD	JD 25	SB - DECAPS
26	JD	JD 26	SB - MISC
27	JD	JD 27	SB - SMB BUS CONNECTIONS
28	PS	JD 28	DDR2 - SO-DIMM CONN A
29	PS	JD 29	DDR2 - SO-DIMM CONN B (REVERSED)
30	PS	JD 30	DDR2 - TERMINATION
M1 31	RT	RT 31	DDR2 - VTT SUPPLY
M42 33	JD	JD 32	CLOCKS - GENERATOR
34	JD	JD 33	CLOCKS - TERMINATIONS
38	JD	JD 34	ATA (SATA AND IDE) CONN'S
(M42) 41	JD	JD 35	LAN - YUKON'S PCIE INTERFACE
42	JD	JD 36	LAN - YUKON'S PWR, MISC
43	JD	JD 37	LAN - CONN
44	JD	JD 38	FIREWIRE - FW323-06
45	JD	JD 39	FIREWIRE - DECAPS
46	JD	JD 40	FIREWIRE - CONN'S
47	JD	JD 41	USB - CONN'S

PAGE	DRI	PDF	CIRCUIT
53	JD	JD 43	PCI-E - AIRPORT MINI-PCIE CONN
54	JD	JD 44	PCI-E - UNUSED PORTS
58	MS	MS 45	SMC - H8S2116
59	MS	MS 46	SMC - SMB BUSSES, MISC
60	MS	MS 47	SMC - LPC+ CONN
61	JH	JH 48	SMC - GPU/NB THERMAL SENSOR
RX 63	MS	JD 49	SMC - SPI BOOTROM
65	MS	MS 50	SMC - FANS
66	MS	MS 51	SMC - FANS
67	JD	JD 52	SMC - TPM
SO 68	PT	JD 53	AUDIO - CODEC,VREG,MIC BIAS
SO 72	PT	JD 54	AUDIO - INTERNAL SPEAKER AMP
SO 73	PT	JD 55	AUDIO - I/O CONN'S,EMC
SO 74	PT	JD 56	AUDIO - DETECT TRANSLATORS
RP 75	RT	RT 57	VR - CPU CORE
RP 76	RT	RT 58	VR - CPU I-V SENSE CKT
RP 77	RT	RT 59	VR - "S0" 1.2V & 2.5V (GRAFIX)
RP 78	RT	RT 60	VR - "S0" 1.8V
RP 79	RT	RT 61	VR - "S3" 1.8V
RP 80	RT	RT 62	VR - "S0" 1.5V
RP 81	RT	RT 63	VR - "S0" 1.05V
RP 83	RT	RT 64	VR - "S3" 3.3V AND 5V
JH 84	JH	JH 65	GPU - M56 PCI-E
M1 85	JH	JH 66	GPU - VCORE SUPPLY
M1 86	JH	JH 67	GPU - M56 CORE PWR
M1 87	JH	JH 68	GPU - M56 FRAME BUFFER
M1 88	JH	JH 69	GPU - MISC
M1 89	JH	JH 70	GPU - GDDR SDRAM A
M1 90	JH	JH 71	GPU - GDDR SDRAM B
M1 91	JH	JH 72	GPU - M56 GPIO,DVO,MISC
M1 92	JH	JH 73	GPU - M56 CLOCKS
M1 93	JH	JH 74	GPU - M56 VIDEO INTERFACES
JH 94	JH	JH 75	GPU - INTERNAL DISPLAY CONN'S
JH 95	JH	JH 76	GPU - TP'S
JH 96	JH	JH 77	GPU - TMDS,INVERTER,EXT VGA
JH 97	JH	JH 78	GPU - EXTERNAL DISPLAY CONN'S

DIMENSIONS ARE IN MILLIMETERS
XX ±
X.XX ±
X.XXX ±
ANGLES ±
DO NOT SCALE DRAWING

THIRD ANGLE PROJECTION

METRIC

DRAFTER		DESIGN CK	
ENG APPD		MFG APPD	
QA APPD		DESIGNER	
RELEASE		SCALE NONE	

MATERIAL/FINISH NOTED AS APPLICABLE

SIZE D

Apple Computer Inc.

NOTICE OF PROPRIETARY PROPERTY

THE INFORMATION CONTAINED HEREIN IS THE PROPRIETARY PROPERTY OF APPLE COMPUTER, INC. THE POSSESSOR AGREES TO THE FOLLOWING

I TO MAINTAIN THE DOCUMENT IN CONFIDENCE
II NOT TO REPRODUCE OR COPY IT
III NOT TO REVEAL OR PUBLISH IN WHOLE OR PART

TITLE
SCH,MLB,M38A

DRAWING NUMBER 051-7148 REV. 13

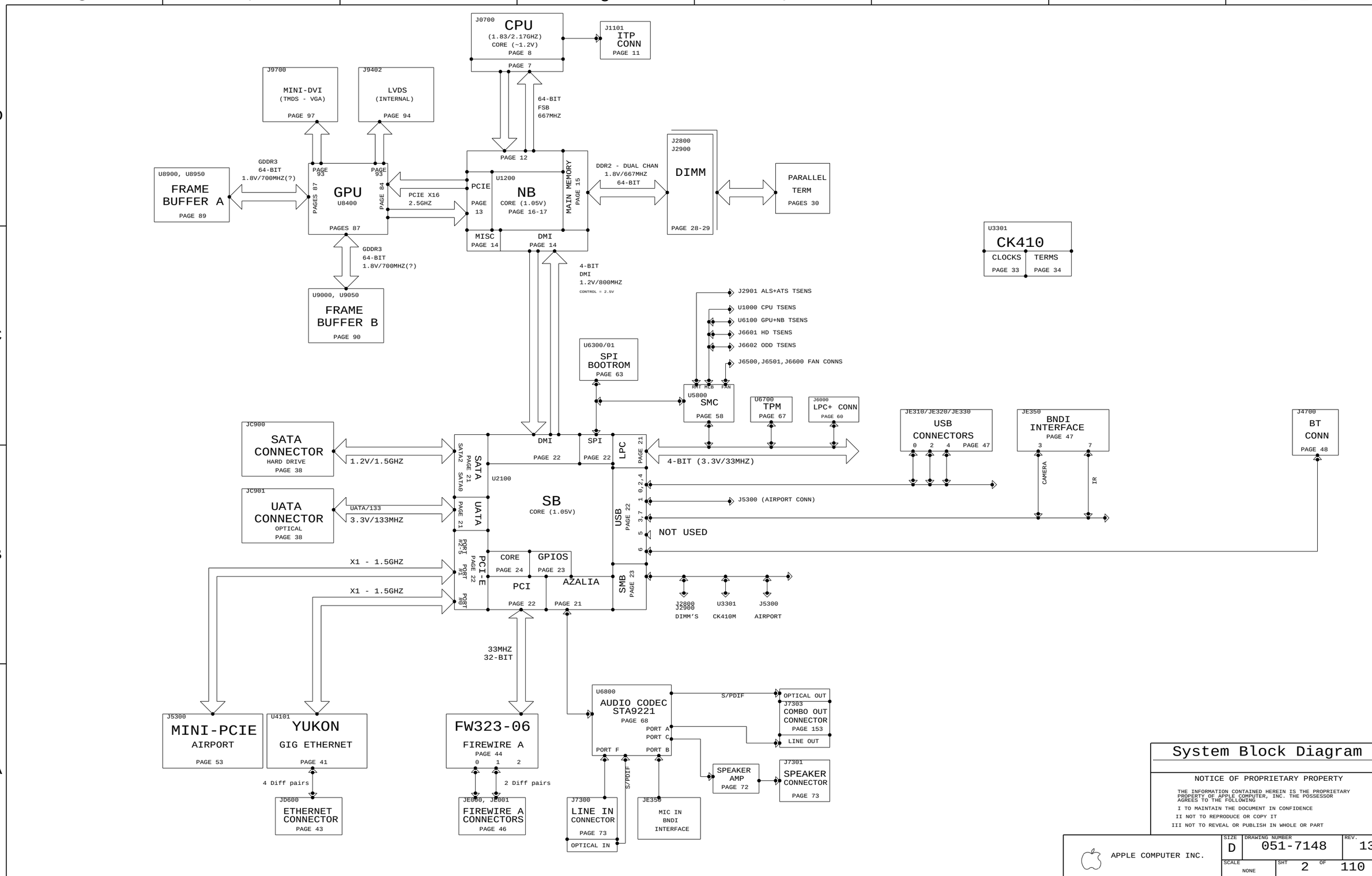

System Block Diagram

NOTICE OF PROPRIETARY PROPERTY

THE INFORMATION CONTAINED HEREIN IS THE PROPRIETARY PROPERTY OF APPLE COMPUTER, INC. THE POSSESSOR AGREES TO THE FOLLOWING

I TO MAINTAIN THE DOCUMENT IN CONFIDENCE

II NOT TO REPRODUCE OR COPY IT

III NOT TO REVEAL OR PUBLISH IN WHOLE OR PART

APPLE COMPUTER INC.

SIZE	DRAWING NUMBER	REV.
D	051-7148	13
SCALE NONE	SHT 2 OF 110	

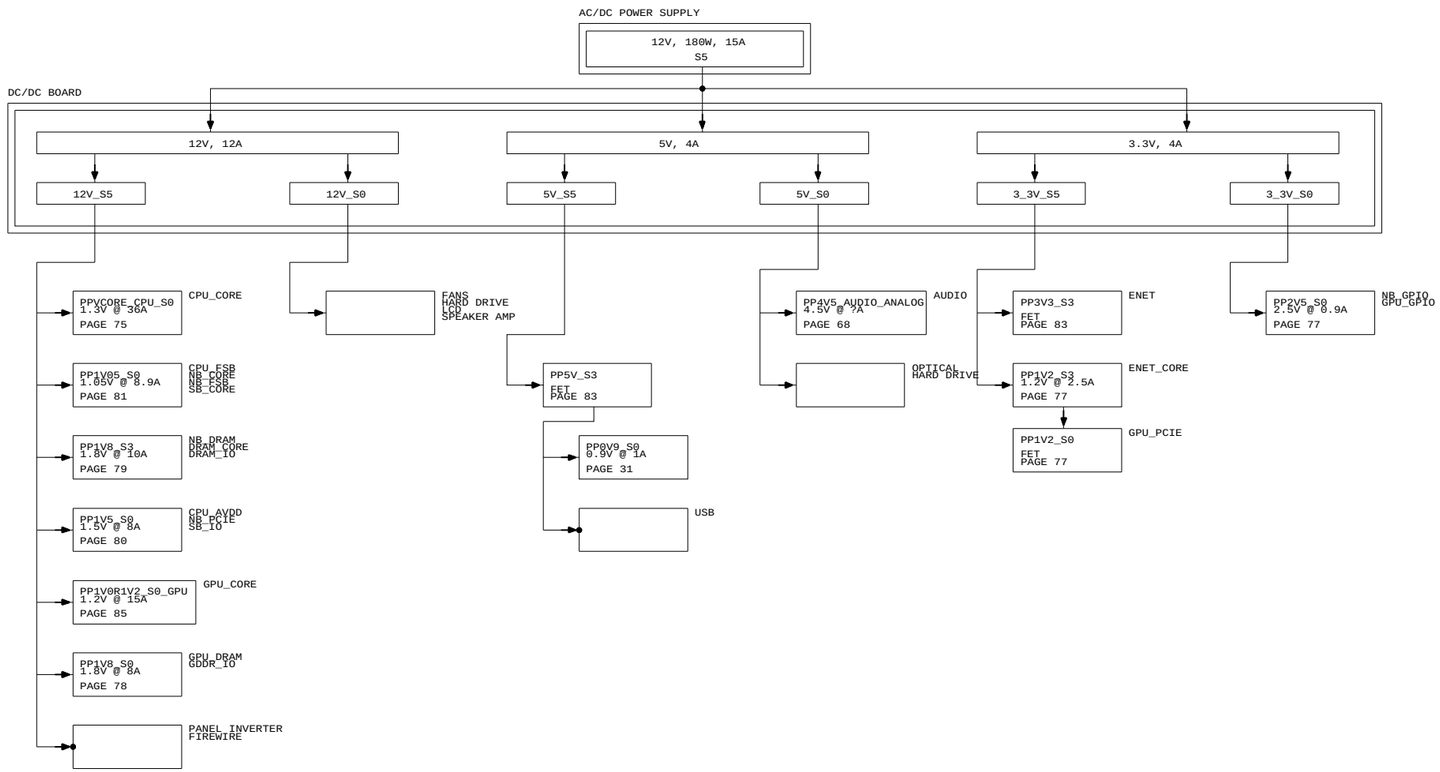

Power Block Diagram

NOTICE OF PROPRIETARY PROPERTY

THE INFORMATION CONTAINED HEREIN IS THE PROPRIETARY PROPERTY OF APPLE COMPUTER, INC. THE POSSESSOR AGREES TO THE FOLLOWING

I TO MAINTAIN THE DOCUMENT IN CONFIDENCE

II NOT TO REPRODUCE OR COPY IT

III NOT TO REVEAL OR PUBLISH IN WHOLE OR PART

APPLE COMPUTER INC.

SIZE	DRAWING NUMBER	REV.
D	051-7148	13
SCALE NONE	SHT 3 OF 110	

COMMON

	PART#	QTY	DESCRIPTION	REFERENCE DESIGNATOR(S)	CRITICAL	BOM OPTION
	511S0025	1	IC,CPU-SKT,479BGA	J0700	CRITICAL	
	338S0328	1	IC,945PM,NORTHBRIDGE	U1200	CRITICAL	
	343S0385	1	IC,SB,652BGA	U2100	CRITICAL	
	338S0344	1	IC,ATI,M56P,GRAFIXCTLR,880BGA,LF	U8400	CRITICAL	
	359S0101	1	IC,CY28445-5,CLK GEN,68PIN QFN	U3301	CRITICAL	
	338S0270	1	IC,88E8053,GIGABIT ENET XCVR,64P QFN,NO	U4101	CRITICAL	
(335S0382)	341S1797	1	IC,ENET LAN ROM	U4102	CRITICAL	
	338S0279	1	IC,FW32306,1394A LINK,TQFP	U4400	CRITICAL	
	341S1789	1	IC,TPM,TSSOP,28P	U6700	CRITICAL	LEMENU
UNSCREENED P/N 353S1235	353S1465	1	IC,CPU VREG,IMVP,TWO PHASE	U7500	CRITICAL	
	128S0078	3	CAP,EL,AL,330UF,20%,16V,10X12.7MM,SMD,LF	C7517,C7518,C7910	CRITICAL	
	825-6447	1	MLB LABEL,48.0X4.8	X14	CRITICAL	

PART NUMBER	ALTERNATE FOR PART NUMBER	BOM OPTION	REF DES	COMMENTS:
126S0096	126S0076		C7801	SANYO W16CE680KX 680UF 16V LF
126S0086	126S0078		C699,C940,C1900,C1901,C1968	SANYO W6CE330FS 330UF 6.3V LF
128S0080	128S0078		C7517,C7518,C7910	SANYO 16SVP330M 330UF 16V SMD LF
124-0338	124-0333		C7501,C8014	CAP,AL,EL,680UF,16V,RAD,10X12.5MM
138S0580	138S0552			22UF 0805
353S1321	353S1105		U7910	LM339
378S0141	378S0140		LED601,LED602,LED603	LED
353S1461	353S1465		U7500	CPU REGULATOR - ISL9504

	PART#	QTY	DESCRIPTION	REFERENCE DESIGNATOR(S)	CRITICAL	BOM OPTION
	051-7148	1	PCB,SCHEM,MLB,M38A	SCH1		17_INCH_LCD
	820-2052	1	PCB,FAB,MLB,M38A	MLB1		17_INCH_LCD
(341S1908 - DEVEL) (341S1909 - FINAL) (335S0384 - BLNK)	341T0040	1	EFI ROM,M38A	U6301	CRITICAL	17_INCH_LCD
	114S0264	1	3.01K,1%,1/16W,402,MF-LF	R8522		GPU_VCORE_1P2V
(341S1907 - PROG) (338S0274 - BLNK)	341T0039	1	IC,SMC,M38A	U5800	CRITICAL	17_INCH_LCD
	338S0315	1	IC,ATI,M56LP,GRAFIX CTLR,880BGA,LF	U8400	CRITICAL	GPU_B26_LP
	114S0287	1	5.11K,1%,1/16W,402,MF-LF	R8522		GPU_VCORE_0P953V
	114S0281	1	4.53K,1%,1/16W,402,MF-LF	R8522		GPU_VCORE_1P0V
	337S3299	1	2.00GHZ MEROM	CPU	CRITICAL	2P00_CPU
	337S3293	1	2.16GHZ MEROM	CPU	CRITICAL	2P16_CPU

PART#	QTY	DESCRIPTION	REFERENCE DESIGNATOR(S)	CRITICAL	BOM OPTION
333S0354	4	IC,SGRAM,GDDR3,8MX32,700MHZ,136FBGA	U8900,U8950,U9000,U9050	CRITICAL	ATI_FB_128M_SAMSUNG
333S0358	4	IC,SGRAM,GDDR3,8MX32,700MHZ,136FBGA	U8900,U8950,U9000,U9050	CRITICAL	ATI_FB_128M_HYNIX
333S0376	4	IC,SGRAM,GDDR3,8MX32,700MHZ,136FBGA	U8900,U8950,U9000,U9050	CRITICAL	ATI_FB_128M_INFINEON

PART#	QTY	DESCRIPTION	REFERENCE DESIGNATOR(S)	CRITICAL	BOM OPTION
333S0350	4	IC,SGRAM,GDDR3,16MX32,700MHZ,136FBGA	U8900,U8950,U9000,U9050	CRITICAL	ATI_FB_256M_SAMSUNG
333S0351	4	IC,SGRAM,GDDR3,16MX32,700MHZ,136FBGA	U8900,U8950,U9000,U9050	CRITICAL	ATI_FB_256M_HYNIX
333S0377	4	IC,SGRAM,GDDR3,16MX32,700MHZ,136FBGA	U8900,U8950,U9000,U9050	CRITICAL	ATI_FB_256M_INFINEON

Table Items

NOTICE OF PROPRIETARY PROPERTY

THE INFORMATION CONTAINED HEREIN IS THE PROPRIETARY PROPERTY OF APPLE COMPUTER, INC. THE POSSESSOR AGREES TO THE FOLLOWING

I TO MAINTAIN THE DOCUMENT IN CONFIDENCE

II NOT TO REPRODUCE OR COPY IT

III NOT TO REVEAL OR PUBLISH IN WHOLE OR PART

APPLE COMPUTER INC.

SIZE	DRAWING NUMBER	REV.
D	051-7148	13

SCALE NONE

SHT 4 OF 110

LAYOUT NOTE: PLACE NEAR J0700

12 7 5	FSB_A_L<6>	PP600	OMIT P4MM
12 7 5	FSB_ADSTB_L<0>	PP601	OMIT P4MM
12 7 5	FSB_A_L<27>	PP602	OMIT P4MM
12 7 5	FSB_ADSTB_L<1>	PP603	OMIT P4MM
12 7 5	FSB_D_L<0>	PP604	OMIT P4MM
12 7 5	FSB_DSTBN_L<0>	PP605	OMIT P4MM
12 7 5	FSB_DSTBP_L<0>	PP606	OMIT P4MM
12 7 5	FSB_DINV_L<0>	PP607	OMIT P4MM
12 7 5	FSB_D_L<16>	PP608	OMIT P4MM
12 7 5	FSB_DSTBN_L<1>	PP609	OMIT P4MM
12 7 5	FSB_DSTBP_L<1>	PP610	OMIT P4MM
12 7 5	FSB_DINV_L<1>	PP611	OMIT P4MM
12 7 5	FSB_D_L<41>	PP612	OMIT P4MM
12 7 5	FSB_DSTBN_L<2>	PP613	OMIT P4MM
12 7 5	FSB_DSTBP_L<2>	PP614	OMIT P4MM
12 7 5	FSB_DINV_L<2>	PP615	OMIT P4MM
12 7 5	FSB_D_L<59>	PP616	OMIT P4MM
12 7 5	FSB_DSTBN_L<3>	PP617	OMIT P4MM
12 7 5	FSB_DSTBP_L<3>	PP618	OMIT P4MM
12 7 5	FSB_DINV_L<3>	PP619	OMIT P4MM
12 7 5	FSB_LOCK_L	PP620	OMIT P4MM
12 11 7	FSB_CPURST_L	PP621	OMIT P4MM
21 7	CPU_INIT_L	PP622	OMIT P4MM
21 7	CPU_A20M_L	PP623	OMIT P4MM
21 7	CPU_IGNNE_L	PP624	OMIT P4MM
21 7	CPU_STPCLK_L	PP625	OMIT P4MM
21 7	CPU_INTR	PP626	OMIT P4MM
21 7	CPU_NMI	PP627	OMIT P4MM
21 7	CPU_SMI_L	PP628	OMIT P4MM
34 7	FSB_CLK_CPU_P	PP629	OMIT P4MM
34 7	FSB_CLK_CPU_N	PP630	OMIT P4MM

LAYOUT NOTE: PLACE NEAR U2100

34 21	SB_CLK100M_SATA_P	PP6C4	OMIT P4MM
34 21	SB_CLK100M_SATA_N	PP6C5	OMIT P4MM
38 21	IDE_PDIOR_L	PP6C6	OMIT P4MM
38 21	IDE_PDIORDY	PP6C7	OMIT P4MM
38 21	IDE_PDD<9>	PP6C8	OMIT P4MM
34 22	PCI_CLK_SB	PP6D0	OMIT P4MM
41 22	PCIE_A_D2R_P	PP6D1	OMIT P4MM
41 22	PCIE_A_D2R_N	PP6D2	OMIT P4MM
53 22	PCIE_B_D2R_P	PP5E1	OMIT P4MM
53 22	PCIE_B_D2R_N	PP5E2	OMIT P4MM
22 14	DMI_N2S_P<0>	PP6D3	OMIT P4MM
22 14	DMI_N2S_N<0>	PP6D4	OMIT P4MM
34 22	SB_CLK100M_DMI_P	PP6D5	OMIT P4MM
34 22	SB_CLK100M_DMI_N	PP6D6	OMIT P4MM
58 26 23	PM_SYSRST_L	PP6D7	OMIT P4MM
58 44 23 67 60	PM_CLKRUN_L	PP6D8	OMIT P4MM
34 23	SB_CLK14P3M_TIMER	PP6D9	OMIT P4MM
34 23	SB_CLK48M_USBCTLR	PP6E0	OMIT P4MM

LAYOUT NOTE: PLACE NEAR U1200

12 7 5	FSB_A_L<6>	PP631	OMIT P4MM
12 7 5	FSB_ADSTB_L<0>	PP632	OMIT P4MM
12 7 5	FSB_A_L<27>	PP633	OMIT P4MM
12 7 5	FSB_ADSTB_L<1>	PP634	OMIT P4MM
12 7 5	FSB_D_L<0>	PP635	OMIT P4MM
12 7 5	FSB_DSTBN_L<0>	PP636	OMIT P4MM
12 7 5	FSB_DSTBP_L<0>	PP637	OMIT P4MM
12 7 5	FSB_DINV_L<0>	PP638	OMIT P4MM
12 7 5	FSB_D_L<16>	PP639	OMIT P4MM
12 7 5	FSB_DSTBN_L<1>	PP640	OMIT P4MM
12 7 5	FSB_DSTBP_L<1>	PP641	OMIT P4MM
12 7 5	FSB_DINV_L<1>	PP642	OMIT P4MM
12 7 5	FSB_D_L<41>	PP643	OMIT P4MM
12 7 5	FSB_DSTBN_L<2>	PP644	OMIT P4MM
12 7 5	FSB_DSTBP_L<2>	PP645	OMIT P4MM
12 7 5	FSB_DINV_L<2>	PP646	OMIT P4MM
12 7 5	FSB_D_L<59>	PP647	OMIT P4MM
12 7 5	FSB_DSTBN_L<3>	PP648	OMIT P4MM
12 7 5	FSB_DSTBP_L<3>	PP649	OMIT P4MM
12 7 5	FSB_DINV_L<3>	PP650	OMIT P4MM
12 7 5	FSB_LOCK_L	PP651	OMIT P4MM
12 7	FSB_HIT_L	PP652	OMIT P4MM
12 7	FSB_HITM_L	PP653	OMIT P4MM
12 7	FSB_BNR_L	PP654	OMIT P4MM
12 7	FSB_BREQ0_L	PP655	OMIT P4MM
12 7	FSB_DBSY_L	PP656	OMIT P4MM
12 7	FSB_DPWR_L	PP657	OMIT P4MM
12 7	FSB_REQ_L<0>	PP658	OMIT P4MM
12 7	FSB_REQ_L<1>	PP659	OMIT P4MM
12 7	FSB_REQ_L<2>	PP660	OMIT P4MM
12 7	FSB_REQ_L<3>	PP661	OMIT P4MM
12 7	FSB_REQ_L<4>	PP662	OMIT P4MM
34 12	FSB_CLK_NB_P	PP663	OMIT P4MM
34 12	FSB_CLK_NB_N	PP664	OMIT P4MM
75 26 14	VR_PWRGOOD_DELAY	PP665	OMIT P4MM
14	NB_RST_IN_L_R	PP666	OMIT P4MM
34 14	NB_CLK100M_GCLKIN_P	PP667	OMIT P4MM
34 14	NB_CLK100M_GCLKIN_N	PP668	OMIT P4MM
22 14	DMI_S2N_N<0>	PP673	OMIT P4MM
22 14	DMI_S2N_P<0>	PP674	OMIT P4MM
19 14	MEM_VREF_NB_0	PP6E1	OMIT P4MM
19 14	MEM_VREF_NB_1	PP675	OMIT P4MM
28 15	MEM_A_DQ<7>	PP676	OMIT P4MM
28 15	MEM_A_DQ<14>	PP677	OMIT P4MM
28 15	MEM_A_DQ<16>	PP678	OMIT P4MM
28 15	MEM_A_DQ<25>	PP679	OMIT P4MM
28 15	MEM_A_DQ<39>	PP680	OMIT P4MM
28 15	MEM_A_DQ<47>	PP681	OMIT P4MM
28 15	MEM_A_DQ<54>	PP682	OMIT P4MM
28 15	MEM_A_DQ<59>	PP683	OMIT P4MM
29 15	MEM_A_DQS_P<0>	PP684	OMIT P4MM
29 15	MEM_A_DQS_N<0>	PP685	OMIT P4MM
28 15	MEM_A_DQS_P<1>	PP686	OMIT P4MM
28 15	MEM_A_DQS_N<1>	PP687	OMIT P4MM
28 15	MEM_A_DQS_P<2>	PP688	OMIT P4MM
28 15	MEM_A_DQS_N<2>	PP689	OMIT P4MM
28 15	MEM_A_DQS_P<3>	PP690	OMIT P4MM
28 15	MEM_A_DQS_N<3>	PP691	OMIT P4MM
28 15	MEM_A_DQS_P<4>	PP692	OMIT P4MM
28 15	MEM_A_DQS_N<4>	PP693	OMIT P4MM
28 15	MEM_A_DQS_P<5>	PP694	OMIT P4MM
28 15	MEM_A_DQS_N<5>	PP695	OMIT P4MM
28 15	MEM_A_DQS_P<6>	PP696	OMIT P4MM
28 15	MEM_A_DQS_N<6>	PP697	OMIT P4MM
28 15	MEM_A_DQS_P<7>	PP698	OMIT P4MM
28 15	MEM_A_DQS_N<7>	PP699	OMIT P4MM
29 15	MEM_B_DQ<6>	PP6A0	OMIT P4MM
29 15	MEM_B_DQ<8>	PP6A1	OMIT P4MM
29 15	MEM_B_DQ<23>	PP6A2	OMIT P4MM
29 15	MEM_B_DQ<25>	PP6A3	OMIT P4MM
29 15	MEM_B_DQ<38>	PP6A4	OMIT P4MM
29 15	MEM_B_DQ<44>	PP6A5	OMIT P4MM
29 15	MEM_B_DQ<48>	PP6A6	OMIT P4MM
29 15	MEM_B_DQ<62>	PP6A7	OMIT P4MM
29 15	MEM_B_DQS_P<0>	PP6A8	OMIT P4MM
29 15	MEM_B_DQS_N<0>	PP6A9	OMIT P4MM
29 15	MEM_B_DQS_P<1>	PP6B0	OMIT P4MM
29 15	MEM_B_DQS_N<1>	PP6B1	OMIT P4MM
29 15	MEM_B_DQS_P<2>	PP6B2	OMIT P4MM
29 15	MEM_B_DQS_N<2>	PP6B3	OMIT P4MM
29 15	MEM_B_DQS_P<3>	PP6B4	OMIT P4MM
29 15	MEM_B_DQS_N<3>	PP6B5	OMIT P4MM
29 15	MEM_B_DQS_P<4>	PP6B6	OMIT P4MM
29 15	MEM_B_DQS_N<4>	PP6B7	OMIT P4MM
29 15	MEM_B_DQS_P<5>	PP6B8	OMIT P4MM
29 15	MEM_B_DQS_N<5>	PP6B9	OMIT P4MM
29 15	MEM_B_DQS_P<6>	PP6C0	OMIT P4MM
29 15	MEM_B_DQS_N<6>	PP6C1	OMIT P4MM
29 15	MEM_B_DQS_P<7>	PP6C2	OMIT P4MM
29 15	MEM_B_DQS_N<7>	PP6C3	OMIT P4MM

LAYOUT NOTE: PLACE NEAR U8400

89 87 5	FB_A_DQ<0>	PP8700	OMIT P4MM
89 87 5	FB_A_DQ<8>	PP8701	OMIT P4MM
89 87 5	FB_A_DQ<16>	PP8702	OMIT P4MM
89 87 5	FB_A_DQ<24>	PP8703	OMIT P4MM
89 87 5	FB_A_DQ<32>	PP8704	OMIT P4MM
89 87 5	FB_A_DQ<40>	PP8705	OMIT P4MM
89 87 5	FB_A_DQ<48>	PP8706	OMIT P4MM
89 87 5	FB_A_DQ<56>	PP8707	OMIT P4MM
89 87 5	FB_A_MA<3>	PP8708	OMIT P4MM
89 87	FB_A_RDQS<0>	PP8709	OMIT P4MM
89 87	FB_A_RDQS<1>	PP8710	OMIT P4MM
89 87	FB_A_RDQS<2>	PP8711	OMIT P4MM
89 87	FB_A_RDQS<3>	PP8712	OMIT P4MM
89 87	FB_A_RDQS<4>	PP8713	OMIT P4MM
89 87	FB_A_RDQS<5>	PP8714	OMIT P4MM
89 87	FB_A_RDQS<6>	PP8715	OMIT P4MM
89 87	FB_A_RDQS<7>	PP8716	OMIT P4MM
90 87 5	FB_B_DQ<0>	PP8720	OMIT P4MM
90 87 5	FB_B_DQ<8>	PP8721	OMIT P4MM
90 87 5	FB_B_DQ<16>	PP8722	OMIT P4MM
90 87 5	FB_B_DQ<24>	PP8723	OMIT P4MM
90 87 5	FB_B_DQ<32>	PP8724	OMIT P4MM
90 87 5	FB_B_DQ<40>	PP8725	OMIT P4MM
90 87 5	FB_B_DQ<48>	PP8726	OMIT P4MM
90 87 5	FB_B_DQ<56>	PP8727	OMIT P4MM
90 87 5	FB_B_MA<3>	PP8728	OMIT P4MM
90 87	FB_B_RDQS<0>	PP8729	OMIT P4MM
90 87	FB_B_RDQS<1>	PP8730	OMIT P4MM
90 87	FB_B_RDQS<2>	PP8731	OMIT P4MM
90 87	FB_B_RDQS<3>	PP8732	OMIT P4MM
90 87	FB_B_RDQS<4>	PP8733	OMIT P4MM
90 87	FB_B_RDQS<5>	PP8734	OMIT P4MM
90 87	FB_B_RDQS<6>	PP8735	OMIT P4MM
90 87	FB_B_RDQS<7>	PP8736	OMIT P4MM
84 34	GPU_CLK100M_PCIE_P	PP8400	OMIT P4MM
84 34	GPU_CLK100M_PCIE_N	PP8401	OMIT P4MM

LAYOUT NOTE: PLACE NEAR U4101

41 34	ENET_CLK100M_PCIE_P	PP4100	OMIT P4MM
41 34	ENET_CLK100M_PCIE_N	PP4101	OMIT P4MM

PLACE NEAR U8900

89 87	FB_A_CKE<0>	PP8900	OMIT P4MM
89 87	FB_A_CLK_P<0>	PP8901	OMIT P4MM
89 87	FB_A_CLK_N<0>	PP8902	OMIT P4MM
89 87	FB_A_CS_L<0>	PP8903	OMIT P4MM
89 87	FB_A_WE_L<0>	PP8904	OMIT P4MM
89 87	FB_A_CAS_L<0>	PP8905	OMIT P4MM
89 87 5	FB_A_MA<3>	PP8906	OMIT P4MM
89 87	FB_A_RAS_L<0>	PP8907	OMIT P4MM
90 89 88 5	DRAM_RST	PP8908	OMIT P4MM
89 87	FB_A_WDQS<0>	PP8909	OMIT P4MM
89 87	FB_A_WDQS<1>	PP8910	OMIT P4MM
89 87	FB_A_WDQS<3>	PP8911	OMIT P4MM
89 87	FB_A_WDQS<2>	PP8912	OMIT P4MM
89 87 5	FB_A_DQ<0>	PP8913	OMIT P4MM
89 87 5	FB_A_DQ<8>	PP8914	OMIT P4MM
89 87 5	FB_A_DQ<16>	PP8915	OMIT P4MM
89 87 5	FB_A_DQ<24>	PP8916	OMIT P4MM

PLACE NEAR U9000

90 87	FB_B_CKE<0>	PP9000	OMIT P4MM
90 87	FB_B_CLK_P<0>	PP9001	OMIT P4MM
90 87	FB_B_CLK_N<0>	PP9002	OMIT P4MM
90 87	FB_B_CS_L<0>	PP9003	OMIT P4MM
90 87	FB_B_WE_L<0>	PP9004	OMIT P4MM
90 87	FB_B_CAS_L<0>	PP9005	OMIT P4MM
90 87	FB_B_RAS_L<0>	PP9006	OMIT P4MM
90 87 5	FB_B_MA<3>	PP9007	OMIT P4MM
90 89 88 5	DRAM_RST	PP9008	OMIT P4MM
90 87	FB_B_WDQS<0>	PP9009	OMIT P4MM
90 87	FB_B_WDQS<1>	PP9010	OMIT P4MM
90 87	FB_B_WDQS<3>	PP9011	OMIT P4MM
90 87	FB_B_WDQS<2>	PP9012	OMIT P4MM
90 87 5	FB_B_DQ<0>	PP9013	OMIT P4MM
90 87 5	FB_B_DQ<8>	PP9014	OMIT P4MM
90 87 5	FB_B_DQ<16>	PP9015	OMIT P4MM
90 87 5	FB_B_DQ<24>	PP9016	OMIT P4MM

PLACE NEAR U8950

89 87	FB_A_CKE<1>	PP8920	OMIT P4MM
89 87	FB_A_CLK_P<1>	PP8921	OMIT P4MM
89 87	FB_A_CLK_N<1>	PP8922	OMIT P4MM
89 87	FB_A_CS_L<1>	PP8923	OMIT P4MM
89 87	FB_A_WE_L<1>	PP8924	OMIT P4MM
89 87	FB_A_CAS_L<1>	PP8925	OMIT P4MM
89 87	FB_A_RAS_L<1>	PP8926	OMIT P4MM
89 87 5	FB_A_MA<3>	PP8927	OMIT P4MM
90 89 88 5	DRAM_RST	PP8928	OMIT P4MM
89 87	FB_A_WDQS<5>	PP8929	OMIT P4MM
89 87	FB_A_WDQS<6>	PP8930	OMIT P4MM
89 87	FB_A_WDQS<4>	PP8931	OMIT P4MM
89 87	FB_A_WDQS<7>	PP8932	OMIT P4MM
89 87 5	FB_A_DQ<32>	PP8933	OMIT P4MM
89 87 5	FB_A_DQ<40>	PP8934	OMIT P4MM
89 87 5	FB_A_DQ<48>	PP8935	OMIT P4MM
89 87 5	FB_A_DQ<56>	PP8936	OMIT P4MM

PLACE NEAR U9050

90 87	FB_B_CKE<1>	PP9020	OMIT P4MM
90 87	FB_B_CLK_P<1>	PP9021	OMIT P4MM
90 87	FB_B_CLK_N<1>	PP9022	OMIT P4MM
90 87	FB_B_CS_L<1>	PP9023	OMIT P4MM
90 87	FB_B_WE_L<1>	PP9024	OMIT P4MM
90 87	FB_B_CAS_L<1>	PP9025	OMIT P4MM
90 87	FB_B_RAS_L<1>	PP9026	OMIT P4MM
90 87 5	FB_B_MA<3>	PP9027	OMIT P4MM
90 89 88 5	DRAM_RST	PP9028	OMIT P4MM
90 87	FB_B_WDQS<5>	PP9029	OMIT P4MM
90 87	FB_B_WDQS<6>	PP9030	OMIT P4MM
90 87	FB_B_WDQS<7>	PP9031	OMIT P4MM
90 87	FB_B_WDQS<4>	PP9032	OMIT P4MM
90 87 5	FB_B_DQ<32>	PP9033	OMIT P4MM
90 87 5	FB_B_DQ<40>	PP9034	OMIT P4MM
90 87 5	FB_B_DQ<48>	PP9035	OMIT P4MM
90 87 5	FB_B_DQ<56>	PP9036	OMIT P4MM

PLACE NEAR R1210 AND R1211

12	NB_FSB_VREF	PP1200	SM-TP50-TOP
19 12 6	=PP1V05_S0_FSB_NB	PP1201	SM-TP50-TOP
		PP1202	SM-TP50-TOP

PLACE NEAR R0705 AND R0706

11 9 8 7 6	=PP1V05_S0_CPU	PP700	SM-TP50-TOP
7	CPU_GTLREF	PP701	SM-TP50-TOP
		PP702	SM-TP50-TOP

PLACE NEAR R2800 AND R2801

29 28 6	=PP1V8_S3_MEM	PP2800	SM-TP50-TOP
29 28	MEM_VREF	PP2801	SM-TP50-TOP
		PP2802	SM-TP50-TOP

77 76 66 65 59 26 11 6 83 81 80 79	IN	PP3V3_S5	FUNC_TEST=TRUE
83 81 80 79 59 6	IN	PP5V_S5	FUNC_TEST=TRUE
88 83 81 80 79 78 77 11 6	IN	PP12V_S5	FUNC_TEST=TRUE
79 6	IN	PP1V8_S3	FUNC_TEST=TRUE
76 75 6	IN	PPVCORE_CPU	FUNC_TEST=TRUE
26 25 24 21	IN	PP3V3_S5_SB_RTC	FUNC_TEST=TRUE
		8 TESTPOINTS	
	IN		FUNC_TEST=TRUE

60 59 58	IN	SMC_TCK	FUNC_TEST=TRUE
60 59 58	IN	SMC_TDI	FUNC_TEST=TRUE
60 59 58	IN	SMC_TDO	FUNC_TEST=TRUE
60 59 58	IN	SMC_TMS	FUNC_TEST=TRUE
60 58	IN	SMC_TRST_L	FUNC_TEST=TRUE
60 59 58	IN	SMC_TX_L	FUNC_TEST=TRUE
60 59 58	IN	SMC_RX_L	FUNC_TEST=TRUE
59	IN	SMC_MANUAL_RST_L	FUNC_TEST=TRUE
11 7	IN	XDP_TCK	FUNC_TEST=TRUE
11 7	IN	XDP_TDI	FUNC_TEST=TRUE
11 7	IN	XDP_TDO	FUNC_TEST=TRUE
11 7	IN	XDP_TMS	FUNC_TEST=TRUE
11 7	IN	XDP_TRST_L	FUNC_TEST=TRUE
59	IN	POWER_BUTTON_L	FUNC_TEST=TRUE
26	IN	SW_RST_BTN_L	FUNC_TEST=TRUE

34	IN	TP_PCI_CLK_SPARE	NO_TEST=TRUE
29	IN	TP_MEM_B_A<14>	NO_TEST=TRUE
29	IN	TP_MEM_B_A<15>	NO_TEST=TRUE
43	IN	ENET_MDI_R_N<0>	NO_TEST=TRUE
43	IN	ENET_MDI_R_N<1>	NO_TEST=TRUE
43	IN	ENET_MDI_R_N<2>	NO_TEST=TRUE
43	IN	ENET_MDI_R_N<3>	NO_TEST=TRUE
43	IN	ENET_MDI_R_P<0>	NO_TEST=TRUE
43	IN	ENET_MDI_R_P<1>	NO_TEST=TRUE
43	IN	ENET_MDI_R_P<2>	NO_TEST=TRUE
43	IN	ENET_MDI_R_P<3>	NO_TEST=TRUE

MISC GROUND VIAS

ZH500 HOLE-VIA	ZH510 HOLE-VIA	ZH520 HOLE-VIA
ZH501 HOLE-VIA	ZH511 HOLE-VIA	ZH521 HOLE-VIA
ZH502 HOLE-VIA	ZH512 HOLE-VIA	ZH522 HOLE-VIA
ZH503 HOLE-VIA	ZH513 HOLE-VIA	ZH523 HOLE-VIA
ZH504 HOLE-VIA	ZH514 HOLE-VIA	ZH524 HOLE-VIA
ZH505 HOLE-VIA	ZH515 HOLE-VIA	ZH525 HOLE-VIA
ZH506 HOLE-VIA	ZH516 HOLE-VIA	ZH526 HOLE-VIA
ZH507 HOLE-VIA	ZH517 HOLE-VIA	ZH527 HOLE-VIA
ZH508 HOLE-VIA	ZH518 HOLE-VIA	ZH528 HOLE-VIA
ZH509 HOLE-VIA	ZH519 HOLE-VIA	ZH529 HOLE-VIA

FUNC TEST 1 OF 2

NOTICE OF PROPRIETARY PROPERTY

THE INFORMATION CONTAINED HEREIN IS THE PROPRIETARY PROPERTY OF APPLE COMPUTER, INC. THE POSSESSOR AGREES TO THE FOLLOWING

I TO MAINTAIN THE DOCUMENT IN CONFIDENCE

II NOT TO REPRODUCE OR COPY IT

III NOT TO REVEAL OR PUBLISH IN WHOLE OR PART

APPLE COMPUTER INC.

SIZE	DRAWING NUMBER	REV.
D	051-7148	13
SCALE NONE	SHT 5 OF 110	

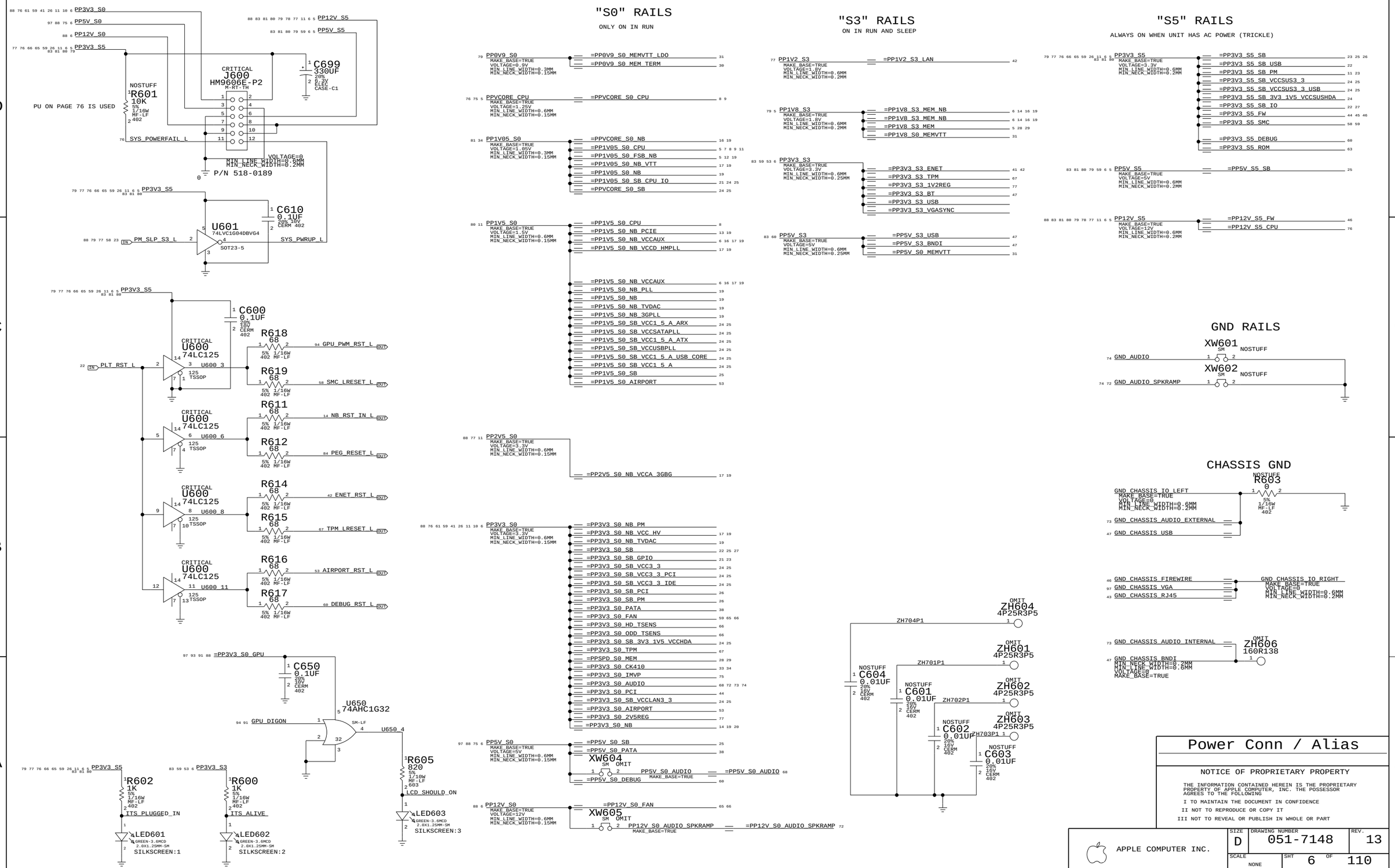
"S0" RAILS
ONLY ON IN RUN
"S3" RAILS
ON IN RUN AND SLEEP
"S5" RAILS
ALWAYS ON WHEN UNIT HAS AC POWER (TRICKLE)
GND RAILS
CHASSIS GND
PU ON PAGE 76 IS USED
CRITICAL
J600
HM9606E-P2
P/N 518-0189
U601
74LVC1G04DBVG4
U600
74LC125
U650
74AHC1G32
XW604
XW605
XW601
XW602
R603
Power Conn / Alias
NOTICE OF PROPRIETARY PROPERTY
THE INFORMATION CONTAINED HEREIN IS THE PROPRIETARY PROPERTY OF APPLE COMPUTER, INC. THE POSSESSOR AGREES TO THE FOLLOWING
I TO MAINTAIN THE DOCUMENT IN CONFIDENCE
II NOT TO REPRODUCE OR COPY IT
III NOT TO REVEAL OR PUBLISH IN WHOLE OR PART
APPLE COMPUTER INC.
SIZE D
DRAWING NUMBER 051-7148
REV. 13
SCALE NONE
SHT 6 OF 110

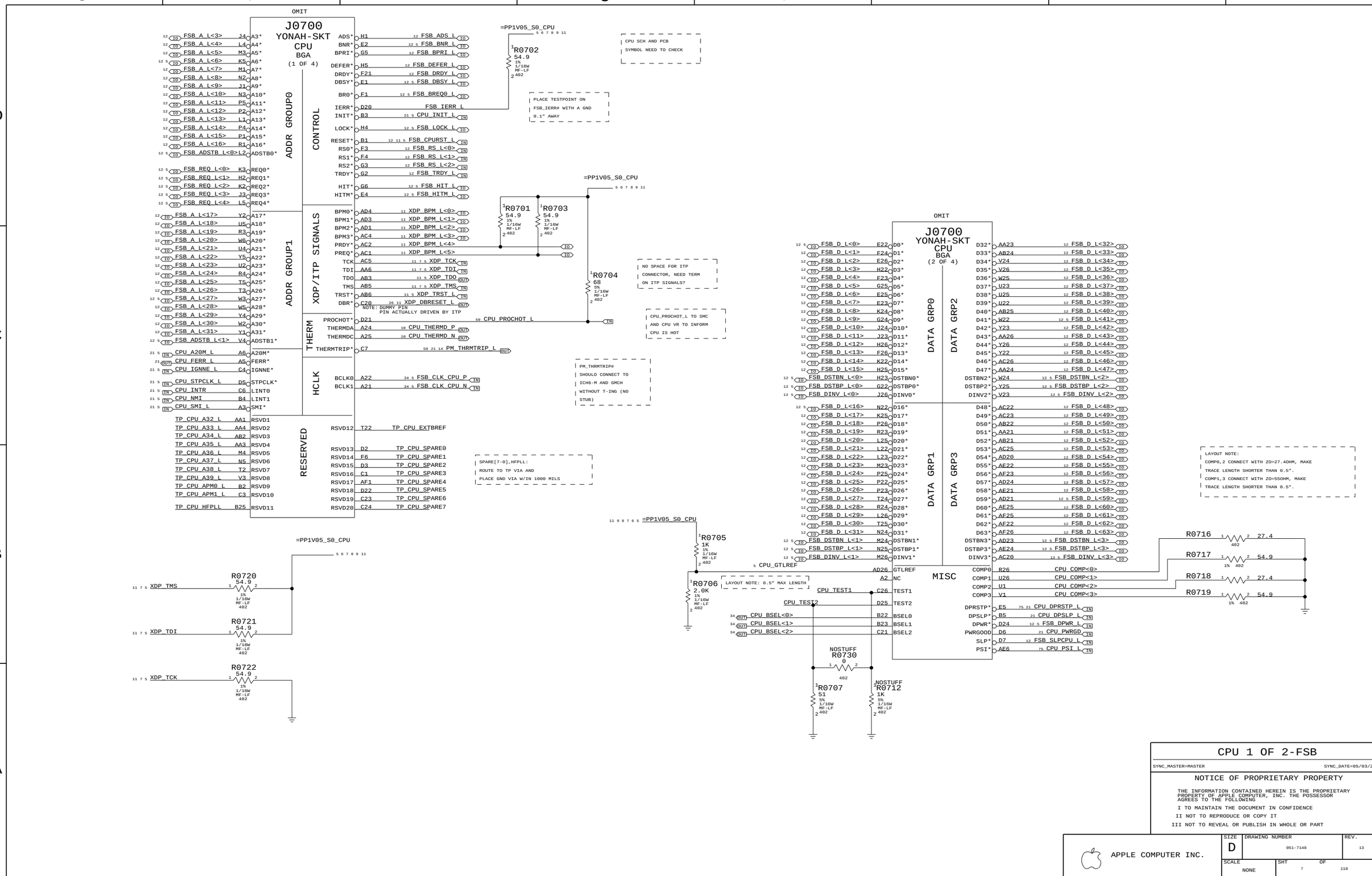

CPU 1 OF 2-FSB

SYNC_MASTER=MASTER SYNC_DATE=05/03/2005

NOTICE OF PROPRIETARY PROPERTY

THE INFORMATION CONTAINED HEREIN IS THE PROPRIETARY PROPERTY OF APPLE COMPUTER, INC. THE POSSESSOR AGREES TO THE FOLLOWING

I TO MAINTAIN THE DOCUMENT IN CONFIDENCE

II NOT TO REPRODUCE OR COPY IT

III NOT TO REVEAL OR PUBLISH IN WHOLE OR PART

APPLE COMPUTER INC.

SIZE	DRAWING NUMBER	REV.
D	051-7148	13
SCALE NONE	SHT 7 OF 110	

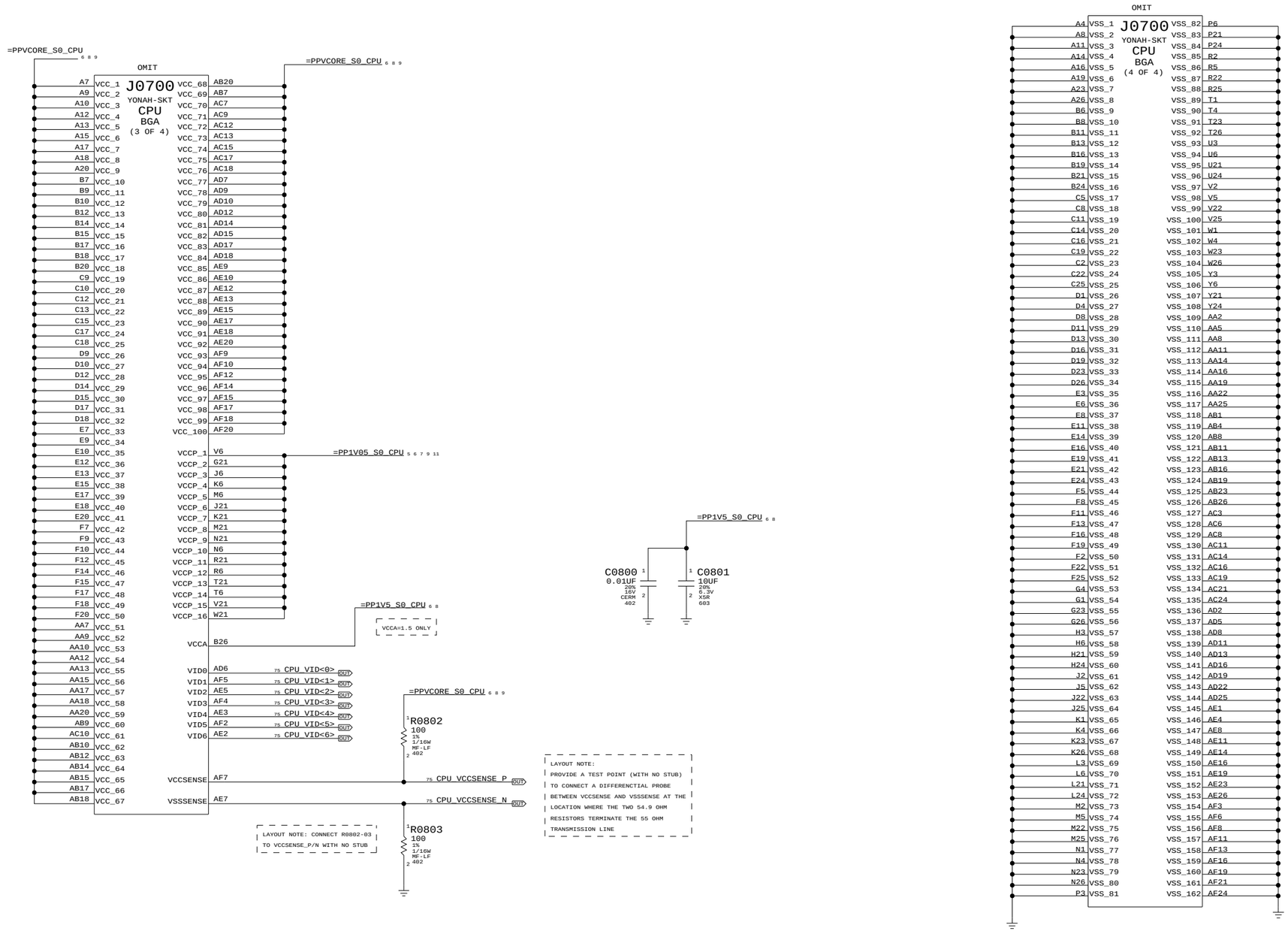

CPU 2 OF 2-PWR/GND

SYNC_MASTER=MASTER SYNC_DATE=05/03/2005

NOTICE OF PROPRIETARY PROPERTY

THE INFORMATION CONTAINED HEREIN IS THE PROPRIETARY PROPERTY OF APPLE COMPUTER, INC. THE POSSESSOR AGREES TO THE FOLLOWING

I TO MAINTAIN THE DOCUMENT IN CONFIDENCE

II NOT TO REPRODUCE OR COPY IT

III NOT TO REVEAL OR PUBLISH IN WHOLE OR PART

APPLE COMPUTER INC.

SIZE	DRAWING NUMBER	REV.
D	051-7148	13

SCALE NONE SHT 8 OF 110

CPU HEATSINK MOUNTING HOLES

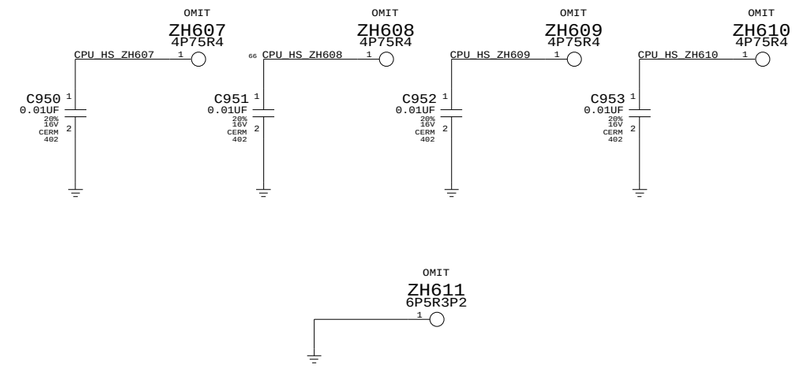

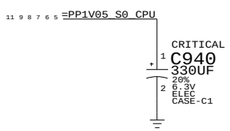

VCCP CORE DECOUPLING

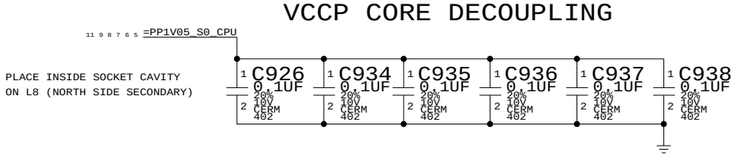

VCC CORE DECOUPLING

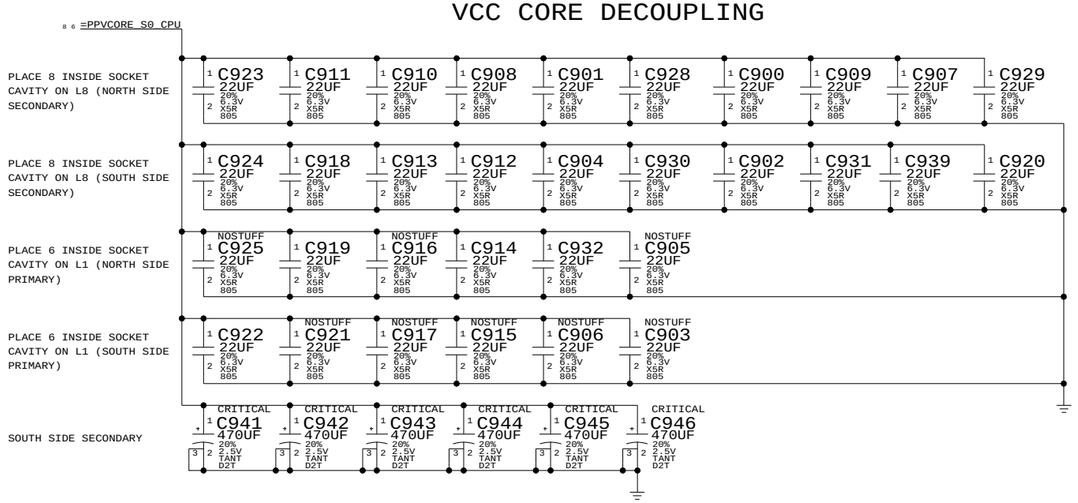

CPU DECAPS & VID<>

NOTICE OF PROPRIETARY PROPERTY

THE INFORMATION CONTAINED HEREIN IS THE PROPRIETARY PROPERTY OF APPLE COMPUTER, INC. THE POSSESSOR AGREES TO THE FOLLOWING

I TO MAINTAIN THE DOCUMENT IN CONFIDENCE

II NOT TO REPRODUCE OR COPY IT

III NOT TO REVEAL OR PUBLISH IN WHOLE OR PART

APPLE COMPUTER INC.

SIZE	DRAWING NUMBER	REV.
D	051-7148	13
SCALE NONE	SHT 9 OF 110	

CPU THERMAL SENSOR

NOTE:
IF CPU T DIODE TO BE READ IN OFF STATE,
THEN THIS SHOULD BE S5

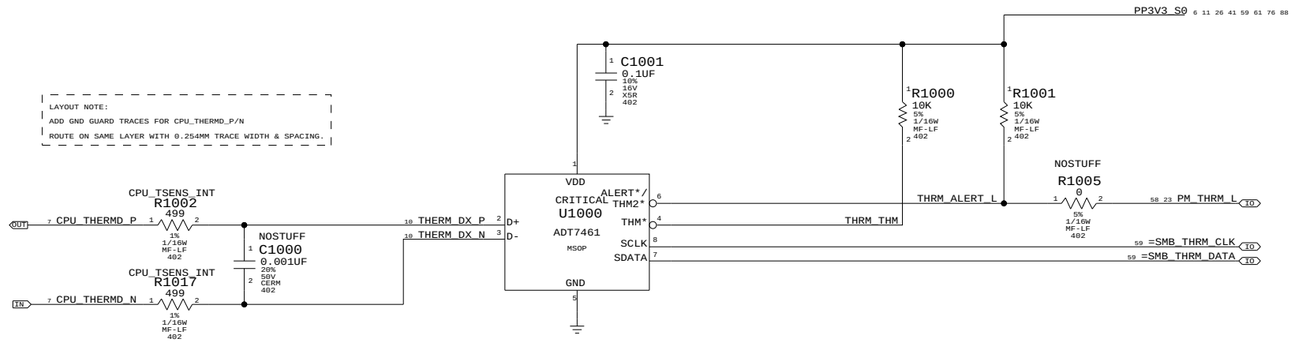

NOTE: SYMBOL SHOULD BE SHOWN ADT7461A

LAYOUT NOTE:
PLACE R1002 AND R1018 SUCH THAT THEY SHARE ONE PAD
PLACE R1017 AND R1019 SUCH THAT THEY SHARE ONE PAD

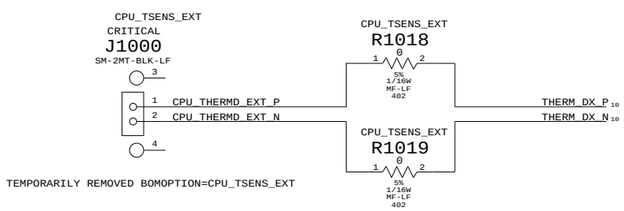

TEMPORARILY REMOVED BOMOPTION=CPU_TSENS_EXT

CPU TEMP SENSOR

NOTICE OF PROPRIETARY PROPERTY

THE INFORMATION CONTAINED HEREIN IS THE PROPRIETARY PROPERTY OF APPLE COMPUTER, INC. THE POSSESSOR AGREES TO THE FOLLOWING

I TO MAINTAIN THE DOCUMENT IN CONFIDENCE
II NOT TO REPRODUCE OR COPY IT
III NOT TO REVEAL OR PUBLISH IN WHOLE OR PART

APPLE COMPUTER INC.

SIZE	DRAWING NUMBER	REV.
D	051-7148	13

SCALE NONE | SHT 10 OF 110

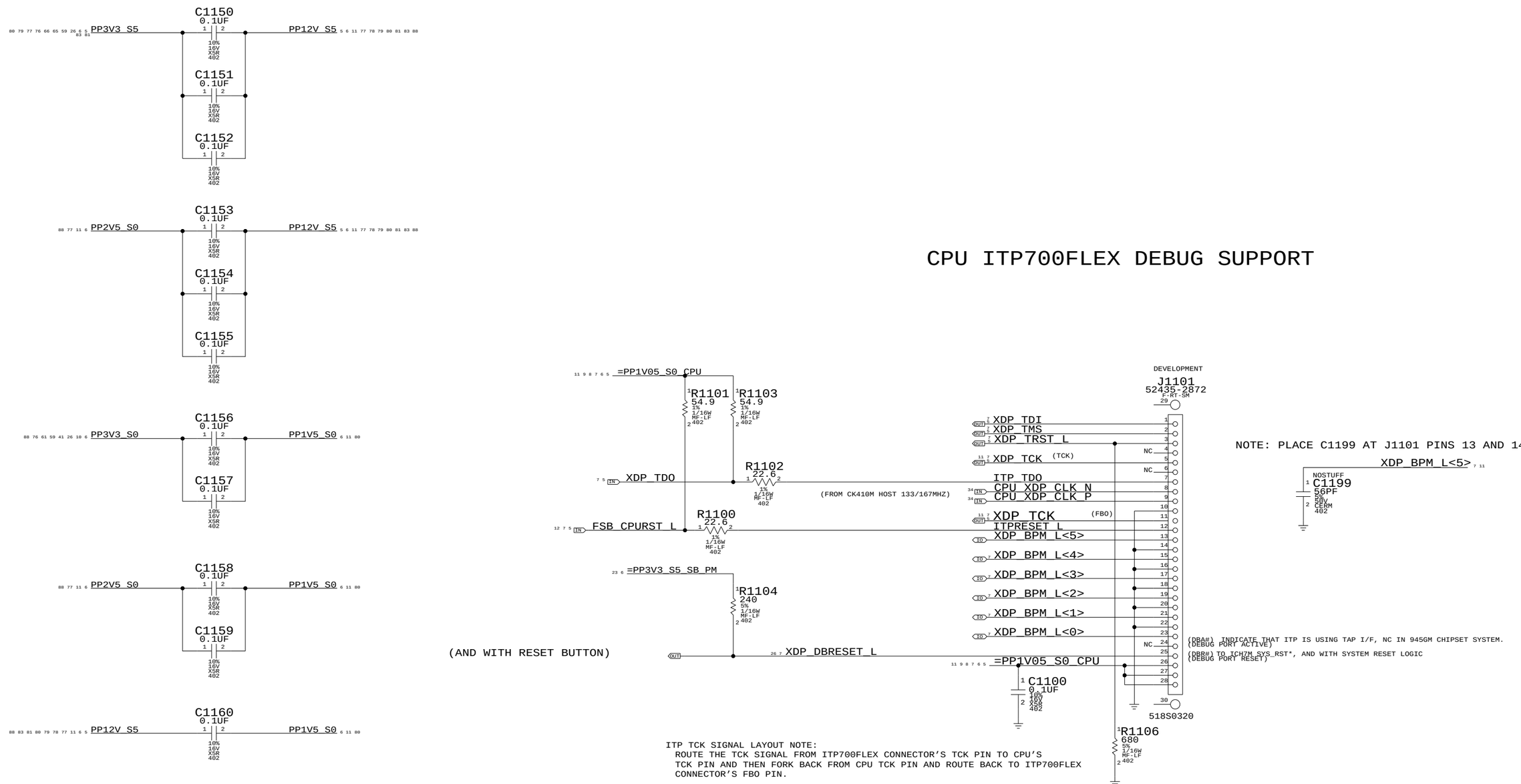

CPU ITP700FLEX DEBUG SUPPORT

CPU ITP700FLEX DEBUG

SYNC_MASTER=MASTER SYNC_DATE=5/23/05

NOTICE OF PROPRIETARY PROPERTY

THE INFORMATION CONTAINED HEREIN IS THE PROPRIETARY PROPERTY OF APPLE COMPUTER, INC. THE POSSESSOR AGREES TO THE FOLLOWING

I TO MAINTAIN THE DOCUMENT IN CONFIDENCE

II NOT TO REPRODUCE OR COPY IT

III NOT TO REVEAL OR PUBLISH IN WHOLE OR PART

APPLE COMPUTER INC.

SIZE	DRAWING NUMBER	REV.
D	051-7148	13

SCALE NONE SHT 11 OF 110

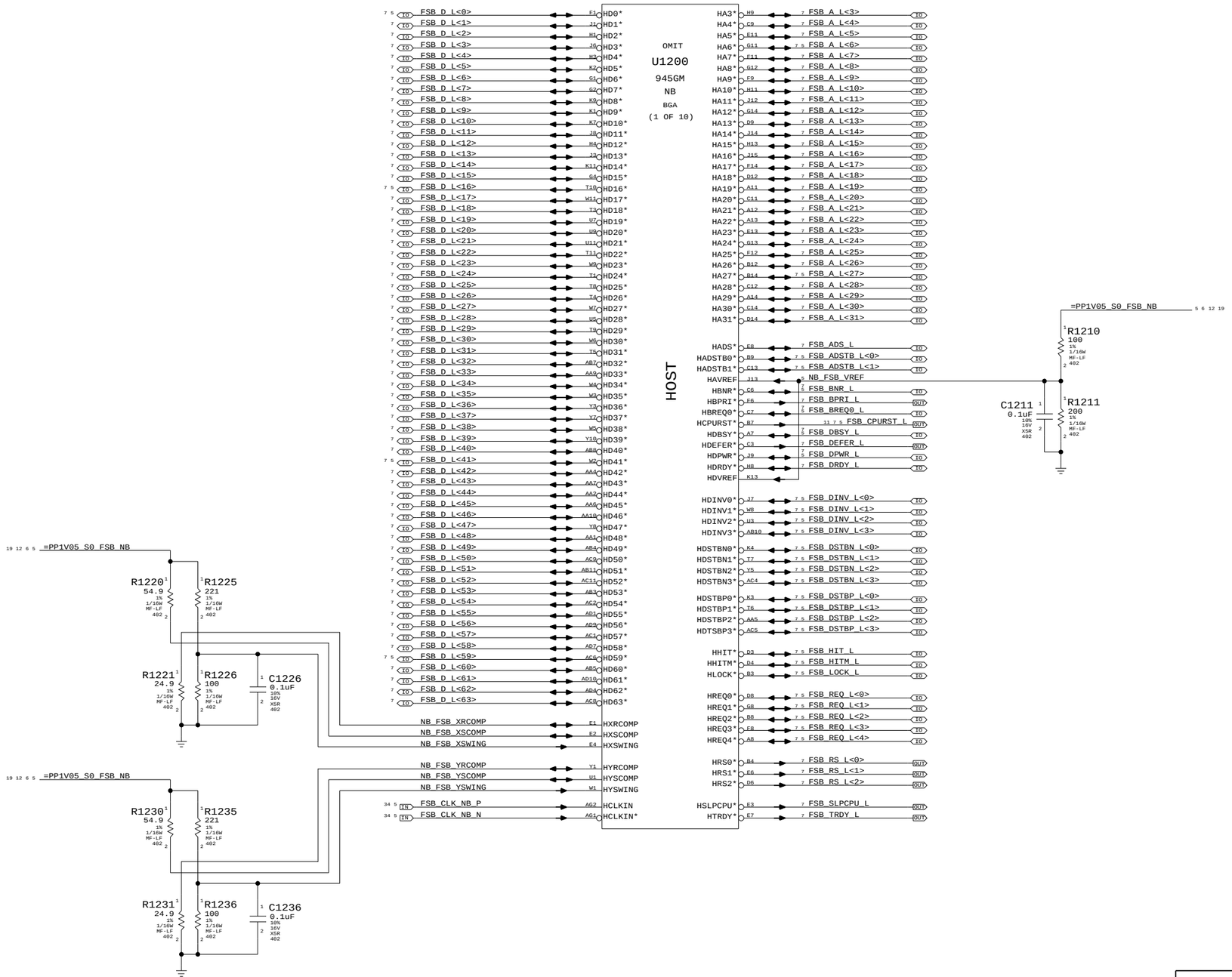

NB CPU Interface

SYNC_MASTER=(MASTER) SYNC_DATE=(MASTER)

NOTICE OF PROPRIETARY PROPERTY

THE INFORMATION CONTAINED HEREIN IS THE PROPRIETARY PROPERTY OF APPLE COMPUTER, INC. THE POSSESSOR AGREES TO THE FOLLOWING

I TO MAINTAIN THE DOCUMENT IN CONFIDENCE

II NOT TO REPRODUCE OR COPY IT

III NOT TO REVEAL OR PUBLISH IN WHOLE OR PART

APPLE COMPUTER INC.

SIZE	DRAWING NUMBER	REV.
D	051-7148	13

SCALE	SHT	OF
NONE	12	110

LVDS Disable

Can leave all signals NC if LVDS is not implemented
Tie VCC_TXLVDS and VCCA_LVDS to GND. If SDVO is used
VCCD_LVDS must remain powered with proper decoupling.
Otherwise, tie VCCD_LVDS to GND also.

TV-Out Signal Usage:

Composite: DACA only
S-Video: DACB & DACC only
Component: DACA, DACB & DACC

Unused DAC outputs must remain powered, but can omit filtering components. Unused DAC outputs should connect to GND through 75-ohm resistors.

TV-Out Disable

Tie DACx_OUT, IRTNx, and IREF to 1.5V power rail.
Tie VCCD_TVDAC, VCCD_QTVDAC, VCCA_TVDACx, and
VCCA_TVBG to 1.5V power rail. Tie VSSA_TVBG to GND.

CRT Disable

Tie R/R#/G/G#/B/B# and IREF to VCC Core rail, tie
HSYNC and VSYNC to GND. Tie VCCA_CRTDAC to VCC Core
rail, and tie VSSA_CRTDAC and VCC_SYNC to GND.

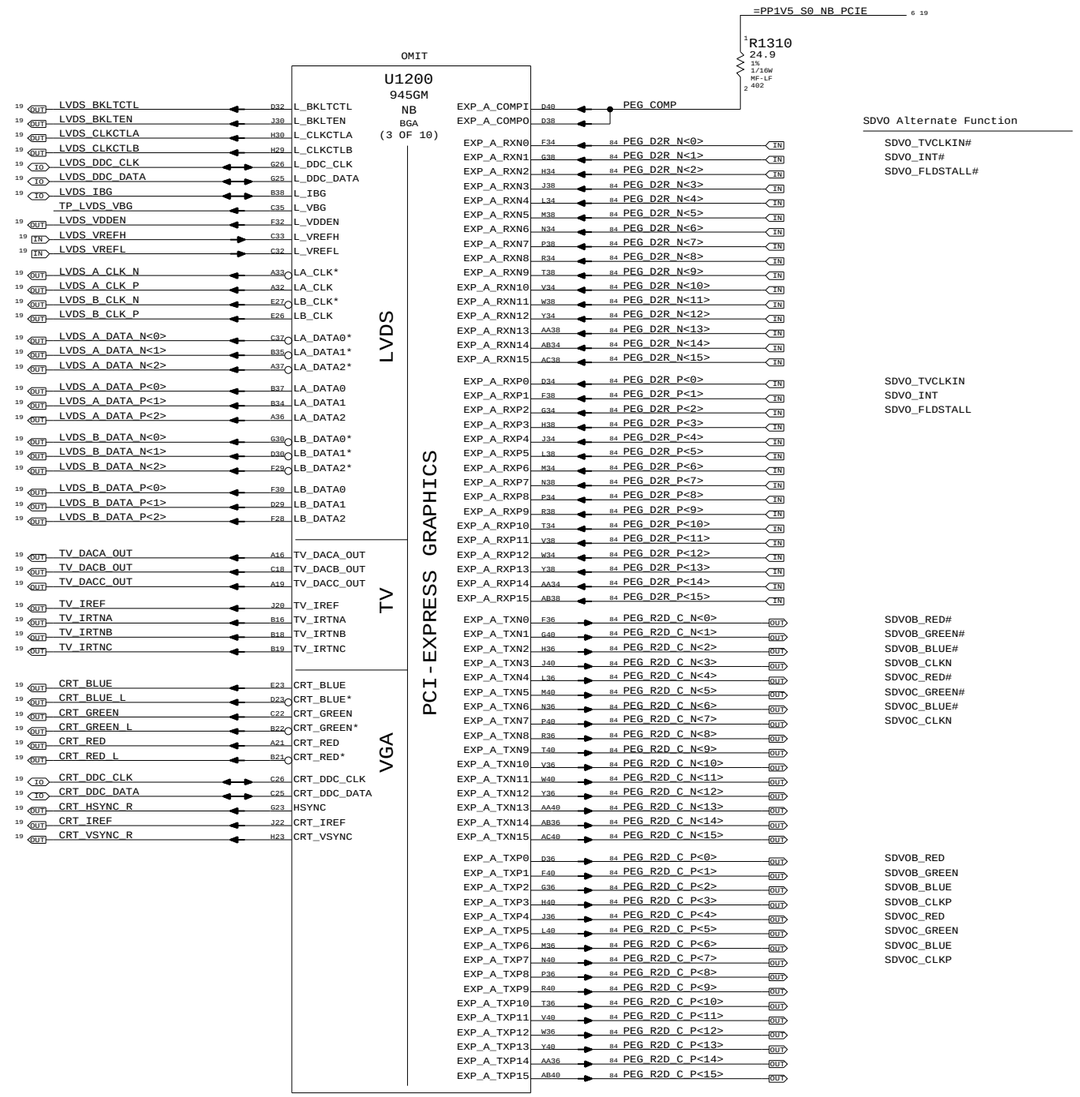

SDVO Alternate Function

SDVO_TVCLKIN#
SDVO_INT#
SDVO_FLDSTALL#

SDVO_TVCLKIN
SDVO_INT
SDVO_FLDSTALL

SDVOB_RED#
SDVOB_GREEN#
SDVOB_BLUE#
SDVOB_CLKN
SDVOC_RED#
SDVOC_GREEN#
SDVOC_BLUE#
SDVOC_CLKN

SDVOB_RED
SDVOB_GREEN
SDVOB_BLUE
SDVOB_CLKP
SDVOC_RED
SDVOC_GREEN
SDVOC_BLUE
SDVOC_CLKP

NB PEG / Video Interfaces

SYNC_MASTER=(MASTER) SYNC_DATE=(MASTER)

NOTICE OF PROPRIETARY PROPERTY

THE INFORMATION CONTAINED HEREIN IS THE PROPRIETARY PROPERTY OF APPLE COMPUTER, INC. THE POSSESSOR AGREES TO THE FOLLOWING

I TO MAINTAIN THE DOCUMENT IN CONFIDENCE
II NOT TO REPRODUCE OR COPY IT
III NOT TO REVEAL OR PUBLISH IN WHOLE OR PART

APPLE COMPUTER INC.

SIZE	DRAWING NUMBER	REV.
D	051-7148	13

SCALE NONE SHT 13 OF 110

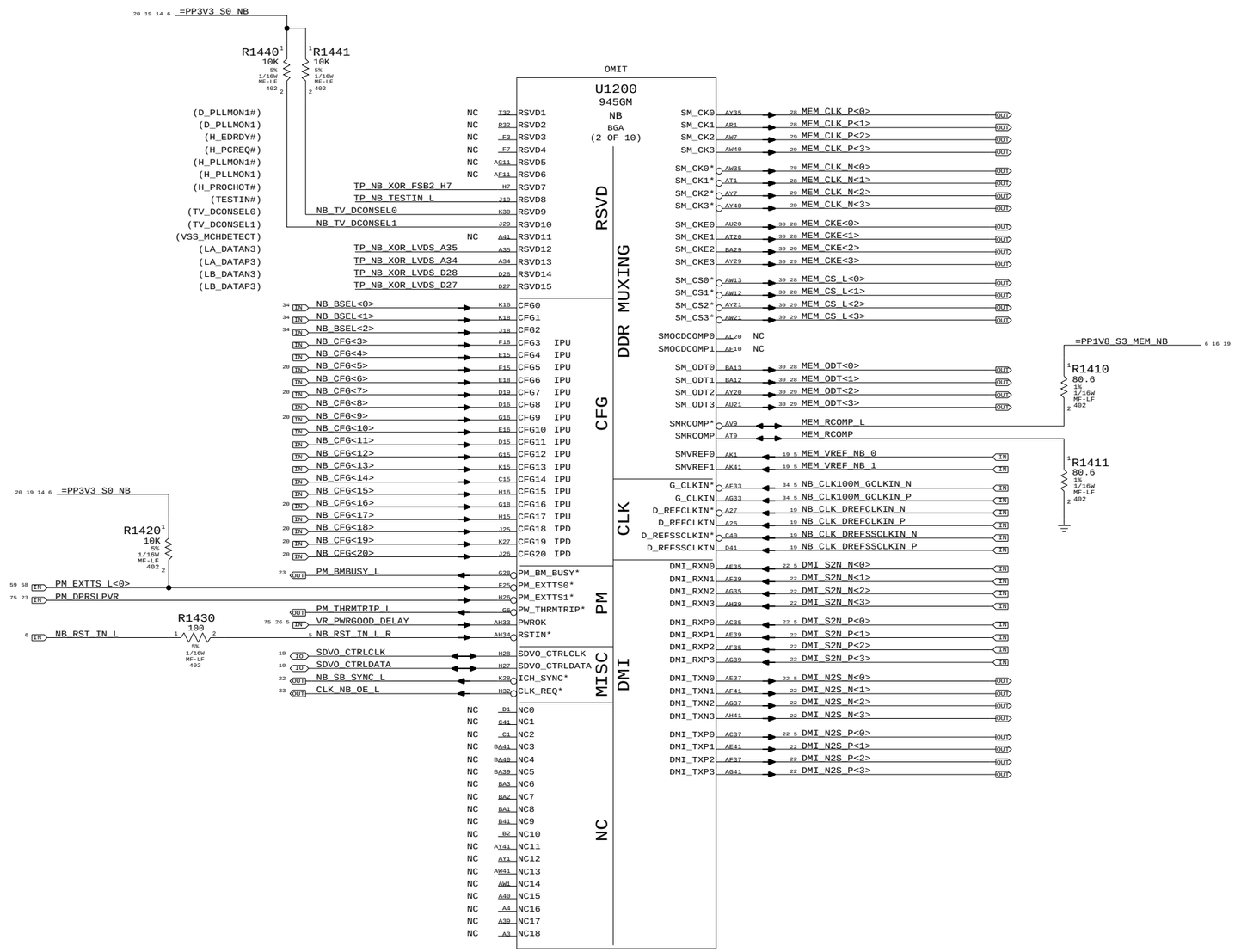

NB Misc Interfaces

SYNC_MASTER=(MASTER) SYNC_DATE=(MASTER)

NOTICE OF PROPRIETARY PROPERTY

THE INFORMATION CONTAINED HEREIN IS THE PROPRIETARY PROPERTY OF APPLE COMPUTER, INC. THE POSSESSOR AGREES TO THE FOLLOWING

I TO MAINTAIN THE DOCUMENT IN CONFIDENCE

II NOT TO REPRODUCE OR COPY IT

III NOT TO REVEAL OR PUBLISH IN WHOLE OR PART

APPLE COMPUTER INC.

SIZE	DRAWING NUMBER	REV.
D	051-7148	13

SCALE NONE SHT 14 OF 110

OMIT

U1200
945GM
NB
BGA
(4 OF 10)

DDR SYSTEM MEMORY A

MEM_A_DQ<0>	AJ35	SA_DQ0	SA_BS0	AU12	MEM_A_BS<0>
MEM_A_DQ<1>	AJ34	SA_DQ1	SA_BS1	AV14	MEM_A_BS<1>
MEM_A_DQ<2>	AM31	SA_DQ2	SA_BS2	BA20	MEM_A_BS<2>
MEM_A_DQ<3>	AM33	SA_DQ3	SA_CAS*	AY13	MEM_A_CAS_L
MEM_A_DQ<4>	AJ36	SA_DQ4	SA_DM0	AJ33	MEM_A_DM<0>
MEM_A_DQ<5>	AK35	SA_DQ5	SA_DM1	AM35	MEM_A_DM<1>
MEM_A_DQ<6>	AJ32	SA_DQ6	SA_DM2	AL26	MEM_A_DM<2>
MEM_A_DQ<7>	AH31	SA_DQ7	SA_DM3	AN22	MEM_A_DM<3>
MEM_A_DQ<8>	AN35	SA_DQ8	SA_DM4	AM14	MEM_A_DM<4>
MEM_A_DQ<9>	AP33	SA_DQ9	SA_DM5	AL9	MEM_A_DM<5>
MEM_A_DQ<10>	AR31	SA_DQ10	SA_DM6	AR3	MEM_A_DM<6>
MEM_A_DQ<11>	AP31	SA_DQ11	SA_DM7	AH4	MEM_A_DM<7>
MEM_A_DQ<12>	AN38	SA_DQ12			
MEM_A_DQ<13>	AM36	SA_DQ13	SA_DQS0	AK33	MEM_A_DQS_P<0>
MEM_A_DQ<14>	AM34	SA_DQ14	SA_DQS1	AT33	MEM_A_DQS_P<1>
MEM_A_DQ<15>	AN33	SA_DQ15	SA_DQS2	AN28	MEM_A_DQS_P<2>
MEM_A_DQ<16>	AK26	SA_DQ16	SA_DQS3	AM22	MEM_A_DQS_P<3>
MEM_A_DQ<17>	AL27	SA_DQ17	SA_DQS4	AN12	MEM_A_DQS_P<4>
MEM_A_DQ<18>	AM26	SA_DQ18	SA_DQS5	AN8	MEM_A_DQS_P<5>
MEM_A_DQ<19>	AN24	SA_DQ19	SA_DQS6	AP3	MEM_A_DQS_P<6>
MEM_A_DQ<20>	AK28	SA_DQ20	SA_DQS7	AG5	MEM_A_DQS_P<7>
MEM_A_DQ<21>	AL28	SA_DQ21	SA_DQS0*	AK32	MEM_A_DQS_N<0>
MEM_A_DQ<22>	AM24	SA_DQ22	SA_DQS1*	AU33	MEM_A_DQS_N<1>
MEM_A_DQ<23>	AP26	SA_DQ23	SA_DQS2*	AN27	MEM_A_DQS_N<2>
MEM_A_DQ<24>	AP23	SA_DQ24	SA_DQS3*	AM21	MEM_A_DQS_N<3>
MEM_A_DQ<25>	AL22	SA_DQ25	SA_DQS4*	AM12	MEM_A_DQS_N<4>
MEM_A_DQ<26>	AP21	SA_DQ26	SA_DQS5*	AL8	MEM_A_DQS_N<5>
MEM_A_DQ<27>	AN20	SA_DQ27	SA_DQS6*	AN3	MEM_A_DQS_N<6>
MEM_A_DQ<28>	AL23	SA_DQ28	SA_DQS7*	AH5	MEM_A_DQS_N<7>
MEM_A_DQ<29>	AP24	SA_DQ29			
MEM_A_DQ<30>	AP20	SA_DQ30	SA_MA0	AY16	MEM_A_A<0>
MEM_A_DQ<31>	AT21	SA_DQ31	SA_MA1	AU14	MEM_A_A<1>
MEM_A_DQ<32>	AR12	SA_DQ32	SA_MA2	AW16	MEM_A_A<2>
MEM_A_DQ<33>	AR14	SA_DQ33	SA_MA3	BA16	MEM_A_A<3>
MEM_A_DQ<34>	AP13	SA_DQ34	SA_MA4	BA17	MEM_A_A<4>
MEM_A_DQ<35>	AP12	SA_DQ35	SA_MA5	AU16	MEM_A_A<5>
MEM_A_DQ<36>	AT13	SA_DQ36	SA_MA6	AV17	MEM_A_A<6>
MEM_A_DQ<37>	AT12	SA_DQ37	SA_MA7	AU17	MEM_A_A<7>
MEM_A_DQ<38>	AL14	SA_DQ38	SA_MA8	AW17	MEM_A_A<8>
MEM_A_DQ<39>	AL12	SA_DQ39	SA_MA9	AT16	MEM_A_A<9>
MEM_A_DQ<40>	AK9	SA_DQ40	SA_MA10	AU13	MEM_A_A<10>
MEM_A_DQ<41>	AN7	SA_DQ41	SA_MA11	AT17	MEM_A_A<11>
MEM_A_DQ<42>	AK8	SA_DQ42	SA_MA12	AV20	MEM_A_A<12>
MEM_A_DQ<43>	AK7	SA_DQ43	SA_MA13	AV12	MEM_A_A<13>
MEM_A_DQ<44>	AP9	SA_DQ44			
MEM_A_DQ<45>	AN9	SA_DQ45	SA_RAS*	AW14	MEM_A_RAS_L
MEM_A_DQ<46>	AT5	SA_DQ46	SA_RCVENIN*	AK23	NC
MEM_A_DQ<47>	AL5	SA_DQ47	SA_RCVENOUT*	AK24	NC
MEM_A_DQ<48>	AY2	SA_DQ48	SA_WE*	AY14	MEM_A_WE_L
MEM_A_DQ<49>	AW2	SA_DQ49			
MEM_A_DQ<50>	AP1	SA_DQ50			
MEM_A_DQ<51>	AN2	SA_DQ51			
MEM_A_DQ<52>	AV2	SA_DQ52			
MEM_A_DQ<53>	AT3	SA_DQ53			
MEM_A_DQ<54>	AN1	SA_DQ54			
MEM_A_DQ<55>	AL2	SA_DQ55			
MEM_A_DQ<56>	AG7	SA_DQ56			
MEM_A_DQ<57>	AF9	SA_DQ57			
MEM_A_DQ<58>	AG4	SA_DQ58			
MEM_A_DQ<59>	AF6	SA_DQ59			
MEM_A_DQ<60>	AG9	SA_DQ60			
MEM_A_DQ<61>	AH6	SA_DQ61			
MEM_A_DQ<62>	AF4	SA_DQ62			
MEM_A_DQ<63>	AF8	SA_DQ63			

OMIT

U1200
945GM
NB
BGA
(5 OF 10)

DDR SYSTEM MEMORY B

MEM_B_DQ<0>	AK39	SB_DQ0	SB_BS0	AT24	MEM_B_BS<0>
MEM_B_DQ<1>	AJ37	SB_DQ1	SB_BS1	AV23	MEM_B_BS<1>
MEM_B_DQ<2>	AP39	SB_DQ2	SB_BS2	AY28	MEM_B_BS<2>
MEM_B_DQ<3>	AR41	SB_DQ3	SB_CAS*	AR24	MEM_B_CAS_L
MEM_B_DQ<4>	AJ38	SB_DQ4	SB_DM0	AK36	MEM_B_DM<0>
MEM_B_DQ<5>	AK38	SB_DQ5	SB_DM1	AR38	MEM_B_DM<1>
MEM_B_DQ<6>	AN41	SB_DQ6	SB_DM2	AT36	MEM_B_DM<2>
MEM_B_DQ<7>	AP41	SB_DQ7	SB_DM3	BA31	MEM_B_DM<3>
MEM_B_DQ<8>	AT40	SB_DQ8	SB_DM4	AL17	MEM_B_DM<4>
MEM_B_DQ<9>	AV41	SB_DQ9	SB_DM5	AH8	MEM_B_DM<5>
MEM_B_DQ<10>	AU38	SB_DQ10	SB_DM6	BA5	MEM_B_DM<6>
MEM_B_DQ<11>	AV38	SB_DQ11	SB_DM7	AN4	MEM_B_DM<7>
MEM_B_DQ<12>	AP38	SB_DQ12			
MEM_B_DQ<13>	AR40	SB_DQ13	SB_DQS0	AM39	MEM_B_DQS_P<0>
MEM_B_DQ<14>	AW38	SB_DQ14	SB_DQS1	AT39	MEM_B_DQS_P<1>
MEM_B_DQ<15>	AY38	SB_DQ15	SB_DQS2	AU35	MEM_B_DQS_P<2>
MEM_B_DQ<16>	BA38	SB_DQ16	SB_DQS3	AR29	MEM_B_DQS_P<3>
MEM_B_DQ<17>	AV36	SB_DQ17	SB_DQS4	AR16	MEM_B_DQS_P<4>
MEM_B_DQ<18>	AR36	SB_DQ18	SB_DQS5	AR10	MEM_B_DQS_P<5>
MEM_B_DQ<19>	AP36	SB_DQ19	SB_DQS6	AR7	MEM_B_DQS_P<6>
MEM_B_DQ<20>	BA36	SB_DQ20	SB_DQS7	AN5	MEM_B_DQS_P<7>
MEM_B_DQ<21>	AU36	SB_DQ21	SB_DQS0*	AM40	MEM_B_DQS_N<0>
MEM_B_DQ<22>	AP35	SB_DQ22	SB_DQS1*	AU39	MEM_B_DQS_N<1>
MEM_B_DQ<23>	AP34	SB_DQ23	SB_DQS2*	AT35	MEM_B_DQS_N<2>
MEM_B_DQ<24>	AY33	SB_DQ24	SB_DQS3*	AP29	MEM_B_DQS_N<3>
MEM_B_DQ<25>	BA33	SB_DQ25	SB_DQS4*	AP16	MEM_B_DQS_N<4>
MEM_B_DQ<26>	AT31	SB_DQ26	SB_DQS5*	AT10	MEM_B_DQS_N<5>
MEM_B_DQ<27>	AU29	SB_DQ27	SB_DQS6*	AT7	MEM_B_DQS_N<6>
MEM_B_DQ<28>	AU31	SB_DQ28	SB_DQS7*	AP5	MEM_B_DQS_N<7>
MEM_B_DQ<29>	AW31	SB_DQ29			
MEM_B_DQ<30>	AV29	SB_DQ30	SB_MA0	AY23	MEM_B_A<0>
MEM_B_DQ<31>	AW29	SB_DQ31	SB_MA1	AW24	MEM_B_A<1>
MEM_B_DQ<32>	AM19	SB_DQ32	SB_MA2	AY24	MEM_B_A<2>
MEM_B_DQ<33>	AL19	SB_DQ33	SB_MA3	AR28	MEM_B_A<3>
MEM_B_DQ<34>	AP14	SB_DQ34	SB_MA4	AT27	MEM_B_A<4>
MEM_B_DQ<35>	AN14	SB_DQ35	SB_MA5	AT28	MEM_B_A<5>
MEM_B_DQ<36>	AN17	SB_DQ36	SB_MA6	AU27	MEM_B_A<6>
MEM_B_DQ<37>	AM16	SB_DQ37	SB_MA7	AV28	MEM_B_A<7>
MEM_B_DQ<38>	AP15	SB_DQ38	SB_MA8	AV27	MEM_B_A<8>
MEM_B_DQ<39>	AL15	SB_DQ39	SB_MA9	AW27	MEM_B_A<9>
MEM_B_DQ<40>	AJ11	SB_DQ40	SB_MA10	AV24	MEM_B_A<10>
MEM_B_DQ<41>	AH10	SB_DQ41	SB_MA11	BA27	MEM_B_A<11>
MEM_B_DQ<42>	AJ9	SB_DQ42	SB_MA12	AY27	MEM_B_A<12>
MEM_B_DQ<43>	AN10	SB_DQ43	SB_MA13	AR23	MEM_B_A<13>
MEM_B_DQ<44>	AK13	SB_DQ44			
MEM_B_DQ<45>	AH11	SB_DQ45	SB_RAS*	AU23	MEM_B_RAS_L
MEM_B_DQ<46>	AK10	SB_DQ46	SB_RCVENIN*	AK16	NC
MEM_B_DQ<47>	AJ8	SB_DQ47	SB_RCVENOUT*	AK18	NC
MEM_B_DQ<48>	BA10	SB_DQ48	SB_WE*	AR27	MEM_B_WE_L
MEM_B_DQ<49>	AW10	SB_DQ49			
MEM_B_DQ<50>	BA4	SB_DQ50			
MEM_B_DQ<51>	AW4	SB_DQ51			
MEM_B_DQ<52>	AY10	SB_DQ52			
MEM_B_DQ<53>	AY9	SB_DQ53			
MEM_B_DQ<54>	AW5	SB_DQ54			
MEM_B_DQ<55>	AY5	SB_DQ55			
MEM_B_DQ<56>	AV4	SB_DQ56			
MEM_B_DQ<57>	AR5	SB_DQ57			
MEM_B_DQ<58>	AK4	SB_DQ58			
MEM_B_DQ<59>	AK3	SB_DQ59			
MEM_B_DQ<60>	AT4	SB_DQ60			
MEM_B_DQ<61>	AK5	SB_DQ61			
MEM_B_DQ<62>	AJ5	SB_DQ62			
MEM_B_DQ<63>	AJ3	SB_DQ63			

NB DDR2 Interfaces

SYNC_MASTER=(MASTER) SYNC_DATE=(MASTER)

NOTICE OF PROPRIETARY PROPERTY

THE INFORMATION CONTAINED HEREIN IS THE PROPRIETARY PROPERTY OF APPLE COMPUTER, INC. THE POSSESSOR AGREES TO THE FOLLOWING

I TO MAINTAIN THE DOCUMENT IN CONFIDENCE

II NOT TO REPRODUCE OR COPY IT

III NOT TO REVEAL OR PUBLISH IN WHOLE OR PART

APPLE COMPUTER INC.

SIZE	DRAWING NUMBER	REV.
D	051-7148	13
SCALE NONE	SHT 15 OF 110	

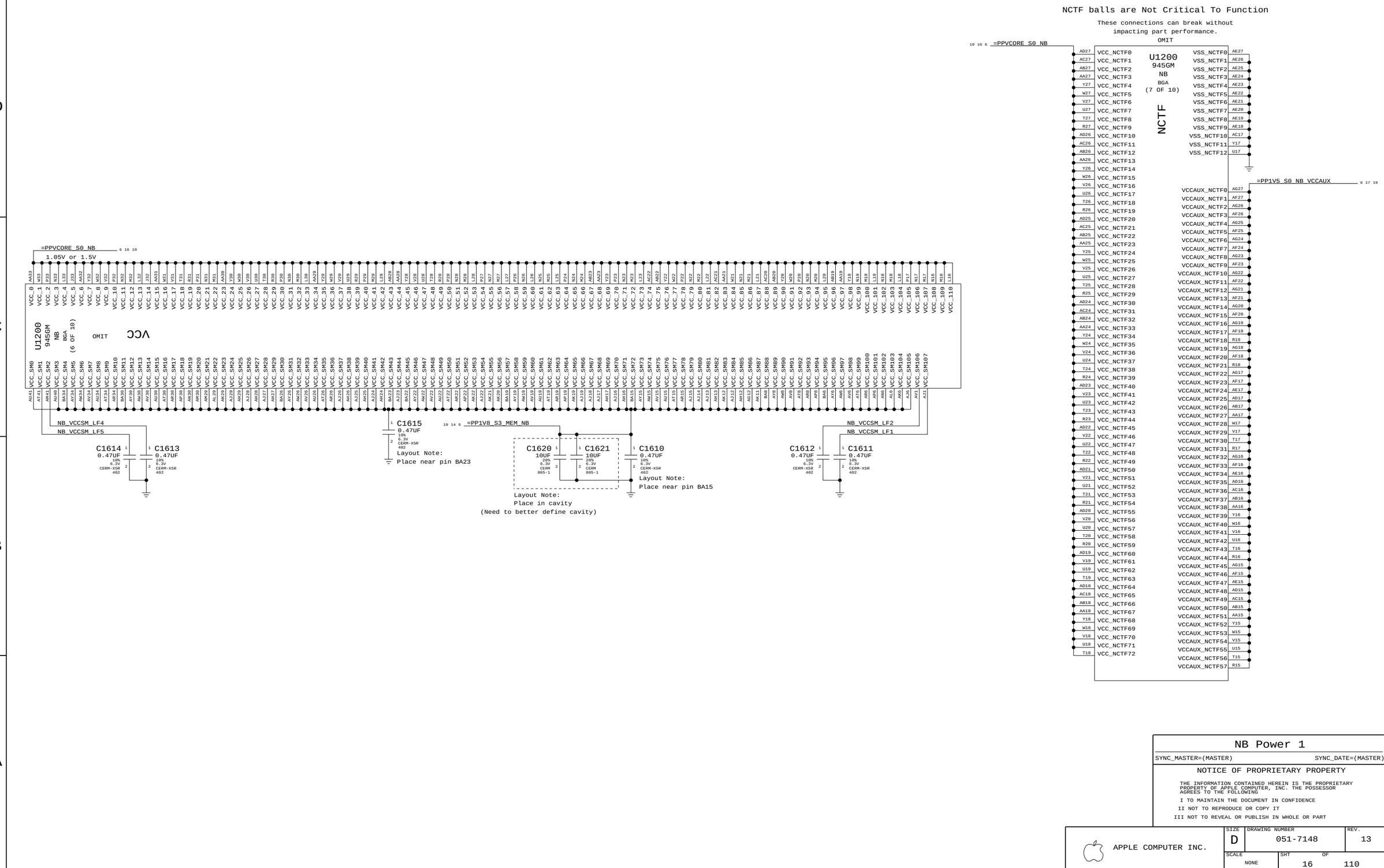

NB Power 1

SYNC_MASTER=(MASTER) SYNC_DATE=(MASTER)

NOTICE OF PROPRIETARY PROPERTY

THE INFORMATION CONTAINED HEREIN IS THE PROPRIETARY PROPERTY OF APPLE COMPUTER, INC. THE POSSESSOR AGREES TO THE FOLLOWING

I TO MAINTAIN THE DOCUMENT IN CONFIDENCE

II NOT TO REPRODUCE OR COPY IT

III NOT TO REVEAL OR PUBLISH IN WHOLE OR PART

APPLE COMPUTER INC.

SIZE	DRAWING NUMBER	REV.
D	051-7148	13

SCALE NONE SHT 16 OF 110

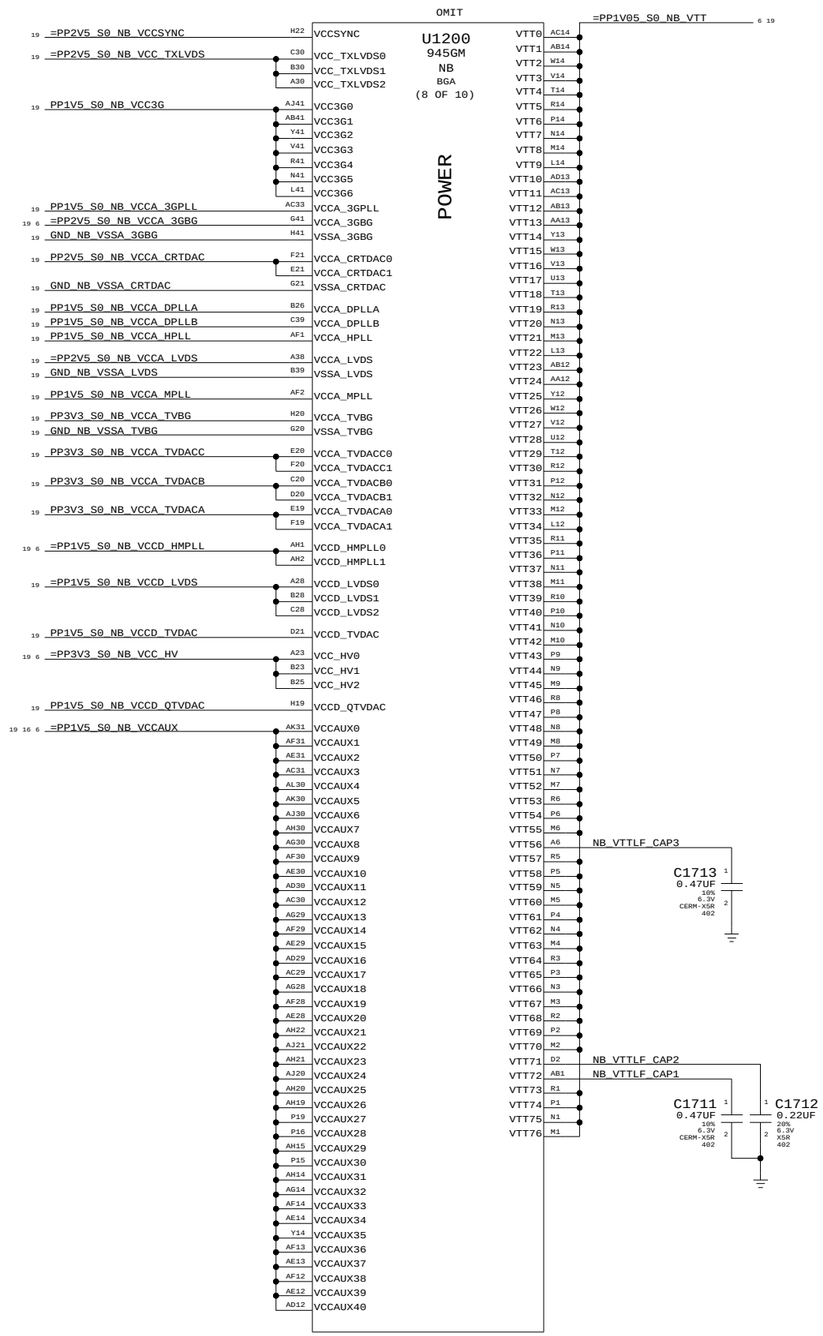

NB Power 2

SYNC_MASTER=(MASTER) SYNC_DATE=(MASTER)

NOTICE OF PROPRIETARY PROPERTY

THE INFORMATION CONTAINED HEREIN IS THE PROPRIETARY PROPERTY OF APPLE COMPUTER, INC. THE POSSESSOR AGREES TO THE FOLLOWING

I TO MAINTAIN THE DOCUMENT IN CONFIDENCE

II NOT TO REPRODUCE OR COPY IT

III NOT TO REVEAL OR PUBLISH IN WHOLE OR PART

APPLE COMPUTER INC.

SIZE	DRAWING NUMBER	REV.
D	051-7148	13

SCALE NONE SHT 17 OF 110

OMIT

U1200
945GM
NB
BGA
(9 OF 10)

VSS

AC41	VSS_0	VSS_97	AK34
AA41	VSS_1	VSS_98	AG34
W41	VSS_2	VSS_99	AF34
T41	VSS_3	VSS_100	AE34
P41	VSS_4	VSS_101	AC34
M41	VSS_5	VSS_102	C34
J41	VSS_6	VSS_103	AW33
F41	VSS_7	VSS_104	AV33
AV40	VSS_8	VSS_105	AR33
AP40	VSS_9	VSS_106	AE33
AN40	VSS_10	VSS_107	AB33
AK40	VSS_11	VSS_108	Y33
AJ40	VSS_12	VSS_109	V33
AH40	VSS_13	VSS_110	T33
AG40	VSS_14	VSS_111	R33
AF40	VSS_15	VSS_112	M33
AE40	VSS_16	VSS_113	H33
B40	VSS_17	VSS_114	G33
AY39	VSS_18	VSS_115	F33
AW39	VSS_19	VSS_116	D33
AV39	VSS_20	VSS_117	B33
AR39	VSS_21	VSS_118	AH32
AN39	VSS_22	VSS_119	AG32
AJ39	VSS_23	VSS_120	AF32
AC39	VSS_24	VSS_121	AE32
AB39	VSS_25	VSS_122	AC32
AA39	VSS_26	VSS_123	AB32
Y39	VSS_27	VSS_124	G32
W39	VSS_28	VSS_125	B32
V39	VSS_29	VSS_126	AY31
T39	VSS_30	VSS_127	AV31
R39	VSS_31	VSS_128	AN31
P39	VSS_32	VSS_129	AJ31
N39	VSS_33	VSS_130	AG31
M39	VSS_34	VSS_131	AB31
L39	VSS_35	VSS_132	Y31
J39	VSS_36	VSS_133	AB30
H39	VSS_37	VSS_134	E30
G39	VSS_38	VSS_135	AT29
F39	VSS_39	VSS_136	AN29
D39	VSS_40	VSS_137	AB29
AT38	VSS_41	VSS_138	T29
AM38	VSS_42	VSS_139	N29
AH38	VSS_43	VSS_140	K29
AG38	VSS_44	VSS_141	G29
AF38	VSS_45	VSS_142	E29
AE38	VSS_46	VSS_143	C29
C38	VSS_47	VSS_144	B29
AK37	VSS_48	VSS_145	A29
AH37	VSS_49	VSS_146	BA28
AB37	VSS_50	VSS_147	AW28
AA37	VSS_51	VSS_148	AU28
Y37	VSS_52	VSS_149	AP28
W37	VSS_53	VSS_150	AM28
V37	VSS_54	VSS_151	AD28
T37	VSS_55	VSS_152	AC28
R37	VSS_56	VSS_153	W28
P37	VSS_57	VSS_154	J28
N37	VSS_58	VSS_155	E28
M37	VSS_59	VSS_156	AP27
L37	VSS_60	VSS_157	AM27
J37	VSS_61	VSS_158	AK27
H37	VSS_62	VSS_159	J27
G37	VSS_63	VSS_160	G27
F37	VSS_64	VSS_161	F27
D37	VSS_65	VSS_162	C27
AY36	VSS_66	VSS_163	B27
AW36	VSS_67	VSS_164	AN26
AN36	VSS_68	VSS_165	M26
AH36	VSS_69	VSS_166	K26
AG36	VSS_70	VSS_167	F26
AF36	VSS_71	VSS_168	D26
AE36	VSS_72	VSS_169	AK25
AC36	VSS_73	VSS_170	P25
C36	VSS_74	VSS_171	K25
B36	VSS_75	VSS_172	H25
BA35	VSS_76	VSS_173	E25
AV35	VSS_77	VSS_174	D25
AR35	VSS_78	VSS_175	A25
AH35	VSS_79	VSS_176	BA24
AB35	VSS_80	VSS_177	AU24
AA35	VSS_81	VSS_178	AL24
Y35	VSS_82	VSS_179	AW23
W35	VSS_83		
V35	VSS_84		
T35	VSS_85		
R35	VSS_86		
P35	VSS_87		
N35	VSS_88		
M35	VSS_89		
L35	VSS_90		
J35	VSS_91		
H35	VSS_92		
G35	VSS_93		
F35	VSS_94		
D35	VSS_95		
AN34	VSS_96		

OMIT

U1200
945GM
NB
BGA
(10 OF 10)

VSS

AT23	VSS_180	VSS_273	J11
AN23	VSS_181	VSS_274	D11
AM23	VSS_182	VSS_275	B11
AH23	VSS_183	VSS_276	AV10
AC23	VSS_184	VSS_277	AP10
W23	VSS_185	VSS_278	AL10
K23	VSS_186	VSS_279	AJ10
J23	VSS_187	VSS_280	AG10
F23	VSS_188	VSS_281	AC10
C23	VSS_189	VSS_282	W10
AA22	VSS_190	VSS_283	U10
K22	VSS_191	VSS_284	BA9
G22	VSS_192	VSS_285	AW9
F22	VSS_193	VSS_286	AR9
E22	VSS_194	VSS_287	AH9
D22	VSS_195	VSS_288	AB9
A22	VSS_196	VSS_289	Y9
BA21	VSS_197	VSS_290	R9
AV21	VSS_198	VSS_291	G9
AR21	VSS_199	VSS_292	E9
AN21	VSS_200	VSS_293	A9
AL21	VSS_201	VSS_294	AG8
AB21	VSS_202	VSS_295	AD8
Y21	VSS_203	VSS_296	AA8
P21	VSS_204	VSS_297	U8
K21	VSS_205	VSS_298	K8
J21	VSS_206	VSS_299	C8
H21	VSS_207	VSS_300	BA7
C21	VSS_208	VSS_301	AV7
AW20	VSS_209	VSS_302	AP7
AR20	VSS_210	VSS_303	AL7
AM20	VSS_211	VSS_304	AJ7
AA20	VSS_212	VSS_305	AH7
K20	VSS_213	VSS_306	AF7
B20	VSS_214	VSS_307	AC7
A20	VSS_215	VSS_308	R7
AN19	VSS_216	VSS_309	G7
AC19	VSS_217	VSS_310	D7
W19	VSS_218	VSS_311	AG6
K19	VSS_219	VSS_312	AD6
G19	VSS_220	VSS_313	AB6
C19	VSS_221	VSS_314	Y6
AH18	VSS_222	VSS_315	U6
P18	VSS_223	VSS_316	N6
H18	VSS_224	VSS_317	K6
D18	VSS_225	VSS_318	H6
A18	VSS_226	VSS_319	B6
AY17	VSS_227	VSS_320	AV5
AR17	VSS_228	VSS_321	AF5
AP17	VSS_229	VSS_322	AD5
AM17	VSS_230	VSS_323	AY4
AK17	VSS_231	VSS_324	AR4
AV16	VSS_232	VSS_325	AP4
AN16	VSS_233	VSS_326	AL4
AL16	VSS_234	VSS_327	AJ4
J16	VSS_235	VSS_328	Y4
F16	VSS_236	VSS_329	U4
C16	VSS_237	VSS_330	R4
AN15	VSS_238	VSS_331	J4
AM15	VSS_239	VSS_332	F4
AK15	VSS_240	VSS_333	C4
N15	VSS_241	VSS_334	AY3
M15	VSS_242	VSS_335	AW3
L15	VSS_243	VSS_336	AV3
B15	VSS_244	VSS_337	AL3
A15	VSS_245	VSS_338	AH3
BA14	VSS_246	VSS_339	AG3
AT14	VSS_247	VSS_340	AF3
AK14	VSS_248	VSS_341	AD3
AD14	VSS_249	VSS_342	AC3
AA14	VSS_250	VSS_343	AA3
U14	VSS_251	VSS_344	G3
K14	VSS_252	VSS_345	AT2
H14	VSS_253	VSS_346	AR2
E14	VSS_254	VSS_347	AP2
AV13	VSS_255	VSS_348	AK2
AR13	VSS_256	VSS_349	AJ2
AN13	VSS_257	VSS_350	AD2
AM13	VSS_258	VSS_351	AB2
AL13	VSS_259	VSS_352	Y2
AG13	VSS_260	VSS_353	U2
P13	VSS_261	VSS_354	T2
F13	VSS_262	VSS_355	N2
D13	VSS_263	VSS_356	J2
B13	VSS_264	VSS_357	H2
AY12	VSS_265	VSS_358	F2
AC12	VSS_266	VSS_359	C2
K12	VSS_267	VSS_360	AL1
H12	VSS_268		
E12	VSS_269		
AD11	VSS_270		
AA11	VSS_271		
Y11	VSS_272		

NB Grounds

SYNC_MASTER=(MASTER) SYNC_DATE=(MASTER)

NOTICE OF PROPRIETARY PROPERTY

THE INFORMATION CONTAINED HEREIN IS THE PROPRIETARY PROPERTY OF APPLE COMPUTER, INC. THE POSSESSOR AGREES TO THE FOLLOWING

I TO MAINTAIN THE DOCUMENT IN CONFIDENCE

II NOT TO REPRODUCE OR COPY IT

III NOT TO REVEAL OR PUBLISH IN WHOLE OR PART

APPLE COMPUTER INC.

SIZE	DRAWING NUMBER	REV.
D	051-7148	13

SCALE	SHT	OF
NONE	18	110

Power Interface

These are the power signals that leave the NB "block"

IN	=PP1V05_S0_FSB_NB	5 6 12
IN	=PPVCORE_S0_NB	6 16 19
IN	=PP1V05_S0_NB	6
IN	=PP1V05_S0_NB_VTT	6 17 19
IN	=PP1V5_S0_NB	6 19
IN	=PP1V5_S0_NB_PCIE	6 13
IN	=PP1V5_S0_NB_PLL	6 19
IN	=PP1V5_S0_NB_TVDAC	6 19
IN	=PP1V5_S0_NB_VCCD_HMPLL	6 17
IN	=PP1V5_S0_NB_VCCD_LVDS	17 19
IN	=PP1V5_S0_NB_VCCAUX	6 16 17 19
IN	=PP1V8_S3_MEM_NB	6 14 16 19
IN	=PP2V5_S0_NB_VCCSYNC	17 19
IN	=PP2V5_S0_NB_VCC_TXLVDS	17 19
IN	=PP2V5_S0_NB_VCCA_3GBG	6 17 19
IN	=PP2V5_S0_NB_VCCA_LVDS	17 19
IN	=PP3V3_S0_NB	6 14 20
IN	=PP3V3_S0_NB_TVDAC	6
IN	=PP3V3_S0_NB_VCC_HV	6 17 19

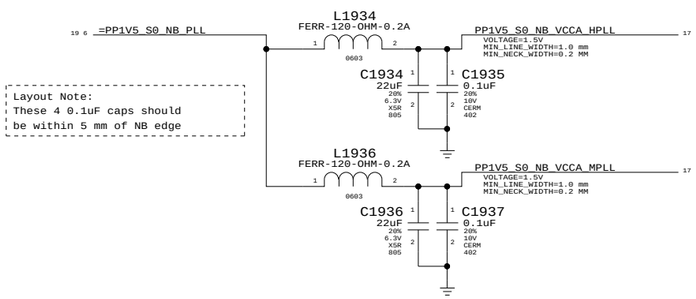

Layout Note:
These 4 0.1uF caps should
be within 5 mm of NB edge

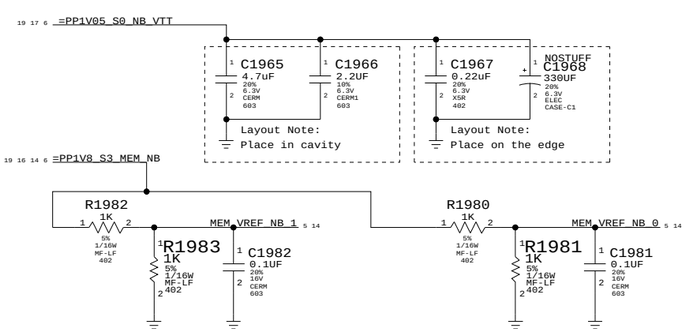

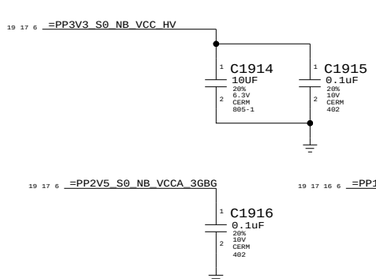

TVOUT DISABLE

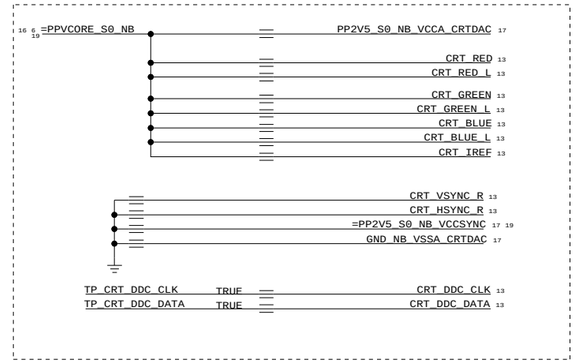

DISPLAY DISABLE

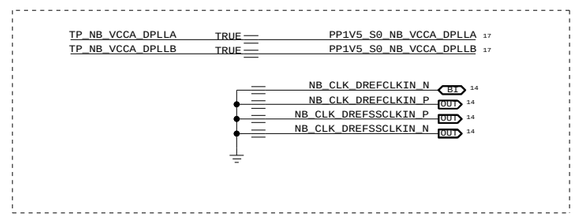

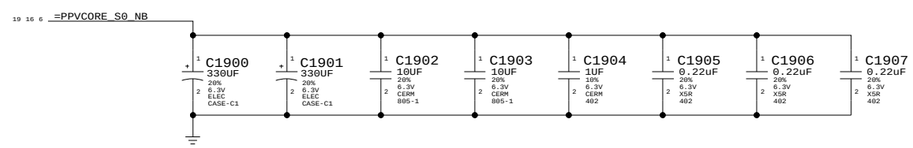

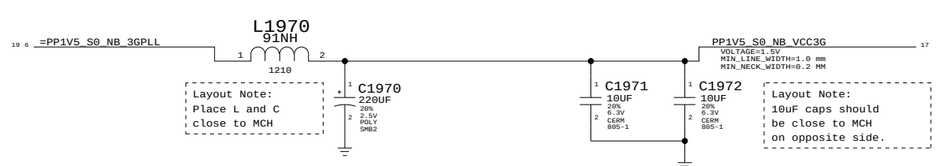

Layout Note:
Place L and C
close to MCH

Layout Note:
10uF caps should
be close to MCH
on opposite side.

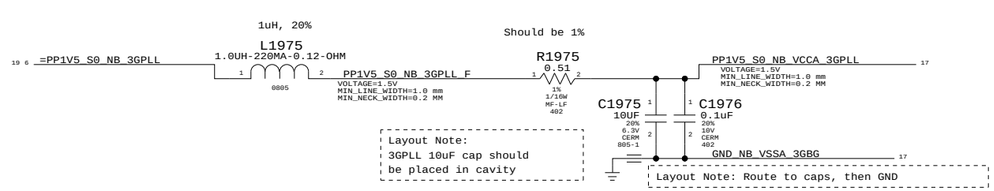

Layout Note:
3GPLL 10uF cap should
be placed in cavity

Layout Note: Route to caps, then GND

LVDS DISABLE

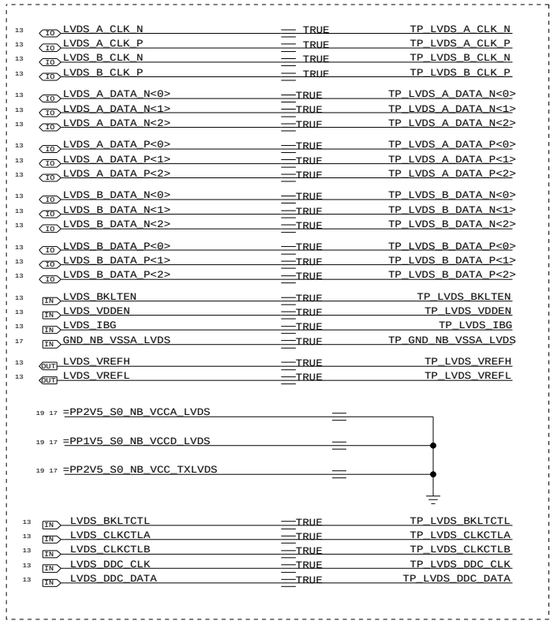

TVOUT DISABLE

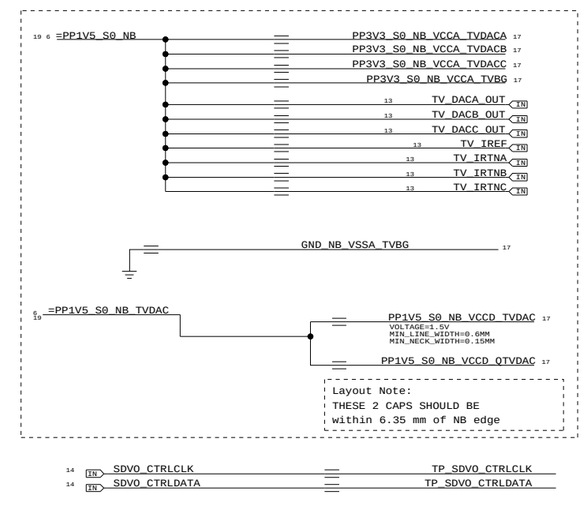

Layout Note:
THESE 2 CAPS SHOULD BE
within 6.35 mm of NB edge

NB (GM) Decoupling

SYNC_MASTER=(MASTER) SYNC_DATE=(MASTER)

NOTICE OF PROPRIETARY PROPERTY

THE INFORMATION CONTAINED HEREIN IS THE PROPRIETARY PROPERTY OF APPLE COMPUTER, INC. THE POSSESSOR AGREES TO THE FOLLOWING

I TO MAINTAIN THE DOCUMENT IN CONFIDENCE

II NOT TO REPRODUCE OR COPY IT

III NOT TO REVEAL OR PUBLISH IN WHOLE OR PART

APPLE COMPUTER INC.

SIZE	DRAWING NUMBER	REV.
D	051-7148	13
SCALE NONE	SHT 19 OF 110	

NB_CFG<3>	RESERVED

NB_CFG<4>	RESERVED

14 NB_CFG<5>
Internal pull-up

NB_CFG<5> DMI x2 Select	High = DMIx4 Low = DMIx2

NBCFG_DMI_X2
R2075
2.2K
5%
1/16W
MF-LF
402

PROBABLY NOT NEEDED

NB_CFG<6>	RESERVED

14 NB_CFG<7>
Internal pull-up

NB_CFG<7> CPU Strap	High = Mobile CPU Low = RESERVED

NO STUFF
R2077
2.2K
5%
1/16W
MF-LF
402

NB_CFG<8>	RESERVED

14 NB_CFG<9>
Internal pull-up

NB_CFG<9> PCIE Graphics Lane Reversal	High = Normal Low = Reversed

NBCFG_PEG_REVERSE
R2079
2.2K
5%
1/16W
MF-LF
402

NB_CFG<10>	RESERVED

NB_CFG<11>	RESERVED

Internal pull-ups

NB_CFG<13:12>	00 = Partial Clock Gating Disable 01 = XOR Mode Enabled 10 = All-Z Mode Enabled 11 = Normal Operation

NB_CFG<14>	RESERVED

NB_CFG<15>	RESERVED

14 NB_CFG<16>
Internal pull-up

NB_CFG<16> FSB Dynamic ODT	High = Enabled Low = Disabled

NBCFG_DYN_ODT_DISABLE
R2085
2.2K
5%
1/16W
MF-LF
402

NB_CFG<17>	RESERVED

=PP3V3_S0_NB 6 14 19 20
NBCFG_VCC_1V5

NB_CFG<18> VCC Select	High = 1.5V Low = 1.05V

R2058
2.2K
5%
1/16W
MF-LF
402

14 NB_CFG<18>
Internal pull-down

=PP3V3_S0_NB 6 14 19 20
NBCFG_DMI_REVERSE

NB_CFG<19> DMI Lane Reversal	High = Reversed Low = Normal

R2059
2.2K
5%
1/16W
MF-LF
402

14 NB_CFG<19>
Internal pull-down

=PP3V3_S0_NB 6 14 19 20
NBCFG_SDVO_AND_PCIE

945 External Design Spec says reserved

NB_CFG<20> PCIe Backward Interop. Mode	High = Both active Low = Only SDVO or PCIe x1

R2060
2.2K
5%
1/16W
MF-LF
402

14 NB_CFG<20>
Internal pull-down

PROBABLY NOT NEEDED

NB Config Straps

SYNC_MASTER=(MASTER) SYNC_DATE=(MASTER)

NOTICE OF PROPRIETARY PROPERTY

THE INFORMATION CONTAINED HEREIN IS THE PROPRIETARY PROPERTY OF APPLE COMPUTER, INC. THE POSSESSOR AGREES TO THE FOLLOWING

I TO MAINTAIN THE DOCUMENT IN CONFIDENCE

II NOT TO REPRODUCE OR COPY IT

III NOT TO REVEAL OR PUBLISH IN WHOLE OR PART

APPLE COMPUTER INC.

SIZE	DRAWING NUMBER	REV.
D	051-7148	13

SCALE NONE SHT 20 OF 110

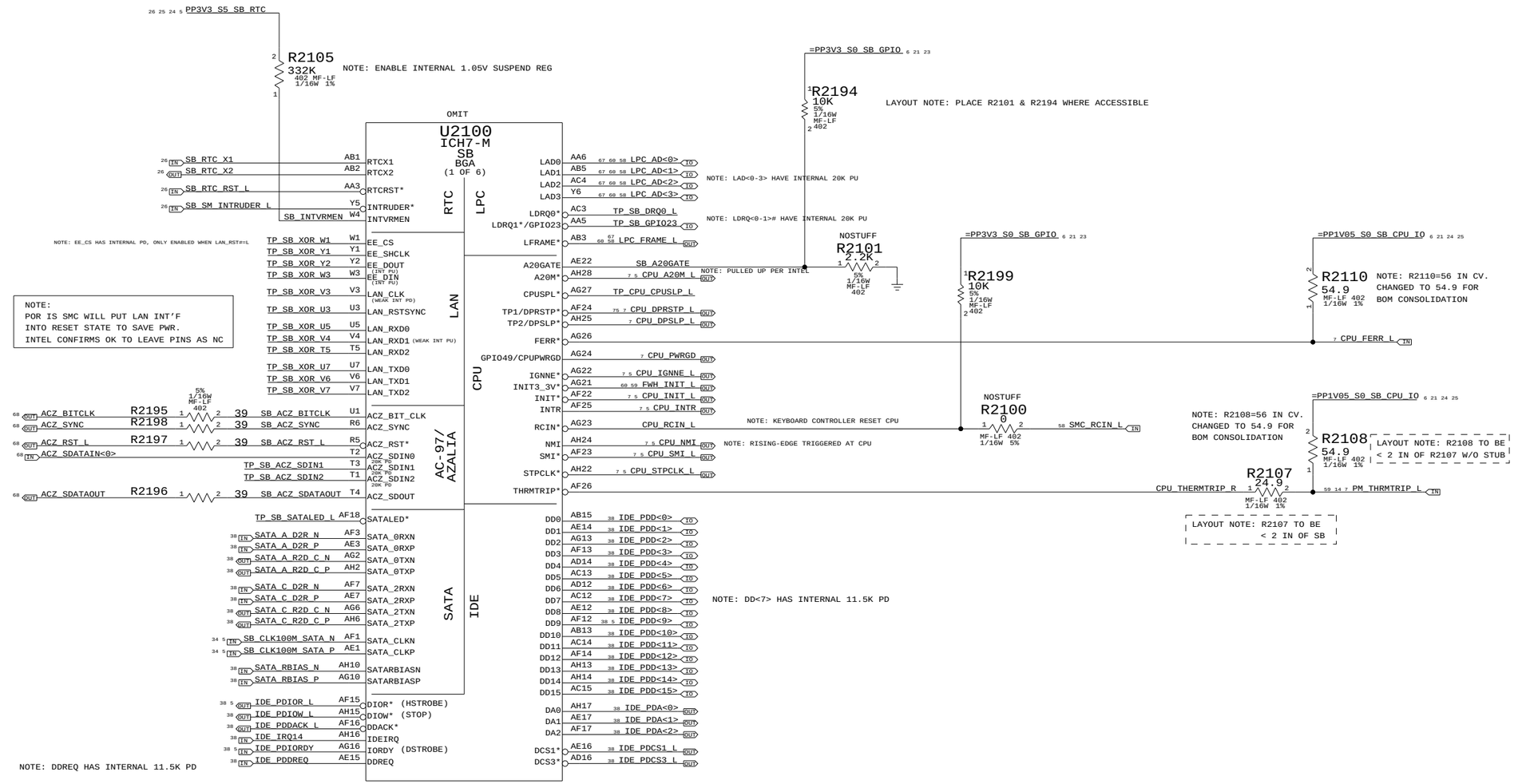

	AC '07	INTEL HIGH DEFINITION AUDIO
ACZ_BIT_CLK	INTERNAL 20K PD ENABLED WHEN - LSO BIT IN AC'97 GLOBAL CONTROL REG = 1; OR - BOTH FUNCTION 2 & 3 OF DEVICE 30 ARE DISABLED	INTERNAL 20K PD ONLY ENABLED IN S3COLD
ACZ_RST#		NONE
ACZ_SDIN[0-2]	INTERNAL 20K PD	INTERNAL 20K PD
ACZ_SDOUT	INTERNAL 20K PD ENABLED DURING RESET AND WHEN - LSO BIT IN AC'97 GLOBAL CONTROL REG = 1; OR - BOTH FUNCTION 2 & 3 OF DEVICE 30 ARE DISABLED	INTERNAL 20K PD ENABLED WHEN - LSO BIT IN AC'97 GLOBAL CONTROL REG = 1; OR - BOTH FUNCTION 2 & 3 OF DEVICE 30 ARE DISABLED
ACZ_SYNC		INTERNAL 20K PD

SB: 1 OF 4

SYNC_MASTER=N/A SYNC_DATE=N/A

NOTICE OF PROPRIETARY PROPERTY

THE INFORMATION CONTAINED HEREIN IS THE PROPRIETARY PROPERTY OF APPLE COMPUTER, INC. THE POSSESSOR AGREES TO THE FOLLOWING

I TO MAINTAIN THE DOCUMENT IN CONFIDENCE

II NOT TO REPRODUCE OR COPY IT

III NOT TO REVEAL OR PUBLISH IN WHOLE OR PART

APPLE COMPUTER INC.

SIZE	DRAWING NUMBER	REV.
D	051-7148	13
SCALE NONE	SHT 21 OF 110	

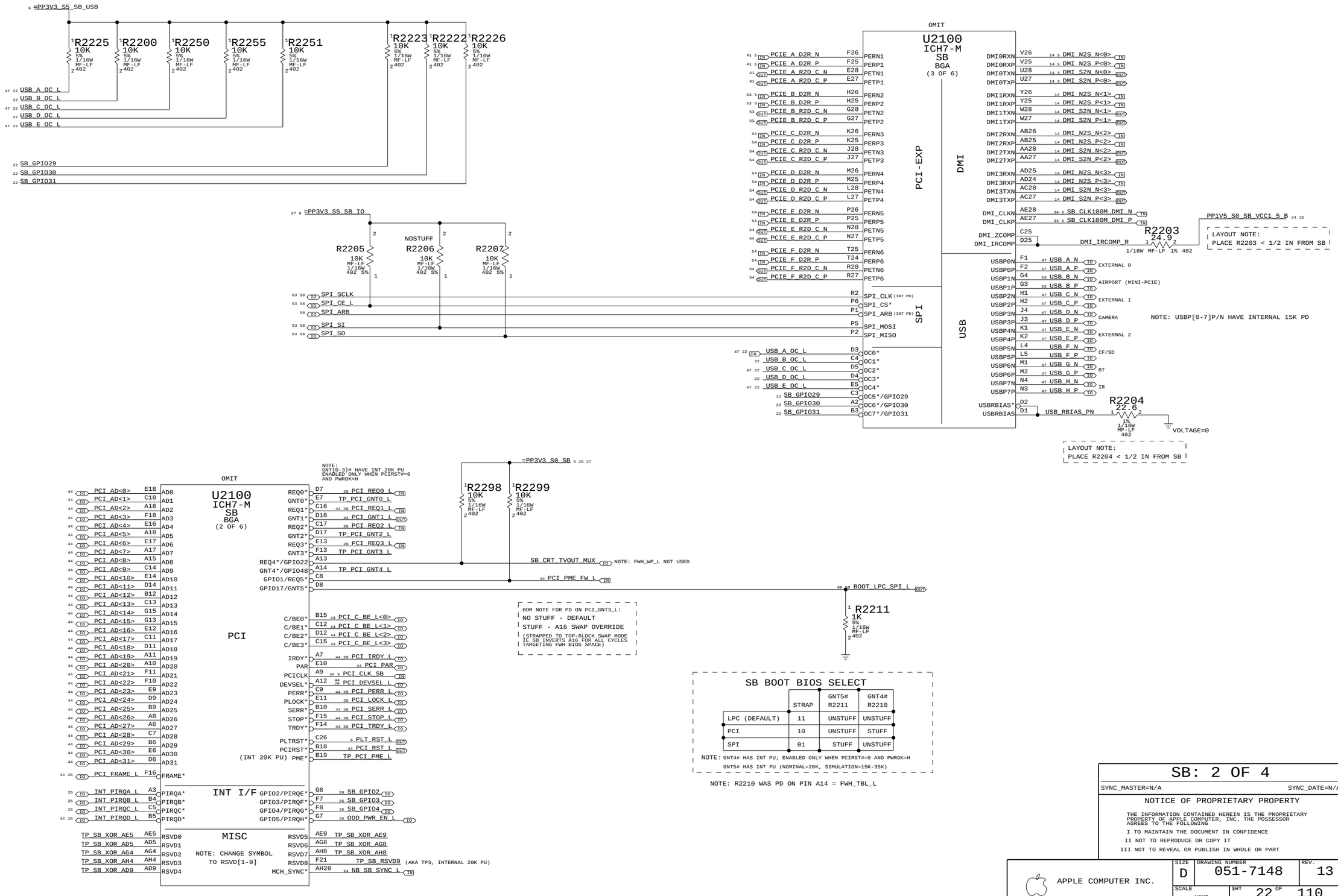
=PP3V3_S5_SB_USB
R2225 10K 5% 1/16W MF-LF 402
R2200 10K 5% 1/16W MF-LF 402
R2250 10K 5% 1/16W MF-LF 402
R2255 10K 5% 1/16W MF-LF 402
R2251 10K 5% 1/16W MF-LF 402
R2223 10K 5% 1/16W MF-LF 402
R2222 10K 5% 1/16W MF-LF 402
R2226 10K 5% 1/16W MF-LF 402
USB_A_OC_L
USB_B_OC_L
USB_C_OC_L
USB_D_OC_L
USB_E_OC_L
SB_GPIO29
SB_GPIO30
SB_GPIO31
=PP3V3_S5_SB_IO
R2205 10K MF-LF 1/16W 402 5%
NOSTUFF
R2206 10K MF-LF 1/16W 402 5%
R2207 10K MF-LF 1/16W 402 5%
SPI_SCLK
SPI_CE_L
SPI_ARB
SPI_SI
SPI_SO
OMIT
U2100
ICH7-M
SB
BGA
(3 OF 6)
PCI-EXP
DMI
SPI
USB
PCIE_A_D2R_N
PCIE_A_D2R_P
PCIE_A_R2D_C_N
PCIE_A_R2D_C_P
PCIE_B_D2R_N
PCIE_B_D2R_P
PCIE_B_R2D_C_N
PCIE_B_R2D_C_P
PCIE_C_D2R_N
PCIE_C_D2R_P
PCIE_C_R2D_C_N
PCIE_C_R2D_C_P
PCIE_D_D2R_N
PCIE_D_D2R_P
PCIE_D_R2D_C_N
PCIE_D_R2D_C_P
PCIE_E_D2R_N
PCIE_E_D2R_P
PCIE_E_R2D_C_N
PCIE_E_R2D_C_P
PCIE_F_D2R_N
PCIE_F_D2R_P
PCIE_F_R2D_C_N
PCIE_F_R2D_C_P
DMI0RXN DMI_N2S_N<0>
DMI0RXP DMI_N2S_P<0>
DMI0TXN DMI_S2N_N<0>
DMI0TXP DMI_S2N_P<0>
DMI1RXN DMI_N2S_N<1>
DMI1RXP DMI_N2S_P<1>
DMI1TXN DMI_S2N_N<1>
DMI1TXP DMI_S2N_P<1>
DMI2RXN DMI_N2S_N<2>
DMI2RXP DMI_N2S_P<2>
DMI2TXN DMI_S2N_N<2>
DMI2TXP DMI_S2N_P<2>
DMI3RXN DMI_N2S_N<3>
DMI3RXP DMI_N2S_P<3>
DMI3TXN DMI_S2N_N<3>
DMI3TXP DMI_S2N_P<3>
DMI_CLKN SB_CLK100M_DMI_N
DMI_CLKP SB_CLK100M_DMI_P
DMI_ZCOMP
DMI_IRCOMP
DMI_IRCOMP_R
R2203 24.9 1/16W MF-LF 1% 402
PP1V5_S0_SB_VCC1_5_B
LAYOUT NOTE:
PLACE R2203 < 1/2 IN FROM SB
USBP0N USB_A_N EXTERNAL 0
USBP0P USB_A_P
USBP1N USB_B_N AIRPORT (MINI-PCIE)
USBP1P USB_B_P
USBP2N USB_C_N EXTERNAL 1
USBP2P USB_C_P
USBP3N USB_D_N CAMERA
USBP3P USB_D_P
USBP4N USB_E_N EXTERNAL 2
USBP4P USB_E_P
USBP5N USB_F_N CF/SD
USBP5P USB_F_P
USBP6N USB_G_N BT
USBP6P USB_G_P
USBP7N USB_H_N IR
USBP7P USB_H_P
NOTE: USBP[0-7]P/N HAVE INTERNAL 15K PD
USBRBIAS*
USBRBIAS
USB_RBIAS_PN
R2204 22.6 1% 1/16W MF-LF 402
VOLTAGE=0
LAYOUT NOTE:
PLACE R2204 < 1/2 IN FROM SB
SPI_CLK (INT PD)
SPI_CS*
SPI_ARB (INT PD)
SPI_MOSI
SPI_MISO
OC0*
OC1*
OC2*
OC3*
OC4*
OC5*/GPIO29
OC6*/GPIO30
OC7*/GPIO31
OMIT
U2100
ICH7-M
SB
BGA
(2 OF 6)
PCI
INT I/F
MISC
NOTE: CHANGE SYMBOL TO RSVD[1-9]
PCI AD<0>
PCI AD<1>
PCI AD<2>
PCI AD<3>
PCI AD<4>
PCI AD<5>
PCI AD<6>
PCI AD<7>
PCI AD<8>
PCI AD<9>
PCI AD<10>
PCI AD<11>
PCI AD<12>
PCI AD<13>
PCI AD<14>
PCI AD<15>
PCI AD<16>
PCI AD<17>
PCI AD<18>
PCI AD<19>
PCI AD<20>
PCI AD<21>
PCI AD<22>
PCI AD<23>
PCI AD<24>
PCI AD<25>
PCI AD<26>
PCI AD<27>
PCI AD<28>
PCI AD<29>
PCI AD<30>
PCI AD<31>
PCI_FRAME_L
INT_PIRQA_L
INT_PIRQB_L
INT_PIRQC_L
INT_PIRQD_L
TP_SB_XOR_AE5
TP_SB_XOR_AD5
TP_SB_XOR_AG4
TP_SB_XOR_AH4
TP_SB_XOR_AD9
NOTE:
GNT[0-3]# HAVE INT 20K PU
ENABLED ONLY WHEN PCIRST#=0
AND PWROK=H
REQ0* PCI_REQ0_L
GNT0* TP_PCI_GNT0_L
REQ1* PCI_REQ1_L
GNT1* PCI_GNT1_L
REQ2* PCI_REQ2_L
GNT2* TP_PCI_GNT2_L
REQ3* PCI_REQ3_L
GNT3* TP_PCI_GNT3_L
REQ4*/GPIO22 SB_CRT_TVOUT_MUX
GNT4*/GPIO48 TP_PCI_GNT4_L
GPIO1/REQ5* PCI_PME_FW_L
GPIO17/GNT5* BOOT_LPC_SPI_L
=PP3V3_S0_SB
R2298 10K 5% 1/16W MF-LF 402
R2299 10K 5% 1/16W MF-LF 402
NOTE: FWH_WP_L NOT USED
C/BE0* PCI_C_BE_L<0>
C/BE1* PCI_C_BE_L<1>
C/BE2* PCI_C_BE_L<2>
C/BE3* PCI_C_BE_L<3>
IRDY* PCI_IRDY_L
PAR PCI_PAR
PCICLK PCI_CLK_SB
DEVSEL* PCI_DEVSEL_L
PERR* PCI_PERR_L
PLOCK* PCI_LOCK_L
SERR* PCI_SERR_L
STOP* PCI_STOP_L
TRDY* PCI_TRDY_L
PLTRST* PLT_RST_L
PCIRST* PCI_RST_L
(INT 20K PU) PME* TP_PCI_PME_L
GPIO2/PIRQE* SB_GPIO2
GPIO3/PIRQF* SB_GPIO3
GPIO4/PIRQG* SB_GPIO4
GPIO5/PIRQH* ODD_PWR_EN_L
RSVD5 TP_SB_XOR_AE9
RSVD6 TP_SB_XOR_AG8
RSVD7 TP_SB_XOR_AH8
RSVD8 TP_SB_RSVD9 (AKA TP3, INTERNAL 20K PU)
MCH_SYNC* NB_SB_SYNC_L
BOM NOTE FOR PD ON PCI_GNT3_L:
NO STUFF - DEFAULT
STUFF - A16 SWAP OVERRIDE
(STRAPPED TO TOP-BLOCK SWAP MODE IE SB INVERTS A16 FOR ALL CYCLES TARGETING FWH BIOS SPACE)
R2211 1K 5% 1/16W MF-LF 402
SB BOOT BIOS SELECT
STRAP
GNT5# R2211
GNT4# R2210
LPC (DEFAULT) 11 UNSTUFF UNSTUFF
PCI 10 UNSTUFF STUFF
SPI 01 STUFF UNSTUFF
NOTE: GNT4# HAS INT PU; ENABLED ONLY WHEN PCIRST#=0 AND PWROK=H
GNT5# HAS INT PU (NOMINAL=20K, SIMULATION=15K-35K)
NOTE: R2210 WAS PD ON PIN A14 = FWH_TBL_L
SB: 2 OF 4
SYNC_MASTER=N/A
SYNC_DATE=N/A
NOTICE OF PROPRIETARY PROPERTY
THE INFORMATION CONTAINED HEREIN IS THE PROPRIETARY PROPERTY OF APPLE COMPUTER, INC. THE POSSESSOR AGREES TO THE FOLLOWING
I TO MAINTAIN THE DOCUMENT IN CONFIDENCE
II NOT TO REPRODUCE OR COPY IT
III NOT TO REVEAL OR PUBLISH IN WHOLE OR PART
APPLE COMPUTER INC.
SIZE D
DRAWING NUMBER 051-7148
REV. 13
SCALE NONE
SHT 22 OF 110

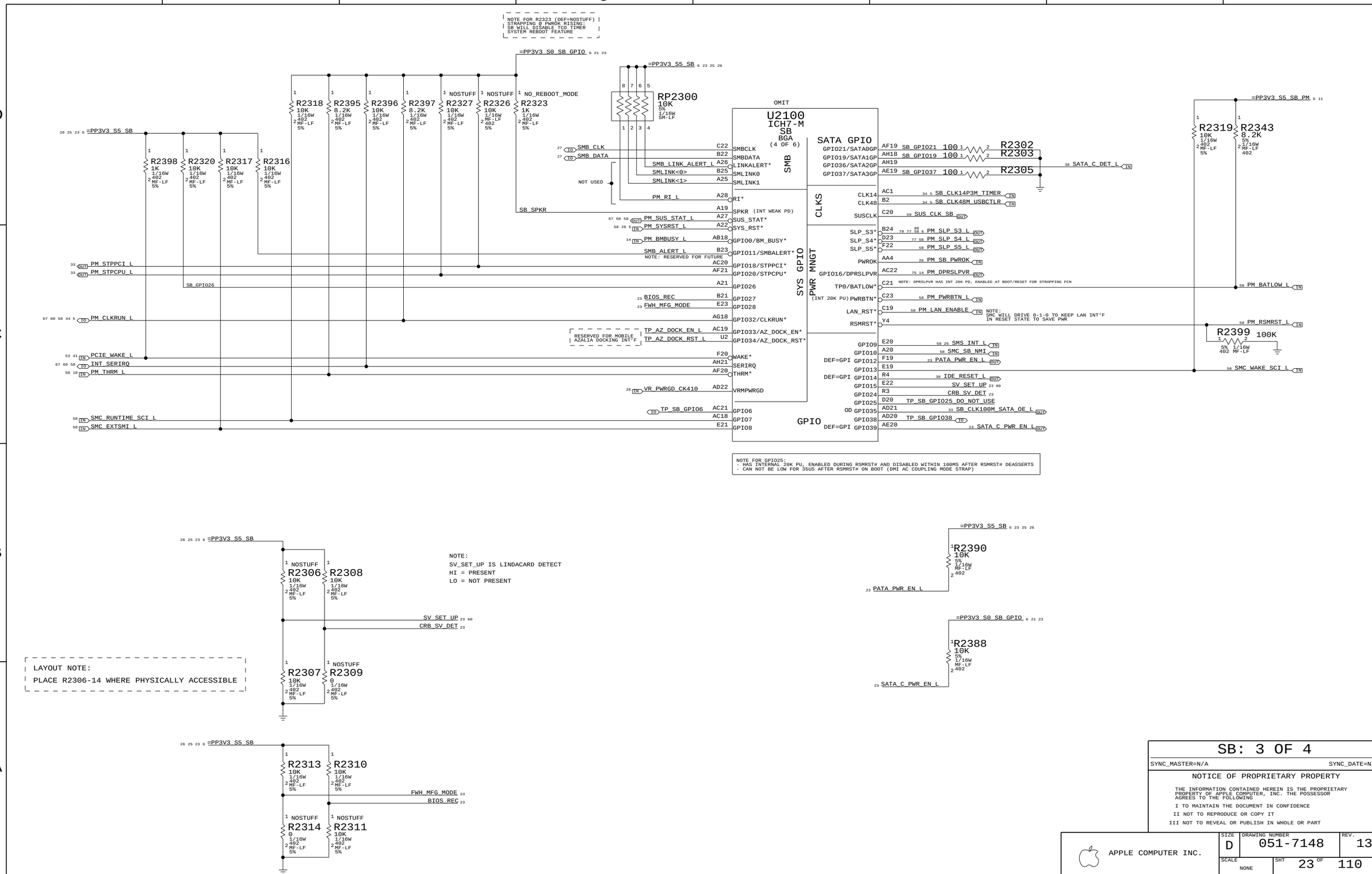

SB: 3 OF 4

SYNC_MASTER=N/A SYNC_DATE=N/A

NOTICE OF PROPRIETARY PROPERTY

THE INFORMATION CONTAINED HEREIN IS THE PROPRIETARY PROPERTY OF APPLE COMPUTER, INC. THE POSSESSOR AGREES TO THE FOLLOWING

I TO MAINTAIN THE DOCUMENT IN CONFIDENCE

II NOT TO REPRODUCE OR COPY IT

III NOT TO REVEAL OR PUBLISH IN WHOLE OR PART

APPLE COMPUTER INC.

SIZE	DRAWING NUMBER	REV.
D	051-7148	13

SCALE NONE | SHT 23 OF 110

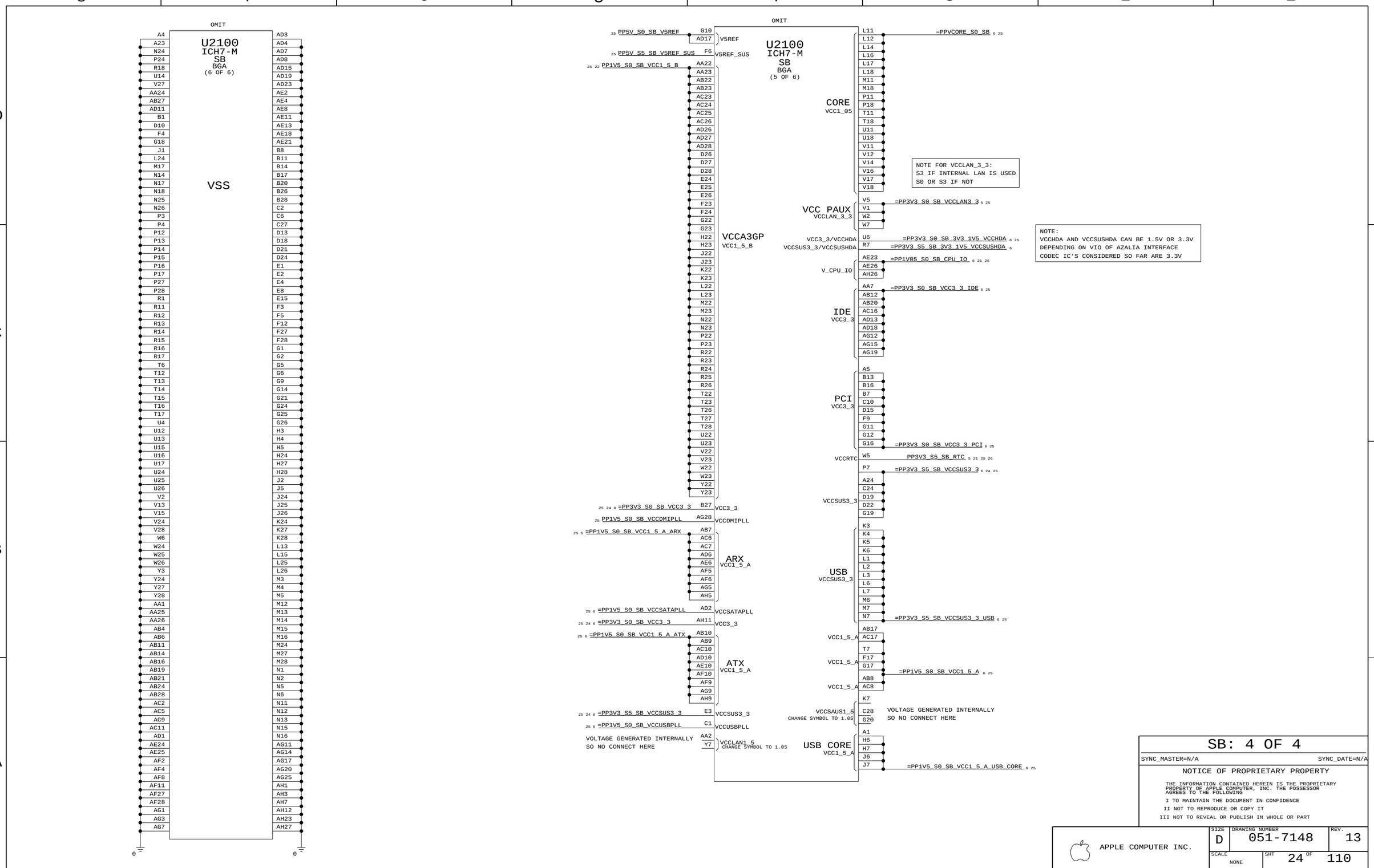

SB: 4 OF 4

SYNC_MASTER=N/A SYNC_DATE=N/A

NOTICE OF PROPRIETARY PROPERTY

THE INFORMATION CONTAINED HEREIN IS THE PROPRIETARY PROPERTY OF APPLE COMPUTER, INC. THE POSSESSOR AGREES TO THE FOLLOWING

I TO MAINTAIN THE DOCUMENT IN CONFIDENCE

II NOT TO REPRODUCE OR COPY IT

III NOT TO REVEAL OR PUBLISH IN WHOLE OR PART

APPLE COMPUTER INC.

SIZE	DRAWING NUMBER	REV.
D	051-7148	13
SCALE NONE	SHT 24 OF 110	

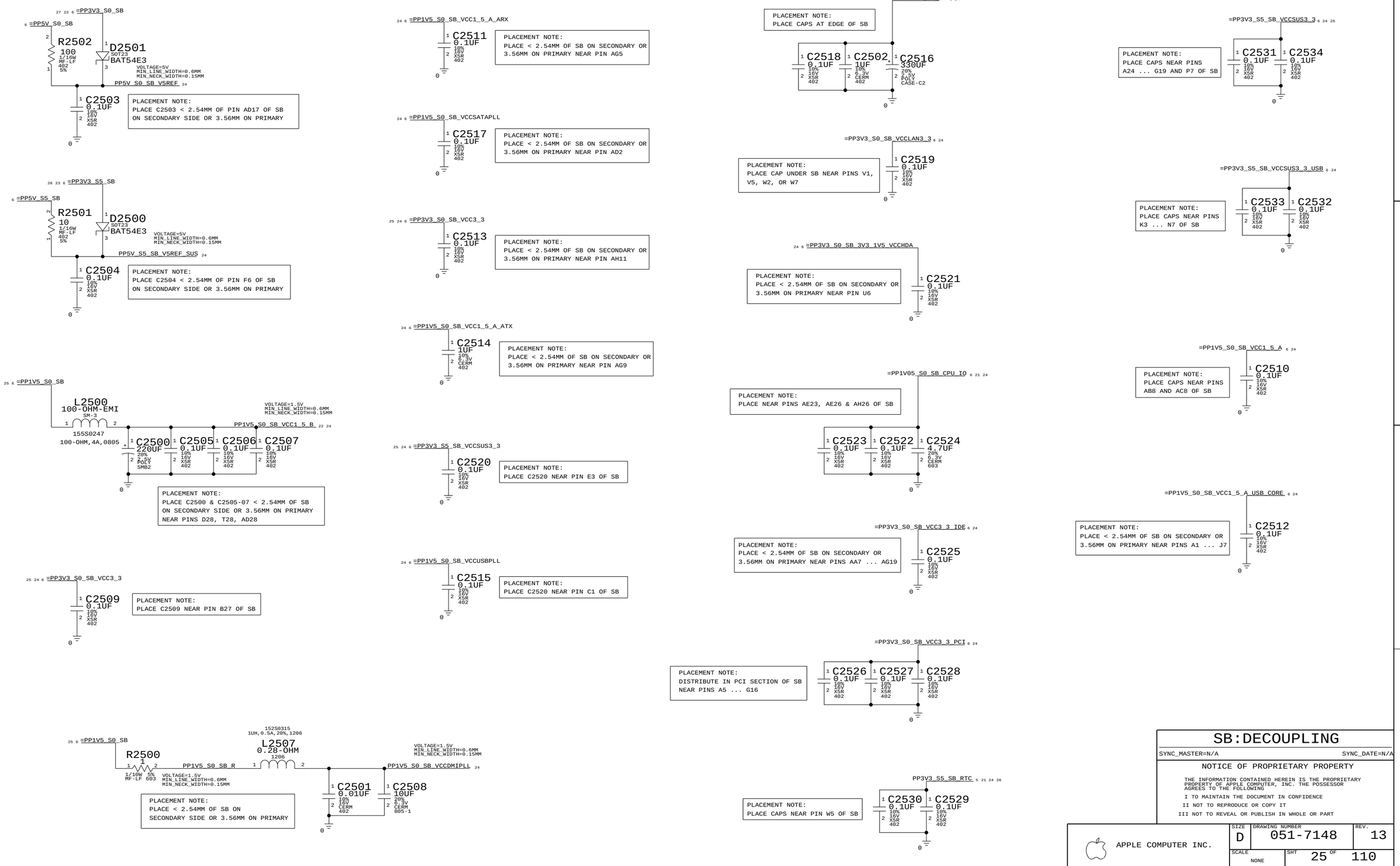

SB:DECOUPLING

SYNC_MASTER=N/A SYNC_DATE=N/A

NOTICE OF PROPRIETARY PROPERTY

THE INFORMATION CONTAINED HEREIN IS THE PROPRIETARY PROPERTY OF APPLE COMPUTER, INC. THE POSSESSOR AGREES TO THE FOLLOWING

I TO MAINTAIN THE DOCUMENT IN CONFIDENCE

II NOT TO REPRODUCE OR COPY IT

III NOT TO REVEAL OR PUBLISH IN WHOLE OR PART

APPLE COMPUTER INC.

SIZE	DRAWING NUMBER	REV.
D	051-7148	13

SCALE NONE

SHT 25 OF 110

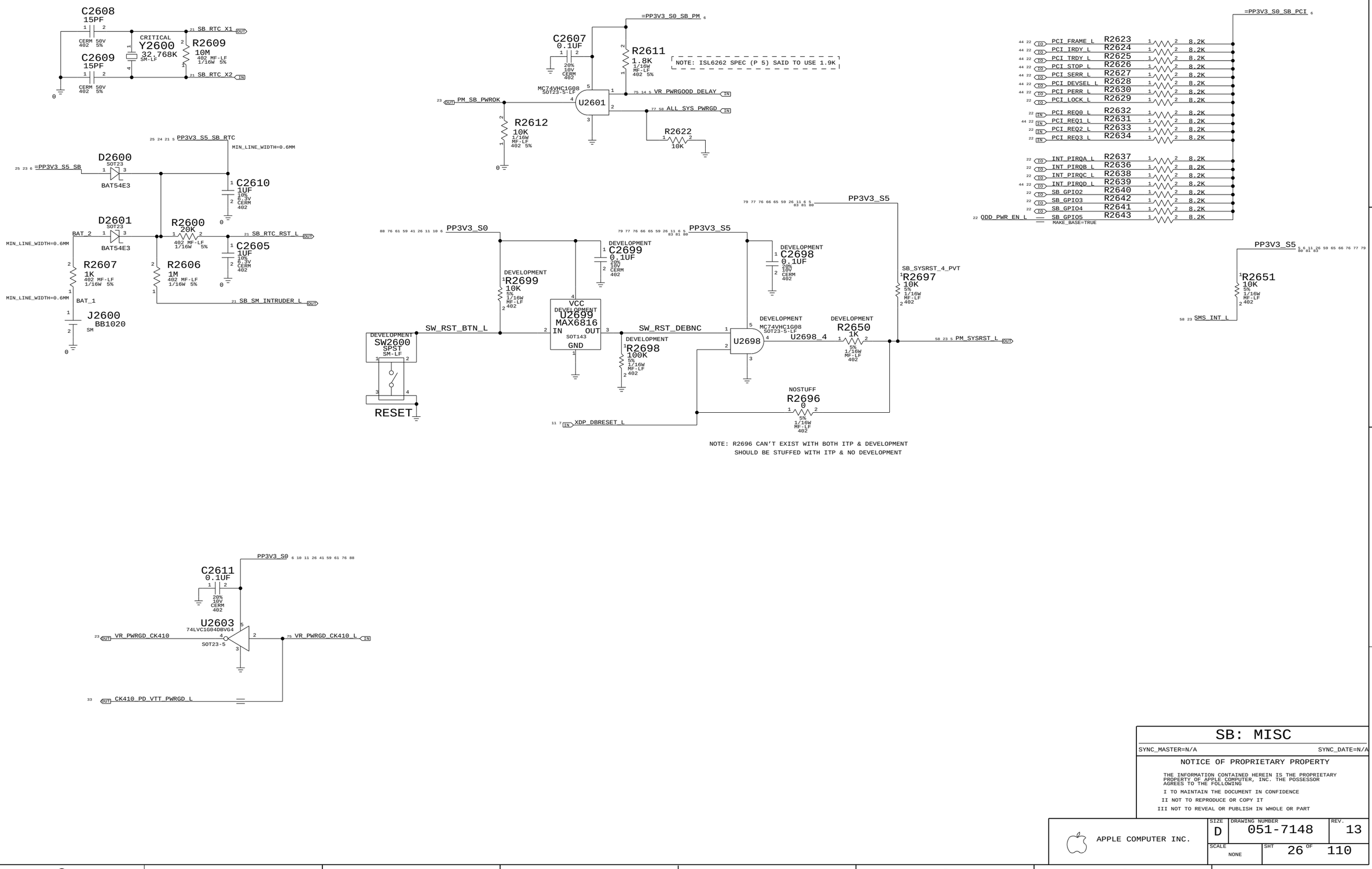

SB: MISC

SYNC_MASTER=N/A SYNC_DATE=N/A

NOTICE OF PROPRIETARY PROPERTY

THE INFORMATION CONTAINED HEREIN IS THE PROPRIETARY PROPERTY OF APPLE COMPUTER, INC. THE POSSESSOR AGREES TO THE FOLLOWING

I TO MAINTAIN THE DOCUMENT IN CONFIDENCE

II NOT TO REPRODUCE OR COPY IT

III NOT TO REVEAL OR PUBLISH IN WHOLE OR PART

APPLE COMPUTER INC.

SIZE	DRAWING NUMBER	REV.
D	051-7148	13
SCALE NONE	SHT 26 OF 110	

SB I2C BUSSES

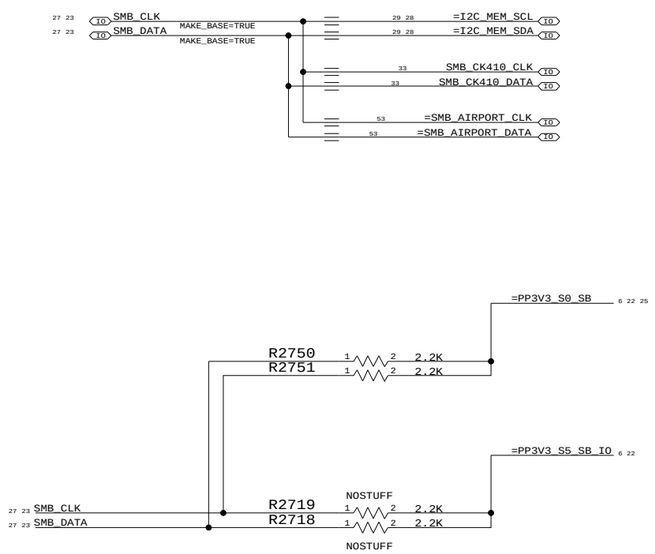

SB: SMB HUB

SYNC_MASTER=N/A SYNC_DATE=N/A

NOTICE OF PROPRIETARY PROPERTY

THE INFORMATION CONTAINED HEREIN IS THE PROPRIETARY PROPERTY OF APPLE COMPUTER, INC. THE POSSESSOR AGREES TO THE FOLLOWING

I TO MAINTAIN THE DOCUMENT IN CONFIDENCE

II NOT TO REPRODUCE OR COPY IT

III NOT TO REVEAL OR PUBLISH IN WHOLE OR PART

APPLE COMPUTER INC.

SIZE	DRAWING NUMBER	REV.
D	051-7148	13
SCALE NONE	SHT 27 OF 110	

Page Notes

Power aliases required by this page:
- =PP1V8_S3_MEM
- =PPSPD_S0_MEM (2.5V - 3.3V)

Signal aliases required by this page:
- =I2C_MEM_SCL
- =I2C_MEM_SDA

BOM options provided by this page:
(NONE)

PART#	QTY	DESCRIPTION	REFERENCE DESIGNATOR(S)	CRITICAL	BOM OPTION
516S0503	1	DDR2 SODIMM STD CONN	J2800	CRITICAL	

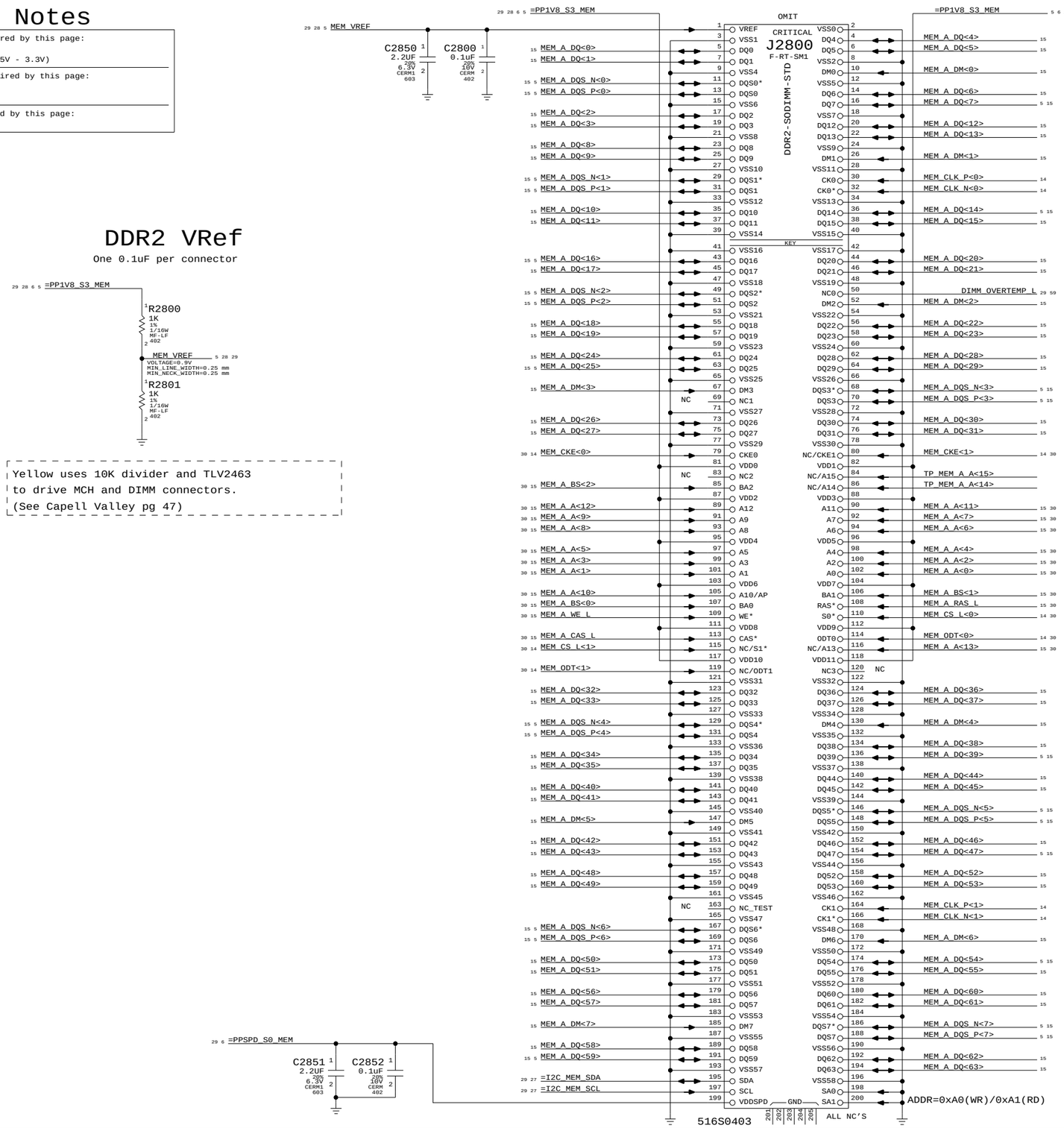

DDR2 SO-DIMM Connector A

SYNC_MASTER=(MASTER) SYNC_DATE=(MASTER)

NOTICE OF PROPRIETARY PROPERTY

THE INFORMATION CONTAINED HEREIN IS THE PROPRIETARY PROPERTY OF APPLE COMPUTER, INC. THE POSSESSOR AGREES TO THE FOLLOWING

I TO MAINTAIN THE DOCUMENT IN CONFIDENCE

II NOT TO REPRODUCE OR COPY IT

III NOT TO REVEAL OR PUBLISH IN WHOLE OR PART

APPLE COMPUTER INC.

SIZE	DRAWING NUMBER	REV.
D	051-7148	13
SCALE NONE	SHT 28 OF 110	

Page Notes

Power aliases required by this page:
- =PP1V8_S3_MEM
- =PPSPD_S0_MEM (2.5V - 3.3V)

Signal aliases required by this page:
- =I2C_MEM_SCL
- =I2C_MEM_SDA

BOM options provided by this page:
(NONE)

NOTE: This page does not supply VREF.
The reference voltage must be provided
by another page.

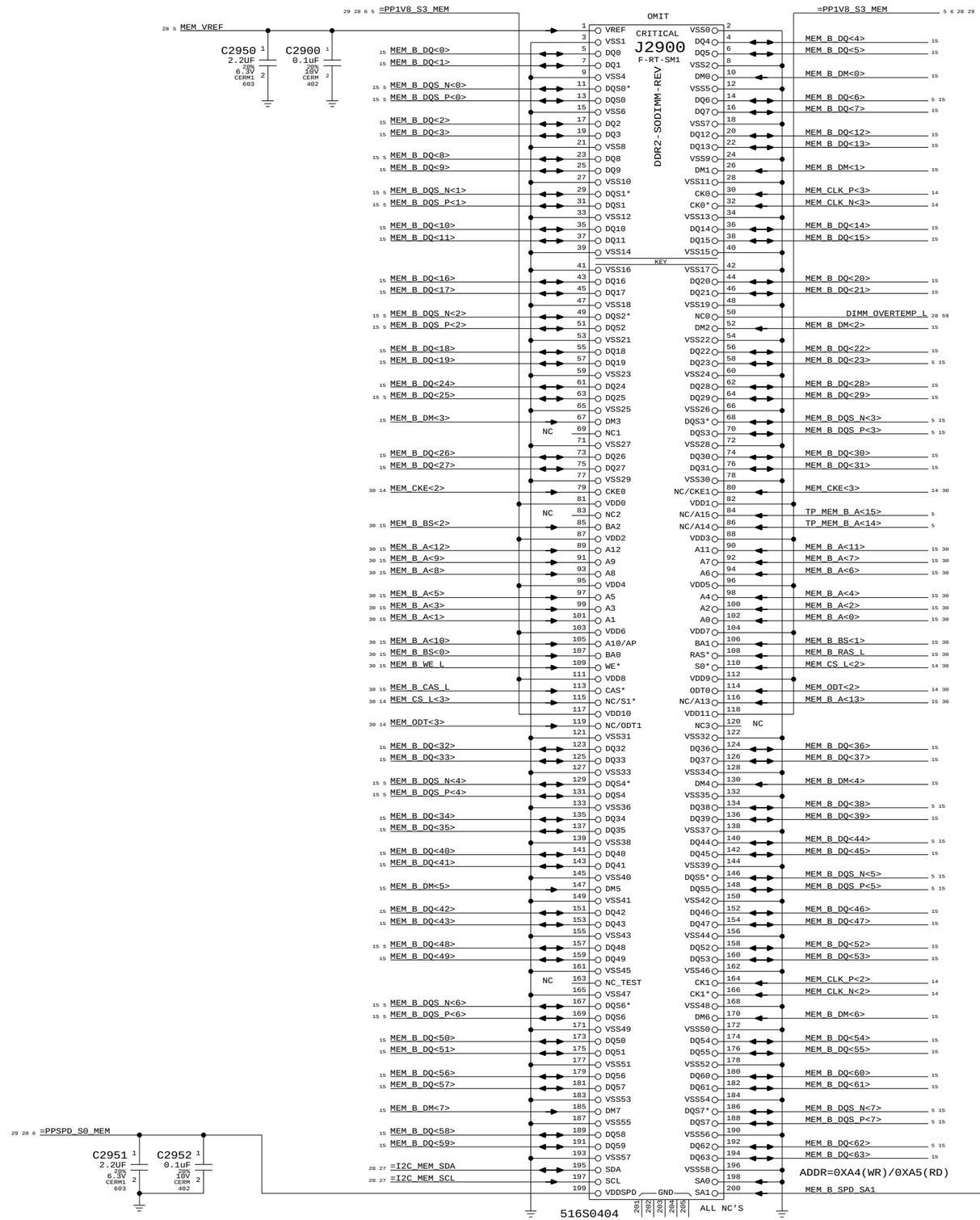

PART#	QTY	DESCRIPTION	REFERENCE DESIGNATOR(S)	CRITICAL	BOM OPTION
516S0504	1	DDR2 SODIMM REV CONN	J2900	CRITICAL	

DDR2 Bypass Caps

(For return current)

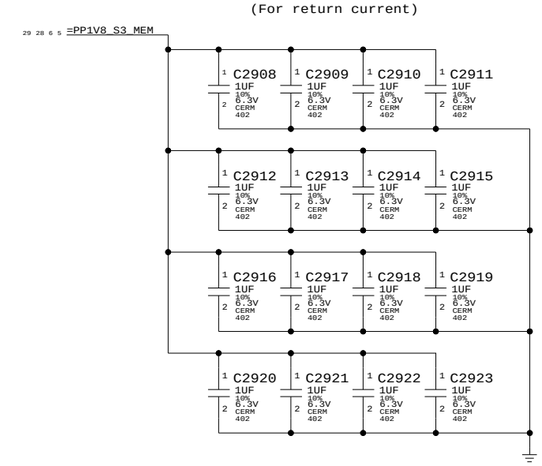

DDR2 SO-DIMM Connector B

SYNC_MASTER=(MASTER) SYNC_DATE=(MASTER)

NOTICE OF PROPRIETARY PROPERTY

THE INFORMATION CONTAINED HEREIN IS THE PROPRIETARY PROPERTY OF APPLE COMPUTER, INC. THE POSSESSOR AGREES TO THE FOLLOWING

I TO MAINTAIN THE DOCUMENT IN CONFIDENCE

II NOT TO REPRODUCE OR COPY IT

III NOT TO REVEAL OR PUBLISH IN WHOLE OR PART

APPLE COMPUTER INC.

SIZE	DRAWING NUMBER	REV.
D	051-7148	13
SCALE NONE	SHT 29 OF 110	

One cap for each side of every RPAK, one cap for every two discrete resistors
BOMOPTION shown at the top of each group applies to every part below it

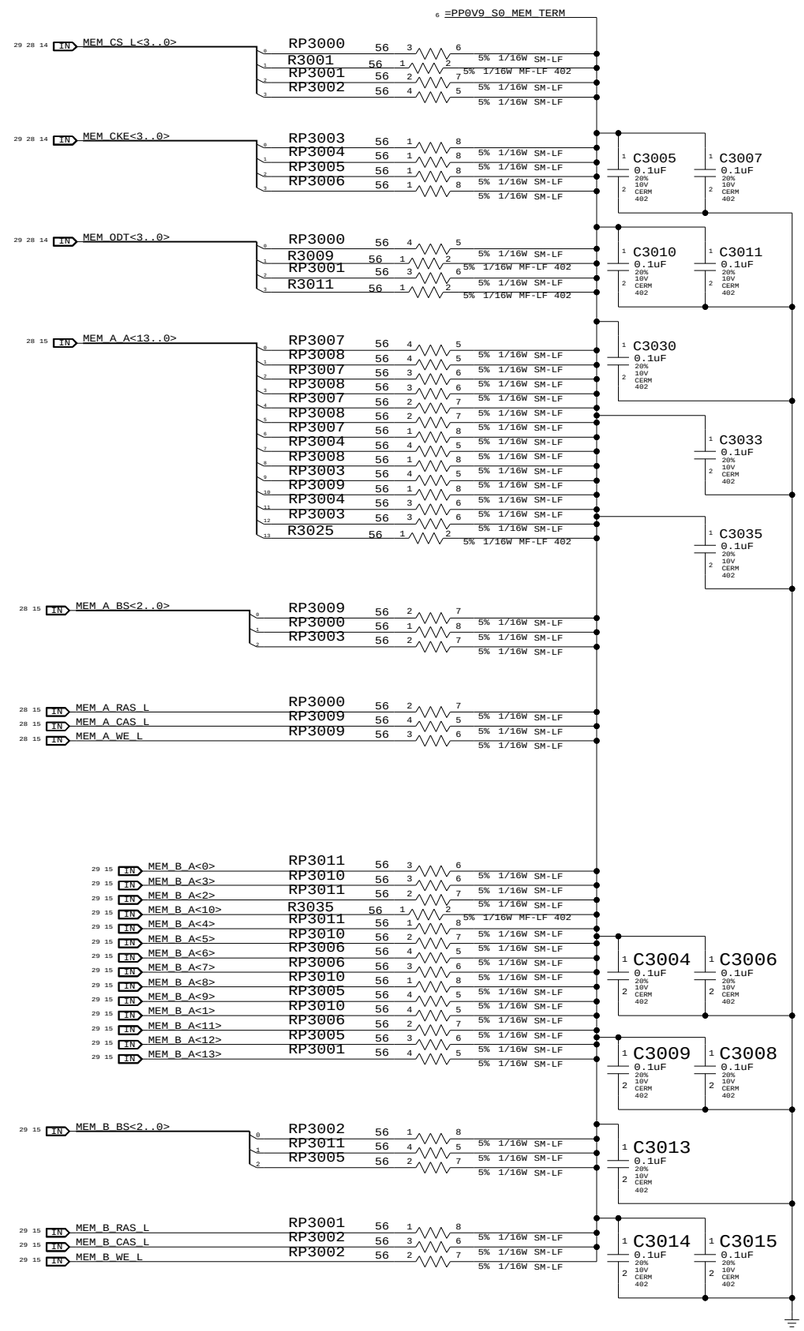

Memory Active Termination

NOTICE OF PROPRIETARY PROPERTY

THE INFORMATION CONTAINED HEREIN IS THE PROPRIETARY PROPERTY OF APPLE COMPUTER, INC. THE POSSESSOR AGREES TO THE FOLLOWING

I TO MAINTAIN THE DOCUMENT IN CONFIDENCE

II NOT TO REPRODUCE OR COPY IT

III NOT TO REVEAL OR PUBLISH IN WHOLE OR PART

APPLE COMPUTER INC.

SIZE	DRAWING NUMBER	REV.
D	051-7148	13

SCALE	SHT	OF
NONE	30	110

Page Notes

Power aliases required by this page:
- =PP5V_S0_MEMVTT
- =PP1V8_S0_MEMVTT
- =PP0V9_S0_MEMVTT_LDO

Signal aliases required by this page:
(NONE)

BOM options provided by this page:
(NONE)

DDR2 Vtt Regulator

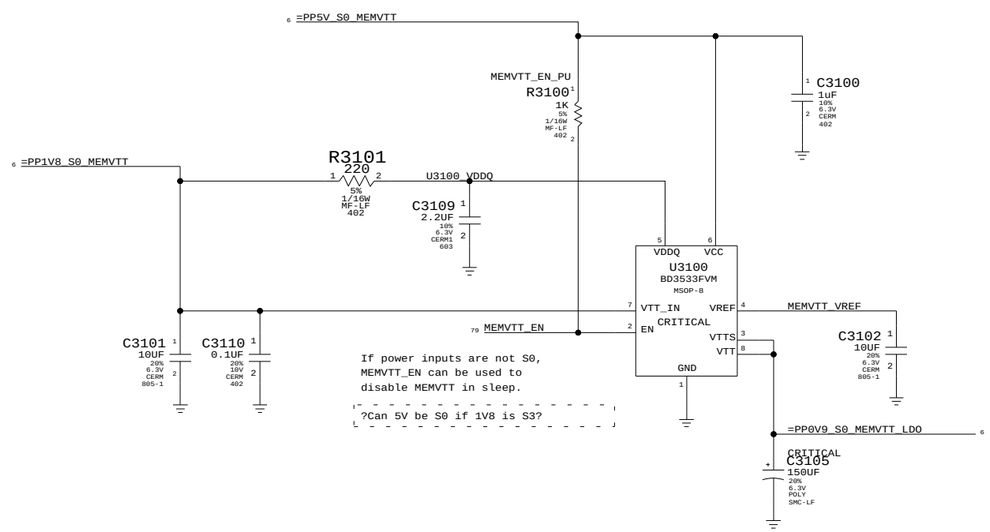

Memory Vtt Supply

SYNC_MASTER=(MASTER) SYNC_DATE=(MASTER)

NOTICE OF PROPRIETARY PROPERTY

THE INFORMATION CONTAINED HEREIN IS THE PROPRIETARY PROPERTY OF APPLE COMPUTER, INC. THE POSSESSOR AGREES TO THE FOLLOWING

I TO MAINTAIN THE DOCUMENT IN CONFIDENCE

II NOT TO REPRODUCE OR COPY IT

III NOT TO REVEAL OR PUBLISH IN WHOLE OR PART

APPLE COMPUTER INC.

SIZE	DRAWING NUMBER	REV.
D	051-7148	13

SCALE	SHT	OF
NONE	31	110

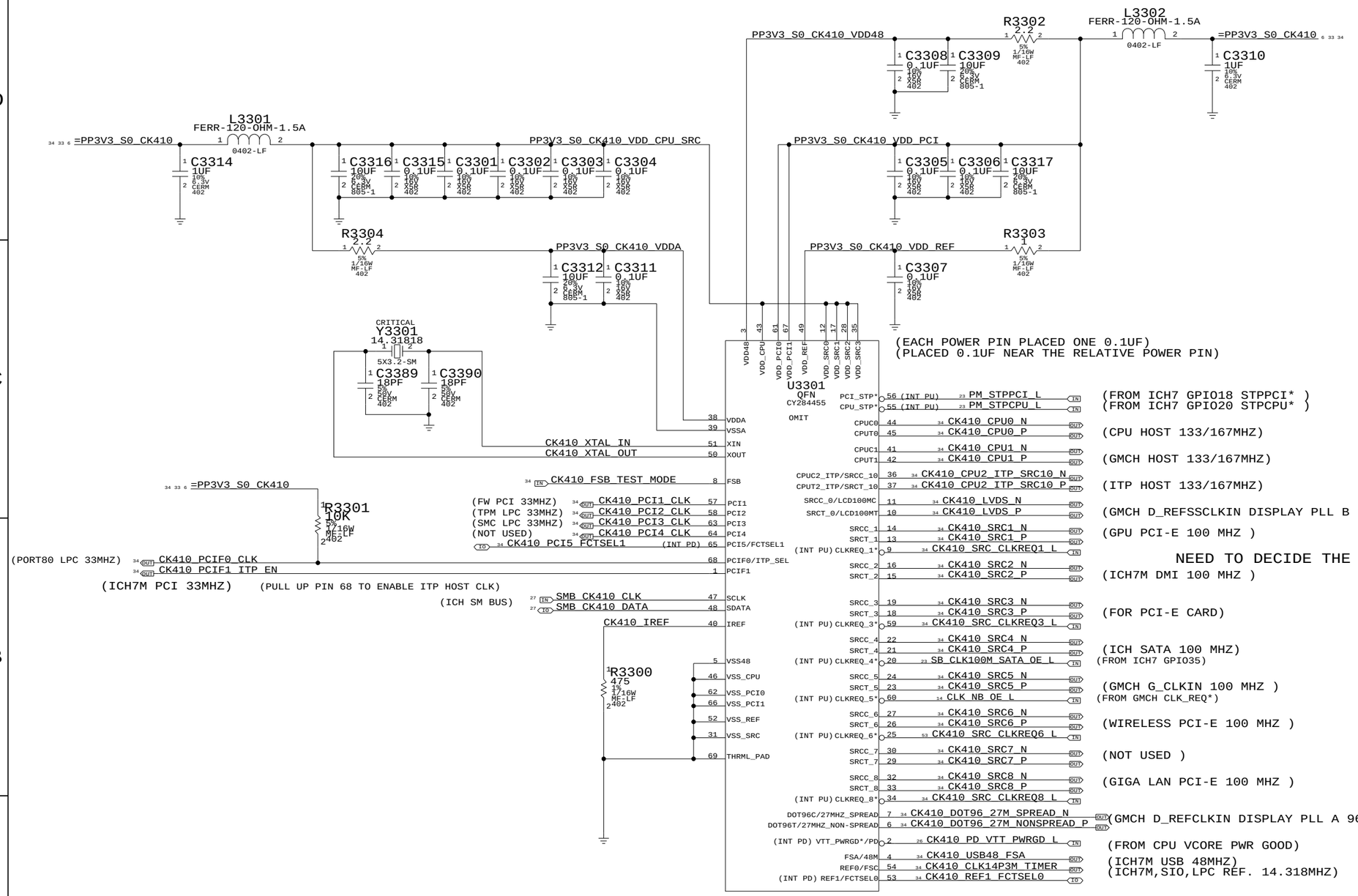

FCTSEL1	FCTSEL0	PIN 6	PIN 7	PIN 10	PIN 11	
0	0	DOT96T	DOT96C	100MT_SST	100MC_SST	* FOR INT. GRAPHIC SYSTEM
0	1	DOT96T	DOT96C	SRCT0	SRCC0	
1	0	27M NON SPREAD	27M SPREAD	SRCT0	SRCC0	* FOR EXT. GRAPHIC SYSTEM
1	1	OFF LOW	TBD	SRCT0	SRCC0	

CLOCKS

SYNC_MASTER=CLOCK SYNC_DATE=06/03/2005

NOTICE OF PROPRIETARY PROPERTY

THE INFORMATION CONTAINED HEREIN IS THE PROPRIETARY PROPERTY OF APPLE COMPUTER, INC. THE POSSESSOR AGREES TO THE FOLLOWING

I TO MAINTAIN THE DOCUMENT IN CONFIDENCE

II NOT TO REPRODUCE OR COPY IT

III NOT TO REVEAL OR PUBLISH IN WHOLE OR PART

APPLE COMPUTER INC.

SIZE	DRAWING NUMBER	REV.
D	051-7148	13

SCALE NONE SHT 33 OF 110

NOTE: USE THESE PULL-DOWNS IF NOT CONNECTED TO GPIO'S

33 CK410_SRC_CLKREQ1_L (GPU CLK OE*) — R3495 1K
33 CK410_SRC_CLKREQ3_L (SPARE CLK OE*) — R3494 1K
33 CK410_SRC_CLKREQ8_L (YUKON CLK OE*) — R3493 1K

33 IN CK410_PCI5_FCTSEL1 — R3499 1K (1/16W 5% MF-LF 402) — =PP3V3_S0_CK410 6 33

R3497 2.2K (5% 1/16W MF-LF 402): CK410_FSC 34 — SB_CLK14P3M_TIMER OUT 5 23

33 IN CK410_CLK14P3M_TIMER — R3498 33 (1/16W 5% MF-LF 402)

33 IN CK410_REF1_FCTSEL0 — R3496 33 — TP_CLK14P3M_SPARE OUT

R3451 2.2K (5% 1/16W MF-LF 402): CK410_FSA 34 — SB_CLK48M_USBCTLR OUT 5 23

33 IN CK410_USB48_FSA — R3400 33 (1/16W 5% MF-LF 402)

33 IN CK410_PCI4_CLK — R3406 33 — TP_PCI_CLK_SPARE OUT 9

33 IN CK410_PCI3_CLK — R3405 33 — PCI_CLK_SMC OUT 58
33 IN CK410_PCI2_CLK — R3404 33 — PCI_CLK_TPM OUT 67
33 IN CK410_PCI1_CLK — R3403 33 — PCI_CLK_FW OUT 44

33 IN CK410_PCIF1_ITP_EN — R3401 33 — PCI_CLK_SB OUT 5 22
33 IN CK410_PCIF0_CLK — R3402 33 — PCI_CLK_PORT80 OUT 60

33 IN CK410_CPU1_P — 33 R3407 — FSB_CLK_NB_P OUT 5 12 34
33 IN CK410_CPU1_N — 33 R3408 — FSB_CLK_NB_N OUT 5 12 34
33 IN CK410_CPU0_P — 33 R3409 — FSB_CLK_CPU_P OUT 5 7 34
33 IN CK410_CPU0_N — 33 R3410 — FSB_CLK_CPU_N OUT 5 7 34

33 IN CK410_CPU2_ITP_SRC10_P — 33 R3411 — 34 FSB_CLK_XDP_P (MAKE_BASE=TRUE) — CPU_XDP_CLK_P 11
33 IN CK410_CPU2_ITP_SRC10_N — 33 R3412 — 34 FSB_CLK_XDP_N (MAKE_BASE=TRUE) — CPU_XDP_CLK_N 11

33 IN CK410_SRC6_P — 33 R3413 — AIRPORT_CLK100M_PCIE_P OUT 34 53
33 IN CK410_SRC6_N — 33 R3414 — AIRPORT_CLK100M_PCIE_N OUT 34 53
33 IN CK410_SRC5_P — 33 R3415 — NB_CLK100M_GCLKIN_P OUT 5 14 34
33 IN CK410_SRC5_N — 33 R3416 — NB_CLK100M_GCLKIN_N OUT 5 14 34
33 IN CK410_SRC4_P — 33 R3417 — SB_CLK100M_SATA_P OUT 5 21 34
33 IN CK410_SRC4_N — 33 R3418 — SB_CLK100M_SATA_N OUT 5 21 34
33 IN CK410_SRC2_P — 33 R3419 — SB_CLK100M_DMI_P OUT 5 22 34
33 IN CK410_SRC2_N — 33 R3420 — SB_CLK100M_DMI_N OUT 5 22 34
33 IN CK410_SRC8_P — 33 R3421 — ENET_CLK100M_PCIE_P OUT 5 34 41
33 IN CK410_SRC8_N — 33 R3422 — ENET_CLK100M_PCIE_N OUT 5 34 41
33 IN CK410_SRC1_P — 33 R3423 — GPU_CLK100M_PCIE_P OUT 5 34 84
33 IN CK410_SRC1_N — 33 R3424 — GPU_CLK100M_PCIE_N OUT 5 34 84

33 IN CK410_LVDS_P — TP_CK410_LVDS_P
33 IN CK410_LVDS_N — TP_CK410_LVDS_N

33 IN CK410_DOT96_27M_SPREAD_N — 33 R3470 — CK410_27M_SPREAD OUT 92
33 IN CK410_DOT96_27M_NONSPREAD_P — 33 R3471 — CK410_27M_NONSPREAD OUT 92

33 IN CK410_SRC3_P — 33 R3492 — SPARE_SRC3_P R3488 49.9
33 IN CK410_SRC3_N — 33 R3491 — SPARE_SRC3_N R3487 49.9
33 IN CK410_SRC7_P — 33 R3490 — SPARE_SRC7_P R3486 49.9
33 IN CK410_SRC7_N — 33 R3489 — SPARE_SRC7_N R3485 49.9

34 12 5 FSB_CLK_NB_P — R3429 49.9 (1% 402 1/16W MF-LF)
34 12 5 FSB_CLK_NB_N — R3430 49.9
34 7 5 FSB_CLK_CPU_P — R3431 49.9
34 7 5 FSB_CLK_CPU_N — R3432 49.9
34 FSB_CLK_XDP_P — R3433 49.9
34 FSB_CLK_XDP_N — R3434 49.9
53 34 AIRPORT_CLK100M_PCIE_P — R3435 49.9
53 34 AIRPORT_CLK100M_PCIE_N — R3436 49.9
34 14 5 NB_CLK100M_GCLKIN_P — R3438 49.9
34 14 5 NB_CLK100M_GCLKIN_N — R3437 49.9
34 21 5 SB_CLK100M_SATA_P — R3439 49.9
34 21 5 SB_CLK100M_SATA_N — R3440 49.9
34 22 5 SB_CLK100M_DMI_P — R3442 49.9
34 22 5 SB_CLK100M_DMI_N — R3441 49.9
41 34 5 ENET_CLK100M_PCIE_P — R3443 49.9
41 34 5 ENET_CLK100M_PCIE_N — R3444 49.9
84 34 5 GPU_CLK100M_PCIE_P — R3446 49.9
84 34 5 GPU_CLK100M_PCIE_N — R3445 49.9

FSB FREQUENCY SELECT:

	STUFF	NO STUFF
CPU DRIVEN	R3454 R3459 R3463	R3452 R3457 R3461
533MHZ (133MHZ CPU CLK)	R3452 R3457 R3461	R3454 R3459 R3463
667MHZ (166MHZ CPU CLK)	R3452 R3461	R3454 R3459 R3463 R3457

81 34 6 PP1V05_S0

14 NB_BSEL<0> — R3453 1K (1/16W 5% MF-LF 402)
34 CK410_FSA
R3455 1K (1/16W 5% MF-LF 402)
7 CPU_BSEL<0>

NOSTUFF R3452 56 (5% 1/16W MF-LF 402)
R3454 0 (5% 1/16W MF-LF 402)

81 34 6 PP1V05_S0

14 NB_BSEL<1> — R3458 1K (1/16W 5% MF-LF 402)
33 CK410_FSB_TEST_MODE
7 CPU_BSEL<1>

R3456 1K (5% 1/16W MF-LF 402)
NOSTUFF R3457 0 (5% 1/16W MF-LF 402)
R3459 0 (5% 1/16W MF-LF 402)

81 34 6 PP1V05_S0

14 NB_BSEL<2> — R3462 1K (1/16W 5% MF-LF 402)
34 CK410_FSC
7 CPU_BSEL<2>

R3460 1K (5% 1/16W MF-LF 402)
NOSTUFF R3461 0 (5% 1/16W MF-LF 402)
R3463 0 (5% 1/16W MF-LF 402)

CLOCKS: TERMINATIONS

SYNC_MASTER=N/A SYNC_DATE=N/A

NOTICE OF PROPRIETARY PROPERTY

THE INFORMATION CONTAINED HEREIN IS THE PROPRIETARY PROPERTY OF APPLE COMPUTER, INC. THE POSSESSOR AGREES TO THE FOLLOWING

I TO MAINTAIN THE DOCUMENT IN CONFIDENCE
II NOT TO REPRODUCE OR COPY IT
III NOT TO REVEAL OR PUBLISH IN WHOLE OR PART

APPLE COMPUTER INC.

SIZE	DRAWING NUMBER	REV.
D	051-7148	13

SCALE NONE — SHT 34 OF 110

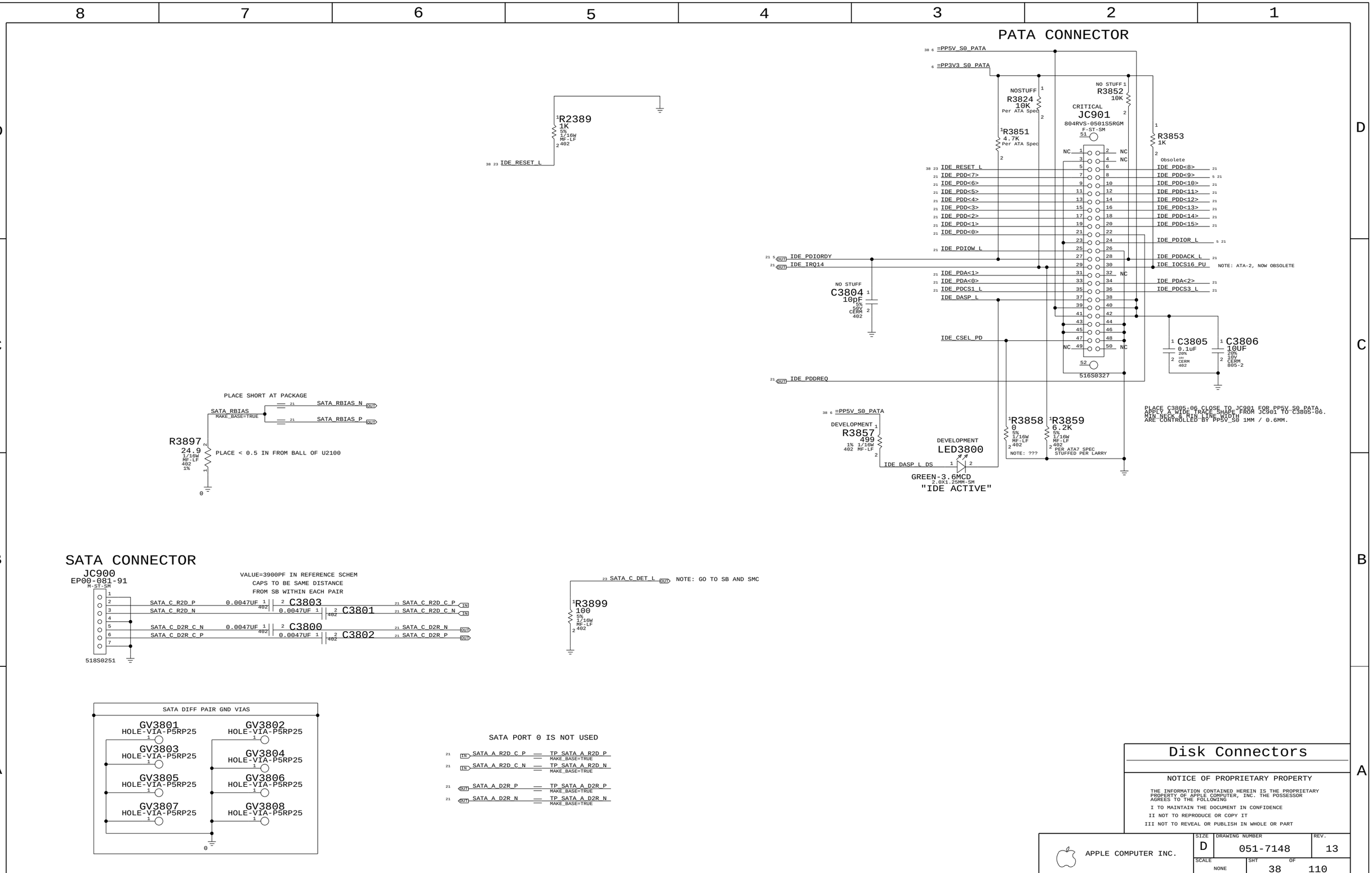

Disk Connectors

NOTICE OF PROPRIETARY PROPERTY

THE INFORMATION CONTAINED HEREIN IS THE PROPRIETARY PROPERTY OF APPLE COMPUTER, INC. THE POSSESSOR AGREES TO THE FOLLOWING

I TO MAINTAIN THE DOCUMENT IN CONFIDENCE

II NOT TO REPRODUCE OR COPY IT

III NOT TO REVEAL OR PUBLISH IN WHOLE OR PART

APPLE COMPUTER INC.

SIZE	DRAWING NUMBER	REV.
D	051-7148	13
SCALE NONE	SHT 38	OF 110

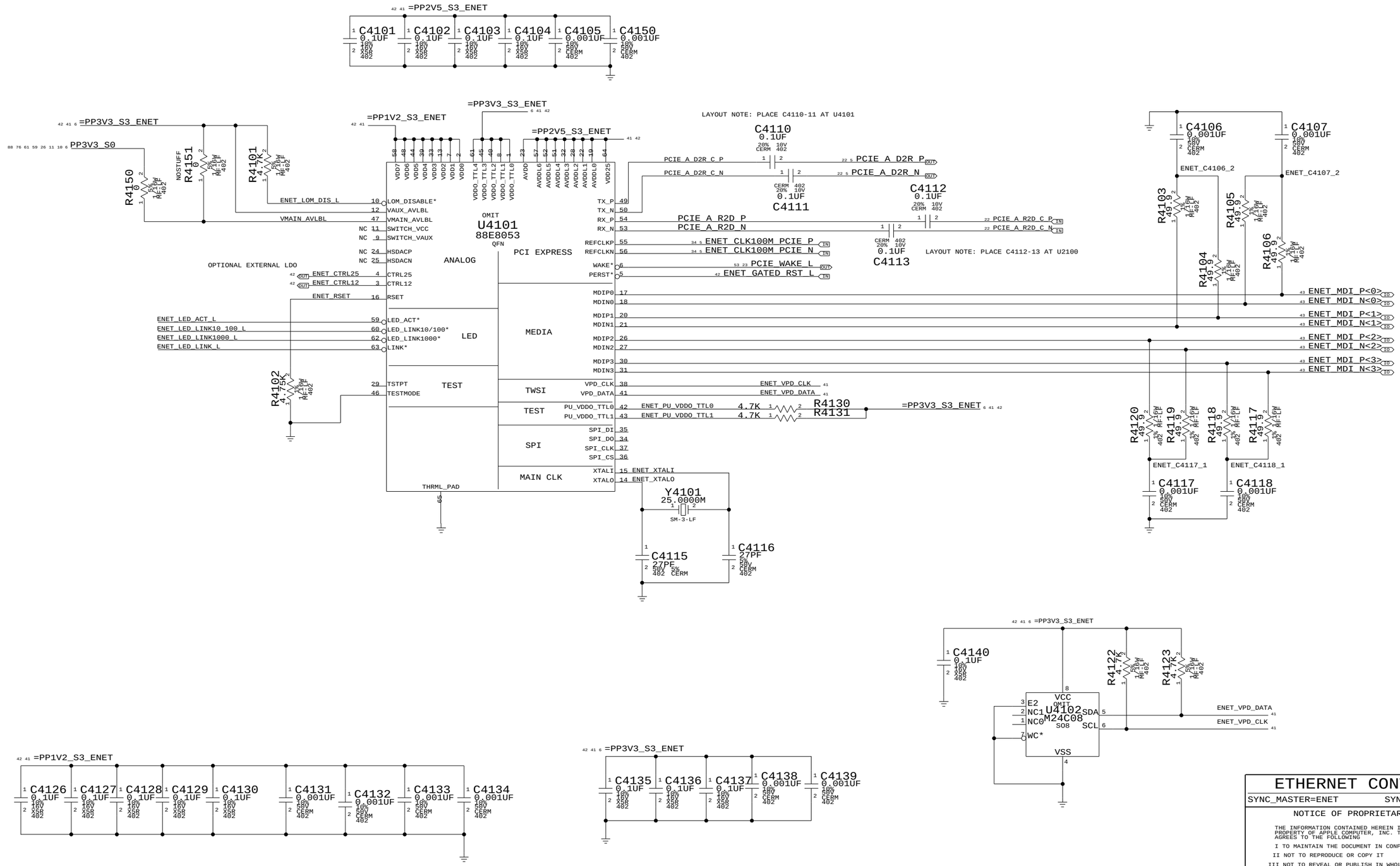

ETHERNET CONTROLLER

SYNC_MASTER=ENET SYNC_DATE=06/22/2005

NOTICE OF PROPRIETARY PROPERTY

THE INFORMATION CONTAINED HEREIN IS THE PROPRIETARY PROPERTY OF APPLE COMPUTER, INC. THE POSSESSOR AGREES TO THE FOLLOWING

I TO MAINTAIN THE DOCUMENT IN CONFIDENCE

II NOT TO REPRODUCE OR COPY IT

III NOT TO REVEAL OR PUBLISH IN WHOLE OR PART

APPLE COMPUTER INC.

SIZE	DRAWING NUMBER	REV.
D	051-7148	13

SCALE NONE SHT 41 OF 110

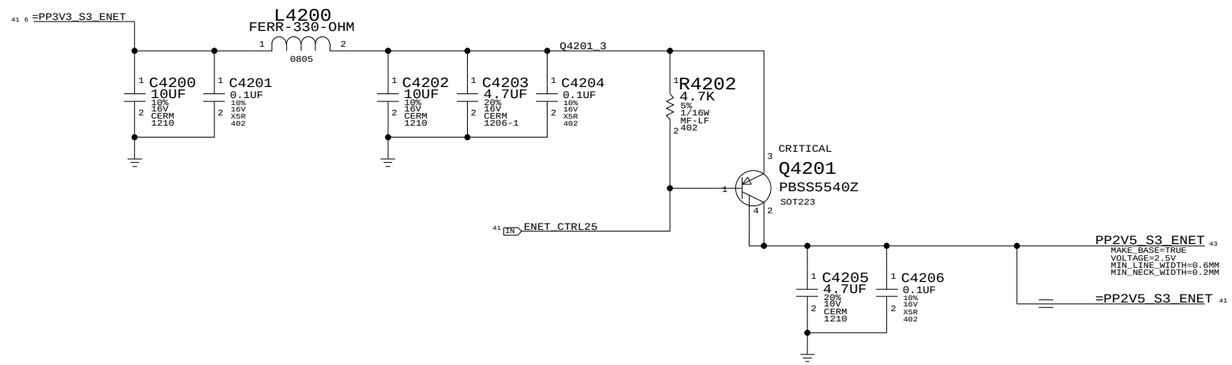

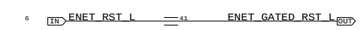

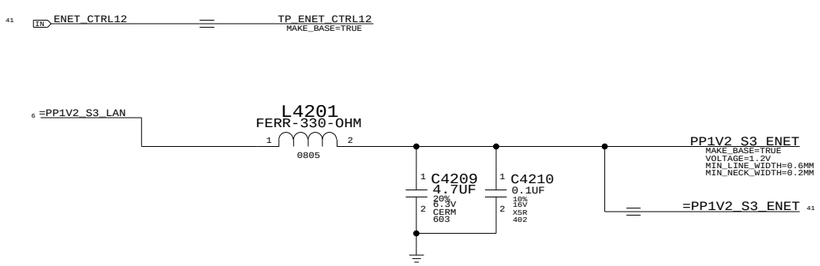

ETHERNET MISC

NOTICE OF PROPRIETARY PROPERTY

THE INFORMATION CONTAINED HEREIN IS THE PROPRIETARY PROPERTY OF APPLE COMPUTER, INC. THE POSSESSOR AGREES TO THE FOLLOWING

I TO MAINTAIN THE DOCUMENT IN CONFIDENCE

II NOT TO REPRODUCE OR COPY IT

III NOT TO REVEAL OR PUBLISH IN WHOLE OR PART

APPLE COMPUTER INC.

SIZE	DRAWING NUMBER	REV.
D	051-7148	13
SCALE NONE	SHT 42 OF 110	

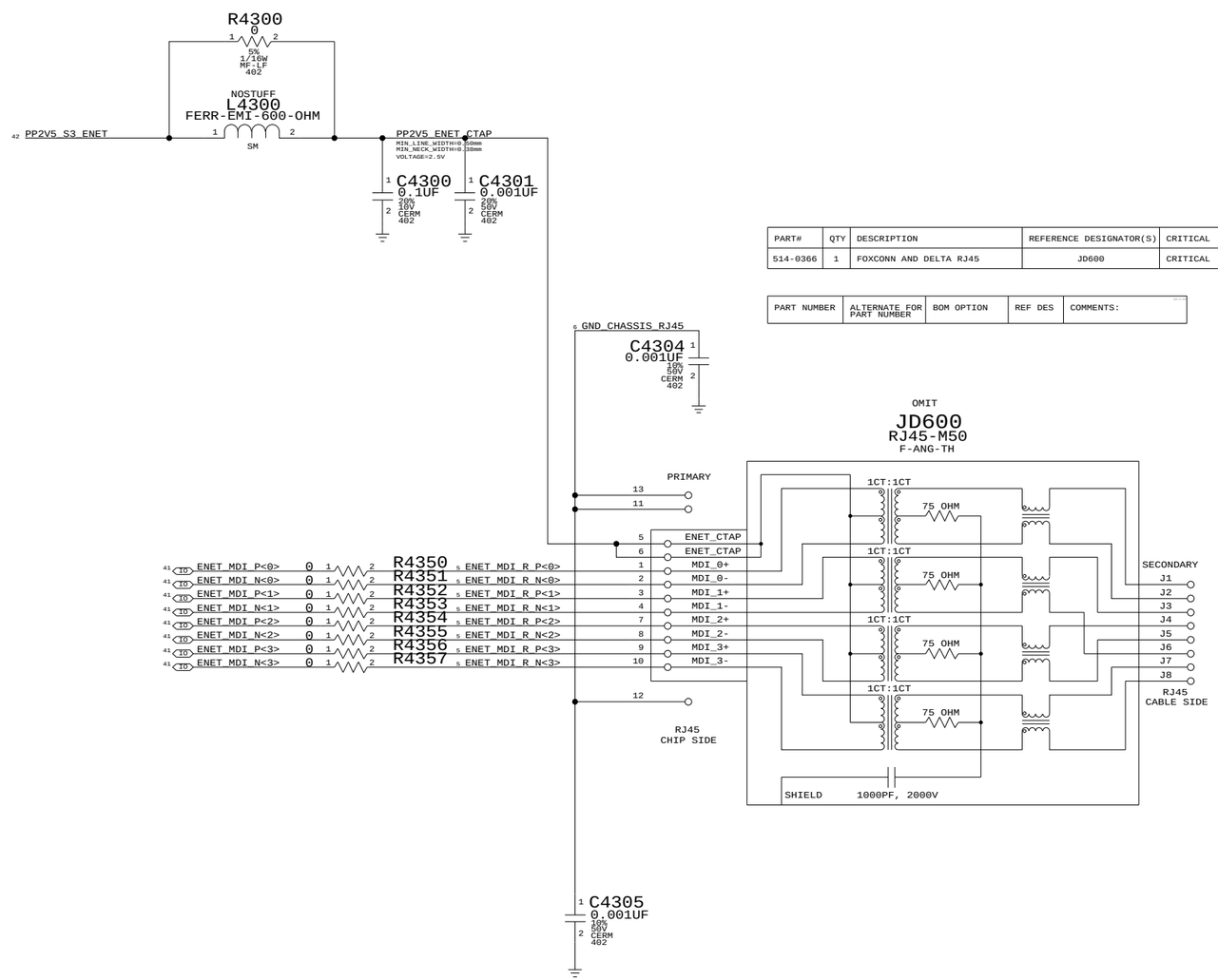

PART#	QTY	DESCRIPTION	REFERENCE DESIGNATOR(S)	CRITICAL	BOM OPTION
514-0366	1	FOXCONN AND DELTA RJ45	JD600	CRITICAL	

PART NUMBER	ALTERNATE FOR PART NUMBER	BOM OPTION	REF DES	COMMENTS:

ETHERNET CONNECTOR

NOTICE OF PROPRIETARY PROPERTY

THE INFORMATION CONTAINED HEREIN IS THE PROPRIETARY PROPERTY OF APPLE COMPUTER, INC. THE POSSESSOR AGREES TO THE FOLLOWING

I TO MAINTAIN THE DOCUMENT IN CONFIDENCE

II NOT TO REPRODUCE OR COPY IT

III NOT TO REVEAL OR PUBLISH IN WHOLE OR PART

APPLE COMPUTER INC.

SIZE	DRAWING NUMBER	REV.
D	051-7148	13
SCALE NONE	SHT 43	OF 110

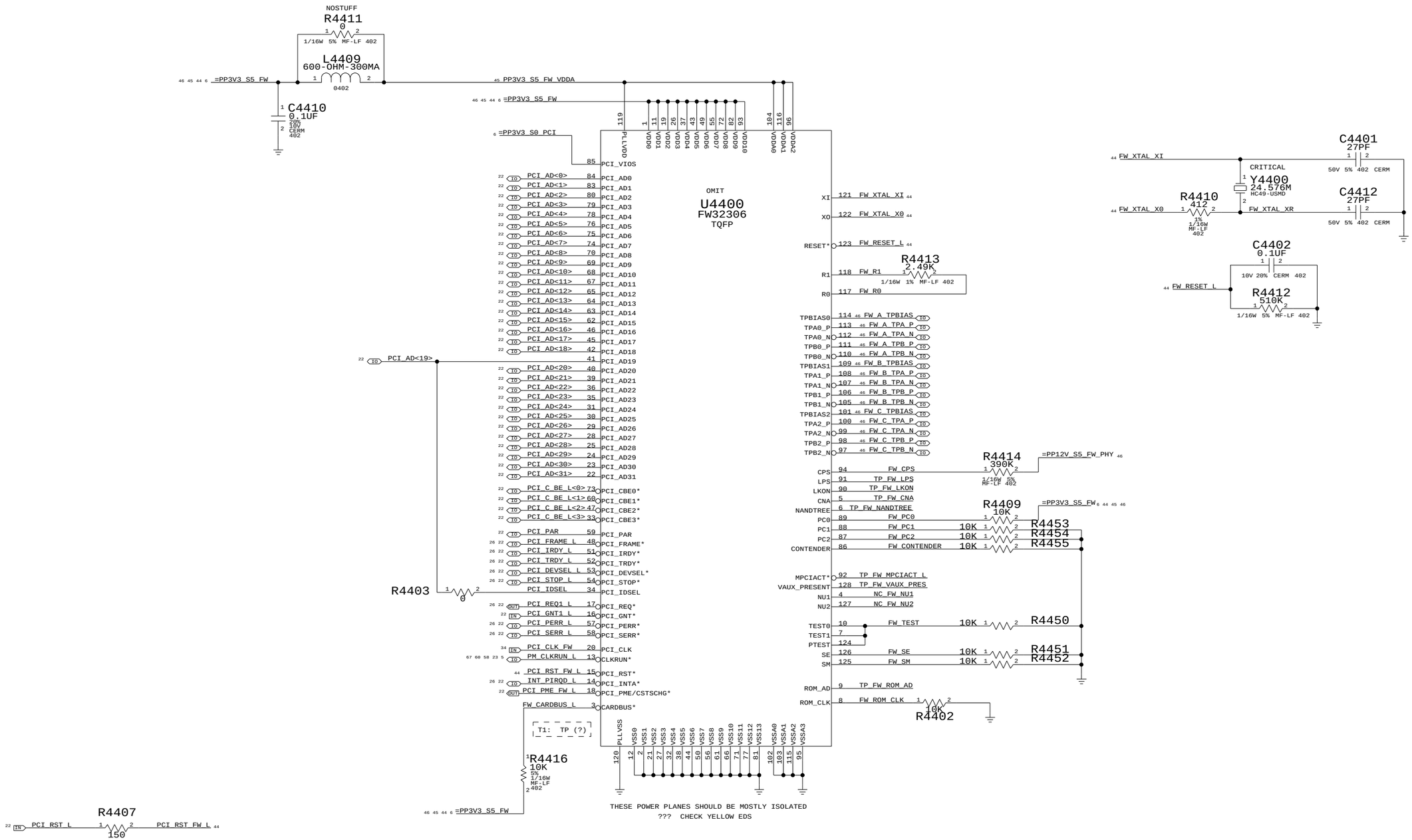

FW: FW323-06

SYNC_MASTER=N/A SYNC_DATE=N/A

NOTICE OF PROPRIETARY PROPERTY

THE INFORMATION CONTAINED HEREIN IS THE PROPRIETARY PROPERTY OF APPLE COMPUTER, INC. THE POSSESSOR AGREES TO THE FOLLOWING

I TO MAINTAIN THE DOCUMENT IN CONFIDENCE

II NOT TO REPRODUCE OR COPY IT

III NOT TO REVEAL OR PUBLISH IN WHOLE OR PART

APPLE COMPUTER INC.

SIZE	DRAWING NUMBER	REV.
D	051-7148	13
SCALE NONE	SHT 44 OF 110	

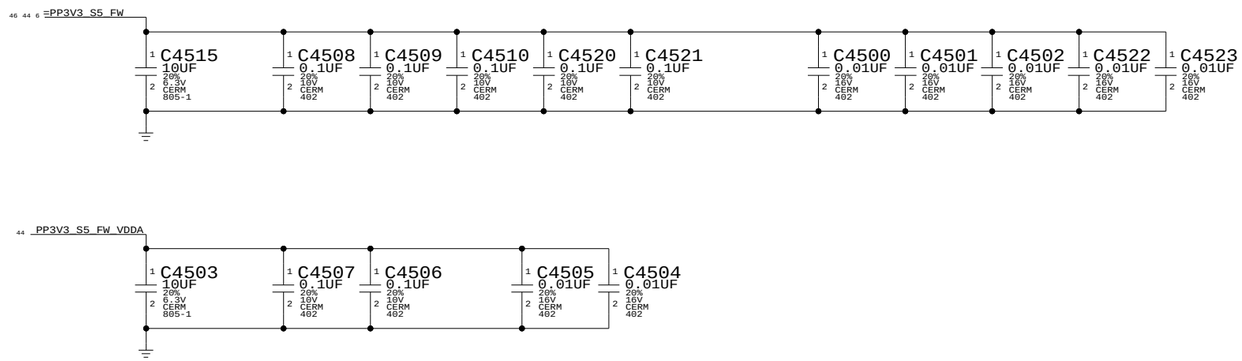

FW: DECAPS

SYNC_MASTER=N/A SYNC_DATE=N/A

NOTICE OF PROPRIETARY PROPERTY

THE INFORMATION CONTAINED HEREIN IS THE PROPRIETARY PROPERTY OF APPLE COMPUTER, INC. THE POSSESSOR AGREES TO THE FOLLOWING

I TO MAINTAIN THE DOCUMENT IN CONFIDENCE

II NOT TO REPRODUCE OR COPY IT

III NOT TO REVEAL OR PUBLISH IN WHOLE OR PART

APPLE COMPUTER INC.

SIZE	DRAWING NUMBER	REV.
D	051-7148	13
SCALE NONE	SHT 45 OF 110	

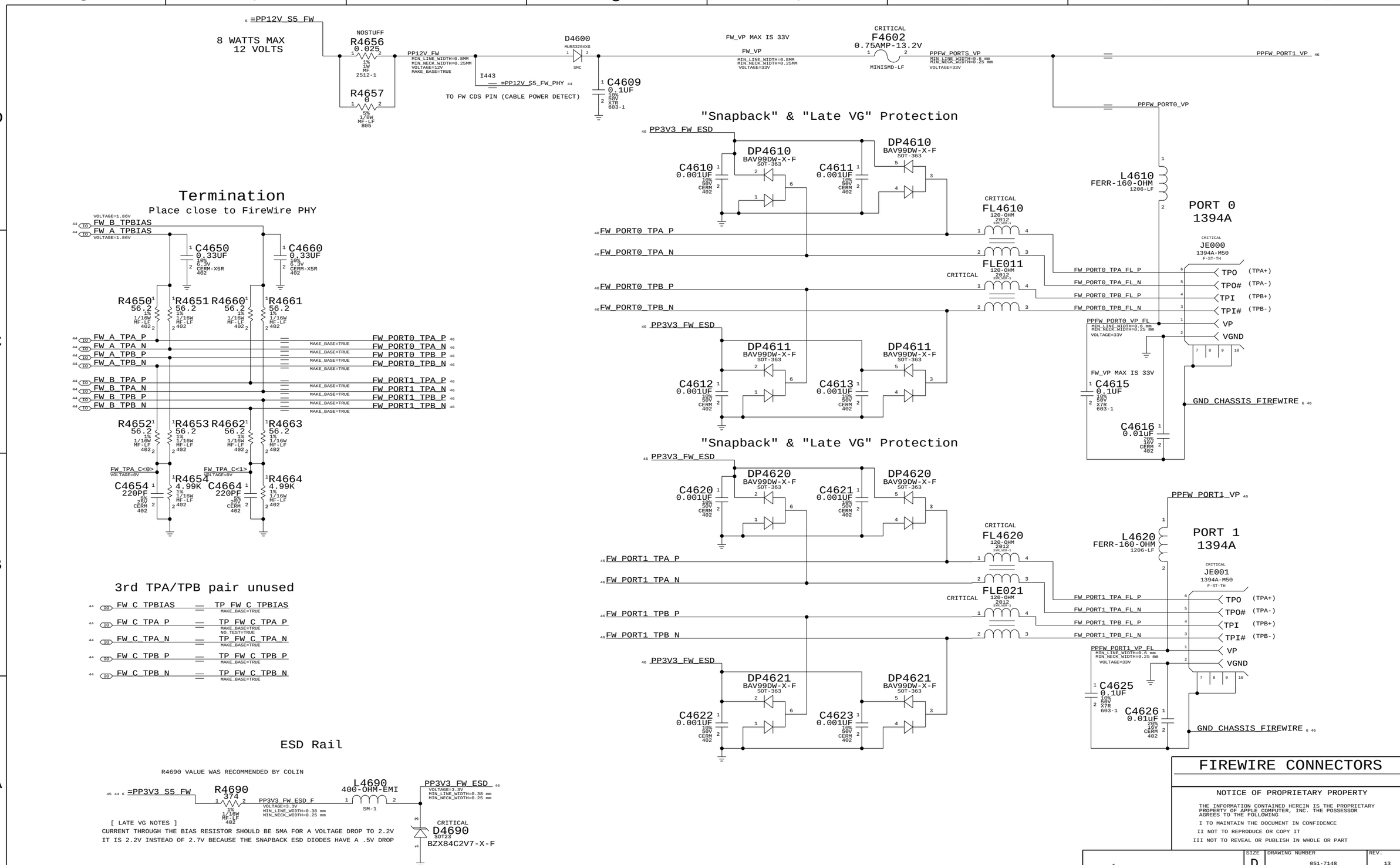

FIREWIRE CONNECTORS

NOTICE OF PROPRIETARY PROPERTY

THE INFORMATION CONTAINED HEREIN IS THE PROPRIETARY PROPERTY OF APPLE COMPUTER, INC. THE POSSESSOR AGREES TO THE FOLLOWING

I TO MAINTAIN THE DOCUMENT IN CONFIDENCE

II NOT TO REPRODUCE OR COPY IT

III NOT TO REVEAL OR PUBLISH IN WHOLE OR PART

APPLE COMPUTER INC.

SIZE	DRAWING NUMBER	REV.
D	051-7148	13
SCALE NONE	SHT 46 OF 110	

External USB Ports

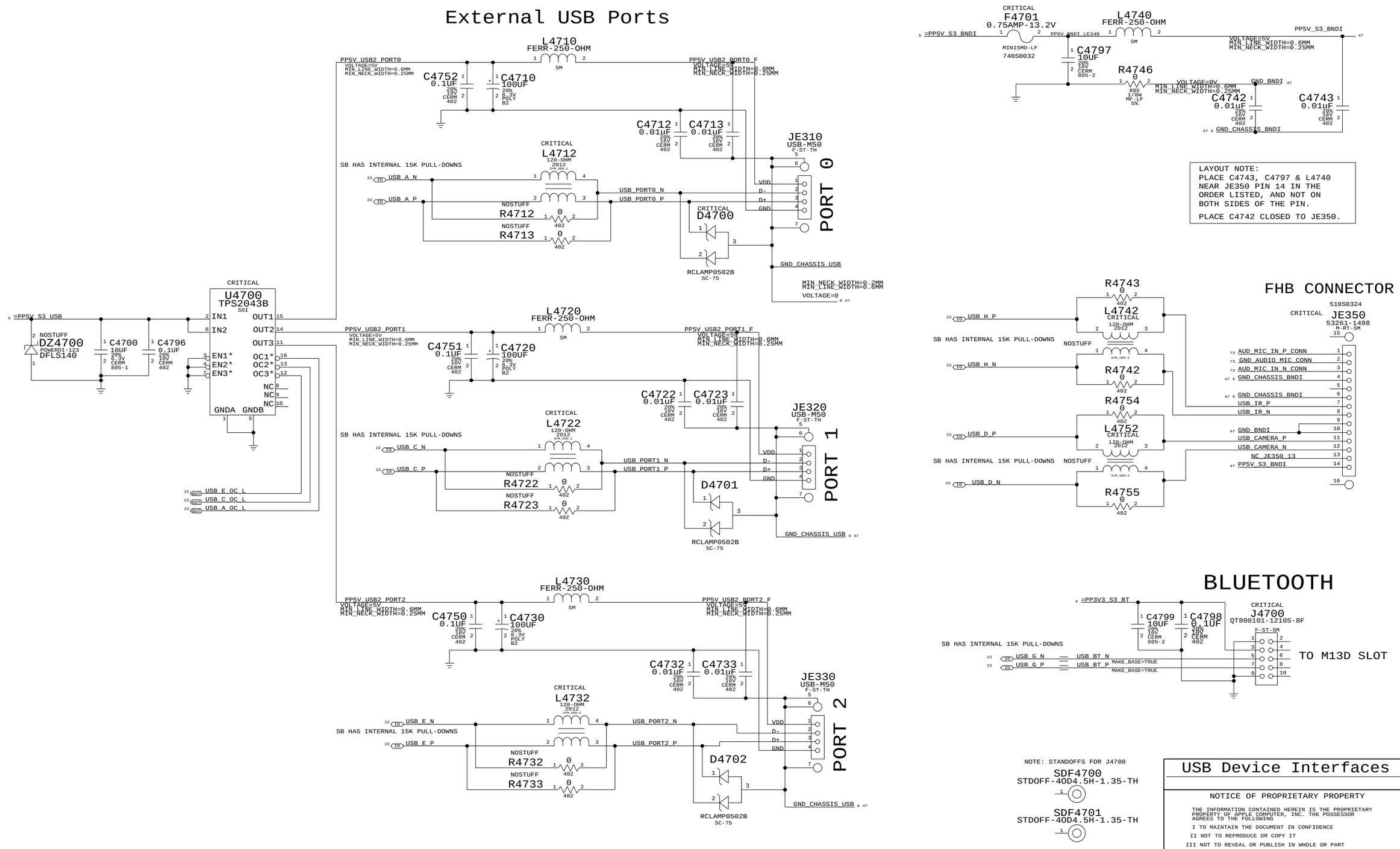

USB Device Interfaces

NOTICE OF PROPRIETARY PROPERTY

THE INFORMATION CONTAINED HEREIN IS THE PROPRIETARY PROPERTY OF APPLE COMPUTER, INC. THE POSSESSOR AGREES TO THE FOLLOWING

I TO MAINTAIN THE DOCUMENT IN CONFIDENCE

II NOT TO REPRODUCE OR COPY IT

III NOT TO REVEAL OR PUBLISH IN WHOLE OR PART

APPLE COMPUTER INC.

SIZE	DRAWING NUMBER	REV.
D	051-7148	13

SCALE: NONE | SHT 47 OF 110

BLANK

NOTICE OF PROPRIETARY PROPERTY

THE INFORMATION CONTAINED HEREIN IS THE PROPRIETARY PROPERTY OF APPLE COMPUTER, INC. THE POSSESSOR AGREES TO THE FOLLOWING

I TO MAINTAIN THE DOCUMENT IN CONFIDENCE

II NOT TO REPRODUCE OR COPY IT

III NOT TO REVEAL OR PUBLISH IN WHOLE OR PART

APPLE COMPUTER INC.

SIZE	DRAWING NUMBER	REV.
D	051-7148	13
SCALE NONE	SHT 48 OF 110	

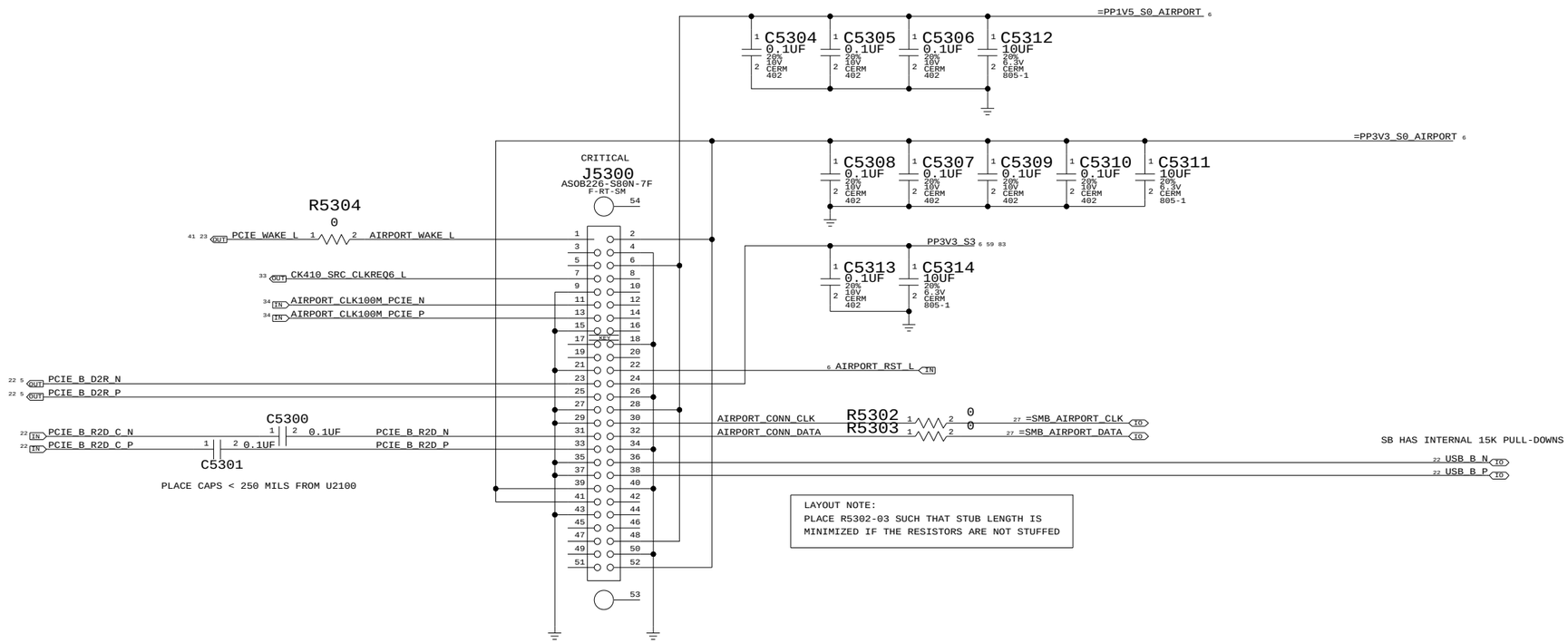

AIRPORT CONN

SYNC_MASTER=N/A SYNC_DATE=N/A

NOTICE OF PROPRIETARY PROPERTY

THE INFORMATION CONTAINED HEREIN IS THE PROPRIETARY PROPERTY OF APPLE COMPUTER, INC. THE POSSESSOR AGREES TO THE FOLLOWING

I TO MAINTAIN THE DOCUMENT IN CONFIDENCE

II NOT TO REPRODUCE OR COPY IT

III NOT TO REVEAL OR PUBLISH IN WHOLE OR PART

APPLE COMPUTER INC.

SIZE	DRAWING NUMBER	REV.
D	051-7148	13
SCALE NONE	SHT 53 OF 110	

22	IN	PCIE_C_R2D_C_N	TP_PCIE_C_R2D_C_N	MAKE_BASE=TRUE
22	IN	PCIE_C_R2D_C_P	TP_PCIE_C_R2D_C_P	MAKE_BASE=TRUE
22	OUT	PCIE_C_D2R_N	TP_PCIE_C_D2R_N	MAKE_BASE=TRUE
22	OUT	PCIE_C_D2R_P	TP_PCIE_C_D2R_P	MAKE_BASE=TRUE
22	IN	PCIE_D_R2D_C_N	TP_PCIE_D_R2D_C_N	MAKE_BASE=TRUE
22	IN	PCIE_D_R2D_C_P	TP_PCIE_D_R2D_C_P	MAKE_BASE=TRUE
22	OUT	PCIE_D_D2R_N	TP_PCIE_D_D2R_N	MAKE_BASE=TRUE
22	OUT	PCIE_D_D2R_P	TP_PCIE_D_D2R_P	MAKE_BASE=TRUE
22	IN	PCIE_E_R2D_C_N	TP_PCIE_E_R2D_C_N	MAKE_BASE=TRUE
22	IN	PCIE_E_R2D_C_P	TP_PCIE_E_R2D_C_P	MAKE_BASE=TRUE
22	OUT	PCIE_E_D2R_N	TP_PCIE_E_D2R_N	MAKE_BASE=TRUE
22	OUT	PCIE_E_D2R_P	TP_PCIE_E_D2R_P	MAKE_BASE=TRUE
22	IN	PCIE_F_R2D_C_N	TP_PCIE_F_R2D_C_N	MAKE_BASE=TRUE
22	IN	PCIE_F_R2D_C_P	TP_PCIE_F_R2D_C_P	MAKE_BASE=TRUE
22	OUT	PCIE_F_D2R_N	TP_PCIE_F_D2R_N	MAKE_BASE=TRUE
22	OUT	PCIE_F_D2R_P	TP_PCIE_F_D2R_P	MAKE_BASE=TRUE

PCIE UNUSED PORTS

SYNC_MASTER=N/A SYNC_DATE=N/A

NOTICE OF PROPRIETARY PROPERTY

THE INFORMATION CONTAINED HEREIN IS THE PROPRIETARY PROPERTY OF APPLE COMPUTER, INC. THE POSSESSOR AGREES TO THE FOLLOWING

I TO MAINTAIN THE DOCUMENT IN CONFIDENCE

II NOT TO REPRODUCE OR COPY IT

III NOT TO REVEAL OR PUBLISH IN WHOLE OR PART

APPLE COMPUTER INC.

SIZE	DRAWING NUMBER	REV.
D	051-7148	13
SCALE NONE	SHT 54 OF 110	

UNUSED PINS HAVE THE FORMAT
SMC_XXX WHERE XXX IS THE PORT NUMBER.
THEY ARE SET BY SOFTWARE TO BE
DRIVEN OUTPUTS ALWAYS SO THEY
CAN BE LEFT NO-CONNECTED.

OMIT
U5800
SMC_H8S2116
BGA
(1 OF 4)

23	PM_LAN_ENABLE	B12	P10	P60/KIN0*	L13	59	SMC_PM_G2_EN
	SMC_RSTGATE_L	C13	P11	P61/KIN1*	L14	59	SMC_ADAPTER_EN
77 26	ALL_SYS_PWRGD	A15	P12	P62/KIN2*	L15	22	SPI_ARB
76	RSMRST_PWRGD	B14	P13	P63/KIN3*	K12	63 22	SPI_SCLK
23	SMC_SB_NMI	B15	P14	P64/KIN4*	K13	63 22	SPI_SI
23	PM_RSMRST_L	C14	P15	P65/KIN5*	K14	63 22	SPI_SO
75	IMVP_VR_ON	D12	P16	P66/IRQ6*/KIN6*	J12	59	SMC_PROCHOT_3_3_L
23	PM_PWRBTN_L	C15	P17	P67/IRQ7*/KIN7*	J13	59	SMC_CPU_INIT_3_3_L
59	SMC_P20	D13	P20	P70/AN0	N12	76	SMC_CPU_ISENSE
59	SMC_P21	D14	P21	P71/AN1	R13	76	SMC_CPU_VSENSE
59	SMC_P22	D15	P22	P72/AN2	P13	59	SMC_GPU_ISENSE
59	SMC_P23	E12	P23	P73/AN3	R14	59	SMC_GPU_VSENSE
59	SMC_BATT_TRICKLE_EN_L	E14	P24	P74/AN4	P14	76	SMC_DCIN_ISENSE
59	SMC_BATT_CHG_EN	E15	P25	P75/AN5	R15	76	SMC_PBUS_VSENSE
59	SMC_P26	E13	P26	P76/AN6	N13	59	SMC_BATT_ISENSE
59	SMC_P27	F14	P27	P77/AN7	P15	59	SMC_FWIRE_ISENSE
67 60 21	LPC_AD<0>	D9	P30/LAD0	P80/PME*	C7	23	SMC_WAKE_SCI_L
67 60 21	LPC_AD<1>	C9	P31/LAD1	P81/GA20	A7	59	SMC_TPM_GPIO
67 60 21	LPC_AD<2>	A9	P32/LAD2	P82/CLKRUN*	B7	67 60 44 23 5	PM_CLKRUN_L
67 60 21	LPC_AD<3>	B9	P33/LAD3	P83/LPCPD*	D6	67 60 23	PM_SUS_STAT_L
67 60 21	LPC_FRAME_L	D8	P34/LFRAME*	P84/IRQ3*/TXD1	C6	59	SC_TX_L
6	SMC_LRESET_L	C8	P35/LRESET*	P85/IRQ4*/RXD1	A6	59	SC_RX_L
34	PCI_CLK_SMC	A8	P36/LCLK	P86/IRQ5*/SCK1/SCL1	B6	59	SMB_BSB_CLK
67 60 23	INT_SERIRQ	D7	P37/SERIRQ	P90/IRQ2*	K4	59	SMC_ONOFF_L
	SMC_XDP_TMS_L	A5	P40/TMI0	P91/IRQ1*	J2	59	SMC_BC_ACOK
60	SMC_SYS_LED_16B	B5	P41/TMO0	P92/IRQ0*	J1	59	SMC_BS_ALRT_L
59	SMB_BSB_DATA	D5	P42/SDA1	P93/IRQ12*	J3	88 79 77 23 6	PM_SLP_S3_L
59	SMC_TPM_PP	C3	P43/TMI1/EXSCK1	P94/IRQ13*	J4	77 23	PM_SLP_S4_L
	SMC_XDP_TRST_L	B1	P44/TMO1	P95/IRQ14*	H2	23	PM_SLP_S5_L
	SMC_XDP_TCK	C2	P45	P96/EXCL	H1	59	SMC_SUS_CLK
60	SMC_SYS_LED	D3	P46/PWX0/PWM0	P97/IRQ15*/SDA0	G2	59	SMC_SMB_0_DATA
59	SMC_SYS_KBDLED	C1	P47/PWX1/PWM1				
60 59 5	SMC_TX_L	G1	P50				
60 59 5	SMC_RX_L	G4	P51				
59	SMC_SMB_0_CLK	F2	P52/SCL0				

OMIT
U5800
SMC_H8S2116
BGA
(2 OF 4)

21	SMC_RCIN_L	R3	PA0/KIN8*/PA2DC	PE0	M3	59	SMC_CASE_OPEN
60 22	BOOT_LPC_SPI_L	P3	PA1/KIN9*/PA2DD	PE1*/ETCK	M2	60 59 5	SMC_TCK
26 23 5	PM_SYSRST_L	R2	PA2/KIN10*/PS2AC	PE2*/ETDI	M1	60 59 5	SMC_TDI
67 59	SMC_TPM_RESET_L	N3	PA3/KIN11*/PS2AD	PE3*/ETDO	L4	60 59 5	SMC_TDO
59 14	PM_EXTTS_L<0>	R1	PA4/KIN12*/PS2BC	PE4*/ETMS	L2	60 59 5	SMC_TMS
23 10	PM_THRM_L	N2	PA5/KIN13*/PS2BD	PF0/IRQ8*/PWM2	M7		SMC_PF0 59
59	SYS_ONEWIRE	M4	PA6/KIN14*/PS2CC	PF1/IRQ9*/PWM3	P6		SMC_PF1 59
23	PM_BATLOW_L	N1	PA7/KIN15*/PS2CD	PF2/IRQ10*/TMOY	R6	59	SMC_LID
23	SMC_EXTSMI_L	B10	PB0/LSMI*	PF3/IRQ11*/TMOX	N6	59	SMC_CPU_RESET_3_3_L
23	SMC_RUNTIME_SCI_L	A10	PB1/LSCI	PF4/PWM4	M6	59	SMC_BATT_ISET
59	SMC_ODD_DETECT	D10	PB2	PF5/PWM5	R5	59	SMC_BATT_VSET
76	ISENSE_CAL_EN	A11	PB3	PF6/PWM6	P5	59	SMC_SYS_ISET
59	SMC_EXCARD_CP	B11	PB4	PF7/PWM7	N5	59	SMC_SYS_VSET
59	SMC_EXCARD_PWR_EN	C11	PB5	PG0/EXIRQ8*/TMIX	P9	63 22	SPI_CE_L
59	SMC_EXCARD_PWR_OC_L	A12	PB6	PG1/EXIRQ9*/TMIY	R9	59	SMC_XDP_TCK_3_3
59	SMC_XDP_TDO_3_3_L	D11	PB7	PG2/EXIRQ10*/SDA2	N9	59	SMB_BSA_DATA
65	SMC_FAN_0_CTL	G14	PC0/TIOCA0/WUE8*	PG3/EXIRQ11*/SCL2	P8	59	SMB_BSA_CLK
65	SMC_FAN_1_CTL	G15	PC1/TIOCB0/WUE9*	PG4/EXIRQ12*/EXSDAA	R8	59	SMB_A_S3_DATA
66	SMC_FAN_2_CTL	G13	PC2/TIOCC0/TCLKA/WUE10*	PG5/EXIRQ13*/EXSCLA	M8	59	SMB_A_S3_CLK
59	SMC_FAN_3_CTL	G12	PC3/TIOCD0/TCLKB/WUE11*	PG6/EXIRQ14*/EXSDAB	P7	59	SMB_B_S0_DATA
65	SMC_FAN_0_TACH	H14	PC4/TIOCA1/WUE12*	PG7/EXIRQ15*/EXSCLB	R7	59	SMB_B_S0_CLK
65	SMC_FAN_1_TACH	H15	PC5/TIOCB1/TCLKC/WUE13*	PH0/EXIRQ6*	E1	59	SMC_PROCHOT
66	SMC_FAN_2_TACH	H13	PC6/TIOCA2/WUE14*	PH1/EXIRQ7*	F3	59	SMC_THRMTRIP
59	SMC_FAN_3_TACH	H12	PC7/TIOCB2/TCLKD/WUE15*	PH2/FWE	K2	59	SMC_FWE
59	SMS_X_AXIS	M11	PD0/AN8	PH3/EXEXCL	C4	59	ALS_GAIN
59	SMS_Y_AXIS	P11	PD1/AN9	PH4	D4	26 23	SMS_INT_L
59	SMS_Z_AXIS	R11	PD2/AN10	PH5	B3	59	SMS_ONOFF_L
59	SMC_ANALOG_ID	N11	PD3/AN11				
59	SMC_NB_ISENSE	P10	PD4/AN12				
59	SMC_MEM_ISENSE	R10	PD5/AN13				
59	ALS_LEFT	N10	PD6/AN14				
59	ALS_RIGHT	M10	PD7/AN15				

OMIT
U5800
SMC_H8S2116
BGA
(4 OF 4)

G3	NC0	NC12	E15
H3	NC1	NC13	A14
K3	NC2	NC14	C12
L3	NC3	NC15	C10
N4	NC4	NC16	C5
M5	NC5	NC17	A3
N7	NC6	NC18	B8
M12	NC7	NC19	E4
M13	NC8	NC20	H4
L12	NC9	NC21	M9
K15	NC10	NC22	N8
J14	NC11		

59 58 6 =PP3V3_S5_SMC

C5802 22UF 20% 6.3V X5R 805
C5803 0.1UF 20% 10V CERM 402
C5804 0.1UF 20% 10V CERM 402
C5805 0.1UF 20% 10V CERM 402
C5806 0.1UF 20% 10V CERM 402

LAYOUT NOTE:
PLACE C5807 NEAR PIN F1

SMC_VCL
VCL IS INTERNAL RAIL
C5807 0.47UF 10% 6.3V CERM-X5R 402

LAYOUT NOTE:
PLACE R5899 AND C5820 NEAR SMC PIN N14,N15

59 58 6 =PP3V3_S5_SMC
R5899 4.7 5% 1/10W MF-LF 402
PP3V3_AVCC_SMC
MIN_LINE_WIDTH=0.25 MM
MIN_NECK_WIDTH=0.20 MM
C5820 0.1UF 20% 10V CERM 402
85 76 59 58 GND_SMC_AVSS

PP3V3_AVREF_SMC 59
59 58 6 =PP3V3_S5_SMC

OMIT
U5800
SMC_H8S2116
BGA
(3 OF 4)

N14	AVCC		
N15	AVCC		
P2	VCC		
P1	VCC		
J15	VCC		
A1	VCC		
F1	VCL		
M14	AVREF		
M15	AVREF		
60 59 IN	SMC_RST_L	E3	RES*
59	SMC_XTAL	A2	XTAL
59	SMC_EXTAL	B2	EXTAL
		MD1	E2
		MD2	K1
		NMI	F4
		ETRST*	L1
		AVSS	P12
			R12
		VSS	D1
			P4
			R4
			F12
			F13
			B13
			A13
			A4
			B4
			D2

R5809 10K 5% 1/16W MF-LF 402
R5801 10K 5% 1/16W MF-LF 402
KBC_MDE
SMC_MD1 60
SMC_NMI 60 IN
SMC_TRST_L IN
NOSTUFF
R5898 10K 5% 1/16W MF-LF 402
R5803 0 5% 1/16W MF-LF 402
R5802 10K 5% 1/16W MF-LF 402

XW5800
SM
GND_SMC_AVSS 58 59 76 85

SMC

SYNC_MASTER=N/A SYNC_DATE=N/A

NOTICE OF PROPRIETARY PROPERTY

THE INFORMATION CONTAINED HEREIN IS THE PROPRIETARY PROPERTY OF APPLE COMPUTER, INC. THE POSSESSOR AGREES TO THE FOLLOWING

I TO MAINTAIN THE DOCUMENT IN CONFIDENCE
II NOT TO REPRODUCE OR COPY IT
III NOT TO REVEAL OR PUBLISH IN WHOLE OR PART

APPLE COMPUTER INC.

SIZE	DRAWING NUMBER	REV.
D	051-7148	13
SCALE NONE	SHT 58 OF 110	

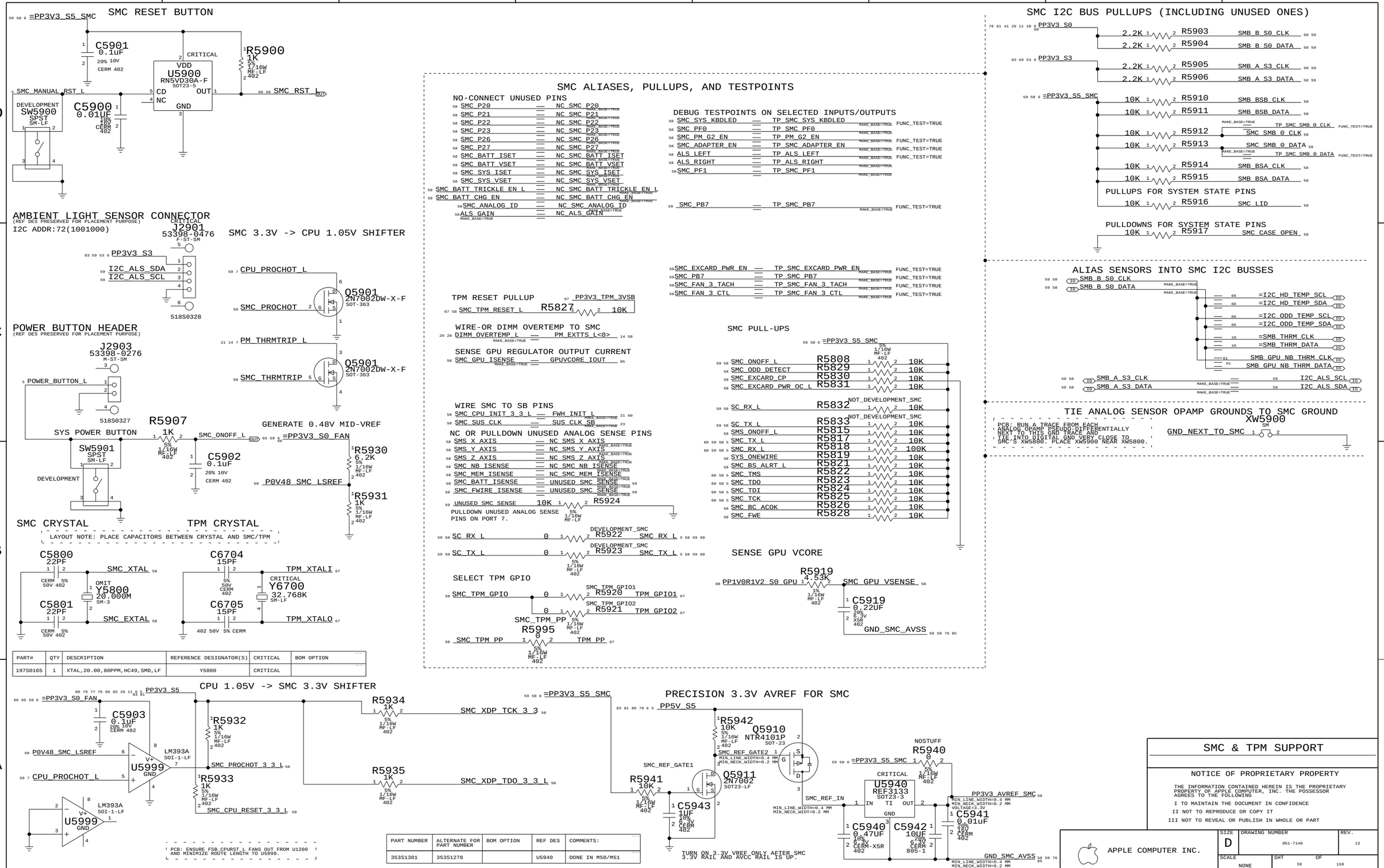

PART#	QTY	DESCRIPTION	REFERENCE DESIGNATOR(S)	CRITICAL	BOM OPTION
197S0165	1	XTAL,20.00,80PPM,HC49,SMD,LF	Y5800	CRITICAL	

PART NUMBER	ALTERNATE FOR PART NUMBER	BOM OPTION	REF DES	COMMENTS:
353S1381	353S1278		U5940	DONE IN M50/M51

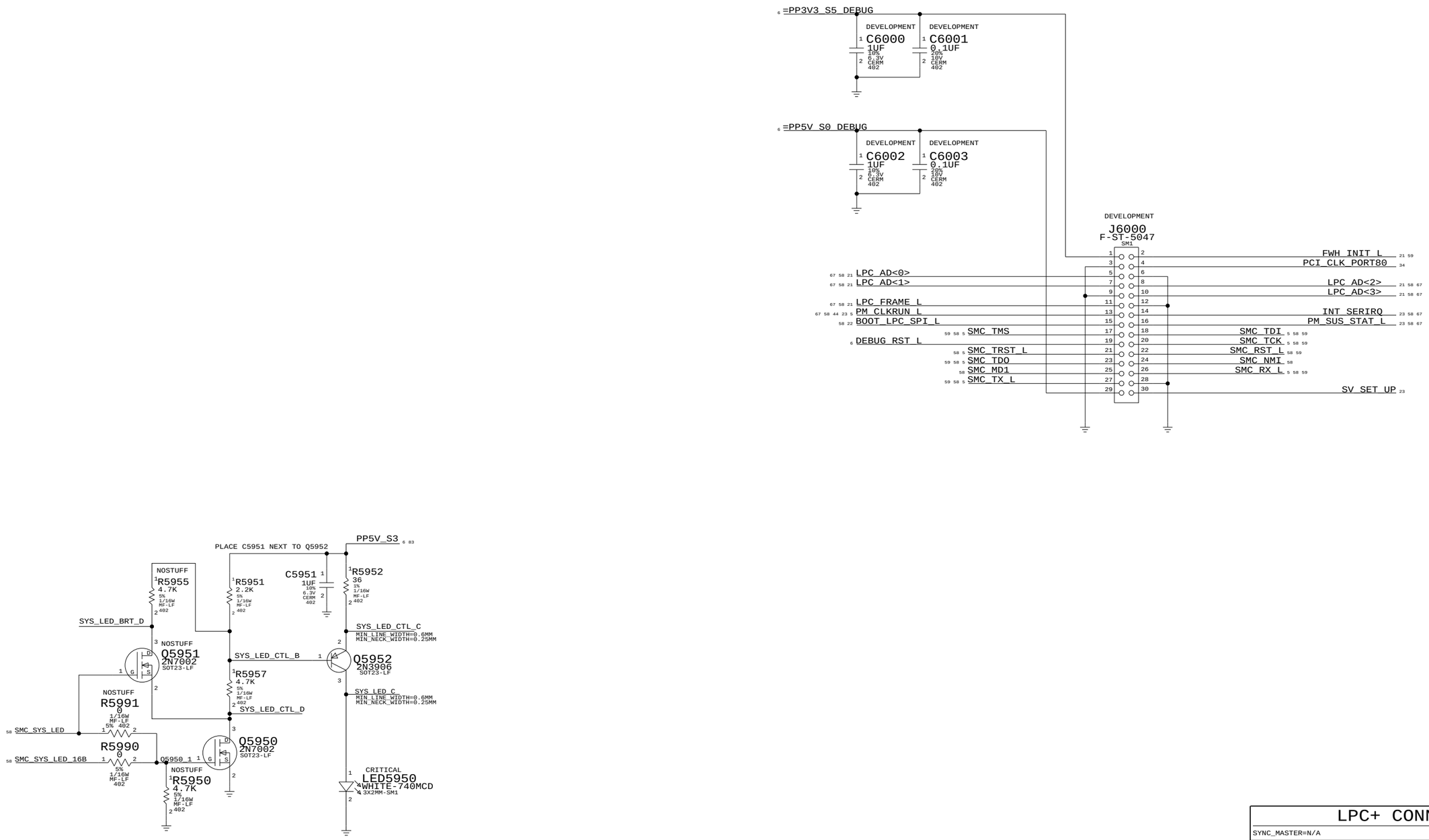

LPC+ CONN

SYNC_MASTER=N/A SYNC_DATE=N/A

NOTICE OF PROPRIETARY PROPERTY

THE INFORMATION CONTAINED HEREIN IS THE PROPRIETARY PROPERTY OF APPLE COMPUTER, INC. THE POSSESSOR AGREES TO THE FOLLOWING

I TO MAINTAIN THE DOCUMENT IN CONFIDENCE

II NOT TO REPRODUCE OR COPY IT

III NOT TO REVEAL OR PUBLISH IN WHOLE OR PART

APPLE COMPUTER INC.

SIZE	DRAWING NUMBER	REV.
D	051-7148	13
SCALE NONE	SHT 60 OF 110	

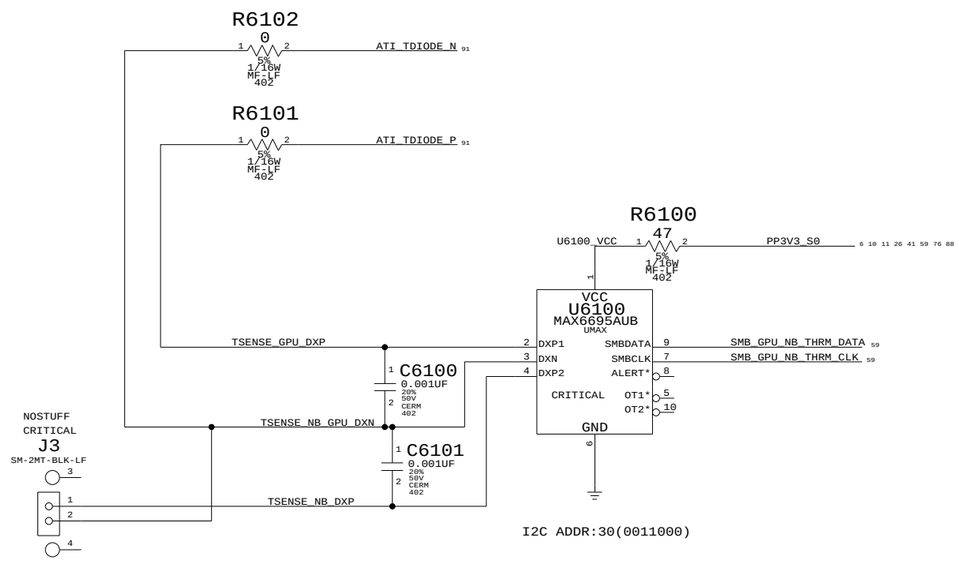

GPU+NB THERMAL

SYNC_MASTER=N/A SYNC_DATE=N/A

NOTICE OF PROPRIETARY PROPERTY

THE INFORMATION CONTAINED HEREIN IS THE PROPRIETARY PROPERTY OF APPLE COMPUTER, INC. THE POSSESSOR AGREES TO THE FOLLOWING

I TO MAINTAIN THE DOCUMENT IN CONFIDENCE

II NOT TO REPRODUCE OR COPY IT

III NOT TO REVEAL OR PUBLISH IN WHOLE OR PART

APPLE COMPUTER INC.

SIZE	DRAWING NUMBER	REV.
D	051-7148	13
SCALE NONE	SHT 61 OF 110	

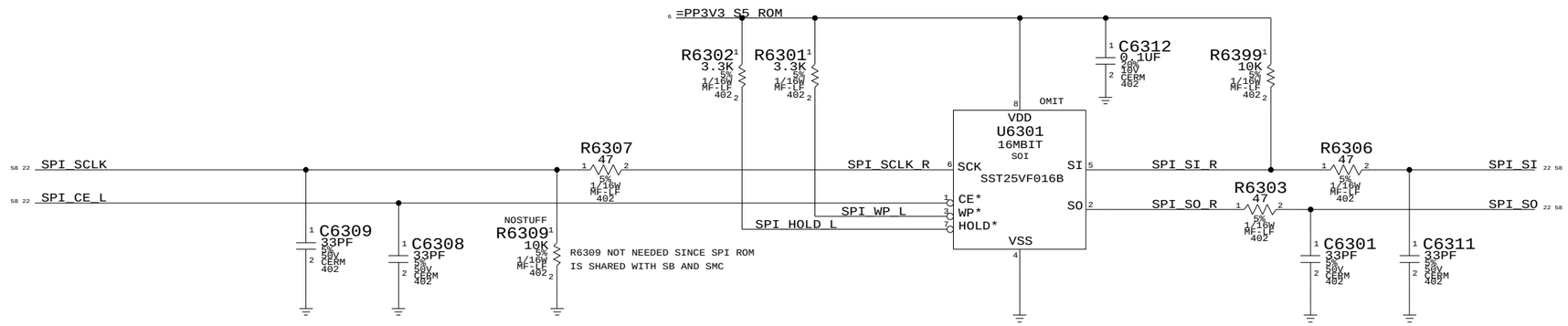

R6306-07 SHOULD BE PLACED LESS THAN 2.54MM FROM U2100

R6303 SHOULD BE PLACED LESS THAN 2.54MM FROM U6301

SPI BOOTROM

SYNC_MASTER=MASTER SYNC_DATE=5/23/05

NOTICE OF PROPRIETARY PROPERTY

THE INFORMATION CONTAINED HEREIN IS THE PROPRIETARY PROPERTY OF APPLE COMPUTER, INC. THE POSSESSOR AGREES TO THE FOLLOWING

I TO MAINTAIN THE DOCUMENT IN CONFIDENCE

II NOT TO REPRODUCE OR COPY IT

III NOT TO REVEAL OR PUBLISH IN WHOLE OR PART

APPLE COMPUTER INC.

SIZE	DRAWING NUMBER	REV.
D	051-7148	13

SCALE NONE

SHT 63 OF 110

FAN 0

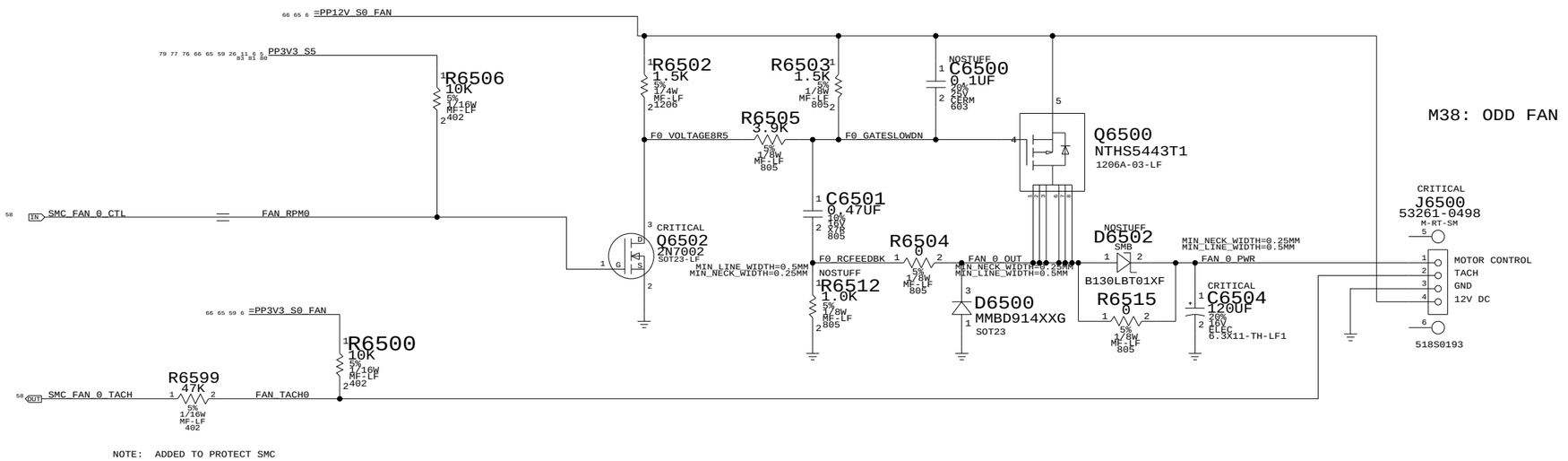

NOTE: ADDED TO PROTECT SMC

FAN 1

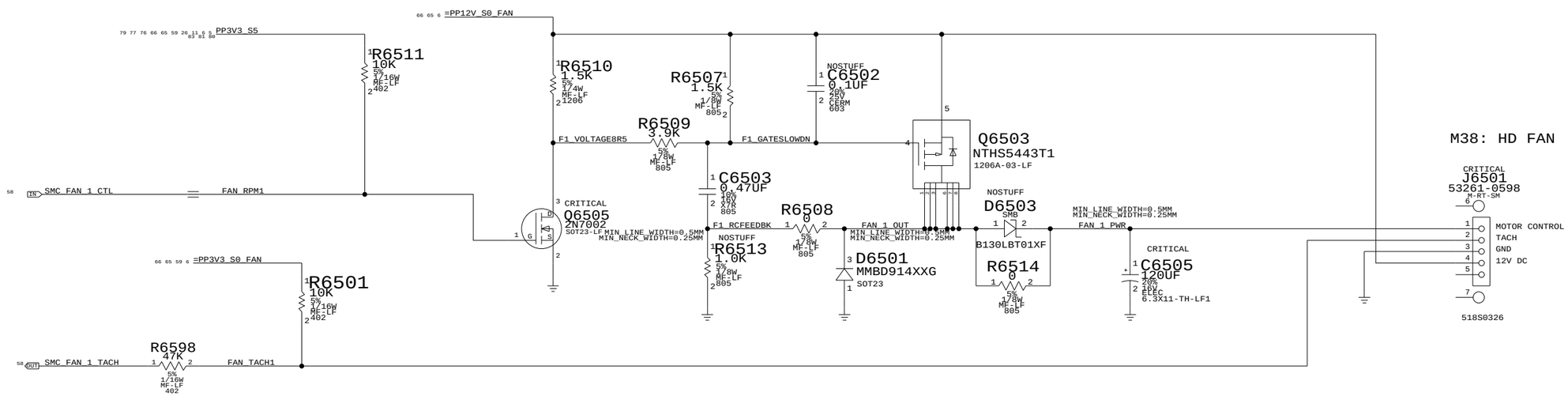

Fan 0, 1 & System Temp

NOTICE OF PROPRIETARY PROPERTY

THE INFORMATION CONTAINED HEREIN IS THE PROPRIETARY PROPERTY OF APPLE COMPUTER, INC. THE POSSESSOR AGREES TO THE FOLLOWING

I TO MAINTAIN THE DOCUMENT IN CONFIDENCE

II NOT TO REPRODUCE OR COPY IT

III NOT TO REVEAL OR PUBLISH IN WHOLE OR PART

APPLE COMPUTER INC.

SIZE	DRAWING NUMBER	REV.
D	051-7148	13
SCALE NONE	SHT 65 OF 110	

FAN 2

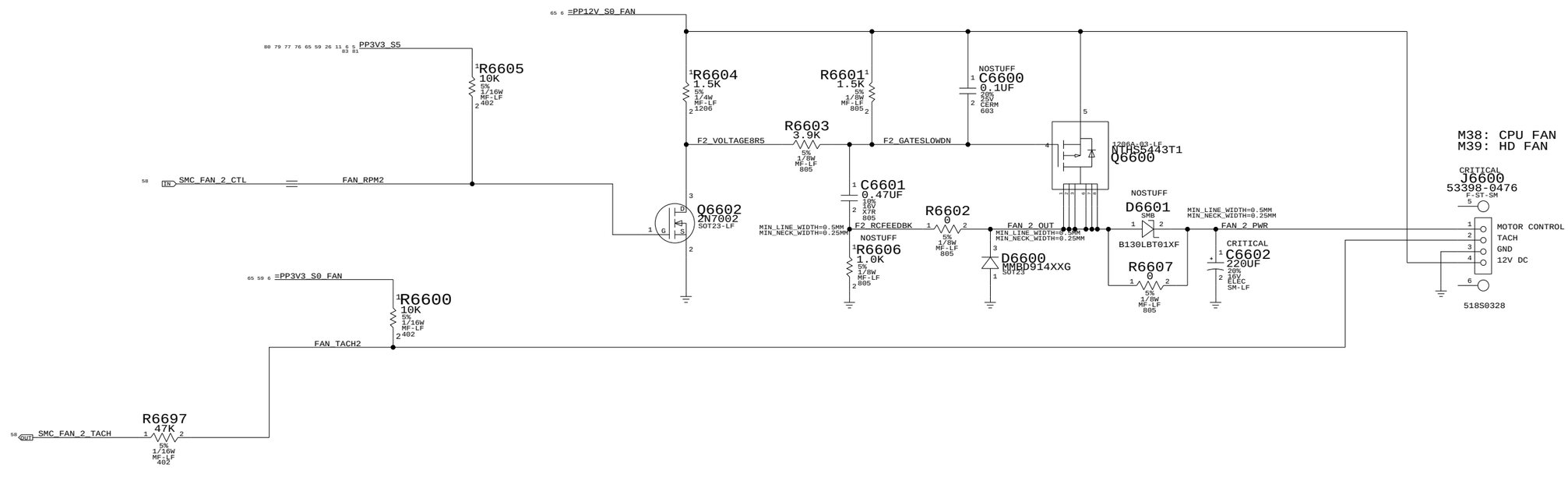

HD TEMP SENSOR

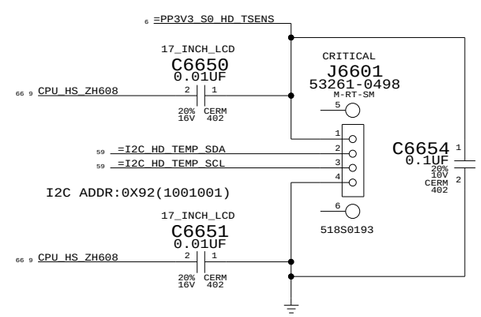

ODD TEMP SENSOR

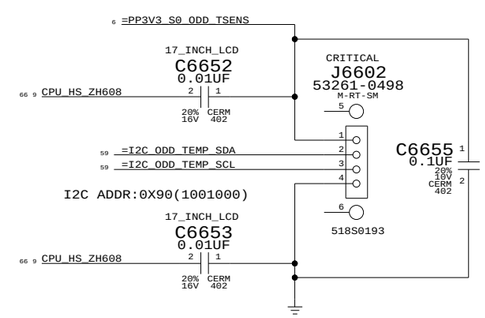

Fan 2 & HD Temp

NOTICE OF PROPRIETARY PROPERTY

THE INFORMATION CONTAINED HEREIN IS THE PROPRIETARY PROPERTY OF APPLE COMPUTER, INC. THE POSSESSOR AGREES TO THE FOLLOWING

I TO MAINTAIN THE DOCUMENT IN CONFIDENCE

II NOT TO REPRODUCE OR COPY IT

III NOT TO REVEAL OR PUBLISH IN WHOLE OR PART

APPLE COMPUTER INC.

SIZE	DRAWING NUMBER	REV.
D	051-7148	13
SCALE NONE	SHT 66 OF 110	

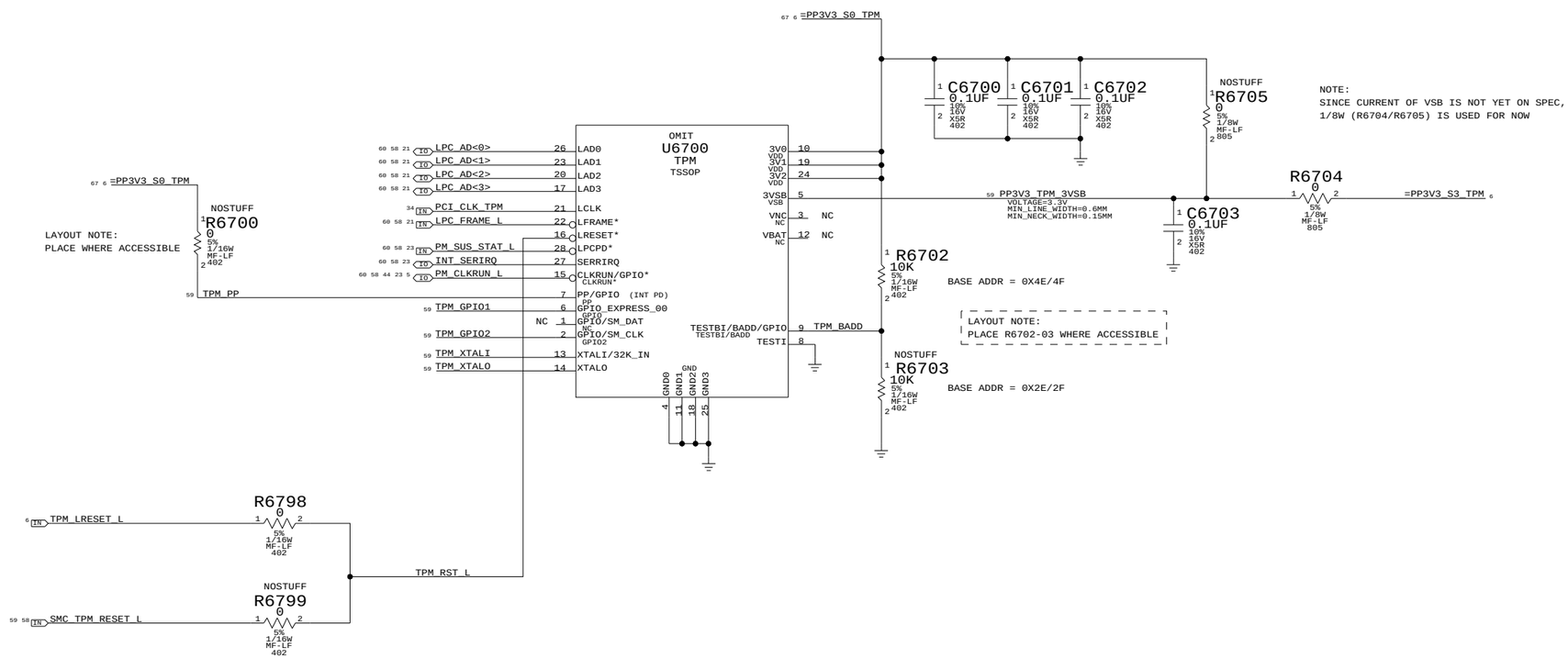

TPM

SYNC_MASTER=N/A SYNC_DATE=N/A

NOTICE OF PROPRIETARY PROPERTY

THE INFORMATION CONTAINED HEREIN IS THE PROPRIETARY PROPERTY OF APPLE COMPUTER, INC. THE POSSESSOR AGREES TO THE FOLLOWING

I TO MAINTAIN THE DOCUMENT IN CONFIDENCE

II NOT TO REPRODUCE OR COPY IT

III NOT TO REVEAL OR PUBLISH IN WHOLE OR PART

APPLE COMPUTER INC.

SIZE	DRAWING NUMBER	REV.
D	051-7148	13
SCALE NONE	SHT 67 OF 110	

AUDIO CODEC
APPLE P/N 353S1458

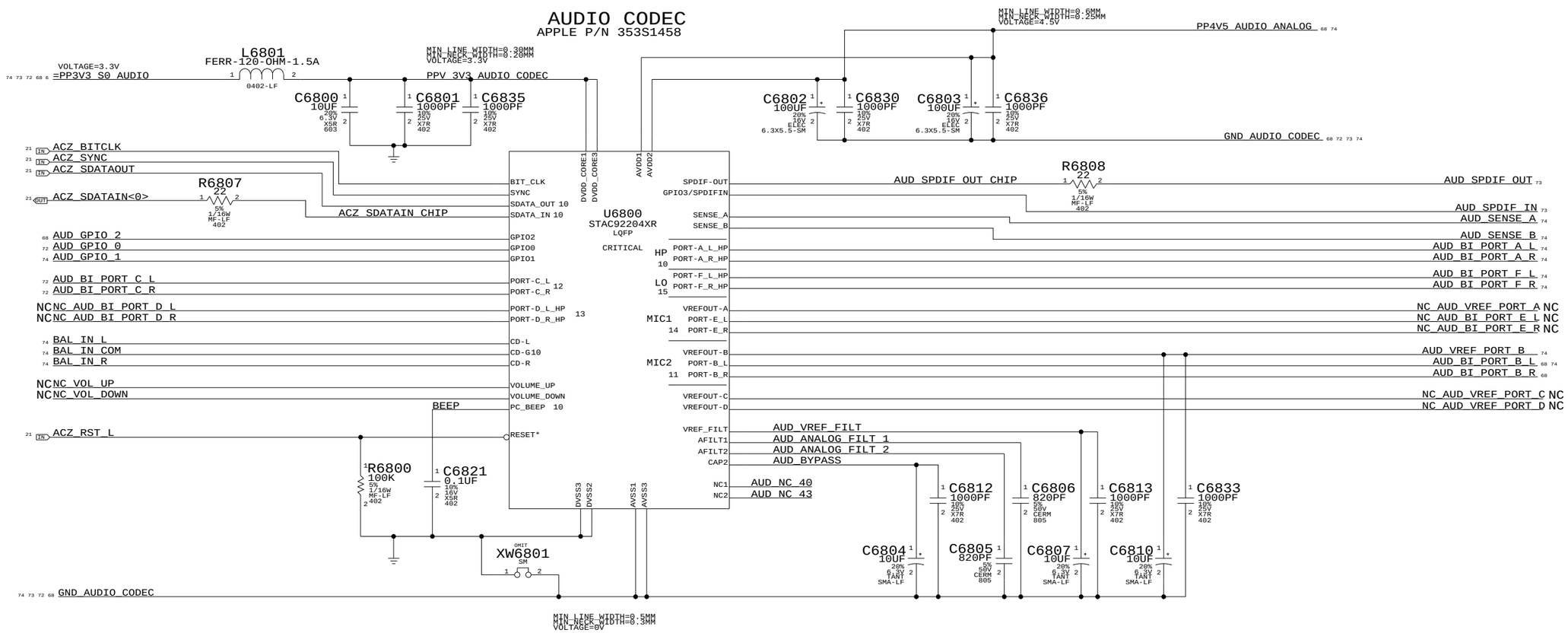

AUD_BI_PORT_B_L = AUD_BI_PORT_B_R

MIC INPUT TO BOTH L&R

AUD_GPIO_2

R6815 10K 5% 1/16W MF-LF 402

4.5V POWER SUPPLY FOR CODEC
APN: 353S1455

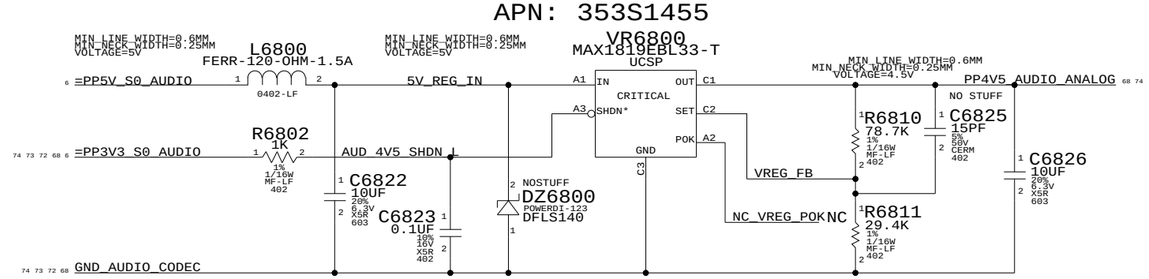

PART NUMBER	ALTERNATE FOR PART NUMBER	BOM OPTION	REF DES	COMMENTS:
126S0091	126S0092		C6802,C6803	FACTORY SHORTAGE
126S0091	126S0092		C7403,C7404	FACTORY SHORTAGE

AUDIO: CODEC

SYNC_MASTER=FINO-SO SYNC_DATE=04/28/2005

NOTICE OF PROPRIETARY PROPERTY

THE INFORMATION CONTAINED HEREIN IS THE PROPRIETARY PROPERTY OF APPLE COMPUTER, INC. THE POSSESSOR AGREES TO THE FOLLOWING

I TO MAINTAIN THE DOCUMENT IN CONFIDENCE

II NOT TO REPRODUCE OR COPY IT

III NOT TO REVEAL OR PUBLISH IN WHOLE OR PART

APPLE COMPUTER INC.

SIZE	DRAWING NUMBER	REV.
D	051-7148	13
SCALE NONE	SHT 68 OF 110	

SPEAKER AMP

APPLE P/N 353S0680

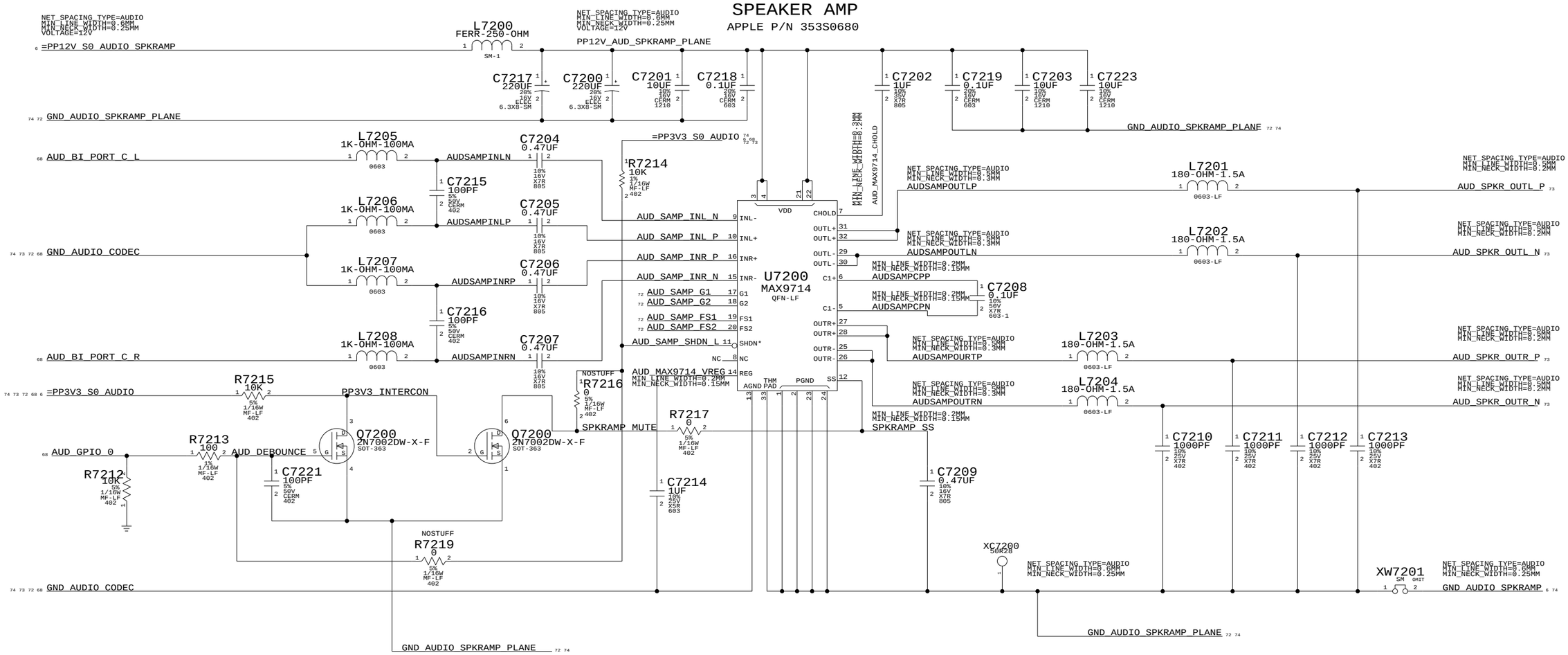

GAIN SETTINGS: +19DB
MODULATION SETTING: LOW EMI
GAIN AND SWITCHING FREQUENCY STUFF OPTIONS

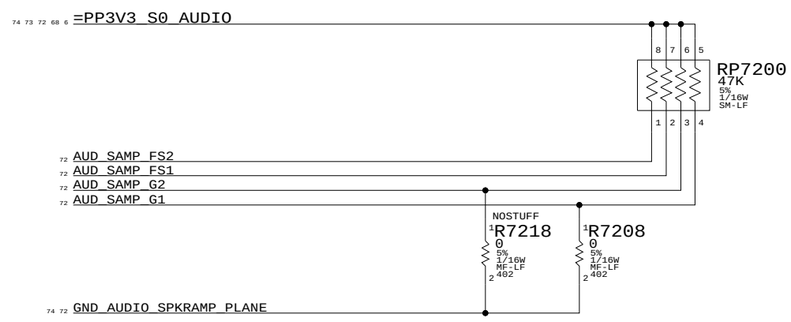

AUDIO: SPEAKER AMP

SYNC_MASTER=FINO-SO SYNC_DATE=04/28/2005

NOTICE OF PROPRIETARY PROPERTY

THE INFORMATION CONTAINED HEREIN IS THE PROPRIETARY PROPERTY OF APPLE COMPUTER, INC. THE POSSESSOR AGREES TO THE FOLLOWING

I TO MAINTAIN THE DOCUMENT IN CONFIDENCE

II NOT TO REPRODUCE OR COPY IT

III NOT TO REVEAL OR PUBLISH IN WHOLE OR PART

APPLE COMPUTER INC.

SIZE	DRAWING NUMBER	REV.
D	051-7148	13
SCALE NONE	SHT 72 OF 110	

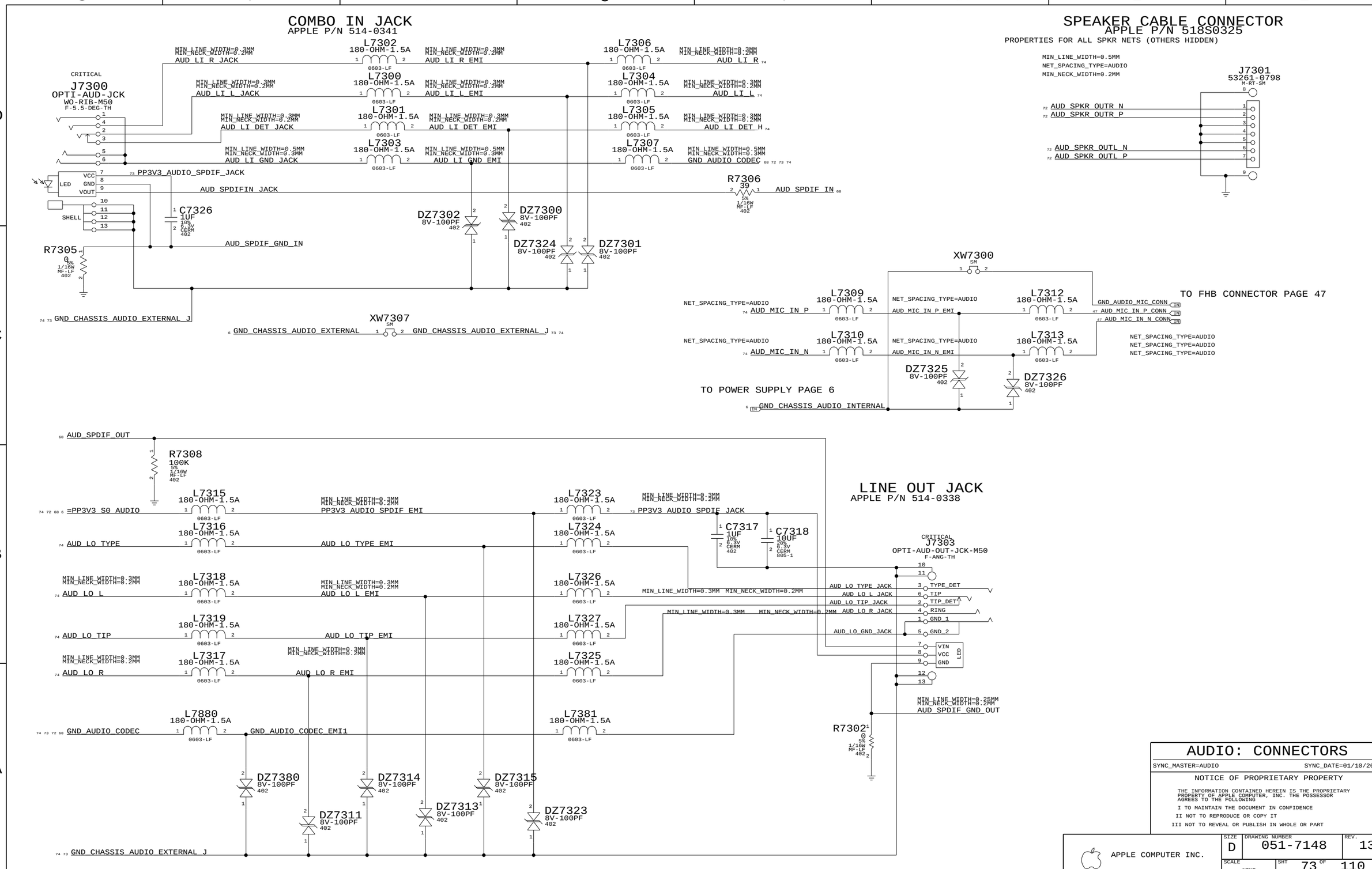

AUDIO: CONNECTORS

SYNC_MASTER=AUDIO SYNC_DATE=01/10/2006

NOTICE OF PROPRIETARY PROPERTY

THE INFORMATION CONTAINED HEREIN IS THE PROPRIETARY PROPERTY OF APPLE COMPUTER, INC. THE POSSESSOR AGREES TO THE FOLLOWING

I TO MAINTAIN THE DOCUMENT IN CONFIDENCE

II NOT TO REPRODUCE OR COPY IT

III NOT TO REVEAL OR PUBLISH IN WHOLE OR PART

APPLE COMPUTER INC.

SIZE	DRAWING NUMBER	REV.
D	051-7148	13
SCALE NONE	SHT 73 OF 110	

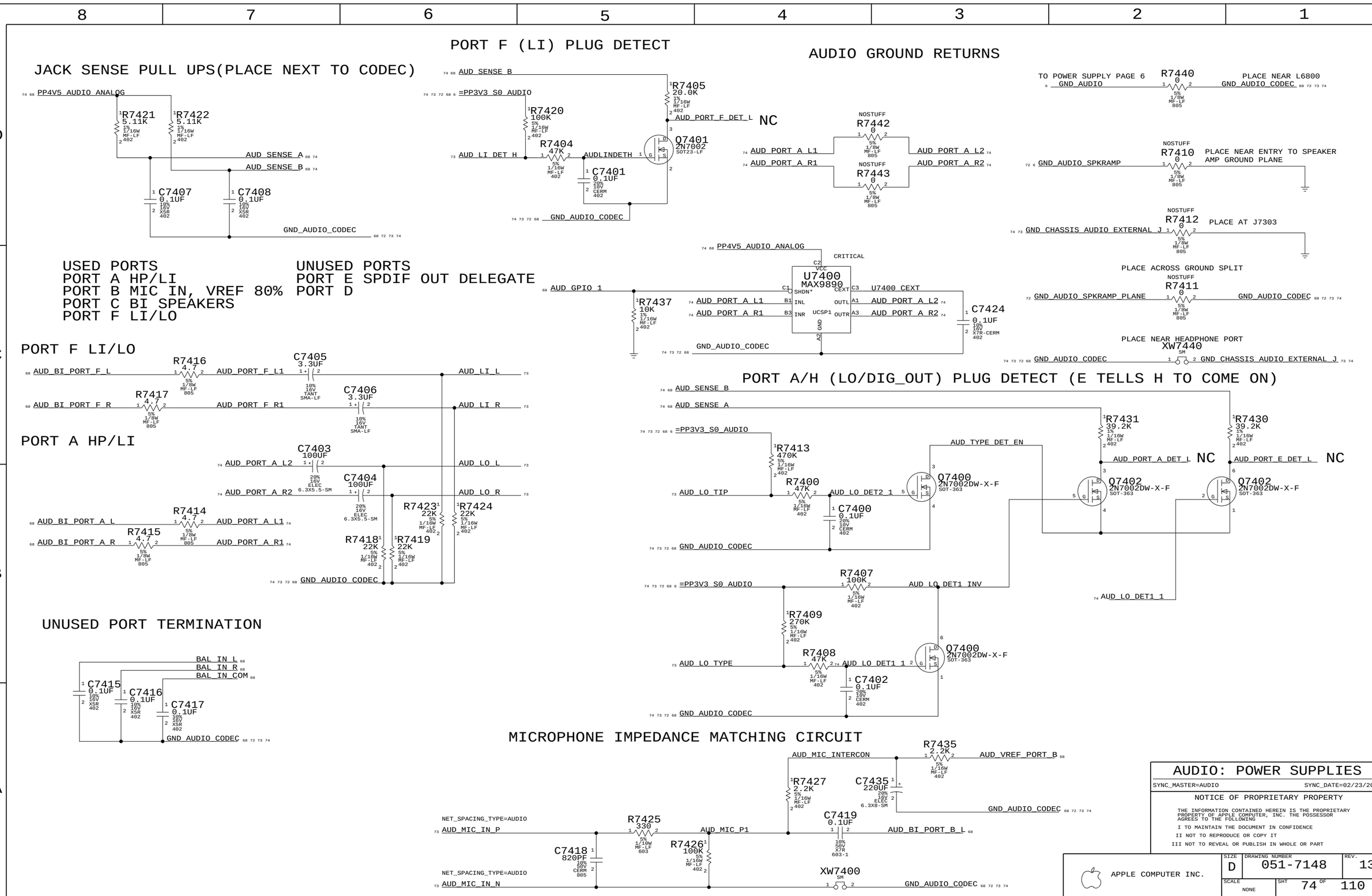
JACK SENSE PULL UPS(PLACE NEXT TO CODEC)
PP4V5_AUDIO_ANALOG
R7421 5.11K
R7422 5.11K
AUD_SENSE_A
AUD_SENSE_B
C7407 0.1UF
C7408 0.1UF
GND_AUDIO_CODEC
PORT F (LI) PLUG DETECT
AUD_SENSE_B
=PP3V3_S0_AUDIO
R7405 20.0K
R7420 100K
AUD_PORT_F_DET_L
NC
Q7401 2N7002
R7404 47K
AUD_LI_DET_H
AUDLINDETH
C7401 0.1UF
GND_AUDIO_CODEC
AUDIO GROUND RETURNS
TO POWER SUPPLY PAGE 6
GND_AUDIO
R7440 0
PLACE NEAR L6800
GND_AUDIO_CODEC
NOSTUFF
R7442 0
AUD_PORT_A_L1
AUD_PORT_A_L2
AUD_PORT_A_R1
AUD_PORT_A_R2
R7443 0
GND_AUDIO_SPKRAMP
R7410 0
PLACE NEAR ENTRY TO SPEAKER AMP GROUND PLANE
GND_CHASSIS_AUDIO_EXTERNAL_J
R7412 0
PLACE AT J7303
PLACE ACROSS GROUND SPLIT
GND_AUDIO_SPKRAMP_PLANE
R7411 0
PLACE NEAR HEADPHONE PORT
XW7440
USED PORTS
PORT A HP/LI
PORT B MIC IN, VREF 80%
PORT C BI SPEAKERS
PORT F LI/LO
UNUSED PORTS
PORT E SPDIF OUT DELEGATE
PORT D
CRITICAL
U7400 MAX9890
AUD_GPIO_1
R7437 10K
C7424 0.1UF
U7400_CEXT
PORT F LI/LO
AUD_BI_PORT_F_L
R7416 4.7
AUD_PORT_F_L1
C7405 3.3UF
AUD_LI_L
AUD_BI_PORT_F_R
R7417 4.7
AUD_PORT_F_R1
C7406 3.3UF
AUD_LI_R
PORT A HP/LI
C7403 100UF
AUD_PORT_A_L2
AUD_LO_L
C7404 100UF
AUD_PORT_A_R2
AUD_LO_R
AUD_BI_PORT_A_L
R7414 4.7
AUD_PORT_A_L1
AUD_BI_PORT_A_R
R7415 4.7
AUD_PORT_A_R1
R7423 22K
R7424 22K
R7418 22K
R7419 22K
GND_AUDIO_CODEC
PORT A/H (LO/DIG_OUT) PLUG DETECT (E TELLS H TO COME ON)
AUD_SENSE_B
AUD_SENSE_A
=PP3V3_S0_AUDIO
R7413 470K
AUD_TYPE_DET_EN
R7431 39.2K
R7430 39.2K
AUD_PORT_A_DET_L
NC
AUD_PORT_E_DET_L
NC
Q7400 2N7002DW-X-F
Q7402 2N7002DW-X-F
AUD_LO_TIP
R7400 47K
AUD_LO_DET2_1
C7400 0.1UF
GND_AUDIO_CODEC
R7407 100K
AUD_LO_DET1_INV
AUD_LO_DET1_1
R7409 270K
AUD_LO_TYPE
R7408 47K
AUD_LO_DET1_1
C7402 0.1UF
UNUSED PORT TERMINATION
BAL_IN_L
BAL_IN_R
BAL_IN_COM
C7415 0.1UF
C7416 0.1UF
C7417 0.1UF
GND_AUDIO_CODEC
MICROPHONE IMPEDANCE MATCHING CIRCUIT
AUD_MIC_INTERCON
R7435 2.2K
AUD_VREF_PORT_B
R7427 2.2K
C7435 220UF
GND_AUDIO_CODEC
NET_SPACING_TYPE=AUDIO
AUD_MIC_IN_P
R7425 330
AUD_MIC_P1
C7419 0.1UF
AUD_BI_PORT_B_L
C7418 820PF
R7426 100K
XW7400
AUD_MIC_IN_N
GND_AUDIO_CODEC
AUDIO: POWER SUPPLIES
SYNC_MASTER=AUDIO
SYNC_DATE=02/23/2006
NOTICE OF PROPRIETARY PROPERTY
THE INFORMATION CONTAINED HEREIN IS THE PROPRIETARY PROPERTY OF APPLE COMPUTER, INC. THE POSSESSOR AGREES TO THE FOLLOWING
I TO MAINTAIN THE DOCUMENT IN CONFIDENCE
II NOT TO REPRODUCE OR COPY IT
III NOT TO REVEAL OR PUBLISH IN WHOLE OR PART
APPLE COMPUTER INC.
SIZE D
DRAWING NUMBER 051-7148
REV. 13
SCALE NONE
SHT 74 OF 110

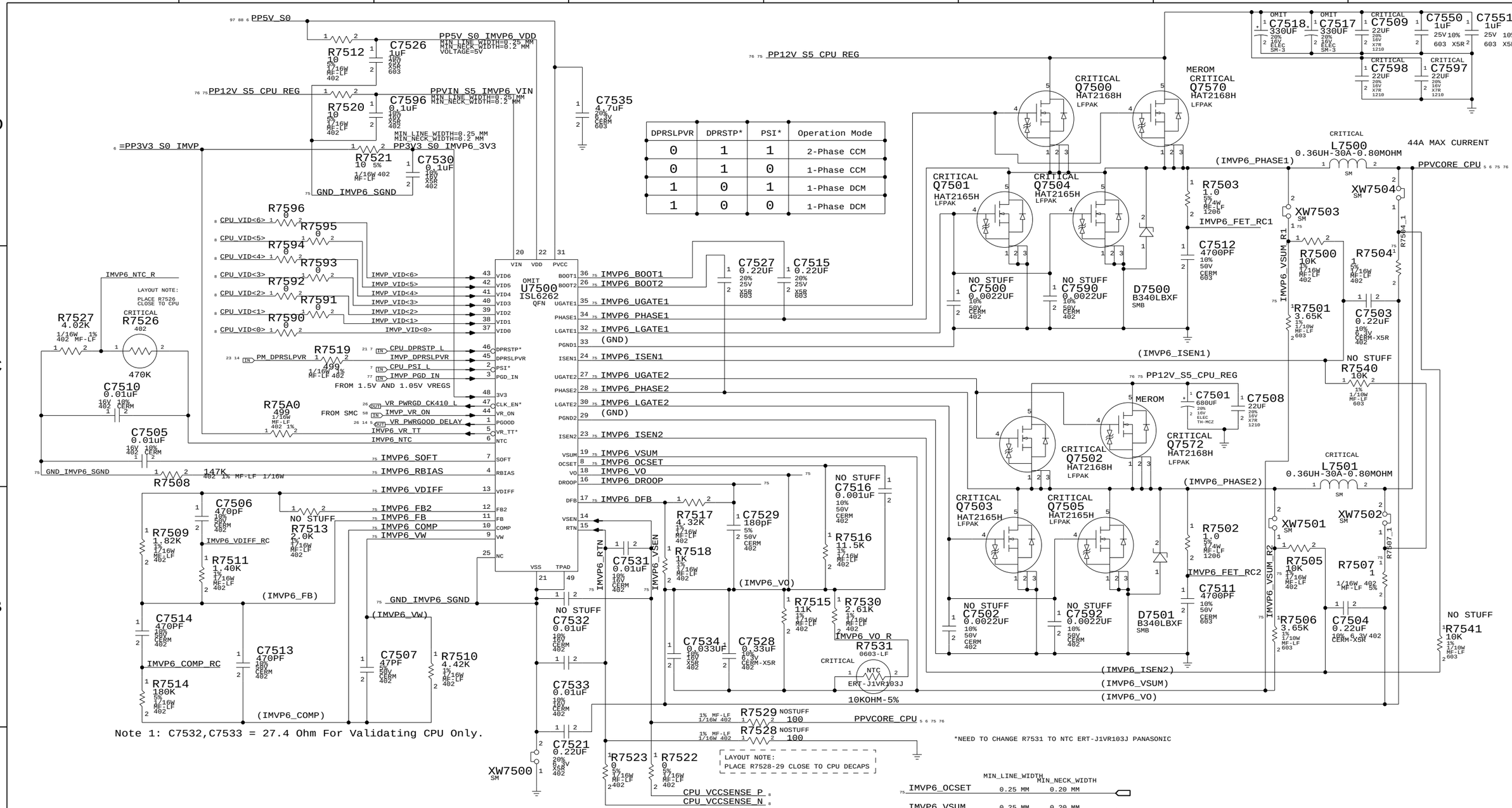

DPRSLPVR	DPRSTP*	PSI*	Operation Mode
0	1	1	2-Phase CCM
0	1	0	1-Phase CCM
1	0	1	1-Phase DCM
1	0	0	1-Phase DCM

Note 1: C7532,C7533 = 27.4 Ohm For Validating CPU Only.

*NEED TO CHANGE R7531 TO NTC ERT-J1VR103J PANASONIC

CPU_VCCSENSE_P & N ARE DIFF PAIRS
ROUTE AS 10MIL WIDE, 7MIL SPACE

IMVP6 CPU VCORE REGULATOR

	MIN_LINE_WIDTH	MIN_NECK_WIDTH
IMVP6_PHASE1	1.5 MM	0.25 MM
IMVP6_BOOT1	0.25 MM	0.25 MM
IMVP6_UGATE1	1.5 MM	0.25 MM
IMVP6_LGATE1	1.5 MM	0.25 MM
IMVP6_ISEN1	0.25 MM	0.25 MM
IMVP6_FET_RC1	0.25 MM	0.25 MM
IMVP6_VSUM_R1	0.25 MM	0.25 MM
R7504_1	0.25 MM	0.25 MM

	MIN_LINE_WIDTH	MIN_NECK_WIDTH
IMVP6_PHASE2	0.25 MM	0.25 MM
IMVP6_BOOT2	0.25 MM	0.25 MM
IMVP6_UGATE2	0.25 MM	0.25 MM
IMVP6_LGATE2	0.25 MM	0.25 MM
IMVP6_ISEN2	0.25 MM	0.25 MM
IMVP6_FET_RC2	0.25 MM	0.25 MM
IMVP6_VSUM_R2	0.60 MM	0.25 MM
R7507_1	0.25 MM	0.25 MM

	MIN_LINE_WIDTH	MIN_NECK_WIDTH
IMVP6_OCSET	0.25 MM	0.20 MM
IMVP6_VSUM	0.25 MM	0.20 MM
GND_IMVP6_SGND	0.50 MM	0.20 MM
IMVP6_VO	0.25 MM	0.20 MM
IMVP6_DROOP	0.25 MM	0.20 MM
IMVP6_DFB	0.25 MM	0.20 MM
IMVP6_SOFT	0.25 MM	0.20 MM
IMVP6_RBIAS	0.25 MM	0.20 MM
IMVP6_VDIFF	0.25 MM	0.20 MM
IMVP6_FB2	0.25 MM	0.20 MM
IMVP6_FB	0.25 MM	0.20 MM
IMVP6_COMP	0.25 MM	0.20 MM
IMVP6_VW	0.25 MM	0.25 MM
IMVP6_RTN	0.25 MM	0.25 MM
IMVP6_VSEN	0.25 MM	0.25 MM

IMVP6 CPU VCore Regulator

SYNC_MASTER=POWER SYNC_DATE=07/08/2005

NOTICE OF PROPRIETARY PROPERTY

THE INFORMATION CONTAINED HEREIN IS THE PROPRIETARY PROPERTY OF APPLE COMPUTER, INC. THE POSSESSOR AGREES TO THE FOLLOWING

I TO MAINTAIN THE DOCUMENT IN CONFIDENCE
II NOT TO REPRODUCE OR COPY IT
III NOT TO REVEAL OR PUBLISH IN WHOLE OR PART

APPLE COMPUTER INC.

SIZE	DRAWING NUMBER	REV.
D	051-7148	13

SCALE NONE SHT 75 OF 110

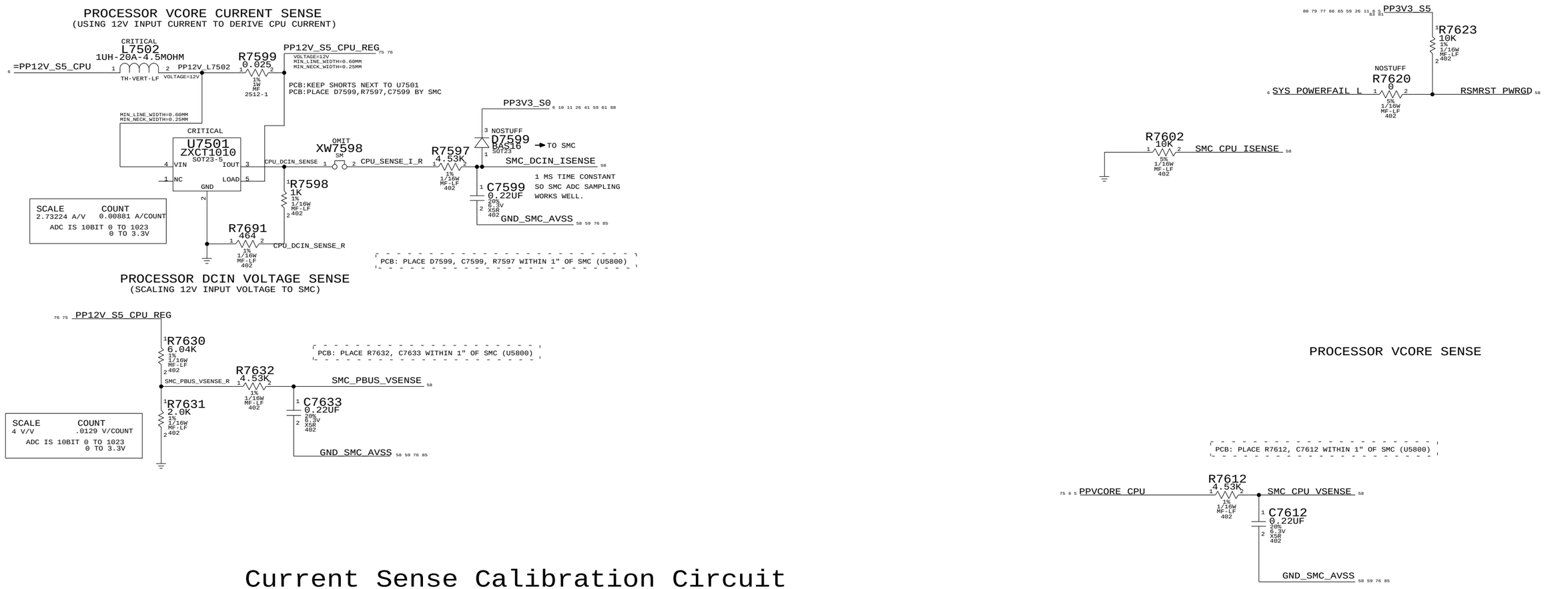

Current Sense Calibration Circuit

Switches in fixed load on power supplies to calibrate current sense circuits

CPU SENSE CIRCUITRIES

SYNC_MASTER=(MASTER) SYNC_DATE=(MASTER)

NOTICE OF PROPRIETARY PROPERTY

THE INFORMATION CONTAINED HEREIN IS THE PROPRIETARY PROPERTY OF APPLE COMPUTER, INC. THE POSSESSOR AGREES TO THE FOLLOWING

I TO MAINTAIN THE DOCUMENT IN CONFIDENCE

II NOT TO REPRODUCE OR COPY IT

III NOT TO REVEAL OR PUBLISH IN WHOLE OR PART

APPLE COMPUTER INC.

SIZE	DRAWING NUMBER	REV.
D	051-7148	13
SCALE NONE	SHT 76 OF 110	

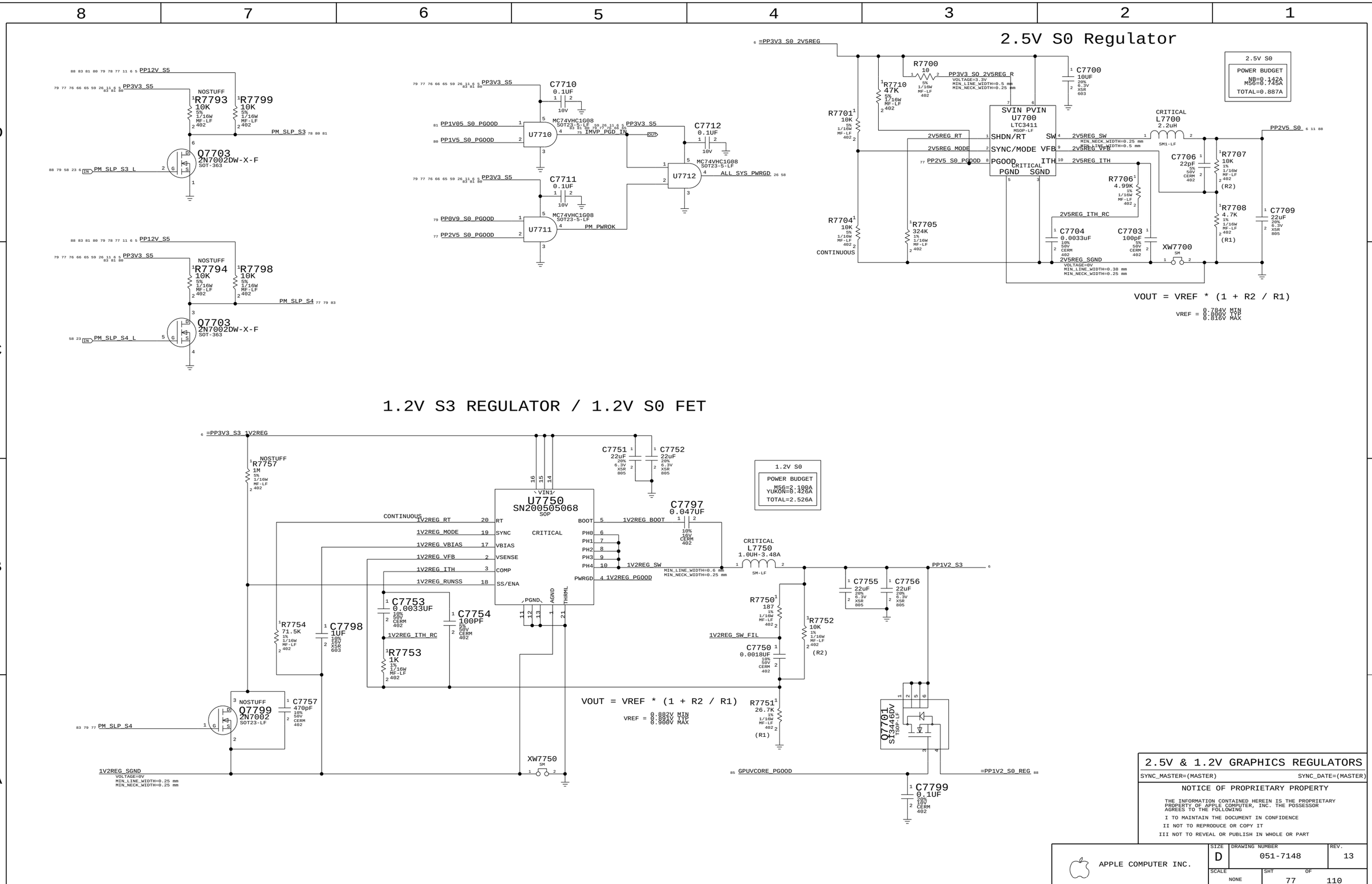
2.5V S0 Regulator
PP12V_S5
PP3V3_S5
NOSTUFF
R7793 10K 5% 1/16W MF-LF 402
R7799 10K 5% 1/16W MF-LF 402
PM_SLP_S3
Q7703 2N7002DW-X-F SOT-363
PM_SLP_S3_L
R7794 10K 5% 1/16W MF-LF 402
R7798 10K 5% 1/16W MF-LF 402
PM_SLP_S4
PM_SLP_S4_L
C7710 0.1UF 10V
C7711 0.1UF 10V
C7712 0.1UF 10V
U7710
U7711
U7712
MC74VHC1G08 SOT23-5-LF
PP1V05_S0_PGOOD
PP0V9_S0_PGOOD
PP2V5_S0_PGOOD
IMVP_PGD_IN
PM_PWROK
ALL_SYS_PWRGD
=PP3V3_S0_2V5REG
R7700 10 5% 1/16W MF-LF 402
PP3V3_S0_2V5REG_R
VOLTAGE=3.3V
MIN_LINE_WIDTH=0.5 mm
MIN_NECK_WIDTH=0.25 mm
C7700 10UF 20% 6.3V X5R 603
R7710 47K 5% 1/16W MF-LF 402
R7701 10K 5% 1/16W MF-LF 402
CONTINUOUS
R7704 10K 5% 1/16W MF-LF 402
R7705 324K 1% 1/16W MF-LF 402
SVIN PVIN
U7700
LTC3411
MSOP-LF
SHDN/RT
SYNC/MODE
PGOOD
PGND SGND
SW
VFB
ITH
CRITICAL
2V5REG_RT
2V5REG_MODE
PP2V5_S0_PGOOD
2V5REG_SW
2V5REG_VFB
2V5REG_ITH
MIN_NECK_WIDTH=0.25 mm
MIN_LINE_WIDTH=0.5 mm
CRITICAL
L7700 2.2uH
SM1-LF
PP2V5_S0
C7706 22pF 5% 50V CERM 402
R7707 10K 1% 1/16W MF-LF 402 (R2)
R7708 4.7K 1% 1/16W MF-LF 402 (R1)
C7709 22uF 20% 6.3V X5R 805
R7706 4.99K 1% 1/16W MF-LF 402
2V5REG_ITH_RC
C7704 0.0033uF 10% 50V CERM 402
C7703 100pF 5% 50V CERM 402
XW7700 SM
2V5REG_SGND
VOLTAGE=0V
MIN_LINE_WIDTH=0.38 mm
MIN_NECK_WIDTH=0.25 mm
2.5V S0
POWER BUDGET
NB=0.142A
M56=0.745A
TOTAL=0.887A
VOUT = VREF * (1 + R2 / R1)
VREF = 0.784V MIN
0.800V TYP
0.816V MAX
1.2V S3 REGULATOR / 1.2V S0 FET
=PP3V3_S3_1V2REG
NOSTUFF
R7757 1M 5% 1/16W MF-LF 402
C7751 22uF 20% 6.3V X5R 805
C7752 22uF 20% 6.3V X5R 805
U7750
SN200505068
SOP
VIN1
CONTINUOUS
1V2REG_RT
1V2REG_MODE
1V2REG_VBIAS
1V2REG_VFB
1V2REG_ITH
1V2REG_RUNSS
RT
SYNC
VBIAS
VSENSE
COMP
SS/ENA
CRITICAL
BOOT
PH0
PH1
PH2
PH3
PH4
PWRGD
1V2REG_PGOOD
PGND
AGND
THRML
C7797 0.047UF 10% 16V CERM 402
1V2REG_BOOT
1V2REG_SW
CRITICAL
L7750 1.0UH-3.48A
SM-LF
MIN_LINE_WIDTH=0.6 mm
MIN_NECK_WIDTH=0.25 mm
PP1V2_S3
C7755 22uF 20% 6.3V X5R 805
C7756 22uF 20% 6.3V X5R 805
R7754 71.5K 1% 1/16W MF-LF 402
C7798 1UF 10% 16V X5R 603
C7753 0.0033UF 10% 50V CERM 402
C7754 100PF 5% 50V CERM 402
1V2REG_ITH_RC
R7753 1K 1% 1/16W MF-LF 402
R7750 187 1% 1/16W MF-LF 402
R7752 10K 1% 1/16W MF-LF 402 (R2)
1V2REG_SW_FIL
C7750 0.0018UF 10% 50V CERM 402
R7751 26.7K 1% 1/16W MF-LF 402 (R1)
VOUT = VREF * (1 + R2 / R1)
VREF = 0.882V MIN
0.891V TYP
0.900V MAX
1.2V S0
POWER BUDGET
M56=2.100A
YUKON=0.426A
TOTAL=2.526A
Q7701 SI3446DV TSOP-LF
NOSTUFF
Q7799 2N7002 SOT23-LF
C7757 470pF 10% 50V CERM 402
PM_SLP_S4
1V2REG_SGND
VOLTAGE=0V
MIN_LINE_WIDTH=0.25 mm
MIN_NECK_WIDTH=0.25 mm
XW7750 SM
GPUVCORE_PGOOD
=PP1V2_S0_REG
C7799 0.1UF 20% 10V CERM 402
2.5V & 1.2V GRAPHICS REGULATORS
SYNC_MASTER=(MASTER)
SYNC_DATE=(MASTER)
NOTICE OF PROPRIETARY PROPERTY
THE INFORMATION CONTAINED HEREIN IS THE PROPRIETARY PROPERTY OF APPLE COMPUTER, INC. THE POSSESSOR AGREES TO THE FOLLOWING
I TO MAINTAIN THE DOCUMENT IN CONFIDENCE
II NOT TO REPRODUCE OR COPY IT
III NOT TO REVEAL OR PUBLISH IN WHOLE OR PART
APPLE COMPUTER INC.
SIZE D
DRAWING NUMBER 051-7148
REV. 13
SCALE NONE
SHT 77 OF 110

PART#	QTY	DESCRIPTION	REFERENCE DESIGNATOR(S)	CRITICAL	BOM OPTION
114S0514	1	5.11 OHM 0402 1% 1/16W LF	R7840		

1.8V S0 REGULATOR

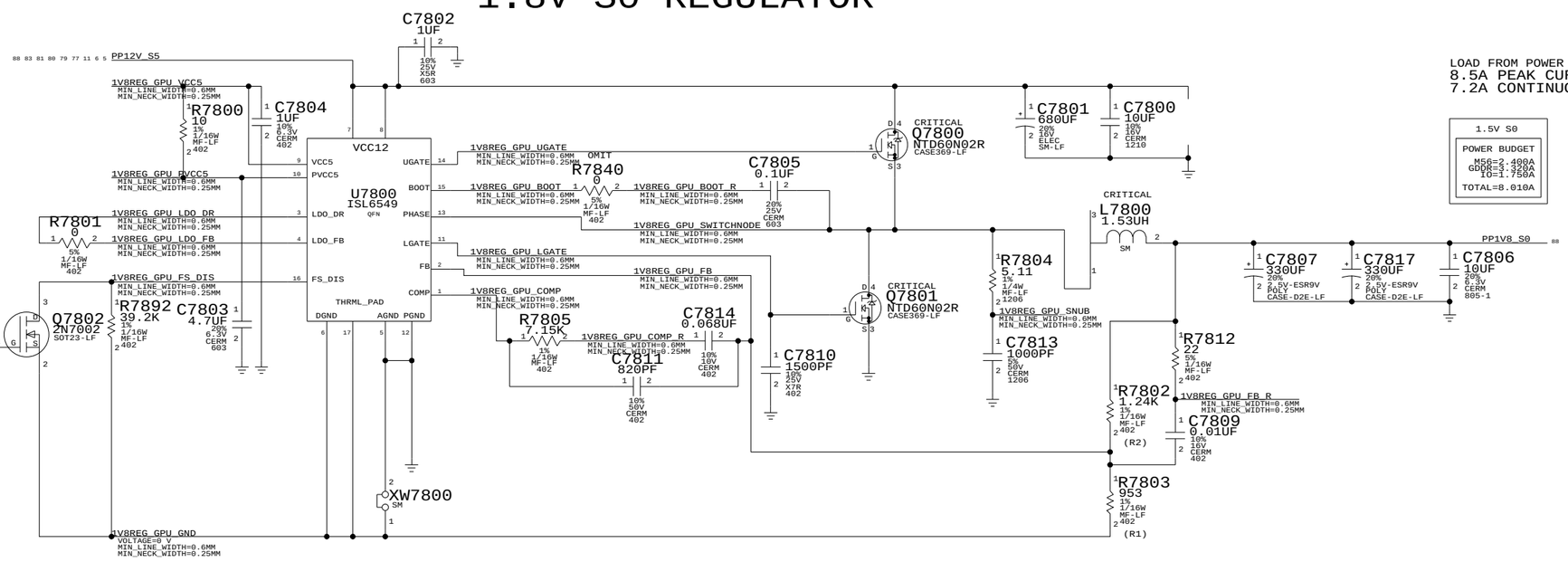

LOAD FROM POWER BUDGET
8.5A PEAK CURRENT DRAW
7.2A CONTINUOUS CURRENT DRAW

1.5V S0
POWER BUDGET
M56=2.400A
GDDR=3.960A
IO=1.750A
TOTAL=8.010A

VOUT=VREF*(1+R2/R1)

VREF = 0.784V MIN
0.800V TYP
0.816V MAX

1.8V GDDR REGULATOR

SYNC_MASTER=(MASTER) SYNC_DATE=(MASTER)

NOTICE OF PROPRIETARY PROPERTY

THE INFORMATION CONTAINED HEREIN IS THE PROPRIETARY PROPERTY OF APPLE COMPUTER, INC. THE POSSESSOR AGREES TO THE FOLLOWING

I TO MAINTAIN THE DOCUMENT IN CONFIDENCE

II NOT TO REPRODUCE OR COPY IT

III NOT TO REVEAL OR PUBLISH IN WHOLE OR PART

APPLE COMPUTER INC.

SIZE	DRAWING NUMBER	REV.
D	051-7148	13
SCALE NONE	SHT 78 OF 110	

TRUE

1.8V S3 REGULATOR

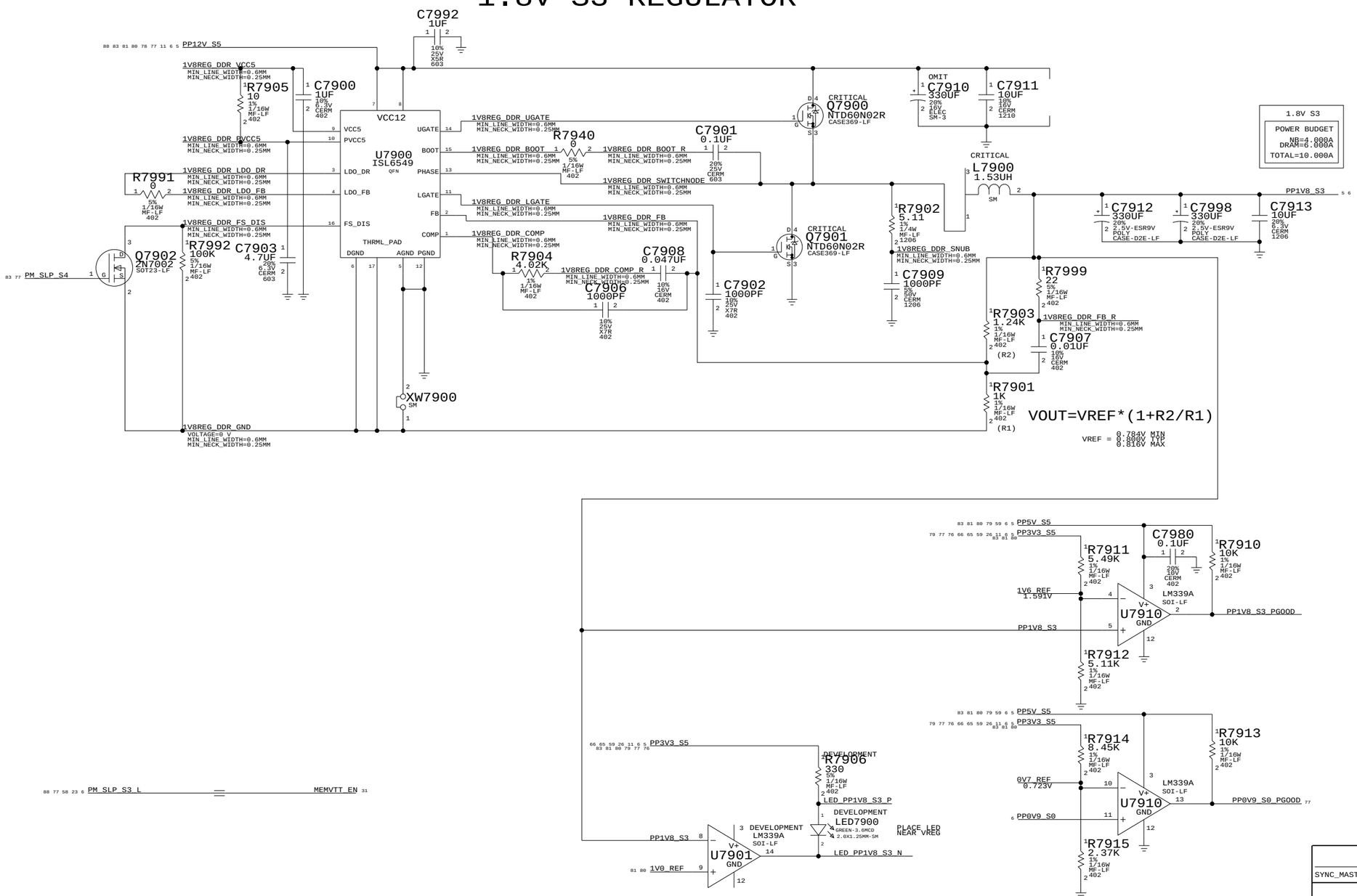

1.8V Vreg

SYNC_MASTER=M23-PC SYNC_DATE=04/12/2005

NOTICE OF PROPRIETARY PROPERTY

THE INFORMATION CONTAINED HEREIN IS THE PROPRIETARY PROPERTY OF APPLE COMPUTER, INC. THE POSSESSOR AGREES TO THE FOLLOWING

I TO MAINTAIN THE DOCUMENT IN CONFIDENCE

II NOT TO REPRODUCE OR COPY IT

III NOT TO REVEAL OR PUBLISH IN WHOLE OR PART

APPLE COMPUTER INC.

SIZE	DRAWING NUMBER	REV.
D	051-7148	13
SCALE NONE	SHT 79 OF 110	

1.5V S0 REGULATOR

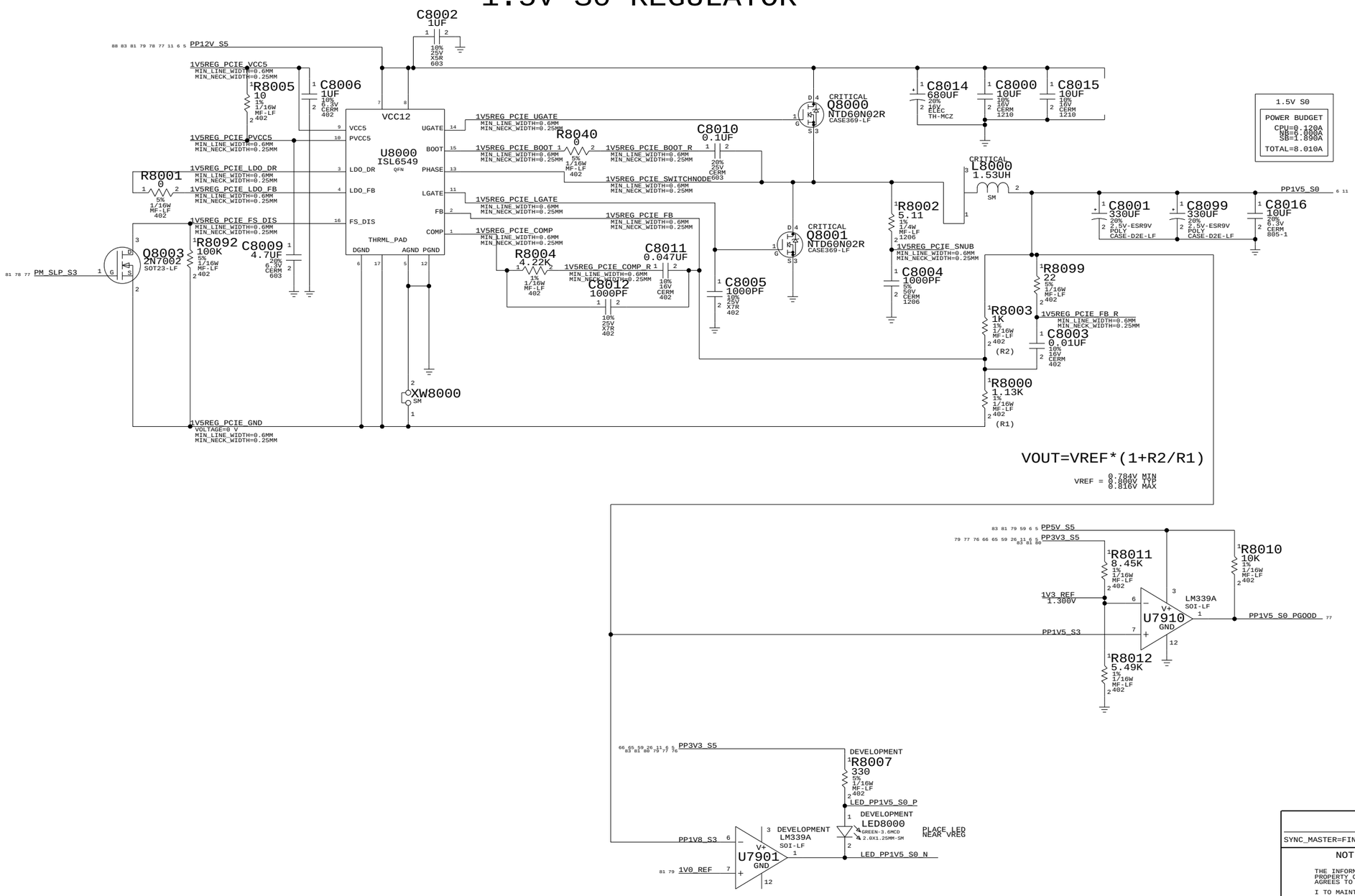

1.5V Vreg

SYNC_MASTER=FINO-PC SYNC_DATE=05/18/2005

NOTICE OF PROPRIETARY PROPERTY

THE INFORMATION CONTAINED HEREIN IS THE PROPRIETARY PROPERTY OF APPLE COMPUTER, INC. THE POSSESSOR AGREES TO THE FOLLOWING

I TO MAINTAIN THE DOCUMENT IN CONFIDENCE

II NOT TO REPRODUCE OR COPY IT

III NOT TO REVEAL OR PUBLISH IN WHOLE OR PART

APPLE COMPUTER INC.

SIZE	DRAWING NUMBER	REV.
D	051-7148	13
SCALE NONE	SHT 80 OF 110	

1.05V S0 REGULATOR

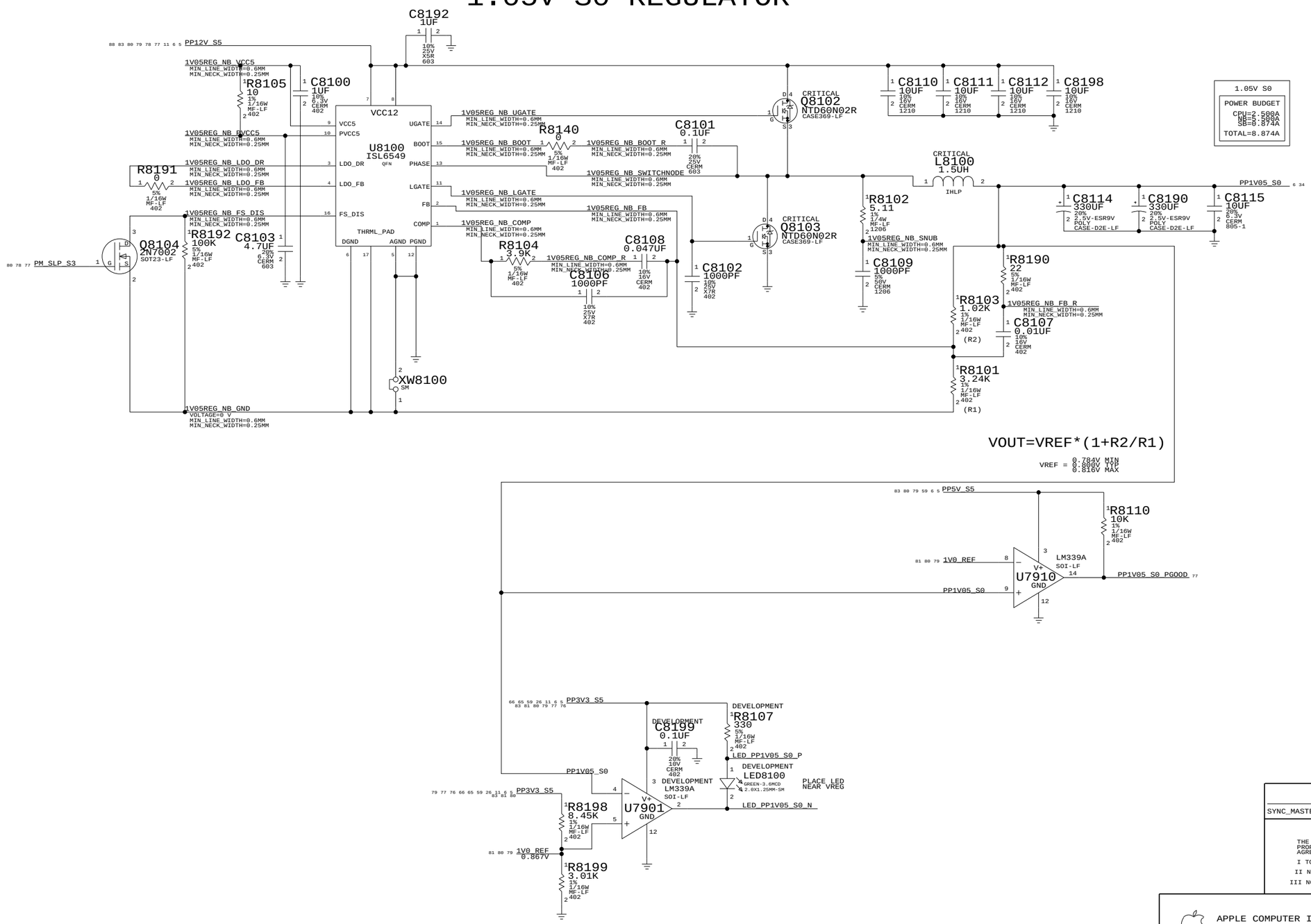

1.05V VREG

SYNC_MASTER=M38-RT SYNC_DATE=05/18/2005

NOTICE OF PROPRIETARY PROPERTY

THE INFORMATION CONTAINED HEREIN IS THE PROPRIETARY PROPERTY OF APPLE COMPUTER, INC. THE POSSESSOR AGREES TO THE FOLLOWING

I TO MAINTAIN THE DOCUMENT IN CONFIDENCE

II NOT TO REPRODUCE OR COPY IT

III NOT TO REVEAL OR PUBLISH IN WHOLE OR PART

APPLE COMPUTER INC.

SIZE	DRAWING NUMBER	REV.
D	051-7148	13
SCALE NONE	SHT 81 OF 110	

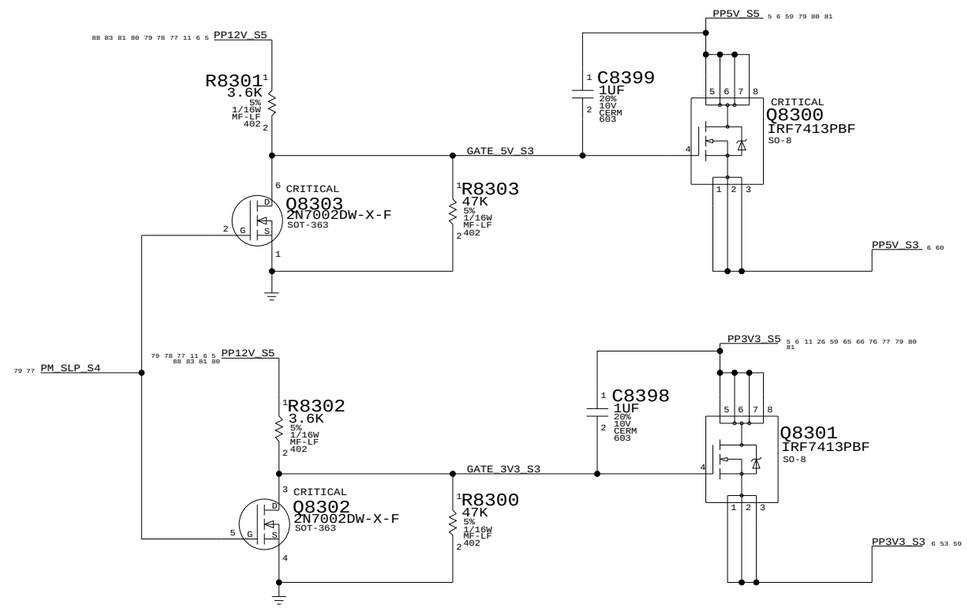

5V & 3.3V Fets

SYNC_MASTER=FINO-PC SYNC_DATE=04/12/2005

NOTICE OF PROPRIETARY PROPERTY

THE INFORMATION CONTAINED HEREIN IS THE PROPRIETARY PROPERTY OF APPLE COMPUTER, INC. THE POSSESSOR AGREES TO THE FOLLOWING

I TO MAINTAIN THE DOCUMENT IN CONFIDENCE

II NOT TO REPRODUCE OR COPY IT

III NOT TO REVEAL OR PUBLISH IN WHOLE OR PART

APPLE COMPUTER INC.

SIZE	DRAWING NUMBER	REV.
D	051-7148	13
SCALE NONE	SHT 83 OF 110	

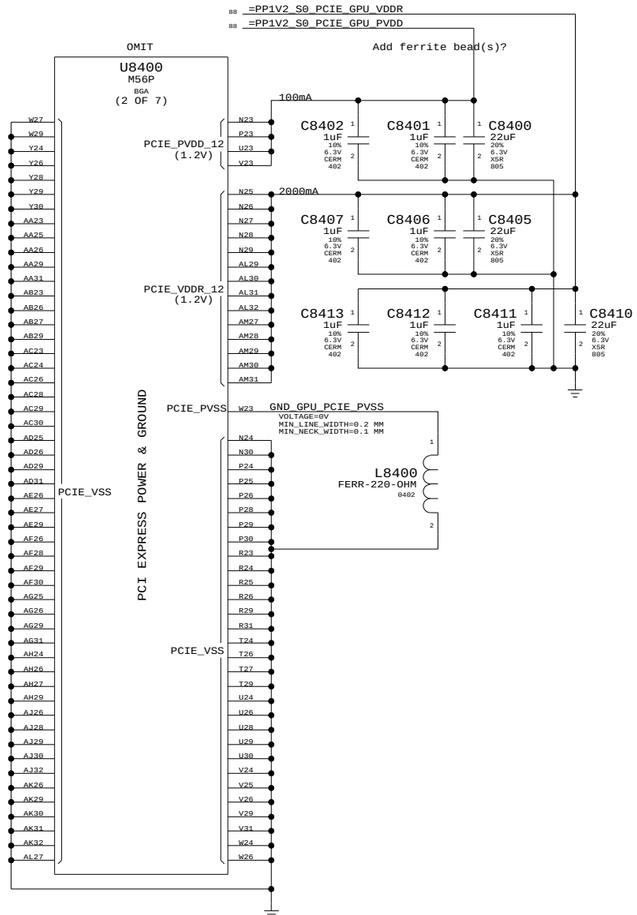

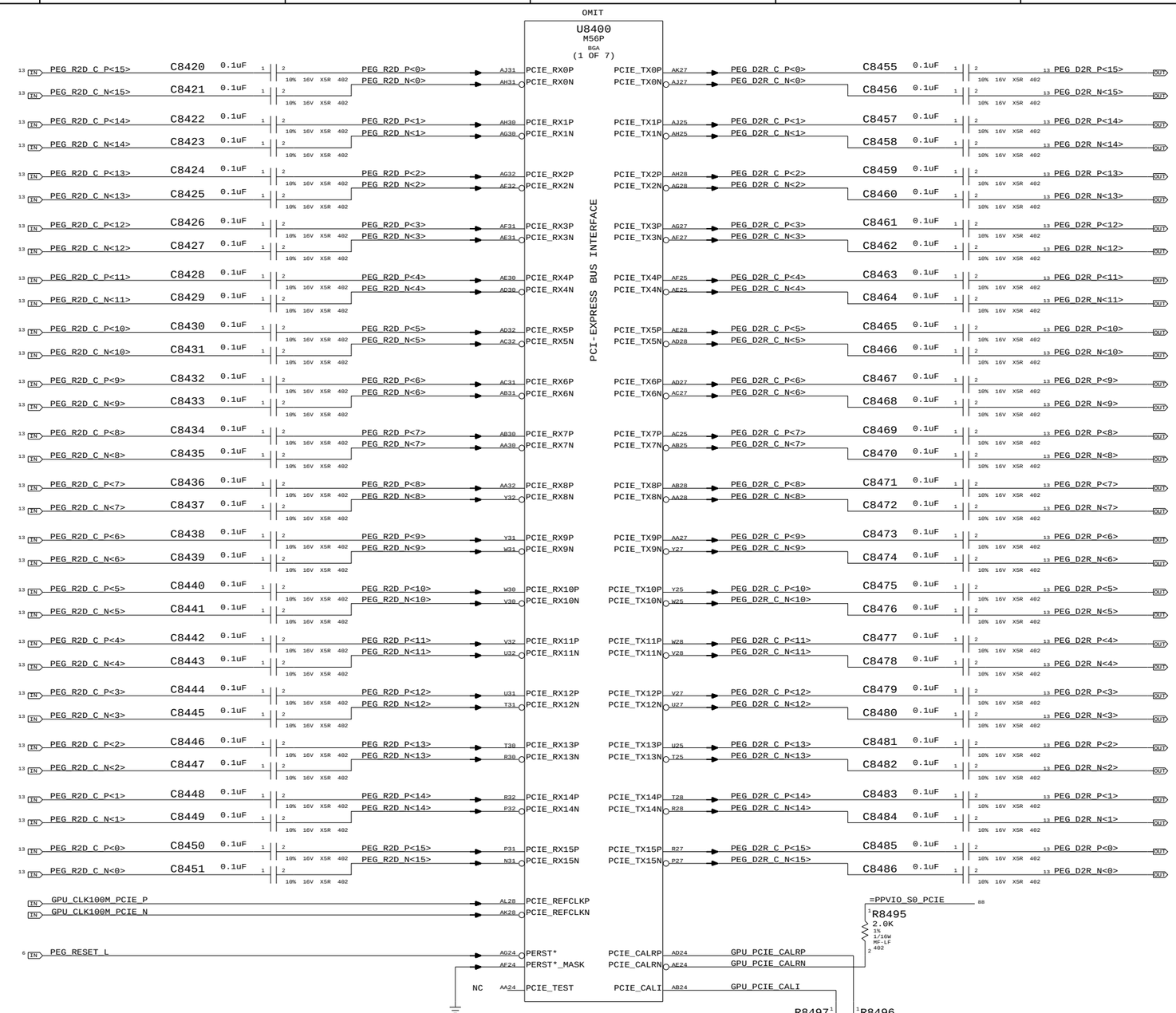

ATI M56 PCI-E

SYNC_MASTER=(MASTER) SYNC_DATE=(MASTER)

NOTICE OF PROPRIETARY PROPERTY

THE INFORMATION CONTAINED HEREIN IS THE PROPRIETARY PROPERTY OF APPLE COMPUTER, INC. THE POSSESSOR AGREES TO THE FOLLOWING

I TO MAINTAIN THE DOCUMENT IN CONFIDENCE

II NOT TO REPRODUCE OR COPY IT

III NOT TO REVEAL OR PUBLISH IN WHOLE OR PART

APPLE COMPUTER INC.

SIZE	DRAWING NUMBER	REV.
D	051-7148	13

SCALE NONE SHT 84 OF 110

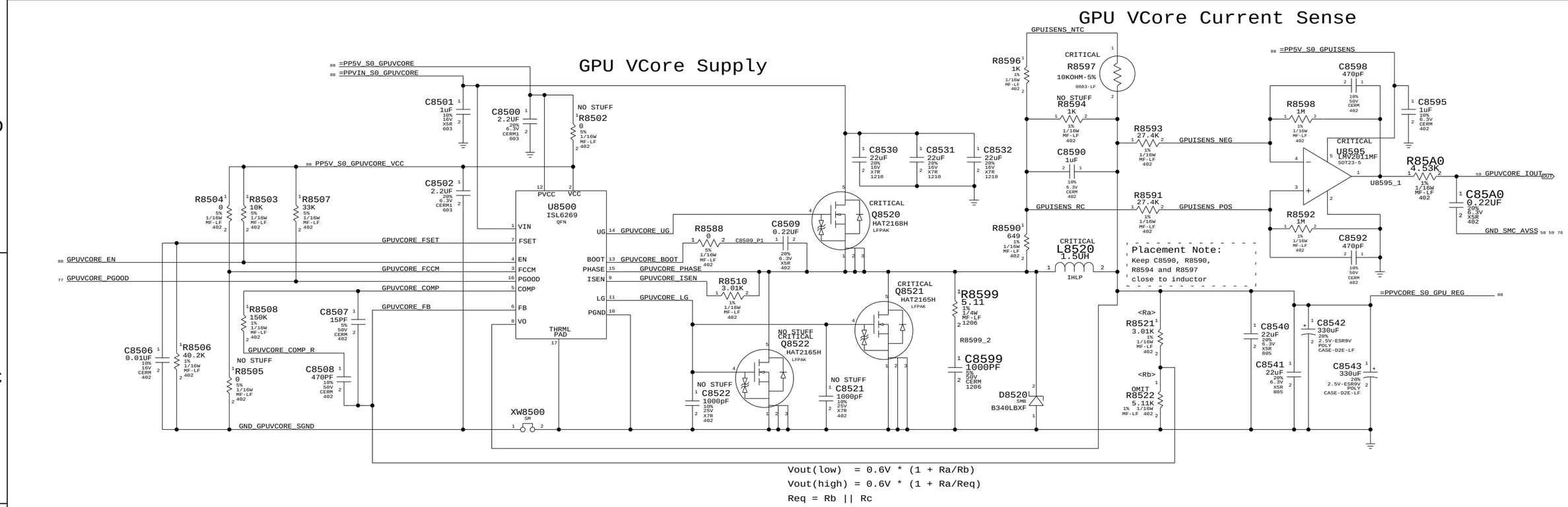

Vout(low) = 0.6V * (1 + Ra/Rb)
Vout(high) = 0.6V * (1 + Ra/Req)
Req = Rb || Rc

Back-Bias Positive Supply

=PPVCORE_S0_GPU_BBP — =PPVOUT_S0_GPUBBP_LDO

Back-Bias Negative Supply

=PNVOUT_S0_GPUBBN_REG

GPU (M56) Core Supplies

SYNC_MASTER=(MASTER) SYNC_DATE=(MASTER)

NOTICE OF PROPRIETARY PROPERTY

THE INFORMATION CONTAINED HEREIN IS THE PROPRIETARY PROPERTY OF APPLE COMPUTER, INC. THE POSSESSOR AGREES TO THE FOLLOWING

I TO MAINTAIN THE DOCUMENT IN CONFIDENCE
II NOT TO REPRODUCE OR COPY IT
III NOT TO REVEAL OR PUBLISH IN WHOLE OR PART

APPLE COMPUTER INC.

SIZE	DRAWING NUMBER	REV.
D	051-7148	13

SCALE NONE — SHT 85 OF 110

Page Notes

Power aliases required by this page:
- =PP1V5_GPU_VDD15
- =PP1VR1V3_GPU_VCORE

Signal aliases required by this page:
(NONE)

BOM options provided by this page:
(NONE)

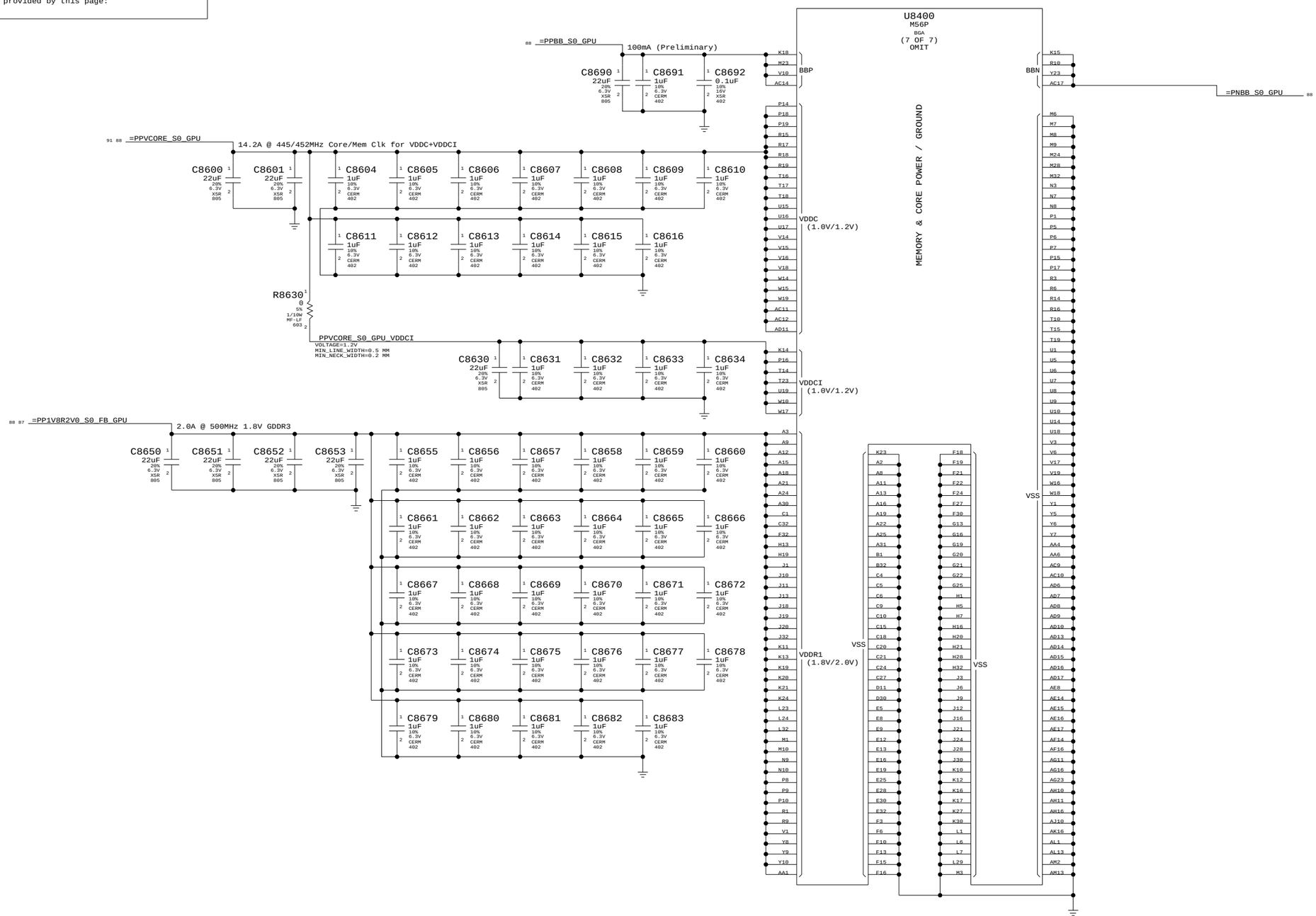

ATI M56 Core Power

SYNC_MASTER=(MASTER) SYNC_DATE=(MASTER)

NOTICE OF PROPRIETARY PROPERTY

THE INFORMATION CONTAINED HEREIN IS THE PROPRIETARY PROPERTY OF APPLE COMPUTER, INC. THE POSSESSOR AGREES TO THE FOLLOWING

I TO MAINTAIN THE DOCUMENT IN CONFIDENCE

II NOT TO REPRODUCE OR COPY IT

III NOT TO REVEAL OR PUBLISH IN WHOLE OR PART

APPLE COMPUTER INC.

SIZE	DRAWING NUMBER	REV.
D	051-7148	13

SCALE NONE SHT 86 OF 110

Page Notes

Power aliases required by this page:
- =PP1V8R2V0_S0_FB_GPU

Signal aliases required by this page:
(NONE)

BOM options provided by this page:
(NONE)

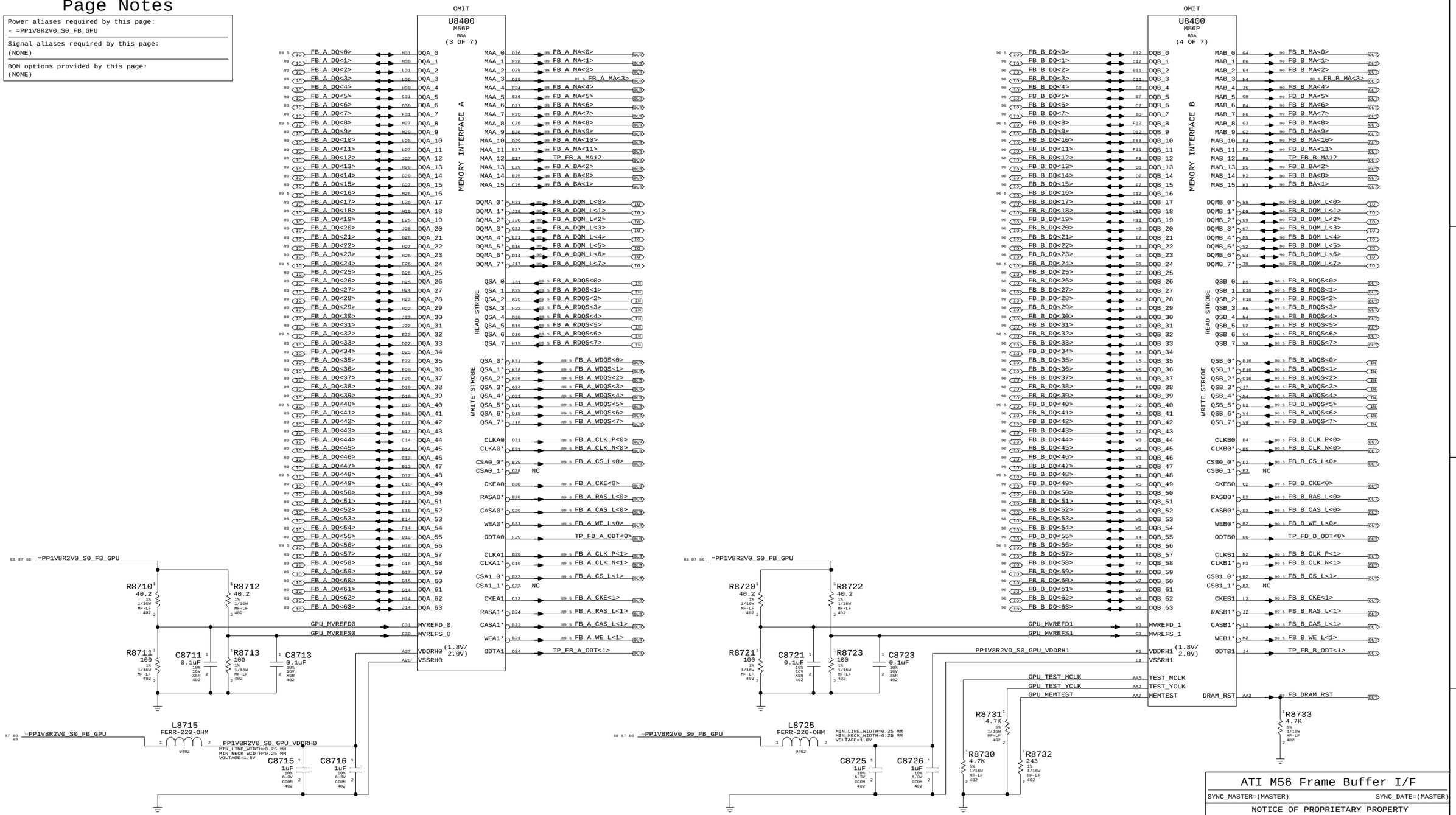

ATI M56 Frame Buffer I/F

SYNC_MASTER=(MASTER) SYNC_DATE=(MASTER)

NOTICE OF PROPRIETARY PROPERTY

THE INFORMATION CONTAINED HEREIN IS THE PROPRIETARY PROPERTY OF APPLE COMPUTER, INC. THE POSSESSOR AGREES TO THE FOLLOWING

I TO MAINTAIN THE DOCUMENT IN CONFIDENCE

II NOT TO REPRODUCE OR COPY IT

III NOT TO REVEAL OR PUBLISH IN WHOLE OR PART

APPLE COMPUTER INC.

SIZE	DRAWING NUMBER	REV.
D	051-7148	13

SCALE	SHT	OF
NONE	87	110

"S0" GPU RAILS

ONLY ON IN RUN

59 PP1V0R1V2_S0_GPU
MAKE_BASE=TRUE
MIN_LINE_WIDTH=0.6MM
MIN_NECK_WIDTH=0.125MM
VOLTAGE=1.2V
- =PPVCORE_S0_GPU_REG 85
- =PPVCORE_S0_GPU 86 91
- =PPVCORE_S0_GPU_BBP 85

85 PP5V_S0_GPUVCORE_VCC
MAKE_BASE=TRUE
MIN_LINE_WIDTH=0.6MM
MIN_NECK_WIDTH=0.125MM
VOLTAGE=5V
- 10 1 — R8800 1/16W 603 MF-LF 5% — 2
- =PP5V_S0_GPUVCORE 85
- GPUVCORE_VCC
MAKE_BASE=TRUE
MIN_LINE_WIDTH=0.6MM
MIN_NECK_WIDTH=0.125MM
VOLTAGE=5V

PP1V2_GPU_IO_S0
MAKE_BASE=TRUE
MIN_LINE_WIDTH=0.6MM
MIN_NECK_WIDTH=0.125MM
VOLTAGE=1.2V
- =PP1V2_S0_PCIE_GPU_VDDR 84
- =PP1V2_S0_PCIE_GPU_PVDD 84
- =PPVIO_S0_PCIE 84
- =PP1V2_S0_REG 77
- =PP1V2_S0_GPU_VDDPLL 91

PPBB_S0_GPU
MAKE_BASE=TRUE
MIN_LINE_WIDTH=0.6MM
MIN_NECK_WIDTH=0.125MM
VOLTAGE=1.2V
- =PPVOUT_S0_GPUBBP_LDO 85
- =PPBB_S0_GPU 86

PNBB_S0_GPU
MAKE_BASE=TRUE
MIN_LINE_WIDTH=0.6MM
MIN_NECK_WIDTH=0.2MM
VOLTAGE=0
- =PNVOUT_S0_GPUBBN_REG 85
- =PNBB_S0_GPU 86

76 61 59 41 26 11 10 6 PP3V3_S0
- =PP3V3_S0_GPUBBP
- =PP3V3_S0_GPUBBCTL
- =PP3V3_DDC_DVI 97
- =PP3V3_S0_LCD 94
- =PP3V3_S0_GPU_VDDR3 88 91
- =PP3V3_S0_GPU 6 91 93 97
- =PP3V3_S0_GPUBBN
- =PP3V3_S0_GPU_CLOCKS
- =PP3V3_DDC_LCD 94
- =PP3V3_GPU 94

77 11 6 PP2V5_S0
- =PP2V5_S0_GPU_PVDD 91
- =PP2V5_S0_GPU_VDD25 91
- =PP2V5_S0_GPU_VDDC_CT 91
- =PP2V5_S0_GPU 93

PP1V8R2V0_S0_FB_GPU
MAKE_BASE=TRUE
MIN_LINE_WIDTH=0.6MM
MIN_NECK_WIDTH=0.125MM
VOLTAGE=1.8V
- =PP1V8_S0_FB_VDD 89 90
- =PP1V8R3V3_S0_GPU_VDDR4 91
- =PP1V8R3V3_S0_GPU_VDDR5 91
- =PP1V8_S0_FB_VDDQ 89 90
- PP1V8_S0 78
- =PP1V8R2V0_S0_FB_GPU 86 87

83 81 80 79 78 77 11 6 5 PP12V_S5
- =PPVIN_S0_GPUVCORE 85

6 PP12V_S0
- =PP12V_GPU 94

97 75 6 PP5V_S0
- =PP5V_S0_GPUBBCTL
- =PP5V_S0_DVI_DDC 97
- =PP5V_S0_GPUISENS 85

85 GPUVCORE_EN
- 33 1 — R8801 1/16W 402 MF-LF 5% — 2
- PM_SLP_S3_L 6 23 58 77 79

87 FB_DRAM_RST
MAKE_BASE=TRUE
- DRAM_RST 5 89 90

M56 GPIOS

=PP3V3_S0_GPU_VDDR3 88 91

94 91 GPU_GPIO_0
- 10K 1 — R8813 1/16W 402 MF-LF 5% — 2

GPIO 0 = TRANSMITTER POWER SAVINGS ENABLE
INTERNAL PULL DOWN, ATI RECOMMENDS HIGH

91 GPU_GPIO_1
- 10K 1 — R8802 1/16W 402 MF-LF 5% — 2

GPIO 1 = TRANSMITTER DE-EMPHASIS ENABLE
INTERNAL PULL DOWN, ATI RECOMMENDS HIGH

91 GPU_GPIO_2
- 10K 1 — NOSTUFF R8803 1/16W 402 MF-LF 5% — 2

91 GPU_GPIO_3
- 10K 1 — NOSTUFF R8804 1/16W 402 MF-LF 5% — 2

91 GPU_GPIO_4
- 10K 1 — NOSTUFF R8805 1/16W 402 MF-LF 5% — 2

GPIO 4 = DEBUG SIGNALS OUT

91 GPU_GPIO_5
- 10K 1 — R8806 1/16W 402 MF-LF 5% — 2

91 GPU_GPIO_6
- 10K 1 — NOSTUFF R8807 1/16W 402 MF-LF 5% — 2

TP_GPU_GPIO_7
MAKE_BASE=TRUE
- GPU_GPIO_7 91

91 GPU_GPIO_8
- 10K 1 — NOSTUFF R8808 1/16W 402 MF-LF 5% — 2

NC_GPU_GPIO_10
MAKE_BASE=TRUE
- GPU_GPIO_10 91

91 GPU_GPIO_9
- 10K 1 — NOSTUFF R8809 1/16W 402 MF-LF 5% — 2

91 GPU_GPIO_13
- 10K 1 — NOSTUFF R8812 1/16W 402 MF-LF 5% — 2

91 GPU_GPIO_12
- 10K 1 — ATI_FB_256M R8810 1/16W 402 MF-LF 5% — 2

91 GPU_GPIO_11
- 10K 1 — NOSTUFF R8811 1/16W 402 MF-LF 5% — 2

GPIO 9,13,12,11 = ROM ID CFG
INTERNAL PULL DOWN
0010 = 256 M APERATURE SIZE

91 GPU_GPIO_24
- 10K 1 — ATI_FB_256M R8830 1/16W 402 MF-LF 5% — 2

91 GPU_GPIO_27
- 10K 1 — ATI_FB_HYNIX R8831 1/16W 402 MF-LF 5% — 2

91 GPU_GPIO_28
- 10K 1 — R8832 1/16W 402 MF-LF 5% — 2

91 GPU_GPIO_29
- 10K 1 — TMDS_PANEL R8833 1/16W 402 MF-LF 5% — 2

GPU_VCORE_LOW
MAKE_BASE=TRUE
- GPU_GPIO_15 91
- 10K 1 — R8850 1/16W 402 MF-LF 5% — 2

GPIO 15 = SWITCH CORE VOLTAGE HIGH TO LOW
EXTERNAL PULL DOWN RECOMMENDED

TP_GPU_GPIO_14
MAKE_BASE=TRUE
- GPU_GPIO_14 91

TP_GPU_GPIO_17
MAKE_BASE=TRUE
- GPU_GPIO_17 91

TP_GPU_VGA_R
MAKE_BASE=TRUE
- GPU_VGA_R 93

TP_GPU_VGA_G
MAKE_BASE=TRUE
- GPU_VGA_G 93

TP_GPU_VGA_B
MAKE_BASE=TRUE
- GPU_VGA_B 93

TP_GPU_VGA_HSYNC
MAKE_BASE=TRUE
- GPU_VGA_HSYNC 93

TP_GPU_VGA_VSYNC
MAKE_BASE=TRUE
- GPU_VGA_VSYNC 93

TP_GPU_TV_Y
MAKE_BASE=TRUE
- GPU_TV_Y 93

TP_GPU_TV_COMP
MAKE_BASE=TRUE
- GPU_TV_COMP 93

TP_GPU_TV_C
MAKE_BASE=TRUE
- GPU_TV_C 93

TP_GPU_DDC_B_CLK
MAKE_BASE=TRUE
- GPU_DDC_B_CLK 93

TP_GPU_DDC_B_DATA
MAKE_BASE=TRUE
- GPU_DDC_B_DATA 93

GPU MISC

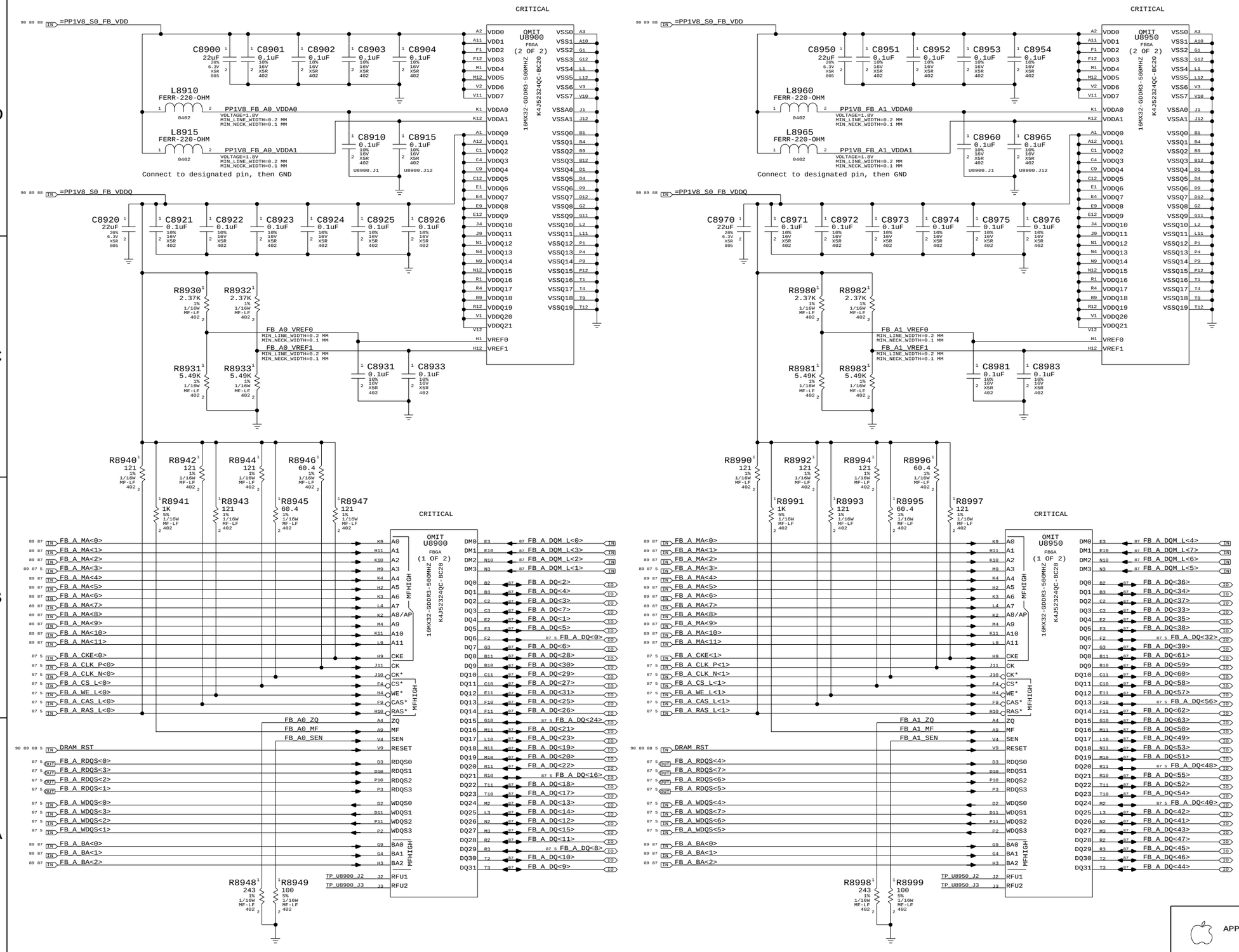

Page Notes

Power aliases required by this page:
- =PP1V8_S0_FB_VDD
- =PP1V8_S0_FB_VDDQ

Signal aliases required by this page:
(NONE)

BOM options provided by this page:
(NONE)

GDDR3 Frame Buffer A

SYNC_MASTER=(MASTER) SYNC_DATE=(MASTER)

NOTICE OF PROPRIETARY PROPERTY

THE INFORMATION CONTAINED HEREIN IS THE PROPRIETARY PROPERTY OF APPLE COMPUTER, INC. THE POSSESSOR AGREES TO THE FOLLOWING

I TO MAINTAIN THE DOCUMENT IN CONFIDENCE

II NOT TO REPRODUCE OR COPY IT

III NOT TO REVEAL OR PUBLISH IN WHOLE OR PART

APPLE COMPUTER INC.

SIZE	DRAWING NUMBER	REV.
D	051-7148	13

SCALE NONE | SHT 89 OF 110

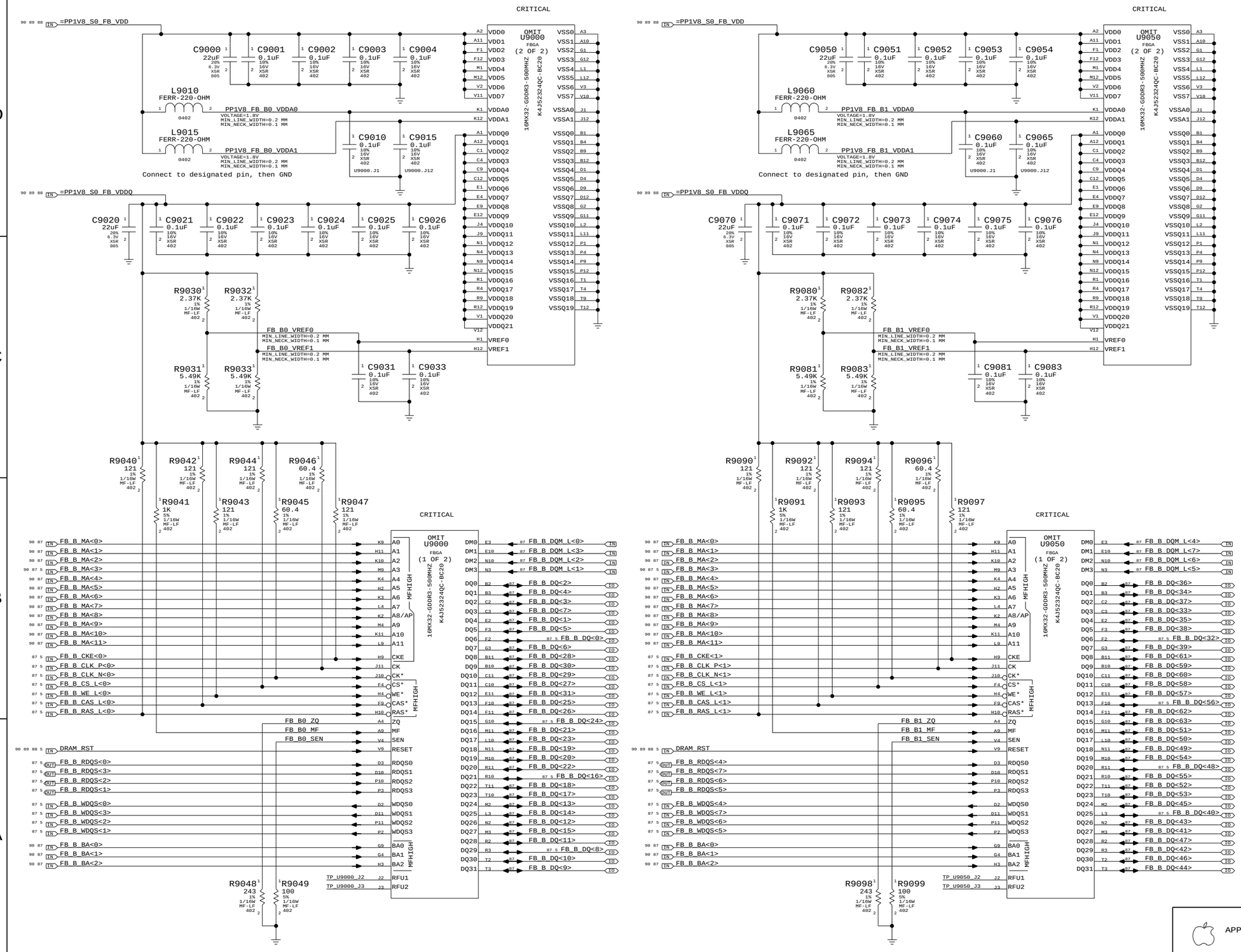

Page Notes

Power aliases required by this page:
- =PP1V8_S0_FB_VDD
- =PP1V8_S0_FB_VDDQ

Signal aliases required by this page:
(NONE)

BOM options provided by this page:
(NONE)

GDDR3 Frame Buffer B

SYNC_MASTER=(MASTER) SYNC_DATE=(MASTER)

NOTICE OF PROPRIETARY PROPERTY

THE INFORMATION CONTAINED HEREIN IS THE PROPRIETARY PROPERTY OF APPLE COMPUTER, INC. THE POSSESSOR AGREES TO THE FOLLOWING

I TO MAINTAIN THE DOCUMENT IN CONFIDENCE

II NOT TO REPRODUCE OR COPY IT

III NOT TO REVEAL OR PUBLISH IN WHOLE OR PART

APPLE COMPUTER INC.

SIZE	DRAWING NUMBER	REV.
D	051-7148	13

SCALE NONE | SHT 90 OF 110

Page Notes

Power aliases required by this page:
- =PP3V3_GPU_GPIOS
- =PP2V5_PVDD
- =PP1V8_GPU_LVDS_PLL

Signal aliases required by this page:
- =I2C_GPU_TMDS_SDA - I2C data line for external TMDS transmitters
- =I2C_GPU_TMDS_SCL - I2C clock line for external TMDS transmitters

BOM options provided by this page:
(NONE)

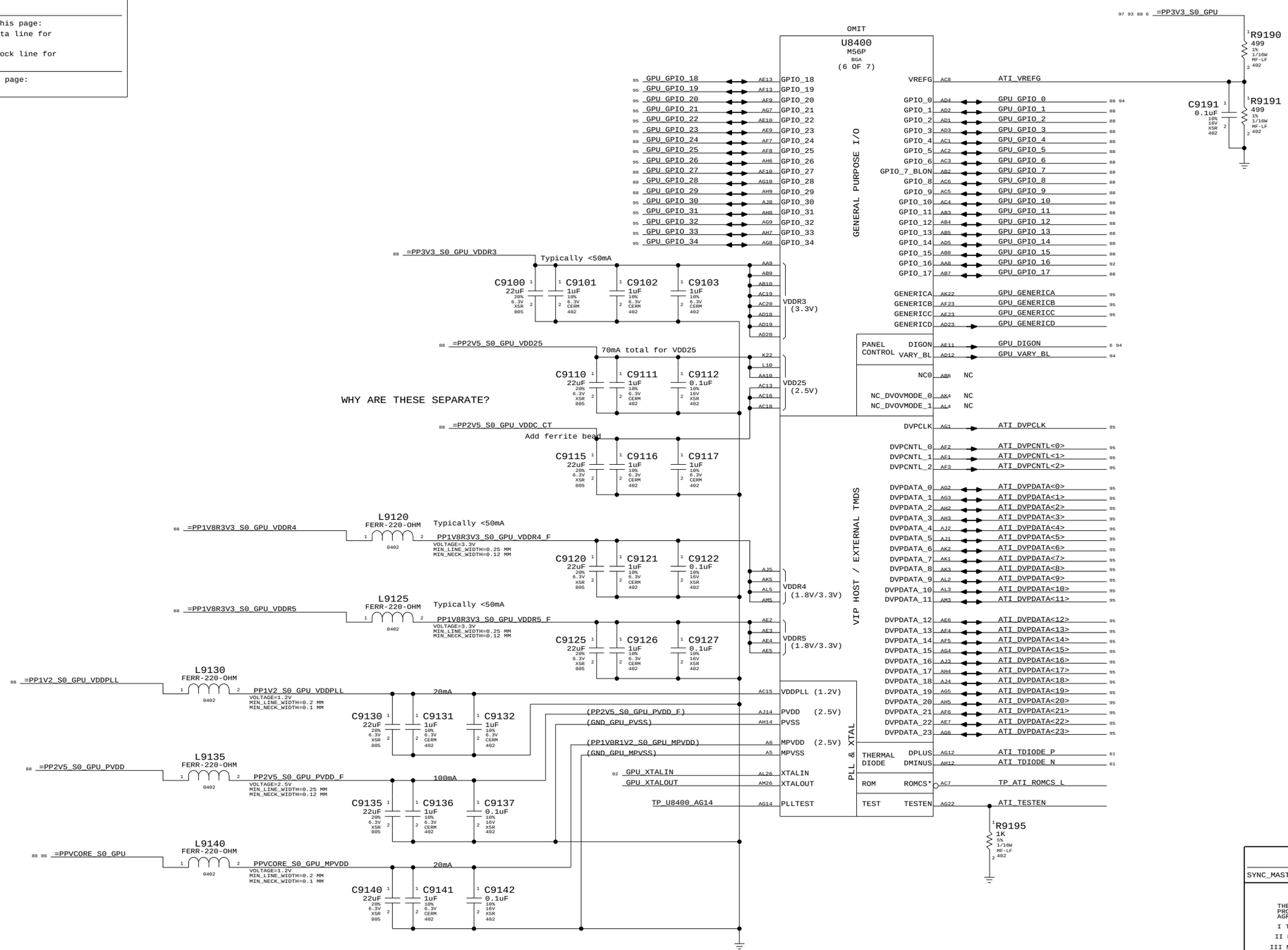

ATI M56 GPIO/DVO/Misc

SYNC_MASTER=(MASTER) SYNC_DATE=(MASTER)

NOTICE OF PROPRIETARY PROPERTY

THE INFORMATION CONTAINED HEREIN IS THE PROPRIETARY PROPERTY OF APPLE COMPUTER, INC. THE POSSESSOR AGREES TO THE FOLLOWING

I TO MAINTAIN THE DOCUMENT IN CONFIDENCE

II NOT TO REPRODUCE OR COPY IT

III NOT TO REVEAL OR PUBLISH IN WHOLE OR PART

APPLE COMPUTER INC.

SIZE	DRAWING NUMBER	REV.
D	051-7148	13
SCALE NONE	SHT 91 OF 110	

Page Notes

Power aliases required by this page:
- =PP3V3_GPU_CLOCKS
- =PPVIN_GPU_LVDDR_LDO
- =PP2V5_GPU_LVDDR_LDO
- =PP3V3_GPU_PWRSEQ
- =PP2V5_GPU_PWRSEQ
- =PP1V8_GPU_PWRSEQ
- =PP1V5_GPU_PWRSEQ

Signal aliases required by this page:
(NONE)

BOM options provided by this page:
- GPU_SS
- GPU_LVDDR_2V8

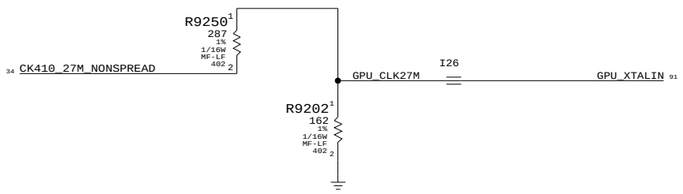

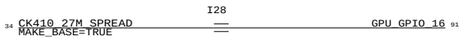

GPU CLOCKS

SYNC_MASTER=BOZEMAN SYNC_DATE=05/21/2005

NOTICE OF PROPRIETARY PROPERTY

THE INFORMATION CONTAINED HEREIN IS THE PROPRIETARY PROPERTY OF APPLE COMPUTER, INC. THE POSSESSOR AGREES TO THE FOLLOWING

I TO MAINTAIN THE DOCUMENT IN CONFIDENCE

II NOT TO REPRODUCE OR COPY IT

III NOT TO REVEAL OR PUBLISH IN WHOLE OR PART

APPLE COMPUTER INC.

SIZE	DRAWING NUMBER	REV.
D	051-7148	13

SCALE NONE | SHT 92 OF 110

Page Notes

Power aliases required by this page:
- =PP2V5_S0_GPU
- =PP1V8R2V5_S0_GPU_LVDDR

Signal aliases required by this page:
(NONE)

BOM options provided by this page:
(NONE)

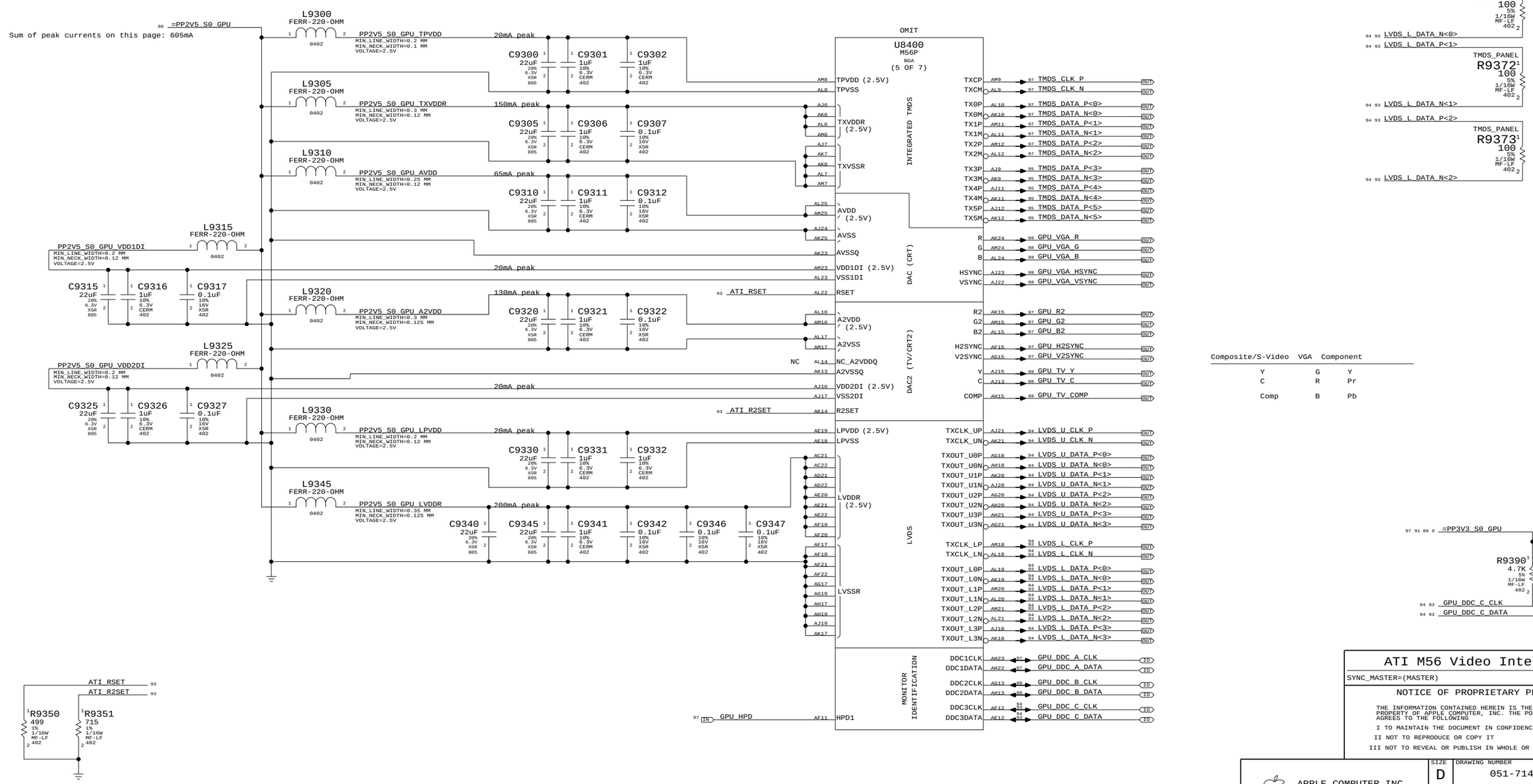

ATI M56 Video Interfaces

SYNC_MASTER=(MASTER) SYNC_DATE=(MASTER)

NOTICE OF PROPRIETARY PROPERTY

THE INFORMATION CONTAINED HEREIN IS THE PROPRIETARY PROPERTY OF APPLE COMPUTER, INC. THE POSSESSOR AGREES TO THE FOLLOWING

I TO MAINTAIN THE DOCUMENT IN CONFIDENCE

II NOT TO REPRODUCE OR COPY IT

III NOT TO REVEAL OR PUBLISH IN WHOLE OR PART

APPLE COMPUTER INC.

SIZE	DRAWING NUMBER	REV.
D	051-7148	13

SCALE NONE SHT 93 OF 110

LCD (LVDS) INTERFACE

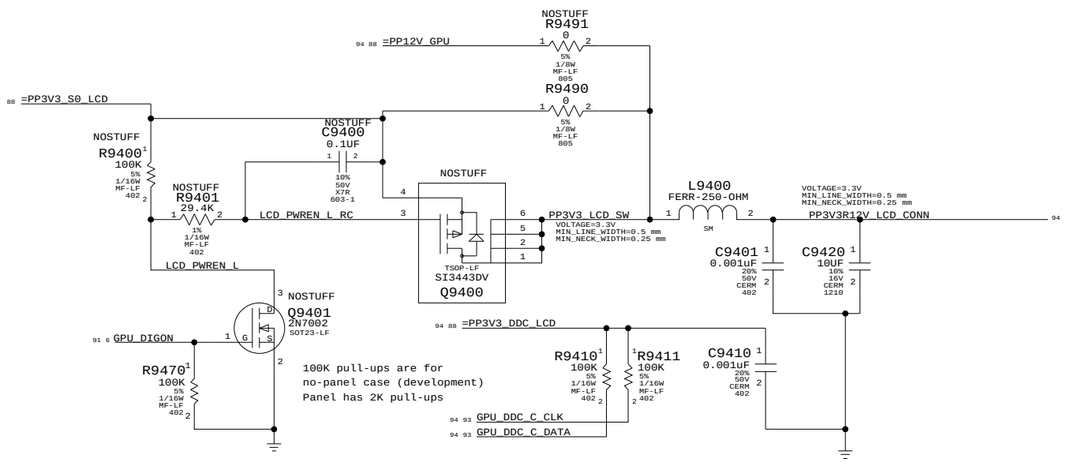

INVERTER INTERFACE

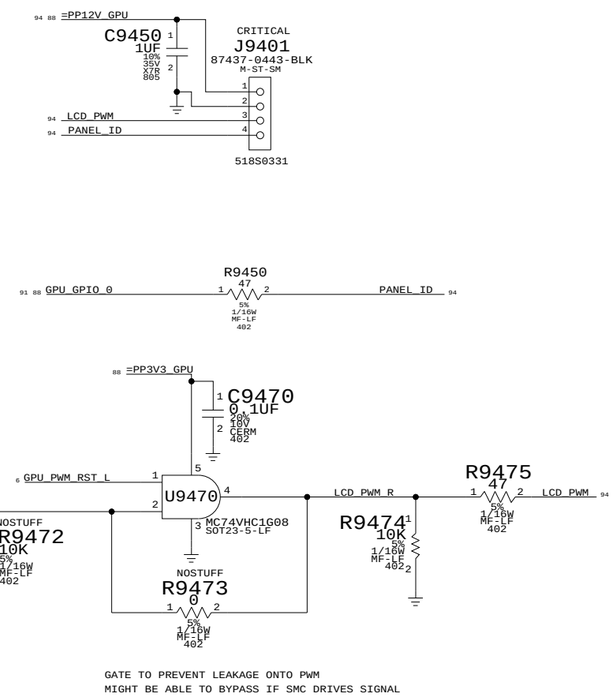

GATE TO PREVENT LEAKAGE ONTO PWM
MIGHT BE ABLE TO BYPASS IF SMC DRIVES SIGNAL

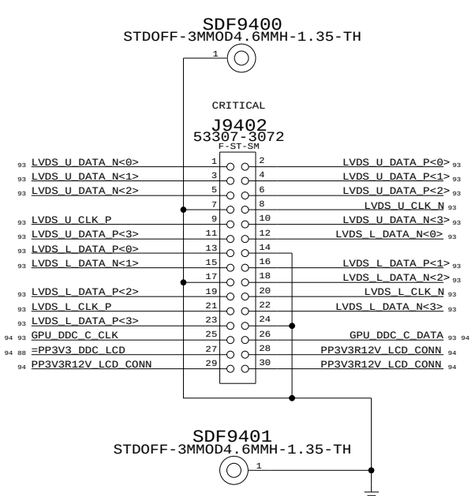

Internal Display Conns		
SYNC_MASTER=BOZEMAN	SYNC_DATE=04/27/2005	

NOTICE OF PROPRIETARY PROPERTY

THE INFORMATION CONTAINED HEREIN IS THE PROPRIETARY PROPERTY OF APPLE COMPUTER, INC. THE POSSESSOR AGREES TO THE FOLLOWING

I TO MAINTAIN THE DOCUMENT IN CONFIDENCE

II NOT TO REPRODUCE OR COPY IT

III NOT TO REVEAL OR PUBLISH IN WHOLE OR PART

APPLE COMPUTER INC.	SIZE	DRAWING NUMBER	REV.
	D	051-7148	13
	SCALE NONE	SHT 94 OF 110	

TP_TMDS_DATA_P<3>	MAKE_BASE=TRUE	TMDS_DATA_P<3>	93
TP_TMDS_DATA_N<3>	MAKE_BASE=TRUE	TMDS_DATA_N<3>	93
TP_TMDS_DATA_P<4>	MAKE_BASE=TRUE	TMDS_DATA_P<4>	93
TP_TMDS_DATA_N<4>	MAKE_BASE=TRUE	TMDS_DATA_N<4>	93
TP_TMDS_DATA_P<5>	MAKE_BASE=TRUE	TMDS_DATA_P<5>	93
TP_TMDS_DATA_N<5>	MAKE_BASE=TRUE	TMDS_DATA_N<5>	93
TP_ATI_DVPDATA<23>	MAKE_BASE=TRUE	ATI_DVPDATA<23>	91
TP_ATI_DVPDATA<22>	MAKE_BASE=TRUE	ATI_DVPDATA<22>	91
TP_ATI_DVPDATA<21>	MAKE_BASE=TRUE	ATI_DVPDATA<21>	91
TP_ATI_DVPDATA<20>	MAKE_BASE=TRUE	ATI_DVPDATA<20>	91
TP_ATI_DVPDATA<19>	MAKE_BASE=TRUE	ATI_DVPDATA<19>	91
TP_ATI_DVPDATA<18>	MAKE_BASE=TRUE	ATI_DVPDATA<18>	91
TP_ATI_DVPDATA<17>	MAKE_BASE=TRUE	ATI_DVPDATA<17>	91
TP_ATI_DVPDATA<16>	MAKE_BASE=TRUE	ATI_DVPDATA<16>	91
TP_ATI_DVPDATA<15>	MAKE_BASE=TRUE	ATI_DVPDATA<15>	91
TP_ATI_DVPDATA<14>	MAKE_BASE=TRUE	ATI_DVPDATA<14>	91
TP_ATI_DVPDATA<13>	MAKE_BASE=TRUE	ATI_DVPDATA<13>	91
TP_ATI_DVPDATA<12>	MAKE_BASE=TRUE	ATI_DVPDATA<12>	91
TP_ATI_DVPDATA<11>	MAKE_BASE=TRUE	ATI_DVPDATA<11>	91
TP_ATI_DVPDATA<10>	MAKE_BASE=TRUE	ATI_DVPDATA<10>	91
TP_ATI_DVPDATA<9>	MAKE_BASE=TRUE	ATI_DVPDATA<9>	91
TP_ATI_DVPDATA<8>	MAKE_BASE=TRUE	ATI_DVPDATA<8>	91
TP_ATI_DVPDATA<7>	MAKE_BASE=TRUE	ATI_DVPDATA<7>	91
TP_ATI_DVPDATA<6>	MAKE_BASE=TRUE	ATI_DVPDATA<6>	91
TP_ATI_DVPDATA<5>	MAKE_BASE=TRUE	ATI_DVPDATA<5>	91
TP_ATI_DVPDATA<4>	MAKE_BASE=TRUE	ATI_DVPDATA<4>	91
TP_ATI_DVPDATA<3>	MAKE_BASE=TRUE	ATI_DVPDATA<3>	91
TP_ATI_DVPDATA<2>	MAKE_BASE=TRUE	ATI_DVPDATA<2>	91
TP_ATI_DVPDATA<1>	MAKE_BASE=TRUE	ATI_DVPDATA<1>	91
TP_ATI_DVPDATA<0>	MAKE_BASE=TRUE	ATI_DVPDATA<0>	91
TP_ATI_DVPCLK	MAKE_BASE=TRUE	ATI_DVPCLK	91
TP_ATI_DVPCNTL<0>	MAKE_BASE=TRUE	ATI_DVPCNTL<0>	91
TP_ATI_DVPCNTL<1>	MAKE_BASE=TRUE	ATI_DVPCNTL<1>	91
TP_ATI_DVPCNTL<2>	MAKE_BASE=TRUE	ATI_DVPCNTL<2>	91

TP_GPU_GPIO<34>	MAKE_BASE=TRUE	GPU_GPIO_34	91
TP_GPU_GPIO<33>	MAKE_BASE=TRUE	GPU_GPIO_33	91
TP_GPU_GPIO<32>	MAKE_BASE=TRUE	GPU_GPIO_32	91
TP_GPU_GPIO<31>	MAKE_BASE=TRUE	GPU_GPIO_31	91
TP_GPU_GPIO<30>	MAKE_BASE=TRUE NO_TEST=TRUE	GPU_GPIO_30	91
TP_GPU_GPIO<26>	MAKE_BASE=TRUE	GPU_GPIO_26	91
TP_GPU_GPIO<25>	MAKE_BASE=TRUE	GPU_GPIO_25	91
TP_GPU_GPIO<23>	MAKE_BASE=TRUE	GPU_GPIO_23	91
TP_GPU_GPIO<22>	MAKE_BASE=TRUE	GPU_GPIO_22	91
TP_GPU_GPIO<21>	MAKE_BASE=TRUE	GPU_GPIO_21	91
TP_GPU_GPIO<20>	MAKE_BASE=TRUE	GPU_GPIO_20	91
TP_GPU_GPIO<19>	MAKE_BASE=TRUE	GPU_GPIO_19	91
TP_GPU_GPIO<18>	MAKE_BASE=TRUE	GPU_GPIO_18	91
TP_GPU_GENERICA	MAKE_BASE=TRUE	GPU_GENERICA	91
TP_GPU_GENERICB	MAKE_BASE=TRUE	GPU_GENERICB	91
TP_GPU_GENERICC	MAKE_BASE=TRUE	GPU_GENERICC	91

M56 TPS

NOTICE OF PROPRIETARY PROPERTY

THE INFORMATION CONTAINED HEREIN IS THE PROPRIETARY PROPERTY OF APPLE COMPUTER, INC. THE POSSESSOR AGREES TO THE FOLLOWING

I TO MAINTAIN THE DOCUMENT IN CONFIDENCE

II NOT TO REPRODUCE OR COPY IT

III NOT TO REVEAL OR PUBLISH IN WHOLE OR PART

APPLE COMPUTER INC.

SIZE	DRAWING NUMBER	REV.
D	051-7148	13
SCALE NONE	SHT 95 OF 110	

DVI INTERFACE

PART NUMBER	ALTERNATE FOR PART NUMBER	BOM OPTION	REF DES	COMMENTS:
740S0044	740S0028		F9710	FUSE

PLACE LEFT SIDE AS CLOSE TO GPU (U8400) AS POSSIBLE

PLACE FILTER CLOSE TO TMDS CONNECTOR

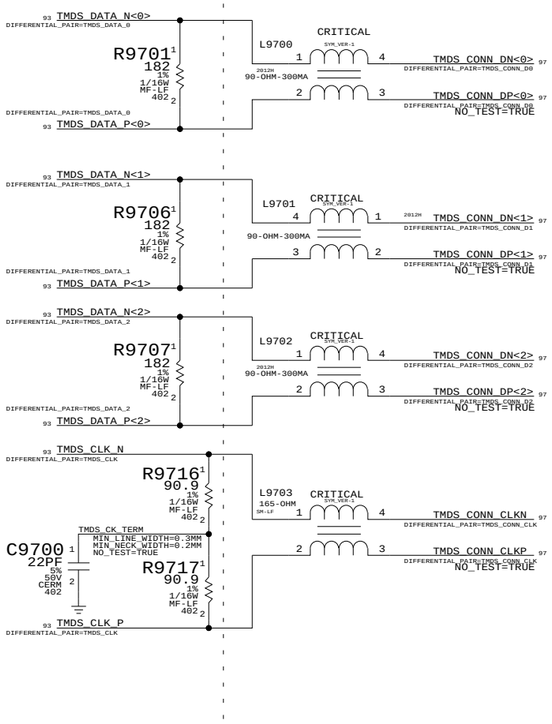

DVI DDC CURRENT LIMIT

(55mA requirement per DVI spec)

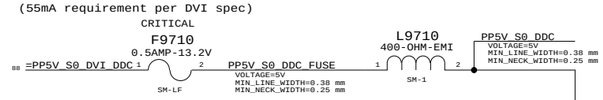

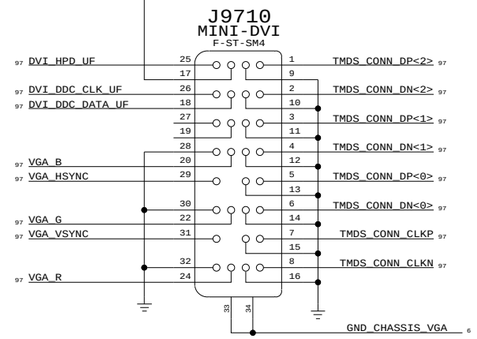

3V LEVEL SHIFTERS

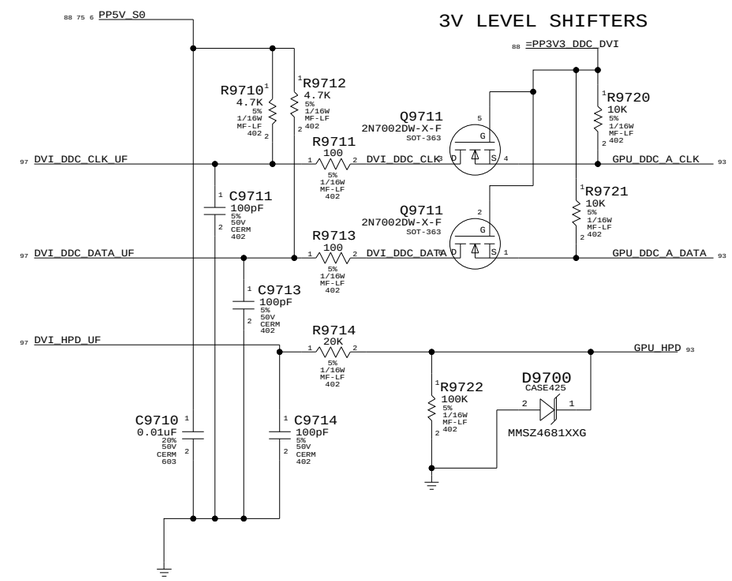

ANALOG FILTERING

PLACE CLOSE TO CONNECTOR

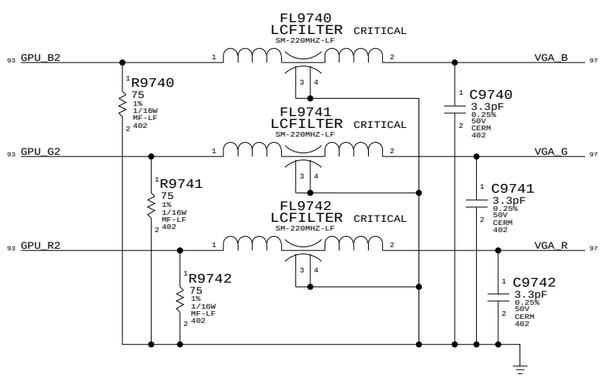

VGA SYNC BUFFERS

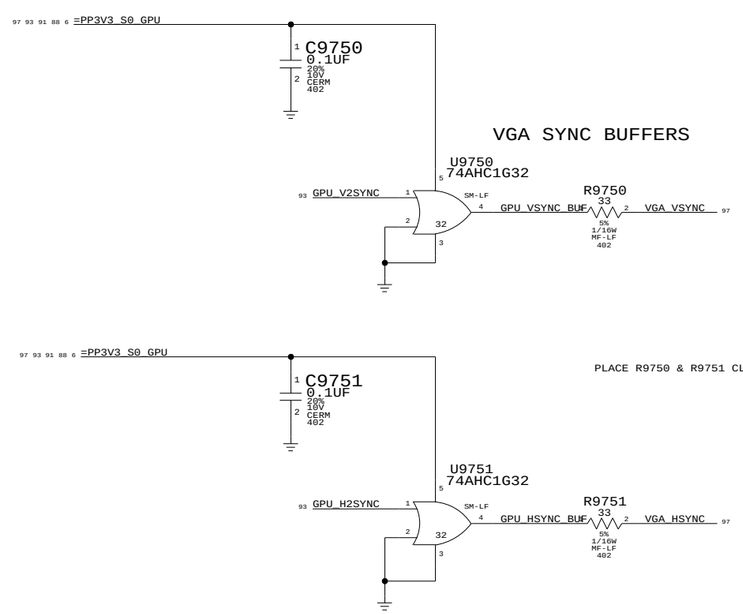

PLACE R9750 & R9751 CLOSE TO DVI CONNECTOR

External Display Conns

SYNC_MASTER=BOZEMAN SYNC_DATE=04/14/2005

NOTICE OF PROPRIETARY PROPERTY

THE INFORMATION CONTAINED HEREIN IS THE PROPRIETARY PROPERTY OF APPLE COMPUTER, INC. THE POSSESSOR AGREES TO THE FOLLOWING

I TO MAINTAIN THE DOCUMENT IN CONFIDENCE

II NOT TO REPRODUCE OR COPY IT

III NOT TO REVEAL OR PUBLISH IN WHOLE OR PART

APPLE COMPUTER INC.

SIZE	DRAWING NUMBER	REV.
D	051-7148	13

SCALE NONE SHT 97 OF 110

```
Title:        Basenet Report
Design:       m38a
Date:         Jun 21 19:41:15 2006

Base nets and synonyms for m38a_lib.M38A(@m38a_lib.m38a(sch_1))
Base Signal          Synonyms                        Location([Zone][dir])

0V7_REF              0V7_REF - @m38a_lib.M38A        79A3
1V0_REF              1V0_REF - @m38a_lib.M38A        79A5 80A5 81A5 81B3
1V2REG_BOOT          1V2REG_BOOT - @m38a_lib.M38A    77B5
1V2REG_ITH           1V2REG_ITH - @m38a_lib.M38A     77B6
1V2REG_ITH_RC        1V2REG_ITH_RC - @m38a_lib.M38A  77B6
1V2REG_MODE          1V2REG_MODE - @m38a_lib.M38A    77B6
1V2REG_PGOOD         1V2REG_PGOOD - @m38a_lib.M38A   77B5
1V2REG_RT            1V2REG_RT - @m38a_lib.M38A      77B6
1V2REG_RUNSS         1V2REG_RUNSS - @m38a_lib.M38A   77B6
1V2REG_SGND          1V2REG_SGND - @m38a_lib.M38A    77A8
1V2REG_SW            1V2REG_SW - @m38a_lib.M38A      77B5
1V2REG_SW_FIL        1V2REG_SW_FIL - @m38a_lib.M38A  77B4
1V2REG_VBIAS         1V2REG_VBIAS - @m38a_lib.M38A   77B6
1V2REG_VFB           1V2REG_VFB - @m38a_lib.M38A     77B6
1V3_REF              1V3_REF - @m38a_lib.M38A        80B3
1V05REG_NB_BOOT      1V05REG_NB_BOOT - @m38a_lib.M38A  81C6
1V05REG_NB_BOOT_R    1V05REG_NB_BOOT_R - @m38a_lib.M38A  81C5
1V05REG_NB_COMP      1V05REG_NB_COMP - @m38a_lib.M38A  81C6
1V05REG_NB_COMP_R    1V05REG_NB_COMP_R - @m38a_lib.M38A  81C5
1V05REG_NB_FB        1V05REG_NB_FB - @m38a_lib.M38A  81C5
1V05REG_NB_FB_R      1V05REG_NB_FB_R - @m38a_lib.M38A  81C3
1V05REG_NB_FS_DIS    1V05REG_NB_FS_DIS - @m38a_lib.M38A  81C7
1V05REG_NB_GND       1V05REG_NB_GND - @m38a_lib.M38A   81B7
1V05REG_NB_LDO_DR    1V05REG_NB_LDO_DR - @m38a_lib.M38A  81C7
1V05REG_NB_LDO_FB    1V05REG_NB_LDO_FB - @m38a_lib.M38A  81C7
1V05REG_NB_LGATE     1V05REG_NB_LGATE - @m38a_lib.M38A   81C6
1V05REG_NB_PVCC5     1V05REG_NB_PVCC5 - @m38a_lib.M38A   81D7
1V05REG_NB_SNUB      1V05REG_NB_SNUB - @m38a_lib.M38A    81C3
1V05REG_NB_SWITCHNOD 1V05REG_NB_SWITCHNODE -         81C5
E                    @m38a_lib.M38A
1V05REG_NB_UGATE     1V05REG_NB_UGATE - @m38a_lib.M38A   81D6
1V05REG_NB_VCC5      1V05REG_NB_VCC5 - @m38a_lib.M38A    81D7
1V5REG_PCIE_BOOT     1V5REG_PCIE_BOOT - @m38a_lib.M38A   80C6
1V5REG_PCIE_BOOT_R   1V5REG_PCIE_BOOT_R - @m38a_lib.M38A 80C5
1V5REG_PCIE_COMP     1V5REG_PCIE_COMP - @m38a_lib.M38A   80C6
1V5REG_PCIE_COMP_R   1V5REG_PCIE_COMP_R - @m38a_lib.M38A 80C5
1V5REG_PCIE_FB       1V5REG_PCIE_FB - @m38a_lib.M38A     80C5
1V5REG_PCIE_FB_R     1V5REG_PCIE_FB_R - @m38a_lib.M38A   80C3
1V5REG_PCIE_FS_DIS   1V5REG_PCIE_FS_DIS - @m38a_lib.M38A 80C7
1V5REG_PCIE_GND      1V5REG_PCIE_GND - @m38a_lib.M38A    80B7
1V5REG_PCIE_LDO_DR   1V5REG_PCIE_LDO_DR - @m38a_lib.M38A 80C7
1V5REG_PCIE_LDO_FB   1V5REG_PCIE_LDO_FB - @m38a_lib.M38A 80C7
1V5REG_PCIE_LGATE    1V5REG_PCIE_LGATE - @m38a_lib.M38A  80C6
1V5REG_PCIE_PVCC5    1V5REG_PCIE_PVCC5 - @m38a_lib.M38A  80D7
1V5REG_PCIE_SNUB     1V5REG_PCIE_SNUB - @m38a_lib.M38A   80C3
1V5REG_PCIE_SWITCHNO 1V5REG_PCIE_SWITCHNODE -        80C5
DE                   @m38a_lib.M38A
1V5REG_PCIE_UGATE    1V5REG_PCIE_UGATE - @m38a_lib.M38A  80D6
1V5REG_PCIE_VCC5     1V5REG_PCIE_VCC5 - @m38a_lib.M38A   80D7
1V6_REF              1V6_REF - @m38a_lib.M38A            79B3
1V8REG_DDR_BOOT      1V8REG_DDR_BOOT - @m38a_lib.M38A    79D6
1V8REG_DDR_BOOT_R    1V8REG_DDR_BOOT_R - @m38a_lib.M38A  79D5
1V8REG_DDR_COMP      1V8REG_DDR_COMP - @m38a_lib.M38A    79C6
1V8REG_DDR_COMP_R    1V8REG_DDR_COMP_R - @m38a_lib.M38A  79C5
1V8REG_DDR_FB        1V8REG_DDR_FB - @m38a_lib.M38A      79C5
1V8REG_DDR_FB_R      1V8REG_DDR_FB_R - @m38a_lib.M38A    79C3
1V8REG_DDR_FS_DIS    1V8REG_DDR_FS_DIS - @m38a_lib.M38A  79C7
1V8REG_DDR_GND       1V8REG_DDR_GND - @m38a_lib.M38A     79C7
1V8REG_DDR_LDO_DR    1V8REG_DDR_LDO_DR - @m38a_lib.M38A  79C7
1V8REG_DDR_LDO_FB    1V8REG_DDR_LDO_FB - @m38a_lib.M38A  79C7
1V8REG_DDR_LGATE     1V8REG_DDR_LGATE - @m38a_lib.M38A   79C6
1V8REG_DDR_PVCC5     1V8REG_DDR_PVCC5 - @m38a_lib.M38A   79D7
1V8REG_DDR_SNUB      1V8REG_DDR_SNUB - @m38a_lib.M38A    79C3
1V8REG_DDR_SWITCHNOD 1V8REG_DDR_SWITCHNODE -         79C5
E                    @m38a_lib.M38A
1V8REG_DDR_UGATE     1V8REG_DDR_UGATE - @m38a_lib.M38A   79D6
1V8REG_DDR_VCC5      1V8REG_DDR_VCC5 - @m38a_lib.M38A    79D7
1V8REG_GPU_BOOT      1V8REG_GPU_BOOT - @m38a_lib.M38A    78C6
1V8REG_GPU_BOOT_R    1V8REG_GPU_BOOT_R - @m38a_lib.M38A  78C5
1V8REG_GPU_COMP      1V8REG_GPU_COMP - @m38a_lib.M38A    78B6
1V8REG_GPU_COMP_R    1V8REG_GPU_COMP_R - @m38a_lib.M38A  78B5
1V8REG_GPU_FB        1V8REG_GPU_FB - @m38a_lib.M38A      78B5
1V8REG_GPU_FB_R      1V8REG_GPU_FB_R - @m38a_lib.M38A    78B3
1V8REG_GPU_FS_DIS    1V8REG_GPU_FS_DIS - @m38a_lib.M38A  78B7
1V8REG_GPU_GND       1V8REG_GPU_GND - @m38a_lib.M38A     78B7
1V8REG_GPU_LDO_DR    1V8REG_GPU_LDO_DR - @m38a_lib.M38A  78C7
1V8REG_GPU_LDO_FB    1V8REG_GPU_LDO_FB - @m38a_lib.M38A  78B7
1V8REG_GPU_LGATE     1V8REG_GPU_LGATE - @m38a_lib.M38A   78B6
1V8REG_GPU_PVCC5     1V8REG_GPU_PVCC5 - @m38a_lib.M38A   78C7
1V8REG_GPU_SNUB      1V8REG_GPU_SNUB - @m38a_lib.M38A    78B3
1V8REG_GPU_SWITCHNOD 1V8REG_GPU_SWITCHNODE -         78B5
E                    @m38a_lib.M38A
1V8REG_GPU_UGATE     1V8REG_GPU_UGATE - @m38a_lib.M38A   78C6
1V8REG_GPU_VCC5      1V8REG_GPU_VCC5 - @m38a_lib.M38A    78C7
2V5REG_ITH           2V5REG_ITH - @m38a_lib.M38A         77D2
2V5REG_ITH_RC        2V5REG_ITH_RC - @m38a_lib.M38A      77D2
2V5REG_MODE          2V5REG_MODE - @m38a_lib.M38A        77D3
2V5REG_RT            2V5REG_RT - @m38a_lib.M38A          77D3
2V5REG_SGND          2V5REG_SGND - @m38a_lib.M38A        77C2
2V5REG_SW            2V5REG_SW - @m38a_lib.M38A          77D2
2V5REG_VFB           2V5REG_VFB - @m38a_lib.M38A         77D2
5V_REG_IN            5V_REG_IN - @m38a_lib.M38A          68A4
=I2C_HD_TEMP_SCL     =I2C_HD_TEMP_SCL - @m38a_lib.M38A   59C1 66B6
                     =I2C_ODD_TEMP_SCL - @m38a_lib.M38A  59C1 66B4
                     =SMB_THRM_CLK - @m38a_lib.M38A      10C3 59C1
                     SMB_B_S0_CLK - @m38a_lib.M38A       58B5 59C2 59D1
                     SMB_GPU_NB_THRM_CLK -               59C1 61C3
                     @m38a_lib.M38A
                     SMB_B_S0_CLK - @m38a_lib.M38A       58B5 59C2 59D1
                     =SMB_THRM_CLK - @m38a_lib.M38A      10C3 59C1
                     =I2C_ODD_TEMP_SCL - @m38a_lib.M38A  59C1 66B4
=I2C_HD_TEMP_SDA     =I2C_HD_TEMP_SDA - @m38a_lib.M38A   59C1 66B6
                     =I2C_ODD_TEMP_SDA - @m38a_lib.M38A  59C1 66B4
                     =SMB_THRM_DATA - @m38a_lib.M38A     10C3 59C1
                     SMB_B_S0_DATA - @m38a_lib.M38A      58B5 59C2 59D1
                     SMB_GPU_NB_THRM_DATA -              59C1 61C3
                     @m38a_lib.M38A
                     SMB_B_S0_DATA - @m38a_lib.M38A      58B5 59C2 59D1
                     =SMB_THRM_DATA - @m38a_lib.M38A     10C3 59C1
                     =I2C_ODD_TEMP_SDA - @m38a_lib.M38A  59C1 66B4
=I2C_MEM_SCL         =I2C_MEM_SCL - @m38a_lib.M38A       27D6 28A6 29A6
                     =SMB_AIRPORT_CLK - @m38a_lib.M38A   27D6 53B4
                     SMB_CK410_CLK - @m38a_lib.M38A      27D6 33B6
                     SMB_CLK - @m38a_lib.M38A            23D5 27B8 27D7
                     SMB_CK410_CLK - @m38a_lib.M38A      27D6 33B6
                     =SMB_AIRPORT_CLK - @m38a_lib.M38A   27D6 53B4
=I2C_MEM_SDA         =I2C_MEM_SDA - @m38a_lib.M38A       27D6 28A6 29A6
```

```
                     =SMB_AIRPORT_DATA - @m38a_lib.M38A  27C6 53B4
                     SMB_CK410_DATA - @m38a_lib.M38A     27D6 33B6
                     SMB_DATA - @m38a_lib.M38A           23D5 27B8 27D7
                     SMB_CK410_DATA - @m38a_lib.M38A     27D6 33B6
                     =SMB_AIRPORT_DATA - @m38a_lib.M38A  27C6 53B4
=PP0V9_S0_MEMVTT_LDO =PP0V9_S0_MEMVTT_LDO -              6D4 31B3
                     @m38a_lib.M38A
                     =PP0V9_S0_MEM_TERM - @m38a_lib.M38A 6D4 30D4
                     PP0V9_S0 - @m38a_lib.M38A           6D6 79A3
                     =PP0V9_S0_MEM_TERM - @m38a_lib.M38A 6D4 30D4
=PP1V2_S0_GPU_VDDPLL =PP1V2_S0_GPU_VDDPLL -              88C6 91B8
                     @m38a_lib.M38A
                     =PPVIO_S0_PCIE - @m38a_lib.M38A     84A2 88C6
                     =PP1V2_S0_REG - @m38a_lib.M38A      77A3 88C6
                     =PP1V2_S0_PCIE_GPU_PVDD -           84C8 88D6
                     @m38a_lib.M38A
                     =PP1V2_S0_PCIE_GPU_VDDR -           84C8 88D6
                     @m38a_lib.M38A
                     PP1V2_GPU_IO_S0 - @m38a_lib.M38A    88D8
                     =PPVIO_S0_PCIE - @m38a_lib.M38A     84A2 88C6
                     =PP1V2_S0_REG - @m38a_lib.M38A      77A3 88C6
                     =PP1V2_S0_PCIE_GPU_VDDR -           84C8 88D6
                     @m38a_lib.M38A
                     =PP1V2_S0_PCIE_GPU_PVDD -           84C8 88D6
                     @m38a_lib.M38A
=PP1V2_S3_ENET       =PP1V2_S3_ENET - @m38a_lib.M38A     41A8 41D6 42B5
                     PP1V2_S3_ENET - @m38a_lib.M38A      42B5
=PP1V2_S3_LAN        =PP1V2_S3_LAN - @m38a_lib.M38A      6D3 42B8
                     PP1V2_S3 - @m38a_lib.M38A           6D4 77B3
=PP1V8_S0_FB_VDD     =PP1V8_S0_FB_VDD - @m38a_lib.M38A   88B6 89D5 89D8 90D5 90D8
                     =PP1V8_S0_FB_VDDQ - @m38a_lib.M38A  88B6 89D5 89D8 90D5 90D8
                     =PP1V8R2V0_S0_FB_GPU -              86B8 87A5 87A8 87B5 87B8
                     @m38a_lib.M38A                      88B6
                     PP1V8_S0 - @m38a_lib.M38A           78B2 88B6
                     =PP1V8R3V3_S0_GPU_VDDR5 -           88B6 91B7
                     @m38a_lib.M38A
                     =PP1V8R3V3_S0_GPU_VDDR4 -           88B6 91B7
                     @m38a_lib.M38A
                     PP1V8_S0 - @m38a_lib.M38A           78B2 88B6
                     PP1V8R2V0_S0_FB_GPU -               88B8
                     @m38a_lib.M38A
                     =PP1V8_S0_FB_VDDQ - @m38a_lib.M38A  88B6 89D5 89D8 90D5 90D8
                     =PP1V8R3V3_S0_GPU_VDDR5 -           88B6 91B7
                     @m38a_lib.M38A
                     =PP1V8R3V3_S0_GPU_VDDR4 -           88B6 91B7
                     @m38a_lib.M38A
                     =PP1V8R2V0_S0_FB_GPU -              86B8 87A5 87A8 87B5 87B8
                     @m38a_lib.M38A                      88B6
=PP1V8_S3_MEM_NB     =PP1V8_S3_MEM_NB - @m38a_lib.M38A   6D3 6D3 14C2 16B6 19B8
                                                         19D7
                     =PP1V8_S0_MEMVTT - @m38a_lib.M38A   6D3 31C7
                     PP1V8_S3 - @m38a_lib.M38A           5D2 6D4 79C2
                     =PP1V8_S3_MEM - @m38a_lib.M38A      5C4 6D3 28B2 28C8 28D3
                                                         28D6 29B2 29D3 29D6
                     PP1V8_S3 - @m38a_lib.M38A           5D2 6D4 79C2
                     =PP1V8_S3_MEM - @m38a_lib.M38A      5C4 6D3 28B2 28C8 28D3
                                                         28D6 29B2 29D3 29D6
                     =PP1V8_S0_MEMVTT - @m38a_lib.M38A   6D3 31C7
=PP2V5_S0_NB_VCCA_3G =PP2V5_S0_NB_VCCA_3GBG -            6B4 17D6 19A8 19C7
BG                   @m38a_lib.M38A
                     =PP2V5_S0_GPU - @m38a_lib.M38A      88B6 93C8
                     PP2V5_S0 - @m38a_lib.M38A           6B6 11B8 11C8 77D1 88C8
                     =PP2V5_S0_GPU_VDD25 -               88B6 91C6
                     @m38a_lib.M38A
                     =PP2V5_S0_GPU_VDDC_CT -             88B6 91C6
                     @m38a_lib.M38A
                     =PP2V5_S0_GPU_VDD25 -               88B6 91C6
                     @m38a_lib.M38A
                     =PP2V5_S0_GPU_PVDD - @m38a_lib.M38A 88B6 91A8
                     =PP2V5_S0_GPU - @m38a_lib.M38A      88B6 93C8
=PP2V5_S3_ENET       =PP2V5_S3_ENET - @m38a_lib.M38A     41D5 41D6 42C4
                     PP2V5_S3_ENET - @m38a_lib.M38A      42C4 43D8
=PP3V3_S0_NB         =PP3V3_S0_NB - @m38a_lib.M38A       6A4 14C7 14D6 19C7 20A4
                                                         20B4 20B4
                     =PP3V3_DDC_DVI - @m38a_lib.M38A     88C6 97D2
                     =PP3V3_DDC_LCD - @m38a_lib.M38A     88C6 94A7 94C7
                     =PP3V3_GPU - @m38a_lib.M38A         88C6 94B3
                     PP3V3_S0 - @m38a_lib.M38A           6B6 6D8 10D2 11B8 26B7
                                                         26C6 41D8 59D3 61C3 76D6
                                                         88C8
                     =PP3V3_S0_GPU - @m38a_lib.M38A      6A7 88C6 91D2 93A1 97A5
                                                         97B5
                     =PP3V3_S0_GPU_VDDR3 -               88C6 88D3 91C6
                     @m38a_lib.M38A
                     =PP3V3_S0_LCD - @m38a_lib.M38A      88C6 94C8
                     =PP3V3_S0_2V5REG - @m38a_lib.M38A   6A4 77D4
                     =PP3V3_S0_AIRPORT - @m38a_lib.M38A  6A4 53C2
                     =PP3V3_S0_PCI - @m38a_lib.M38A      6A4 44D5
                     =PP3V3_S0_AUDIO - @m38a_lib.M38A    6A4 68A5 68D7 72A6 72C8
                                                         72D5 73B8 74B5 74C5 74D6
                     =PP3V3_S0_IMVP - @m38a_lib.M38A     6A4 75D8
                     =PP3V3_S0_CK410 - @m38a_lib.M38A    6A4 33C8 33D3 33D8 34D4
                     =PPSPD_S0_MEM - @m38a_lib.M38A      6A4 28A7 29A3 29A7
                     =PP3V3_S0_TPM - @m38a_lib.M38A      6A4 67C7 67D4
                     =PP3V3_S0_SB_3V3_1V5_VCCHDA -       6A4 24C3 25C4
                     @m38a_lib.M38A
                     =PP3V3_S0_ODD_TSENS -               6A4 66B4
                     @m38a_lib.M38A
                     =PP3V3_S0_HD_TSENS - @m38a_lib.M38A 6B4 66B5
                     =PP3V3_S0_FAN - @m38a_lib.M38A      6B4 59A8 59B7 65B7 65C7
                                                         66C7
                     =PP3V3_S0_PATA - @m38a_lib.M38A     6B4 38D3
                     =PP3V3_S0_SB_PM - @m38a_lib.M38A    6B4 26D4
                     =PP3V3_S0_SB_PCI - @m38a_lib.M38A   6B4 26D1
                     =PP3V3_S0_SB_VCC3_3_IDE -           6B4 24C3 25B3
                     @m38a_lib.M38A
                     =PP3V3_S0_SB_VCC3_3_PCI -           6B4 24B3 25A3
                     @m38a_lib.M38A
                     =PP3V3_S0_SB_VCC3_3 -               6B4 24B5 24B5 25B8 25C6
                     @m38a_lib.M38A
                     =PP3V3_S0_NB_VCC_HV -               6B4 17C6 19A8 19C7
                     @m38a_lib.M38A
                     =PP3V3_S0_SB_GPIO - @m38a_lib.M38A  6B4 21C3 21D3 23B3 23D5
                     =PP3V3_S0_SB_VCCLAN3_3 -            6A4 24D3 25D3
                     @m38a_lib.M38A
                     =PP3V3_S0_SB - @m38a_lib.M38A       6B4 22B5 25D8 27C6
                     PP3V3_S0 - @m38a_lib.M38A           6B6 6D8 10D2 11B8 26B7
                                                         26C6 41D8 59D3 61C3 76D6
                                                         88C8
                     =PPSPD_S0_MEM - @m38a_lib.M38A      6A4 28A7 29A3 29A7
```

```
                     =PP3V3_S0_TPM - @m38a_lib.M38A      6A4 67C7 67D4
                     =PP3V3_S0_SB_VCCLAN3_3 -            6A4 24D3 25D3
                     @m38a_lib.M38A
                     =PP3V3_S0_SB_VCC3_3_PCI -           6B4 24B3 25A3
                     @m38a_lib.M38A
                     =PP3V3_S0_SB_VCC3_3_IDE -           6B4 24C3 25B3
                     @m38a_lib.M38A
                     =PP3V3_S0_SB_VCC3_3 -               6B4 24B5 24B5 25B8 25C6
                     @m38a_lib.M38A
                     =PP3V3_S0_SB_PM - @m38a_lib.M38A    6B4 26D4
                     =PP3V3_S0_SB_PCI - @m38a_lib.M38A   6B4 26D1
                     =PP3V3_S0_SB_GPIO - @m38a_lib.M38A  6B4 21C3 21D3 23B3 23D5
                     =PP3V3_S0_SB_3V3_1V5_VCCHDA -       6A4 24C3 25C4
                     @m38a_lib.M38A
                     =PP3V3_S0_SB - @m38a_lib.M38A       6B4 22B5 25D8 27C6
                     =PP3V3_S0_PCI - @m38a_lib.M38A      6A4 44D5
                     =PP3V3_S0_PATA - @m38a_lib.M38A     6B4 38D3
                     =PP3V3_S0_ODD_TSENS -               6A4 66B4
                     @m38a_lib.M38A
                     =PP3V3_S0_NB_VCC_HV -               6B4 17C6 19A8 19C7
                     @m38a_lib.M38A
                     =PP3V3_S0_NB_TVDAC - @m38a_lib.M38A 6B4 19C7
                     =PP3V3_S0_NB_PM - @m38a_lib.M38A    6B4
                     =PP3V3_S0_LCD - @m38a_lib.M38A      88C6 94C8
                     =PP3V3_S0_IMVP - @m38a_lib.M38A     6A4 75D8
                     =PP3V3_S0_HD_TSENS - @m38a_lib.M38A 6B4 66B5
                     =PP3V3_S0_GPU_CLOCKS -              88C6
                     @m38a_lib.M38A
                     =PP3V3_S0_GPUBBP - @m38a_lib.M38A   88C6
                     =PP3V3_S0_GPUBBN - @m38a_lib.M38A   88C6
                     =PP3V3_S0_GPUBBCTL - @m38a_lib.M38A 88C6
                     =PP3V3_S0_GPU - @m38a_lib.M38A      6A7 88C6 91D2 93A1 97A5
                                                         97B5
                     =PP3V3_S0_FAN - @m38a_lib.M38A      6B4 59A8 59B7 65B7 65C7
                                                         66C7
                     =PP3V3_S0_CK410 - @m38a_lib.M38A    6A4 33C8 33D3 33D8 34D4
                     =PP3V3_S0_AUDIO - @m38a_lib.M38A    6A4 68A5 68D7 72A6 72C8
                                                         72D5 73B8 74B5 74C5 74D6
                     =PP3V3_S0_AIRPORT - @m38a_lib.M38A  6A4 53C2
                     =PP3V3_S0_2V5REG - @m38a_lib.M38A   6A4 77D4
                     =PP3V3_GPU - @m38a_lib.M38A         88C6 94B3
                     =PP3V3_DDC_LCD - @m38a_lib.M38A     88C6 94A7 94C7
                     =PP3V3_DDC_DVI - @m38a_lib.M38A     88C6 97D2
=PP3V3_S3_1V2REG     =PP3V3_S3_1V2REG - @m38a_lib.M38A   6D3 77C7
                     PP3V3_S3 - @m38a_lib.M38A           6A7 6D4 53C4 59C8 59D3
                                                         83B3
                     =PP3V3_S3_BT - @m38a_lib.M38A       6D3 47B2
                     =PP3V3_S3_TPM - @m38a_lib.M38A      6D3 67C2
                     =PP3V3_S3_ENET - @m38a_lib.M38A     6D3 41A5 41B3 41C3 41D6
                                                         41D8 42D8
                     PP3V3_S3 - @m38a_lib.M38A           6A7 6D4 53C4 59C8 59D3
                                                         83B3
                     =PP3V3_S3_VGASYNC - @m38a_lib.M38A  6C3
                     =PP3V3_S3_USB - @m38a_lib.M38A      6C3
                     =PP3V3_S3_TPM - @m38a_lib.M38A      6D3 67C2
                     =PP3V3_S3_ENET - @m38a_lib.M38A     6D3 41A5 41B3 41C3 41D6
                                                         41D8 42D8
                     =PP3V3_S3_BT - @m38a_lib.M38A       6D3 47B2
=PP3V3_S5_DEBUG      =PP3V3_S5_DEBUG - @m38a_lib.M38A    6D1 60D4
                     =PP3V3_S5_ROM - @m38a_lib.M38A      6D1 63D4
                     PP3V3_S5 - @m38a_lib.M38A           5D2 6A8 6C8 6D2 6D8 6D8
                                                         11D8 26C1 26C4 26C4 59A8
                                                         65B7 65D7 66D7 76D2 77C8
                                                         77D5 77D6 77D6 77D8 79A3
                                                         79A5 79B3 80A5 80B3 81A5
                                                         81A5 83C3
                     =PP3V3_S5_SMC - @m38a_lib.M38A      6D1 58C2 58D3 58D4 59A4
                                                         59A5 59C4 59D3 59D8
                     =PP3V3_S5_FW - @m38a_lib.M38A       6D1 44A6 44B2 44D5 44D7
                                                         45D6 46A8
                     =PP3V3_S5_SB_IO - @m38a_lib.M38A    6D1 22C6 27C6
                     =PP3V3_S5_SB_3V3_1V5_VCCSUSHDA -    6D1 24C3
                     @m38a_lib.M38A
                     =PP3V3_S5_SB_VCCSUS3_3_USB -        6D1 24B3 25D1
                     @m38a_lib.M38A
                     =PP3V3_S5_SB_VCCSUS3_3 -            6D1 24A5 24B3 25B6 25D1
                     @m38a_lib.M38A
                     =PP3V3_S5_SB_PM - @m38a_lib.M38A    6D1 11B5 23D1
                     =PP3V3_S5_SB_USB - @m38a_lib.M38A   6D1 22D8
                     =PP3V3_S5_SB - @m38a_lib.M38A       6D1 23A7 23B3 23B7 23D4
                                                         23D8 25C8 26D8
                     PP3V3_S5 - @m38a_lib.M38A           5D2 6A8 6C8 6D2 6D8 6D8
                                                         11D8 26C1 26C4 26C4 59A8
                                                         65B7 65D7 66D7 76D2 77C8
                                                         77D5 77D6 77D6 77D8 79A3
                                                         79A5 79B3 80A5 80B3 81A5
                                                         81A5 83C3
                     =PP3V3_S5_SMC - @m38a_lib.M38A      6D1 58C2 58D3 58D4 59A4
                                                         59A5 59C4 59D3 59D8
                     =PP3V3_S5_SB_VCCSUS3_3_USB -        6D1 24B3 25D1
                     @m38a_lib.M38A
                     =PP3V3_S5_SB_VCCSUS3_3 -            6D1 24A5 24B3 25B6 25D1
                     @m38a_lib.M38A
                     =PP3V3_S5_SB_USB - @m38a_lib.M38A   6D1 22D8
                     =PP3V3_S5_SB_PM - @m38a_lib.M38A    6D1 11B5 23D1
                     =PP3V3_S5_SB_IO - @m38a_lib.M38A    6D1 22C6 27C6
                     =PP3V3_S5_SB_3V3_1V5_VCCSUSHDA -    6D1 24C3
                     @m38a_lib.M38A
                     =PP3V3_S5_SB - @m38a_lib.M38A       6D1 23A7 23B3 23B7 23D4
                                                         23D8 25C8 26D8
                     =PP3V3_S5_ROM - @m38a_lib.M38A      6D1 63D4
                     =PP3V3_S5_FW - @m38a_lib.M38A       6D1 44A6 44B2 44D5 44D7
                                                         45D6 46A8
=PP5V_S0_AUDIO       =PP5V_S0_AUDIO - @m38a_lib.M38A     6A4 68A5
                     PP5V_S0_AUDIO - @m38a_lib.M38A      6A5
=PP5V_S0_DEBUG       =PP5V_S0_DEBUG - @m38a_lib.M38A     6A4 60D4
                     =PP5V_S0_DVI_DDC - @m38a_lib.M38A   88A6 97D6
                     =PP5V_S0_GPUISENS - @m38a_lib.M38A  85D2 88A6
                     PP5V_S0 - @m38a_lib.M38A            6A6 6D8 75D7 88B8 97D3
                     =PP5V_S0_SB - @m38a_lib.M38A        6A4 25D8
                     =PP5V_S0_PATA - @m38a_lib.M38A      6A4 38C4 38D3
                     PP5V_S0 - @m38a_lib.M38A            6A6 6D8 75D7 88B8 97D3
                     =PP5V_S0_SB - @m38a_lib.M38A        6A4 25D8
                     =PP5V_S0_PATA - @m38a_lib.M38A      6A4 38C4 38D3
                     =PP5V_S0_GPUISENS - @m38a_lib.M38A  85D2 88A6
                     =PP5V_S0_GPUBBCTL - @m38a_lib.M38A  88B6
                     =PP5V_S0_DVI_DDC - @m38a_lib.M38A   88A6 97D6
=PP5V_S0_GPUVCORE    =PP5V_S0_GPUVCORE - @m38a_lib.M38A  85D7 88D6
                     GPUVCORE_VCC - @m38a_lib.M38A       88D6
=PP5V_S0_MEMVTT      =PP5V_S0_MEMVTT - @m38a_lib.M38A    6C3 31C6
                     PP5V_S3 - @m38a_lib.M38A            6C4 60B6 83C3
                     =PP5V_S3_BNDI - @m38a_lib.M38A      6C3 47D3
                     =PP5V_S3_USB - @m38a_lib.M38A       6C3 47C8
                     PP5V_S3 - @m38a_lib.M38A            6C4 60B6 83C3
```

```
                     =PP5V_S3_USB - @m38a_lib.M38A       6C3 47C8
                     =PP5V_S3_BNDI - @m38a_lib.M38A      6C3 47D3
=PP5V_S5_SB          =PP5V_S5_SB - @m38a_lib.M38A        6D1 25C8
                     PP5V_S5 - @m38a_lib.M38A            5D2 6D2 6D7 59A5 79B3
                                                         79B3 80B3 81B3 83C3
=PP12V_GPU           =PP12V_GPU - @m38a_lib.M38A         88B6 94C3 94D7
                     PP12V_S0 - @m38a_lib.M38A           6A6 6D8 88B8
                     =PP12V_S0_FAN - @m38a_lib.M38A      6A4 65B6 65D7 66D6
                     PP12V_S0 - @m38a_lib.M38A           6A6 6D8 88B8
                     =PP12V_S0_FAN - @m38a_lib.M38A      6A4 65B6 65D7 66D6
=PP12V_S0_AUDIO_SPKR =PP12V_S0_AUDIO_SPKRAMP -           6A4 72D8
AMP                  @m38a_lib.M38A
                     PP12V_S0_AUDIO_SPKRAMP -            6A5
                     @m38a_lib.M38A
=PP12V_S5_CPU        =PP12V_S5_CPU - @m38a_lib.M38A      6C1 76D8
                     =PPVIN_S0_GPUVCORE - @m38a_lib.M38A 85D7 88B6
                     PP12V_S5 - @m38a_lib.M38A           5D2 6C2 6D7 11A8 11C7
                                                         11D7 77C8 77D8 78C7 79D7
                                                         80D7 81D7 83C5 83C5 88B8
                     =PP12V_S5_FW - @m38a_lib.M38A       6C1 46D7
                     PP12V_S5 - @m38a_lib.M38A           5D2 6C2 6D7 11A8 11C7
                                                         11D7 77C8 77D8 78C7 79D7
                                                         80D7 81D7 83C5 83C5 88B8
                     =PPVIN_S0_GPUVCORE - @m38a_lib.M38A 85D7 88B6
                     =PP12V_S5_FW - @m38a_lib.M38A       6C1 46D7
=PP12V_S5_FW_PHY     =PP12V_S5_FW_PHY - @m38a_lib.M38A   44C2 46D5
                     PP12V_FW - @m38a_lib.M38A           46D6
=PPBB_S0_GPU         =PPBB_S0_GPU - @m38a_lib.M38A       86D6 88C6
                     =PPVCORE_S0_GPU - @m38a_lib.M38A    86D8 88D6 91A7
                     PP1V0R1V2_S0_GPU - @m38a_lib.M38A   59B4 88D8
                     =PPVCORE_S0_GPU_REG -               85C1 88D6
                     @m38a_lib.M38A
                     PPBB_S0_GPU - @m38a_lib.M38A        88C8
                     PP1V0R1V2_S0_GPU - @m38a_lib.M38A   59B4 88D8
                     =PPVOUT_S0_GPUBBP_LDO -             85A6 88C6
                     @m38a_lib.M38A
                     =PPVCORE_S0_GPU_REG -               85C1 88D6
                     @m38a_lib.M38A
                     =PPVCORE_S0_GPU_BBP -               85A8 88D6
                     @m38a_lib.M38A
                     =PPVCORE_S0_GPU - @m38a_lib.M38A    86D8 88D6 91A7
=PPVCORE_S0_CPU      =PPVCORE_S0_CPU - @m38a_lib.M38A    6D4 8B6 8D7 8D8 9B8
                     PPVCORE_CPU - @m38a_lib.M38A        5D2 6D6 75A4 75D1 76B3
ACZ_BITCLK           ACZ_BITCLK - @m38a_lib.M38A         21C7 68D7
ACZ_RST_L            ACZ_RST_L - @m38a_lib.M38A          21C7 68C7
ACZ_SDATAIN<0>       ACZ_SDATAIN<0> - @m38a_lib.M38A     21C7 68D7
ACZ_SDATAIN_CHIP     ACZ_SDATAIN_CHIP - @m38a_lib.M38A   68C6
ACZ_SDATAOUT         ACZ_SDATAOUT - @m38a_lib.M38A       21C7 68D7
ACZ_SYNC             ACZ_SYNC - @m38a_lib.M38A           21C7 68D7
AIRPORT_CLK100M_PCIE AIRPORT_CLK100M_PCIE_N -            34B4 34C2 53C6
_N                   @m38a_lib.M38A
AIRPORT_CLK100M_PCIE AIRPORT_CLK100M_PCIE_P -            34B4 34C2 53C6
_P                   @m38a_lib.M38A
AIRPORT_CONN_CLK     AIRPORT_CONN_CLK - @m38a_lib.M38A   53B5
AIRPORT_CONN_DATA    AIRPORT_CONN_DATA - @m38a_lib.M38A  53B5
AIRPORT_RST_L        AIRPORT_RST_L - @m38a_lib.M38A      6B7 53C5
AIRPORT_WAKE_L       AIRPORT_WAKE_L - @m38a_lib.M38A     53C6
ALL_SYS_PWRGD        ALL_SYS_PWRGD - @m38a_lib.M38A      26D5 58D7 77D4
ALS_GAIN             ALS_GAIN - @m38a_lib.M38A           58B5 59C6
                     NC_ALS_GAIN - @m38a_lib.M38A        59C5
ALS_LEFT             ALS_LEFT - @m38a_lib.M38A           58A7 59D5
                     TP_ALS_LEFT - @m38a_lib.M38A        59D3
ALS_RIGHT            ALS_RIGHT - @m38a_lib.M38A          58A7 59D5
                     TP_ALS_RIGHT - @m38a_lib.M38A       59D3
ATI_DVPCLK           ATI_DVPCLK - @m38a_lib.M38A         91C3 95A6
                     TP_ATI_DVPCLK - @m38a_lib.M38A      95A8
ATI_DVPCNTL<0>       ATI_DVPCNTL<0> - @m38a_lib.M38A     91C3 95A6
ATI_DVPCNTL<1>       ATI_DVPCNTL<1> - @m38a_lib.M38A     91B3 95A6
ATI_DVPCNTL<2>       ATI_DVPCNTL<2> - @m38a_lib.M38A     91B3 95A6
ATI_DVPDATA<0>       ATI_DVPDATA<0> - @m38a_lib.M38A     91B3 95B6
ATI_DVPDATA<1>       ATI_DVPDATA<1> - @m38a_lib.M38A     91B3 95B6
ATI_DVPDATA<2>       ATI_DVPDATA<2> - @m38a_lib.M38A     91B3 95B6
ATI_DVPDATA<3>       ATI_DVPDATA<3> - @m38a_lib.M38A     91B3 95B6
ATI_DVPDATA<4>       ATI_DVPDATA<4> - @m38a_lib.M38A     91B3 95B6
ATI_DVPDATA<5>       ATI_DVPDATA<5> - @m38a_lib.M38A     91B3 95B6
ATI_DVPDATA<6>       ATI_DVPDATA<6> - @m38a_lib.M38A     91B3 95B6
ATI_DVPDATA<7>       ATI_DVPDATA<7> - @m38a_lib.M38A     91B3 95B6
ATI_DVPDATA<8>       ATI_DVPDATA<8> - @m38a_lib.M38A     91B3 95B6
ATI_DVPDATA<9>       ATI_DVPDATA
```

AUD_GPIO_1	AUD_GPIO_1 - @m38a_lib.M38A	68C7 74C5	
AUD_GPIO_2	AUD_GPIO_2 - @m38a_lib.M38A	68B7 68C7	
AUD_LI_DET_EMI	AUD_LI_DET_EMI - @m38a_lib.M38A	73D6	
AUD_LI_DET_H	AUD_LI_DET_H - @m38a_lib.M38A	73D4 74D6	
AUD_LI_DET_JACK	AUD_LI_DET_JACK - @m38a_lib.M38A	73D7	
AUD_LI_GND_EMI	AUD_LI_GND_EMI - @m38a_lib.M38A	73D6	
AUD_LI_GND_JACK	AUD_LI_GND_JACK - @m38a_lib.M38A	73D7	
AUD_LI_L	AUD_LI_L - @m38a_lib.M38A	73D4 74C5	
AUD_LI_L_EMI	AUD_LI_L_EMI - @m38a_lib.M38A	73D6	
AUD_LI_L_JACK	AUD_LI_L_JACK - @m38a_lib.M38A	73D7	
AUD_LI_R	AUD_LI_R - @m38a_lib.M38A	73D4 74C5	
AUD_LI_R_EMI	AUD_LI_R_EMI - @m38a_lib.M38A	73D6	
AUD_LI_R_JACK	AUD_LI_R_JACK - @m38a_lib.M38A	73D7	
AUD_LO_DET1_1	AUD_LO_DET1_1 - @m38a_lib.M38A	74A4 74B2	
AUD_LO_DET1_INV	AUD_LO_DET1_INV - @m38a_lib.M38A	74B3	
AUD_LO_DET2_1	AUD_LO_DET2_1 - @m38a_lib.M38A	74B4	
AUD_LO_GND_JACK	AUD_LO_GND_JACK - @m38a_lib.M38A	73B4	
AUD_LO_L	AUD_LO_L - @m38a_lib.M38A	73B8 74B5	
AUD_LO_L_EMI	AUD_LO_L_EMI - @m38a_lib.M38A	73B7	
AUD_LO_L_JACK	AUD_LO_L_JACK - @m38a_lib.M38A	73B4	
AUD_LO_R	AUD_LO_R - @m38a_lib.M38A	73A8 74B5	
AUD_LO_R_EMI	AUD_LO_R_EMI - @m38a_lib.M38A	73A7	
AUD_LO_R_JACK	AUD_LO_R_JACK - @m38a_lib.M38A	73B4	
AUD_LO_TIP	AUD_LO_TIP - @m38a_lib.M38A	73B8 74B5	
AUD_LO_TIP_EMI	AUD_LO_TIP_EMI - @m38a_lib.M38A	73B7	
AUD_LO_TIP_JACK	AUD_LO_TIP_JACK - @m38a_lib.M38A	73B4	
AUD_LO_TYPE	AUD_LO_TYPE - @m38a_lib.M38A	73B8 74A5	
AUD_LO_TYPE_EMI	AUD_LO_TYPE_EMI - @m38a_lib.M38A	73B7	
AUD_LO_TYPE_JACK	AUD_LO_TYPE_JACK - @m38a_lib.M38A	73B4	
AUD_MAX9714_CHOLD	AUD_MAX9714_CHOLD - @m38a_lib.M38A	72C4	
AUD_MAX9714_VREG	AUD_MAX9714_VREG - @m38a_lib.M38A	72C5	
AUD_MIC_INTERCON	AUD_MIC_INTERCON - @m38a_lib.M38A	74A4	
AUD_MIC_IN_N	AUD_MIC_IN_N - @m38a_lib.M38A	73C4 74A6	
AUD_MIC_IN_N_CONN	AUD_MIC_IN_N_CONN - @m38a_lib.M38A	47C2 73C2	
AUD_MIC_IN_N_EMI	AUD_MIC_IN_N_EMI - @m38a_lib.M38A	73C3	
AUD_MIC_IN_P	AUD_MIC_IN_P - @m38a_lib.M38A	73C4 74A6	
AUD_MIC_IN_P_CONN	AUD_MIC_IN_P_CONN - @m38a_lib.M38A	47C2 73C2	
AUD_MIC_IN_P_EMI	AUD_MIC_IN_P_EMI - @m38a_lib.M38A	73C3	
AUD_MIC_P1	AUD_MIC_P1 - @m38a_lib.M38A	74A4	
AUD_NC_40	AUD_NC_40 - @m38a_lib.M38A	68C4	
AUD_NC_43	AUD_NC_43 - @m38a_lib.M38A	68B4	
AUD_PORT_A_DET_L	AUD_PORT_A_DET_L - @m38a_lib.M38A	74B2	
AUD_PORT_A_L1	AUD_PORT_A_L1 - @m38a_lib.M38A	74B7 74C4 74D4	
AUD_PORT_A_L2	AUD_PORT_A_L2 - @m38a_lib.M38A	74B7 74C3 74D3	
AUD_PORT_A_R1	AUD_PORT_A_R1 - @m38a_lib.M38A	74B7 74C4 74D4	
AUD_PORT_A_R2	AUD_PORT_A_R2 - @m38a_lib.M38A	74B7 74C3 74D3	
AUD_PORT_E_DET_L	AUD_PORT_E_DET_L - @m38a_lib.M38A	74B1	
AUD_PORT_F_DET_L	AUD_PORT_F_DET_L - @m38a_lib.M38A	74D4	
AUD_PORT_F_L1	AUD_PORT_F_L1 - @m38a_lib.M38A	74C7	
AUD_PORT_F_R1	AUD_PORT_F_R1 - @m38a_lib.M38A	74C7	
AUD_SAMP_FS1	AUD_SAMP_FS1 - @m38a_lib.M38A	72A6 72C5	
AUD_SAMP_FS2	AUD_SAMP_FS2 - @m38a_lib.M38A	72A6 72C5	
AUD_SAMP_G1	AUD_SAMP_G1 - @m38a_lib.M38A	72A6 72C5	
AUD_SAMP_G2	AUD_SAMP_G2 - @m38a_lib.M38A	72A6 72C5	
AUD_SAMP_INL_N	AUD_SAMP_INL_N - @m38a_lib.M38A	72C5	
AUD_SAMP_INL_P	AUD_SAMP_INL_P - @m38a_lib.M38A	72C5	
AUD_SAMP_INR_N	AUD_SAMP_INR_N - @m38a_lib.M38A	72C5	
AUD_SAMP_INR_P	AUD_SAMP_INR_P - @m38a_lib.M38A	72C5	
AUD_SAMP_SHDN_L	AUD_SAMP_SHDN_L - @m38a_lib.M38A	72C5	
AUD_SENSE_A	AUD_SENSE_A - @m38a_lib.M38A	68C1 74C5 74D7	
AUD_SENSE_B	AUD_SENSE_B - @m38a_lib.M38A	68C1 74C5 74D6 74D7	
AUD_SPDIFIN_JACK	AUD_SPDIFIN_JACK - @m38a_lib.M38A	73D7	
AUD_SPDIF_GND_IN	AUD_SPDIF_GND_IN - @m38a_lib.M38A	73C7	
AUD_SPDIF_GND_OUT	AUD_SPDIF_GND_OUT - @m38a_lib.M38A	73A3	
AUD_SPDIF_IN	AUD_SPDIF_IN - @m38a_lib.M38A	68C1 73D4	
AUD_SPDIF_OUT	AUD_SPDIF_OUT - @m38a_lib.M38A	68D1 73B8	
AUD_SPDIF_OUT_CHIP	AUD_SPDIF_OUT_CHIP - @m38a_lib.M38A	68D4	
AUD_SPKR_OUTL_N	AUD_SPKR_OUTL_N - @m38a_lib.M38A	72C1 73D2	
AUD_SPKR_OUTL_P	AUD_SPKR_OUTL_P - @m38a_lib.M38A	72C1 73D2	
AUD_SPKR_OUTR_N	AUD_SPKR_OUTR_N - @m38a_lib.M38A	72C1 73D2	
AUD_SPKR_OUTR_P	AUD_SPKR_OUTR_P - @m38a_lib.M38A	72C1 73D2	
AUD_TYPE_DET_EN	AUD_TYPE_DET_EN - @m38a_lib.M38A	74B3	
AUD_VREF_FILT	AUD_VREF_FILT - @m38a_lib.M38A	68C4	
AUD_VREF_PORT_B	AUD_VREF_PORT_B - @m38a_lib.M38A	68C1 74A2	
BAL_IN_COM	BAL_IN_COM - @m38a_lib.M38A	68C7 74A7	
BAL_IN_L	BAL_IN_L - @m38a_lib.M38A	68C7 74A7	
BAL_IN_R	BAL_IN_R - @m38a_lib.M38A	68C7 74A7	
BAT_1	BAT_1 - @m38a_lib.M38A	26C8	
BAT_2	BAT_2 - @m38a_lib.M38A	26C8	
BEEP	BEEP - @m38a_lib.M38A	68C6	
BIOS_REC	BIOS_REC - @m38a_lib.M38A	23A6 23C5	
BOOT_LPC_SPI_L	BOOT_LPC_SPI_L - @m38a_lib.M38A	22B3 58C7 60C4	
C8509_P1	C8509_P1 - @m38a_lib.M38A	85C5	
CK410_27M_NONSPREAD	CK410_27M_NONSPREAD - @m38a_lib.M38A	34A4 92C7	
CK410_27M_SPREAD	CK410_27M_SPREAD - @m38a_lib.M38A	34A4 92C5	
	GPU_GPIO_16 - @m38a_lib.M38A	91C3 92C3	
CK410_CLK14P3M_TIMER	CK410_CLK14P3M_TIMER - @m38a_lib.M38A	33A4 34D6	
CK410_CPU0_N	CK410_CPU0_N - @m38a_lib.M38A	33C4 34B6	
CK410_CPU0_P	CK410_CPU0_P - @m38a_lib.M38A	33C4 34B6	
CK410_CPU1_N	CK410_CPU1_N - @m38a_lib.M38A	33C4 34B6	
CK410_CPU1_P	CK410_CPU1_P - @m38a_lib.M38A	33C4 34B6	
CK410_CPU2_ITP_SRC10_N	CK410_CPU2_ITP_SRC10_N - @m38a_lib.M38A	33C4 34B6	
CK410_CPU2_ITP_SRC10_P	CK410_CPU2_ITP_SRC10_P - @m38a_lib.M38A	33C4 34B6	
CK410_DOT96_27M_NONSPREAD_P	CK410_DOT96_27M_NONSPREAD_P - @m38a_lib.M38A	33A4 34A6	
CK410_DOT96_27M_SPREAD_N	CK410_DOT96_27M_SPREAD_N - @m38a_lib.M38A	33A4 34A6	
CK410_FSA	CK410_FSA - @m38a_lib.M38A	34B8 34C4	
CK410_FSB_TEST_MODE	CK410_FSB_TEST_MODE - @m38a_lib.M38A	33C6 34A8	
CK410_FSC	CK410_FSC - @m38a_lib.M38A	34A8 34D4	
CK410_IREF	CK410_IREF - @m38a_lib.M38A	33B6	
CK410_LVDS_N	CK410_LVDS_N - @m38a_lib.M38A	33B4 34A6	
	TP_CK410_LVDS_N - @m38a_lib.M38A	34A4	
CK410_LVDS_P	CK410_LVDS_P - @m38a_lib.M38A	33B4 34A6	
	TP_CK410_LVDS_P - @m38a_lib.M38A	34A4	
CK410_PCI1_CLK	CK410_PCI1_CLK - @m38a_lib.M38A	33B6 34C6	
CK410_PCI2_CLK	CK410_PCI2_CLK - @m38a_lib.M38A	33B6 34C6	
CK410_PCI3_CLK	CK410_PCI3_CLK - @m38a_lib.M38A	33B6 34C6	
CK410_PCI4_CLK	CK410_PCI4_CLK - @m38a_lib.M38A	33B6 34C6	
CK410_PCI5_FCTSEL1	CK410_PCI5_FCTSEL1 - @m38a_lib.M38A	33B6 34D6	
CK410_PCIF0_CLK	CK410_PCIF0_CLK - @m38a_lib.M38A	33B8 34B6	
CK410_PCIF1_ITP_EN	CK410_PCIF1_ITP_EN - @m38a_lib.M38A	33B8 34B6	
CK410_PD_VTT_PWRGD_L	CK410_PD_VTT_PWRGD_L - @m38a_lib.M38A	26A8 33A4	
	VR_PWRGD_CK410_L - @m38a_lib.M38A	26A7 75C6	
CK410_REF1_FCTSEL0	CK410_REF1_FCTSEL0 - @m38a_lib.M38A	33A4 34C6	
CK410_SRC1_N	CK410_SRC1_N - @m38a_lib.M38A	33B4 34A6	
CK410_SRC1_P	CK410_SRC1_P - @m38a_lib.M38A	33B4 34A6	
CK410_SRC2_N	CK410_SRC2_N - @m38a_lib.M38A	33B4 34A6	

CK410_SRC2_P	CK410_SRC2_P - @m38a_lib.M38A	33B4 34A6
CK410_SRC3_N	CK410_SRC3_N - @m38a_lib.M38A	33B4 34D3
CK410_SRC3_P	CK410_SRC3_P - @m38a_lib.M38A	33B4 34D3
CK410_SRC4_N	CK410_SRC4_N - @m38a_lib.M38A	33B4 34B6
CK410_SRC4_P	CK410_SRC4_P - @m38a_lib.M38A	33B4 34B6
CK410_SRC5_N	CK410_SRC5_N - @m38a_lib.M38A	33B4 34B6
CK410_SRC5_P	CK410_SRC5_P - @m38a_lib.M38A	33B4 34B6
CK410_SRC6_N	CK410_SRC6_N - @m38a_lib.M38A	33B4 34B6
CK410_SRC6_P	CK410_SRC6_P - @m38a_lib.M38A	33B4 34B6
CK410_SRC7_N	CK410_SRC7_N - @m38a_lib.M38A	33B4 34D3
CK410_SRC7_P	CK410_SRC7_P - @m38a_lib.M38A	33B4 34D3
CK410_SRC8_N	CK410_SRC8_N - @m38a_lib.M38A	33A4 34A6
CK410_SRC8_P	CK410_SRC8_P - @m38a_lib.M38A	33A4 34A6
CK410_SRC_CLKREQ1_L	CK410_SRC_CLKREQ1_L - @m38a_lib.M38A	33B4 34D8
CK410_SRC_CLKREQ3_L	CK410_SRC_CLKREQ3_L - @m38a_lib.M38A	33B4 34D8
CK410_SRC_CLKREQ6_L	CK410_SRC_CLKREQ6_L - @m38a_lib.M38A	33B4 53C6
CK410_SRC_CLKREQ8_L	CK410_SRC_CLKREQ8_L - @m38a_lib.M38A	33A4 34D8
CK410_USB48_FSA	CK410_USB48_FSA - @m38a_lib.M38A	33A4 34C6
CK410_XTAL_IN	CK410_XTAL_IN - @m38a_lib.M38A	33C6
CK410_XTAL_OUT	CK410_XTAL_OUT - @m38a_lib.M38A	33C6
CLK_NB_OE_L	CLK_NB_OE_L - @m38a_lib.M38A	14B6 33B4
CPU_A20M_L	CPU_A20M_L - @m38a_lib.M38A	5C8 7C7 21C4
CPU_BSEL<0>	CPU_BSEL<0> - @m38a_lib.M38A	7B4 34B8
CPU_BSEL<1>	CPU_BSEL<1> - @m38a_lib.M38A	7B4 34A8
CPU_BSEL<2>	CPU_BSEL<2> - @m38a_lib.M38A	7B4 34A8
CPU_COMP<0>	CPU_COMP<0> - @m38a_lib.M38A	7B2
CPU_COMP<1>	CPU_COMP<1> - @m38a_lib.M38A	7B2
CPU_COMP<2>	CPU_COMP<2> - @m38a_lib.M38A	7B2
CPU_COMP<3>	CPU_COMP<3> - @m38a_lib.M38A	7B2
CPU_DCIN_SENSE	CPU_DCIN_SENSE - @m38a_lib.M38A	76D7
CPU_DCIN_SENSE_R	CPU_DCIN_SENSE_R - @m38a_lib.M38A	76C7
CPU_DPRSTP_L	CPU_DPRSTP_L - @m38a_lib.M38A	7B3 21C4 75C6
CPU_DPSLP_L	CPU_DPSLP_L - @m38a_lib.M38A	7B3 21C4
CPU_FERR_L	CPU_FERR_L - @m38a_lib.M38A	7C7 21C2
CPU_GTLREF	CPU_GTLREF - @m38a_lib.M38A	5D4 7B4
CPU_HS_ZH607	CPU_HS_ZH607 - @m38a_lib.M38A	9D4
CPU_HS_ZH608	CPU_HS_ZH608 - @m38a_lib.M38A	9D3 66A4 66A6 66B4 66B6
CPU_HS_ZH609	CPU_HS_ZH609 - @m38a_lib.M38A	9D3
CPU_HS_ZH610	CPU_HS_ZH610 - @m38a_lib.M38A	9D2
CPU_IGNNE_L	CPU_IGNNE_L - @m38a_lib.M38A	5C8 7C7 21C4
CPU_INIT_L	CPU_INIT_L - @m38a_lib.M38A	5C8 7D6 21C4
CPU_INTR	CPU_INTR - @m38a_lib.M38A	5C8 7C7 21C4
CPU_NMI	CPU_NMI - @m38a_lib.M38A	5C8 7C7 21C4
CPU_PROCHOT_L	CPU_PROCHOT_L - @m38a_lib.M38A	7C6 59A8 59C7
CPU_PSI_L	CPU_PSI_L - @m38a_lib.M38A	7A3 75C6
CPU_PWRGD	CPU_PWRGD - @m38a_lib.M38A	7B3 21C4
CPU_RCIN_L	CPU_RCIN_L - @m38a_lib.M38A	21C4
CPU_SENSE_I_R	CPU_SENSE_I_R - @m38a_lib.M38A	76D7
CPU_SMI_L	CPU_SMI_L - @m38a_lib.M38A	5C8 7C7 21C4
CPU_STPCLK_L	CPU_STPCLK_L - @m38a_lib.M38A	5C8 7C7 21C4
CPU_TEST1	CPU_TEST1 - @m38a_lib.M38A	7B4
CPU_TEST2	CPU_TEST2 - @m38a_lib.M38A	7B4
CPU_THERMD_EXT_N	CPU_THERMD_EXT_N - @m38a_lib.M38A	10B6
CPU_THERMD_EXT_P	CPU_THERMD_EXT_P - @m38a_lib.M38A	10B6
CPU_THERMD_N	CPU_THERMD_N - @m38a_lib.M38A	7C6 10C6
CPU_THERMD_P	CPU_THERMD_P - @m38a_lib.M38A	7C6 10C6
CPU_THERMTRIP_R	CPU_THERMTRIP_R - @m38a_lib.M38A	21C2
CPU_VCCSENSE_N	CPU_VCCSENSE_N - @m38a_lib.M38A	8B6 75A4
CPU_VCCSENSE_P	CPU_VCCSENSE_P - @m38a_lib.M38A	8B6 75A4
CPU_VID<0>	CPU_VID<0> - @m38a_lib.M38A	8B7 75C7
CPU_VID<1>	CPU_VID<1> - @m38a_lib.M38A	8B7 75C7
CPU_VID<2>	CPU_VID<2> - @m38a_lib.M38A	8B7 75C7
CPU_VID<3>	CPU_VID<3> - @m38a_lib.M38A	8B7 75C7
CPU_VID<4>	CPU_VID<4> - @m38a_lib.M38A	8B7 75C7
CPU_VID<5>	CPU_VID<5> - @m38a_lib.M38A	8B7 75C7
CPU_VID<6>	CPU_VID<6> - @m38a_lib.M38A	8B7 75D7
CPU_XDP_CLK_N	CPU_XDP_CLK_N - @m38a_lib.M38A	11B3 34B3
	FSB_CLK_XDP_N - @m38a_lib.M38A	34B4 34C2
CPU_XDP_CLK_P	CPU_XDP_CLK_P - @m38a_lib.M38A	11B3 34B3
	FSB_CLK_XDP_P - @m38a_lib.M38A	34B4 34C2
CRB_SV_DET	CRB_SV_DET - @m38a_lib.M38A	23B6 23C3
CRT_BLUE	CRT_BLUE - @m38a_lib.M38A	13B5 19D4
	=PPVCORE_S0_NB - @m38a_lib.M38A	6D4 16C8 16D3 19B6 19D5 19D7
	CRT_BLUE_L - @m38a_lib.M38A	13B5 19D4
	CRT_IREF - @m38a_lib.M38A	13B5 19D4
	CRT_GREEN_L - @m38a_lib.M38A	13B5 19D4
	CRT_GREEN - @m38a_lib.M38A	13B5 19D4
	PP2V5_S0_NB_VCCA_CRTDAC - @m38a_lib.M38A	17D6 19D4
	CRT_RED - @m38a_lib.M38A	13B5 19D4
	CRT_RED_L - @m38a_lib.M38A	13B5 19D4
	PP1V05_S0 - @m38a_lib.M38A	6D6 34A8 34B8 34C7 81C2
	=PP1V05_S0_CPU - @m38a_lib.M38A	5D4 6D4 7B5 7B7 7D5 7D5 8C7 9C8 9C8 11B3 11C5
	=PPVCORE_S0_SB - @m38a_lib.M38A	6D4 24D3 25D3
	=PP1V05_S0_SB_CPU_IO - @m38a_lib.M38A	6D4 21C1 21C1 24C3 25C3
	=PP1V05_S0_NB_VTT - @m38a_lib.M38A	6D4 17D3 19B8 19D7
	=PP1V05_S0_FSB_NB - @m38a_lib.M38A	5D4 6D4 12A7 12B7 12C2 19D7
	PP2V5_S0_NB_VCCA_CRTDAC - @m38a_lib.M38A	17D6 19D4
	PP1V05_S0 - @m38a_lib.M38A	6D6 34A8 34B8 34C7 81C2
	CRT_RED_L - @m38a_lib.M38A	13B5 19D4
	CRT_RED - @m38a_lib.M38A	13B5 19D4
	CRT_IREF - @m38a_lib.M38A	13B5 19D4
	CRT_GREEN_L - @m38a_lib.M38A	13B5 19D4
	CRT_GREEN - @m38a_lib.M38A	13B5 19D4
	CRT_BLUE_L - @m38a_lib.M38A	13B5 19D4
	=PPVCORE_S0_SB - @m38a_lib.M38A	6D4 24D3 25D3
	=PPVCORE_S0_NB - @m38a_lib.M38A	6D4 16C8 16D3 19B6 19D5 19D7
	=PP1V05_S0_SB_CPU_IO - @m38a_lib.M38A	6D4 21C1 21C1 24C3 25C3
	=PP1V05_S0_NB_VTT - @m38a_lib.M38A	6D4 17D3 19B8 19D7
	=PP1V05_S0_NB - @m38a_lib.M38A	6D4 19D7
	=PP1V05_S0_FSB_NB - @m38a_lib.M38A	5D4 6D4 12A7 12B7 12C2 19D7
	=PP1V05_S0_CPU - @m38a_lib.M38A	5D4 6D4 7B5 7B7 7D5 7D5 8C7 9C8 9C8 11B3 11C5
CRT_DDC_CLK	CRT_DDC_CLK - @m38a_lib.M38A	13B5 19C4
	TP_CRT_DDC_CLK - @m38a_lib.M38A	19C5
CRT_DDC_DATA	CRT_DDC_DATA - @m38a_lib.M38A	13B5 19C4
	TP_CRT_DDC_DATA - @m38a_lib.M38A	19C5
DEBUG_RST_L	DEBUG_RST_L - @m38a_lib.M38A	6B7 60C4
DMI_IRCOMP_R	DMI_IRCOMP_R - @m38a_lib.M38A	22C2
DMI_N2S_N<0>	DMI_N2S_N<0> - @m38a_lib.M38A	5B8 14B4 22D2
DMI_N2S_N<1>	DMI_N2S_N<1> - @m38a_lib.M38A	14B4 22D2
DMI_N2S_N<2>	DMI_N2S_N<2> - @m38a_lib.M38A	14B4 22D2

DMI_N2S_N<3>	DMI_N2S_N<3> - @m38a_lib.M38A	14B4 22D2
DMI_N2S_P<0>	DMI_N2S_P<0> - @m38a_lib.M38A	5B8 14B4 22D2
DMI_N2S_P<1>	DMI_N2S_P<1> - @m38a_lib.M38A	14B4 22D2
DMI_N2S_P<2>	DMI_N2S_P<2> - @m38a_lib.M38A	14B4 22D2
DMI_N2S_P<3>	DMI_N2S_P<3> - @m38a_lib.M38A	14B4 22D2
DMI_S2N_N<0>	DMI_S2N_N<0> - @m38a_lib.M38A	5C7 14B4 22D2
DMI_S2N_N<1>	DMI_S2N_N<1> - @m38a_lib.M38A	14B4 22D2
DMI_S2N_N<2>	DMI_S2N_N<2> - @m38a_lib.M38A	14B4 22D2
DMI_S2N_N<3>	DMI_S2N_N<3> - @m38a_lib.M38A	14B4 22D2
DMI_S2N_P<0>	DMI_S2N_P<0> - @m38a_lib.M38A	5C7 14B4 22D2
DMI_S2N_P<1>	DMI_S2N_P<1> - @m38a_lib.M38A	14B4 22D2
DMI_S2N_P<2>	DMI_S2N_P<2> - @m38a_lib.M38A	14B4 22D2
DMI_S2N_P<3>	DMI_S2N_P<3> - @m38a_lib.M38A	14B4 22D2
DVI_DDC_CLK	DVI_DDC_CLK - @m38a_lib.M38A	97D2
DVI_DDC_CLK_UF	DVI_DDC_CLK_UF - @m38a_lib.M38A	97D3 97D5
DVI_DDC_DATA	DVI_DDC_DATA - @m38a_lib.M38A	97C2
DVI_DDC_DATA_UF	DVI_DDC_DATA_UF - @m38a_lib.M38A	97C3 97D5
DVI_HPD_UF	DVI_HPD_UF - @m38a_lib.M38A	97C3 97D5
ENET_C4106_2	ENET_C4106_2 - @m38a_lib.M38A	41D2
ENET_C4107_2	ENET_C4107_2 - @m38a_lib.M38A	41D2
ENET_C4117_1	ENET_C4117_1 - @m38a_lib.M38A	41B2
ENET_C4118_1	ENET_C4118_1 - @m38a_lib.M38A	41B2
ENET_CLK100M_PCIE_N	ENET_CLK100M_PCIE_N - @m38a_lib.M38A	5D5 34A4 34B2 41C5
ENET_CLK100M_PCIE_P	ENET_CLK100M_PCIE_P - @m38a_lib.M38A	5D5 34A4 34B2 41C5
ENET_CTRL12	ENET_CTRL12 - @m38a_lib.M38A	41C7 42B8
	TP_ENET_CTRL12 - @m38a_lib.M38A	42B7
ENET_CTRL25	ENET_CTRL25 - @m38a_lib.M38A	41C7 42C6
ENET_GATED_RST_L	ENET_GATED_RST_L - @m38a_lib.M38A	41C5 42D2
	ENET_RST_L - @m38a_lib.M38A	6B7 42D3
ENET_LED_ACT_L	ENET_LED_ACT_L - @m38a_lib.M38A	41C8
ENET_LED_LINK10_100_L	ENET_LED_LINK10_100_L - @m38a_lib.M38A	41C8
ENET_LED_LINK1000_L	ENET_LED_LINK1000_L - @m38a_lib.M38A	41C8
ENET_LED_LINK_L	ENET_LED_LINK_L - @m38a_lib.M38A	41C8
ENET_LOM_DIS_L	ENET_LOM_DIS_L - @m38a_lib.M38A	41C7
ENET_MDI_N<0>	ENET_MDI_N<0> - @m38a_lib.M38A	41C2 43C7
ENET_MDI_N<1>	ENET_MDI_N<1> - @m38a_lib.M38A	41C2 43C7
ENET_MDI_N<2>	ENET_MDI_N<2> - @m38a_lib.M38A	41C2 43C7
ENET_MDI_N<3>	ENET_MDI_N<3> - @m38a_lib.M38A	41C2 43B7
ENET_MDI_P<0>	ENET_MDI_P<0> - @m38a_lib.M38A	41C2 43C7
ENET_MDI_P<1>	ENET_MDI_P<1> - @m38a_lib.M38A	41C2 43C7
ENET_MDI_P<2>	ENET_MDI_P<2> - @m38a_lib.M38A	41C2 43C7
ENET_MDI_P<3>	ENET_MDI_P<3> - @m38a_lib.M38A	41C2 43C7
ENET_MDI_R_N<0>	ENET_MDI_R_N<0> - @m38a_lib.M38A	5B4 43C6
ENET_MDI_R_N<1>	ENET_MDI_R_N<1> - @m38a_lib.M38A	5B4 43C6
ENET_MDI_R_N<2>	ENET_MDI_R_N<2> - @m38a_lib.M38A	5B4 43C6
ENET_MDI_R_N<3>	ENET_MDI_R_N<3> - @m38a_lib.M38A	5B4 43B6
ENET_MDI_R_P<0>	ENET_MDI_R_P<0> - @m38a_lib.M38A	5B4 43C6
ENET_MDI_R_P<1>	ENET_MDI_R_P<1> - @m38a_lib.M38A	5B4 43C6
ENET_MDI_R_P<2>	ENET_MDI_R_P<2> - @m38a_lib.M38A	5B4 43C6
ENET_MDI_R_P<3>	ENET_MDI_R_P<3> - @m38a_lib.M38A	5B4 43C6
ENET_PU_VDDO_TTL0	ENET_PU_VDDO_TTL0 - @m38a_lib.M38A	41C5
ENET_PU_VDDO_TTL1	ENET_PU_VDDO_TTL1 - @m38a_lib.M38A	41C5
ENET_RSET	ENET_RSET - @m38a_lib.M38A	41C7
ENET_VPD_CLK	ENET_VPD_CLK - @m38a_lib.M38A	41A2 41C4
ENET_VPD_DATA	ENET_VPD_DATA - @m38a_lib.M38A	41A2 41C4
ENET_XTALI	ENET_XTALI - @m38a_lib.M38A	41B5
ENET_XTALO	ENET_XTALO - @m38a_lib.M38A	41B5
F0_GATESLOWDN	F0_GATESLOWDN - @m38a_lib.M38A	65D5
F0_RCFEEDBK	F0_RCFEEDBK - @m38a_lib.M38A	65C5
F0_VOLTAGE8R5	F0_VOLTAGE8R5 - @m38a_lib.M38A	65D6
F1_GATESLOWDN	F1_GATESLOWDN - @m38a_lib.M38A	65B5
F1_RCFEEDBK	F1_RCFEEDBK - @m38a_lib.M38A	65B5
F1_VOLTAGE8R5	F1_VOLTAGE8R5 - @m38a_lib.M38A	65B6
F2_GATESLOWDN	F2_GATESLOWDN - @m38a_lib.M38A	66D4
F2_RCFEEDBK	F2_RCFEEDBK - @m38a_lib.M38A	66C5
F2_VOLTAGE8R5	F2_VOLTAGE8R5 - @m38a_lib.M38A	66D5
FAN_0_OUT	FAN_0_OUT - @m38a_lib.M38A	65C4
FAN_0_PWR	FAN_0_PWR - @m38a_lib.M38A	65C4
FAN_1_OUT	FAN_1_OUT - @m38a_lib.M38A	65B4
FAN_1_PWR	FAN_1_PWR - @m38a_lib.M38A	65B3
FAN_2_OUT	FAN_2_OUT - @m38a_lib.M38A	66C4
FAN_2_PWR	FAN_2_PWR - @m38a_lib.M38A	66C3
FAN_TACH0	FAN_TACH0 - @m38a_lib.M38A	65C7
FAN_TACH1	FAN_TACH1 - @m38a_lib.M38A	65A7
FAN_TACH2	FAN_TACH2 - @m38a_lib.M38A	66C7
FB_A0_MF	FB_A0_MF - @m38a_lib.M38A	89A7
FB_A0_SEN	FB_A0_SEN - @m38a_lib.M38A	89A7
FB_A0_VREF0	FB_A0_VREF0 - @m38a_lib.M38A	89C7
FB_A0_VREF1	FB_A0_VREF1 - @m38a_lib.M38A	89C7
FB_A0_ZQ	FB_A0_ZQ - @m38a_lib.M38A	89A7
FB_A1_MF	FB_A1_MF - @m38a_lib.M38A	89A4
FB_A1_SEN	FB_A1_SEN - @m38a_lib.M38A	89A4
FB_A1_VREF0	FB_A1_VREF0 - @m38a_lib.M38A	89C4
FB_A1_VREF1	FB_A1_VREF1 - @m38a_lib.M38A	89C4
FB_A1_ZQ	FB_A1_ZQ - @m38a_lib.M38A	89A4
FB_A_BA<0>	FB_A_BA<0> - @m38a_lib.M38A	87D5 89A5 89A8
FB_A_BA<1>	FB_A_BA<1> - @m38a_lib.M38A	87D5 89A5 89A8
FB_A_BA<2>	FB_A_BA<2> - @m38a_lib.M38A	87D5 89A5 89A8
FB_A_CAS_L<0>	FB_A_CAS_L<0> - @m38a_lib.M38A	5B6 87B5 89A8
FB_A_CAS_L<1>	FB_A_CAS_L<1> - @m38a_lib.M38A	5A6 87B5 89A5
FB_A_CKE<0>	FB_A_CKE<0> - @m38a_lib.M38A	5B6 87B5 89B8
FB_A_CKE<1>	FB_A_CKE<1> - @m38a_lib.M38A	5A6 87B5 89B5
FB_A_CLK_N<0>	FB_A_CLK_N<0> - @m38a_lib.M38A	5B6 87B5 89B8
FB_A_CLK_N<1>	FB_A_CLK_N<1> - @m38a_lib.M38A	5A6 87B5 89B5
FB_A_CLK_P<0>	FB_A_CLK_P<0> - @m38a_lib.M38A	5B6 87B5 89B8
FB_A_CLK_P<1>	FB_A_CLK_P<1> - @m38a_lib.M38A	5A6 87B5 89B5
FB_A_CS_L<0>	FB_A_CS_L<0> - @m38a_lib.M38A	5B6 87B5 89B8
FB_A_CS_L<1>	FB_A_CS_L<1> - @m38a_lib.M38A	5A6 87B5 89B5
FB_A_DQ<0>	FB_A_DQ<0> - @m38a_lib.M38A	5B6 5D6 87D7 89B6
FB_A_DQ<1>	FB_A_DQ<1> - @m38a_lib.M38A	87D7 89B6
FB_A_DQ<2>	FB_A_DQ<2> - @m38a_lib.M38A	87D7 89B6
FB_A_DQ<3>	FB_A_DQ<3> - @m38a_lib.M38A	87D7 89B6
FB_A_DQ<4>	FB_A_DQ<4> - @m38a_lib.M38A	87D7 89B6
FB_A_DQ<5>	FB_A_DQ<5> - @m38a_lib.M38A	87D7 89B6
FB_A_DQ<6>	FB_A_DQ<6> - @m38a_lib.M38A	87D7 89B6
F

FB_B_DQ<18>	FB_B_DQ<18> - @m38a_lib.M38A	87C3 90A6
FB_B_DQ<19>	FB_B_DQ<19> - @m38a_lib.M38A	87C3 90A6
FB_B_DQ<20>	FB_B_DQ<20> - @m38a_lib.M38A	87C3 90A6
FB_B_DQ<21>	FB_B_DQ<21> - @m38a_lib.M38A	87C3 90A6
FB_B_DQ<22>	FB_B_DQ<22> - @m38a_lib.M38A	87C3 90A6
FB_B_DQ<23>	FB_B_DQ<23> - @m38a_lib.M38A	87C3 90A6
FB_B_DQ<24>	FB_B_DQ<24> - @m38a_lib.M38A	5A5 5C6 87C3 90A6
FB_B_DQ<25>	FB_B_DQ<25> - @m38a_lib.M38A	87C3 90A6
FB_B_DQ<26>	FB_B_DQ<26> - @m38a_lib.M38A	87C3 90A6
FB_B_DQ<27>	FB_B_DQ<27> - @m38a_lib.M38A	87C3 90B6
FB_B_DQ<28>	FB_B_DQ<28> - @m38a_lib.M38A	87C3 90B6
FB_B_DQ<29>	FB_B_DQ<29> - @m38a_lib.M38A	87C3 90B6
FB_B_DQ<30>	FB_B_DQ<30> - @m38a_lib.M38A	87C3 90B6
FB_B_DQ<31>	FB_B_DQ<31> - @m38a_lib.M38A	87C3 90A6
FB_B_DQ<32>	FB_B_DQ<32> - @m38a_lib.M38A	5A5 5C6 87C3 90B2
FB_B_DQ<33>	FB_B_DQ<33> - @m38a_lib.M38A	87C3 90B3
FB_B_DQ<34>	FB_B_DQ<34> - @m38a_lib.M38A	87C3 90B3
FB_B_DQ<35>	FB_B_DQ<35> - @m38a_lib.M38A	87C3 90B3
FB_B_DQ<36>	FB_B_DQ<36> - @m38a_lib.M38A	87C3 90B3
FB_B_DQ<37>	FB_B_DQ<37> - @m38a_lib.M38A	87C3 90B3
FB_B_DQ<38>	FB_B_DQ<38> - @m38a_lib.M38A	87C3 90B3
FB_B_DQ<39>	FB_B_DQ<39> - @m38a_lib.M38A	87C3 90B3
FB_B_DQ<40>	FB_B_DQ<40> - @m38a_lib.M38A	5A5 5C6 87C3 90A2
FB_B_DQ<41>	FB_B_DQ<41> - @m38a_lib.M38A	87C3 90A3
FB_B_DQ<42>	FB_B_DQ<42> - @m38a_lib.M38A	87C3 90A3
FB_B_DQ<43>	FB_B_DQ<43> - @m38a_lib.M38A	87C3 90A3
FB_B_DQ<44>	FB_B_DQ<44> - @m38a_lib.M38A	87B3 90A3
FB_B_DQ<45>	FB_B_DQ<45> - @m38a_lib.M38A	87B3 90A3
FB_B_DQ<46>	FB_B_DQ<46> - @m38a_lib.M38A	87B3 90A3
FB_B_DQ<47>	FB_B_DQ<47> - @m38a_lib.M38A	87B3 90A3
FB_B_DQ<48>	FB_B_DQ<48> - @m38a_lib.M38A	5A5 5C6 87B3 90A2
FB_B_DQ<49>	FB_B_DQ<49> - @m38a_lib.M38A	87B3 90A3
FB_B_DQ<50>	FB_B_DQ<50> - @m38a_lib.M38A	87B3 90A3
FB_B_DQ<51>	FB_B_DQ<51> - @m38a_lib.M38A	87B3 90A3
FB_B_DQ<52>	FB_B_DQ<52> - @m38a_lib.M38A	87B3 90A3
FB_B_DQ<53>	FB_B_DQ<53> - @m38a_lib.M38A	87B3 90A3
FB_B_DQ<54>	FB_B_DQ<54> - @m38a_lib.M38A	87B3 90A3
FB_B_DQ<55>	FB_B_DQ<55> - @m38a_lib.M38A	87B3 90A3
FB_B_DQ<56>	FB_B_DQ<56> - @m38a_lib.M38A	5A5 5C6 87B3 90A2
FB_B_DQ<57>	FB_B_DQ<57> - @m38a_lib.M38A	87B3 90A3
FB_B_DQ<58>	FB_B_DQ<58> - @m38a_lib.M38A	87B3 90B3
FB_B_DQ<59>	FB_B_DQ<59> - @m38a_lib.M38A	87B3 90B3
FB_B_DQ<60>	FB_B_DQ<60> - @m38a_lib.M38A	87B3 90B3
FB_B_DQ<61>	FB_B_DQ<61> - @m38a_lib.M38A	87B3 90B3
FB_B_DQ<62>	FB_B_DQ<62> - @m38a_lib.M38A	87B3 90A3
FB_B_DQ<63>	FB_B_DQ<63> - @m38a_lib.M38A	87B3 90A3
FB_B_DQM_L<0>	FB_B_DQM_L<0> - @m38a_lib.M38A	87D1 90B6
FB_B_DQM_L<1>	FB_B_DQM_L<1> - @m38a_lib.M38A	87C1 90B6
FB_B_DQM_L<2>	FB_B_DQM_L<2> - @m38a_lib.M38A	87C1 90B6
FB_B_DQM_L<3>	FB_B_DQM_L<3> - @m38a_lib.M38A	87C1 90B6
FB_B_DQM_L<4>	FB_B_DQM_L<4> - @m38a_lib.M38A	87C1 90B3
FB_B_DQM_L<5>	FB_B_DQM_L<5> - @m38a_lib.M38A	87C1 90B3
FB_B_DQM_L<6>	FB_B_DQM_L<6> - @m38a_lib.M38A	87C1 90B3
FB_B_DQM_L<7>	FB_B_DQM_L<7> - @m38a_lib.M38A	87C1 90B3
FB_B_MA<0>	FB_B_MA<0> - @m38a_lib.M38A	87D1 90B5 90B8
FB_B_MA<1>	FB_B_MA<1> - @m38a_lib.M38A	87D1 90B5 90B8
FB_B_MA<2>	FB_B_MA<2> - @m38a_lib.M38A	87D1 90B5 90B8
FB_B_MA<3>	FB_B_MA<3> - @m38a_lib.M38A	5A5 5B5 5C6 87D1 90B5 90B8
FB_B_MA<4>	FB_B_MA<4> - @m38a_lib.M38A	87D1 90B5 90B8
FB_B_MA<5>	FB_B_MA<5> - @m38a_lib.M38A	87D1 90B5 90B8
FB_B_MA<6>	FB_B_MA<6> - @m38a_lib.M38A	87D1 90B5 90B8
FB_B_MA<7>	FB_B_MA<7> - @m38a_lib.M38A	87D1 90B5 90B8
FB_B_MA<8>	FB_B_MA<8> - @m38a_lib.M38A	87D1 90B5 90B8
FB_B_MA<9>	FB_B_MA<9> - @m38a_lib.M38A	87D1 90B5 90B8
FB_B_MA<10>	FB_B_MA<10> - @m38a_lib.M38A	87D1 90B5 90B8
FB_B_MA<11>	FB_B_MA<11> - @m38a_lib.M38A	87D1 90B5 90B8
FB_B_RAS_L<0>	FB_B_RAS_L<0> - @m38a_lib.M38A	5B5 87B1 90A5
FB_B_RAS_L<1>	FB_B_RAS_L<1> - @m38a_lib.M38A	5A5 87B1 90A5
FB_B_RDQS<0>	FB_B_RDQS<0> - @m38a_lib.M38A	5C6 87C1 90A8
FB_B_RDQS<1>	FB_B_RDQS<1> - @m38a_lib.M38A	5C6 87C1 90A8
FB_B_RDQS<2>	FB_B_RDQS<2> - @m38a_lib.M38A	5C6 87C1 90A8
FB_B_RDQS<3>	FB_B_RDQS<3> - @m38a_lib.M38A	5C6 87C1 90A8
FB_B_RDQS<4>	FB_B_RDQS<4> - @m38a_lib.M38A	5C6 87C1 90A5
FB_B_RDQS<5>	FB_B_RDQS<5> - @m38a_lib.M38A	5C6 87C1 90A5
FB_B_RDQS<6>	FB_B_RDQS<6> - @m38a_lib.M38A	5C6 87C1 90A5
FB_B_RDQS<7>	FB_B_RDQS<7> - @m38a_lib.M38A	5C6 87C1 90A5
FB_B_WDQS<0>	FB_B_WDQS<0> - @m38a_lib.M38A	5B5 87C1 90A8
FB_B_WDQS<1>	FB_B_WDQS<1> - @m38a_lib.M38A	5B5 87C1 90A8
FB_B_WDQS<2>	FB_B_WDQS<2> - @m38a_lib.M38A	5B5 87C1 90A8
FB_B_WDQS<3>	FB_B_WDQS<3> - @m38a_lib.M38A	5B5 87C1 90A8
FB_B_WDQS<4>	FB_B_WDQS<4> - @m38a_lib.M38A	5A5 87C1 90A5
FB_B_WDQS<5>	FB_B_WDQS<5> - @m38a_lib.M38A	5A5 87C1 90A5
FB_B_WDQS<6>	FB_B_WDQS<6> - @m38a_lib.M38A	5A5 87C1 90A5
FB_B_WDQS<7>	FB_B_WDQS<7> - @m38a_lib.M38A	5A5 87C1 90A5
FB_B_WE_L<0>	FB_B_WE_L<0> - @m38a_lib.M38A	5B5 87B1 90A8
FB_B_WE_L<1>	FB_B_WE_L<1> - @m38a_lib.M38A	5A5 87B1 90A5
FB_DRAM_RST	FB_DRAM_RST - @m38a_lib.M38A	87A1 88A8
	DRAM_RST - @m38a_lib.M38A	5A5 5A6 5B5 5B6 88A6 89A5 89A8 90A5 90A8
FSB_ADSTB_L<0>	FSB_ADSTB_L<0> - @m38a_lib.M38A	5D7 5D8 7D7 12C4
FSB_ADSTB_L<1>	FSB_ADSTB_L<1> - @m38a_lib.M38A	5D7 5D8 7C7 12C4
FSB_ADS_L	FSB_ADS_L - @m38a_lib.M38A	7D6 12C4
FSB_A_L<3>	FSB_A_L<3> - @m38a_lib.M38A	7D7 12D4
FSB_A_L<4>	FSB_A_L<4> - @m38a_lib.M38A	7D7 12D4
FSB_A_L<5>	FSB_A_L<5> - @m38a_lib.M38A	7D7 12D4
FSB_A_L<6>	FSB_A_L<6> - @m38a_lib.M38A	5D7 5D8 7D7 12D4
FSB_A_L<7>	FSB_A_L<7> - @m38a_lib.M38A	7D7 12D4
FSB_A_L<8>	FSB_A_L<8> - @m38a_lib.M38A	7D7 12D4
FSB_A_L<9>	FSB_A_L<9> - @m38a_lib.M38A	7D7 12D4
FSB_A_L<10>	FSB_A_L<10> - @m38a_lib.M38A	7D7 12D4
FSB_A_L<11>	FSB_A_L<11> - @m38a_lib.M38A	7D7 12D4
FSB_A_L<12>	FSB_A_L<12> - @m38a_lib.M38A	7D7 12D4
FSB_A_L<13>	FSB_A_L<13> - @m38a_lib.M38A	7D7 12D4
FSB_A_L<14>	FSB_A_L<14> - @m38a_lib.M38A	7D7 12D4
FSB_A_L<15>	FSB_A_L<15> - @m38a_lib.M38A	7D7 12D4
FSB_A_L<16>	FSB_A_L<16> - @m38a_lib.M38A	7D7 12C4
FSB_A_L<17>	FSB_A_L<17> - @m38a_lib.M38A	7C7 12C4
FSB_A_L<18>	FSB_A_L<18> - @m38a_lib.M38A	7C7 12C4
FSB_A_L<19>	FSB_A_L<19> - @m38a_lib.M38A	7C7 12C4
FSB_A_L<20>	FSB_A_L<20> - @m38a_lib.M38A	7C7 12C4
FSB_A_L<21>	FSB_A_L<21> - @m38a_lib.M38A	7C7 12C4
FSB_A_L<22>	FSB_A_L<22> - @m38a_lib.M38A	7C7 12C4
FSB_A_L<23>	FSB_A_L<23> - @m38a_lib.M38A	7C7 12C4
FSB_A_L<24>	FSB_A_L<24> - @m38a_lib.M38A	7C7 12C4
FSB_A_L<25>	FSB_A_L<25> - @m38a_lib.M38A	7C7 12C4
FSB_A_L<26>	FSB_A_L<26> - @m38a_lib.M38A	7C7 12C4
FSB_A_L<27>	FSB_A_L<27> - @m38a_lib.M38A	5D7 5D8 7C7 12C4
FSB_A_L<28>	FSB_A_L<28> - @m38a_lib.M38A	7C7 12C4
FSB_A_L<29>	FSB_A_L<29> - @m38a_lib.M38A	7C7 12C4
FSB_A_L<30>	FSB_A_L<30> - @m38a_lib.M38A	7C7 12C4
FSB_A_L<31>	FSB_A_L<31> - @m38a_lib.M38A	7C7 12C4
FSB_BNR_L	FSB_BNR_L - @m38a_lib.M38A	5C7 7D6 12C4
FSB_BPRI_L	FSB_BPRI_L - @m38a_lib.M38A	7D6 12C4

FSB_BREQ0_L	FSB_BREQ0_L - @m38a_lib.M38A	5C7 7D6 12C4
FSB_CLK_CPU_N	FSB_CLK_CPU_N - @m38a_lib.M38A	5C8 7C6 34B4 34C2
FSB_CLK_CPU_P	FSB_CLK_CPU_P - @m38a_lib.M38A	5C8 7C6 34B4 34C2
FSB_CLK_NB_N	FSB_CLK_NB_N - @m38a_lib.M38A	5C7 12A6 34B4 34C2
FSB_CLK_NB_P	FSB_CLK_NB_P - @m38a_lib.M38A	5C7 12A6 34B4 34C2
FSB_CPURST_L	FSB_CPURST_L - @m38a_lib.M38A	5C8 7D6 11B5 12C4
FSB_DBSY_L	FSB_DBSY_L - @m38a_lib.M38A	5C7 7D6 12B4
FSB_DEFER_L	FSB_DEFER_L - @m38a_lib.M38A	7D6 12B4
FSB_DINV_L<0>	FSB_DINV_L<0> - @m38a_lib.M38A	5D7 5D8 7C4 12B4
FSB_DINV_L<1>	FSB_DINV_L<1> - @m38a_lib.M38A	5D7 5D8 7B4 12B4
FSB_DINV_L<2>	FSB_DINV_L<2> - @m38a_lib.M38A	5D7 5D8 7C2 12B4
FSB_DINV_L<3>	FSB_DINV_L<3> - @m38a_lib.M38A	5D7 5D8 7B2 12B4
FSB_DPWR_L	FSB_DPWR_L - @m38a_lib.M38A	5C7 7B3 12B4
FSB_DRDY_L	FSB_DRDY_L - @m38a_lib.M38A	7D6 12B4
FSB_DSTBN_L<0>	FSB_DSTBN_L<0> - @m38a_lib.M38A	5D7 5D8 7C4 12B4
FSB_DSTBN_L<1>	FSB_DSTBN_L<1> - @m38a_lib.M38A	5D7 5D8 7B4 12B4
FSB_DSTBN_L<2>	FSB_DSTBN_L<2> - @m38a_lib.M38A	5D7 5D8 7C2 12B4
FSB_DSTBN_L<3>	FSB_DSTBN_L<3> - @m38a_lib.M38A	5D7 5D8 7B2 12B4
FSB_DSTBP_L<0>	FSB_DSTBP_L<0> - @m38a_lib.M38A	5D7 5D8 7C4 12B4
FSB_DSTBP_L<1>	FSB_DSTBP_L<1> - @m38a_lib.M38A	5D7 5D8 7B4 12B4
FSB_DSTBP_L<2>	FSB_DSTBP_L<2> - @m38a_lib.M38A	5D7 5D8 7C2 12B4
FSB_DSTBP_L<3>	FSB_DSTBP_L<3> - @m38a_lib.M38A	5D7 5D8 7B2 12B4
FSB_D_L<0>	FSB_D_L<0> - @m38a_lib.M38A	5D7 5D8 7C4 12D6
FSB_D_L<1>	FSB_D_L<1> - @m38a_lib.M38A	7C4 12D6
FSB_D_L<2>	FSB_D_L<2> - @m38a_lib.M38A	7C4 12D6
FSB_D_L<3>	FSB_D_L<3> - @m38a_lib.M38A	7C4 12D6
FSB_D_L<4>	FSB_D_L<4> - @m38a_lib.M38A	7C4 12D6
FSB_D_L<5>	FSB_D_L<5> - @m38a_lib.M38A	7C4 12D6
FSB_D_L<6>	FSB_D_L<6> - @m38a_lib.M38A	7C4 12D6
FSB_D_L<7>	FSB_D_L<7> - @m38a_lib.M38A	7C4 12D6
FSB_D_L<8>	FSB_D_L<8> - @m38a_lib.M38A	7C4 12D6
FSB_D_L<9>	FSB_D_L<9> - @m38a_lib.M38A	7C4 12D6
FSB_D_L<10>	FSB_D_L<10> - @m38a_lib.M38A	7C4 12D6
FSB_D_L<11>	FSB_D_L<11> - @m38a_lib.M38A	7C4 12D6
FSB_D_L<12>	FSB_D_L<12> - @m38a_lib.M38A	7C4 12D6
FSB_D_L<13>	FSB_D_L<13> - @m38a_lib.M38A	7C4 12C6
FSB_D_L<14>	FSB_D_L<14> - @m38a_lib.M38A	7C4 12C6
FSB_D_L<15>	FSB_D_L<15> - @m38a_lib.M38A	7C4 12C6
FSB_D_L<16>	FSB_D_L<16> - @m38a_lib.M38A	5D7 5D8 7C4 12C6
FSB_D_L<17>	FSB_D_L<17> - @m38a_lib.M38A	7C4 12C6
FSB_D_L<18>	FSB_D_L<18> - @m38a_lib.M38A	7B4 12C6
FSB_D_L<19>	FSB_D_L<19> - @m38a_lib.M38A	7B4 12C6
FSB_D_L<20>	FSB_D_L<20> - @m38a_lib.M38A	7B4 12C6
FSB_D_L<21>	FSB_D_L<21> - @m38a_lib.M38A	7B4 12C6
FSB_D_L<22>	FSB_D_L<22> - @m38a_lib.M38A	7B4 12C6
FSB_D_L<23>	FSB_D_L<23> - @m38a_lib.M38A	7B4 12C6
FSB_D_L<24>	FSB_D_L<24> - @m38a_lib.M38A	7B4 12C6
FSB_D_L<25>	FSB_D_L<25> - @m38a_lib.M38A	7B4 12C6
FSB_D_L<26>	FSB_D_L<26> - @m38a_lib.M38A	7B4 12C6
FSB_D_L<27>	FSB_D_L<27> - @m38a_lib.M38A	7B4 12C6
FSB_D_L<28>	FSB_D_L<28> - @m38a_lib.M38A	7B4 12C6
FSB_D_L<29>	FSB_D_L<29> - @m38a_lib.M38A	7B4 12C6
FSB_D_L<30>	FSB_D_L<30> - @m38a_lib.M38A	7B4 12C6
FSB_D_L<31>	FSB_D_L<31> - @m38a_lib.M38A	7B4 12C6
FSB_D_L<32>	FSB_D_L<32> - @m38a_lib.M38A	7C2 12C6
FSB_D_L<33>	FSB_D_L<33> - @m38a_lib.M38A	7C2 12C6
FSB_D_L<34>	FSB_D_L<34> - @m38a_lib.M38A	7C2 12C6
FSB_D_L<35>	FSB_D_L<35> - @m38a_lib.M38A	7C2 12C6
FSB_D_L<36>	FSB_D_L<36> - @m38a_lib.M38A	7C2 12C6
FSB_D_L<37>	FSB_D_L<37> - @m38a_lib.M38A	7C2 12C6
FSB_D_L<38>	FSB_D_L<38> - @m38a_lib.M38A	7C2 12C6
FSB_D_L<39>	FSB_D_L<39> - @m38a_lib.M38A	7C2 12B6
FSB_D_L<40>	FSB_D_L<40> - @m38a_lib.M38A	7C2 12B6
FSB_D_L<41>	FSB_D_L<41> - @m38a_lib.M38A	5D7 5D8 7C2 12B6
FSB_D_L<42>	FSB_D_L<42> - @m38a_lib.M38A	7C2 12B6
FSB_D_L<43>	FSB_D_L<43> - @m38a_lib.M38A	7C2 12B6
FSB_D_L<44>	FSB_D_L<44> - @m38a_lib.M38A	7C2 12B6
FSB_D_L<45>	FSB_D_L<45> - @m38a_lib.M38A	7C2 12B6
FSB_D_L<46>	FSB_D_L<46> - @m38a_lib.M38A	7C2 12B6
FSB_D_L<47>	FSB_D_L<47> - @m38a_lib.M38A	7C2 12B6
FSB_D_L<48>	FSB_D_L<48> - @m38a_lib.M38A	7C2 12B6
FSB_D_L<49>	FSB_D_L<49> - @m38a_lib.M38A	7C2 12B6
FSB_D_L<50>	FSB_D_L<50> - @m38a_lib.M38A	7B2 12B6
FSB_D_L<51>	FSB_D_L<51> - @m38a_lib.M38A	7B2 12B6
FSB_D_L<52>	FSB_D_L<52> - @m38a_lib.M38A	7B2 12B6
FSB_D_L<53>	FSB_D_L<53> - @m38a_lib.M38A	7B2 12B6
FSB_D_L<54>	FSB_D_L<54> - @m38a_lib.M38A	7B2 12B6
FSB_D_L<55>	FSB_D_L<55> - @m38a_lib.M38A	7B2 12B6
FSB_D_L<56>	FSB_D_L<56> - @m38a_lib.M38A	7B2 12B6
FSB_D_L<57>	FSB_D_L<57> - @m38a_lib.M38A	7B2 12B6
FSB_D_L<58>	FSB_D_L<58> - @m38a_lib.M38A	7B2 12B6
FSB_D_L<59>	FSB_D_L<59> - @m38a_lib.M38A	5D7 5D8 7B2 12B6
FSB_D_L<60>	FSB_D_L<60> - @m38a_lib.M38A	7B2 12B6
FSB_D_L<61>	FSB_D_L<61> - @m38a_lib.M38A	7B2 12B6
FSB_D_L<62>	FSB_D_L<62> - @m38a_lib.M38A	7B2 12B6
FSB_D_L<63>	FSB_D_L<63> - @m38a_lib.M38A	7B2 12B6
FSB_HITM_L	FSB_HITM_L - @m38a_lib.M38A	5C7 7D6 12B4
FSB_HIT_L	FSB_HIT_L - @m38a_lib.M38A	5C7 7D6 12B4
FSB_IERR_L	FSB_IERR_L - @m38a_lib.M38A	7D6
FSB_LOCK_L	FSB_LOCK_L - @m38a_lib.M38A	5D7 5D8 7D6 12B4
FSB_REQ_L<0>	FSB_REQ_L<0> - @m38a_lib.M38A	5C7 7D7 12B4
FSB_REQ_L<1>	FSB_REQ_L<1> - @m38a_lib.M38A	5C7 7D7 12B4
FSB_REQ_L<2>	FSB_REQ_L<2> - @m38a_lib.M38A	5C7 7D7 12A4
FSB_REQ_L<3>	FSB_REQ_L<3> - @m38a_lib.M38A	5C7 7D7 12A4
FSB_REQ_L<4>	FSB_REQ_L<4> - @m38a_lib.M38A	5C7 7D7 12A4
FSB_RS_L<0>	FSB_RS_L<0> - @m38a_lib.M38A	7D6 12A4
FSB_RS_L<1>	FSB_RS_L<1> - @m38a_lib.M38A	7D6 12A4
FSB_RS_L<2>	FSB_RS_L<2> - @m38a_lib.M38A	7D6 12A4
FSB_SLPCPU_L	FSB_SLPCPU_L - @m38a_lib.M38A	7A3 12A4
FSB_TRDY_L	FSB_TRDY_L - @m38a_lib.M38A	7D6 12A4
FWH_INIT_L	FWH_INIT_L - @m38a_lib.M38A	21C1 59C5 60C1
	SMC_CPU_INIT_3_3_L - @m38a_lib.M38A	58D5 59C6
FWH_MFG_MODE	FWH_MFG_MODE - @m38a_lib.M38A	23A6 23C5
FW_A_TPA_N	FW_A_TPA_N - @m38a_lib.M38A	44C3 46C8
	FW_PORT0_TPA_N - @m38a_lib.M38A	46C5 46C6
FW_A_TPA_P	FW_A_TPA_P - @m38a_lib.M38A	44C3 46C8
	FW_PORT0_TPA_P - @m38a_lib.M38A	46C5 46C6
FW_A_TPBIAS	FW_A_TPBIAS - @m38a_lib.M38A	44C4 46C8
FW_A_TPB_N	FW_A_TPB_N - @m38a_lib.M38A	44C3 46C8
	FW_PORT0_TPB_N - @m38a_lib.M38A	46C5 46C6
FW_A_TPB_P	FW_A_TPB_P - @m38a_lib.M38A	44C3 46C8
	FW_PORT0_TPB_P - @m38a_lib.M38A	46C5 46C6
FW_B_TPA_N	FW_B_TPA_N - @m38a_lib.M38A	44C3 46C8
	FW_PORT1_TPA_N - @m38a_lib.M38A	46B5 46C6
FW_B_TPA_P	FW_B_TPA_P - @m38a_lib.M38A	44C3 46C8
	FW_PORT1_TPA_P - @m38a_lib.M38A	46B5 46C6
FW_B_TPBIAS	FW_B_TPBIAS - @m38a_lib.M38A	44C4 46C8
FW_B_TPB_N	FW_B_TPB_N - @m38a_lib.M38A	44C3 46C8
	FW_PORT1_TPB_N - @m38a_lib.M38A	46B5 46C6
FW_B_TPB_P	FW_B_TPB_P - @m38a_lib.M38A	44C3 46C8
	FW_PORT1_TPB_P - @m38a_lib.M38A	46B5 46C6
FW_CARDBUS_L	FW_CARDBUS_L - @m38a_lib.M38A	44B5
FW_CONTENDER	FW_CONTENDER - @m38a_lib.M38A	44B3
FW_CPS	FW_CPS - @m38a_lib.M38A	44C3

FW_C_TPA_N	FW_C_TPA_N - @m38a_lib.M38A	44C3 46B8
	TP_FW_C_TPA_N - @m38a_lib.M38A	46B7
FW_C_TPA_P	FW_C_TPA_P - @m38a_lib.M38A	44C3 46B8
	TP_FW_C_TPA_P - @m38a_lib.M38A	46B7
FW_C_TPBIAS	FW_C_TPBIAS - @m38a_lib.M38A	44C4 46B8
	TP_FW_C_TPBIAS - @m38a_lib.M38A	46B7
FW_C_TPB_N	FW_C_TPB_N - @m38a_lib.M38A	44C3 46A8
	TP_FW_C_TPB_N - @m38a_lib.M38A	46A7
FW_C_TPB_P	FW_C_TPB_P - @m38a_lib.M38A	44C3 46A8
	TP_FW_C_TPB_P - @m38a_lib.M38A	46A7
FW_PC0	FW_PC0 - @m38a_lib.M38A	44B3
FW_PC1	FW_PC1 - @m38a_lib.M38A	44B3
FW_PC2	FW_PC2 - @m38a_lib.M38A	44B3
FW_PORT0_TPA_FL_N	FW_PORT0_TPA_FL_N - @m38a_lib.M38A	46C2
FW_PORT0_TPA_FL_P	FW_PORT0_TPA_FL_P - @m38a_lib.M38A	46C2
FW_PORT0_TPB_FL_N	FW_PORT0_TPB_FL_N - @m38a_lib.M38A	46C2
FW_PORT0_TPB_FL_P	FW_PORT0_TPB_FL_P - @m38a_lib.M38A	46C2
FW_PORT1_TPA_FL_N	FW_PORT1_TPA_FL_N - @m38a_lib.M38A	46B2
FW_PORT1_TPA_FL_P	FW_PORT1_TPA_FL_P - @m38a_lib.M38A	46B2
FW_PORT1_TPB_FL_N	FW_PORT1_TPB_FL_N - @m38a_lib.M38A	46B2
FW_PORT1_TPB_FL_P	FW_PORT1_TPB_FL_P - @m38a_lib.M38A	46B2
FW_R0	FW_R0 - @m38a_lib.M38A	44C4
FW_R1	FW_R1 - @m38a_lib.M38A	44C4
FW_RESET_L	FW_RESET_L - @m38a_lib.M38A	44C2 44C3
FW_ROM_CLK	FW_ROM_CLK - @m38a_lib.M38A	44B4
FW_SE	FW_SE - @m38a_lib.M38A	44B3
FW_SM	FW_SM - @m38a_lib.M38A	44B3
FW_TEST	FW_TEST - @m38a_lib.M38A	44B3
FW_TPA_C<0>	FW_TPA_C<0> - @m38a_lib.M38A	46B8
FW_TPA_C<1>	FW_TPA_C<1> - @m38a_lib.M38A	46B7
FW_VP	FW_VP - @m38a_lib.M38A	46D4
FW_XTAL_X0	FW_XTAL_X0 - @m38a_lib.M38A	44D2 44D3
FW_XTAL_XI	FW_XTAL_XI - @m38a_lib.M38A	44D2 44D3
FW_XTAL_XR	FW_XTAL_XR - @m38a_lib.M38A	44D2
GATE_3V3_S3	GATE_3V3_S3 - @m38a_lib.M38A	83B4
GATE_5V_S3	GATE_5V_S3 - @m38a_lib.M38A	83C4
GND_AUDIO	GND_AUDIO - @m38a_lib.M38A	6C2 74D2
GND_AUDIO_CODEC	GND_AUDIO_CODEC - @m38a_lib.M38A	68A5 68B7 68D2 72B8 72C8 73A8 73D4 74A2 74A3 74A5 74A7 74B5 74B7 74C1 74C3 74C5 74C6 74D1 74D5
GND_AUDIO_CODEC_EMI1	GND_AUDIO_CODEC_EMI1 - @m38a_lib.M38A	73A7
GND_AUDIO_MIC_CONN	GND_AUDIO_MIC_CONN - @m38a_lib.M38A	47C2 73C2
GND_AUDIO_SPKRAMP	GND_AUDIO_SPKRAMP - @m38a_lib.M38A	6C2 72B1 74D3
GND_AUDIO_SPKRAMP_PL	GND_AUDIO_SPKRAMP_PLANE -	72A6 72B2 72B5 72D2 72D8
ANE	@m38a_lib.M38A	74C3
GND_BNDI	GND_BNDI - @m38a_lib.M38A	47B2 47D1
GND_CHASSIS_AUDIO_EX	GND_CHASSIS_AUDIO_EXTERNAL -	6B2 73C7
TERNAL	@m38a_lib.M38A	
	GND_CHASSIS_IO_LEFT -	6B2
	@m38a_lib.M38A	
	GND_CHASSIS_USB - @m38a_lib.M38A	6B2 47A4 47B4 47C4
	GND_CHASSIS_IO_LEFT -	6B2
	@m38a_lib.M38A	
GND_CHASSIS_AUDIO_EX	GND_CHASSIS_AUDIO_EXTERNAL_J -	73A8 73C5 73C8 74C1 74C3
TERNAL_J	@m38a_lib.M38A	
GND_CHASSIS_AUDIO_IN	GND_CHASSIS_AUDIO_INTERNAL -	6A2 73C4
TERNAL	@m38a_lib.M38A	
	GND_CHASSIS_BNDI - @m38a_lib.M38A	6A2 47C2 47C2 47D2
GND_CHASSIS_FIREWIRE	GND_CHASSIS_FIREWIRE -	6B2 46A1 46C1
	@m38a_lib.M38A	
	GND_CHASSIS_RJ45 - @m38a_lib.M38A	6B2 43C6
	GND_CHASSIS_VGA - @m38a_lib.M38A	6B2 97C4
	GND_CHASSIS_RJ45 - @m38a_lib.M38A	6B2 43C6
	GND_CHASSIS_IO_RIGHT -	6B1
	@m38a_lib.M38A	
GND_GPUVCORE_SGND	GND_GPUVCORE_SGND - @m38a_lib.M38A	85C7
GND_GPU_PCIE_PVSS	GND_GPU_PCIE_PVSS - @m38a_lib.M38A	84B8
GND_IMVP6_SGND	GND_IMVP6_SGND - @m38a_lib.M38A	75A4 75B6 75B8 75D7
GND_NB_VSSA_LVDS	GND_NB_VSSA_LVDS - @m38a_lib.M38A	17C6 19C2
	TP_GND_NB_VSSA_LVDS -	19C1
	@m38a_lib.M38A	
GND_NEXT_TO_SMC	GND_NEXT_TO_SMC - @m38a_lib.M38A	59B2
GND_SMC_AVSS	GND_SMC_AVSS - @m38a_lib.M38A	58B2 58C4 59A3 59B3 76B2 76B6 76C5 85C1
GPUISENS_NEG	GPUISENS_NEG - @m38a_lib.M38A	85D3
GPUISENS_NTC	GPUISENS_NTC - @m38a_lib.M38A	85D3
GPUISENS_POS	GPUISENS_POS - @m38a_lib.M38A	85D3
GPUISENS_RC	GPUISENS_RC - @m38a_lib.M38A	85D3
GPUVCORE_BOOT	GPUVCORE_BOOT - @m38a_lib.M38A	85C5
GPUVCORE_COMP	GPUVCORE_COMP - @m38a_lib.M38A	85C7
GPUVCORE_COMP_R	GPUVCORE_COMP_R - @m38a_lib.M38A	85C7
GPUVCORE_EN	GPUVCORE_EN - @m38a_lib.M38A	85C8 88A8
GPUVCORE_FB	GPUVCORE_FB - @m38a_lib.M38A	85C7
GPUVCORE_FCCM	GPUVCORE_FCCM - @m38a_lib.M38A	85C7
GPUVCORE_FSET	GPUVCORE_FSET - @m38a_lib.M38A	85C7
GPUVCORE_IOUT	GPUVCORE_IOUT - @m38a_lib.M38A	59C5 85D1
	SMC_GPU_ISENSE - @m38a_lib.M38A	58D5 59C6
GPUVCORE_ISEN	GPUVCORE_ISEN - @m38a_lib.M38A	85C5
GPUVCORE_LG	GPUVCORE_LG - @m38a_lib.M38A	85C5
GPUVCORE_PGOOD	GPUVCORE_PGOOD - @m38a_lib.M38A	77A4 85C8
GPUVCORE_PHASE	GPUVCORE_PHASE - @m38a_lib.M38A	85C5
GPUVCORE_UG	GPUVCORE_UG - @m38a_lib.M38A	85C5
GPU_B2	GPU_B2 - @m38a_lib.M38A	93B3 97B8
GPU_CLK27M	GP

IMVP6_UGATE1	IMVP6_UGATE1 - @m38a_lib.M38A	75A8 75C5
IMVP6_UGATE2	IMVP6_UGATE2 - @m38a_lib.M38A	75A6 75C5
IMVP6_VDIFF	IMVP6_VDIFF - @m38a_lib.M38A	75A4 75B6
IMVP6_VDIFF_RC	IMVP6_VDIFF_RC - @m38a_lib.M38A	75B7
IMVP6_VO	IMVP6_VO - @m38a_lib.M38A	75A4 75B4
IMVP6_VO_R	IMVP6_VO_R - @m38a_lib.M38A	75B4
IMVP6_VR_TT	IMVP6_VR_TT - @m38a_lib.M38A	75C7
IMVP6_VSEN	IMVP6_VSEN - @m38a_lib.M38A	75A4 75B5
IMVP6_VSUM	IMVP6_VSUM - @m38a_lib.M38A	75A4 75C5
IMVP6_VSUM_R1	IMVP6_VSUM_R1 - @m38a_lib.M38A	75A8 75C2
IMVP6_VSUM_R2	IMVP6_VSUM_R2 - @m38a_lib.M38A	75A6 75B2
IMVP6_VW	IMVP6_VW - @m38a_lib.M38A	75A4 75B6
IMVP_DPRSLPVR	IMVP_DPRSLPVR - @m38a_lib.M38A	75C6
IMVP_PGD_IN	IMVP_PGD_IN - @m38a_lib.M38A	75C6 77D5
IMVP_VID<0>	IMVP_VID<0> - @m38a_lib.M38A	75C6
IMVP_VID<1>	IMVP_VID<1> - @m38a_lib.M38A	75C7
IMVP_VID<2>	IMVP_VID<2> - @m38a_lib.M38A	75C7
IMVP_VID<3>	IMVP_VID<3> - @m38a_lib.M38A	75C7
IMVP_VID<4>	IMVP_VID<4> - @m38a_lib.M38A	75C7
IMVP_VID<5>	IMVP_VID<5> - @m38a_lib.M38A	75C7
IMVP_VID<6>	IMVP_VID<6> - @m38a_lib.M38A	75C7
IMVP_VR_ON	IMVP_VR_ON - @m38a_lib.M38A	58D7 75C6
INT_PIRQA_L	INT_PIRQA_L - @m38a_lib.M38A	22A7 26D2
INT_PIRQB_L	INT_PIRQB_L - @m38a_lib.M38A	22A7 26D2
INT_PIRQC_L	INT_PIRQC_L - @m38a_lib.M38A	22A7 26D2
INT_PIRQD_L	INT_PIRQD_L - @m38a_lib.M38A	22A7 26D2 44B5
INT_SERIRQ	INT_SERIRQ - @m38a_lib.M38A	23C8 58C7 60C1 67C6
ISENSE_CAL_EN	ISENSE_CAL_EN - @m38a_lib.M38A	58B7 76A8
ITPRESET_L	ITPRESET_L - @m38a_lib.M38A	11B3
ITP_TDO	ITP_TDO - @m38a_lib.M38A	11B3
ITS_ALIVE	ITS_ALIVE - @m38a_lib.M38A	6A7
ITS_PLUGGED_IN	ITS_PLUGGED_IN - @m38a_lib.M38A	6A7
KBC_MDE	KBC_MDE - @m38a_lib.M38A	58C2
LCD_PWM	LCD_PWM - @m38a_lib.M38A	94B1 94C3
LCD_PWM_R	LCD_PWM_R - @m38a_lib.M38A	94B2
LCD_PWREN_L	LCD_PWREN_L - @m38a_lib.M38A	94C8
LCD_PWREN_L_RC	LCD_PWREN_L_RC - @m38a_lib.M38A	94C7
LCD_SHOULD_ON	LCD_SHOULD_ON - @m38a_lib.M38A	6A6
LED_PP1V05_S0_N	LED_PP1V05_S0_N - @m38a_lib.M38A	81A4
LED_PP1V05_S0_P	LED_PP1V05_S0_P - @m38a_lib.M38A	81A4
LED_PP1V5_S0_N	LED_PP1V5_S0_N - @m38a_lib.M38A	80A3
LED_PP1V5_S0_P	LED_PP1V5_S0_P - @m38a_lib.M38A	80A4
LED_PP1V8_S3_N	LED_PP1V8_S3_N - @m38a_lib.M38A	79A4
LED_PP1V8_S3_P	LED_PP1V8_S3_P - @m38a_lib.M38A	79A4
LPC_AD<0>	LPC_AD<0> - @m38a_lib.M38A	21D4 58D7 60C4 67C6
LPC_AD<1>	LPC_AD<1> - @m38a_lib.M38A	21D4 58D7 60C4 67C6
LPC_AD<2>	LPC_AD<2> - @m38a_lib.M38A	21D4 58C7 60C1 67C6
LPC_AD<3>	LPC_AD<3> - @m38a_lib.M38A	21D4 58C7 60C1 67C6
LPC_FRAME_L	LPC_FRAME_L - @m38a_lib.M38A	21C5 58C7 60C4 67C6
LVDS_A_CLK_N	LVDS_A_CLK_N - @m38a_lib.M38A	13D5 19D2
	TP_LVDS_A_CLK_N - @m38a_lib.M38A	19D1
LVDS_A_CLK_P	LVDS_A_CLK_P - @m38a_lib.M38A	13C5 19D2
	TP_LVDS_A_CLK_P - @m38a_lib.M38A	19D1
LVDS_A_DATA_N<0>	LVDS_A_DATA_N<0> - @m38a_lib.M38A	13C5 19D2
LVDS_A_DATA_N<1>	LVDS_A_DATA_N<1> - @m38a_lib.M38A	13C5 19D2
LVDS_A_DATA_N<2>	LVDS_A_DATA_N<2> - @m38a_lib.M38A	13C5 19D2
LVDS_A_DATA_P<0>	LVDS_A_DATA_P<0> - @m38a_lib.M38A	13C5 19D2
LVDS_A_DATA_P<1>	LVDS_A_DATA_P<1> - @m38a_lib.M38A	13C5 19D2
LVDS_A_DATA_P<2>	LVDS_A_DATA_P<2> - @m38a_lib.M38A	13C5 19D2
LVDS_BKLTCTL	LVDS_BKLTCTL - @m38a_lib.M38A	13D5 19C2
	TP_LVDS_BKLTCTL - @m38a_lib.M38A	19C1
LVDS_BKLTEN	LVDS_BKLTEN - @m38a_lib.M38A	13D5 19C2
	TP_LVDS_BKLTEN - @m38a_lib.M38A	19C1
LVDS_B_CLK_N	LVDS_B_CLK_N - @m38a_lib.M38A	13C5 19D2
	TP_LVDS_B_CLK_N - @m38a_lib.M38A	19D1
LVDS_B_CLK_P	LVDS_B_CLK_P - @m38a_lib.M38A	13C5 19D2
	TP_LVDS_B_CLK_P - @m38a_lib.M38A	19D1
LVDS_B_DATA_N<0>	LVDS_B_DATA_N<0> - @m38a_lib.M38A	13C5 19D2
LVDS_B_DATA_N<1>	LVDS_B_DATA_N<1> - @m38a_lib.M38A	13C5 19D2
LVDS_B_DATA_N<2>	LVDS_B_DATA_N<2> - @m38a_lib.M38A	13C5 19D2
LVDS_B_DATA_P<0>	LVDS_B_DATA_P<0> - @m38a_lib.M38A	13C5 19D2
LVDS_B_DATA_P<1>	LVDS_B_DATA_P<1> - @m38a_lib.M38A	13C5 19D2
LVDS_B_DATA_P<2>	LVDS_B_DATA_P<2> - @m38a_lib.M38A	13C5 19D2
LVDS_CLKCTLA	LVDS_CLKCTLA - @m38a_lib.M38A	13D5 19C2
	TP_LVDS_CLKCTLA - @m38a_lib.M38A	19C1
LVDS_CLKCTLB	LVDS_CLKCTLB - @m38a_lib.M38A	13D5 19C2
	TP_LVDS_CLKCTLB - @m38a_lib.M38A	19C1
LVDS_DDC_CLK	LVDS_DDC_CLK - @m38a_lib.M38A	13D5 19C2
	TP_LVDS_DDC_CLK - @m38a_lib.M38A	19C1
LVDS_DDC_DATA	LVDS_DDC_DATA - @m38a_lib.M38A	13D5 19C2
	TP_LVDS_DDC_DATA - @m38a_lib.M38A	19C1
LVDS_IBG	LVDS_IBG - @m38a_lib.M38A	13D5 19C2
	TP_LVDS_IBG - @m38a_lib.M38A	19C1
LVDS_L_CLK_N	LVDS_L_CLK_N - @m38a_lib.M38A	93A3 93D2 94A6
LVDS_L_CLK_P	LVDS_L_CLK_P - @m38a_lib.M38A	93A3 93D2 94A7
LVDS_L_DATA_N<0>	LVDS_L_DATA_N<0> - @m38a_lib.M38A	93A3 93C2 94A6
LVDS_L_DATA_N<1>	LVDS_L_DATA_N<1> - @m38a_lib.M38A	93A3 93C2 94A7
LVDS_L_DATA_N<2>	LVDS_L_DATA_N<2> - @m38a_lib.M38A	93A3 93C2 94A6
LVDS_L_DATA_N<3>	LVDS_L_DATA_N<3> - @m38a_lib.M38A	93A3 94A6
LVDS_L_DATA_P<0>	LVDS_L_DATA_P<0> - @m38a_lib.M38A	93A3 93D2 94A7
LVDS_L_DATA_P<1>	LVDS_L_DATA_P<1> - @m38a_lib.M38A	93A3 93C2 94A6
LVDS_L_DATA_P<2>	LVDS_L_DATA_P<2> - @m38a_lib.M38A	93A3 93C2 94A7
LVDS_L_DATA_P<3>	LVDS_L_DATA_P<3> - @m38a_lib.M38A	93A3 94A7
LVDS_U_CLK_N	LVDS_U_CLK_N - @m38a_lib.M38A	93B3 94B6
LVDS_U_CLK_P	LVDS_U_CLK_P - @m38a_lib.M38A	93B3 94A7
LVDS_U_DATA_N<0>	LVDS_U_DATA_N<0> - @m38a_lib.M38A	93B3 94B7
LVDS_U_DATA_N<1>	LVDS_U_DATA_N<1> - @m38a_lib.M38A	93B3 94B7
LVDS_U_DATA_N<2>	LVDS_U_DATA_N<2> - @m38a_lib.M38A	93B3 94B7
LVDS_U_DATA_N<3>	LVDS_U_DATA_N<3> - @m38a_lib.M38A	93B3 94A6
LVDS_U_DATA_P<0>	LVDS_U_DATA_P<0> - @m38a_lib.M38A	93B3 94B6
LVDS_U_DATA_P<1>	LVDS_U_DATA_P<1> - @m38a_lib.M38A	93B3 94B6
LVDS_U_DATA_P<2>	LVDS_U_DATA_P<2> - @m38a_lib.M38A	93B3 94B6
LVDS_U_DATA_P<3>	LVDS_U_DATA_P<3> - @m38a_lib.M38A	93B3 94A7
LVDS_VDDEN	LVDS_VDDEN - @m38a_lib.M38A	13D5 19C2
	TP_LVDS_VDDEN - @m38a_lib.M38A	19C1
LVDS_VREFH	LVDS_VREFH - @m38a_lib.M38A	13D5 19C2
	TP_LVDS_VREFH - @m38a_lib.M38A	19C1
LVDS_VREFL	LVDS_VREFL - @m38a_lib.M38A	13D5 19C2
	TP_LVDS_VREFL - @m38a_lib.M38A	19C1
MEMVTT_VREF	MEMVTT_VREF - @m38a_lib.M38A	31B4
MEM_A_A<0>	MEM_A_A<0> - @m38a_lib.M38A	15C5 28B3
MEM_A_A<13..0>	MEM_A_A<13..0> - @m38a_lib.M38A	30C6
MEM_A_A<1>	MEM_A_A<1> - @m38a_lib.M38A	15C5 28B6
MEM_A_A<2>	MEM_A_A<2> - @m38a_lib.M38A	15C5 28B3
MEM_A_A<3>	MEM_A_A<3> - @m38a_lib.M38A	15B5 28B6
MEM_A_A<4>	MEM_A_A<4> - @m38a_lib.M38A	15B5 28B3
MEM_A_A<5>	MEM_A_A<5> - @m38a_lib.M38A	15B5 28B6
MEM_A_A<6>	MEM_A_A<6> - @m38a_lib.M38A	15B5 28C3
MEM_A_A<7>	MEM_A_A<7> - @m38a_lib.M38A	15B5 28C3
MEM_A_A<8>	MEM_A_A<8> - @m38a_lib.M38A	15B5 28C6
MEM_A_A<9>	MEM_A_A<9> - @m38a_lib.M38A	15B5 28C6
MEM_A_A<10>	MEM_A_A<10> - @m38a_lib.M38A	15B5 28B6
MEM_A_A<11>	MEM_A_A<11> - @m38a_lib.M38A	15B5 28C3
MEM_A_A<12>	MEM_A_A<12> - @m38a_lib.M38A	15B5 28C6

MEM_A_A<13>	MEM_A_A<13> - @m38a_lib.M38A	15B5 28B3
MEM_A_BS<0>	MEM_A_BS<0> - @m38a_lib.M38A	15D5 28B6
MEM_A_BS<2..0>	MEM_A_BS<2..0> - @m38a_lib.M38A	30C6
MEM_A_BS<1>	MEM_A_BS<1> - @m38a_lib.M38A	15D5 28B3
MEM_A_BS<2>	MEM_A_BS<2> - @m38a_lib.M38A	15D5 28C6
MEM_A_CAS_L	MEM_A_CAS_L - @m38a_lib.M38A	15D5 28B6 30B6
MEM_A_DM<0>	MEM_A_DM<0> - @m38a_lib.M38A	15D5 28D3
MEM_A_DM<1>	MEM_A_DM<1> - @m38a_lib.M38A	15D5 28D3
MEM_A_DM<2>	MEM_A_DM<2> - @m38a_lib.M38A	15D5 28C3
MEM_A_DM<3>	MEM_A_DM<3> - @m38a_lib.M38A	15C5 28C6
MEM_A_DM<4>	MEM_A_DM<4> - @m38a_lib.M38A	15C5 28B3
MEM_A_DM<5>	MEM_A_DM<5> - @m38a_lib.M38A	15C5 28A6
MEM_A_DM<6>	MEM_A_DM<6> - @m38a_lib.M38A	15C5 28A3
MEM_A_DM<7>	MEM_A_DM<7> - @m38a_lib.M38A	15C5 28A6
MEM_A_DQ<0>	MEM_A_DQ<0> - @m38a_lib.M38A	15D7 28D6
MEM_A_DQ<1>	MEM_A_DQ<1> - @m38a_lib.M38A	15D7 28D6
MEM_A_DQ<2>	MEM_A_DQ<2> - @m38a_lib.M38A	15D7 28D6
MEM_A_DQ<3>	MEM_A_DQ<3> - @m38a_lib.M38A	15D7 28D6
MEM_A_DQ<4>	MEM_A_DQ<4> - @m38a_lib.M38A	15D7 28D3
MEM_A_DQ<5>	MEM_A_DQ<5> - @m38a_lib.M38A	15D7 28D3
MEM_A_DQ<6>	MEM_A_DQ<6> - @m38a_lib.M38A	15D7 28D3
MEM_A_DQ<7>	MEM_A_DQ<7> - @m38a_lib.M38A	5B7 15D7 28D3
MEM_A_DQ<8>	MEM_A_DQ<8> - @m38a_lib.M38A	15C7 28D6
MEM_A_DQ<9>	MEM_A_DQ<9> - @m38a_lib.M38A	15C7 28D6
MEM_A_DQ<10>	MEM_A_DQ<10> - @m38a_lib.M38A	15C7 28D6
MEM_A_DQ<11>	MEM_A_DQ<11> - @m38a_lib.M38A	15C7 28D6
MEM_A_DQ<12>	MEM_A_DQ<12> - @m38a_lib.M38A	15C7 28D3
MEM_A_DQ<13>	MEM_A_DQ<13> - @m38a_lib.M38A	15C7 28D3
MEM_A_DQ<14>	MEM_A_DQ<14> - @m38a_lib.M38A	5B7 15C7 28D3
MEM_A_DQ<15>	MEM_A_DQ<15> - @m38a_lib.M38A	15C7 28D3
MEM_A_DQ<16>	MEM_A_DQ<16> - @m38a_lib.M38A	5B7 15C7 28C6
MEM_A_DQ<17>	MEM_A_DQ<17> - @m38a_lib.M38A	15C7 28C6
MEM_A_DQ<18>	MEM_A_DQ<18> - @m38a_lib.M38A	15C7 28C6
MEM_A_DQ<19>	MEM_A_DQ<19> - @m38a_lib.M38A	15C7 28C6
MEM_A_DQ<20>	MEM_A_DQ<20> - @m38a_lib.M38A	15C7 28C3
MEM_A_DQ<21>	MEM_A_DQ<21> - @m38a_lib.M38A	15C7 28C3
MEM_A_DQ<22>	MEM_A_DQ<22> - @m38a_lib.M38A	15C7 28C3
MEM_A_DQ<23>	MEM_A_DQ<23> - @m38a_lib.M38A	15C7 28C3
MEM_A_DQ<24>	MEM_A_DQ<24> - @m38a_lib.M38A	15C7 28C6
MEM_A_DQ<25>	MEM_A_DQ<25> - @m38a_lib.M38A	5B7 15C7 28C6
MEM_A_DQ<26>	MEM_A_DQ<26> - @m38a_lib.M38A	15C7 28C6
MEM_A_DQ<27>	MEM_A_DQ<27> - @m38a_lib.M38A	15C7 28C6
MEM_A_DQ<28>	MEM_A_DQ<28> - @m38a_lib.M38A	15C7 28C3
MEM_A_DQ<29>	MEM_A_DQ<29> - @m38a_lib.M38A	15C7 28C3
MEM_A_DQ<30>	MEM_A_DQ<30> - @m38a_lib.M38A	15C7 28C3
MEM_A_DQ<31>	MEM_A_DQ<31> - @m38a_lib.M38A	15C7 28C3
MEM_A_DQ<32>	MEM_A_DQ<32> - @m38a_lib.M38A	15C7 28B6
MEM_A_DQ<33>	MEM_A_DQ<33> - @m38a_lib.M38A	15C7 28B6
MEM_A_DQ<34>	MEM_A_DQ<34> - @m38a_lib.M38A	15B7 28B6
MEM_A_DQ<35>	MEM_A_DQ<35> - @m38a_lib.M38A	15B7 28B6
MEM_A_DQ<36>	MEM_A_DQ<36> - @m38a_lib.M38A	15B7 28B3
MEM_A_DQ<37>	MEM_A_DQ<37> - @m38a_lib.M38A	15B7 28B3
MEM_A_DQ<38>	MEM_A_DQ<38> - @m38a_lib.M38A	15B7 28B3
MEM_A_DQ<39>	MEM_A_DQ<39> - @m38a_lib.M38A	5B7 15B7 28B3
MEM_A_DQ<40>	MEM_A_DQ<40> - @m38a_lib.M38A	15B7 28B6
MEM_A_DQ<41>	MEM_A_DQ<41> - @m38a_lib.M38A	15B7 28B6
MEM_A_DQ<42>	MEM_A_DQ<42> - @m38a_lib.M38A	15B7 28A6
MEM_A_DQ<43>	MEM_A_DQ<43> - @m38a_lib.M38A	15B7 28A6
MEM_A_DQ<44>	MEM_A_DQ<44> - @m38a_lib.M38A	15B7 28B3
MEM_A_DQ<45>	MEM_A_DQ<45> - @m38a_lib.M38A	15B7 28B3
MEM_A_DQ<46>	MEM_A_DQ<46> - @m38a_lib.M38A	15B7 28A3
MEM_A_DQ<47>	MEM_A_DQ<47> - @m38a_lib.M38A	5B7 15B7 28A3
MEM_A_DQ<48>	MEM_A_DQ<48> - @m38a_lib.M38A	15B7 28A6
MEM_A_DQ<49>	MEM_A_DQ<49> - @m38a_lib.M38A	15B7 28A6
MEM_A_DQ<50>	MEM_A_DQ<50> - @m38a_lib.M38A	15B7 28A6
MEM_A_DQ<51>	MEM_A_DQ<51> - @m38a_lib.M38A	15B7 28A6
MEM_A_DQ<52>	MEM_A_DQ<52> - @m38a_lib.M38A	15B7 28A3
MEM_A_DQ<53>	MEM_A_DQ<53> - @m38a_lib.M38A	15B7 28A3
MEM_A_DQ<54>	MEM_A_DQ<54> - @m38a_lib.M38A	5B7 15B7 28A3
MEM_A_DQ<55>	MEM_A_DQ<55> - @m38a_lib.M38A	15B7 28A3
MEM_A_DQ<56>	MEM_A_DQ<56> - @m38a_lib.M38A	15B7 28A6
MEM_A_DQ<57>	MEM_A_DQ<57> - @m38a_lib.M38A	15B7 28A6
MEM_A_DQ<58>	MEM_A_DQ<58> - @m38a_lib.M38A	15B7 28A6
MEM_A_DQ<59>	MEM_A_DQ<59> - @m38a_lib.M38A	5B7 15B7 28A6
MEM_A_DQ<60>	MEM_A_DQ<60> - @m38a_lib.M38A	15A7 28A3
MEM_A_DQ<61>	MEM_A_DQ<61> - @m38a_lib.M38A	15A7 28A3
MEM_A_DQ<62>	MEM_A_DQ<62> - @m38a_lib.M38A	15A7 28A3
MEM_A_DQ<63>	MEM_A_DQ<63> - @m38a_lib.M38A	15A7 28A3
MEM_A_DQS_N<0>	MEM_A_DQS_N<0> - @m38a_lib.M38A	5B7 15C5 28D6
MEM_A_DQS_N<1>	MEM_A_DQS_N<1> - @m38a_lib.M38A	5B7 15C5 28D6
MEM_A_DQS_N<2>	MEM_A_DQS_N<2> - @m38a_lib.M38A	5B7 15C5 28C6
MEM_A_DQS_N<3>	MEM_A_DQS_N<3> - @m38a_lib.M38A	5B7 15C5 28C3
MEM_A_DQS_N<4>	MEM_A_DQS_N<4> - @m38a_lib.M38A	5B7 15C5 28B6
MEM_A_DQS_N<5>	MEM_A_DQS_N<5> - @m38a_lib.M38A	5B7 15C5 28B3
MEM_A_DQS_N<6>	MEM_A_DQS_N<6> - @m38a_lib.M38A	5B7 15C5 28A6
MEM_A_DQS_N<7>	MEM_A_DQS_N<7> - @m38a_lib.M38A	5B7 15C5 28A3
MEM_A_DQS_P<0>	MEM_A_DQS_P<0> - @m38a_lib.M38A	5B7 15C5 28D6
MEM_A_DQS_P<1>	MEM_A_DQS_P<1> - @m38a_lib.M38A	5B7 15C5 28D6
MEM_A_DQS_P<2>	MEM_A_DQS_P<2> - @m38a_lib.M38A	5B7 15C5 28C6
MEM_A_DQS_P<3>	MEM_A_DQS_P<3> - @m38a_lib.M38A	5B7 15C5 28C3
MEM_A_DQS_P<4>	MEM_A_DQS_P<4> - @m38a_lib.M38A	5B7 15C5 28B6
MEM_A_DQS_P<5>	MEM_A_DQS_P<5> - @m38a_lib.M38A	5B7 15C5 28A3
MEM_A_DQS_P<6>	MEM_A_DQS_P<6> - @m38a_lib.M38A	5B7 15C5 28A6
MEM_A_DQS_P<7>	MEM_A_DQS_P<7> - @m38a_lib.M38A	5B7 15C5 28A3
MEM_A_RAS_L	MEM_A_RAS_L - @m38a_lib.M38A	15B5 28B3 30B6
MEM_A_WE_L	MEM_A_WE_L - @m38a_lib.M38A	15B5 28B6 30B6
MEM_B_A<0>	MEM_B_A<0> - @m38a_lib.M38A	15C2 29B3 30B5
MEM_B_A<1>	MEM_B_A<1> - @m38a_lib.M38A	15C2 29B6 30B5
MEM_B_A<2>	MEM_B_A<2> - @m38a_lib.M38A	15C2 29B3 30B5
MEM_B_A<3>	MEM_B_A<3> - @m38a_lib.M38A	15B2 29B6 30B5
MEM_B_A<4>	MEM_B_A<4> - @m38a_lib.M38A	15B2 29B3 30B5
MEM_B_A<5>	MEM_B_A<5> - @m38a_lib.M38A	15B2 29B6 30B5
MEM_B_A<6>	MEM_B_A<6> - @m38a_lib.M38A	15B2 29C3 30B5
MEM_B_A<7>	MEM_B_A<7> - @m38a_lib.M38A	15B2 29C3 30B5
MEM_B_A<8>	MEM_B_A<8> - @m38a_lib.M38A	15B2 29C6 30B5
MEM_B_A<9>	MEM_B_A<9> - @m38a_lib.M38A	15B2 29C6 30B5
MEM_B_A<10>	MEM_B_A<10> - @m38a_lib.M38A	15B2 29B6 30B5
MEM_B_A<11>	MEM_B_A<11> - @m38a_lib.M38A	15B2 29C3 30A5
MEM_B_A<12>	MEM_B_A<12> - @m38a_lib.M38A	15B2 29C6 30A5
MEM_B_A<13>	MEM_B_A<13> - @m38a_lib.M38A	15B2 29B3 30A5
MEM_B_BS<0>	MEM_B_BS<0> - @m38a_lib.M38A	15D2 29B6
MEM_B_BS<2..0>	MEM_B_BS<2..0> - @m38a_lib.M38A	30A6
MEM_B_BS<1>	MEM_B_BS<1> - @m38a_lib.M38A	15D2 29B3
MEM_B_BS<2>	MEM_B_BS<2> - @m38a_lib.M38A	15D2 29C6
MEM_B_CAS_L	MEM_B_CAS_L - @m38a_lib.M38A	15D2 29B6 30A6
MEM_B_DM<0>	MEM_B_DM<0> - @m38a_lib.M38A	15D2 29D3
MEM_B_DM<1>	MEM_B_DM<1> - @m38a_lib.M38A	15D2 29D3
MEM_B_DM<2>	MEM_B_DM<2> - @m38a_lib.M38A	15D2 29C3
MEM_B_DM<3>	MEM_B_DM<3> - @m38a_lib.M38A	15C2 29C6
MEM_B_DM<4>	MEM_B_DM<4> - @m38a_lib.M38A	15C2 29B3
MEM_B_DM<5>	MEM_B_DM<5> - @m38a_lib.M38A	15C2 29A6
MEM_B_DM<6>	MEM_B_DM<6> - @m38a_lib.M38A	15C2 29A3
MEM_B_DM<7>	MEM_B_DM<7> - @m38a_lib.M38A	15C2 29A6
MEM_B_DQ<0>	MEM_B_DQ<0> - @m38a_lib.M38A	15D4 29D6

MEM_B_DQ<1>	MEM_B_DQ<1> - @m38a_lib.M38A	15D4 29D6
MEM_B_DQ<2>	MEM_B_DQ<2> - @m38a_lib.M38A	15D4 29D6
MEM_B_DQ<3>	MEM_B_DQ<3> - @m38a_lib.M38A	15D4 29D6
MEM_B_DQ<4>	MEM_B_DQ<4> - @m38a_lib.M38A	15D4 29D3
MEM_B_DQ<5>	MEM_B_DQ<5> - @m38a_lib.M38A	15D4 29D3
MEM_B_DQ<6>	MEM_B_DQ<6> - @m38a_lib.M38A	5A7 15D4 29D3
MEM_B_DQ<7>	MEM_B_DQ<7> - @m38a_lib.M38A	15D4 29D3
MEM_B_DQ<8>	MEM_B_DQ<8> - @m38a_lib.M38A	5A7 15C4 29D6
MEM_B_DQ<9>	MEM_B_DQ<9> - @m38a_lib.M38A	15C4 29D6
MEM_B_DQ<10>	MEM_B_DQ<10> - @m38a_lib.M38A	15C4 29D6
MEM_B_DQ<11>	MEM_B_DQ<11> - @m38a_lib.M38A	15C4 29D6
MEM_B_DQ<12>	MEM_B_DQ<12> - @m38a_lib.M38A	15C4 29D3
MEM_B_DQ<13>	MEM_B_DQ<13> - @m38a_lib.M38A	15C4 29D3
MEM_B_DQ<14>	MEM_B_DQ<14> - @m38a_lib.M38A	15C4 29D3
MEM_B_DQ<15>	MEM_B_DQ<15> - @m38a_lib.M38A	15C4 29D3
MEM_B_DQ<16>	MEM_B_DQ<16> - @m38a_lib.M38A	15C4 29C6
MEM_B_DQ<17>	MEM_B_DQ<17> - @m38a_lib.M38A	15C4 29C6
MEM_B_DQ<18>	MEM_B_DQ<18> - @m38a_lib.M38A	15C4 29C6
MEM_B_DQ<19>	MEM_B_DQ<19> - @m38a_lib.M38A	15C4 29C6
MEM_B_DQ<20>	MEM_B_DQ<20> - @m38a_lib.M38A	15C4 29C3
MEM_B_DQ<21>	MEM_B_DQ<21> - @m38a_lib.M38A	15C4 29C3
MEM_B_DQ<22>	MEM_B_DQ<22> - @m38a_lib.M38A	15C4 29C3
MEM_B_DQ<23>	MEM_B_DQ<23> - @m38a_lib.M38A	5A7 15C4 29C3
MEM_B_DQ<24>	MEM_B_DQ<24> - @m38a_lib.M38A	15C4 29C6
MEM_B_DQ<25>	MEM_B_DQ<25> - @m38a_lib.M38A	5A7 15C4 29C6
MEM_B_DQ<26>	MEM_B_DQ<26> - @m38a_lib.M38A	15C4 29C6
MEM_B_DQ<27>	MEM_B_DQ<27> - @m38a_lib.M38A	15C4 29C6
MEM_B_DQ<28>	MEM_B_DQ<28> - @m38a_lib.M38A	15C4 29C3
MEM_B_DQ<29>	MEM_B_DQ<29> - @m38a_lib.M38A	15C4 29C3
MEM_B_DQ<30>	MEM_B_DQ<30> - @m38a_lib.M38A	15C4 29C3
MEM_B_DQ<31>	MEM_B_DQ<31> - @m38a_lib.M38A	15C4 29C3
MEM_B_DQ<32>	MEM_B_DQ<32> - @m38a_lib.M38A	15C4 29B6
MEM_B_DQ<33>	MEM_B_DQ<33> - @m38a_lib.M38A	15C4 29B6
MEM_B_DQ<34>	MEM_B_DQ<34> - @m38a_lib.M38A	15B4 29B6
MEM_B_DQ<35>	MEM_B_DQ<35> - @m38a_lib.M38A	15B4 29B6
MEM_B_DQ<36>	MEM_B_DQ<36> - @m38a_lib.M38A	15B4 29B3
MEM_B_DQ<37>	MEM_B_DQ<37> - @m38a_lib.M38A	15B4 29B3
MEM_B_DQ<38>	MEM_B_DQ<38> - @m38a_lib.M38A	5A7 15B4 29B3
MEM_B_DQ<39>	MEM_B_DQ<39> - @m38a_lib.M38A	15B4 29B3
MEM_B_DQ<40>	MEM_B_DQ<40> - @m38a_lib.M38A	15B4 29B6
MEM_B_DQ<41>	MEM_B_DQ<41> - @m38a_lib.M38A	15B4 29B6
MEM_B_DQ<42>	MEM_B_DQ<42> - @m38a_lib.M38A	15B4 29A6
MEM_B_DQ<43>	MEM_B_DQ<43> - @m38a_lib.M38A	15B4 29A6
MEM_B_DQ<44>	MEM_B_DQ<44> - @m38a_lib.M38A	5A7 15B4 29B3
MEM_B_DQ<45>	MEM_B_DQ<45> - @m38a_lib.M38A	15B4 29B3
MEM_B_DQ<46>	MEM_B_DQ<46> - @m38a_lib.M38A	15B4 29A3
MEM_B_DQ<47>	MEM_B_DQ<47> - @m38a_lib.M38A	15B4 29A3
MEM_B_DQ<48>	MEM_B_DQ<48> - @m38a_lib.M38A	5A7 15B4 29A6
MEM_B_DQ<49>	MEM_B_DQ<49> - @m38a_lib.M38A	15B4 29A6
MEM_B_DQ<50>	MEM_B_DQ<50> - @m38a_lib.M38A	15B4 29A6
MEM_B_DQ<51>	MEM_B_DQ<51> - @m38a_lib.M38A	15B4 29A6
MEM_B_DQ<52>	MEM_B_DQ<52> - @m38a_lib.M38A	15B4 29A3
MEM_B_DQ<53>	MEM_B_DQ<53> - @m38a_lib.M38A	15B4 29A3
MEM_B_DQ<54>	MEM_B_DQ<54> - @m38a_lib.M38A	15B4 29A3
MEM_B_DQ<55>	MEM_B_DQ<55> - @m38a_lib.M38A	15B4 29A3
MEM_B_DQ<56>	MEM_B_DQ<56> - @m38a_lib.M38A	15B4 29A6
MEM_B_DQ<57>	MEM_B_DQ<57> - @m38a_lib.M38A	15B4 29A6
MEM_B_DQ<58>	MEM_B_DQ<58> - @m38a_lib.M38A	15B4 29A6
MEM_B_DQ<59>	MEM_B_DQ<59> - @m38a_lib.M38A	15B4 29A6
MEM_B_DQ<60>	MEM_B_DQ<60> - @m38a_lib.M38A	15A4 29A3
MEM_B_DQ<61>	MEM_B_DQ<61> - @m38a_lib.M38A	15A4 29A3
MEM_B_DQ<62>	MEM_B_DQ<62> - @m38a_lib.M38A	5A7 15A4 29A3
MEM_B_DQ<63>	MEM_B_DQ<63> - @m38a_lib.M38A	15A4 29A3
MEM_B_DQS_N<0>	MEM_B_DQS_N<0> - @m38a_lib.M38A	5A7 15C2 29D6
MEM_B_DQS_N<1>	MEM_B_DQS_N<1> - @m38a_lib.M38A	5A7 15C2 29D6
MEM_B_DQS_N<2>	MEM_B_DQS_N<2> - @m38a_lib.M38A	5A7 15C2 29C6
MEM_B_DQS_N<3>	MEM_B_DQS_N<3> - @m38a_lib.M38A	5A7 15C2 29C3
MEM_B_DQS_N<4>	MEM_B_DQS_N<4> - @m38a_lib.M38A	5A7 15C2 29B6
MEM_B_DQS_N<5>	MEM_B_DQS_N<5> - @m38a_lib.M38A	5A7 15C2 29B3
MEM_B_DQS_N<6>	MEM_B_DQS_N<6> - @m38a_lib.M38A	5A7 15C2 29A6
MEM_B_DQS_N<7>	MEM_B_DQS_N<7> - @m38a_lib.M38A	5A7 15C2 29A3
MEM_B_DQS_P<0>	MEM_B_DQS_P<0> - @m38a_lib.M38A	5A7 15C2 29D6
MEM_B_DQS_P<1>	MEM_

PCI_AD<17>	PCI_AD<17> - @m38a_lib.M38A	22B7 44C5
PCI_AD<18>	PCI_AD<18> - @m38a_lib.M38A	22B7 44C5
PCI_AD<19>	PCI_AD<19> - @m38a_lib.M38A	22A7 44C6
PCI_AD<20>	PCI_AD<20> - @m38a_lib.M38A	22A7 44C5
PCI_AD<21>	PCI_AD<21> - @m38a_lib.M38A	22A7 44C5
PCI_AD<22>	PCI_AD<22> - @m38a_lib.M38A	22A7 44C5
PCI_AD<23>	PCI_AD<23> - @m38a_lib.M38A	22A7 44C5
PCI_AD<24>	PCI_AD<24> - @m38a_lib.M38A	22A7 44C5
PCI_AD<25>	PCI_AD<25> - @m38a_lib.M38A	22A7 44C5
PCI_AD<26>	PCI_AD<26> - @m38a_lib.M38A	22A7 44C5
PCI_AD<27>	PCI_AD<27> - @m38a_lib.M38A	22A7 44C5
PCI_AD<28>	PCI_AD<28> - @m38a_lib.M38A	22A7 44C5
PCI_AD<29>	PCI_AD<29> - @m38a_lib.M38A	22A7 44C5
PCI_AD<30>	PCI_AD<30> - @m38a_lib.M38A	22A7 44C5
PCI_AD<31>	PCI_AD<31> - @m38a_lib.M38A	22A7 44B5
PCI_CLK_FW	PCI_CLK_FW - @m38a_lib.M38A	34C4 44B5
PCI_CLK_PORT80	PCI_CLK_PORT80 - @m38a_lib.M38A	34B4 60C1
PCI_CLK_SB	PCI_CLK_SB - @m38a_lib.M38A	5C8 22A6 34B4
PCI_CLK_SMC	PCI_CLK_SMC - @m38a_lib.M38A	34C4 58C7
PCI_CLK_TPM	PCI_CLK_TPM - @m38a_lib.M38A	34C4 67C6
PCI_C_BE_L<0>	PCI_C_BE_L<0> - @m38a_lib.M38A	22B6 44B5
PCI_C_BE_L<1>	PCI_C_BE_L<1> - @m38a_lib.M38A	22B6 44B5
PCI_C_BE_L<2>	PCI_C_BE_L<2> - @m38a_lib.M38A	22B6 44B5
PCI_C_BE_L<3>	PCI_C_BE_L<3> - @m38a_lib.M38A	22B6 44B5
PCI_DEVSEL_L	PCI_DEVSEL_L - @m38a_lib.M38A	22A6 26D2 44B5
PCI_FRAME_L	PCI_FRAME_L - @m38a_lib.M38A	22A7 26D2 44B5
PCI_GNT1_L	PCI_GNT1_L - @m38a_lib.M38A	22B6 44B5
PCI_IDSEL	PCI_IDSEL - @m38a_lib.M38A	44B5
PCI_IRDY_L	PCI_IRDY_L - @m38a_lib.M38A	22A6 26D2 44B5
PCI_LOCK_L	PCI_LOCK_L - @m38a_lib.M38A	22A6 26D2
PCI_PAR	PCI_PAR - @m38a_lib.M38A	22A6 44B5
PCI_PERR_L	PCI_PERR_L - @m38a_lib.M38A	22A6 26D2 44B5
PCI_PME_FW_L	PCI_PME_FW_L - @m38a_lib.M38A	22B5 44B5
PCI_REQ0_L	PCI_REQ0_L - @m38a_lib.M38A	22B6 26D2
PCI_REQ1_L	PCI_REQ1_L - @m38a_lib.M38A	22B6 26D2 44B5
PCI_REQ2_L	PCI_REQ2_L - @m38a_lib.M38A	22B6 26D2
PCI_REQ3_L	PCI_REQ3_L - @m38a_lib.M38A	22B6 26D2
PCI_RST_FW_L	PCI_RST_FW_L - @m38a_lib.M38A	44A7 44B5
PCI_RST_L	PCI_RST_L - @m38a_lib.M38A	22A6 44A8
PCI_SERR_L	PCI_SERR_L - @m38a_lib.M38A	22A6 26D2 44B5
PCI_STOP_L	PCI_STOP_L - @m38a_lib.M38A	22A6 26D2 44B5
PCI_TRDY_L	PCI_TRDY_L - @m38a_lib.M38A	22A6 26D2 44B5
PEG_COMP	PEG_COMP - @m38a_lib.M38A	13D3
PEG_D2R_C_N<0>	PEG_D2R_C_N<0> - @m38a_lib.M38A	84D3
PEG_D2R_C_N<1>	PEG_D2R_C_N<1> - @m38a_lib.M38A	84D3
PEG_D2R_C_N<2>	PEG_D2R_C_N<2> - @m38a_lib.M38A	84D3
PEG_D2R_C_N<3>	PEG_D2R_C_N<3> - @m38a_lib.M38A	84D3
PEG_D2R_C_N<4>	PEG_D2R_C_N<4> - @m38a_lib.M38A	84C3
PEG_D2R_C_N<5>	PEG_D2R_C_N<5> - @m38a_lib.M38A	84C3
PEG_D2R_C_N<6>	PEG_D2R_C_N<6> - @m38a_lib.M38A	84C3
PEG_D2R_C_N<7>	PEG_D2R_C_N<7> - @m38a_lib.M38A	84C3
PEG_D2R_C_N<8>	PEG_D2R_C_N<8> - @m38a_lib.M38A	84C3
PEG_D2R_C_N<9>	PEG_D2R_C_N<9> - @m38a_lib.M38A	84C3
PEG_D2R_C_N<10>	PEG_D2R_C_N<10> - @m38a_lib.M38A	84B3
PEG_D2R_C_N<11>	PEG_D2R_C_N<11> - @m38a_lib.M38A	84B3
PEG_D2R_C_N<12>	PEG_D2R_C_N<12> - @m38a_lib.M38A	84B3
PEG_D2R_C_N<13>	PEG_D2R_C_N<13> - @m38a_lib.M38A	84B3
PEG_D2R_C_N<14>	PEG_D2R_C_N<14> - @m38a_lib.M38A	84B3
PEG_D2R_C_N<15>	PEG_D2R_C_N<15> - @m38a_lib.M38A	84B3
PEG_D2R_C_P<0>	PEG_D2R_C_P<0> - @m38a_lib.M38A	84D3
PEG_D2R_C_P<1>	PEG_D2R_C_P<1> - @m38a_lib.M38A	84D3
PEG_D2R_C_P<2>	PEG_D2R_C_P<2> - @m38a_lib.M38A	84D3
PEG_D2R_C_P<3>	PEG_D2R_C_P<3> - @m38a_lib.M38A	84D3
PEG_D2R_C_P<4>	PEG_D2R_C_P<4> - @m38a_lib.M38A	84D3
PEG_D2R_C_P<5>	PEG_D2R_C_P<5> - @m38a_lib.M38A	84C3
PEG_D2R_C_P<6>	PEG_D2R_C_P<6> - @m38a_lib.M38A	84C3
PEG_D2R_C_P<7>	PEG_D2R_C_P<7> - @m38a_lib.M38A	84C3
PEG_D2R_C_P<8>	PEG_D2R_C_P<8> - @m38a_lib.M38A	84C3
PEG_D2R_C_P<9>	PEG_D2R_C_P<9> - @m38a_lib.M38A	84C3
PEG_D2R_C_P<10>	PEG_D2R_C_P<10> - @m38a_lib.M38A	84B3
PEG_D2R_C_P<11>	PEG_D2R_C_P<11> - @m38a_lib.M38A	84B3
PEG_D2R_C_P<12>	PEG_D2R_C_P<12> - @m38a_lib.M38A	84B3
PEG_D2R_C_P<13>	PEG_D2R_C_P<13> - @m38a_lib.M38A	84B3
PEG_D2R_C_P<14>	PEG_D2R_C_P<14> - @m38a_lib.M38A	84B3
PEG_D2R_C_P<15>	PEG_D2R_C_P<15> - @m38a_lib.M38A	84B3
PEG_D2R_N<0>	PEG_D2R_N<0> - @m38a_lib.M38A	13D3 84B1
PEG_D2R_N<1>	PEG_D2R_N<1> - @m38a_lib.M38A	13D3 84B1
PEG_D2R_N<2>	PEG_D2R_N<2> - @m38a_lib.M38A	13D3 84B1
PEG_D2R_N<3>	PEG_D2R_N<3> - @m38a_lib.M38A	13D3 84B1
PEG_D2R_N<4>	PEG_D2R_N<4> - @m38a_lib.M38A	13D3 84B1
PEG_D2R_N<5>	PEG_D2R_N<5> - @m38a_lib.M38A	13D3 84B1
PEG_D2R_N<6>	PEG_D2R_N<6> - @m38a_lib.M38A	13D3 84C1
PEG_D2R_N<7>	PEG_D2R_N<7> - @m38a_lib.M38A	13D3 84C1
PEG_D2R_N<8>	PEG_D2R_N<8> - @m38a_lib.M38A	13D3 84C1
PEG_D2R_N<9>	PEG_D2R_N<9> - @m38a_lib.M38A	13D3 84C1
PEG_D2R_N<10>	PEG_D2R_N<10> - @m38a_lib.M38A	13C3 84C1
PEG_D2R_N<11>	PEG_D2R_N<11> - @m38a_lib.M38A	13C3 84C1
PEG_D2R_N<12>	PEG_D2R_N<12> - @m38a_lib.M38A	13C3 84D1
PEG_D2R_N<13>	PEG_D2R_N<13> - @m38a_lib.M38A	13C3 84D1
PEG_D2R_N<14>	PEG_D2R_N<14> - @m38a_lib.M38A	13C3 84D1
PEG_D2R_N<15>	PEG_D2R_N<15> - @m38a_lib.M38A	13C3 84D1
PEG_D2R_P<0>	PEG_D2R_P<0> - @m38a_lib.M38A	13C3 84C1
PEG_D2R_P<1>	PEG_D2R_P<1> - @m38a_lib.M38A	13C3 84C1
PEG_D2R_P<2>	PEG_D2R_P<2> - @m38a_lib.M38A	13C3 84C1
PEG_D2R_P<3>	PEG_D2R_P<3> - @m38a_lib.M38A	13C3 84C1
PEG_D2R_P<4>	PEG_D2R_P<4> - @m38a_lib.M38A	13C3 84D1
PEG_D2R_P<5>	PEG_D2R_P<5> - @m38a_lib.M38A	13C3 84D1
PEG_D2R_P<6>	PEG_D2R_P<6> - @m38a_lib.M38A	13C3 84D1
PEG_D2R_P<7>	PEG_D2R_P<7> - @m38a_lib.M38A	13C3 84D1
PEG_D2R_P<8>	PEG_D2R_P<8> - @m38a_lib.M38A	13C3 84D1
PEG_D2R_P<9>	PEG_D2R_P<9> - @m38a_lib.M38A	13C3 84D1
PEG_D2R_P<10>	PEG_D2R_P<10> - @m38a_lib.M38A	13C3 84C1
PEG_D2R_P<11>	PEG_D2R_P<11> - @m38a_lib.M38A	13C3 84D1
PEG_D2R_P<12>	PEG_D2R_P<12> - @m38a_lib.M38A	13C3 84D1
PEG_D2R_P<13>	PEG_D2R_P<13> - @m38a_lib.M38A	13C3 84D1
PEG_D2R_P<14>	PEG_D2R_P<14> - @m38a_lib.M38A	13C3 84D1
PEG_D2R_P<15>	PEG_D2R_P<15> - @m38a_lib.M38A	13C3 84D1
PEG_R2D_C_N<0>	PEG_R2D_C_N<0> - @m38a_lib.M38A	13C3 84B5
PEG_R2D_C_N<1>	PEG_R2D_C_N<1> - @m38a_lib.M38A	13C3 84B5
PEG_R2D_C_N<2>	PEG_R2D_C_N<2> - @m38a_lib.M38A	13C3 84B5
PEG_R2D_C_N<3>	PEG_R2D_C_N<3> - @m38a_lib.M38A	13B3 84B5
PEG_R2D_C_N<4>	PEG_R2D_C_N<4> - @m38a_lib.M38A	13B3 84B5
PEG_R2D_C_N<5>	PEG_R2D_C_N<5> - @m38a_lib.M38A	13B3 84C5
PEG_R2D_C_N<6>	PEG_R2D_C_N<6> - @m38a_lib.M38A	13B3 84C5
PEG_R2D_C_N<7>	PEG_R2D_C_N<7> - @m38a_lib.M38A	13B3 84C5
PEG_R2D_C_N<8>	PEG_R2D_C_N<8> - @m38a_lib.M38A	13B3 84C5
PEG_R2D_C_N<9>	PEG_R2D_C_N<9> - @m38a_lib.M38A	13B3 84C5
PEG_R2D_C_N<10>	PEG_R2D_C_N<10> - @m38a_lib.M38A	13B3 84C5
PEG_R2D_C_N<11>	PEG_R2D_C_N<11> - @m38a_lib.M38A	13B3 84C5
PEG_R2D_C_N<12>	PEG_R2D_C_N<12> - @m38a_lib.M38A	13B3 84D5
PEG_R2D_C_N<13>	PEG_R2D_C_N<13> - @m38a_lib.M38A	13B3 84D5
PEG_R2D_C_N<14>	PEG_R2D_C_N<14> - @m38a_lib.M38A	13B3 84D5
PEG_R2D_C_N<15>	PEG_R2D_C_N<15> - @m38a_lib.M38A	13B3 84D5
PEG_R2D_C_P<0>	PEG_R2D_C_P<0> - @m38a_lib.M38A	13B3 84B5

PEG_R2D_C_P<1>	PEG_R2D_C_P<1> - @m38a_lib.M38A	13B3 84B5
PEG_R2D_C_P<2>	PEG_R2D_C_P<2> - @m38a_lib.M38A	13B3 84B5
PEG_R2D_C_P<3>	PEG_R2D_C_P<3> - @m38a_lib.M38A	13B3 84B5
PEG_R2D_C_P<4>	PEG_R2D_C_P<4> - @m38a_lib.M38A	13B3 84B5
PEG_R2D_C_P<5>	PEG_R2D_C_P<5> - @m38a_lib.M38A	13B3 84B5
PEG_R2D_C_P<6>	PEG_R2D_C_P<6> - @m38a_lib.M38A	13B3 84C5
PEG_R2D_C_P<7>	PEG_R2D_C_P<7> - @m38a_lib.M38A	13B3 84C5
PEG_R2D_C_P<8>	PEG_R2D_C_P<8> - @m38a_lib.M38A	13B3 84C5
PEG_R2D_C_P<9>	PEG_R2D_C_P<9> - @m38a_lib.M38A	13B3 84C5
PEG_R2D_C_P<10>	PEG_R2D_C_P<10> - @m38a_lib.M38A	13B3 84B5
PEG_R2D_C_P<11>	PEG_R2D_C_P<11> - @m38a_lib.M38A	13B3 84B5
PEG_R2D_C_P<12>	PEG_R2D_C_P<12> - @m38a_lib.M38A	13A3 84D5
PEG_R2D_C_P<13>	PEG_R2D_C_P<13> - @m38a_lib.M38A	13A3 84D5
PEG_R2D_C_P<14>	PEG_R2D_C_P<14> - @m38a_lib.M38A	13A3 84D5
PEG_R2D_C_P<15>	PEG_R2D_C_P<15> - @m38a_lib.M38A	13A3 84D5
PEG_R2D_N<0>	PEG_R2D_N<0> - @m38a_lib.M38A	84D4
PEG_R2D_N<1>	PEG_R2D_N<1> - @m38a_lib.M38A	84D4
PEG_R2D_N<2>	PEG_R2D_N<2> - @m38a_lib.M38A	84D4
PEG_R2D_N<3>	PEG_R2D_N<3> - @m38a_lib.M38A	84D4
PEG_R2D_N<4>	PEG_R2D_N<4> - @m38a_lib.M38A	84C4
PEG_R2D_N<5>	PEG_R2D_N<5> - @m38a_lib.M38A	84C4
PEG_R2D_N<6>	PEG_R2D_N<6> - @m38a_lib.M38A	84C4
PEG_R2D_N<7>	PEG_R2D_N<7> - @m38a_lib.M38A	84C4
PEG_R2D_N<8>	PEG_R2D_N<8> - @m38a_lib.M38A	84C4
PEG_R2D_N<9>	PEG_R2D_N<9> - @m38a_lib.M38A	84C4
PEG_R2D_N<10>	PEG_R2D_N<10> - @m38a_lib.M38A	84B4
PEG_R2D_N<11>	PEG_R2D_N<11> - @m38a_lib.M38A	84B4
PEG_R2D_N<12>	PEG_R2D_N<12> - @m38a_lib.M38A	84B4
PEG_R2D_N<13>	PEG_R2D_N<13> - @m38a_lib.M38A	84B4
PEG_R2D_N<14>	PEG_R2D_N<14> - @m38a_lib.M38A	84B4
PEG_R2D_N<15>	PEG_R2D_N<15> - @m38a_lib.M38A	84B4
PEG_R2D_P<0>	PEG_R2D_P<0> - @m38a_lib.M38A	84D4
PEG_R2D_P<1>	PEG_R2D_P<1> - @m38a_lib.M38A	84D4
PEG_R2D_P<2>	PEG_R2D_P<2> - @m38a_lib.M38A	84D4
PEG_R2D_P<3>	PEG_R2D_P<3> - @m38a_lib.M38A	84D4
PEG_R2D_P<4>	PEG_R2D_P<4> - @m38a_lib.M38A	84D4
PEG_R2D_P<5>	PEG_R2D_P<5> - @m38a_lib.M38A	84C4
PEG_R2D_P<6>	PEG_R2D_P<6> - @m38a_lib.M38A	84C4
PEG_R2D_P<7>	PEG_R2D_P<7> - @m38a_lib.M38A	84C4
PEG_R2D_P<8>	PEG_R2D_P<8> - @m38a_lib.M38A	84C4
PEG_R2D_P<9>	PEG_R2D_P<9> - @m38a_lib.M38A	84C4
PEG_R2D_P<10>	PEG_R2D_P<10> - @m38a_lib.M38A	84B4
PEG_R2D_P<11>	PEG_R2D_P<11> - @m38a_lib.M38A	84B4
PEG_R2D_P<12>	PEG_R2D_P<12> - @m38a_lib.M38A	84B4
PEG_R2D_P<13>	PEG_R2D_P<13> - @m38a_lib.M38A	84B4
PEG_R2D_P<14>	PEG_R2D_P<14> - @m38a_lib.M38A	84B4
PEG_R2D_P<15>	PEG_R2D_P<15> - @m38a_lib.M38A	84B4
PEG_RESET_L	PEG_RESET_L - @m38a_lib.M38A	6B7 84A5
PLT_RST_L	PLT_RST_L - @m38a_lib.M38A	6C8 22A6
PM_BATLOW_L	PM_BATLOW_L - @m38a_lib.M38A	23C1 58B7
PM_BMBUSY_L	PM_BMBUSY_L - @m38a_lib.M38A	14B6 23C5
PM_CLKRUN_L	PM_CLKRUN_L - @m38a_lib.M38A	5B8 23C8 44B5 58C5 60C4 67C6
PM_DPRSLPVR	PM_DPRSLPVR - @m38a_lib.M38A	14B7 23C3 75C7
PM_EXTTS_L<0>	PM_EXTTS_L<0> - @m38a_lib.M38A	14B7 58B7 59C5
	DIMM_OVERTEMP_L - @m38a_lib.M38A	28C3 29C3 59C6
PM_LAN_ENABLE	PM_LAN_ENABLE - @m38a_lib.M38A	23C3 58D7
PM_PWRBTN_L	PM_PWRBTN_L - @m38a_lib.M38A	23C3 58D7
PM_PWROK	PM_PWROK - @m38a_lib.M38A	77C5
PM_RI_L	PM_RI_L - @m38a_lib.M38A	23D5
PM_RSMRST_L	PM_RSMRST_L - @m38a_lib.M38A	23C1 58D7
PM_SB_PWROK	PM_SB_PWROK - @m38a_lib.M38A	23C3 26D6
PM_SLP_S3	PM_SLP_S3 - @m38a_lib.M38A	77D7 78B8 80C8 81C8
PM_SLP_S3_L	PM_SLP_S3_L - @m38a_lib.M38A	6C8 23C3 58C5 77D8 79A7 88A6
	MEMVTT_EN - @m38a_lib.M38A	31B5 79A6
PM_SLP_S4	PM_SLP_S4 - @m38a_lib.M38A	77A8 77C7 79C8 83C6
PM_SLP_S4_L	PM_SLP_S4_L - @m38a_lib.M38A	23C3 58C5 77C8
PM_SLP_S5_L	PM_SLP_S5_L - @m38a_lib.M38A	23C3 58C5
PM_STPCPU_L	PM_STPCPU_L - @m38a_lib.M38A	23C8 33C4
PM_STPPCI_L	PM_STPPCI_L - @m38a_lib.M38A	23C8 33C4
PM_SUS_STAT_L	PM_SUS_STAT_L - @m38a_lib.M38A	23C5 58C5 60C1 67C6
PM_SYSRST_L	PM_SYSRST_L - @m38a_lib.M38A	5B8 23C5 26C3 58B7
PM_THRMTRIP_L	PM_THRMTRIP_L - @m38a_lib.M38A	7C6 14B6 21C2 59C7
PM_THRM_L	PM_THRM_L - @m38a_lib.M38A	10D3 23C8 58B7
POWER_BUTTON_L	POWER_BUTTON_L - @m38a_lib.M38A	5D1 59C8
PP0V9_S0_PGOOD	PP0V9_S0_PGOOD - @m38a_lib.M38A	77D6 79A2
PP1V2_S0_GPU_VDDPLL	PP1V2_S0_GPU_VDDPLL - @m38a_lib.M38A	91B6
PP1V05_S0_PGOOD	PP1V05_S0_PGOOD - @m38a_lib.M38A	77D6 81B2
PP1V5_S0_NB_3GPLL_F	PP1V5_S0_NB_3GPLL_F - @m38a_lib.M38A	19A5
PP1V5_S0_NB_VCC3G	PP1V5_S0_NB_VCC3G - @m38a_lib.M38A	17D6 19A3
PP1V5_S0_NB_VCCA_3GP	PP1V5_S0_NB_VCCA_3GPLL - @m38a_lib.M38A	17D6 19A3
LL		
PP1V5_S0_NB_VCCA_DPL	PP1V5_S0_NB_VCCA_DPLLA - @m38a_lib.M38A	17C6 19C4
LA		
PP1V5_S0_NB_VCCA_DPL	PP1V5_S0_NB_VCCA_DPLLB - @m38a_lib.M38A	17C6 19C4
LB		
PP1V5_S0_NB_VCCA_HPL	PP1V5_S0_NB_VCCA_HPLL - @m38a_lib.M38A	17C6 19C6
L		
PP1V5_S0_NB_VCCA_MPL	PP1V5_S0_NB_VCCA_MPLL - @m38a_lib.M38A	17C6 19C6
L		
PP1V5_S0_PGOOD	PP1V5_S0_PGOOD - @m38a_lib.M38A	77D6 80B2
PP1V5_S0_SB_R	PP1V5_S0_SB_R - @m38a_lib.M38A	25A7
PP1V5_S0_SB_VCC1_5_B	PP1V5_S0_SB_VCC1_5_B - @m38a_lib.M38A	22C1 24D5 25B7
PP1V5_S0_SB_VCCDMIPL	PP1V5_S0_SB_VCCDMIPLL - @m38a_lib.M38A	24B5 25A6
L		
PP1V8R2V0_S0_GPU_VDD	PP1V8R2V0_S0_GPU_VDDRH0 - @m38a_lib.M38A	87A7
RH0		
PP1V8R2V0_S0_GPU_VDD	PP1V8R2V0_S0_GPU_VDDRH1 - @m38a_lib.M38A	87B3
RH1		
PP1V8R3V3_S0_GPU_VDD	PP1V8R3V3_S0_GPU_VDDR4_F - @m38a_lib.M38A	91B6
R4_F		
PP1V8R3V3_S0_GPU_VDD	PP1V8R3V3_S0_GPU_VDDR5_F - @m38a_lib.M38A	91B6
R5_F		
PP1V8_FB_A0_VDDA0	PP1V8_FB_A0_VDDA0 - @m38a_lib.M38A	89D7
PP1V8_FB_A0_VDDA1	PP1V8_FB_A0_VDDA1 - @m38a_lib.M38A	89D7
PP1V8_FB_A1_VDDA0	PP1V8_FB_A1_VDDA0 - @m38a_lib.M38A	89D4
PP1V8_FB_A1_VDDA1	PP1V8_FB_A1_VDDA1 - @m38a_lib.M38A	89D4
PP1V8_FB_B0_VDDA0	PP1V8_FB_B0_VDDA0 - @m38a_lib.M38A	90D7
PP1V8_FB_B0_VDDA1	PP1V8_FB_B0_VDDA1 - @m38a_lib.M38A	90D7
PP1V8_FB_B1_VDDA0	PP1V8_FB_B1_VDDA0 - @m38a_lib.M38A	90D4
PP1V8_FB_B1_VDDA1	PP1V8_FB_B1_VDDA1 - @m38a_lib.M38A	90D4
PP1V8_S3_PGOOD	PP1V8_S3_PGOOD - @m38a_lib.M38A	79B2
PP2V5_S0_PGOOD	PP2V5_S0_PGOOD - @m38a_lib.M38A	77C6 77D3
PP2V5_ENET_CTAP	PP2V5_ENET_CTAP - @m38a_lib.M38A	43D7
PP2V5_S0_GPU_A2VDD	PP2V5_S0_GPU_A2VDD - @m38a_lib.M38A	93B7
PP2V5_S0_GPU_AVDD	PP2V5_S0_GPU_AVDD - @m38a_lib.M38A	93C7
PP2V5_S0_GPU_LPVDD	PP2V5_S0_GPU_LPVDD - @m38a_lib.M38A	93B7
PP2V5_S0_GPU_LVDDR	PP2V5_S0_GPU_LVDDR - @m38a_lib.M38A	93B7

PP2V5_S0_GPU_PVDD_F	PP2V5_S0_GPU_PVDD_F - @m38a_lib.M38A	91A6
PP2V5_S0_GPU_TPVDD	PP2V5_S0_GPU_TPVDD - @m38a_lib.M38A	93C7
PP2V5_S0_GPU_TXVDDR	PP2V5_S0_GPU_TXVDDR - @m38a_lib.M38A	93C7
PP2V5_S0_GPU_VDD1DI	PP2V5_S0_GPU_VDD1DI - @m38a_lib.M38A	93C8
PP2V5_S0_GPU_VDD2DI	PP2V5_S0_GPU_VDD2DI - @m38a_lib.M38A	93B8
PP3V3R12V_LCD_CONN	PP3V3R12V_LCD_CONN - @m38a_lib.M38A	94A6 94A6 94A7 94C5
PP3V3_AUDIO_SPDIF_EM	PP3V3_AUDIO_SPDIF_EMI -	73B7
I	@m38a_lib.M38A	
PP3V3_AUDIO_SPDIF_JA	PP3V3_AUDIO_SPDIF_JACK -	73B5 73D8
CK	@m38a_lib.M38A	
PP3V3_AVCC_SMC	PP3V3_AVCC_SMC - @m38a_lib.M38A	58D3
PP3V3_AVREF_SMC	PP3V3_AVREF_SMC - @m38a_lib.M38A	58D2 59A3
PP3V3_FW_ESD	PP3V3_FW_ESD - @m38a_lib.M38A	46A5 46A6 46B5 46C5 46D5
PP3V3_FW_ESD_F	PP3V3_FW_ESD_F - @m38a_lib.M38A	46A7
PP3V3_INTERCON	PP3V3_INTERCON - @m38a_lib.M38A	72C7
PP3V3_LCD_SW	PP3V3_LCD_SW - @m38a_lib.M38A	94C6
PP3V3_S0_CK410_VDD48	PP3V3_S0_CK410_VDD48 - @m38a_lib.M38A	33D5
PP3V3_S0_CK410_VDDA	PP3V3_S0_CK410_VDDA - @m38a_lib.M38A	33C6
PP3V3_S0_CK410_VDD_C	PP3V3_S0_CK410_VDD_CPU_SRC -	33D6
PU_SRC	@m38a_lib.M38A	
PP3V3_S0_CK410_VDD_P	PP3V3_S0_CK410_VDD_PCI -	33D5
CI	@m38a_lib.M38A	
PP3V3_S0_CK410_VDD_R	PP3V3_S0_CK410_VDD_REF -	33C5
EF	@m38a_lib.M38A	
PP3V3_S0_IMVP6_3V3	PP3V3_S0_IMVP6_3V3 - @m38a_lib.M38A	75D6
PP3V3_S5_FW_VDDA	PP3V3_S5_FW_VDDA - @m38a_lib.M38A	44D5 45C6
PP3V3_S5_SB_RTC	PP3V3_S5_SB_RTC - @m38a_lib.M38A	5D2 21D6 24B3 25A3 26D7
PP3V3_SO_2V5REG_R	PP3V3_SO_2V5REG_R - @m38a_lib.M38A	77D3
PP3V3_TPM_3VSB	PP3V3_TPM_3VSB - @m38a_lib.M38A	59C5 67C4
PP4V5_AUDIO_ANALOG	PP4V5_AUDIO_ANALOG - @m38a_lib.M38A	68A2 68D2 74C4 74D8
PP5V_BNDI_LE340	PP5V_BNDI_LE340 - @m38a_lib.M38A	47D3
PP5V_S0_DDC	PP5V_S0_DDC - @m38a_lib.M38A	97D4
PP5V_S0_DDC_FUSE	PP5V_S0_DDC_FUSE - @m38a_lib.M38A	97D5
PP5V_S0_GPUVCORE_VCC	PP5V_S0_GPUVCORE_VCC - @m38a_lib.M38A	85D7 88D8
PP5V_S0_IMVP6_VDD	PP5V_S0_IMVP6_VDD - @m38a_lib.M38A	75D6
PP5V_S0_SB_V5REF	PP5V_S0_SB_V5REF - @m38a_lib.M38A	24D5 25D7
PP5V_S3_BNDI	PP5V_S3_BNDI - @m38a_lib.M38A	47B2 47D1
PP5V_S5_SB_V5REF_SUS	PP5V_S5_SB_V5REF_SUS - @m38a_lib.M38A	24D5 25C7
PP5V_USB2_PORT0	PP5V_USB2_PORT0 - @m38a_lib.M38A	47D6
PP5V_USB2_PORT0_F	PP5V_USB2_PORT0_F - @m38a_lib.M38A	47D4
PP5V_USB2_PORT1	PP5V_USB2_PORT1 - @m38a_lib.M38A	47C6
PP5V_USB2_PORT1_F	PP5V_USB2_PORT1_F - @m38a_lib.M38A	47C5
PP5V_USB2_PORT2	PP5V_USB2_PORT2 - @m38a_lib.M38A	47B6
PP5V_USB2_PORT2_F	PP5V_USB2_PORT2_F - @m38a_lib.M38A	47B4
PP12V_AUD_SPKRAMP_PL	PP12V_AUD_SPKRAMP_PLANE - @m38a_lib.M38A	72D5
ANE		
PP12V_L7502	PP12V_L7502 - @m38a_lib.M38A	76D7
PP12V_S5_CPU_REG	PP12V_S5_CPU_REG - @m38a_lib.M38A	75C3 75D4 75D7 76C8 76D6
PPFW_PORT0_VP	PPFW_PORT0_VP - @m38a_lib.M38A	46D2
	PPFW_PORT1_VP - @m38a_lib.M38A	46B2 46D1
	PPFW_PORTS_VP - @m38a_lib.M38A	46D3
PPFW_PORT0_VP_FL	PPFW_PORT0_VP_FL - @m38a_lib.M38A	46C2
PPFW_PORT1_VP_FL	PPFW_PORT1_VP_FL - @m38a_lib.M38A	46B2
PPVCORE_S0_GPU_MPVDD	PPVCORE_S0_GPU_MPVDD - @m38a_lib.M38A	91A6
PPVCORE_S0_GPU_VDDCI	PPVCORE_S0_GPU_VDDCI - @m38a_lib.M38A	86C7
PPVIN_S5_IMVP6_VIN	PPVIN_S5_IMVP6_VIN - @m38a_lib.M38A	75D6
PPV_3V3_AUDIO_CODEC	PPV_3V3_AUDIO_CODEC - @m38a_lib.M38A	68D6
Q4201_3	Q4201_3 - @m38a_lib.M38A	42D6
Q5950_1	Q5950_1 - @m38a_lib.M38A	60A7
R6000_1	R6000_1 - @m38a_lib.M38A	60A6
R6001_1	R6001_1 - @m38a_lib.M38A	60A6
R6002_1	R6002_1 - @m38a_lib.M38A	60A6
R6003_2	R6003_2 - @m38a_lib.M38A	60A5
R7504_1	R7504_1 - @m38a_lib.M38A	75A8 75C1
R7507_1	R7507_1 - @m38a_lib.M38A	75A6 75B1
R8599_2	R8599_2 - @m38a_lib.M38A	85C4
RSMRST_PWRGD	RSMRST_PWRGD - @m38a_lib.M38A	58D7 76D1
SATA_A_D2R_N	SATA_A_D2R_N - @m38a_lib.M38A	21B6 38A6
	TP_SATA_A_D2R_N - @m38a_lib.M38A	38A5
SATA_A_D2R_P	SATA_A_D2R_P - @m38a_lib.M38A	21B6 38A6
	TP_SATA_A_D2R_P - @m38a_lib.M38A	38A5
SATA_A_R2D_C_N	SATA_A_R2D_C_N - @m38a_lib.M38A	21B6 38A6
	TP_SATA_A_R2D_N - @m38a_lib.M38A	38A5
SATA_A_R2D_C_P	SATA_A_R2D_C_P - @m38a_lib.M38A	21B6 38A6
	TP_SATA_A_R2D_P - @m38a_lib.M38A	38A5
SATA_C_D2R_C_N	SATA_C_D2R_C_N - @m38a_lib.M38A	38B8
SATA_C_D2R_C_P	SATA_C_D2R_C_P - @m38a_lib.M38A	38B8
SATA_C_D2R_N	SATA_C_D2R_N - @m38a_lib.M38A	21B6 38B6
SATA_C_D2R_P	SATA_C_D2R_P - @m38a_lib.M38A	21B6 38B6
SATA_C_DET_L	SATA_C_DET_L - @m38a_lib.M38A	23D2 38B5
SATA_C_PWR_EN_L	SATA_C_PWR_EN_L - @m38a_lib.M38A	23A3 23B3
SATA_C_R2D_C_N	SATA_C_R2D_C_N - @m38a_lib.M38A	21B6 38B6
SATA_C_R2D_C_P	SATA_C_R2D_C_P - @m38a_lib.M38A	21B6 38B6
SATA_C_R2D_N	SATA_C_R2D_N - @m38a_lib.M38A	38B8
SATA_C_R2D_P	SATA_C_R2D_P - @m38a_lib.M38A	38B8
SATA_RBIAS_N	SATA_RBIAS_N - @m38a_lib.M38A	21B6 38C7
	SATA_RBIAS_P - @m38a_lib.M38A	21B6 38C7
	SATA_RBIAS - @m38a_lib.M38A	38C7
	SATA_RBI

SMC_WAKE_SCI_L	SMC_WAKE_SCI_L - @m38a_lib.M38A	23C1 58D5
SMC_XDP_TCK	SMC_XDP_TCK - @m38a_lib.M38A	58C7
SMC_XDP_TCK_3_3	SMC_XDP_TCK_3_3 - @m38a_lib.M38A	58B5 59A5
SMC_XDP_TDO_3_3_L	SMC_XDP_TDO_3_3_L - @m38a_lib.M38A	58B7 59A5
SMC_XDP_TMS_L	SMC_XDP_TMS_L - @m38a_lib.M38A	58C7
SMC_XDP_TRST_L	SMC_XDP_TRST_L - @m38a_lib.M38A	58C7
SMC_XTAL	SMC_XTAL - @m38a_lib.M38A	58C3 59B8
SMLINK<0>	SMLINK<0> - @m38a_lib.M38A	23D5
SMLINK<1>	SMLINK<1> - @m38a_lib.M38A	23D5
SMS_INT_L	SMS_INT_L - @m38a_lib.M38A	23C3 26C2 58B5
SMS_ONOFF_L	SMS_ONOFF_L - @m38a_lib.M38A	58A5 59B4
SMS_X_AXIS	SMS_X_AXIS - @m38a_lib.M38A	58B7 59B6
	NC_SMS_X_AXIS - @m38a_lib.M38A	59B5
SMS_Y_AXIS	SMS_Y_AXIS - @m38a_lib.M38A	58B7 59B6
	NC_SMS_Y_AXIS - @m38a_lib.M38A	59B5
SMS_Z_AXIS	SMS_Z_AXIS - @m38a_lib.M38A	58A7 59B6
	NC_SMS_Z_AXIS - @m38a_lib.M38A	59B5
SPARE_SRC3_N	SPARE_SRC3_N - @m38a_lib.M38A	34D2
SPARE_SRC3_P	SPARE_SRC3_P - @m38a_lib.M38A	34D2
SPARE_SRC7_N	SPARE_SRC7_N - @m38a_lib.M38A	34D2
SPARE_SRC7_P	SPARE_SRC7_P - @m38a_lib.M38A	34D2
SPI_ARB	SPI_ARB - @m38a_lib.M38A	22C6 58D5
SPI_CE_L	SPI_CE_L - @m38a_lib.M38A	22C6 58B5 63C7
SPI_HOLD_L	SPI_HOLD_L - @m38a_lib.M38A	63C4
SPI_SCLK	SPI_SCLK - @m38a_lib.M38A	22C6 58D5 63C7
SPI_SCLK_R	SPI_SCLK_R - @m38a_lib.M38A	63C4
SPI_SI	SPI_SI - @m38a_lib.M38A	22C6 58D5 63C1
SPI_SI_R	SPI_SI_R - @m38a_lib.M38A	63C3
SPI_SO	SPI_SO - @m38a_lib.M38A	22C6 58D5 63C1
SPI_SO_R	SPI_SO_R - @m38a_lib.M38A	63C3
SPI_WP_L	SPI_WP_L - @m38a_lib.M38A	63C4
SPKRAMP_MUTE	SPKRAMP_MUTE - @m38a_lib.M38A	72B5
SPKRAMP_SS	SPKRAMP_SS - @m38a_lib.M38A	72B4
SUS_CLK_SB	SUS_CLK_SB - @m38a_lib.M38A	23C3 59B5
	SMC_SUS_CLK - @m38a_lib.M38A	58C5 59B6
SV_SET_UP	SV_SET_UP - @m38a_lib.M38A	23B6 23C3 60C1
SW_RST_BTN_L	SW_RST_BTN_L - @m38a_lib.M38A	5D1 26C6
SW_RST_DEBNC	SW_RST_DEBNC - @m38a_lib.M38A	26C4
SYS_LED_BRT_D	SYS_LED_BRT_D - @m38a_lib.M38A	60B8
SYS_LED_C	SYS_LED_C - @m38a_lib.M38A	60A6
SYS_LED_CTL_B	SYS_LED_CTL_B - @m38a_lib.M38A	60B7
SYS_LED_CTL_C	SYS_LED_CTL_C - @m38a_lib.M38A	60B6
SYS_LED_CTL_D	SYS_LED_CTL_D - @m38a_lib.M38A	60A6
SYS_ONEWIRE	SYS_ONEWIRE - @m38a_lib.M38A	58B7 59B4
SYS_POWERFAIL_L	SYS_POWERFAIL_L - @m38a_lib.M38A	6D8 76D2
SYS_PWRUP_L	SYS_PWRUP_L - @m38a_lib.M38A	6C7
THERM_DX_N	THERM_DX_N - @m38a_lib.M38A	10B5 10C5
THERM_DX_P	THERM_DX_P - @m38a_lib.M38A	10B5 10C5
THRM_ALERT_L	THRM_ALERT_L - @m38a_lib.M38A	10D3
THRM_THM	THRM_THM - @m38a_lib.M38A	10C4
TMDS_CK_TERM	TMDS_CK_TERM - @m38a_lib.M38A	97C8
TMDS_CLK_N	TMDS_CLK_N - @m38a_lib.M38A	93C3 97C8
TMDS_CLK_P	TMDS_CLK_P - @m38a_lib.M38A	93C3 97C8
TMDS_CONN_CLKN	TMDS_CONN_CLKN - @m38a_lib.M38A	97C4 97C7
TMDS_CONN_CLKP	TMDS_CONN_CLKP - @m38a_lib.M38A	97C4 97C7
TMDS_CONN_DN<0>	TMDS_CONN_DN<0> - @m38a_lib.M38A	97C4 97D7
TMDS_CONN_DN<1>	TMDS_CONN_DN<1> - @m38a_lib.M38A	97C4 97D7
TMDS_CONN_DN<2>	TMDS_CONN_DN<2> - @m38a_lib.M38A	97C7 97D4
TMDS_CONN_DP<0>	TMDS_CONN_DP<0> - @m38a_lib.M38A	97C4 97D7
TMDS_CONN_DP<1>	TMDS_CONN_DP<1> - @m38a_lib.M38A	97C4 97D7
TMDS_CONN_DP<2>	TMDS_CONN_DP<2> - @m38a_lib.M38A	97C7 97D4
TMDS_DATA_N<0>	TMDS_DATA_N<0> - @m38a_lib.M38A	93C3 97D8
TMDS_DATA_N<1>	TMDS_DATA_N<1> - @m38a_lib.M38A	93C3 97D8
TMDS_DATA_N<2>	TMDS_DATA_N<2> - @m38a_lib.M38A	93C3 97C8
TMDS_DATA_N<3>	TMDS_DATA_N<3> - @m38a_lib.M38A	93C3 95D6
TMDS_DATA_N<4>	TMDS_DATA_N<4> - @m38a_lib.M38A	93C3 95D6
TMDS_DATA_N<5>	TMDS_DATA_N<5> - @m38a_lib.M38A	93C3 95D6
TMDS_DATA_P<0>	TMDS_DATA_P<0> - @m38a_lib.M38A	93C3 97D8
TMDS_DATA_P<1>	TMDS_DATA_P<1> - @m38a_lib.M38A	93C3 97C8
TMDS_DATA_P<2>	TMDS_DATA_P<2> - @m38a_lib.M38A	93C3 97C8
TMDS_DATA_P<3>	TMDS_DATA_P<3> - @m38a_lib.M38A	93C3 95D6
TMDS_DATA_P<4>	TMDS_DATA_P<4> - @m38a_lib.M38A	93C3 95D6
TMDS_DATA_P<5>	TMDS_DATA_P<5> - @m38a_lib.M38A	93C3 95D6
TPM_BADD	TPM_BADD - @m38a_lib.M38A	67C4
TPM_GPIO1	TPM_GPIO1 - @m38a_lib.M38A	59B5 67C6
TPM_GPIO2	TPM_GPIO2 - @m38a_lib.M38A	59B5 67C6
TPM_LRESET_L	TPM_LRESET_L - @m38a_lib.M38A	6B7 67B7
TPM_PP	TPM_PP - @m38a_lib.M38A	59A5 67C6
TPM_RST_L	TPM_RST_L - @m38a_lib.M38A	67B6
TPM_XTALI	TPM_XTALI - @m38a_lib.M38A	59B7 67C6
TPM_XTALO	TPM_XTALO - @m38a_lib.M38A	59B7 67C6
TP_ATI_ROMCS_L	TP_ATI_ROMCS_L - @m38a_lib.M38A	91A3
TP_AZ_DOCK_EN_L	TP_AZ_DOCK_EN_L - @m38a_lib.M38A	23C5
TP_AZ_DOCK_RST_L	TP_AZ_DOCK_RST_L - @m38a_lib.M38A	23C5
TP_CLK14P3M_SPARE	TP_CLK14P3M_SPARE - @m38a_lib.M38A	34C4
TP_CPU_A32_L	TP_CPU_A32_L - @m38a_lib.M38A	7C7
TP_CPU_A33_L	TP_CPU_A33_L - @m38a_lib.M38A	7B7
TP_CPU_A34_L	TP_CPU_A34_L - @m38a_lib.M38A	7B7
TP_CPU_A35_L	TP_CPU_A35_L - @m38a_lib.M38A	7B7
TP_CPU_A36_L	TP_CPU_A36_L - @m38a_lib.M38A	7B7
TP_CPU_A37_L	TP_CPU_A37_L - @m38a_lib.M38A	7B7
TP_CPU_A38_L	TP_CPU_A38_L - @m38a_lib.M38A	7B7
TP_CPU_A39_L	TP_CPU_A39_L - @m38a_lib.M38A	7B7
TP_CPU_APM0_L	TP_CPU_APM0_L - @m38a_lib.M38A	7B7
TP_CPU_APM1_L	TP_CPU_APM1_L - @m38a_lib.M38A	7B7
TP_CPU_CPUSLP_L	TP_CPU_CPUSLP_L - @m38a_lib.M38A	21C4
TP_CPU_EXTBREF	TP_CPU_EXTBREF - @m38a_lib.M38A	7B6
TP_CPU_HFPLL	TP_CPU_HFPLL - @m38a_lib.M38A	7B7
TP_CPU_SPARE0	TP_CPU_SPARE0 - @m38a_lib.M38A	7B6
TP_CPU_SPARE1	TP_CPU_SPARE1 - @m38a_lib.M38A	7B6
TP_CPU_SPARE2	TP_CPU_SPARE2 - @m38a_lib.M38A	7B6
TP_CPU_SPARE3	TP_CPU_SPARE3 - @m38a_lib.M38A	7B6
TP_CPU_SPARE4	TP_CPU_SPARE4 - @m38a_lib.M38A	7B6
TP_CPU_SPARE5	TP_CPU_SPARE5 - @m38a_lib.M38A	7B6
TP_CPU_SPARE6	TP_CPU_SPARE6 - @m38a_lib.M38A	7B6
TP_CPU_SPARE7	TP_CPU_SPARE7 - @m38a_lib.M38A	7B6
TP_FB_A_MA12	TP_FB_A_MA12 - @m38a_lib.M38A	87D5
TP_FB_A_ODT<0>	TP_FB_A_ODT<0> - @m38a_lib.M38A	87B5
TP_FB_A_ODT<1>	TP_FB_A_ODT<1> - @m38a_lib.M38A	87B5
TP_FB_B_MA12	TP_FB_B_MA12 - @m38a_lib.M38A	87D1
TP_FB_B_ODT<0>	TP_FB_B_ODT<0> - @m38a_lib.M38A	87B1
TP_FB_B_ODT<1>	TP_FB_B_ODT<1> - @m38a_lib.M38A	87B1
TP_FW_CNA	TP_FW_CNA - @m38a_lib.M38A	44B3
TP_FW_LKON	TP_FW_LKON - @m38a_lib.M38A	44B3
TP_FW_LPS	TP_FW_LPS - @m38a_lib.M38A	44B3
TP_FW_MPCIACT_L	TP_FW_MPCIACT_L - @m38a_lib.M38A	44B3
TP_FW_NANDTREE	TP_FW_NANDTREE - @m38a_lib.M38A	44B3
TP_FW_ROM_AD	TP_FW_ROM_AD - @m38a_lib.M38A	44B3
TP_FW_VAUX_PRES	TP_FW_VAUX_PRES - @m38a_lib.M38A	44B3
TP_LVDS_VBG	TP_LVDS_VBG - @m38a_lib.M38A	13D5
TP_MEM_A_A<14>	TP_MEM_A_A<14> - @m38a_lib.M38A	28C3
TP_MEM_A_A<15>	TP_MEM_A_A<15> - @m38a_lib.M38A	28C3
TP_MEM_B_A<14>	TP_MEM_B_A<14> - @m38a_lib.M38A	5B4 29C3
TP_MEM_B_A<15>	TP_MEM_B_A<15> - @m38a_lib.M38A	5B4 29C3

TP_NB_TESTIN_L	TP_NB_TESTIN_L - @m38a_lib.M38A	14D6
TP_NB_XOR_FSB2_H7	TP_NB_XOR_FSB2_H7 - @m38a_lib.M38A	14D6
TP_NB_XOR_LVDS_A34	TP_NB_XOR_LVDS_A34 - @m38a_lib.M38A	14C6
TP_NB_XOR_LVDS_A35	TP_NB_XOR_LVDS_A35 - @m38a_lib.M38A	14C6
TP_NB_XOR_LVDS_D27	TP_NB_XOR_LVDS_D27 - @m38a_lib.M38A	14C6
TP_NB_XOR_LVDS_D28	TP_NB_XOR_LVDS_D28 - @m38a_lib.M38A	14C6
TP_PCI_CLK_SPARE	TP_PCI_CLK_SPARE - @m38a_lib.M38A	5B4 34C4
TP_PCI_GNT0_L	TP_PCI_GNT0_L - @m38a_lib.M38A	22B6
TP_PCI_GNT2_L	TP_PCI_GNT2_L - @m38a_lib.M38A	22B6
TP_PCI_GNT3_L	TP_PCI_GNT3_L - @m38a_lib.M38A	22B6
TP_PCI_GNT4_L	TP_PCI_GNT4_L - @m38a_lib.M38A	22B6
TP_PCI_PME_L	TP_PCI_PME_L - @m38a_lib.M38A	22A6
TP_SB_ACZ_SDIN1	TP_SB_ACZ_SDIN1 - @m38a_lib.M38A	21C6
TP_SB_ACZ_SDIN2	TP_SB_ACZ_SDIN2 - @m38a_lib.M38A	21C6
TP_SB_DRQ0_L	TP_SB_DRQ0_L - @m38a_lib.M38A	21D4
TP_SB_GPIO6	TP_SB_GPIO6 - @m38a_lib.M38A	23C5
TP_SB_GPIO23	TP_SB_GPIO23 - @m38a_lib.M38A	21D5
TP_SB_GPIO25_DO_NOT_	TP_SB_GPIO25_DO_NOT_USE -	23C3
USE	@m38a_lib.M38A	
TP_SB_GPIO38	TP_SB_GPIO38 - @m38a_lib.M38A	23C3
TP_SB_RSVD9	TP_SB_RSVD9 - @m38a_lib.M38A	22A6
TP_SB_SATALED_L	TP_SB_SATALED_L - @m38a_lib.M38A	21C6
TP_SB_XOR_AD5	TP_SB_XOR_AD5 - @m38a_lib.M38A	22A7
TP_SB_XOR_AD9	TP_SB_XOR_AD9 - @m38a_lib.M38A	22A7
TP_SB_XOR_AE5	TP_SB_XOR_AE5 - @m38a_lib.M38A	22A7
TP_SB_XOR_AE9	TP_SB_XOR_AE9 - @m38a_lib.M38A	22A6
TP_SB_XOR_AG4	TP_SB_XOR_AG4 - @m38a_lib.M38A	22A7
TP_SB_XOR_AG8	TP_SB_XOR_AG8 - @m38a_lib.M38A	22A6
TP_SB_XOR_AH4	TP_SB_XOR_AH4 - @m38a_lib.M38A	22A7
TP_SB_XOR_AH8	TP_SB_XOR_AH8 - @m38a_lib.M38A	22A6
TP_SB_XOR_T5	TP_SB_XOR_T5 - @m38a_lib.M38A	21C6
TP_SB_XOR_U3	TP_SB_XOR_U3 - @m38a_lib.M38A	21C6
TP_SB_XOR_U5	TP_SB_XOR_U5 - @m38a_lib.M38A	21C6
TP_SB_XOR_U7	TP_SB_XOR_U7 - @m38a_lib.M38A	21C6
TP_SB_XOR_V3	TP_SB_XOR_V3 - @m38a_lib.M38A	21C6
TP_SB_XOR_V4	TP_SB_XOR_V4 - @m38a_lib.M38A	21C6
TP_SB_XOR_V6	TP_SB_XOR_V6 - @m38a_lib.M38A	21C6
TP_SB_XOR_V7	TP_SB_XOR_V7 - @m38a_lib.M38A	21C6
TP_SB_XOR_W1	TP_SB_XOR_W1 - @m38a_lib.M38A	21C6
TP_SB_XOR_W3	TP_SB_XOR_W3 - @m38a_lib.M38A	21C6
TP_SB_XOR_Y1	TP_SB_XOR_Y1 - @m38a_lib.M38A	21C6
TP_SB_XOR_Y2	TP_SB_XOR_Y2 - @m38a_lib.M38A	21C6
TP_U8400_AG14	TP_U8400_AG14 - @m38a_lib.M38A	91A5
TP_U8900_J2	TP_U8900_J2 - @m38a_lib.M38A	89A7
TP_U8900_J3	TP_U8900_J3 - @m38a_lib.M38A	89A7
TP_U8950_J2	TP_U8950_J2 - @m38a_lib.M38A	89A4
TP_U8950_J3	TP_U8950_J3 - @m38a_lib.M38A	89A4
TP_U9000_J2	TP_U9000_J2 - @m38a_lib.M38A	90A7
TP_U9000_J3	TP_U9000_J3 - @m38a_lib.M38A	90A7
TP_U9050_J2	TP_U9050_J2 - @m38a_lib.M38A	90A4
TP_U9050_J3	TP_U9050_J3 - @m38a_lib.M38A	90A4
TSENSE_GPU_DXP	TSENSE_GPU_DXP - @m38a_lib.M38A	61C5
TSENSE_NB_DXP	TSENSE_NB_DXP - @m38a_lib.M38A	61B5
TSENSE_NB_GPU_DXN	TSENSE_NB_GPU_DXN - @m38a_lib.M38A	61B5
TV_DACA_OUT	TV_DACA_OUT - @m38a_lib.M38A	13C5 19B1
	TV_DACB_OUT - @m38a_lib.M38A	13C5 19B1
	TV_DACC_OUT - @m38a_lib.M38A	13C5 19B1
	TV_IRTNA - @m38a_lib.M38A	13C5 19B1
	TV_IRTNB - @m38a_lib.M38A	13C5 19B1
	TV_IRTNC - @m38a_lib.M38A	13C5 19B1
	TV_IREF - @m38a_lib.M38A	13C5 19B1
	PP3V3_S0_NB_VCCA_TVBG -	17C6 19B1
	@m38a_lib.M38A	
	PP3V3_S0_NB_VCCA_TVDACC -	17C6 19B1
	@m38a_lib.M38A	
	PP3V3_S0_NB_VCCA_TVDACB -	17C6 19B1
	@m38a_lib.M38A	
	PP3V3_S0_NB_VCCA_TVDACA -	17C6 19B1
	@m38a_lib.M38A	
	PP1V5_S0_NB_VCCD_TVDAC -	17C6 19B1
	@m38a_lib.M38A	
	PP1V5_S0_NB_VCCD_QTVDAC -	17B6 19A1
	@m38a_lib.M38A	
	=PP1V5_S0_AIRPORT - @m38a_lib.M38A	6C4 53D3
	PP1V5_S0 - @m38a_lib.M38A	6C6 11A7 11B7 11B7 80C2
	=PP1V5_S0_SB - @m38a_lib.M38A	6C4 25A8 25C8
	=PP1V5_S0_SB_VCC1_5_A -	6C4 24A3 25C1
	@m38a_lib.M38A	
	=PP1V5_S0_SB_VCC1_5_A_USB_CORE -	6C4 24A3 25B1
	@m38a_lib.M38A	
	=PP1V5_S0_SB_VCCUSBPLL -	6C4 24A5 25B6
	@m38a_lib.M38A	
	=PP1V5_S0_SB_VCC1_5_A_ATX -	6C4 24A5 25C6
	@m38a_lib.M38A	
	=PP1V5_S0_SB_VCCSATAPLL -	6C4 24B5 25D6
	@m38a_lib.M38A	
	=PP1V5_S0_SB_VCC1_5_A_ARX -	6C4 24B5 25D6
	@m38a_lib.M38A	
	=PP1V5_S0_NB_3GPLL - @m38a_lib.M38A	6C4 19A6 19A6
	=PP1V5_S0_NB_PLL - @m38a_lib.M38A	6C4 19C8 19D7
	=PP1V5_S0_NB_VCCAUX -	6C4 6C4 16D1 17B6 19A7
	@m38a_lib.M38A	19D7
	=PP1V5_S0_NB_VCCD_HMPLL -	6C4 17C6 19D7
	@m38a_lib.M38A	
	=PP1V5_S0_NB_PCIE - @m38a_lib.M38A	6C4 13D2 19D7
	=PP1V5_S0_CPU - @m38a_lib.M38A	6C4 8B6 8C5
	TV_IRTNC - @m38a_lib.M38A	13C5 19B1
	TV_IRTNB - @m38a_lib.M38A	13C5 19B1
	TV_IRTNA - @m38a_lib.M38A	13C5 19B1
	TV_IREF - @m38a_lib.M38A	13C5 19B1
	TV_DACC_OUT - @m38a_lib.M38A	13C5 19B1
	TV_DACB_OUT - @m38a_lib.M38A	13C5 19B1
	PP3V3_S0_NB_VCCA_TVDACC -	17C6 19B1
	@m38a_lib.M38A	
	PP3V3_S0_NB_VCCA_TVDACB -	17C6 19B1
	@m38a_lib.M38A	
	PP3V3_S0_NB_VCCA_TVDACA -	17C6 19B1
	@m38a_lib.M38A	
	PP3V3_S0_NB_VCCA_TVBG -	17C6 19B1
	@m38a_lib.M38A	
	PP1V5_S0_NB_VCCD_TVDAC -	17C6 19B1
	@m38a_lib.M38A	
	PP1V5_S0_NB_VCCD_QTVDAC -	17B6 19A1
	@m38a_lib.M38A	
	PP1V5_S0 - @m38a_lib.M38A	6C6 11A7 11B7 11B7 80C2
	=PP1V5_S0_SB_VCCUSBPLL -	6C4 24A5 25B6
	@m38a_lib.M38A	
	=PP1V5_S0_SB_VCCSATAPLL -	6C4 24B5 25D6
	@m38a_lib.M38A	
	=PP1V5_S0_SB_VCC1_5_A_USB_CORE -	6C4 24A3 25B1
	@m38a_lib.M38A	
	=PP1V5_S0_SB_VCC1_5_A_ATX -	6C4 24A5 25C6
	@m38a_lib.M38A	
	=PP1V5_S0_SB_VCC1_5_A_ARX -	6C4 24B5 25D6

	@m38a_lib.M38A	
	=PP1V5_S0_SB_VCC1_5_A -	6C4 24A3 25C1
	@m38a_lib.M38A	
	=PP1V5_S0_SB - @m38a_lib.M38A	6C4 25A8 25C8
	=PP1V5_S0_NB_VCCD_HMPLL -	6C4 17C6 19D7
	@m38a_lib.M38A	
	=PP1V5_S0_NB_VCCAUX -	6C4 6C4 16D1 17B6 19A7
	@m38a_lib.M38A	19D7
	=PP1V5_S0_NB_TVDAC - @m38a_lib.M38A	6C4 19B2 19D7
	=PP1V5_S0_NB_PLL - @m38a_lib.M38A	6C4 19C8 19D7
	=PP1V5_S0_NB_PCIE - @m38a_lib.M38A	6C4 13D2 19D7
	=PP1V5_S0_NB_3GPLL - @m38a_lib.M38A	6C4 19A6 19A6
	=PP1V5_S0_NB - @m38a_lib.M38A	6C4 19B2 19D7
	=PP1V5_S0_CPU - @m38a_lib.M38A	6C4 8B6 8C5
	=PP1V5_S0_AIRPORT - @m38a_lib.M38A	6C4 53D3
U600_3	U600_3 - @m38a_lib.M38A	6C7
U600_6	U600_6 - @m38a_lib.M38A	6B7
U600_8	U600_8 - @m38a_lib.M38A	6B7
U600_11	U600_11 - @m38a_lib.M38A	6B7
U650_4	U650_4 - @m38a_lib.M38A	6A6
U2698_4	U2698_4 - @m38a_lib.M38A	26C4
U3100_VDDQ	U3100_VDDQ - @m38a_lib.M38A	31C5
U6100_VCC	U6100_VCC - @m38a_lib.M38A	61C4
U7400_CEXT	U7400_CEXT - @m38a_lib.M38A	74C4
U8595_1	U8595_1 - @m38a_lib.M38A	85D2
USB_A_N	USB_A_N - @m38a_lib.M38A	22C2 47D6
USB_A_OC_L	USB_A_OC_L - @m38a_lib.M38A	22C4 22D8 47B7
USB_A_P	USB_A_P - @m38a_lib.M38A	22C2 47C6
USB_B_N	USB_B_N - @m38a_lib.M38A	22C2 53B2
USB_B_OC_L	USB_B_OC_L - @m38a_lib.M38A	22C4 22D8
USB_B_P	USB_B_P - @m38a_lib.M38A	22C2 53B2
USB_CAMERA_N	USB_CAMERA_N - @m38a_lib.M38A	47B2
USB_CAMERA_P	USB_CAMERA_P - @m38a_lib.M38A	47B2
USB_C_N	USB_C_N - @m38a_lib.M38A	22C2 47B6
USB_C_OC_L	USB_C_OC_L - @m38a_lib.M38A	22C4 22D8 47B7
USB_C_P	USB_C_P - @m38a_lib.M38A	22C2 47B6
USB_D_N	USB_D_N - @m38a_lib.M38A	22C2 47B3
USB_D_OC_L	USB_D_OC_L - @m38a_lib.M38A	22C4 22D8
USB_D_P	USB_D_P - @m38a_lib.M38A	22C2 47B3
USB_E_N	USB_E_N - @m38a_lib.M38A	22C2 47A6
USB_E_OC_L	USB_E_OC_L - @m38a_lib.M38A	22C4 22D8 47B7
USB_E_P	USB_E_P - @m38a_lib.M38A	22C2 47A6
USB_F_N	USB_F_N - @m38a_lib.M38A	22C2
USB_F_P	USB_F_P - @m38a_lib.M38A	22C2
USB_G_N	USB_G_N - @m38a_lib.M38A	22C2 47A3
	USB_BT_N - @m38a_lib.M38A	47A2
USB_G_P	USB_G_P - @m38a_lib.M38A	22C2 47A3
	USB_BT_P - @m38a_lib.M38A	47A2
USB_H_N	USB_H_N - @m38a_lib.M38A	22C2 47C3
USB_H_P	USB_H_P - @m38a_lib.M38A	22C2 47C3
USB_IR_N	USB_IR_N - @m38a_lib.M38A	47C2
USB_IR_P	USB_IR_P - @m38a_lib.M38A	47C2
USB_PORT0_N	USB_PORT0_N - @m38a_lib.M38A	47D5
USB_PORT0_P	USB_PORT0_P - @m38a_lib.M38A	47C5
USB_PORT1_N	USB_PORT1_N - @m38a_lib.M38A	47B5
USB_PORT1_P	USB_PORT1_P - @m38a_lib.M38A	47B5
USB_PORT2_N	USB_PORT2_N - @m38a_lib.M38A	47A5
USB_PORT2_P	USB_PORT2_P - @m38a_lib.M38A	47A5
USB_RBIAS_PN	USB_RBIAS_PN - @m38a_lib.M38A	22C2
VGA_B	VGA_B - @m38a_lib.M38A	97B6 97C5
VGA_G	VGA_G - @m38a_lib.M38A	97A6 97C5
VGA_HSYNC	VGA_HSYNC - @m38a_lib.M38A	97A3 97C5
VGA_R	VGA_R - @m38a_lib.M38A	97A6 97C5
VGA_VSYNC	VGA_VSYNC - @m38a_lib.M38A	97B3 97C5
VMAIN_AVLBL	VMAIN_AVLBL - @m38a_lib.M38A	41C7
VREG_FB	VREG_FB - @m38a_lib.M38A	68A3
VR_PWRGD_CK410	VR_PWRGD_CK410 - @m38a_lib.M38A	23C5 26A8
VR_PWRGOOD_DELAY	VR_PWRGOOD_DELAY - @m38a_lib.M38A	5C7 14B6 26D5 75C6
XDP_BPM_L<0>	XDP_BPM_L<0> - @m38a_lib.M38A	7C6 11B3
XDP_BPM_L<1>	XDP_BPM_L<1> - @m38a_lib.M38A	7C6 11B3
XDP_BPM_L<2>	XDP_BPM_L<2> - @m38a_lib.M38A	7C6 11B3
XDP_BPM_L<3>	XDP_BPM_L<3> - @m38a_lib.M38A	7C6 11B3
XDP_BPM_L<4>	XDP_BPM_L<4> - @m38a_lib.M38A	7C6 11B3
XDP_BPM_L<5>	XDP_BPM_L<5> - @m38a_lib.M38A	7C6 11B1 11B3
XDP_DBRESET_L	XDP_DBRESET_L - @m38a_lib.M38A	7C6 11B4 26B5
XDP_TCK	XDP_TCK - @m38a_lib.M38A	5D1 7A8 7C6 11B3 11B3
XDP_TDI	XDP_TDI - @m38a_lib.M38A	5D1 7B8 7C6 11B3
XDP_TDO	XDP_TDO - @m38a_lib.M38A	5D1 7C6 11B5
XDP_TMS	XDP_TMS - @m38a_lib.M38A	5D1 7B8 7C6 11B3
XDP_TRST_L	XDP_TRST_L - @m38a_lib.M38A	5D1 7C6 11B3
ZH701P1	ZH701P1 - @m38a_lib.M38A	6A3
ZH702P1	ZH702P1 - @m38a_lib.M38A	6A3
ZH703P1	ZH703P1 - @m38a_lib.M38A	6A3
ZH704P1	ZH704P1 - @m38a_lib.M38A	6B3

Title: Cref Part Report
Design: m38a
Date: Jun 21 19:41:15 2006

C85A0	CAP_402	m38a[85D1]
C600	CAP_402	m38a[6C7]
C601	CAP_402	m38a[6A3]
C602	CAP_402	m38a[6A3]
C603	CAP_402	m38a[6A3]
C604	CAP_402	m38a[6A4]
C610	CAP_402	m38a[6C7]
C650	CAP_402	m38a[6A7]
C699	CAP_P_CASE-C1	m38a[6D7]
C0800	CAP_402	m38a[8B5]
C0801	CAP_603	m38a[8B5]
C900	CAP_805	m38a[9B6]
C901	CAP_805	m38a[9B6]
C902	CAP_805	m38a[9A6]
C903	CAP_805	m38a[9A6]
C904	CAP_805	m38a[9A6]
C905	CAP_805	m38a[9A6]
C906	CAP_805	m38a[9A6]
C907	CAP_805	m38a[9B5]
C908	CAP_805	m38a[9B7]
C909	CAP_805	m38a[9B5]
C910	CAP_805	m38a[9B7]
C911	CAP_805	m38a[9B7]
C912	CAP_805	m38a[9A7]
C913	CAP_805	m38a[9A7]
C914	CAP_805	m38a[9A7]
C915	CAP_805	m38a[9A7]
C916	CAP_805	m38a[9A7]
C917	CAP_805	m38a[9A7]
C918	CAP_805	m38a[9A7]
C919	CAP_805	m38a[9A7]
C920	CAP_805	m38a[9A5]
C921	CAP_805	m38a[9A7]
C922	CAP_805	m38a[9A7]
C923	CAP_805	m38a[9B7]
C924	CAP_805	m38a[9A7]
C925	CAP_805	m38a[9A7]
C926	CAP_402	m38a[9B7]
C928	CAP_805	m38a[9B6]
C929	CAP_805	m38a[9B5]
C930	CAP_805	m38a[9A6]
C931	CAP_805	m38a[9A5]
C932	CAP_805	m38a[9A6]
C934	CAP_402	m38a[9B7]
C935	CAP_402	m38a[9B7]
C936	CAP_402	m38a[9B7]
C937	CAP_402	m38a[9B6]
C938	CAP_402	m38a[9B6]
C939	CAP_805	m38a[9A5]
C940	CAP_P_CASE-C1	m38a[9C7]
C941	CAP_P_3P_D2T	m38a[9A7]
C942	CAP_P_3P_D2T	m38a[9A7]
C943	CAP_P_3P_D2T	m38a[9A7]
C944	CAP_P_3P_D2T	m38a[9A7]
C945	CAP_P_3P_D2T	m38a[9A6]
C946	CAP_P_3P_D2T	m38a[9A6]
C950	CAP_402	m38a[9D4]
C951	CAP_402	m38a[9D3]
C952	CAP_402	m38a[9D3]
C953	CAP_402	m38a[9D2]
C1000	CAP_402	m38a[10C6]
C1001	CAP_402	m38a[10D4]
C1100	CAP_402	m38a[11A3]
C1150	CAP_402	m38a[11D7]
C1151	CAP_402	m38a[11D7]
C1152	CAP_402	m38a[11D7]
C1153	CAP_402	m38a[11C7]
C1154	CAP_402	m38a[11C7]
C1155	CAP_402	m38a[11C7]
C1156	CAP_402	m38a[11B7]
C1157	CAP_402	m38a[11B7]
C1158	CAP_402	m38a[11B7]
C1159	CAP_402	m38a[11B7]
C1160	CAP_402	m38a[11A7]
C1199	CAP_402	m38a[11B2]
C1211	CAP_402	m38a[12C3]
C1226	CAP_402	m38a[12B6]
C1236	CAP_402	m38a[12A6]
C1610	CAP_402	m38a[16B5]
C1611	CAP_402	m38a[16B4]
C1612	CAP_402	m38a[16B4]
C1613	CAP_402	m38a[16B8]
C1614	CAP_402	m38a[16B8]
C1615	CAP_402	m38a[16B6]
C1620	CAP_805-1	m38a[16B5]
C1621	CAP_805-1	m38a[16B5]
C1711	CAP_402	m38a[17A3]
C1712	CAP_402	m38a[17A3]
C1713	CAP_402	m38a[17B3]
C1900	CAP_P_CASE-C1	m38a[19B5]
C1901	CAP_P_CASE-C1	m38a[19B5]
C1902	CAP_805-1	m38a[19B5]
C1903	CAP_805-1	m38a[19B4]
C1904	CAP_402	m38a[19B4]
C1905	CAP_402	m38a[19B4]
C1906	CAP_402	m38a[19B3]
C1907	CAP_402	m38a[19B3]
C1914	CAP_805-1	m38a[19A8]
C1915	CAP_402	m38a[19A7]
C1916	CAP_402	m38a[19A8]
C1918	CAP_402	m38a[19A7]
C1934	CAP_805	m38a[19C7]
C1935	CAP_402	m38a[19C7]
C1936	CAP_805	m38a[19C7]
C1937	CAP_402	m38a[19C7]
C1965	CAP_603	m38a[19B8]
C1966	CAP_603	m38a[19B7]
C1967	CAP_402	m38a[19B7]
C1968	CAP_P_CASE-C1	m38a[19B7]
C1970	CAP_P_SMB2	m38a[19A5]
C1971	CAP_805-1	m38a[19A4]
C1972	CAP_805-1	m38a[19A4]
C1975	CAP_805-1	m38a[19A4]
C1976	CAP_402	m38a[19A4]
C1981	CAP_603	m38a[19B6]
C1982	CAP_603	m38a[19B8]
C2500	CAP_P_SMB2	m38a[25B8]
C2501	CAP_402	m38a[25A6]
C2502	CAP_402	m38a[25D4]
C2503	CAP_402	m38a[25D8]
C2504	CAP_402	m38a[25C8]
C2505	CAP_402	m38a[25B7]
C2506	CAP_402	m38a[25B7]
C2507	CAP_402	m38a[25B7]
C2508	CAP_805-1	m38a[25A6]
C2509	CAP_402	m38a[25B8]
C2510	CAP_402	m38a[25C1]
C2511	CAP_402	m38a[25D6]
C2512	CAP_402	m38a[25B1]
C2513	CAP_402	m38a[25C6]
C2514	CAP_402	m38a[25C6]
C2515	CAP_402	m38a[25B6]
C2516	CAP_P_CASE-C2	m38a[25D3]
C2517	CAP_402	m38a[25D6]
C2518	CAP_402	m38a[25D4]
C2519	CAP_402	m38a[25D3]
C2520	CAP_402	m38a[25B6]
C2521	CAP_402	m38a[25C3]
C2522	CAP_402	m38a[25B3]
C2523	CAP_402	m38a[25B4]
C2524	CAP_603	m38a[25B3]
C2525	CAP_402	m38a[25B3]
C2526	CAP_402	m38a[25A4]
C2527	CAP_402	m38a[25A3]
C2528	CAP_402	m38a[25A3]
C2529	CAP_402	m38a[25A3]
C2530	CAP_402	m38a[25A3]
C2531	CAP_402	m38a[25D1]
C2532	CAP_402	m38a[25C1]
C2533	CAP_402	m38a[25C1]
C2534	CAP_402	m38a[25D1]
C2605	CAP_402	m38a[26C7]
C2607	CAP_402	m38a[26D5]
C2608	CAP_402	m38a[26D8]
C2609	CAP_402	m38a[26D8]
C2610	CAP_402	m38a[26C7]
C2611	CAP_402	m38a[26B7]
C2698	CAP_402	m38a[26C4]
C2699	CAP_402	m38a[26C5]
C2800	CAP_402	m38a[28D6]
C2801	CAP_603	m38a[28B2]
C2802	CAP_603	m38a[28B2]
C2803	CAP_603	m38a[28B1]
C2804	CAP_603	m38a[28B1]
C2810	CAP_402	m38a[28B2]
C2811	CAP_402	m38a[28B2]
C2812	CAP_402	m38a[28B1]
C2813	CAP_402	m38a[28B1]
C2814	CAP_402	m38a[28B2]
C2815	CAP_402	m38a[28B2]
C2816	CAP_402	m38a[28B1]
C2817	CAP_402	m38a[28B1]
C2818	CAP_402	m38a[28B2]
C2819	CAP_402	m38a[28B2]
C2820	CAP_402	m38a[28B1]
C2821	CAP_402	m38a[28B1]
C2850	CAP_603	m38a[28D6]
C2851	CAP_603	m38a[28A6]
C2852	CAP_402	m38a[28A6]
C2900	CAP_402	m38a[29D6]
C2908	CAP_402	m38a[29B2]
C2909	CAP_402	m38a[29B2]
C2910	CAP_402	m38a[29B1]
C2911	CAP_402	m38a[29B1]
C2912	CAP_402	m38a[29B2]
C2913	CAP_402	m38a[29B2]
C2914	CAP_402	m38a[29B1]
C2915	CAP_402	m38a[29B1]
C2916	CAP_402	m38a[29B2]
C2917	CAP_402	m38a[29B2]
C2918	CAP_402	m38a[29B1]
C2919	CAP_402	m38a[29B1]
C2920	CAP_402	m38a[29B2]
C2921	CAP_402	m38a[29B2]
C2922	CAP_402	m38a[29B1]
C2923	CAP_402	m38a[29B1]
C2950	CAP_603	m38a[29D6]
C2951	CAP_603	m38a[29A7]
C2952	CAP_402	m38a[29A6]
C3004	CAP_402	m38a[30B4]
C3005	CAP_402	m38a[30D4]
C3006	CAP_402	m38a[30B3]
C3007	CAP_402	m38a[30D3]
C3008	CAP_402	m38a[30A3]
C3009	CAP_402	m38a[30A4]
C3010	CAP_402	m38a[30D4]
C3011	CAP_402	m38a[30D3]
C3013	CAP_402	m38a[30A4]
C3014	CAP_402	m38a[30A4]
C3015	CAP_402	m38a[30A3]
C3030	CAP_402	m38a[30C4]
C3033	CAP_402	m38a[30C3]
C3035	CAP_402	m38a[30C3]
C3100	CAP_402	m38a[31C4]
C3101	CAP_805-1	m38a[31B6]
C3102	CAP_805-1	m38a[31B4]
C3105	CAP_P_SMC-LF	m38a[31B4]
C3109	CAP_603	m38a[31C5]
C3110	CAP_402	m38a[31B6]
C3301	CAP_402	m38a[33D6]
C3302	CAP_402	m38a[33D6]
C3303	CAP_402	m38a[33D6]
C3304	CAP_402	m38a[33D6]
C3305	CAP_402	m38a[33D4]
C3306	CAP_402	m38a[33D4]
C3307	CAP_402	m38a[33C4]
C3308	CAP_402	m38a[33D4]
C3309	CAP_805-1	m38a[33D4]
C3310	CAP_402	m38a[33D3]
C3311	CAP_402	m38a[33C6]
C3312	CAP_805-1	m38a[33C6]
C3314	CAP_402	m38a[33D8]
C3315	CAP_402	m38a[33D7]
C3316	CAP_805-1	m38a[33D7]
C3317	CAP_805-1	m38a[33D4]
C3389	CAP_402	m38a[33C7]
C3390	CAP_402	m38a[33C7]
C3800	CAP_402	m38a[38B7]
C3801	CAP_402	m38a[38B7]
C3802	CAP_402	m38a[38B7]
C3803	CAP_402	m38a[38B7]
C3804	CAP_402	m38a[38C3]
C3805	CAP_402	m38a[38C2]
C3806	CAP_805-2	m38a[38C1]
C4101	CAP_402	m38a[41D7]
C4102	CAP_402	m38a[41D6]
C4103	CAP_402	m38a[41D6]
C4104	CAP_402	m38a[41D6]
C4105	CAP_402	m38a[41D5]
C4106	CAP_402	m38a[41D2]
C4107	CAP_402	m38a[41D2]
C4110	CAP_402	m38a[41D4]
C4111	CAP_402	m38a[41D4]
C4112	CAP_402	m38a[41C4]
C4113	CAP_402	m38a[41C4]
C4115	CAP_402	m38a[41B5]
C4116	CAP_402	m38a[41B5]
C4117	CAP_402	m38a[41B2]
C4118	CAP_402	m38a[41B2]
C4126	CAP_402	m38a[41A8]
C4127	CAP_402	m38a[41A8]
C4128	CAP_402	m38a[41A8]
C4129	CAP_402	m38a[41A8]
C4130	CAP_402	m38a[41A7]
C4131	CAP_402	m38a[41A7]
C4132	CAP_402	m38a[41A7]
C4133	CAP_402	m38a[41A6]
C4134	CAP_402	m38a[41A6]
C4135	CAP_402	m38a[41A5]
C4136	CAP_402	m38a[41A5]
C4137	CAP_402	m38a[41A5]
C4138	CAP_402	m38a[41A4]
C4139	CAP_402	m38a[41A4]
C4140	CAP_402	m38a[41B3]
C4150	CAP_402	m38a[41D5]
C4200	CAP_1210	m38a[42D8]
C4201	CAP_402	m38a[42D7]
C4202	CAP_1210	m38a[42D7]
C4203	CAP_1206-1	m38a[42D6]
C4204	CAP_402	m38a[42D6]
C4205	CAP_1210	m38a[42C5]
C4206	CAP_402	m38a[42C5]
C4209	CAP_603	m38a[42B7]
C4210	CAP_402	m38a[42B6]
C4300	CAP_402	m38a[43D7]
C4301	CAP_402	m38a[43D6]
C4304	CAP_402	m38a[43C6]
C4305	CAP_402	m38a[43B6]
C4401	CAP_402	m38a[44D1]
C4402	CAP_402	m38a[44C1]
C4410	CAP_402	m38a[44D6]
C4412	CAP_402	m38a[44D1]
C4500	CAP_402	m38a[45D4]
C4501	CAP_402	m38a[45D3]
C4502	CAP_402	m38a[45D3]
C4503	CAP_805-1	m38a[45C6]
C4504	CAP_402	m38a[45C4]
C4505	CAP_402	m38a[45C5]
C4506	CAP_402	m38a[45C5]
C4507	CAP_402	m38a[45C5]
C4508	CAP_402	m38a[45D5]
C4509	CAP_402	m38a[45D5]
C4510	CAP_402	m38a[45D5]
C4515	CAP_805-1	m38a[45D6]
C4520	CAP_402	m38a[45D5]
C4521	CAP_402	m38a[45D4]
C4522	CAP_402	m38a[45D3]
C4523	CAP_402	m38a[45D3]
C4609	CAP_603-1	m38a[46D5]
C4610	CAP_402	m38a[46D4]
C4611	CAP_402	m38a[46D4]
C4612	CAP_402	m38a[46C4]
C4613	CAP_402	m38a[46C4]
C4615	CAP_603-1	m38a[46C2]
C4616	CAP_402	m38a[46B2]
C4620	CAP_402	m38a[46B4]
C4621	CAP_402	m38a[46B4]
C4622	CAP_402	m38a[46A4]
C4623	CAP_402	m38a[46A4]
C4625	CAP_603-1	m38a[46A2]
C4626	CAP_402	m38a[46A2]
C4650	CAP_402	m38a[46C7]
C4654	CAP_402	m38a[46B8]
C4660	CAP_402	m38a[46C7]
C4664	CAP_402	m38a[46B7]
C4700	CAP_805-1	m38a[47C8]
C4710	CAP_P_B2	m38a[47D6]
C4712	CAP_402	m38a[47D5]
C4713	CAP_402	m38a[47D4]
C4720	CAP_P_B2	m38a[47C6]
C4722	CAP_402	m38a[47C4]
C4723	CAP_402	m38a[47C4]
C4730	CAP_P_B2	m38a[47B5]
C4732	CAP_402	m38a[47A4]
C4733	CAP_402	m38a[47A4]
C4742	CAP_402	m38a[47D1]
C4743	CAP_402	m38a[47D1]
C4750	CAP_402	m38a[47B6]
C4751	CAP_402	m38a[47C6]
C4752	CAP_402	m38a[47D6]
C4796	CAP_402	m38a[47C7]
C4797	CAP_805-2	m38a[47D2]
C4798	CAP_402	m38a[47B2]
C4799	CAP_805-2	m38a[47B2]
C5300	CAP_402	m38a[53B7]
C5301	CAP_402	m38a[53B7]
C5304	CAP_402	m38a[53D5]
C5305	CAP_402	m38a[53D5]
C5306	CAP_402	m38a[53D4]
C5307	CAP_402	m38a[53C4]
C5308	CAP_402	m38a[53C5]
C5309	CAP_402	m38a[53C4]
C5310	CAP_402	m38a[53C4]
C5311	CAP_805-1	m38a[53C3]
C5312	CAP_805-1	m38a[53D4]
C5313	CAP_402	m38a[53C5]
C5314	CAP_805-1	m38a[53C4]
C5800	CAP_402	m38a[59B8]
C5801	CAP_402	m38a[59B8]
C5802	CAP_805	m38a[58D3]
C5803	CAP_402	m38a[58D2]
C5804	CAP_402	m38a[58D2]
C5805	CAP_402	m38a[58D2]
C5806	CAP_402	m38a[58D1]
C5807	CAP_402	m38a[58D2]
C5820	CAP_402	m38a[58C3]
C5900	CAP_402	m38a[59D8]
C5901	CAP_402	m38a[59D8]
C5902	CAP_402	m38a[59B7]
C5903	CAP_402	m38a[59A8]
C5919	CAP_402	m38a[59B4]
C5940	CAP_402	m38a[59A4]
C5941	CAP_402	m38a[59A3]
C5942	CAP_805-1	m38a[59A3]
C5943	CAP_402	m38a[59A5]
C5951	CAP_402	m38a[60B6]
C6000	CAP_402	m38a[60D4]
C6001	CAP_402	m38a[60D4]
C6002	CAP_402	m38a[60D4]
C6003	CAP_402	m38a[60D4]
C6100	CAP_402	m38a[61B5]
C6101	CAP_402	m38a[61B5]
C6301	CAP_402	m38a[63C2]
C6308	CAP_402	m38a[63C5]
C6309	CAP_402	m38a[63C6]
C6311	CAP_402	m38a[63C2]
C6312	CAP_402	m38a[63D3]
C6500	CAP_603	m38a[65D5]
C6501	CAP_805	m38a[65D5]
C6502	CAP_603	m38a[65B4]
C6503	CAP_805	m38a[65B5]
C6504	CAP_P_6.3X11-TH-LF1	m38a[65C4]
C6505	CAP_P_6.3X11-TH-LF1	m38a[65B3]
C6600	CAP_603	m38a[66D4]
C6601	CAP_805	m38a[66C5]
C6602	CAP_P_SM-LF	m38a[66C3]
C6650	CAP_402	m38a[66B5]
C6651	CAP_402	m38a[66A5]
C6652	CAP_402	m38a[66B3]
C6653	CAP_402	m38a[66A3]
C6654	CAP_402	m38a[66B4]
C6655	CAP_402	m38a[66B2]
C6700	CAP_402	m38a[67C4]
C6701	CAP_402	m38a[67C4]
C6702	CAP_402	m38a[67C3]
C6703	CAP_402	m38a[67C3]
C6704	CAP_402	m38a[59B7]
C6705	CAP_402	m38a[59B7]
C6800	CAP_603	m38a[68D6]
C6801	CAP_402	m38a[68D6]
C6802	CAP_P_6.3X5.5-SM	m38a[68D4]
C6803	CAP_P_6.3X5.5-SM	m38a[68D3]
C6804	CAP_P_SMA-LF	m38a[68B4]
C6805	CAP_805	m38a[68B3]
C6806	CAP_805	m38a[68B3]
C6807	CAP_P_SMA-LF	m38a[68B3]
C6810	CAP_P_SMA-LF	m38a[68B3]
C6812	CAP_402	m38a[68B4]
C6813	CAP_402	m38a[68B3]
C6821	CAP_402	m38a[68C6]
C6822	CAP_603	m38a[68A5]
C6823	CAP_402	m38a[68A4]
C6825	CAP_402	m38a[68A3]
C6826	CAP_603	m38a[68A2]
C6830	CAP_402	m38a[68D4]
C6833	CAP_402	m38a[68B3]
C6835	CAP_402	m38a[68D6]
C6836	CAP_402	m38a[68D3]
C7200	CAP_P_6.3X8-SM	m38a[72D5]
C7201	CAP_1210	m38a[72D5]
C7202	CAP_805	m38a[72D4]
C7203	CAP_1210	m38a[72D3]
C7204	CAP_805	m38a[72D6]
C7205	CAP_805	m38a[72C6]
C7206	CAP_805	m38a[72C6]
C7207	CAP_805	m38a[72C6]
C7208	CAP_603-1	m38a[72C4]
C7209	CAP_805	m38a[72B4]
C7210	CAP_402	m38a[72B3]
C7211	CAP_402	m38a[72B2]
C7212	CAP_402	m38a[72B2]
C7213	CAP_402	m38a[72B2]
C7214	CAP_603	m38a[72B5]
C7215	CAP_402	m38a[72C6]
C7216	CAP_402	m38a[72C6]
C7217	CAP_P_6.3X8-SM	m38a[72D6]
C7218	CAP_603	m38a[72D5]
C7219	CAP_603	m38a[72D4]
C7221	CAP_402	m38a[72B7]
C7223	CAP_1210	m38a[72D3]
C7317	CAP_402	m38a[73B4]
C7318	CAP_805-1	m38a[73B4]
C7326	CAP_402	m38a[73C7]
C7400	CAP_402	m38a[74B4]
C7401	CAP_402	m38a[74D5]
C7402	CAP_402	m38a[74A4]
C7403	CAP_P_6.3X5.5-SM	m38a[74B7]
C7404	CAP_P_6.3X5.5-SM	m38a[74B6]
C7405	CAP_P_SMA-LF	m38a[74C7]
C7406	CAP_P_SMA-LF	m38a[74C6]
C7407	CAP_402	m38a[74D8]
C7408	CAP_402	m38a[74D7]
C7415	CAP_402	m38a[74A8]
C7416	CAP_402	m38a[74A8]
C7417	CAP_402	m38a[74A8]
C7418	CAP_805	m38a[74A5]
C7419	CAP_603-1	m38a[74A4]
C7424	CAP_402	m38a[74C3]
C7435	CAP_P_6.3X8-SM	m38a[74A3]
C7500	CAP_402	m38a[75C4]
C7501	CAP_P_TH-MCZ	m38a[75C2]
C7502	CAP_402	m38a[75B4]
C7503	CAP_402	m38a[75C1]
C7504	CAP_402	m38a[75B1]
C7505	CAP_402	m38a[75C8]
C7506	CAP_402	m38a[75B7]
C7507	CAP_402	m38a[75B7]
C7508	CAP_1210	m38a[75C2]
C7509	CAP_1210	m38a[75D1]
C7510	CAP_402	m38a[75C8]
C7511	CAP_603	m38a[75B2]
C7512	CAP_603	m38a[75C2]
C7513	CAP_402	m38a[75B7]
C7514	CAP_402	m38a[75B8]
C7515	CAP_603	m38a[75C4]
C7516	CAP_402	m38a[75B4]
C7517	CAP_P_SM-3	m38a[75D2]
C7518	CAP_P_SM-3	m38a[75D2]
C7521	CAP_402	m38a[75A6]
C7526	CAP_603	m38a[75D6]
C7527	CAP_603	m38a[75C5]

C7528	CAP_402	m38a[75B5]
C7529	CAP_402	m38a[75B5]
C7530	CAP_402	m38a[75D6]
C7531	CAP_402	m38a[75B5]
C7532	CAP_402	m38a[75B6]
C7533	CAP_402	m38a[75B6]
C7534	CAP_402	m38a[75B5]
C7535	CAP_603	m38a[75D5]
C7550	CAP_603	m38a[75D1]
C7551	CAP_603	m38a[75D1]
C7590	CAP_402	m38a[75C3]
C7592	CAP_402	m38a[75B3]
C7596	CAP_402	m38a[75D6]
C7597	CAP_1210	m38a[75D1]
C7598	CAP_1210	m38a[75D1]
C7599	CAP_402	m38a[76D6]
C7612	CAP_402	m38a[76B2]
C7633	CAP_402	m38a[76C7]
C7700	CAP_603	m38a[77D2]
C7703	CAP_402	m38a[77C2]
C7704	CAP_402	m38a[77C2]
C7706	CAP_402	m38a[77D2]
C7709	CAP_805	m38a[77D1]
C7710	CAP_402	m38a[77D5]
C7711	CAP_402	m38a[77D5]
C7712	CAP_402	m38a[77D4]
C7750	CAP_402	m38a[77A4]
C7751	CAP_805	m38a[77B5]
C7752	CAP_805	m38a[77B5]
C7753	CAP_402	m38a[77B6]
C7754	CAP_402	m38a[77B6]
C7755	CAP_805	m38a[77B4]
C7756	CAP_805	m38a[77B3]
C7757	CAP_402	m38a[77A7]
C7797	CAP_402	m38a[77B4]
C7798	CAP_603	m38a[77B7]
C7799	CAP_402	m38a[77A3]
C7800	CAP_1210	m38a[78C3]
C7801	CAP_P_SM-LF	m38a[78C4]
C7802	CAP_603	m38a[78C6]
C7803	CAP_603	m38a[78B6]
C7804	CAP_402	m38a[78C6]
C7805	CAP_603	m38a[78C4]
C7806	CAP_805-1	m38a[78B2]
C7807	CAP_P_CASE-D2E-LF	m38a[78B3]
C7809	CAP_402	m38a[78B3]
C7810	CAP_402	m38a[78B4]
C7811	CAP_402	m38a[78B5]
C7813	CAP_1206	m38a[78B4]
C7814	CAP_402	m38a[78B5]
C7817	CAP_P_CASE-D2E-LF	m38a[78B2]
C7900	CAP_402	m38a[79D6]
C7901	CAP_603	m38a[79D5]
C7902	CAP_402	m38a[79C5]
C7903	CAP_603	m38a[79C7]
C7906	CAP_402	m38a[79C5]
C7907	CAP_402	m38a[79C3]
C7908	CAP_402	m38a[79C5]
C7909	CAP_1206	m38a[79C4]
C7910	CAP_P_SM-3	m38a[79D4]
C7911	CAP_1210	m38a[79D3]
C7912	CAP_P_CASE-D2E-LF	m38a[79C3]
C7913	CAP_1206	m38a[79C2]
C7980	CAP_402	m38a[79B3]
C7992	CAP_603	m38a[79D6]
C7998	CAP_P_CASE-D2E-LF	m38a[79C3]
C8000	CAP_1210	m38a[80D3]
C8001	CAP_P_CASE-D2E-LF	m38a[80C3]
C8002	CAP_603	m38a[80D6]
C8003	CAP_402	m38a[80C3]
C8004	CAP_1206	m38a[80C4]
C8005	CAP_402	m38a[80C4]
C8006	CAP_402	m38a[80D6]
C8009	CAP_603	m38a[80C6]
C8010	CAP_603	m38a[80C4]
C8011	CAP_402	m38a[80C5]
C8012	CAP_402	m38a[80C5]
C8014	CAP_P_TH-MCZ	m38a[80D4]
C8015	CAP_1210	m38a[80D3]
C8016	CAP_805-1	m38a[80C2]
C8099	CAP_P_CASE-D2E-LF	m38a[80C2]
C8100	CAP_402	m38a[81D6]
C8101	CAP_603	m38a[81C5]
C8102	CAP_402	m38a[81C5]
C8103	CAP_603	m38a[81C7]
C8106	CAP_402	m38a[81C5]
C8107	CAP_402	m38a[81C3]
C8108	CAP_402	m38a[81C5]
C8109	CAP_1206	m38a[81C4]
C8110	CAP_1210	m38a[81D4]
C8111	CAP_1210	m38a[81D3]
C8112	CAP_1210	m38a[81D3]
C8114	CAP_P_CASE-D2E-LF	m38a[81C3]
C8115	CAP_805-1	m38a[81C2]
C8190	CAP_P_CASE-D2E-LF	m38a[81C3]
C8192	CAP_603	m38a[81D6]
C8198	CAP_1210	m38a[81D3]
C8199	CAP_402	m38a[81A5]
C8398	CAP_603	m38a[83B4]
C8399	CAP_603	m38a[83C4]
C8400	CAP_805	m38a[84C7]
C8401	CAP_402	m38a[84C7]
C8402	CAP_402	m38a[84C7]
C8405	CAP_805	m38a[84B7]
C8406	CAP_402	m38a[84B7]
C8407	CAP_402	m38a[84B7]
C8410	CAP_805	m38a[84B6]
C8411	CAP_402	m38a[84B7]
C8412	CAP_402	m38a[84B7]
C8413	CAP_402	m38a[84B7]
C8420	CAP_402	m38a[84D5]
C8421	CAP_402	m38a[84D5]
C8422	CAP_402	m38a[84D5]
C8423	CAP_402	m38a[84D5]
C8424	CAP_402	m38a[84D5]
C8425	CAP_402	m38a[84D5]
C8426	CAP_402	m38a[84D5]
C8427	CAP_402	m38a[84D5]
C8428	CAP_402	m38a[84D5]
C8429	CAP_402	m38a[84C5]
C8430	CAP_402	m38a[84C5]
C8431	CAP_402	m38a[84C5]
C8432	CAP_402	m38a[84C5]
C8433	CAP_402	m38a[84C5]

C8434	CAP_402	m38a[84C5]
C8435	CAP_402	m38a[84C5]
C8436	CAP_402	m38a[84C5]
C8437	CAP_402	m38a[84C5]
C8438	CAP_402	m38a[84C5]
C8439	CAP_402	m38a[84C5]
C8440	CAP_402	m38a[84B5]
C8441	CAP_402	m38a[84B5]
C8442	CAP_402	m38a[84B5]
C8443	CAP_402	m38a[84B5]
C8444	CAP_402	m38a[84B5]
C8445	CAP_402	m38a[84B5]
C8446	CAP_402	m38a[84B5]
C8447	CAP_402	m38a[84B5]
C8448	CAP_402	m38a[84B5]
C8449	CAP_402	m38a[84B5]
C8450	CAP_402	m38a[84B5]
C8451	CAP_402	m38a[84B5]
C8455	CAP_402	m38a[84D2]
C8456	CAP_402	m38a[84D2]
C8457	CAP_402	m38a[84D2]
C8458	CAP_402	m38a[84D2]
C8459	CAP_402	m38a[84D2]
C8460	CAP_402	m38a[84D2]
C8461	CAP_402	m38a[84D2]
C8462	CAP_402	m38a[84D2]
C8463	CAP_402	m38a[84D2]
C8464	CAP_402	m38a[84C2]
C8465	CAP_402	m38a[84C2]
C8466	CAP_402	m38a[84C2]
C8467	CAP_402	m38a[84C2]
C8468	CAP_402	m38a[84C2]
C8469	CAP_402	m38a[84C2]
C8470	CAP_402	m38a[84C2]
C8471	CAP_402	m38a[84C2]
C8472	CAP_402	m38a[84C2]
C8473	CAP_402	m38a[84C2]
C8474	CAP_402	m38a[84C2]
C8475	CAP_402	m38a[84B2]
C8476	CAP_402	m38a[84B2]
C8477	CAP_402	m38a[84B2]
C8478	CAP_402	m38a[84B2]
C8479	CAP_402	m38a[84B2]
C8480	CAP_402	m38a[84B2]
C8481	CAP_402	m38a[84B2]
C8482	CAP_402	m38a[84B2]
C8483	CAP_402	m38a[84B2]
C8484	CAP_402	m38a[84B2]
C8485	CAP_402	m38a[84B2]
C8486	CAP_402	m38a[84B2]
C8500	CAP_603	m38a[85D6]
C8501	CAP_603	m38a[85D6]
C8502	CAP_603	m38a[85D6]
C8506	CAP_402	m38a[85C8]
C8507	CAP_402	m38a[85C7]
C8508	CAP_402	m38a[85C7]
C8509	CAP_402	m38a[85C5]
C8521	CAP_402	m38a[85C4]
C8522	CAP_402	m38a[85C5]
C8530	CAP_1210	m38a[85D4]
C8531	CAP_1210	m38a[85D4]
C8532	CAP_1210	m38a[85D4]
C8540	CAP_805	m38a[85C2]
C8541	CAP_805	m38a[85C2]
C8542	CAP_P_CASE-D2E-LF	m38a[85C2]
C8543	CAP_P_CASE-D2E-LF	m38a[85C2]
C8590	CAP_402	m38a[85D3]
C8592	CAP_402	m38a[85C2]
C8595	CAP_402	m38a[85D1]
C8598	CAP_402	m38a[85D2]
C8599	CAP_1206	m38a[85C4]
C8600	CAP_805	m38a[86C7]
C8601	CAP_805	m38a[86C7]
C8604	CAP_402	m38a[86C7]
C8605	CAP_402	m38a[86C6]
C8606	CAP_402	m38a[86C6]
C8607	CAP_402	m38a[86C6]
C8608	CAP_402	m38a[86C5]
C8609	CAP_402	m38a[86C5]
C8610	CAP_402	m38a[86C5]
C8611	CAP_402	m38a[86C7]
C8612	CAP_402	m38a[86C6]
C8613	CAP_402	m38a[86C6]
C8614	CAP_402	m38a[86C6]
C8615	CAP_402	m38a[86C5]
C8616	CAP_402	m38a[86C5]
C8630	CAP_805	m38a[86C6]
C8631	CAP_402	m38a[86C6]
C8632	CAP_402	m38a[86C5]
C8633	CAP_402	m38a[86C5]
C8634	CAP_402	m38a[86C5]
C8650	CAP_805	m38a[86B7]
C8651	CAP_805	m38a[86B7]
C8652	CAP_805	m38a[86B7]
C8653	CAP_805	m38a[86B6]
C8655	CAP_402	m38a[86B6]
C8656	CAP_402	m38a[86B6]
C8657	CAP_402	m38a[86B6]
C8658	CAP_402	m38a[86B5]
C8659	CAP_402	m38a[86B5]
C8660	CAP_402	m38a[86B5]
C8661	CAP_402	m38a[86B6]
C8662	CAP_402	m38a[86B6]
C8663	CAP_402	m38a[86B6]
C8664	CAP_402	m38a[86B5]
C8665	CAP_402	m38a[86B5]
C8666	CAP_402	m38a[86B5]
C8667	CAP_402	m38a[86B6]
C8668	CAP_402	m38a[86B6]
C8669	CAP_402	m38a[86B6]
C8670	CAP_402	m38a[86B5]
C8671	CAP_402	m38a[86B5]
C8672	CAP_402	m38a[86B5]
C8673	CAP_402	m38a[86B6]
C8674	CAP_402	m38a[86B6]
C8675	CAP_402	m38a[86B6]
C8676	CAP_402	m38a[86B5]
C8677	CAP_402	m38a[86B5]
C8678	CAP_402	m38a[86B5]
C8679	CAP_402	m38a[86A6]
C8680	CAP_402	m38a[86A6]
C8681	CAP_402	m38a[86A6]
C8682	CAP_402	m38a[86A5]
C8683	CAP_402	m38a[86A5]

C8690	CAP_805	m38a[86D5]
C8691	CAP_402	m38a[86D5]
C8692	CAP_402	m38a[86D5]
C8711	CAP_402	m38a[87B7]
C8713	CAP_402	m38a[87B7]
C8715	CAP_402	m38a[87A7]
C8716	CAP_402	m38a[87A6]
C8721	CAP_402	m38a[87B4]
C8723	CAP_402	m38a[87B4]
C8725	CAP_402	m38a[87A4]
C8726	CAP_402	m38a[87A3]
C8900	CAP_805	m38a[89D7]
C8901	CAP_402	m38a[89D7]
C8902	CAP_402	m38a[89D7]
C8903	CAP_402	m38a[89D7]
C8904	CAP_402	m38a[89D6]
C8910	CAP_402	m38a[89D7]
C8915	CAP_402	m38a[89D6]
C8920	CAP_805	m38a[89C8]
C8921	CAP_402	m38a[89C8]
C8922	CAP_402	m38a[89C7]
C8923	CAP_402	m38a[89C7]
C8924	CAP_402	m38a[89C7]
C8925	CAP_402	m38a[89C7]
C8926	CAP_402	m38a[89C6]
C8931	CAP_402	m38a[89C7]
C8933	CAP_402	m38a[89C6]
C8950	CAP_805	m38a[89D4]
C8951	CAP_402	m38a[89D4]
C8952	CAP_402	m38a[89D4]
C8953	CAP_402	m38a[89D3]
C8954	CAP_402	m38a[89D3]
C8960	CAP_402	m38a[89D3]
C8965	CAP_402	m38a[89D3]
C8970	CAP_805	m38a[89C5]
C8971	CAP_402	m38a[89C4]
C8972	CAP_402	m38a[89C4]
C8973	CAP_402	m38a[89C4]
C8974	CAP_402	m38a[89C4]
C8975	CAP_402	m38a[89C3]
C8976	CAP_402	m38a[89C3]
C8981	CAP_402	m38a[89C3]
C8983	CAP_402	m38a[89C3]
C9000	CAP_805	m38a[90D7]
C9001	CAP_402	m38a[90D7]
C9002	CAP_402	m38a[90D7]
C9003	CAP_402	m38a[90D7]
C9004	CAP_402	m38a[90D6]
C9010	CAP_402	m38a[90D7]
C9015	CAP_402	m38a[90D6]
C9020	CAP_805	m38a[90C8]
C9021	CAP_402	m38a[90C8]
C9022	CAP_402	m38a[90C7]
C9023	CAP_402	m38a[90C7]
C9024	CAP_402	m38a[90C7]
C9025	CAP_402	m38a[90C7]
C9026	CAP_402	m38a[90C6]
C9031	CAP_402	m38a[90C7]
C9033	CAP_402	m38a[90C6]
C9050	CAP_805	m38a[90D4]
C9051	CAP_402	m38a[90D4]
C9052	CAP_402	m38a[90D4]
C9052	CAP_402	m38a[90D4]
C9053	CAP_402	m38a[90D3]
C9054	CAP_402	m38a[90D3]
C9060	CAP_402	m38a[90D3]
C9065	CAP_402	m38a[90D3]
C9070	CAP_805	m38a[90C5]
C9071	CAP_402	m38a[90C4]
C9072	CAP_402	m38a[90C4]
C9073	CAP_402	m38a[90C4]
C9074	CAP_402	m38a[90C4]
C9075	CAP_402	m38a[90C3]
C9076	CAP_402	m38a[90C3]
C9081	CAP_402	m38a[90C3]
C9083	CAP_402	m38a[90C3]
C9100	CAP_805	m38a[91C5]
C9101	CAP_402	m38a[91C5]
C9102	CAP_402	m38a[91C5]
C9103	CAP_402	m38a[91C5]
C9110	CAP_805	m38a[91C5]
C9111	CAP_402	m38a[91C5]
C9112	CAP_402	m38a[91C5]
C9115	CAP_805	m38a[91B5]
C9116	CAP_402	m38a[91B5]
C9117	CAP_402	m38a[91B5]
C9120	CAP_805	m38a[91B5]
C9121	CAP_402	m38a[91B5]
C9122	CAP_402	m38a[91B5]
C9125	CAP_805	m38a[91B5]
C9126	CAP_402	m38a[91B5]
C9127	CAP_402	m38a[91B5]
C9130	CAP_805	m38a[91A6]
C9131	CAP_402	m38a[91A6]
C9132	CAP_402	m38a[91A5]
C9135	CAP_805	m38a[91A6]
C9136	CAP_402	m38a[91A6]
C9137	CAP_402	m38a[91A5]
C9140	CAP_805	m38a[91A6]
C9141	CAP_402	m38a[91A6]
C9142	CAP_402	m38a[91A5]
C9191	CAP_402	m38a[91D2]
C9300	CAP_805	m38a[93C6]
C9301	CAP_402	m38a[93C6]
C9302	CAP_402	m38a[93C5]
C9305	CAP_805	m38a[93C6]
C9306	CAP_402	m38a[93C6]
C9307	CAP_402	m38a[93C5]
C9310	CAP_805	m38a[93C6]
C9311	CAP_402	m38a[93C6]
C9312	CAP_402	m38a[93C5]
C9315	CAP_805	m38a[93B8]
C9316	CAP_402	m38a[93B8]
C9317	CAP_402	m38a[93B7]
C9320	CAP_805	m38a[93B6]
C9321	CAP_402	m38a[93B6]
C9322	CAP_402	m38a[93B5]
C9325	CAP_805	m38a[93B8]
C9326	CAP_402	m38a[93B8]
C9327	CAP_402	m38a[93B7]
C9330	CAP_805	m38a[93B6]
C9331	CAP_402	m38a[93B6]
C9332	CAP_402	m38a[93B5]
C9340	CAP_805	m38a[93A6]
C9341	CAP_402	m38a[93A6]

C9342	CAP_402	m38a[93A5]
C9345	CAP_805	m38a[93A6]
C9346	CAP_402	m38a[93A5]
C9347	CAP_402	m38a[93A5]
C9400	CAP_603-1	m38a[94C7]
C9401	CAP_402	m38a[94C6]
C9410	CAP_402	m38a[94C6]
C9420	CAP_1210	m38a[94C5]
C9450	CAP_805	m38a[94C2]
C9470	CAP_402	m38a[94B2]
C9700	CAP_402	m38a[97C8]
C9710	CAP_603	m38a[97C3]
C9711	CAP_402	m38a[97D3]
C9713	CAP_402	m38a[97C2]
C9714	CAP_402	m38a[97C2]
C9740	CAP_402	m38a[97A7]
C9741	CAP_402	m38a[97A6]
C9742	CAP_402	m38a[97A6]
C9750	CAP_402	m38a[97B4]
C9751	CAP_402	m38a[97A4]
D2500	DIODE_SCHOT_SOT23	m38a[25C8]
D2501	DIODE_SCHOT_SOT23	m38a[25D8]
D2600	DIODE_SCHOT_SOT23	m38a[26D8]
D2601	DIODE_SCHOT_SOT23	m38a[26C8]
D4600	DIODE_SMC	m38a[46D5]
D4690	ZENER_SOT23	m38a[46A6]
D4700	DIODE_SCHOT_3P_A_SC-75	m38a[47C4]
D4701	DIODE_SCHOT_3P_A_SC-75	m38a[47B4]
D4702	DIODE_SCHOT_3P_A_SC-75	m38a[47A4]
D6500	DIODE_SOT23	m38a[65C4]
D6501	DIODE_SOT23	m38a[65B4]
D6502	DIODE_SCHOT_SMB	m38a[65C4]
D6503	DIODE_SCHOT_SMB	m38a[65B4]
D6600	DIODE_SOT23	m38a[66C4]
D6601	DIODE_SCHOT_SMB	m38a[66C3]
D7500	DIODE_SCHOT_SMB	m38a[75C3]
D7501	DIODE_SCHOT_SMB	m38a[75B2]
D7599	DIODE_SOT23	m38a[76D6]
D8520	DIODE_SCHOT_SMB	m38a[85C3]
D9700	ZENER_CASE425	m38a[97C1]
DP4610	DIODE_DUAL_6P_SOT-363	m38a[46D4 46D3]
DP4611	DIODE_DUAL_6P_SOT-363	m38a[46C4 46C3]
DP4620	DIODE_DUAL_6P_SOT-363	m38a[46B4 46B3]
DP4621	DIODE_DUAL_6P_SOT-363	m38a[46A4 46A3]
DZ4700	DIODE_SCHOT_POWERDI-123	m38a[47C8]
DZ6800	DIODE_SCHOT_POWERDI-123	m38a[68A4]
DZ7300	SUPPR_TRANSIENT1_402	m38a[73C6]
DZ7301	SUPPR_TRANSIENT1_402	m38a[73C5]
DZ7302	SUPPR_TRANSIENT1_402	m38a[73C6]
DZ7311	SUPPR_TRANSIENT1_402	m38a[73A7]
DZ7313	SUPPR_TRANSIENT1_402	m38a[73A6]
DZ7314	SUPPR_TRANSIENT1_402	m38a[73A6]
DZ7315	SUPPR_TRANSIENT1_402	m38a[73A6]
DZ7323	SUPPR_TRANSIENT1_402	m38a[73A5]
DZ7324	SUPPR_TRANSIENT1_402	m38a[73C5]
DZ7325	SUPPR_TRANSIENT1_402	m38a[73C3]
DZ7326	SUPPR_TRANSIENT1_402	m38a[73C3]
DZ7380	SUPPR_TRANSIENT1_402	m38a[73A7]
F4602	FUSE_MINISMD-LF	m38a[46D3]
F4701	FUSE_MINISMD-LF	m38a[47D3]
F9710	FUSE_SM-LF	m38a[97D5]
FL4610	FILTER_4P_2012	m38a[46C3]
FL4620	FILTER_4P_2012	m38a[46B3]
FL9740	FILTER_LC_SM-220MHZ-LF	m38a[97B7]
FL9741	FILTER_LC_SM-220MHZ-LF	m38a[97A7]
FL9742	FILTER_LC_SM-220MHZ-LF	m38a[97A7]
FLE011	FILTER_4P_2012	m38a[46C3]
FLE021	FILTER_4P_2012	m38a[46B3]
GV3801	HOLE_VIA	m38a[38A8]
GV3802	HOLE_VIA	m38a[38A7]
GV3803	HOLE_VIA	m38a[38A8]
GV3804	HOLE_VIA	m38a[38A7]
GV3805	HOLE_VIA	m38a[38A8]
GV3806	HOLE_VIA	m38a[38A7]
GV3807	HOLE_VIA	m38a[38A8]
GV3808	HOLE_VIA	m38a[38A7]
J3	CON_2RTSM_125_SM-2MT-BLK-LF	m38a[61B6]
J600	CON_M12RT_D_THA_M-RT-TH	m38a[6D7]
J0700	CPU_YONAH_SKT_BGA	m38a[7C3 7D7]
J0700	CPU_YONAH_SKT_BGA	m38a[8D4 8D8]
J1000	CON_2RTSM_125_SM-2MT-BLK-LF	m38a[10B7]
J1101	CON_F28RT_S2MT_SM_F-RT-SM	m38a[11C2]
J2600	BATTERY_2P_SM	m38a[26C8]
J2800	CON_F200RT_DDR2DIMM_5MT_SM_F-RT-SM1	m38a[28D5]
J2900	CON_F200RT_DDR2DIMM_5MT_SM_F-RT-SM1	m38a[29D5]
J2901	CON_F4ST_S2MT_SM_F-ST-SM	m38a[59C7]
J2903	CON_M2ST_S2MT_SM_M-ST-SM	m38a[59C8]
J4700	CON_F10ST_D_SMA_F-ST-SM	m38a[47B1]
J5300	CON_F52RT_D2MT_SM_F-RT-SM	m38a[53C5]
J6000	CON_F30STSM_5047_SM1	m38a[60C3]
J6500	CON_M4RT_S2MT_SM_M-RT-SM	m38a[65D3]
J6501	CON_M5RT_S2MT_SMA_M-RT-SM	m38a[65B2]
J6600	CON_F4ST_S2MT_SM_F-ST-SM	m38a[66C2]
J6601	CON_M4RT_S2MT_SM_M-RT-SM	m38a[66B5]
J6602	CON_M4RT_S2MT_SM_M-RT-SM	m38a[66B3]
J7300	CON_F9ANG_4MT_OPTAUD JCK_TH1_F-5.5-DEG-TH	m38a[73D8]

J7301	CON_M7RT_S2MT_SM_M-R-SM	m38a[73D1]
J7303	CON_F9ANG_S4MT_TH1_F-ANG-TH	m38a[73B3]
J9401	CON_M4ST_S_SM_M-ST-SM	m38a[94C2]
J9402	CON_F30ST_D_SM_F-ST-SM	m38a[94B6]
J9710	CON_DVI_F32ST_Q2MT_SM_F-ST-SM4	m38a[97D5]
JC900	CON_M7ST_SATA_SM_M-ST-SM	m38a[38B8]
JC901	CON_F50ST_D2MT_SM_F-ST-SM	m38a[38D2]
JD600	CON_RJ45_10ANG_S3MT_TH1_F-ANG-TH	m38a[43C6]
JE000	CON_F6ST_S4MT_TH1_F-ST-TH	m38a[46C2]
JE001	CON_F6ST_S4MT_TH1_F-ST-TH	m38a[46B2]
JE310	CON_F4ST_USB_S3MT_TH_F-ST-TH	m38a[47D4]
JE320	CON_F4ST_USB_S3MT_TH_F-ST-TH	m38a[47B4]
JE330	CON_F4ST_USB_S3MT_TH_F-ST-TH	m38a[47A4]
JE350	CON_M14RT_S2MT_SM_M-RT-SM	m38a[47C1]
L1934	IND_0603	m38a[19C7]
L1936	IND_0603	m38a[19C7]
L1970	IND_1210	m38a[19A5]
L1975	IND_0805	m38a[19A5]
L2500	IND_SM-3	m38a[25B8]
L2507	IND_1206	m38a[25A7]
L3301	IND_0402-LF	m38a[33D7]
L3302	IND_0402-LF	m38a[33D3]
L4200	IND_0805	m38a[42D7]
L4201	IND_0805	m38a[42B7]
L4300	IND_SM	m38a[43D7]
L4409	IND_0402	m38a[44D6]
L4610	IND_1206-LF	m38a[46D2]
L4620	IND_1206-LF	m38a[46B2]
L4690	IND_SM-1	m38a[46A6]
L4710	IND_SM	m38a[47D5]
L4712	FILTER_4P_2012	m38a[47C5]
L4720	IND_SM	m38a[47C5]
L4722	FILTER_4P_2012	m38a[47B5]
L4730	IND_SM	m38a[47B5]
L4732	FILTER_4P_2012	m38a[47A5]
L4740	IND_SM	m38a[47D2]
L4742	FILTER_4P_2012	m38a[47C2]
L4752	FILTER_4P_2012	m38a[47B2]
L6800	IND_0402-LF	m38a[68A5]
L6801	IND_0402-LF	m38a[68D6]
L7200	IND_SM-1	m38a[72D6]
L7201	IND_0603-LF	m38a[72C2]
L7202	IND_0603-LF	m38a[72C2]
L7203	IND_0603-LF	m38a[72C3]
L7204	IND_0603-LF	m38a[72C3]
L7205	IND_0603	m38a[72D6]
L7206	IND_0603	m38a[72C6]
L7207	IND_0603	m38a[72C6]
L7208	IND_0603	m38a[72C6]
L7300	IND_0603-LF	m38a[73D6]
L7301	IND_0603-LF	m38a[73D6]
L7302	IND_0603-LF	m38a[73D6]
L7303	IND_0603-LF	m38a[73D6]
L7304	IND_0603-LF	m38a[73D5]
L7305	IND_0603-LF	m38a[73D5]
L7306	IND_0603-LF	m38a[73D5]
L7307	IND_0603-LF	m38a[73D5]
L7309	IND_0603-LF	m38a[73C4]
L7310	IND_0603-LF	m38a[73C4]
L7312	IND_0603-LF	m38a[73C3]
L7313	IND_0603-LF	m38a[73C3]
L7315	IND_0603-LF	m38a[73B7]
L7316	IND_0603-LF	m38a[73B7]
L7317	IND_0603-LF	m38a[73A7]
L7318	IND_0603-LF	m38a[73B7]
L7319	IND_0603-LF	m38a[73B7]
L7323	IND_0603-LF	m38a[73B5]
L7324	IND_0603-LF	m38a[73B5]
L7325	IND_0603-LF	m38a[73A5]
L7326	IND_0603-LF	m38a[73B5]
L7327	IND_0603-LF	m38a[73B5]
L7381	IND_0603-LF	m38a[73A5]
L7500	IND_SM	m38a[75D1]
L7501	IND_SM	m38a[75B2]
L7502	IND_TH-VERT-LF	m38a[76D8]
L7700	IND_SM1-LF	m38a[77D2]
L7750	IND_SM-LF	m38a[77B4]
L7800	IND_3P_SM	m38a[78B3]
L7880	IND_0603-LF	m38a[73A7]
L7900	IND_3P_SM	m38a[79C3]
L8000	IND_3P_SM	m38a[80C3]
L8100	IND_IHLP	m38a[81C3]
L8400	IND_0402	m38a[84B7]
L8520	IND_IHLP	m38a[85C3]
L8715	IND_0402	m38a[87A7]
L8725	IND_0402	m38a[87A4]
L8910	IND_0402	m38a[89D7]
L8915	IND_0402	m38a[89D7]
L8960	IND_0402	m38a[89D4]
L8965	IND_0402	m38a[89D4]
L9010	IND_0402	m38a[90D7]
L9015	IND_0402	m38a[90D7]
L9060	IND_0402	m38a[90D4]
L9065	IND_0402	m38a[90D4]
L9120	IND_0402	m38a[91B6]
L9125	IND_0402	m38a[91B6]
L9130	IND_0402	m38a[91B7]
L9135	IND_0402	m38a[91A7]
L9140	IND_0402	m38a[91A7]
L9300	IND_0402	m38a[93C7]
L9305	IND_0402	m38a[93C7]
L9310	IND_0402	m38a[93C7]
L9315	IND_0402	m38a[93C7]
L9320	IND_0402	m38a[93B7]
L9325	IND_0402	m38a[93B7]
L9330	IND_0402	m38a[93B7]
L9345	IND_0402	m38a[93B7]
L9400	IND_SM	m38a[94C6]
L9700	FILTER_4P_2012H	m38a[97D7]
L9701	FILTER_4P_2012H	m38a[97D7]
L9702	FILTER_4P_2012H	m38a[97C7]
L9703	FILTER_4P_SM-LF	m38a[97C7]
L9710	IND_SM-1	m38a[97D5]
LED601	LED_2.0X1.25MM-SM	m38a[6A8]
LED602	LED_2.0X1.25MM-SM	m38a[6A7]
LED603	LED_2.0X1.25MM-SM	m38a[6A6]
LED3800	LED_2.0X1.25MM-SM	m38a[38B3]
LED5950	LED_3X2MM-SM	m38a[60A6]
LED6000	LED_NS3W315_ST-SM	m38a[60A6]
LED7900	LED_2.0X1.25MM-SM	m38a[79A4]
LED8000	LED_2.0X1.25MM-SM	m38a[80A4]
LED8100	LED_2.0X1.25MM-SM	m38a[81A4]
PP5E1	PROBEPOINT_SM	m38a[5B8]
PP5E2	PROBEPOINT_SM	m38a[5B8]
PP6A0	PROBEPOINT_SM	m38a[5A6]
PP6A1	PROBEPOINT_SM	m38a[5A6]
PP6A2	PROBEPOINT_SM	m38a[5A6]
PP6A3	PROBEPOINT_SM	m38a[5A6]
PP6A4	PROBEPOINT_SM	m38a[5A6]
PP6A5	PROBEPOINT_SM	m38a[5A6]
PP6A6	PROBEPOINT_SM	m38a[5A6]
PP6A7	PROBEPOINT_SM	m38a[5A6]
PP6A8	PROBEPOINT_SM	m38a[5A6]
PP6A9	PROBEPOINT_SM	m38a[5A6]
PP6B0	PROBEPOINT_SM	m38a[5A6]
PP6B1	PROBEPOINT_SM	m38a[5A6]
PP6B2	PROBEPOINT_SM	m38a[5A6]
PP6B3	PROBEPOINT_SM	m38a[5A6]
PP6B4	PROBEPOINT_SM	m38a[5A6]
PP6B5	PROBEPOINT_SM	m38a[5A6]
PP6B6	PROBEPOINT_SM	m38a[5A6]
PP6B7	PROBEPOINT_SM	m38a[5A6]
PP6B8	PROBEPOINT_SM	m38a[5A6]
PP6B9	PROBEPOINT_SM	m38a[5A6]
PP6C0	PROBEPOINT_SM	m38a[5A6]
PP6C1	PROBEPOINT_SM	m38a[5A6]
PP6C2	PROBEPOINT_SM	m38a[5A6]
PP6C3	PROBEPOINT_SM	m38a[5A6]
PP6C4	PROBEPOINT_SM	m38a[5C8]
PP6C5	PROBEPOINT_SM	m38a[5C8]
PP6C6	PROBEPOINT_SM	m38a[5C8]
PP6C7	PROBEPOINT_SM	m38a[5C8]
PP6C8	PROBEPOINT_SM	m38a[5C8]
PP6D0	PROBEPOINT_SM	m38a[5C8]
PP6D1	PROBEPOINT_SM	m38a[5C8]
PP6D2	PROBEPOINT_SM	m38a[5B8]
PP6D3	PROBEPOINT_SM	m38a[5B8]
PP6D4	PROBEPOINT_SM	m38a[5B8]
PP6D5	PROBEPOINT_SM	m38a[5B8]
PP6D6	PROBEPOINT_SM	m38a[5B8]
PP6D7	PROBEPOINT_SM	m38a[5B8]
PP6D8	PROBEPOINT_SM	m38a[5B8]
PP6D9	PROBEPOINT_SM	m38a[5B8]
PP6E0	PROBEPOINT_SM	m38a[5B8]
PP6E1	PROBEPOINT_SM	m38a[5B6]
PP600	PROBEPOINT_SM	m38a[5D8]
PP601	PROBEPOINT_SM	m38a[5D8]
PP602	PROBEPOINT_SM	m38a[5D8]
PP603	PROBEPOINT_SM	m38a[5D8]
PP604	PROBEPOINT_SM	m38a[5D8]
PP605	PROBEPOINT_SM	m38a[5D8]
PP606	PROBEPOINT_SM	m38a[5D8]
PP607	PROBEPOINT_SM	m38a[5D8]
PP608	PROBEPOINT_SM	m38a[5D8]
PP609	PROBEPOINT_SM	m38a[5D8]
PP610	PROBEPOINT_SM	m38a[5D8]
PP611	PROBEPOINT_SM	m38a[5D8]
PP612	PROBEPOINT_SM	m38a[5D8]
PP613	PROBEPOINT_SM	m38a[5D8]
PP614	PROBEPOINT_SM	m38a[5D8]
PP615	PROBEPOINT_SM	m38a[5D8]
PP616	PROBEPOINT_SM	m38a[5D8]
PP617	PROBEPOINT_SM	m38a[5D8]
PP618	PROBEPOINT_SM	m38a[5D8]
PP619	PROBEPOINT_SM	m38a[5D8]
PP620	PROBEPOINT_SM	m38a[5D8]
PP621	PROBEPOINT_SM	m38a[5C8]
PP622	PROBEPOINT_SM	m38a[5C8]
PP623	PROBEPOINT_SM	m38a[5C8]
PP624	PROBEPOINT_SM	m38a[5C8]
PP625	PROBEPOINT_SM	m38a[5C8]
PP626	PROBEPOINT_SM	m38a[5C8]
PP627	PROBEPOINT_SM	m38a[5C8]
PP628	PROBEPOINT_SM	m38a[5C8]
PP629	PROBEPOINT_SM	m38a[5C8]
PP630	PROBEPOINT_SM	m38a[5C8]
PP631	PROBEPOINT_SM	m38a[5D6]
PP632	PROBEPOINT_SM	m38a[5D6]
PP633	PROBEPOINT_SM	m38a[5D6]
PP634	PROBEPOINT_SM	m38a[5D6]
PP635	PROBEPOINT_SM	m38a[5D6]
PP636	PROBEPOINT_SM	m38a[5D6]
PP637	PROBEPOINT_SM	m38a[5D6]
PP638	PROBEPOINT_SM	m38a[5D6]
PP639	PROBEPOINT_SM	m38a[5D6]
PP640	PROBEPOINT_SM	m38a[5D6]
PP641	PROBEPOINT_SM	m38a[5D6]
PP642	PROBEPOINT_SM	m38a[5D6]
PP643	PROBEPOINT_SM	m38a[5D6]
PP644	PROBEPOINT_SM	m38a[5D6]
PP645	PROBEPOINT_SM	m38a[5D6]
PP646	PROBEPOINT_SM	m38a[5D6]
PP647	PROBEPOINT_SM	m38a[5D6]
PP648	PROBEPOINT_SM	m38a[5D6]
PP649	PROBEPOINT_SM	m38a[5D6]
PP650	PROBEPOINT_SM	m38a[5D6]
PP651	PROBEPOINT_SM	m38a[5D6]
PP652	PROBEPOINT_SM	m38a[5C6]
PP653	PROBEPOINT_SM	m38a[5C6]
PP654	PROBEPOINT_SM	m38a[5C6]
PP655	PROBEPOINT_SM	m38a[5C6]
PP656	PROBEPOINT_SM	m38a[5C6]
PP657	PROBEPOINT_SM	m38a[5C6]
PP658	PROBEPOINT_SM	m38a[5C6]
PP659	PROBEPOINT_SM	m38a[5C6]
PP660	PROBEPOINT_SM	m38a[5C6]
PP661	PROBEPOINT_SM	m38a[5C6]
PP662	PROBEPOINT_SM	m38a[5C6]
PP663	PROBEPOINT_SM	m38a[5C6]
PP664	PROBEPOINT_SM	m38a[5C6]
PP665	PROBEPOINT_SM	m38a[5C6]
PP666	PROBEPOINT_SM	m38a[5C6]
PP667	PROBEPOINT_SM	m38a[5C6]
PP668	PROBEPOINT_SM	m38a[5C6]
PP673	PROBEPOINT_SM	m38a[5C6]
PP674	PROBEPOINT_SM	m38a[5C6]
PP675	PROBEPOINT_SM	m38a[5B6]
PP676	PROBEPOINT_SM	m38a[5B6]
PP677	PROBEPOINT_SM	m38a[5B6]
PP678	PROBEPOINT_SM	m38a[5B6]
PP679	PROBEPOINT_SM	m38a[5B6]
PP680	PROBEPOINT_SM	m38a[5B6]
PP681	PROBEPOINT_SM	m38a[5B6]
PP682	PROBEPOINT_SM	m38a[5B6]
PP683	PROBEPOINT_SM	m38a[5B6]
PP684	PROBEPOINT_SM	m38a[5B6]
PP685	PROBEPOINT_SM	m38a[5B6]
PP686	PROBEPOINT_SM	m38a[5B6]
PP687	PROBEPOINT_SM	m38a[5B6]
PP688	PROBEPOINT_SM	m38a[5B6]
PP689	PROBEPOINT_SM	m38a[5B6]
PP690	PROBEPOINT_SM	m38a[5B6]
PP691	PROBEPOINT_SM	m38a[5B6]
PP692	PROBEPOINT_SM	m38a[5B6]
PP693	PROBEPOINT_SM	m38a[5B6]
PP694	PROBEPOINT_SM	m38a[5B6]
PP695	PROBEPOINT_SM	m38a[5B6]
PP696	PROBEPOINT_SM	m38a[5B6]
PP697	PROBEPOINT_SM	m38a[5B6]
PP698	PROBEPOINT_SM	m38a[5B6]
PP699	PROBEPOINT_SM	m38a[5B6]
PP700	TP_SM-TP50-TOP	m38a[5D3]
PP701	TP_SM-TP50-TOP	m38a[5D3]
PP702	TP_SM-TP50-TOP	m38a[5D3]
PP1200	TP_SM-TP50-TOP	m38a[5D3]
PP1201	TP_SM-TP50-TOP	m38a[5D3]
PP1202	TP_SM-TP50-TOP	m38a[5D3]
PP2800	TP_SM-TP50-TOP	m38a[5C3]
PP2801	TP_SM-TP50-TOP	m38a[5C3]
PP2802	TP_SM-TP50-TOP	m38a[5C3]
PP4100	PROBEPOINT_SM	m38a[5D4]
PP4101	PROBEPOINT_SM	m38a[5D4]
PP8400	PROBEPOINT_SM	m38a[5C5]
PP8401	PROBEPOINT_SM	m38a[5C5]
PP8700	PROBEPOINT_SM	m38a[5D5]
PP8701	PROBEPOINT_SM	m38a[5D5]
PP8702	PROBEPOINT_SM	m38a[5D5]
PP8703	PROBEPOINT_SM	m38a[5D5]
PP8704	PROBEPOINT_SM	m38a[5D5]
PP8705	PROBEPOINT_SM	m38a[5D5]
PP8706	PROBEPOINT_SM	m38a[5D5]
PP8707	PROBEPOINT_SM	m38a[5D5]
PP8708	PROBEPOINT_SM	m38a[5D5]
PP8709	PROBEPOINT_SM	m38a[5D5]
PP8710	PROBEPOINT_SM	m38a[5D5]
PP8711	PROBEPOINT_SM	m38a[5D5]
PP8712	PROBEPOINT_SM	m38a[5D5]
PP8713	PROBEPOINT_SM	m38a[5D5]
PP8714	PROBEPOINT_SM	m38a[5D5]
PP8715	PROBEPOINT_SM	m38a[5D5]
PP8716	PROBEPOINT_SM	m38a[5D5]
PP8720	PROBEPOINT_SM	m38a[5D5]
PP8721	PROBEPOINT_SM	m38a[5D5]
PP8722	PROBEPOINT_SM	m38a[5D5]
PP8723	PROBEPOINT_SM	m38a[5C5]
PP8724	PROBEPOINT_SM	m38a[5C5]
PP8725	PROBEPOINT_SM	m38a[5C5]
PP8726	PROBEPOINT_SM	m38a[5C5]
PP8727	PROBEPOINT_SM	m38a[5C5]
PP8728	PROBEPOINT_SM	m38a[5C5]
PP8729	PROBEPOINT_SM	m38a[5C5]
PP8730	PROBEPOINT_SM	m38a[5C5]
PP8731	PROBEPOINT_SM	m38a[5C5]
PP8732	PROBEPOINT_SM	m38a[5C5]
PP8733	PROBEPOINT_SM	m38a[5C5]
PP8734	PROBEPOINT_SM	m38a[5C5]
PP8735	PROBEPOINT_SM	m38a[5C5]
PP8736	PROBEPOINT_SM	m38a[5C5]
PP8900	PROBEPOINT_SM	m38a[5B5]
PP8901	PROBEPOINT_SM	m38a[5B5]
PP8902	PROBEPOINT_SM	m38a[5B5]
PP8903	PROBEPOINT_SM	m38a[5B5]
PP8904	PROBEPOINT_SM	m38a[5B5]
PP8905	PROBEPOINT_SM	m38a[5B5]
PP8906	PROBEPOINT_SM	m38a[5B5]
PP8907	PROBEPOINT_SM	m38a[5B5]
PP8908	PROBEPOINT_SM	m38a[5B5]
PP8909	PROBEPOINT_SM	m38a[5B5]
PP8910	PROBEPOINT_SM	m38a[5B5]
PP8911	PROBEPOINT_SM	m38a[5B5]
PP8912	PROBEPOINT_SM	m38a[5B5]
PP8913	PROBEPOINT_SM	m38a[5B5]
PP8914	PROBEPOINT_SM	m38a[5A5]
PP8915	PROBEPOINT_SM	m38a[5A5]
PP8916	PROBEPOINT_SM	m38a[5A5]
PP8920	PROBEPOINT_SM	m38a[5A5]
PP8921	PROBEPOINT_SM	m38a[5A5]
PP8922	PROBEPOINT_SM	m38a[5A5]
PP8923	PROBEPOINT_SM	m38a[5A5]
PP8924	PROBEPOINT_SM	m38a[5A5]
PP8925	PROBEPOINT_SM	m38a[5A5]
PP8926	PROBEPOINT_SM	m38a[5A5]
PP8927	PROBEPOINT_SM	m38a[5A5]
PP8928	PROBEPOINT_SM	m38a[5A5]
PP8929	PROBEPOINT_SM	m38a[5A5]
PP8930	PROBEPOINT_SM	m38a[5A5]
PP8931	PROBEPOINT_SM	m38a[5A5]
PP8932	PROBEPOINT_SM	m38a[5A5]
PP8933	PROBEPOINT_SM	m38a[5A5]
PP8934	PROBEPOINT_SM	m38a[5A5]
PP8935	PROBEPOINT_SM	m38a[5A5]
PP8936	PROBEPOINT_SM	m38a[5A5]
PP9000	PROBEPOINT_SM	m38a[5B4]
PP9001	PROBEPOINT_SM	m38a[5B4]
PP9002	PROBEPOINT_SM	m38a[5B4]
PP9003	PROBEPOINT_SM	m38a[5B4]
PP9004	PROBEPOINT_SM	m38a[5B4]
PP9005	PROBEPOINT_SM	m38a[5B4]
PP9006	PROBEPOINT_SM	m38a[5B4]
PP9007	PROBEPOINT_SM	m38a[5B4]
PP9008	PROBEPOINT_SM	m38a[5B4]
PP9009	PROBEPOINT_SM	m38a[5B4]
PP9010	PROBEPOINT_SM	m38a[5B4]
PP9011	PROBEPOINT_SM	m38a[5B4]
PP9012	PROBEPOINT_SM	m38a[5B4]
PP9013	PROBEPOINT_SM	m38a[5B4]
PP9014	PROBEPOINT_SM	m38a[5A4]
PP9015	PROBEPOINT_SM	m38a[5A4]
PP9016	PROBEPOINT_SM	m38a[5A4]
PP9020	PROBEPOINT_SM	m38a[5A4]
PP9021	PROBEPOINT_SM	m38a[5A4]
PP9022	PROBEPOINT_SM	m38a[5A4]
PP9023	PROBEPOINT_SM	m38a[5A4]
PP9024	PROBEPOINT_SM	m38a[5A4]
PP9025	PROBEPOINT_SM	m38a[5A4]
PP9026	PROBEPOINT_SM	m38a[5A4]
PP9027	PROBEPOINT_SM	m38a[5A4]
PP9028	PROBEPOINT_SM	m38a[5A4]
PP9029	PROBEPOINT_SM	m38a[5A4]
PP9030	PROBEPOINT_SM	m38a[5A4]
PP9031	PROBEPOINT_SM	m38a[5A4]
PP9032	PROBEPOINT_SM	m38a[5A4]
PP9033	PROBEPOINT_SM	m38a[5A4]
PP9034	PROBEPOINT_SM	m38a[5A4]
PP9035	PROBEPOINT_SM	m38a[5A4]
PP9036	PROBEPOINT_SM	m38a[5A4]
Q4201	TRA_PBSS5540Z_SOT223	m38a[42C6]
Q5901	TRA_2N7002DW_SOT-363	m38a[59C7 59C7]
Q5910	TRA_SINGLE_MOSFET_PC HN_SOT-23	m38a[59A4]
Q5911	TRA_2N7002_SOT23-LF	m38a[59A4]
Q5950	TRA_2N7002_SOT23-LF	m38a[60A7]
Q5951	TRA_2N7002_SOT23-LF	m38a[60B7]
Q5952	TRA_2N3906_SOT23-LF	m38a[60B6]
Q6500	TRA_NTHS5443T1_1206A-03-LF	m38a[65D4]
Q6502	TRA_2N7002_SOT23-LF	m38a[65D6]
Q6503	TRA_NTHS5443T1_1206A-03-LF	m38a[65B4]
Q6505	TRA_2N7002_SOT23-LF	m38a[65B6]
Q6600	TRA_NTHS5443T1_1206A-03-LF	m38a[66D4]
Q6602	TRA_2N7002_SOT23-LF	m38a[66C5]
Q7200	TRA_2N7002DW_SOT-363	m38a[72B6 72B7]
Q7400	TRA_2N7002DW_SOT-363	m38a[74B3 74B3]
Q7401	TRA_2N7002_SOT23-LF	m38a[74D5]
Q7402	TRA_2N7002DW_SOT-363	m38a[74B2 74B2]
Q7500	TRA_HAT2168H_LFPAK	m38a[75D3]
Q7501	TRA_HAT2165H_LFPAK	m38a[75D3]
Q7502	TRA_HAT2168H_LFPAK	m38a[75C3]
Q7503	TRA_HAT2165H_LFPAK	m38a[75B3]
Q7504	TRA_HAT2165H_LFPAK	m38a[75D3]
Q7505	TRA_HAT2165H_LFPAK	m38a[75B3]
Q7570	TRA_HAT2168H_LFPAK	m38a[75D2]
Q7572	TRA_HAT2168H_LFPAK	m38a[75C3]
Q7701	TRA_SI3446DV_TSOP-LF	m38a[77A3]
Q7703	TRA_2N7002DW_SOT-363	m38a[77C7 77D7]
Q7799	TRA_2N7002_SOT23-LF	m38a[77A7]
Q7800	TRA_NTD60N02R_CASE36 9-LF	m38a[78C4]
Q7801	TRA_NTD60N02R_CASE36 9-LF	m38a[78B4]
Q7802	TRA_2N7002_SOT23-LF	m38a[78B7]
Q7900	TRA_NTD60N02R_CASE36 9-LF	m38a[79D4]
Q7901	TRA_NTD60N02R_CASE36 9-LF	m38a[79C4]
Q7902	TRA_2N7002_SOT23-LF	m38a[79C7]
Q8000	TRA_NTD60N02R_CASE36 9-LF	m38a[80D4]
Q8001	TRA_NTD60N02R_CASE36 9-LF	m38a[80C4]
Q8003	TRA_2N7002_SOT23-LF	m38a[80C7]
Q8102	TRA_NTD60N02R_CASE36 9-LF	m38a[81D4]
Q8103	TRA_NTD60N02R_CASE36 9-LF	m38a[81C4]
Q8104	TRA_2N7002_SOT23-LF	m38a[81C7]
Q8300	TRA_IRF7413_SO-8	m38a[83C4]
Q8301	TRA_IRF7413_SO-8	m38a[83B4]
Q8302	TRA_2N7002DW_SOT-363	m38a[83B5]
Q8303	TRA_2N7002DW_SOT-363	m38a[83C5]
Q8520	TRA_HAT2168H_LFPAK	m38a[85D4]
Q8521	TRA_HAT2165H_LFPAK	m38a[85C4]
Q8522	TRA_HAT2165H_LFPAK	m38a[85C5]
Q9400	TRA_SI3443DV_TSOP-LF	m38a[94C7]
Q9401	TRA_2N7002_SOT23-LF	m38a[94C7]
Q9711	TRA_2N7002DW_SOT-363	m38a[97D2 97C2]
R75A0	RES_402	m38a[75C7]
R85A0	RES_402	m38a[85D1]
R600	RES_402	m38a[6A7]
R601	RES_402	m38a[6D8]
R602	RES_402	m38a[6A8]
R603	RES_402	m38a[6B1]
R605	RES_603	m38a[6A6]
R611	RES_402	m38a[6B7]
R612	RES_402	m38a[6B7]
R614	RES_402	m38a[6B7]
R615	RES_402	m38a[6B7]
R616	RES_402	m38a[6B7]
R617	RES_402	m38a[6B7]
R618	RES_402	m38a[6C7]
R619	RES_402	m38a[6C7]
R0701	RES_402	m38a[7C6]
R0702	RES_402	m38a[7D6]
R0703	RES_402	m38a[7C5]
R0704	RES_402	m38a[7C5]
R0705	RES_402	m38a[7B4]
R0706	RES_402	m38a[7B5]
R0707	RES_402	m38a[7A4]
R0712	RES_402	m38a[7A3]
R0716	RES_402	m38a[7B1]
R0717	RES_402	m38a[7B1]
R0718	RES_402	m38a[7B1]
R0719	RES_402	m38a[7B1]
R0720	RES_402	m38a[7B7]
R0721	RES_402	m38a[7B7]
R0722	RES_402	m38a[7A7]
R0730	RES_402	m38a[7A4]
R0802	RES_402	m38a[8B7]
R0803	RES_402	m38a[8A7]
R1000	RES_402	m38a[10D3]
R1001	RES_402	m38a[10D3]
R1002	RES_402	m38a[10C6]
R1005	RES_402	m38a[10D3]
R1017	RES_402	m38a[10C6]
R1018	RES_402	m38a[10B6]
R1019	RES_402	m38a[10B6]
R1100	RES_402	m38a[11B5]
R1101	RES_402	m38a[11C5]
R1102	RES_402	m38a[11B4]
R1103	RES_402	m38a[11C5]

R1104	RES_402	m38a[11B5]
R1106	RES_402	m38a[11A3]
R1210	RES_402	m38a[12C3]
R1211	RES_402	m38a[12C3]
R1220	RES_402	m38a[12B7]
R1221	RES_402	m38a[12B7]
R1225	RES_402	m38a[12B7]
R1226	RES_402	m38a[12B7]
R1230	RES_402	m38a[12A7]
R1231	RES_402	m38a[12A7]
R1235	RES_402	m38a[12A7]
R1236	RES_402	m38a[12A7]
R1310	RES_402	m38a[13D3]
R1410	RES_402	m38a[14C3]
R1411	RES_402	m38a[14C3]
R1420	RES_402	m38a[14B6]
R1430	RES_402	m38a[14B6]
R1440	RES_402	m38a[14D6]
R1441	RES_402	m38a[14D6]
R1975	RES_402	m38a[19A4]
R1980	RES_402	m38a[19B7]
R1981	RES_402	m38a[19B7]
R1982	RES_402	m38a[19B8]
R1983	RES_402	m38a[19B8]
R2058	RES_402	m38a[20B4]
R2059	RES_402	m38a[20B4]
R2060	RES_402	m38a[20A4]
R2075	RES_402	m38a[20C7]
R2077	RES_402	m38a[20B7]
R2079	RES_402	m38a[20B7]
R2085	RES_402	m38a[20C4]
R2100	RES_402	m38a[21C3]
R2101	RES_402	m38a[21C4]
R2105	RES_402	m38a[21D6]
R2107	RES_402	m38a[21C2]
R2108	RES_402	m38a[21C2]
R2110	RES_402	m38a[21C2]
R2194	RES_402	m38a[21D4]
R2195	RES_402	m38a[21C6]
R2196	RES_402	m38a[21C6]
R2197	RES_402	m38a[21C6]
R2198	RES_402	m38a[21C6]
R2199	RES_402	m38a[21C3]
R2200	RES_402	m38a[22D7]
R2203	RES_402	m38a[22C2]
R2204	RES_402	m38a[22C2]
R2205	RES_402	m38a[22C6]
R2206	RES_402	m38a[22C5]
R2207	RES_402	m38a[22C5]
R2211	RES_402	m38a[22B3]
R2222	RES_402	m38a[22D6]
R2223	RES_402	m38a[22D6]
R2225	RES_402	m38a[22D7]
R2226	RES_402	m38a[22D5]
R2250	RES_402	m38a[22D7]
R2251	RES_402	m38a[22D6]
R2255	RES_402	m38a[22D7]
R2298	RES_402	m38a[22B5]
R2299	RES_402	m38a[22B5]
R2302	RES_402	m38a[23D3]
R2303	RES_402	m38a[23D3]
R2305	RES_402	m38a[23D3]
R2306	RES_402	m38a[23B7]
R2307	RES_402	m38a[23A7]
R2308	RES_402	m38a[23B7]
R2309	RES_402	m38a[23A7]
R2310	RES_402	m38a[23A7]
R2311	RES_402	m38a[23A7]
R2313	RES_402	m38a[23A7]
R2314	RES_402	m38a[23A7]
R2316	RES_402	m38a[23D7]
R2317	RES_402	m38a[23D7]
R2318	RES_402	m38a[23D7]
R2319	RES_402	m38a[23D2]
R2320	RES_402	m38a[23D7]
R2323	RES_402	m38a[23D5]
R2326	RES_402	m38a[23D6]
R2327	RES_402	m38a[23D6]
R2343	RES_402	m38a[23D1]
R2388	RES_402	m38a[23A3]
R2389	RES_402	m38a[38D5]
R2390	RES_402	m38a[23B3]
R2395	RES_402	m38a[23D7]
R2396	RES_402	m38a[23D6]
R2397	RES_402	m38a[23D6]
R2398	RES_402	m38a[23D8]
R2399	RES_402	m38a[23C1]
R2500	RES_603	m38a[25A8]
R2501	RES_402	m38a[25C8]
R2502	RES_402	m38a[25D8]
R2600	RES_402	m38a[26C7]
R2606	RES_402	m38a[26C7]
R2607	RES_402	m38a[26C8]
R2609	RES_402	m38a[26D7]
R2611	RES_402	m38a[26D5]
R2612	RES_402	m38a[26D5]
R2622	RES_402	m38a[26D4]
R2623	RES_402	m38a[26D2]
R2624	RES_402	m38a[26D2]
R2625	RES_402	m38a[26D2]
R2626	RES_402	m38a[26D2]
R2627	RES_402	m38a[26D2]
R2628	RES_402	m38a[26D2]
R2629	RES_402	m38a[26D2]
R2630	RES_402	m38a[26D2]
R2631	RES_402	m38a[26D2]
R2632	RES_402	m38a[26D2]
R2633	RES_402	m38a[26D2]
R2634	RES_402	m38a[26D2]
R2636	RES_402	m38a[26D2]
R2637	RES_402	m38a[26D2]
R2638	RES_402	m38a[26D2]
R2639	RES_402	m38a[26D2]
R2640	RES_402	m38a[26C2]
R2641	RES_402	m38a[26C2]
R2642	RES_402	m38a[26C2]
R2643	RES_402	m38a[26C2]
R2650	RES_402	m38a[26C4]
R2651	RES_402	m38a[26C1]
R2696	RES_402	m38a[26B4]
R2697	RES_402	m38a[26C3]
R2698	RES_402	m38a[26C5]
R2699	RES_402	m38a[26C5]
R2718	RES_402	m38a[27B7]

R2719	RES_402	m38a[27B7]
R2750	RES_402	m38a[27C7]
R2751	RES_402	m38a[27C7]
R2800	RES_402	m38a[28C7]
R2801	RES_402	m38a[28C7]
R2900	RES_402	m38a[29A3]
R3001	RES_402	m38a[30D4]
R3009	RES_402	m38a[30D4]
R3011	RES_402	m38a[30C4]
R3025	RES_402	m38a[30C4]
R3035	RES_402	m38a[30B4]
R3100	RES_402	m38a[31C5]
R3101	RES_402	m38a[31C5]
R3300	RES_402	m38a[33B6]
R3301	RES_402	m38a[33B7]
R3302	RES_402	m38a[33D4]
R3303	RES_402	m38a[33C4]
R3304	RES_402	m38a[33C7]
R3400	RES_402	m38a[34C5]
R3401	RES_402	m38a[34B5]
R3402	RES_402	m38a[34B5]
R3403	RES_402	m38a[34C5]
R3404	RES_402	m38a[34C5]
R3405	RES_402	m38a[34C5]
R3406	RES_402	m38a[34C5]
R3407	RES_402	m38a[34B5]
R3408	RES_402	m38a[34B5]
R3409	RES_402	m38a[34B5]
R3410	RES_402	m38a[34B5]
R3411	RES_402	m38a[34B5]
R3412	RES_402	m38a[34B5]
R3413	RES_402	m38a[34B5]
R3414	RES_402	m38a[34B5]
R3415	RES_402	m38a[34B5]
R3416	RES_402	m38a[34B5]
R3417	RES_402	m38a[34B5]
R3418	RES_402	m38a[34B5]
R3419	RES_402	m38a[34A5]
R3420	RES_402	m38a[34A5]
R3421	RES_402	m38a[34A5]
R3422	RES_402	m38a[34A5]
R3423	RES_402	m38a[34A5]
R3424	RES_402	m38a[34A5]
R3429	RES_402	m38a[34C1]
R3430	RES_402	m38a[34C1]
R3431	RES_402	m38a[34C1]
R3432	RES_402	m38a[34C1]
R3433	RES_402	m38a[34C1]
R3434	RES_402	m38a[34C1]
R3435	RES_402	m38a[34C1]
R3436	RES_402	m38a[34C1]
R3437	RES_402	m38a[34C1]
R3438	RES_402	m38a[34C1]
R3439	RES_402	m38a[34C1]
R3440	RES_402	m38a[34C1]
R3441	RES_402	m38a[34C1]
R3442	RES_402	m38a[34C1]
R3443	RES_402	m38a[34B1]
R3444	RES_402	m38a[34B1]
R3445	RES_402	m38a[34B1]
R3446	RES_402	m38a[34B1]
R3451	RES_402	m38a[34C4]
R3452	RES_402	m38a[34B7]
R3453	RES_402	m38a[34B8]
R3454	RES_402	m38a[34B7]
R3455	RES_402	m38a[34B8]
R3456	RES_402	m38a[34B7]
R3457	RES_402	m38a[34B7]
R3458	RES_402	m38a[34B8]
R3459	RES_402	m38a[34A7]
R3460	RES_402	m38a[34A7]
R3461	RES_402	m38a[34A7]
R3462	RES_402	m38a[34A8]
R3463	RES_402	m38a[34A7]
R3470	RES_402	m38a[34A5]
R3471	RES_402	m38a[34A5]
R3485	RES_402	m38a[34D1]
R3486	RES_402	m38a[34D1]
R3487	RES_402	m38a[34D1]
R3488	RES_402	m38a[34D1]
R3489	RES_402	m38a[34D2]
R3490	RES_402	m38a[34D2]
R3491	RES_402	m38a[34D2]
R3492	RES_402	m38a[34D2]
R3493	RES_402	m38a[34D7]
R3494	RES_402	m38a[34D7]
R3495	RES_402	m38a[34D7]
R3496	RES_402	m38a[34C5]
R3497	RES_402	m38a[34D4]
R3498	RES_402	m38a[34D5]
R3499	RES_402	m38a[34D5]
R3824	RES_402	m38a[38D2]
R3851	RES_402	m38a[38D3]
R3852	RES_402	m38a[38D2]
R3853	RES_402	m38a[38D2]
R3857	RES_402	m38a[38B3]
R3858	RES_402	m38a[38B3]
R3859	RES_402	m38a[38B2]
R3897	RES_402	m38a[38B7]
R3899	RES_402	m38a[38B5]
R4101	RES_402	m38a[41D7]
R4102	RES_402	m38a[41C7]
R4103	RES_402	m38a[41C2]
R4104	RES_402	m38a[41C2]
R4105	RES_402	m38a[41C2]
R4106	RES_402	m38a[41C2]
R4117	RES_402	m38a[41B2]
R4118	RES_402	m38a[41B2]
R4119	RES_402	m38a[41B2]
R4120	RES_402	m38a[41B2]
R4122	RES_402	m38a[41A3]
R4123	RES_402	m38a[41A2]
R4130	RES_402	m38a[41C4]
R4131	RES_402	m38a[41C4]
R4150	RES_402	m38a[41C8]
R4151	RES_402	m38a[41D7]
R4202	RES_402	m38a[42D6]
R4300	RES_402	m38a[43D7]
R4350	RES_402	m38a[43C7]
R4351	RES_402	m38a[43C7]
R4352	RES_402	m38a[43C7]
R4353	RES_402	m38a[43C7]
R4354	RES_402	m38a[43C7]
R4355	RES_402	m38a[43C7]

R4356	RES_402	m38a[43C7]
R4357	RES_402	m38a[43B7]
R4402	RES_402	m38a[44B3]
R4403	RES_402	m38a[44B5]
R4407	RES_402	m38a[44A7]
R4409	RES_402	m38a[44B3]
R4410	RES_402	m38a[44D2]
R4411	RES_402	m38a[44D6]
R4412	RES_402	m38a[44C1]
R4413	RES_402	m38a[44C3]
R4414	RES_402	m38a[44C3]
R4416	RES_402	m38a[44A5]
R4450	RES_402	m38a[44B3]
R4451	RES_402	m38a[44B3]
R4452	RES_402	m38a[44B3]
R4453	RES_402	m38a[44B3]
R4454	RES_402	m38a[44B3]
R4455	RES_402	m38a[44B3]
R4650	RES_402	m38a[46C8]
R4651	RES_402	m38a[46C7]
R4652	RES_402	m38a[46B8]
R4653	RES_402	m38a[46B7]
R4654	RES_402	m38a[46B7]
R4656	RES_2512-1	m38a[46D6]
R4657	RES_805	m38a[46D6]
R4660	RES_402	m38a[46C7]
R4661	RES_402	m38a[46C7]
R4662	RES_402	m38a[46B7]
R4663	RES_402	m38a[46B7]
R4664	RES_402	m38a[46B7]
R4690	RES_402	m38a[46A7]
R4712	RES_402	m38a[47C5]
R4713	RES_402	m38a[47C5]
R4722	RES_402	m38a[47B5]
R4723	RES_402	m38a[47B5]
R4732	RES_402	m38a[47A5]
R4733	RES_402	m38a[47A5]
R4742	RES_402	m38a[47C2]
R4743	RES_402	m38a[47C2]
R4746	RES_805	m38a[47D2]
R4754	RES_402	m38a[47C2]
R4755	RES_402	m38a[47B2]
R5302	RES_402	m38a[53B4]
R5303	RES_402	m38a[53B4]
R5304	RES_402	m38a[53C6]
R5801	RES_402	m38a[58C2]
R5802	RES_402	m38a[58C2]
R5803	RES_402	m38a[58C2]
R5808	RES_402	m38a[59C3]
R5809	RES_402	m38a[58C2]
R5815	RES_402	m38a[59B3]
R5817	RES_402	m38a[59B3]
R5818	RES_402	m38a[59B3]
R5819	RES_402	m38a[59B3]
R5821	RES_402	m38a[59B3]
R5822	RES_402	m38a[59B3]
R5823	RES_402	m38a[59B3]
R5824	RES_402	m38a[59B3]
R5825	RES_402	m38a[59B3]
R5826	RES_402	m38a[59B3]
R5827	RES_402	m38a[59C5]
R5828	RES_402	m38a[59B3]
R5829	RES_402	m38a[59C3]
R5830	RES_402	m38a[59C3]
R5831	RES_402	m38a[59C3]
R5832	RES_402	m38a[59C3]
R5833	RES_402	m38a[59B3]
R5898	RES_402	m38a[58C2]
R5899	RES_402	m38a[58D3]
R5900	RES_402	m38a[59D7]
R5903	RES_402	m38a[59D2]
R5904	RES_402	m38a[59D2]
R5905	RES_402	m38a[59D2]
R5906	RES_402	m38a[59D2]
R5907	RES_402	m38a[59B7]
R5910	RES_402	m38a[59D2]
R5911	RES_402	m38a[59D2]
R5912	RES_402	m38a[59D2]
R5913	RES_402	m38a[59D2]
R5914	RES_402	m38a[59D2]
R5915	RES_402	m38a[59D2]
R5916	RES_402	m38a[59C2]
R5917	RES_402	m38a[59C2]
R5919	RES_402	m38a[59B4]
R5920	RES_402	m38a[59B5]
R5921	RES_402	m38a[59B5]
R5922	RES_402	m38a[59B5]
R5923	RES_402	m38a[59B5]
R5924	RES_402	m38a[59B5]
R5930	RES_402	m38a[59B6]
R5931	RES_402	m38a[59B6]
R5932	RES_402	m38a[59A7]
R5933	RES_402	m38a[59A7]
R5934	RES_402	m38a[59A6]
R5935	RES_402	m38a[59A6]
R5940	RES_402	m38a[59A3]
R5941	RES_402	m38a[59A5]
R5942	RES_402	m38a[59A4]
R5950	RES_402	m38a[60A7]
R5951	RES_402	m38a[60B7]
R5952	RES_402	m38a[60B6]
R5955	RES_402	m38a[60B7]
R5957	RES_402	m38a[60A7]
R5990	RES_402	m38a[60A7]
R5991	RES_402	m38a[60A7]
R5995	RES_402	m38a[59A5]
R6000	RES_402	m38a[60A6]
R6001	RES_402	m38a[60A6]
R6002	RES_402	m38a[60A6]
R6003	RES_402	m38a[60A5]
R6100	RES_402	m38a[61C4]
R6101	RES_402	m38a[61C5]
R6102	RES_402	m38a[61C5]
R6301	RES_402	m38a[63D4]
R6302	RES_402	m38a[63D4]
R6303	RES_402	m38a[63C2]
R6306	RES_402	m38a[63C2]
R6307	RES_402	m38a[63C5]
R6309	RES_402	m38a[63C5]
R6399	RES_402	m38a[63D2]
R6500	RES_402	m38a[65C7]
R6501	RES_402	m38a[65A7]
R6502	RES_1206	m38a[65D6]
R6503	RES_805	m38a[65D5]

R6504	RES_805	m38a[65C5]
R6505	RES_805	m38a[65D5]
R6506	RES_402	m38a[65D6]
R6507	RES_805	m38a[65B5]
R6508	RES_805	m38a[65B5]
R6509	RES_805	m38a[65B5]
R6510	RES_1206	m38a[65B6]
R6511	RES_402	m38a[65B6]
R6512	RES_805	m38a[65C5]
R6513	RES_805	m38a[65B5]
R6514	RES_805	m38a[65B4]
R6515	RES_805	m38a[65C4]
R6598	RES_402	m38a[65A7]
R6599	RES_402	m38a[65C7]
R6600	RES_402	m38a[66C7]
R6601	RES_805	m38a[66D5]
R6602	RES_805	m38a[66C4]
R6603	RES_805	m38a[66D5]
R6604	RES_1206	m38a[66D5]
R6605	RES_402	m38a[66D6]
R6606	RES_805	m38a[66C5]
R6607	RES_805	m38a[66C3]
R6697	RES_402	m38a[66C8]
R6700	RES_402	m38a[67C6]
R6702	RES_402	m38a[67C4]
R6703	RES_402	m38a[67C4]
R6704	RES_805	m38a[67C2]
R6705	RES_805	m38a[67C3]
R6798	RES_402	m38a[67B6]
R6799	RES_402	m38a[67B6]
R6800	RES_402	m38a[68C6]
R6802	RES_402	m38a[68A5]
R6807	RES_402	m38a[68D7]
R6808	RES_402	m38a[68D3]
R6810	RES_402	m38a[68A3]
R6811	RES_402	m38a[68A3]
R6815	RES_402	m38a[68B7]
R7208	RES_402	m38a[72A4]
R7212	RES_402	m38a[72B8]
R7213	RES_402	m38a[72B7]
R7214	RES_402	m38a[72C5]
R7215	RES_402	m38a[72C7]
R7216	RES_402	m38a[72C5]
R7217	RES_402	m38a[72B5]
R7218	RES_402	m38a[72A5]
R7219	RES_402	m38a[72B6]
R7302	RES_402	m38a[73A3]
R7305	RES_402	m38a[73C8]
R7306	RES_402	m38a[73D4]
R7308	RES_402	m38a[73B8]
R7400	RES_402	m38a[74B4]
R7404	RES_402	m38a[74D5]
R7405	RES_402	m38a[74D5]
R7407	RES_402	m38a[74B4]
R7408	RES_402	m38a[74A4]
R7409	RES_402	m38a[74B4]
R7410	RES_805	m38a[74D2]
R7411	RES_805	m38a[74C2]
R7412	RES_805	m38a[74C2]
R7413	RES_402	m38a[74B4]
R7414	RES_805	m38a[74B7]
R7415	RES_805	m38a[74B8]
R7416	RES_805	m38a[74C7]
R7417	RES_805	m38a[74C8]
R7418	RES_402	m38a[74B6]
R7419	RES_402	m38a[74B6]
R7420	RES_402	m38a[74D5]
R7421	RES_402	m38a[74D8]
R7422	RES_402	m38a[74D7]
R7423	RES_402	m38a[74B6]
R7424	RES_402	m38a[74B6]
R7425	RES_603	m38a[74A5]
R7426	RES_402	m38a[74A4]
R7427	RES_402	m38a[74A4]
R7430	RES_402	m38a[74C1]
R7431	RES_402	m38a[74C2]
R7435	RES_402	m38a[74A3]
R7437	RES_402	m38a[74C5]
R7440	RES_805	m38a[74D2]
R7442	RES_805	m38a[74D3]
R7443	RES_805	m38a[74D3]
R7500	RES_402	m38a[75C2]
R7501	RES_603	m38a[75C2]
R7502	RES_1206	m38a[75B2]
R7503	RES_1206	m38a[75D2]
R7504	RES_402	m38a[75C1]
R7505	RES_402	m38a[75B2]
R7506	RES_603	m38a[75B2]
R7507	RES_402	m38a[75B1]
R7508	RES_402	m38a[75B8]
R7509	RES_402	m38a[75B8]
R7510	RES_402	m38a[75B6]
R7511	RES_402	m38a[75B7]
R7512	RES_402	m38a[75D7]
R7513	RES_402	m38a[75B7]
R7514	RES_402	m38a[75B8]
R7515	RES_402	m38a[75B4]
R7516	RES_402	m38a[75B4]
R7517	RES_402	m38a[75B5]
R7518	RES_402	m38a[75B5]
R7519	RES_402	m38a[75C7]
R7520	RES_402	m38a[75D7]
R7521	RES_402	m38a[75D7]
R7522	RES_402	m38a[75A5]
R7523	RES_402	m38a[75A5]
R7526	THERMISTER_402	m38a[75C8]
R7527	RES_402	m38a[75C8]
R7528	RES_402	m38a[75A5]
R7529	RES_402	m38a[75A5]
R7530	RES_402	m38a[75B4]
R7531	THERMISTER_0603-LF	m38a[75B4]
R7540	RES_603	m38a[75C1]
R7541	RES_603	m38a[75B1]
R7590	RES_402	m38a[75C7]
R7591	RES_402	m38a[75C7]
R7592	RES_402	m38a[75C7]
R7593	RES_402	m38a[75C7]
R7594	RES_402	m38a[75C7]
R7595	RES_402	m38a[75C7]
R7596	RES_402	m38a[75D7]
R7597	RES_402	m38a[76D6]
R7598	RES_402	m38a[76D7]
R7599	RES_2512-1	m38a[76D7]
R7602	RES_402	m38a[76D3]

R7612	RES_402	m38a[76B2]
R7620	RES_402	m38a[76D2]
R7623	RES_402	m38a[76D1]
R7630	RES_402	m38a[76C8]
R7631	RES_402	m38a[76C8]
R7632	RES_402	m38a[76C7]
R7640	RES_402	m38a[76A7]
R7691	RES_402	m38a[76C7]
R7700	RES_402	m38a[77D3]
R7701	RES_402	m38a[77D4]
R7704	RES_402	m38a[77C4]
R7705	RES_402	m38a[77C3]
R7706	RES_402	m38a[77D2]
R7707	RES_402	m38a[77D1]
R7708	RES_402	m38a[77D1]
R7710	RES_402	m38a[77D3]
R7750	RES_402	m38a[77B4]
R7751	RES_402	m38a[77A4]
R7752	RES_402	m38a[77B4]
R7753	RES_402	m38a[77A6]
R7754	RES_402	m38a[77B7]
R7757	RES_402	m38a[77B7]
R7793	RES_402	m38a[77D7]
R7794	RES_402	m38a[77C7]
R7798	RES_402	m38a[77C7]
R7799	RES_402	m38a[77D7]
R7800	RES_402	m38a[78C7]
R7801	RES_402	m38a[78B7]
R7802	RES_402	m38a[78B3]
R7803	RES_402	m38a[78B3]
R7804	RES_1206	m38a[78B4]
R7805	RES_402	m38a[78B5]
R7812	RES_402	m38a[78B3]
R7840	RES_402	m38a[78C5]
R7892	RES_402	m38a[78B7]
R7901	RES_402	m38a[79C3]
R7902	RES_1206	m38a[79C4]
R7903	RES_402	m38a[79C3]
R7904	RES_402	m38a[79C5]
R7905	RES_402	m38a[79D7]
R7906	RES_402	m38a[79A4]
R7910	RES_402	m38a[79B2]
R7911	RES_402	m38a[79B3]
R7912	RES_402	m38a[79B3]
R7913	RES_402	m38a[79A2]
R7914	RES_402	m38a[79A3]
R7915	RES_402	m38a[79A3]
R7940	RES_402	m38a[79D5]
R7991	RES_402	m38a[79C7]
R7992	RES_402	m38a[79C7]
R7999	RES_402	m38a[79C3]
R8000	RES_402	m38a[80C3]
R8001	RES_402	m38a[80C7]
R8002	RES_1206	m38a[80C4]
R8003	RES_402	m38a[80C3]
R8004	RES_402	m38a[80C5]
R8005	RES_402	m38a[80D7]
R8007	RES_402	m38a[80A4]
R8010	RES_402	m38a[80B2]
R8011	RES_402	m38a[80B3]
R8012	RES_402	m38a[80B3]
R8040	RES_402	m38a[80C5]
R8092	RES_402	m38a[80C7]
R8099	RES_402	m38a[80C3]
R8101	RES_402	m38a[81C3]
R8102	RES_1206	m38a[81C4]
R8103	RES_402	m38a[81C3]
R8104	RES_402	m38a[81C5]
R8105	RES_402	m38a[81D7]
R8107	RES_402	m38a[81A4]
R8110	RES_402	m38a[81B3]
R8140	RES_402	m38a[81C5]
R8190	RES_402	m38a[81C3]
R8191	RES_402	m38a[81C7]
R8192	RES_402	m38a[81C7]
R8198	RES_402	m38a[81A5]
R8199	RES_402	m38a[81A5]
R8300	RES_402	m38a[83B4]
R8301	RES_402	m38a[83C5]
R8302	RES_402	m38a[83B5]
R8303	RES_402	m38a[83C4]
R8495	RES_402	m38a[84A2]
R8496	RES_402	m38a[84A2]
R8497	RES_402	m38a[84A2]
R8502	RES_402	m38a[85D6]
R8503	RES_402	m38a[85D7]
R8504	RES_402	m38a[85D7]
R8505	RES_402	m38a[85C7]
R8506	RES_402	m38a[85C8]
R8507	RES_402	m38a[85D7]
R8508	RES_402	m38a[85C7]
R8510	RES_402	m38a[85C5]
R8521	RES_402	m38a[85C3]
R8522	RES_402	m38a[85C3]
R8588	RES_402	m38a[85C5]
R8590	RES_402	m38a[85C3]
R8591	RES_402	m38a[85D3]
R8592	RES_402	m38a[85D2]
R8593	RES_402	m38a[85D3]
R8594	RES_402	m38a[85D3]
R8596	RES_402	m38a[85D3]
R8597	THERMISTER_0603-LF	m38a[85D3]
R8598	RES_402	m38a[85D2]
R8599	RES_1206	m38a[85C4]
R8630	RES_603	m38a[86C7]
R8710	RES_402	m38a[87B8]
R8711	RES_402	m38a[87A8]
R8712	RES_402	m38a[87B7]
R8713	RES_402	m38a[87A7]
R8720	RES_402	m38a[87B4]
R8721	RES_402	m38a[87A4]
R8722	RES_402	m38a[87B4]
R8723	RES_402	m38a[87A4]
R8730	RES_402	m38a[87A3]
R8731	RES_402	m38a[87A3]
R8732	RES_402	m38a[87A3]
R8733	RES_402	m38a[87A1]
R8800	RES_603	m38a[88D7]
R8801	RES_402	m38a[88A7]
R8802	RES_402	m38a[88D4]
R8803	RES_402	m38a[88D4]
R8804	RES_402	m38a[88D4]
R8805	RES_402	m38a[88C4]
R8806	RES_402	m38a[88C4]
R8807	RES_402	m38a[88C4]
R8808	RES_402	m38a[88C4]
R8809	RES_402	m38a[88C4]
R8810	RES_402	m38a[88C4]
R8811	RES_402	m38a[88B4]
R8812	RES_402	m38a[88C4]
R8813	RES_402	m38a[88D4]
R8830	RES_402	m38a[88B4]
R8831	RES_402	m38a[88B4]
R8832	RES_402	m38a[88B4]
R8833	RES_402	m38a[88B4]
R8850	RES_402	m38a[88B4]
R8930	RES_402	m38a[89C7]
R8931	RES_402	m38a[89C7]
R8932	RES_402	m38a[89C7]
R8933	RES_402	m38a[89C7]
R8940	RES_402	m38a[89B8]
R8941	RES_402	m38a[89B8]
R8942	RES_402	m38a[89B7]
R8943	RES_402	m38a[89B7]
R8944	RES_402	m38a[89B7]
R8945	RES_402	m38a[89B7]
R8946	RES_402	m38a[89B7]
R8947	RES_402	m38a[89B7]
R8948	RES_402	m38a[89A7]
R8949	RES_402	m38a[89A7]
R8980	RES_402	m38a[89C4]
R8981	RES_402	m38a[89C4]
R8982	RES_402	m38a[89C4]
R8983	RES_402	m38a[89C4]
R8990	RES_402	m38a[89B5]
R8991	RES_402	m38a[89B4]
R8992	RES_402	m38a[89B4]
R8993	RES_402	m38a[89B4]
R8994	RES_402	m38a[89B4]
R8995	RES_402	m38a[89B4]
R8996	RES_402	m38a[89B4]
R8997	RES_402	m38a[89B4]
R8998	RES_402	m38a[89A4]
R8999	RES_402	m38a[89A4]
R9030	RES_402	m38a[90C7]
R9031	RES_402	m38a[90C7]
R9032	RES_402	m38a[90C7]
R9033	RES_402	m38a[90C7]
R9040	RES_402	m38a[90B8]
R9041	RES_402	m38a[90B8]
R9042	RES_402	m38a[90B7]
R9043	RES_402	m38a[90B7]
R9044	RES_402	m38a[90B7]
R9045	RES_402	m38a[90B7]
R9046	RES_402	m38a[90B7]
R9047	RES_402	m38a[90B7]
R9048	RES_402	m38a[90A7]
R9049	RES_402	m38a[90A7]
R9080	RES_402	m38a[90C4]
R9081	RES_402	m38a[90C4]
R9082	RES_402	m38a[90C4]
R9083	RES_402	m38a[90C4]
R9090	RES_402	m38a[90B5]
R9091	RES_402	m38a[90B4]
R9092	RES_402	m38a[90B4]
R9093	RES_402	m38a[90B4]
R9094	RES_402	m38a[90B4]
R9095	RES_402	m38a[90B4]
R9096	RES_402	m38a[90B4]
R9097	RES_402	m38a[90B4]
R9098	RES_402	m38a[90A4]
R9099	RES_402	m38a[90A4]
R9190	RES_402	m38a[91D2]
R9191	RES_402	m38a[91D2]
R9195	RES_402	m38a[91A3]
R9202	RES_402	m38a[92C6]
R9250	RES_402	m38a[92C6]
R9350	RES_402	m38a[93A8]
R9351	RES_402	m38a[93A8]
R9370	RES_402	m38a[93D1]
R9371	RES_402	m38a[93D1]
R9372	RES_402	m38a[93C1]
R9373	RES_402	m38a[93C1]
R9390	RES_402	m38a[93A1]
R9391	RES_402	m38a[93A1]
R9400	RES_402	m38a[94C8]
R9401	RES_402	m38a[94C7]
R9410	RES_402	m38a[94C6]
R9411	RES_402	m38a[94C6]
R9450	RES_402	m38a[94C2]
R9470	RES_402	m38a[94C7]
R9472	RES_402	m38a[94B3]
R9473	RES_402	m38a[94B2]
R9474	RES_402	m38a[94B2]
R9475	RES_402	m38a[94B1]
R9490	RES_805	m38a[94C6]
R9491	RES_805	m38a[94D6]
R9701	RES_402	m38a[97D8]
R9706	RES_402	m38a[97D8]
R9707	RES_402	m38a[97C8]
R9710	RES_402	m38a[97D2]
R9711	RES_402	m38a[97D2]
R9712	RES_402	m38a[97D2]
R9713	RES_402	m38a[97C2]
R9714	RES_402	m38a[97C2]
R9716	RES_402	m38a[97C8]
R9717	RES_402	m38a[97C8]
R9720	RES_402	m38a[97D1]
R9721	RES_402	m38a[97D1]
R9722	RES_402	m38a[97C2]
R9740	RES_402	m38a[97A8]
R9741	RES_402	m38a[97A8]
R9742	RES_402	m38a[97A7]
R9750	RES_402	m38a[97B3]
R9751	RES_402	m38a[97A3]
RP2300	RPAK4P_SM-LF	m38a[23D5]
RP3000	RPAK4P_SM-LF	m38a[30B4 30C4 30D4 30D4]
RP3001	RPAK4P_SM-LF	m38a[30C4 30A4 30A4 30D4]
RP3002	RPAK4P_SM-LF	m38a[30A4 30A4 30A4 30D4]
RP3003	RPAK4P_SM-LF	m38a[30C4 30C4 30C4 30D4]
RP3004	RPAK4P_SM-LF	m38a[30C4 30C4 30D4]
RP3005	RPAK4P_SM-LF	m38a[30B4 30A4 30A4 30D4]
RP3006	RPAK4P_SM-LF	m38a[30B4 30B4 30A4 30D4]
RP3007	RPAK4P_SM-LF	m38a[30C4 30C4 30C4 30C4]
RP3008	RPAK4P_SM-LF	m38a[30C4 30C4 30C4 30C4]
RP3009	RPAK4P_SM-LF	m38a[30B4 30B4 30C4 30C4]
RP3010	RPAK4P_SM-LF	m38a[30B4 30B4 30B4 30B4]
RP3011	RPAK4P_SM-LF	m38a[30B4 30A4 30B4 30B4]
RP7200	RPAK4P_SM-LF	m38a[72A4]
SDF4700	PCB_STANDOFF	m38a[47A2]
SDF4701	PCB_STANDOFF	m38a[47A2]
SDF5300	PCB_STANDOFF	m38a[53A5]
SDF5301	PCB_STANDOFF	m38a[53A5]
SDF9400	PCB_STANDOFF	m38a[94B6]
SDF9401	PCB_STANDOFF	m38a[94A6]
SW2600	SWI_TACT_4SM_EVQPH_S M-LF	m38a[26C6]
SW5900	SWI_TACT_4SM_EVQPH_S M-LF	m38a[59D8]
SW5901	SWI_TACT_4SM_EVQPH_S M-LF	m38a[59B8]
U600	74LC125_TSSOP	m38a[6B7 6B7 6B7 6C7]
U601	SN74LVC1G04_SOT23-5	m38a[6C7]
U650	74AHC1G32_SM-LF	m38a[6A7]
U1000	ADT7461_MSOP	m38a[10D5]
U1200	NB_945GM_BGA	m38a[12D5]
U1200	NB_945GM_BGA	m38a[13D4]
U1200	NB_945GM_BGA	m38a[14D5]
U1200	NB_945GM_BGA	m38a[15D3 15D7]
U1200	NB_945GM_BGA	m38a[16D2 16C8]
U1200	NB_945GM_BGA	m38a[17D5]
U1200	NB_945GM_BGA	m38a[18D4 18D7]
U2100	SB_ICH7M_BGA	m38a[21D6]
U2100	SB_ICH7M_BGA	m38a[22B7 22D3]
U2100	SB_ICH7M_BGA	m38a[23D4]
U2100	SB_ICH7M_BGA	m38a[24D4 24D7]
U2601	MC74VHC1G08_SOT23-5-LF	m38a[26D5]
U2603	SN74LVC1G04_SOT23-5	m38a[26A7]
U2698	MC74VHC1G08_SOT23-5-LF	m38a[26C4]
U2699	MAX6816_SOT143	m38a[26C5]
U3100	LREG_BD3533FVM_MSOP-8	m38a[31C5]
U3301	CLK_GEN_CY284455_QFN	m38a[33C5]
U4101	88E8053_QFN	m38a[41D5]
U4102	EEPROM_M24C08_SO8	m38a[41A3]
U4400	FW32306_TQFP	m38a[44D5]
U4700	SWI_TPS2043_SOI	m38a[47C7]
U5800	SMC_H8S2116_BGA	m38a[58A8 58C3 58C6 58D6]
U5900	VDET_RN5VD_SOT23-5	m38a[59D8]
U5940	VREF_REF3133_SOT23-3	m38a[59A4]
U5999	COMPARATOR_LM393_SOI -1-LF	m38a[59A8 59A8]
U6100	MAX6695_UMAX	m38a[61C4]
U6301	FLASH_SST25VF016B_SOI_SOI	m38a[63D3]
U6700	TPM_TSSOP	m38a[67C5]
U6800	AUDIO_STAC92204XR_LQFP	m38a[68D5]
U7200	MAX9714_QFN-LF	m38a[72C5]
U7400	MAX9890_UCSP1	m38a[74C4]
U7500	ISL6262_QFN	m38a[75C6]
U7501	ZXCT1010_SOT23-5	m38a[76D7]
U7700	LTC3411_MSOP-LF	m38a[77D3]
U7710	MC74VHC1G08_SOT23-5-LF	m38a[77D5]
U7711	MC74VHC1G08_SOT23-5-LF	m38a[77C5]
U7712	MC74VHC1G08_SOT23-5-LF	m38a[77D4]
U7750	SN200505068_SOP	m38a[77B6]
U7800	ISL6549_QFN	m38a[78C6]
U7900	ISL6549_QFN	m38a[79D6]
U7901	COMPARATOR_LM339A_SOI-LF	m38a[79A5]
U7901	COMPARATOR_LM339A_SOI-LF	m38a[80A4]
U7901	COMPARATOR_LM339A_SOI-LF	m38a[81A5]
U7910	COMPARATOR_LM339A_SOI-LF	m38a[79A3 79B3]
U7910	COMPARATOR_LM339A_SOI-LF	m38a[80B2]
U7910	COMPARATOR_LM339A_SOI-LF	m38a[81B3]
U8000	ISL6549_QFN	m38a[80D6]
U8100	ISL6549_QFN	m38a[81D6]
U8400	ATI_M56P_BGA	m38a[84C8 84D4]
U8400	ATI_M56P_BGA	m38a[86D4]
U8400	ATI_M56P_BGA	m38a[87D2 87D6]
U8400	ATI_M56P_BGA	m38a[91D4]
U8400	ATI_M56P_BGA	m38a[93C4]
U8500	ISL6269_QFN	m38a[85D6]
U8595	OPAMP_LMV2011_SOT23-5	m38a[85D2]
U8900	SGRAM_16MX32_GDDR3_136H_FBGA	m38a[89D6 89B6]
U8950	SGRAM_16MX32_GDDR3_136H_FBGA	m38a[89D3 89B3]
U9000	SGRAM_16MX32_GDDR3_136H_FBGA	m38a[90D6 90B6]
U9050	SGRAM_16MX32_GDDR3_136H_FBGA	m38a[90D3 90B3]
U9470	MC74VHC1G08_SOT23-5-LF	m38a[94B2]
U9750	74AHC1G32_SM-LF	m38a[97B4]
U9751	74AHC1G32_SM-LF	m38a[97A4]
VR6800	LREG_MAX1819_UCSP	m38a[68A4]
XC7200	MTGHOLE	m38a[72B3]
XW601	SHORT_SM	m38a[6C2]
XW602	SHORT_SM	m38a[6C2]
XW604	SHORT_SM	m38a[6A5]
XW605	SHORT_SM	m38a[6A5]
XW5800	SHORT_SM	m38a[58B3]
XW5900	SHORT_SM	m38a[59B1]
XW6801	SHORT_SM	m38a[68B5]
XW7201	SHORT_SM	m38a[72B2]
XW7300	SHORT_SM	m38a[73C3]
XW7307	SHORT_SM	m38a[73C6]
XW7400	SHORT_SM	m38a[74A4]
XW7440	SHORT_SM	m38a[74C2]
XW7500	SHORT_SM	m38a[75A6]
XW7501	SHORT_SM	m38a[75B2]
XW7502	SHORT_SM	m38a[75B1]
XW7503	SHORT_SM	m38a[75D2]
XW7504	SHORT_SM	m38a[75D1]
XW7598	SHORT_SM	m38a[76D7]
XW7700	SHORT_SM	m38a[77C2]
XW7750	SHORT_SM	m38a[77A5]
XW7800	SHORT_SM	m38a[78B6]
XW7900	SHORT_SM	m38a[79C6]
XW8000	SHORT_SM	m38a[80C6]
XW8100	SHORT_SM	m38a[81C6]
XW8500	SHORT_SM	m38a[85C6]
Y2600	CRYSTAL_4PIN_SM-LF	m38a[26D8]
Y3301	CRYSTAL_5X3.2-SM	m38a[33C7]
Y4101	CRYSTAL_SM-3-LF	m38a[41B5]
Y4400	CRYSTAL_HC49-USMD	m38a[44D2]
Y5800	CRYSTAL_SM-3	m38a[59B8]
Y6700	CRYSTAL_4PIN_SM-LF	m38a[59B7]
ZH500	HOLE_VIA	m38a[5C1]
ZH501	HOLE_VIA	m38a[5C1]
ZH502	HOLE_VIA	m38a[5C1]
ZH503	HOLE_VIA	m38a[5C1]
ZH504	HOLE_VIA	m38a[5B1]
ZH505	HOLE_VIA	m38a[5B1]
ZH506	HOLE_VIA	m38a[5B1]
ZH507	HOLE_VIA	m38a[5B1]
ZH508	HOLE_VIA	m38a[5B1]
ZH509	HOLE_VIA	m38a[5B1]
ZH510	HOLE_VIA	m38a[5C1]
ZH511	HOLE_VIA	m38a[5C1]
ZH512	HOLE_VIA	m38a[5C1]
ZH513	HOLE_VIA	m38a[5C1]
ZH514	HOLE_VIA	m38a[5B1]
ZH515	HOLE_VIA	m38a[5B1]
ZH516	HOLE_VIA	m38a[5B1]
ZH517	HOLE_VIA	m38a[5B1]
ZH518	HOLE_VIA	m38a[5B1]
ZH519	HOLE_VIA	m38a[5B1]
ZH520	HOLE_VIA	m38a[5C1]
ZH521	HOLE_VIA	m38a[5C1]
ZH522	HOLE_VIA	m38a[5C1]
ZH523	HOLE_VIA	m38a[5C1]
ZH524	HOLE_VIA	m38a[5B1]
ZH525	HOLE_VIA	m38a[5B1]
ZH526	HOLE_VIA	m38a[5B1]
ZH527	HOLE_VIA	m38a[5B1]
ZH528	HOLE_VIA	m38a[5B1]
ZH529	HOLE_VIA	m38a[5B1]
ZH601	MTGHOLE	m38a[6A3]
ZH602	MTGHOLE	m38a[6A3]
ZH603	MTGHOLE	m38a[6A3]
ZH604	MTGHOLE	m38a[6B3]
ZH606	MTGHOLE	m38a[6A1]
ZH607	MTGHOLE	m38a[9D4]
ZH608	MTGHOLE	m38a[9D3]
ZH609	MTGHOLE	m38a[9D2]
ZH610	MTGHOLE	m38a[9D2]
ZH611	MTGHOLE	m38a[9C3]