321 V.A

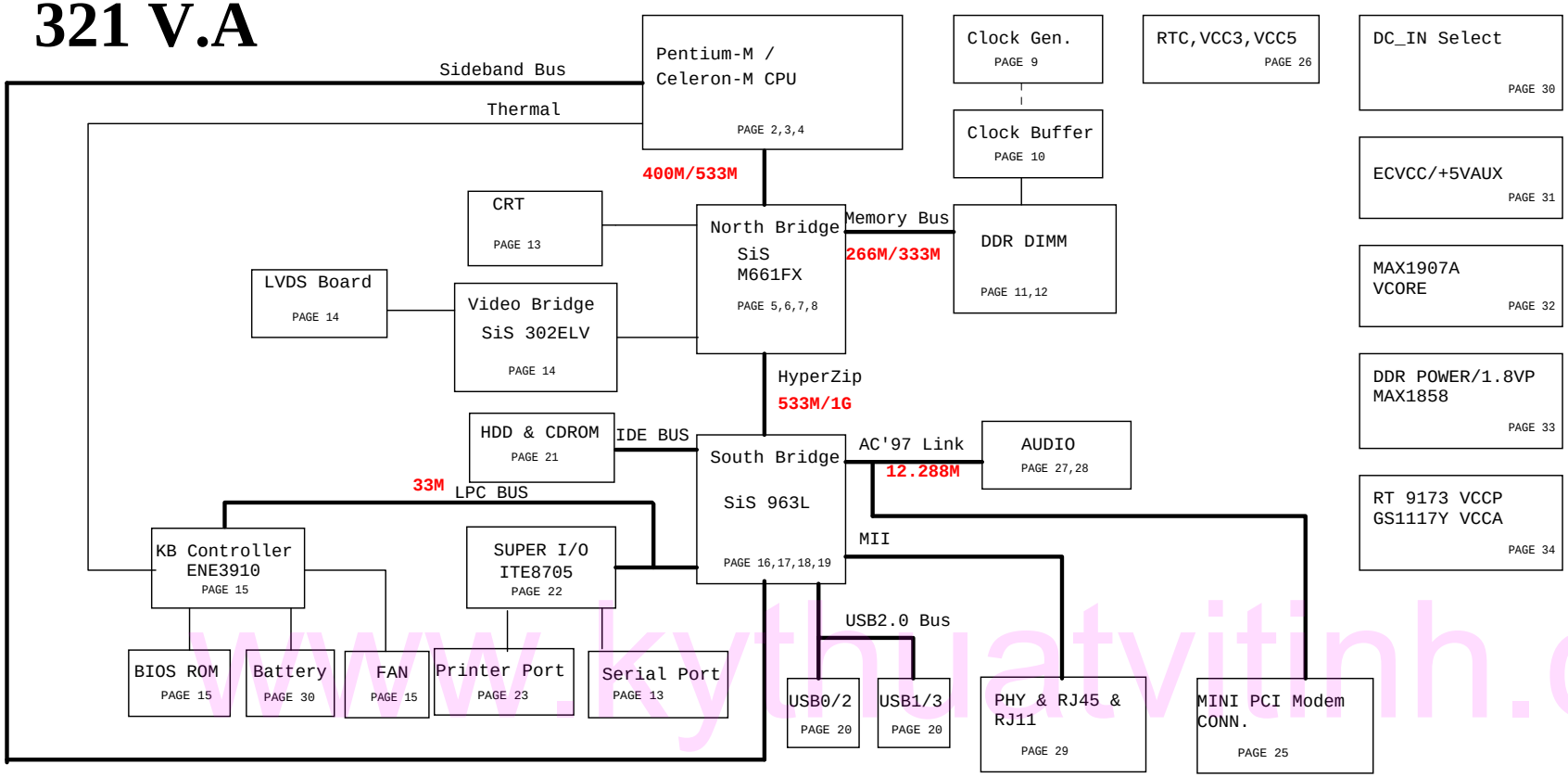

P/N :15-F61-010010
GERBER :

PAGE	1	2	3	4	5	6	7	8	9	10	11	12	13	14	15	16	17	18	19	20
REV	A.0	A.0	A.0	A.0	A.0	A.0	A.0	A.0	A.0	A.0	A.0	A.0	A.0	A.0	A.0	A.0	A.0	A.0	A.0	A.0
DATE	2005/01/25	2005/01/25	2005/01/25	2005/01/25	2005/01/25	2005/01/25	2005/01/25	2005/01/25	2005/01/25	2005/01/25	2005/01/25	2005/01/25	2005/01/25	2005/01/25	2005/01/25	2005/01/25	2005/01/25	2005/01/25	2005/01/25	2005/01/25

PAGE	21	22	23	24	25	26	27	28	29	30	31	32	33	34
REV	A.0	A.0	A.0	A.0	A.0	A.0	A.0	A.0	A.0	A.0	A.0	A.0	A.0	A.0
DATE	2005/01/25	2005/01/25	2005/01/25	2005/01/25	2005/01/25	2005/01/25	2005/01/25	2005/01/25	2005/01/25	2005/01/25	2005/01/25	2005/01/25	2005/01/25	2005/01/25

www.kythuatvitinh.com

Diễn Đàn
KyThuatViTinh.Com

Digitally signed by fdsf
DN: cn=fdsf, o=fsdfsd, ou=ffsdf, email=fdfsd@fsdff, c=US
Date: 2010.01.06 06:15:11 +07'00'

Elitegroup Computer Systems

Title: 321-1-4-01
Size: B
Document Number: 321-1-4-01
Rev: A.0
Date: Wednesday, February 02, 2005
Sheet 1 of 35

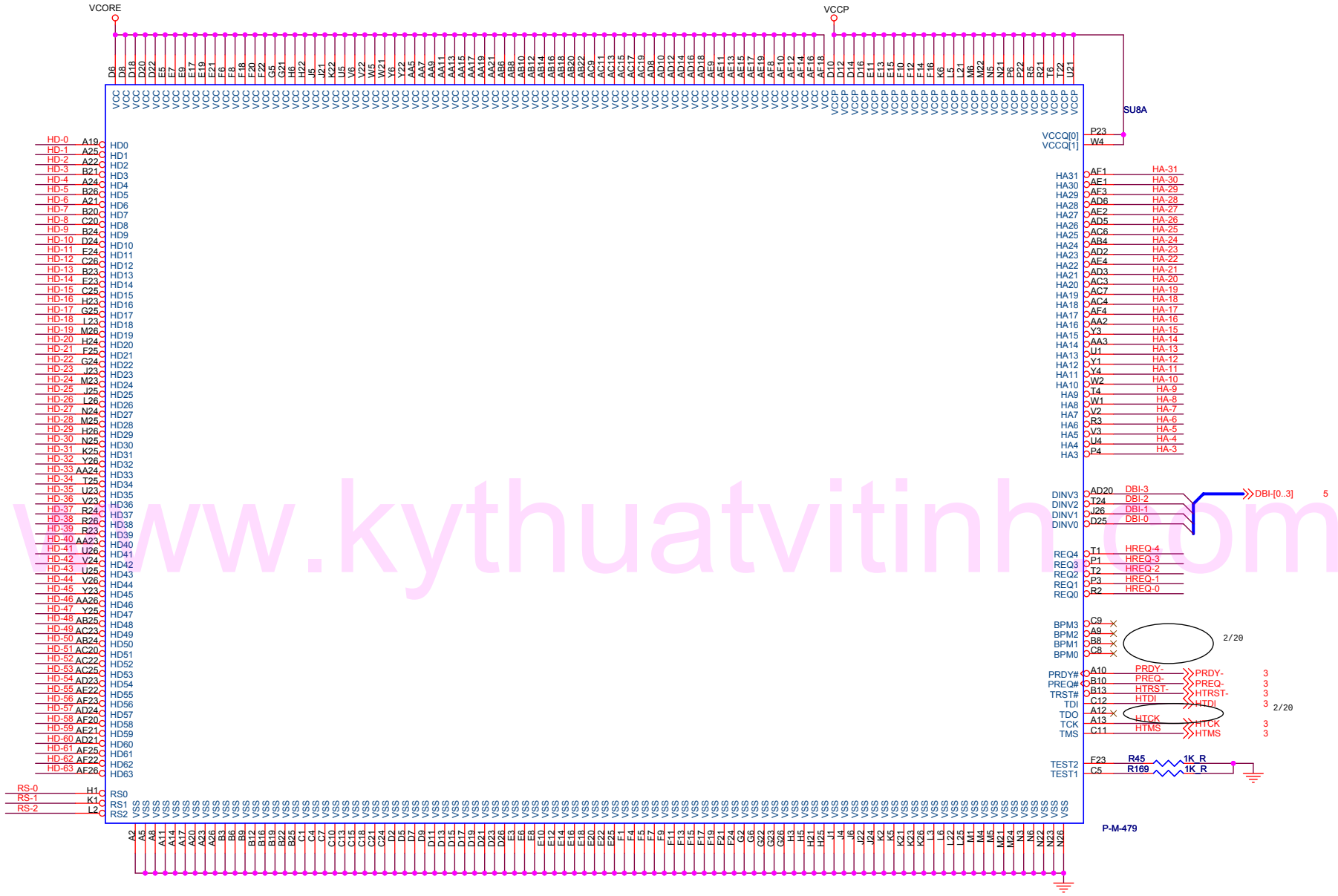

www.kythuatvitinh.com

Elitegroup Computer Systems	
Title	Mobil Banias CPU(1 of 3)
Size A3	Document Number 321-1-4-01
Rev	A.0
Date: Wednesday, February 02, 2005	Sheet 2 of 35

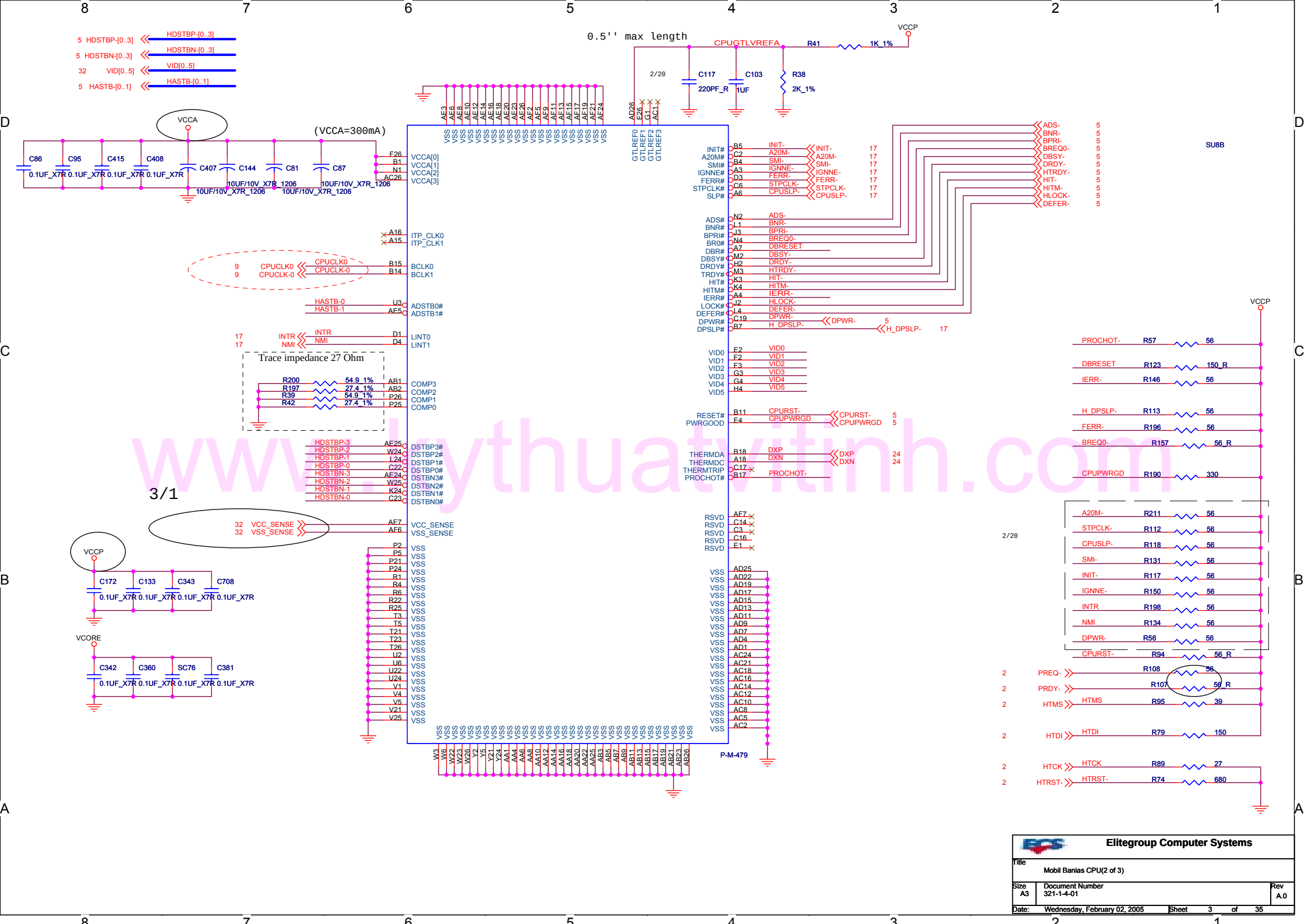

www.kythuatvitinh.com

Elitegroup Computer Systems

Title: Mobil Banias CPU(2 of 3)

Size: A3 | Document Number: 321-1-4-01 | Rev: A.0

Date: Wednesday, February 02, 2005 | Sheet 3 of 35

Bus Signal	Data Bus Signals	Associated Strobe	
DINV[0]#	D[0..15]#	DSTBN[0]#	DSTBP[0]#
DINV[1]#	D[16..31]#	DSTBN[1]#	DSTBP[1]#
DINV[2]#	D[32..47]#	DSTBN[2]#	DSTBP[2]#
DINV[3]#	D[48..63]#	DSTBN[3]#	DSTBP[3]#

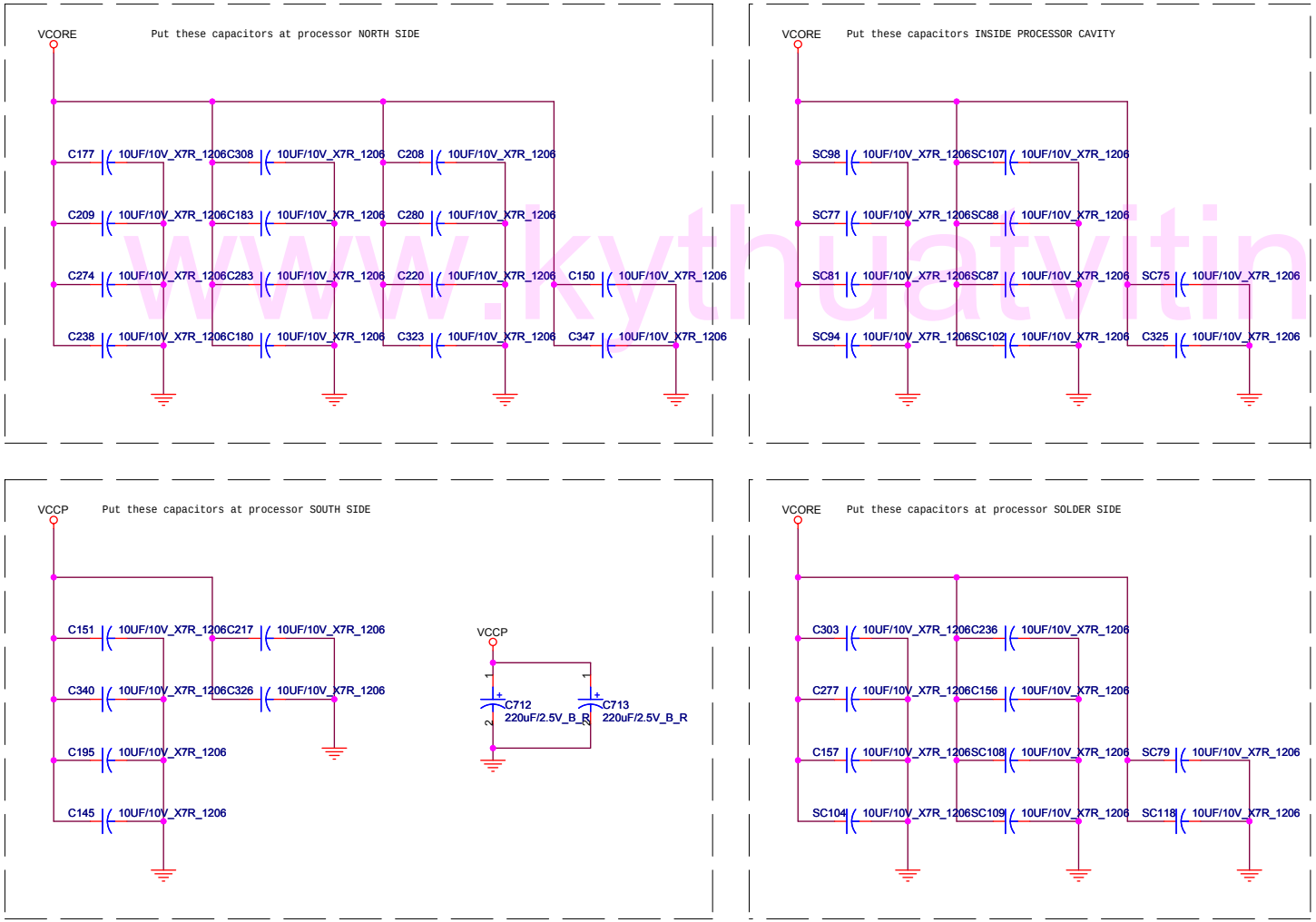

P.S. Choose X7R/X5R components instead of Y5V for all 10uF_1206 capacitors on this page.

www.kythuatvitinh.com

Elitegroup Computer Systems

Title: Mobil Banias CPU(3 of 3)

Size: A3 | Document Number: 321-1-4-01 | Rev: A.0

Date: Wednesday, February 02, 2005 | Sheet 4 of 35

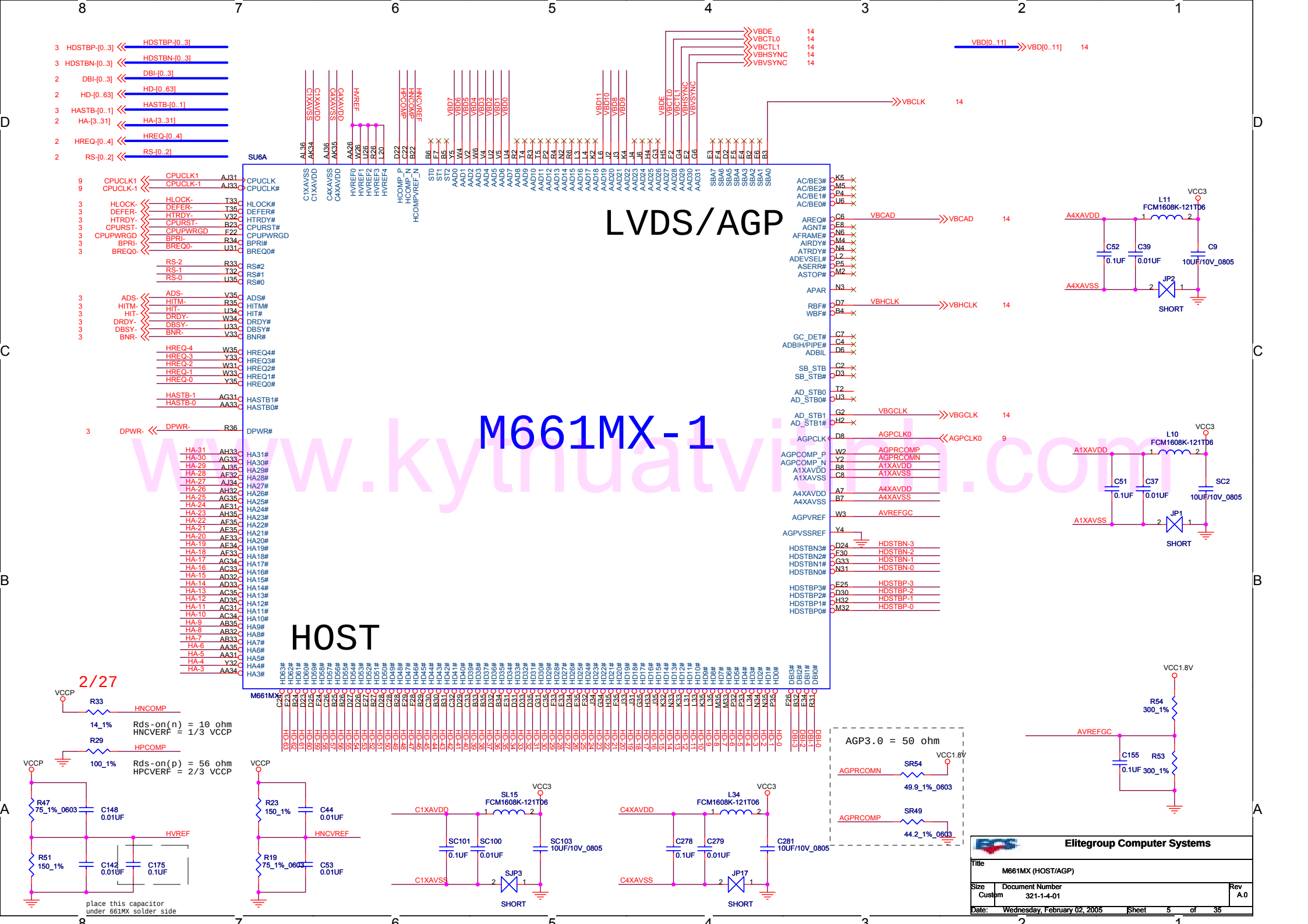

www.kythuatvinh.com

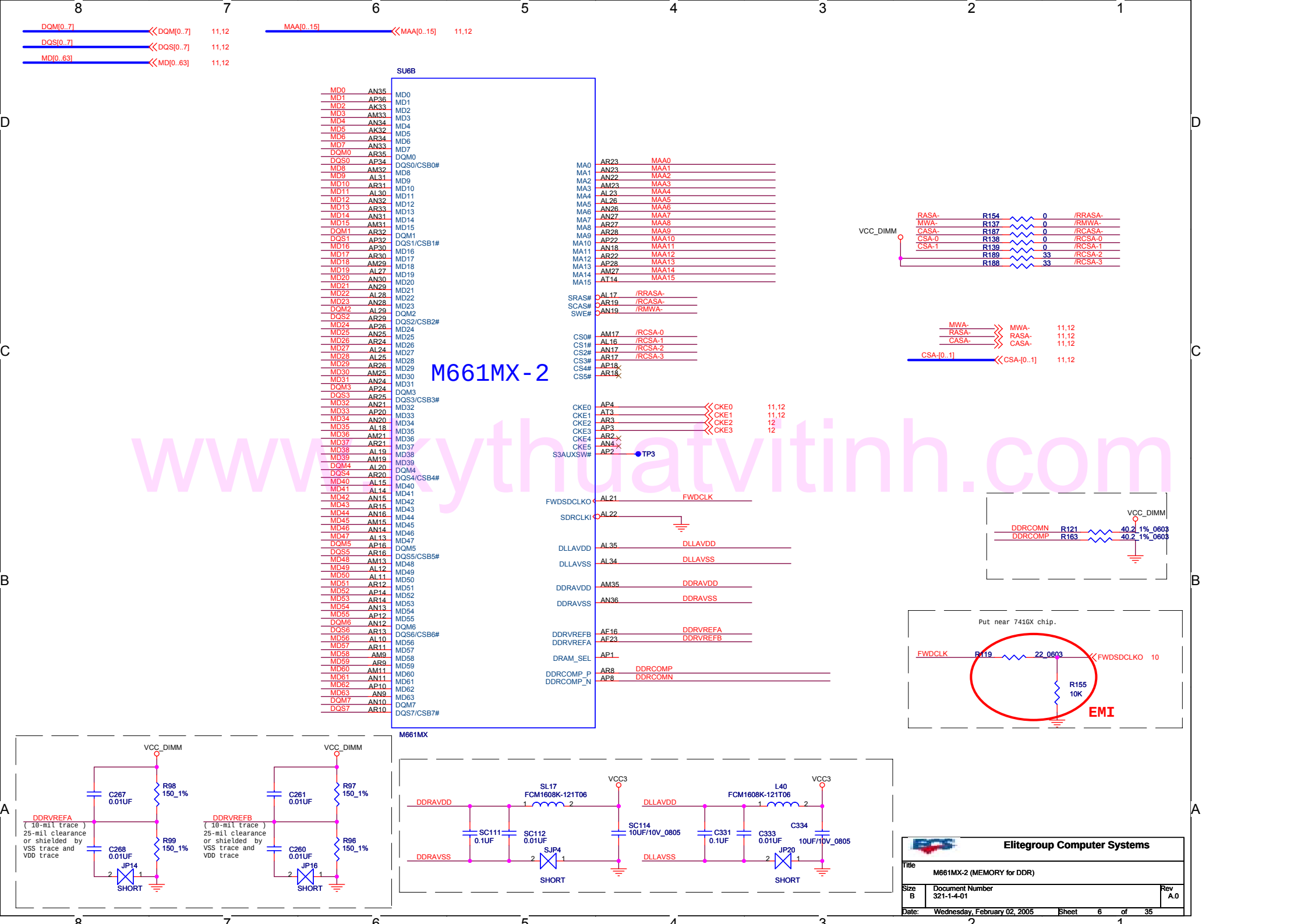

www.kythuatvitinh.com

NB Hardware Trap Table

SW2 Pin		Description	ON/1	OFF/0	Default
S1	DLLEN-	CPUCLK SDCLK PLL/DLL Circuit Enable	DISABLE	ENABLE	OFF
S2	TRAP0	Debug Mode Select	ENABLE	DISABLE	OFF
S3	TMODE1	MuTIOL (ASL) Initialize Series Mode	DISABLE	ENABLE	OFF
S4	TMODE2	NB ASL DBI REGISTER MODE	DISABLE	ENABLE	OFF
S5	TRAP1	MuTIOL Type (Verision 1 , 2)	Ver. 1	Ver. 2	OFF

NB Hardware Trap internal pull-low

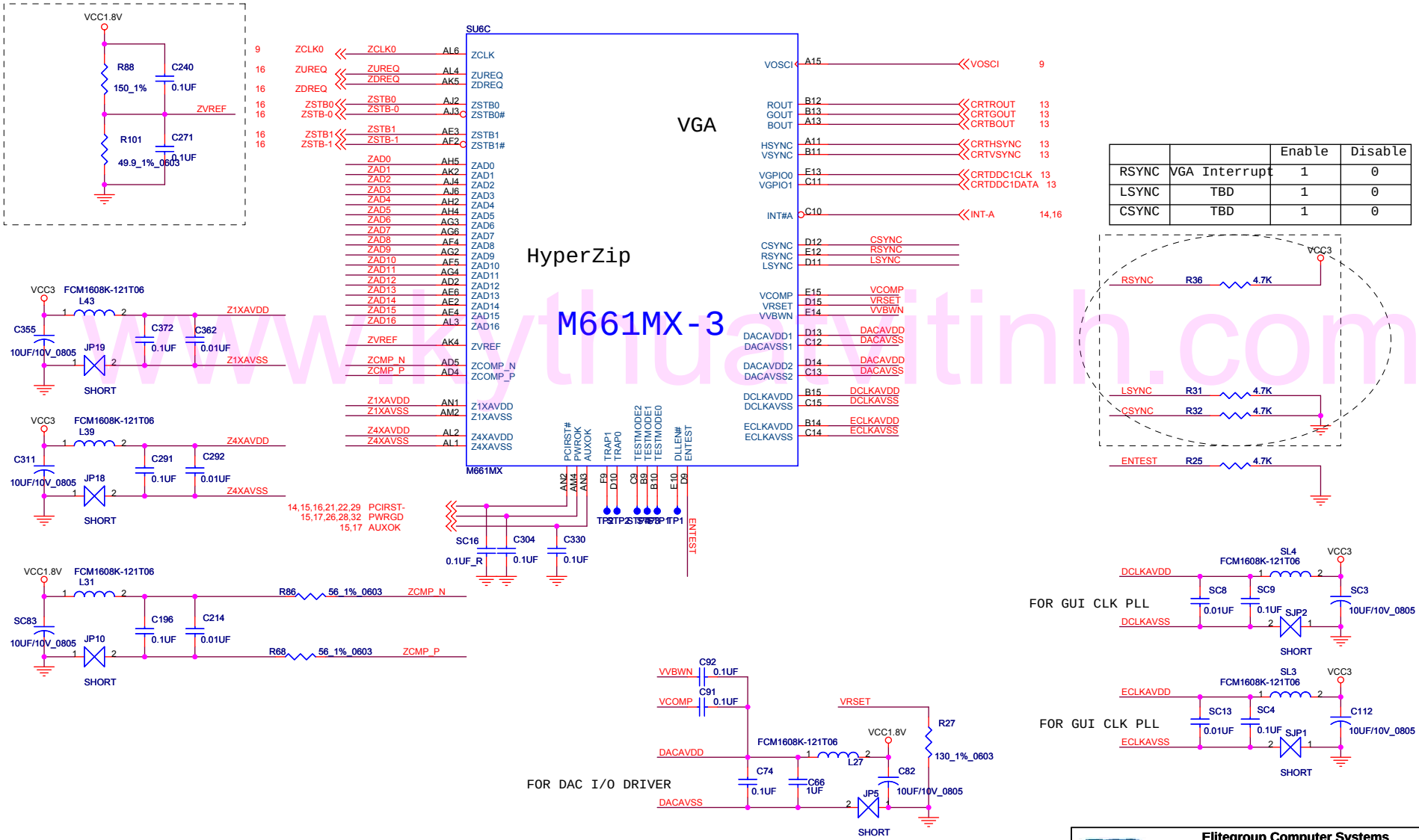

		Enable	Disable
RSYNC	VGA Interrupt	1	0
LSYNC	TBD	1	0
CSYNC	TBD	1	0

www.kythuatvitinh.com

Elitegroup Computer Systems

Title: M661MX-3 (Hyper Zip/VGA)

Size	Document Number	Rev
B	321-1-4-01	A.0

Date: Wednesday, February 02, 2005 Sheet 7 of 35

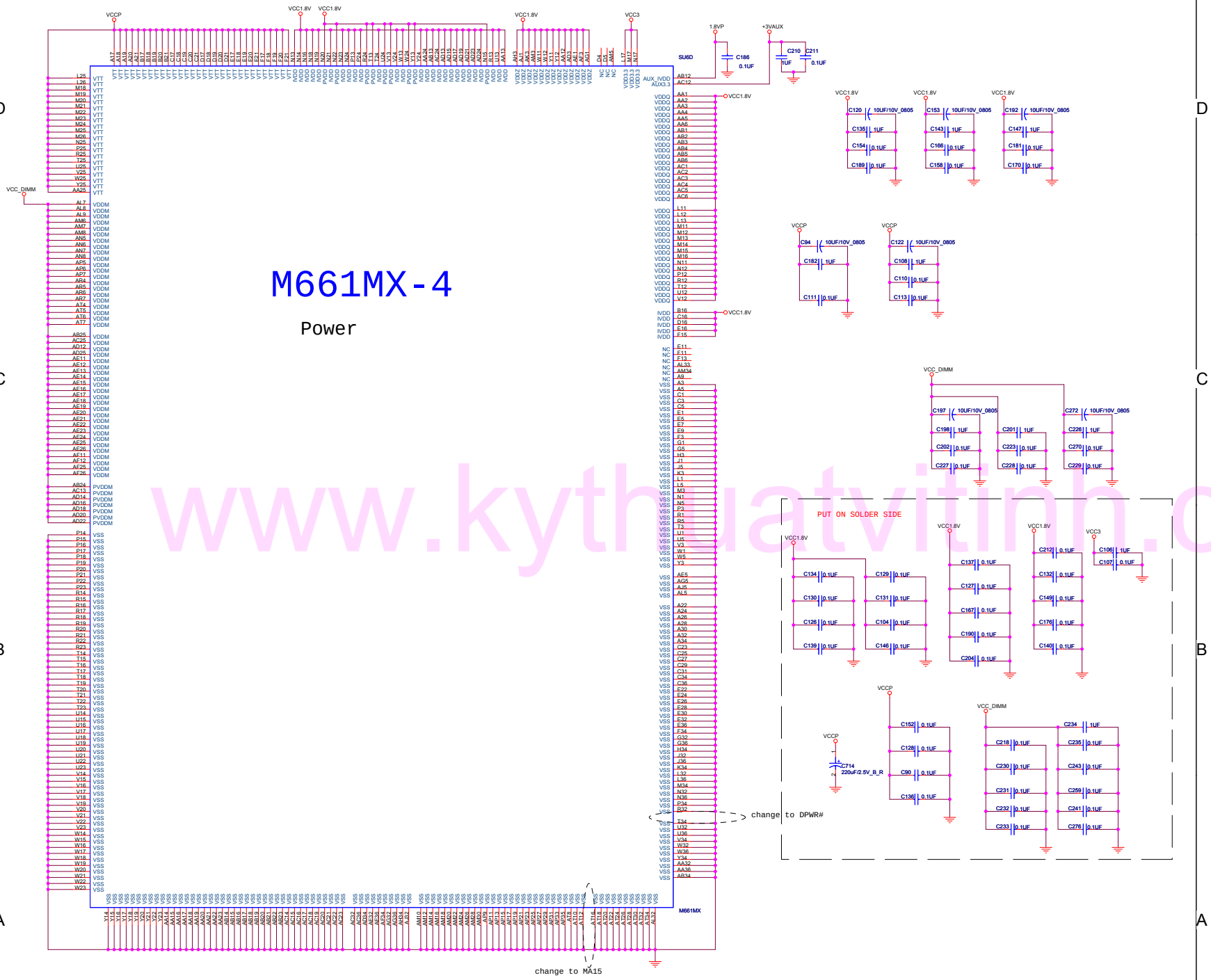

www.kythuatvitinh.com

Elitegroup Computer Systems

Title: M661MX-4(POWER)

Size: Custom | Document Number: 321-1-4-01 | Rev: A.0

Date: Wednesday, February 02, 2005 | Sheet 8 of 35

Main Clock Generator

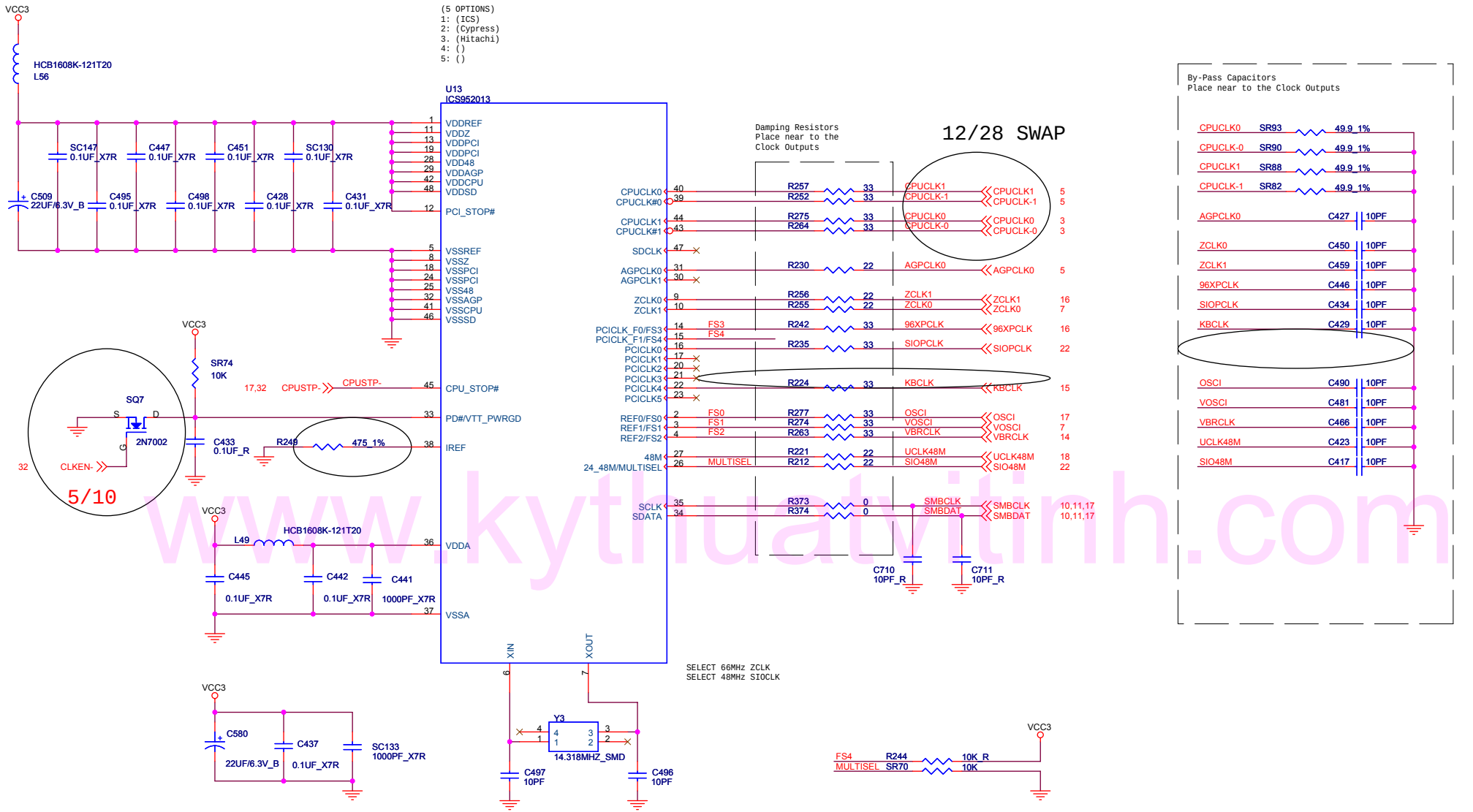

www.kythuatvitinh.com

Different clock generator with different frequency define table

ICS952013

(FS4)	(FS3)	(FS2)	(FS1)	(FS0)	CPU (MHz)	ZCLK (MHz)	AGPCLK (MHz)	PCI (MHz)	SDRAM (MHz)
0	0	0	0	0	100.00	133.33	66.66	33.33	100.00
0	0	0	0	1	100.00	133.33	66.66	33.33	133.33
0	0	0	1	0	100.00	133.33	66.66	33.33	200.00
0	0	0	1	1	100.00	133.33	66.66	33.33	160.00
0	0	1	0	0	133.33	133.33	66.66	33.33	100.00
0	0	1	0	1	133.33	133.33	66.66	33.33	133.33
0	0	1	1	0	133.33	133.33	66.66	33.33	200.00
0	0	1	1	1	133.33	133.33	66.66	33.33	166.66
0	1	0	0	0	200.00	133.33	66.66	33.33	100.00
0	1	0	0	1	200.00	133.33	66.66	33.33	133.33
0	1	0	1	0	200.00	133.33	66.66	33.33	200.00
0	1	0	1	1	200.00	133.33	66.66	33.33	160.00
0	1	1	0	0	160.00	133.33	66.66	33.33	100.00
0	1	1	0	1	166.66	133.33	66.66	33.33	133.33
0	1	1	1	0	160.00	133.33	66.66	33.33	200.00
0	1	1	1	1	166.66	133.33	66.66	33.33	166.66

ICS952013

(FS4)	(FS3)	(FS2)	(FS1)	(FS0)	CPU (MHz)	ZCLK (MHz)	AGPCLK (MHz)	PCI (MHz)	SDRAM (MHz)
1	0	0	0	0	100.00	66.66	66.66	33.33	100.00
1	0	0	0	1	100.00	66.66	66.66	33.33	133.33
1	0	0	1	0	100.00	66.66	66.66	33.33	200.00
1	0	0	1	1	100.00	66.66	66.66	33.33	166.66
1	0	1	0	0	133.33	66.66	66.66	33.33	100.00
1	0	1	0	1	133.33	66.66	66.66	33.33	133.33
1	0	1	1	0	133.33	66.66	66.66	33.33	200.00
1	0	1	1	1	133.33	66.66	66.66	33.33	166.66
1	1	0	0	0	100.99	67.33	67.33	33.66	100.99
1	1	0	0	1	100.99	67.33	67.33	33.66	134.65
1	1	0	1	0	100.99	67.33	67.33	33.66	201.98
1	1	0	1	1	100.99	67.33	67.33	33.66	168.31
1	1	1	0	0	134.65	67.33	67.33	33.66	100.00
1	1	1	0	1	134.65	67.33	67.33	33.66	134.65
1	1	1	1	0	134.65	67.33	67.33	33.66	201.98
1	1	1	1	1	134.65	67.33	67.33	33.66	168.31

Elitegroup Computer SystemS

Title	CLOCK GENERATOR	
Size B	Document Number 321-1-4-01	Rev A.0
Date: Wednesday, February 02, 2005	Sheet 9 of 35	

Clock Buffer (DDR)

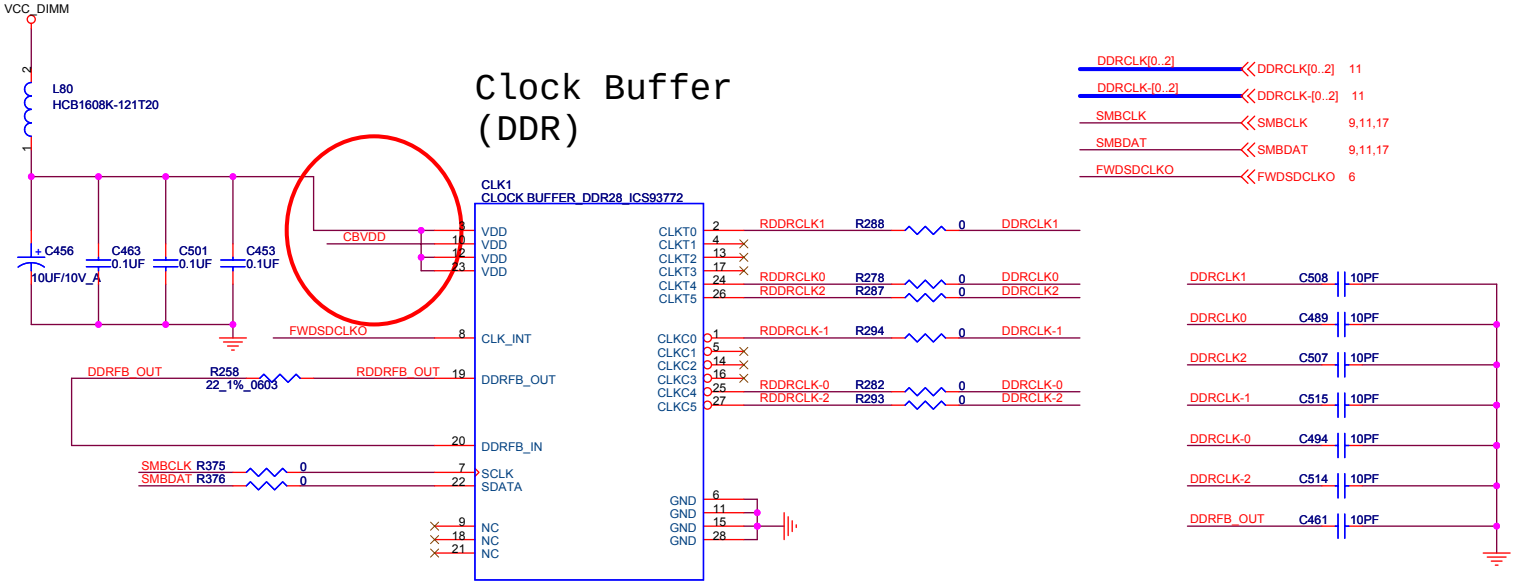

www.kythuatvitinh.com

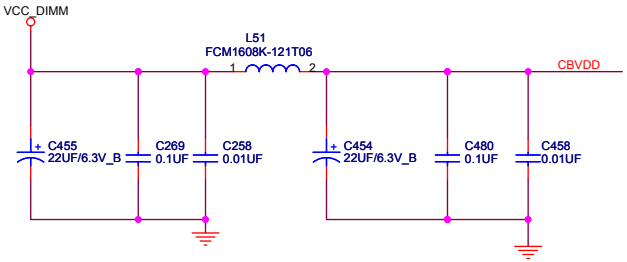

Elitegroup Computer Systems		
Title: CLOCK BUFFER FOR DDR		
Size: B	Document Number: 321-1-4-01	Rev: A.0
Date: Wednesday, February 02, 2005	Sheet 10 of 35	

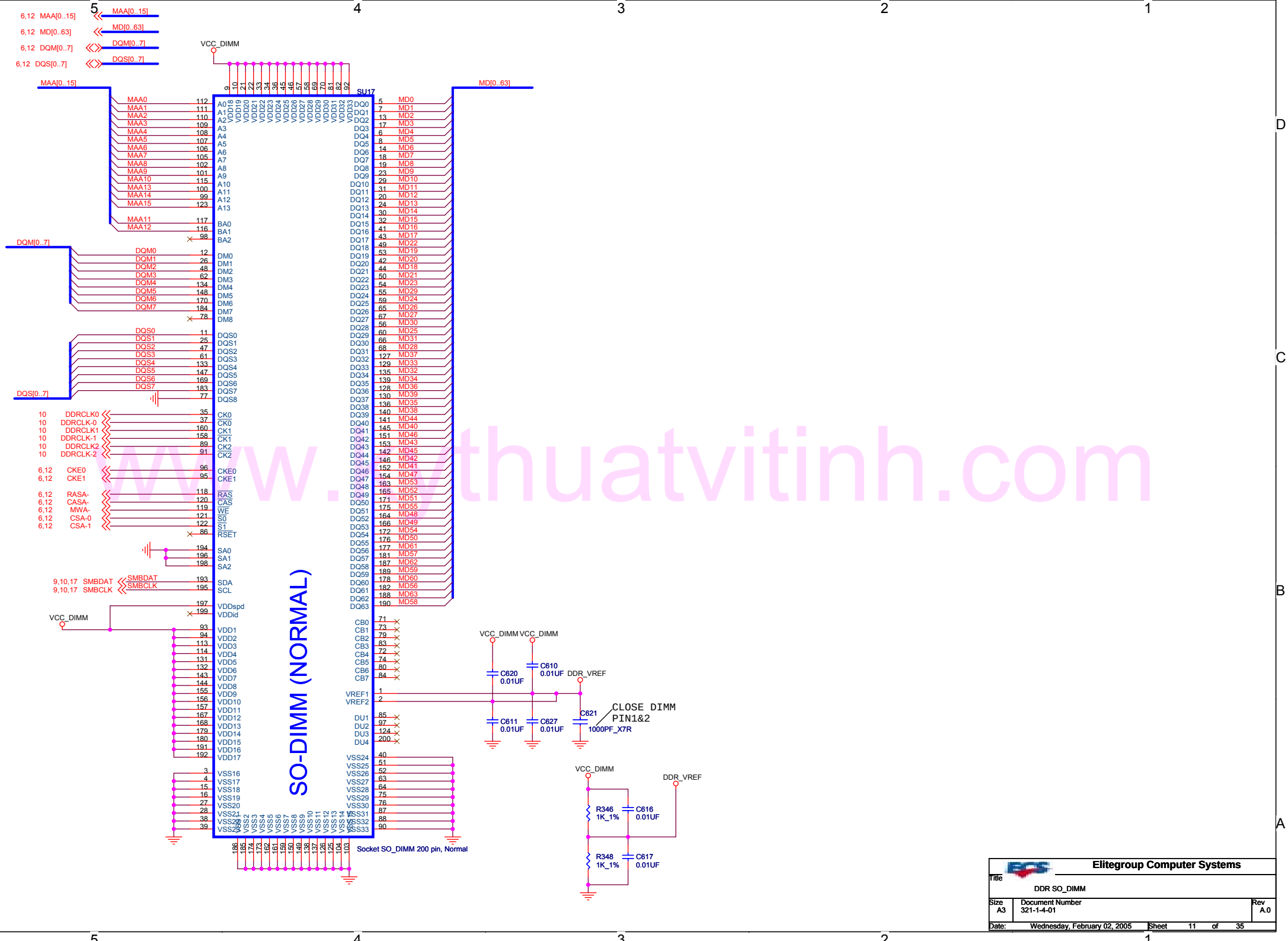

www.thuatvitinh.com

SO-DIMM no "WP" pin

SSTL-2 Termination Resistors

	SDR	Rs	DDR	Rs	Rtt
MD/DQM(/DQS)	LV-CMOS	0/10/-	SSTL-2	10	33
MA/Control	LV-CMOS	10	SSTL-2	0	33
CS	LV-CMOS	0	SSTL-2	0	47
CKE	DD 3.3V		DD 2.5V		

Control signals can NOT be placed within the same RPs as data , strobe , or command signals

6,11 MAA[15..0] — MAA[15..0]
6,11 MD[63..0] — MD[63..0]
6,11 DQM[7..0] — DQM[7..0]
6,11 DQS[7..0] — DQS[7..0]

DDR_VTT

MD4 SRP7 1 8 33X4
MD5 2 7
DQM0 3 6
MD6 4 5
MD0 RP30 1 8 33X4
MD1 2 7
DQS0 3 6
MD2 4 5
MD10 RP32 1 8 33X4
MD11 2 7
MD16 3 6
MD17 4 5
MD7 SRP9 1 8 33X4
MD12 2 7
MD13 3 6
DQM1 4 5
MD3 RP31 1 8 33X4
MD8 2 7
MD9 3 6
DQS1 4 5
DQM2 SRP11 1 8 33X4
MD21 2 7
MD23 3 6
MD30 4 5
MD14 SRP10 1 8 33X4
MD15 2 7
MD20 3 6
MD18 4 5
MD24 RP34 1 8 33X4
DQS3 2 7
MD27 3 6
MD26 4 5
MD25 SRP12 1 8 33X4
DQM3 2 7
MD31 3 6
MD28 4 5
MD22 RP33 1 8 33X4
DQS2 2 7
MD29 3 6
MD19 4 5
MD37 RP39 1 8 33X4
MD33 2 7
DQS4 3 6
MD32 4 5
MD38 SRP17 1 8 33X4
MD45 2 7
MD42 3 6
DQM5 4 5
MD36 SRP16 1 8 33X4
MD39 2 7
DQM4 3 6
MD35 4 5
MD34 RP40 1 8 33X4
MD44 2 7
DQS5 3 6
MD40 4 5
MD46 RP41 1 8 33X4
MD43 2 7
MD52 3 6
MD53 4 5
DQS6 RP47 1 8 33X4
MD51 2 7
MD55 3 6
MD61 4 5
DQM6 SRP19 1 8 33X4
MD54 2 7
MD50 3 6
MD60 4 5
MD41 SRP18 1 8 33X4
MD47 2 7
MD48 3 6
MD49 4 5
MD57 RP42 1 8 33X4
DQS7 2 7
MD59 3 6
MD62 4 5
MD56 SRP20 1 8 33X4
DQM7 2 7
MD63 3 6
MD58 4 5

DDR_VTT

8 1 MAA6
7 2 MAA4
6 3 MAA2
5 4 MAA0
33X4 SRP14

RP36 8 1 33X4 MAA9
7 2
6 3 MAA14
5 4 MAA7

RP37 8 1 33X4 MAA5
7 2 MAA3
6 3 MAA1
5 4 MAA10

8 1
7 2
6 3 MAA13
5 4 MAA8
33X4 SRP13

47X4 8 1 SRP15 MAA12
7 2 RASA- — RASA- 6,11
6 3 CASA- — CASA- 6,11
5 4 CSA-1 — CSA-1 6,11
33X4 8 1 RP38 MAA11
7 2 MWA- — MWA- 6,11
6 3 CSA-0 — CSA-0 6,11
5 4 MAA15 — MAA15 6,11

VCC_DIMM

R156 470_0603 CKE3 6
R173 470_0603 CKE2 6
R299 470_0603 CKE1 6,11
R300 470_0603 CKE0 6,11

DECOUPLING CAPACITOR FOR SSTL-2 END TERMIANTION VTT ISLAND
402 Package placed within 300mils of VTT Termination R-packs

VCC_DIMM

DIMM DECOUPLING ; CLOSE TO DIMM

C542 0.1UF_X7R
C596 0.1UF_X7R
C597 0.1UF_X7R
C598 0.1UF_X7R
C591 0.1UF_X7R
C595 0.1UF_X7R

C543 0.1UF_X7R
C358 0.1UF_X7R
C590 0.1UF_X7R
C592 0.1UF_X7R
C593 0.1UF_X7R
C589 0.1UF_X7R

C594 0.1UF_X7R
C546 0.1UF_X7R
C544 0.1UF_X7R
C547 1000PF_X7R
C537 1000PF_X7R
C545 0.1UF_X7R

VCC_DIMM
C586 10UF/10V_0805
C609 100UF/10V_CASE_B

DDR_VTT

C558 0.1UF_X7R
C554 0.1UF_X7R
C562 0.1UF_X7R
C563 0.1UF_X7R
SC185 0.1UF_X7R
SC184 0.1UF_X7R

SC178 0.1UF_X7R
SC177 0.1UF_X7R
C560 0.1UF_X7R
SC179 0.1UF_X7R
SC187 0.1UF_X7R
C564 0.1UF_X7R

C559 0.1UF_X7R
C570 0.1UF_X7R
SC189 0.1UF_X7R
SC180 0.1UF_X7R
SC186 0.1UF_X7R
SC188 0.1UF_X7R

C569 0.1UF_X7R
SC183 0.1UF_X7R
C566 0.1UF_X7R

C565 0.1UF_X7R
C567 0.1UF_X7R
SC172 0.1UF_X7R
SC173 0.1UF_X7R
SC174 0.1UF_X7R
SC170 0.1UF_X7R

C568 0.1UF_X7R
SC190 0.1UF_X7R
SC176 0.1UF_X7R
C557 0.1UF_X7R
SC181 0.1UF_X7R
C571 0.1UF_X7R

SC182 0.1UF_X7R
C556 0.1UF_X7R
C555 0.1UF_X7R
C572 0.1UF_X7R
SC175 0.1UF_X7R
C561 0.1UF_X7R

DDR_VTT
C526 100UF/10V_CASE_B
SC193 100UF/10V_CASE_B

every 2 "RPs" put 3 CAPs

0.1UF X 39 pcs

www.kythuatvitinh.com

Elitegroup Computer Systems	
Title	DDR TERMINATION & DECOUPLING
Size B	Document Number 321-1-4-01 — Rev A.0
Date: Wednesday, February 02, 2005	Sheet 12 of 35

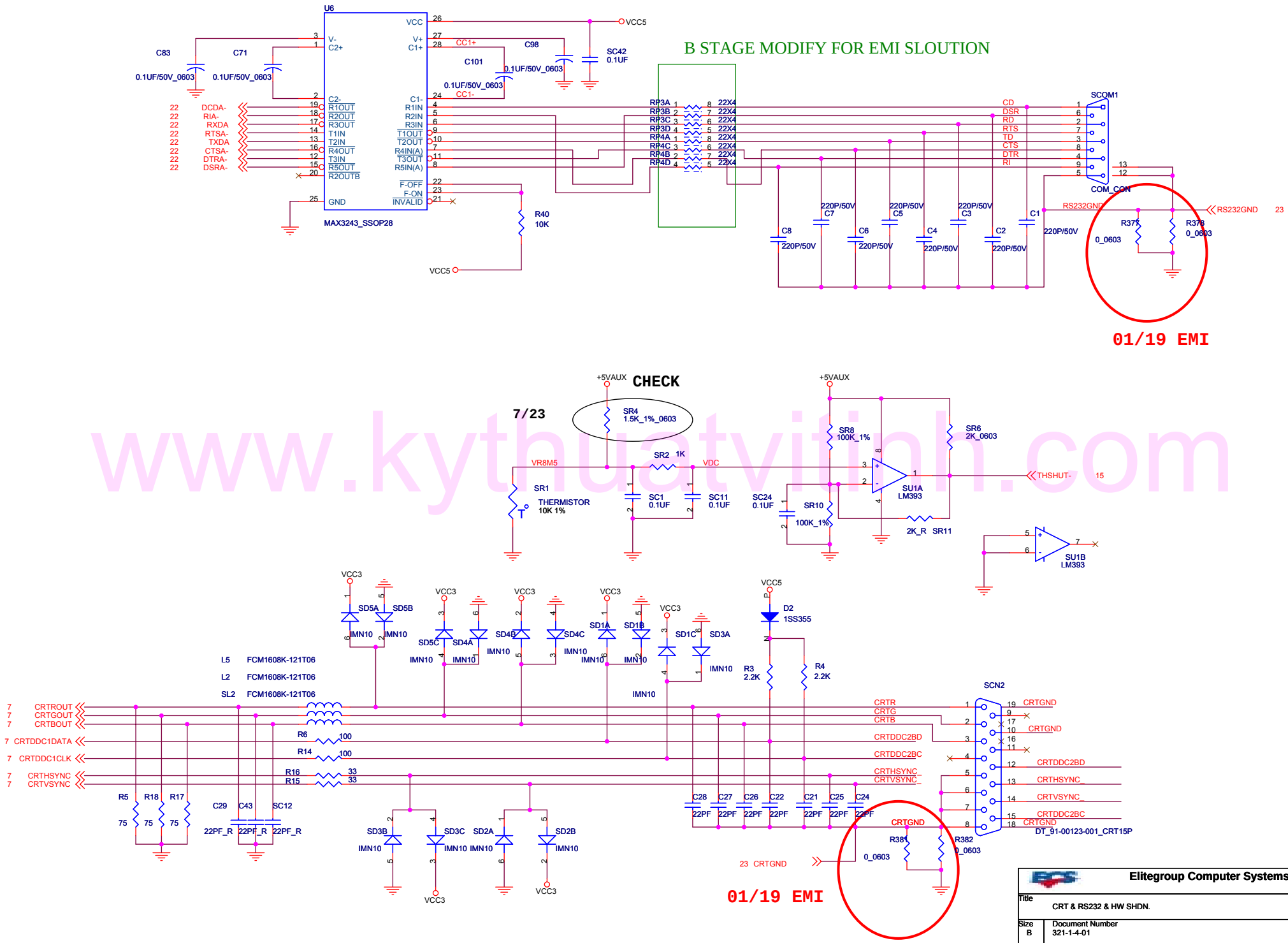

www.kythuatvitinh.com

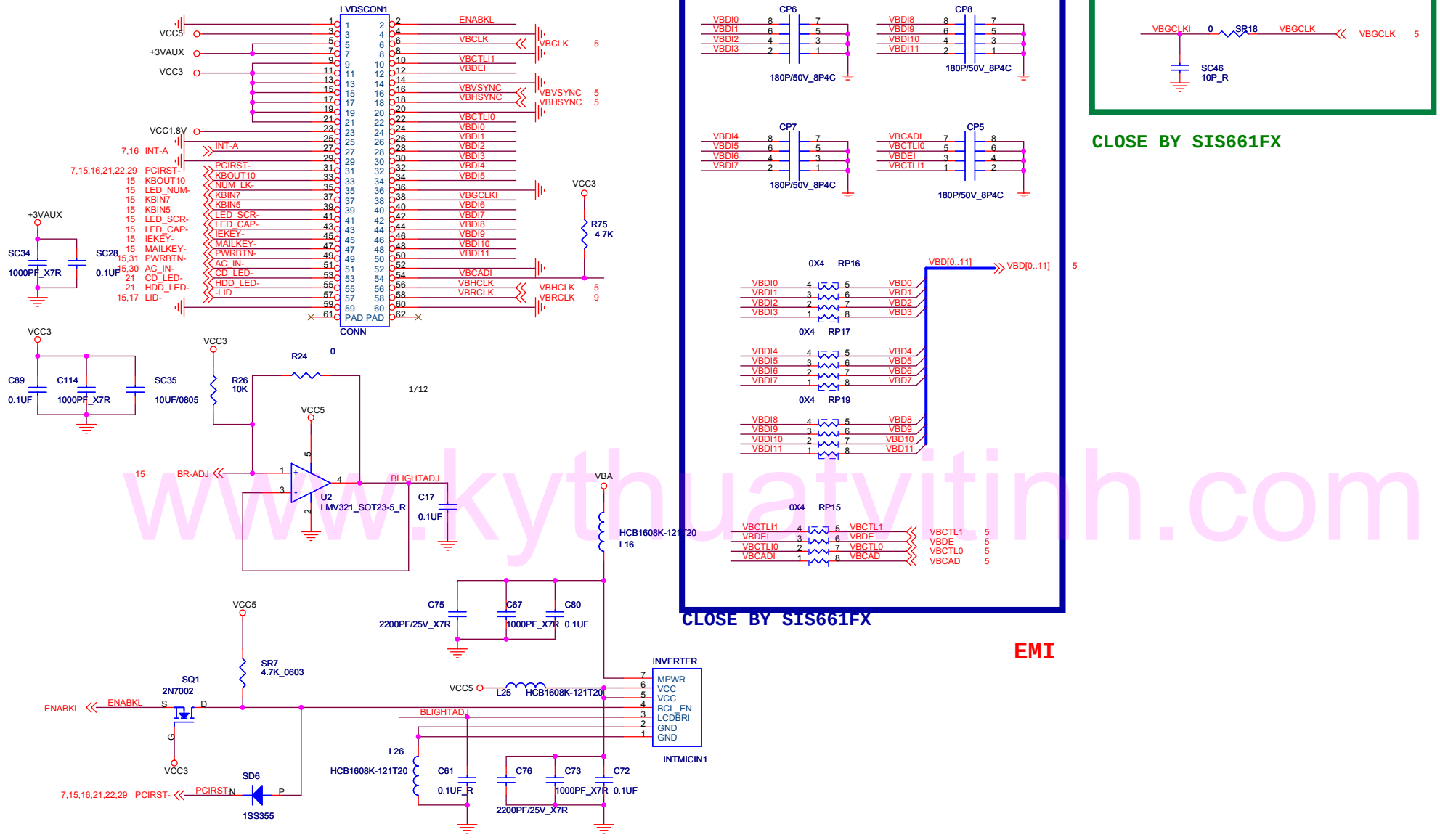

www.kythuatvitinh.com

Elitegroup Computer Systems			
Title: LCD/TV CONN.			
Size: A3	Document Number: 321-1-4-01		Rev: A.0
Date: Wednesday, February 02, 2005	Sheet 14 of 35		

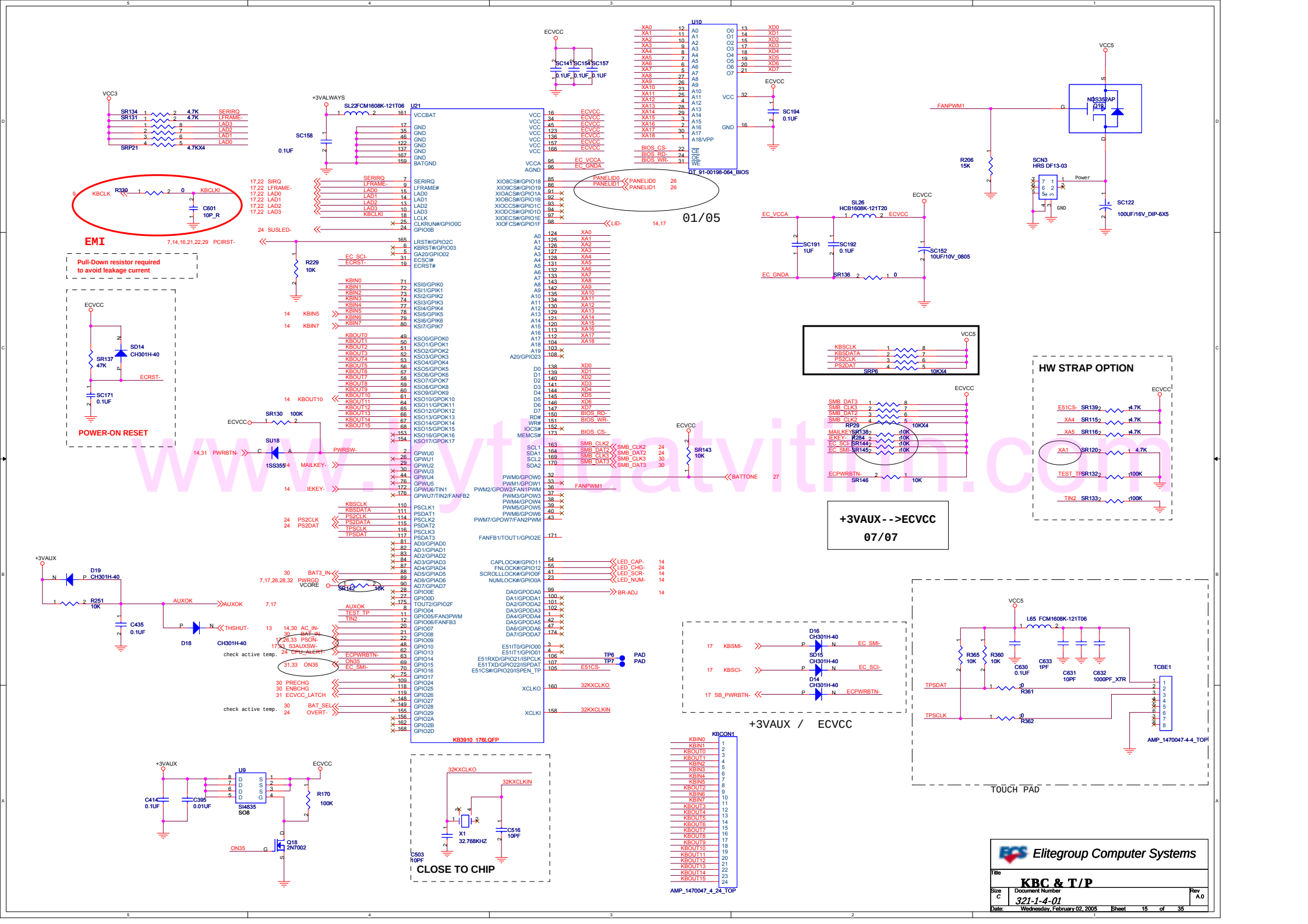

www.bytbdatvitinh.com

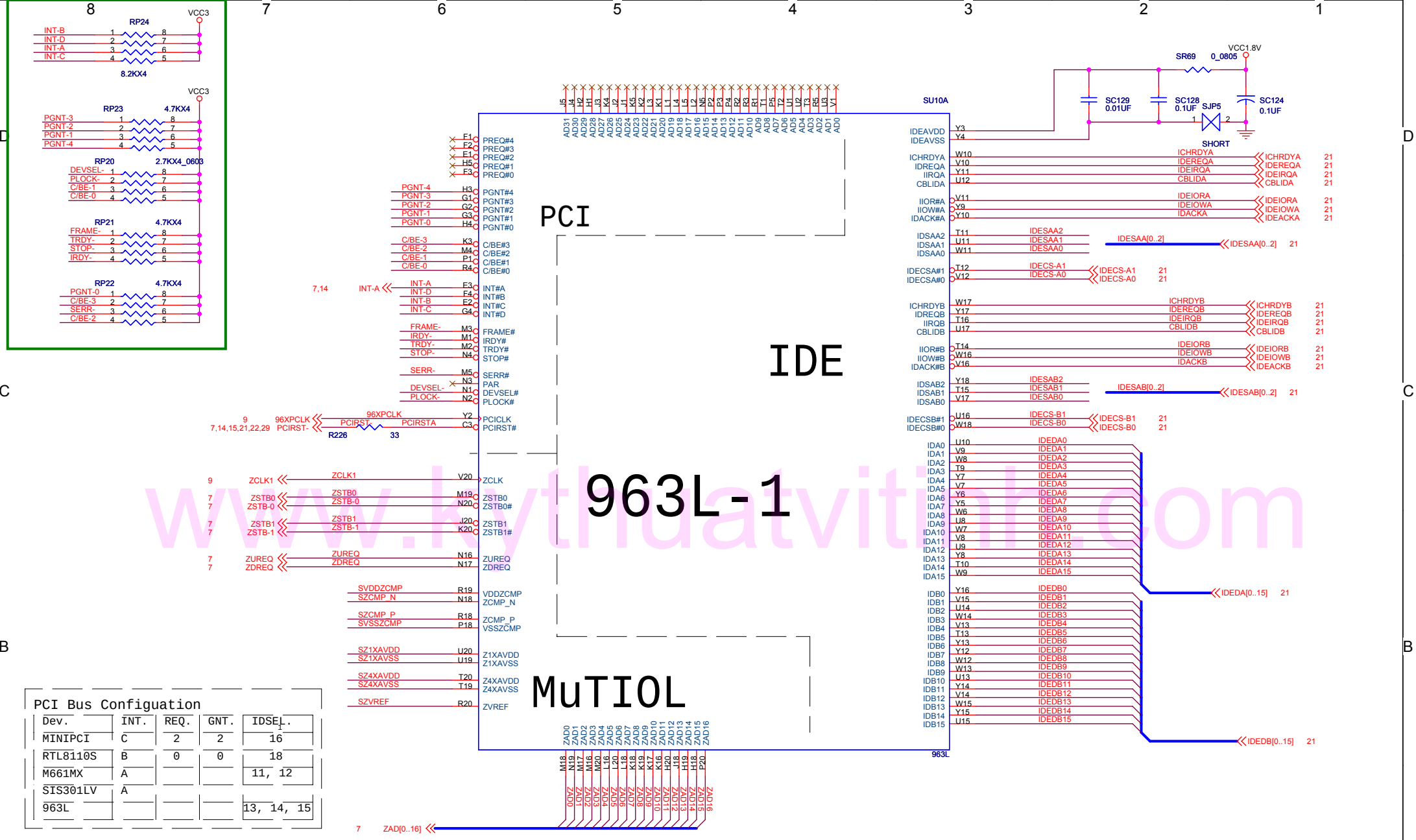

www.kythuatvitinh.com

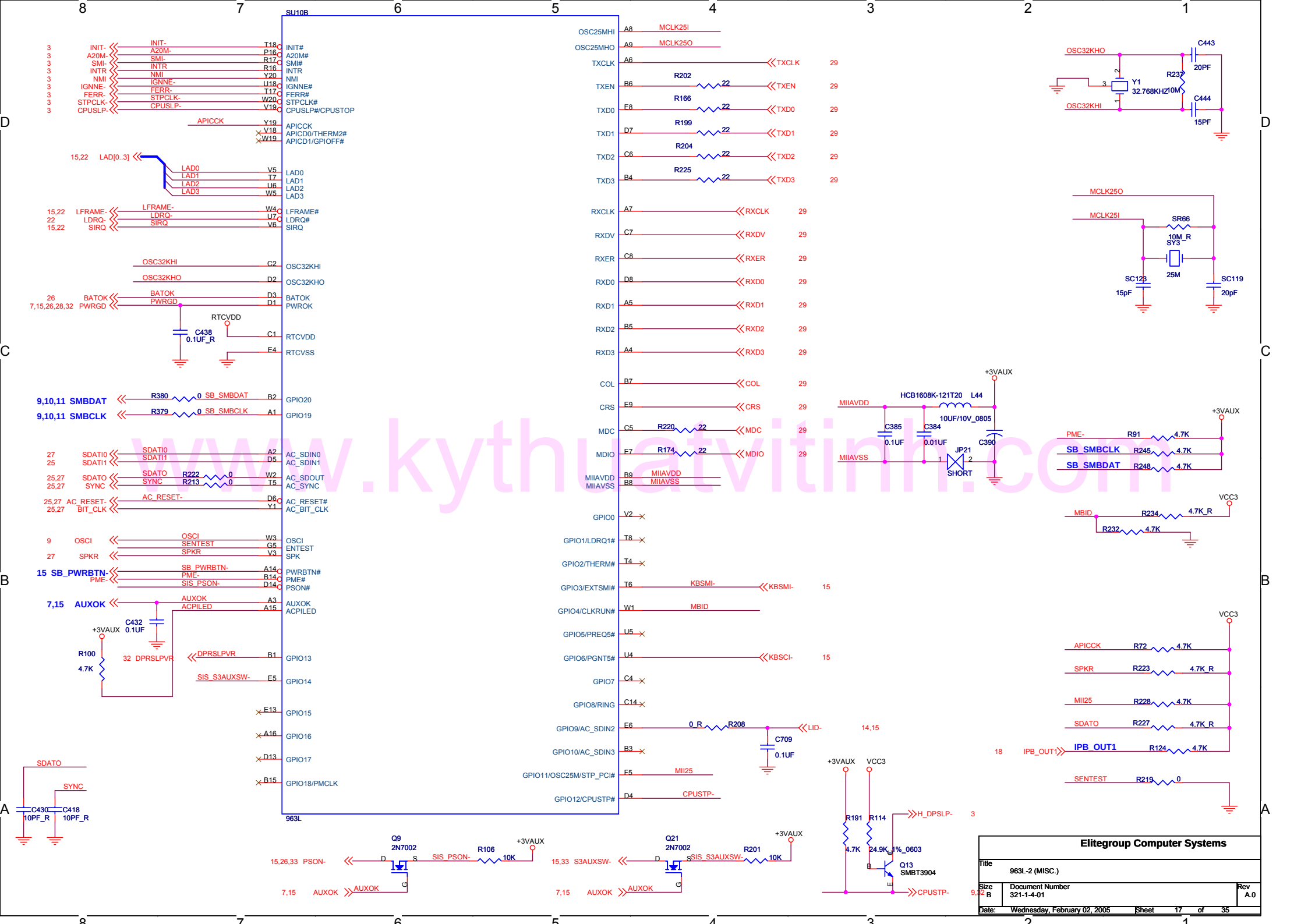

www.kythuatvitinh.com

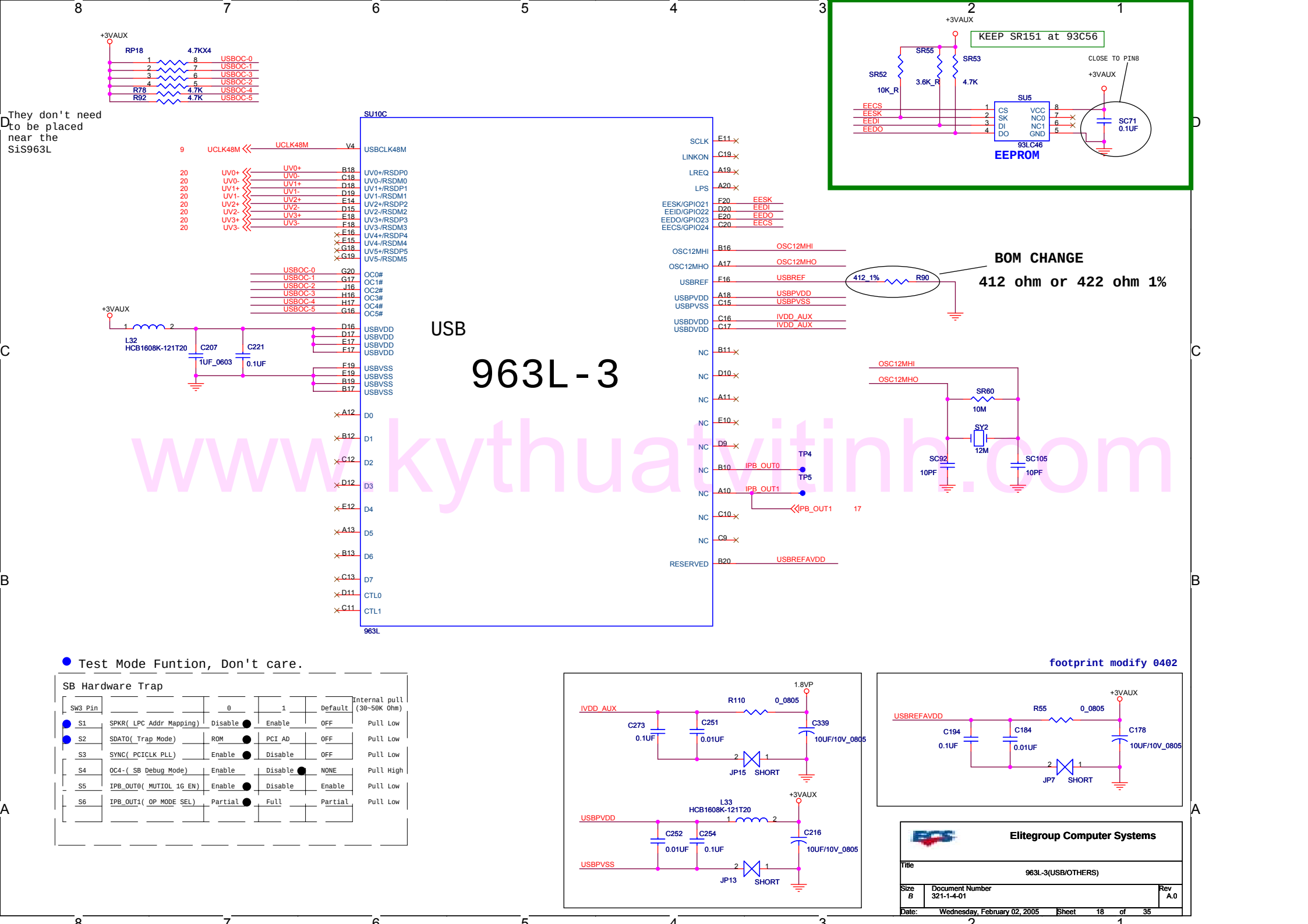

www.kythuatvitinh.com

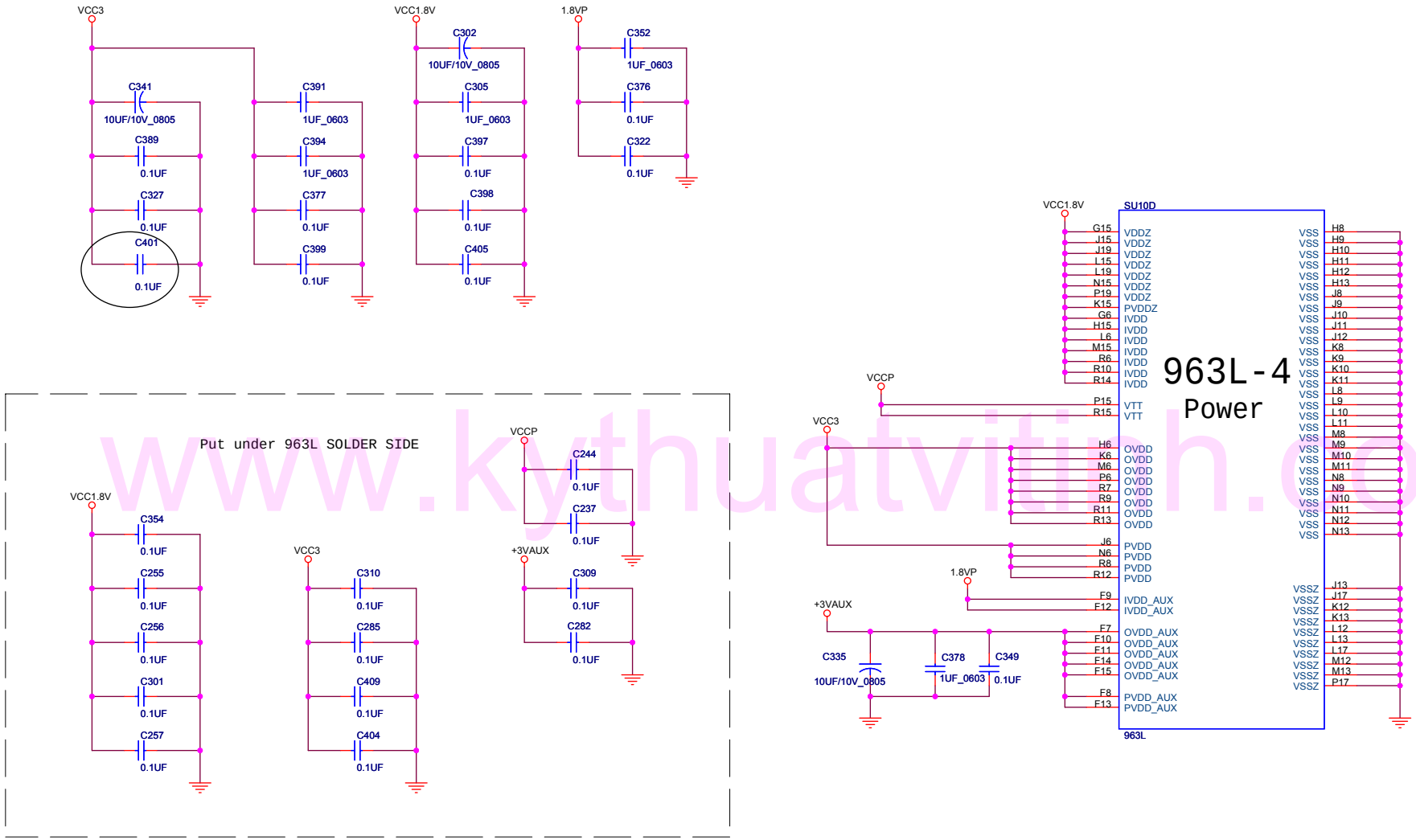

www.kythuatvitinh.com

footprint modify 0402

Elitegroup Computer Systems

Title	963L-4 (Powers)	
Size B	Document Number 321-1-4-01	Rev A.0
Date: Wednesday, February 02, 2005	Sheet 19 of 35	

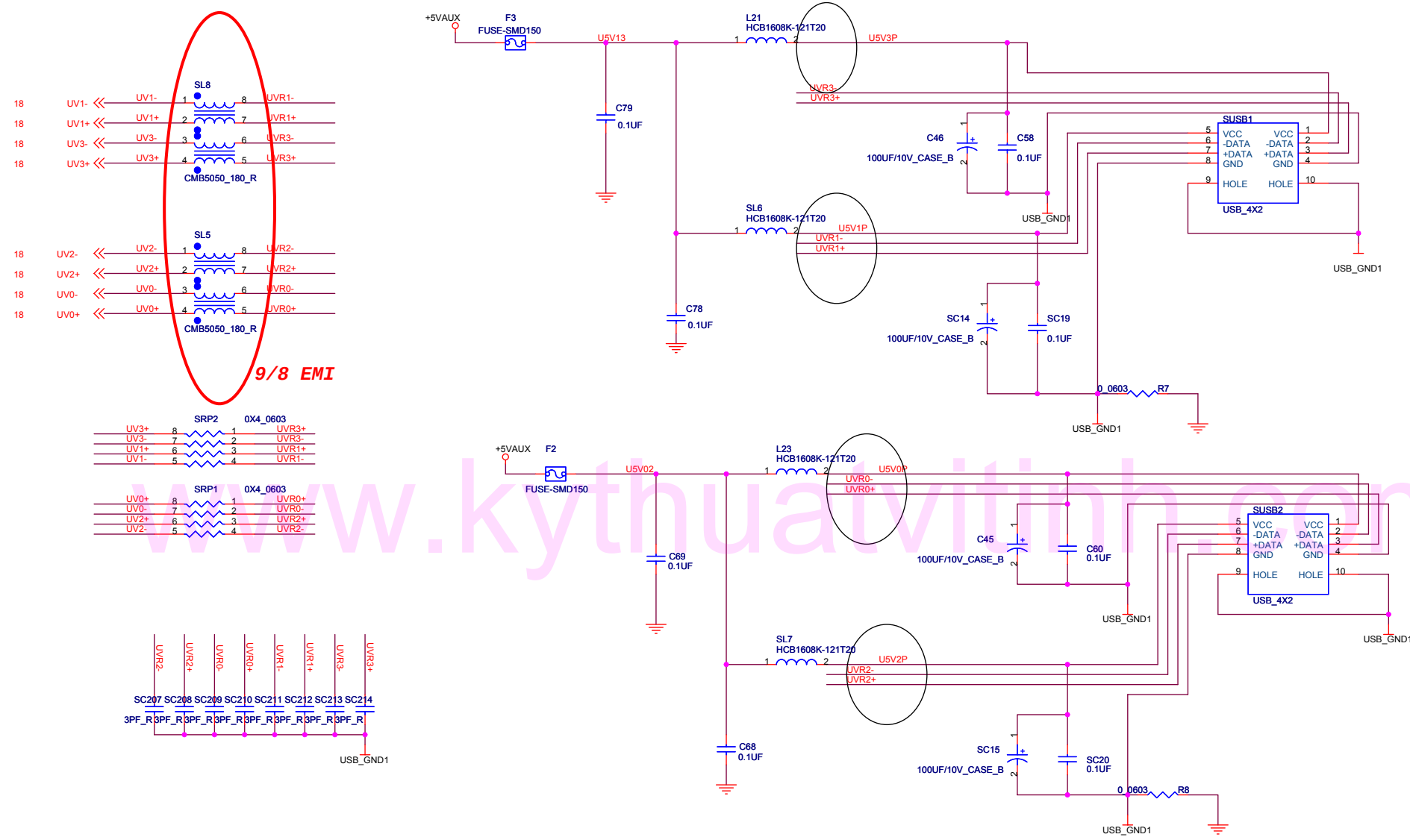

www.kythuatvitinh.com

ALL THESE CLOSE TO CONNECTOR

footprint modify 0402

Elitegroup Computer Systems

Title: USB PORT

Size	Document Number	Rev
B	321-1-4-01	A.0

Date: Wednesday, February 02, 2005 Sheet 20 of 35

Place the damping resistors for IDEA[2:0][A:B], IDECS[1:0][A:B], IDEIOR[A:B]#, IDEIOW[A:B]#, and IDACK[A:B]# near SiS962L
The length must be less than 1 inch

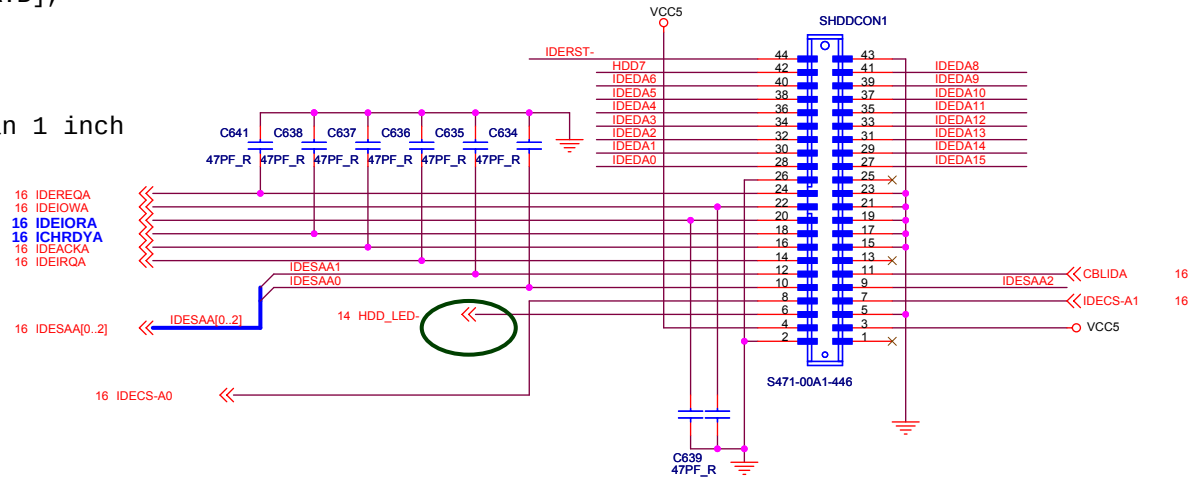

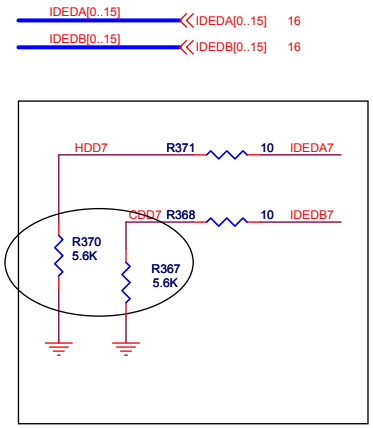

2/26

CLOSE TO HDD CONN.

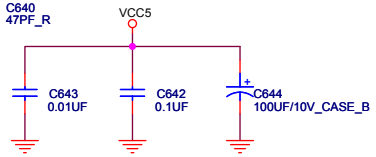

CLOSE TO HDD

Place the damping resistors for IDED[15:0][A:B], IDREQ[A:B], ICHRDY[A:B], and IDEIRQ[A:B] near IDE connectors
The length must be less than 4 inches

www.kythuatvitinh.com

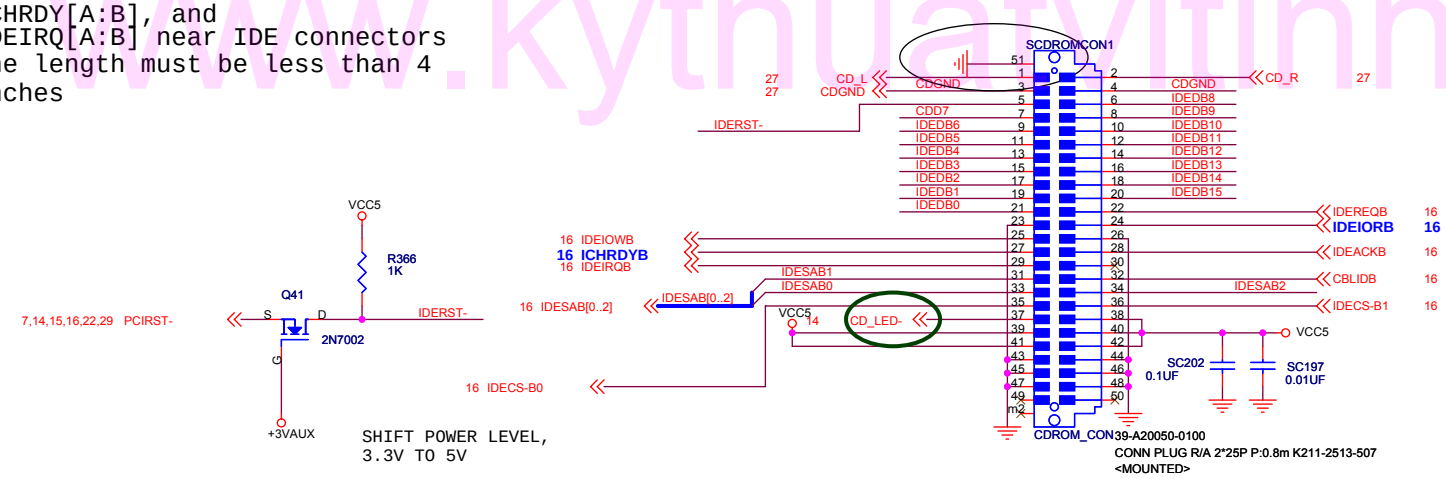

SHIFT POWER LEVEL, 3.3V TO 5V

CSEL : "NC" ; "Hi" --> Master(CDROM)/Slave(DVDROM)

CSEL : "Low --> Slave(CDROM)/Master(DVDROM)

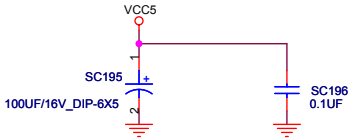

CLOSE TO CDROM/DVDROM

footprint modify 0402

Elitegroup Computer Systems		
Title: HDD & CDROM CONN.		
Size: B	Document Number: 321-1-4-01	Rev: A.0
Date: Wednesday, February 02, 2005	Sheet 21 of 35	

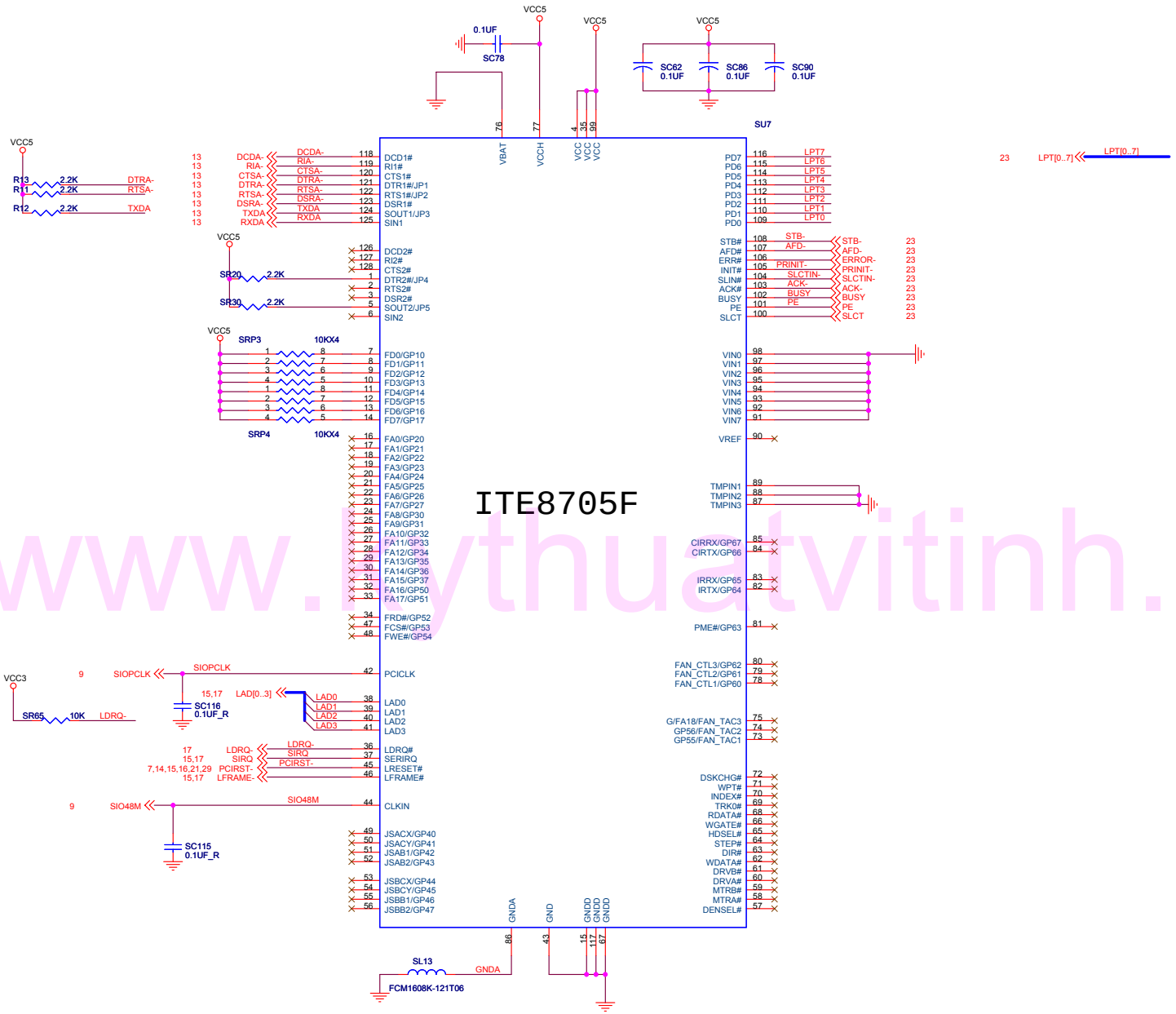

www.kythuatvitinh.com

Elitegroup Computer Systems	
Title	ITE 8705F
Size B	Document Number 321-1-4-01 — Rev A.0
Date: Wednesday, February 02, 2005	Sheet 22 of 35

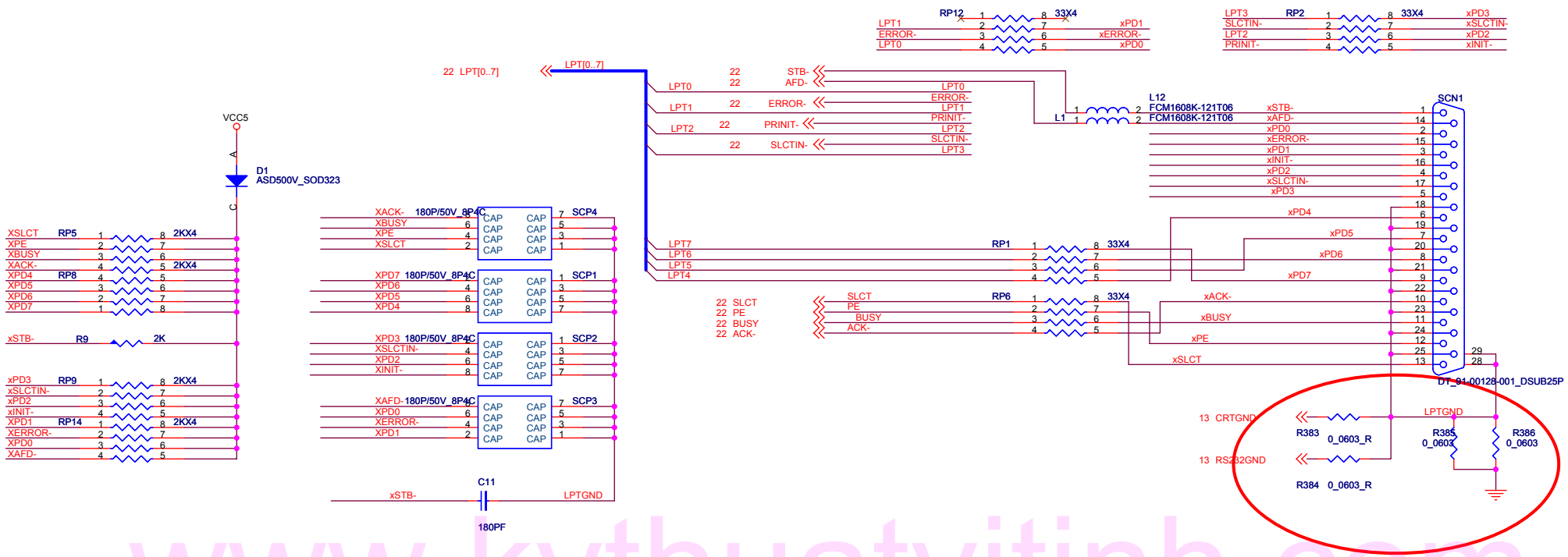

www.kythuatvitinh.com

01/19 EMI

CPU SIDE

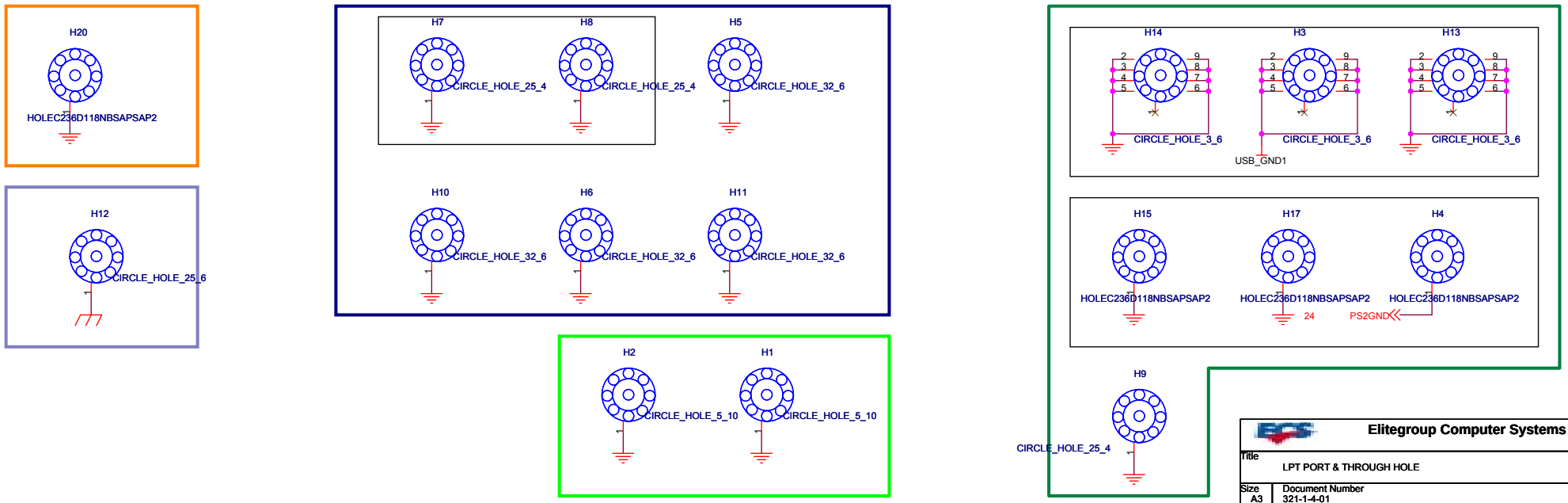

Elitegroup Computer Systems		
Title: LPT PORT & THROUGH HOLE		
Size: A3	Document Number: 321-1-4-01	Rev: A.0
Date: Wednesday, February 02, 2005	Sheet 23 of 35	

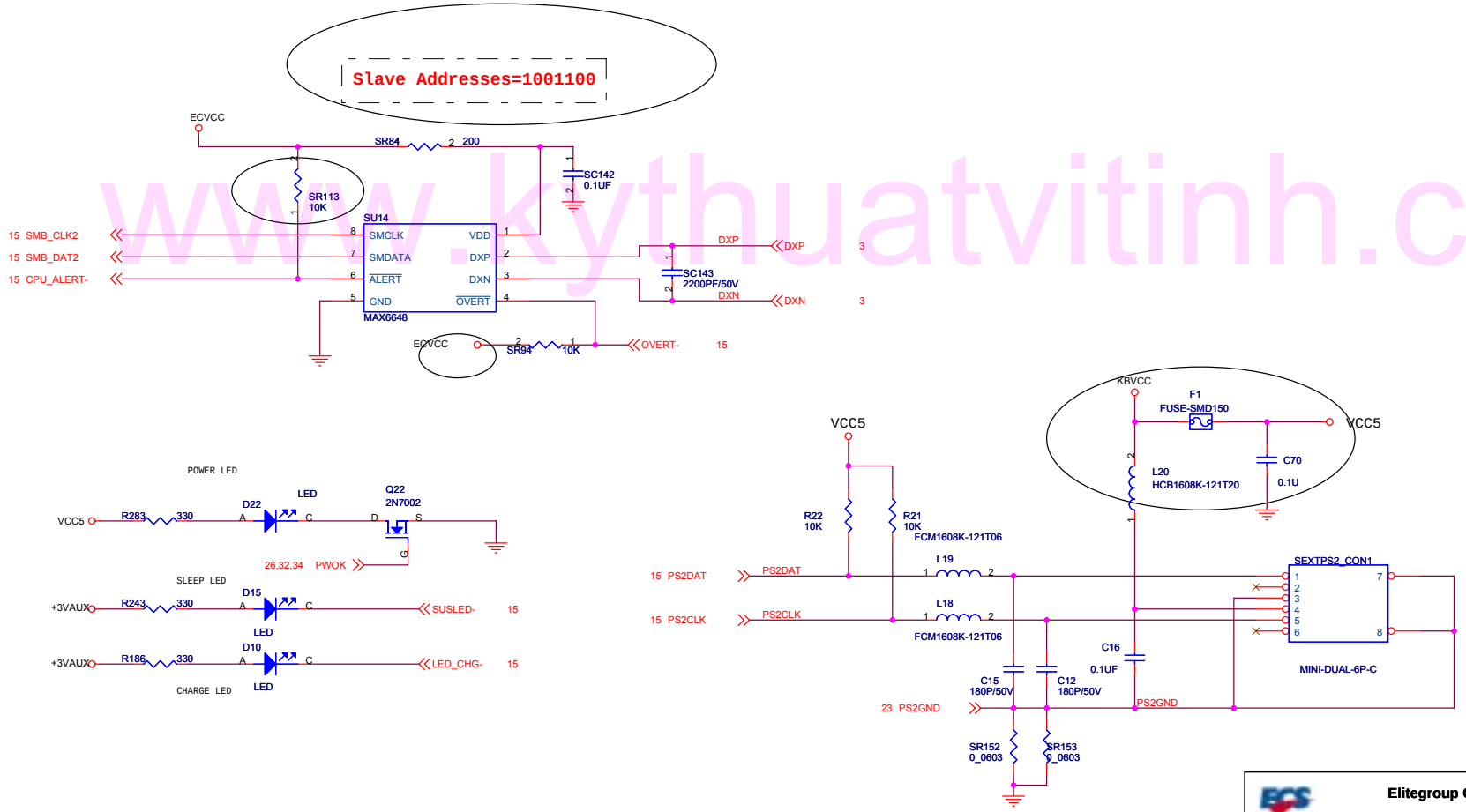

www.kythuatvitinh.com

Elitegroup Computer Systems			
Title	LED & LID & PS2		
Size B	Document Number	321-1-4-01	Rev A.0
Date: Wednesday, February 02, 2005	Sheet 24 of 35		

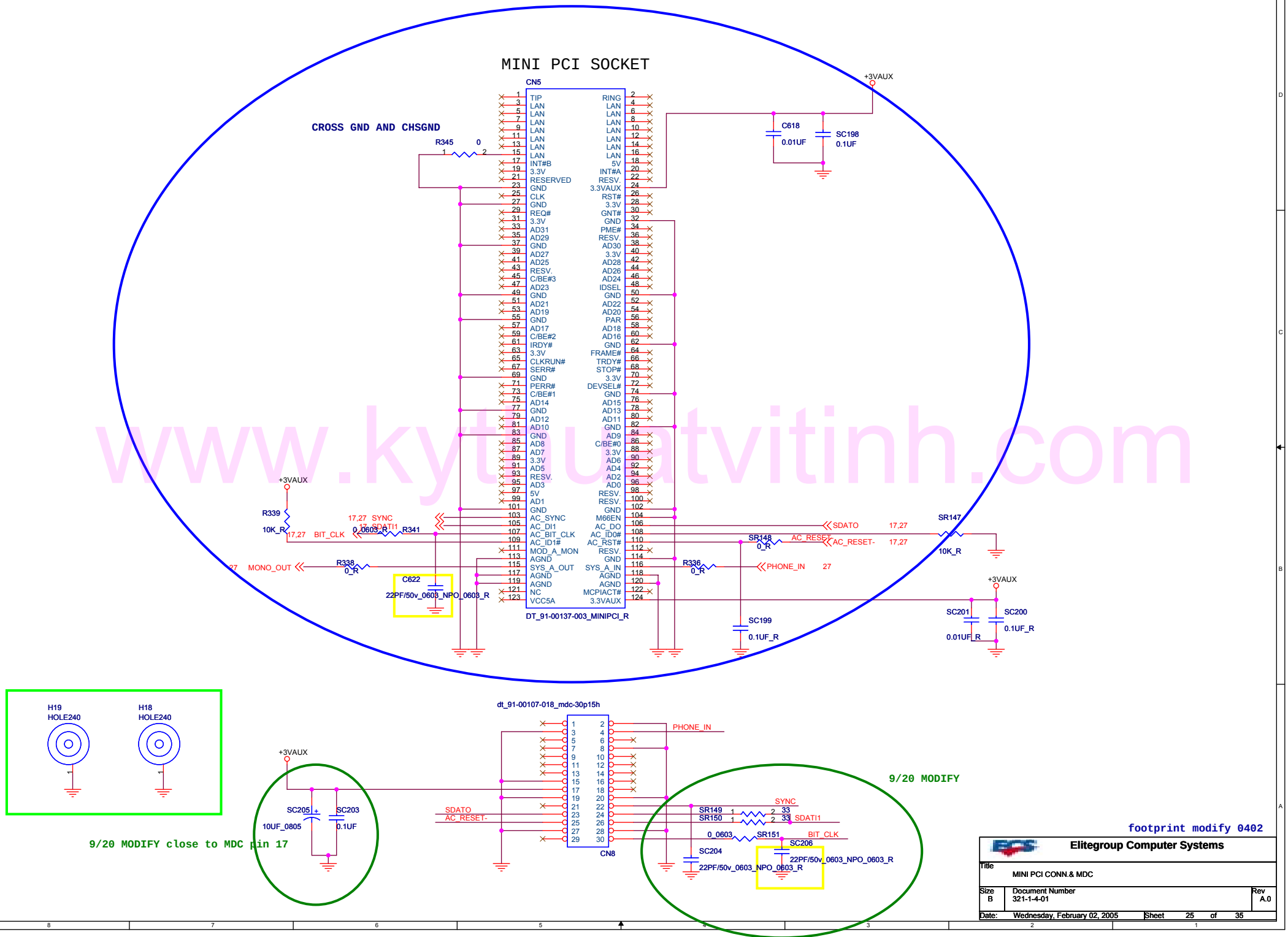

www.kythuatvitinh.com

RTC

NOTE!
1.The RTCVDD is 3V
2.Decoupling capacitor must be close to 963L RTCVDD pin.
3.RTC circuit must strictly follow SiS's recommended design
SiS is not responsible for RTC problems from foreign designs.

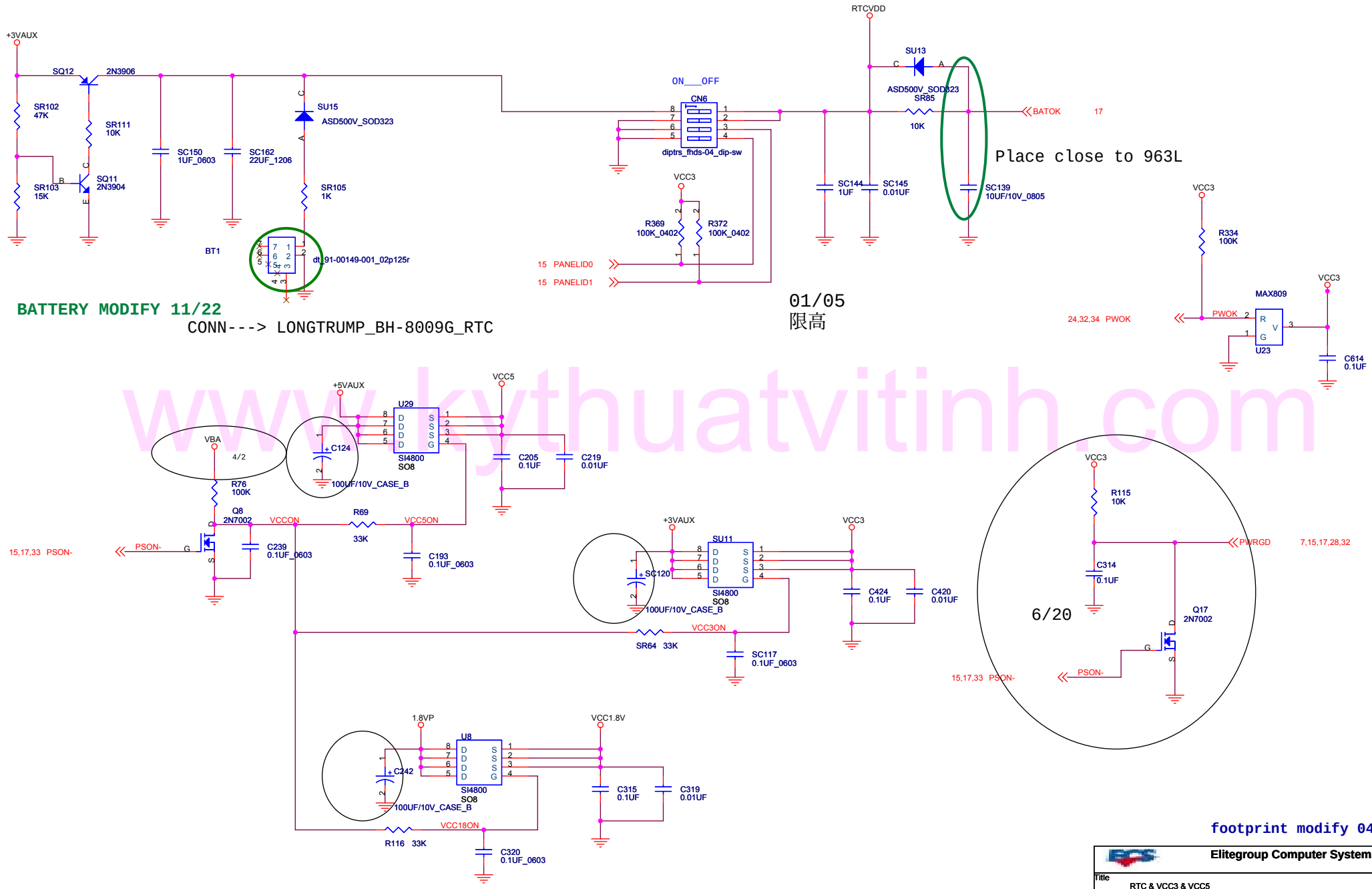

www.kythuatvitinh.com

Elitegroup Computer Systems	
Title	RTC & VCC3 & VCC5
Size B	Document Number 321-1-4-01
Rev	A.0
Date: Wednesday, February 02, 2005	Sheet 26 of 35

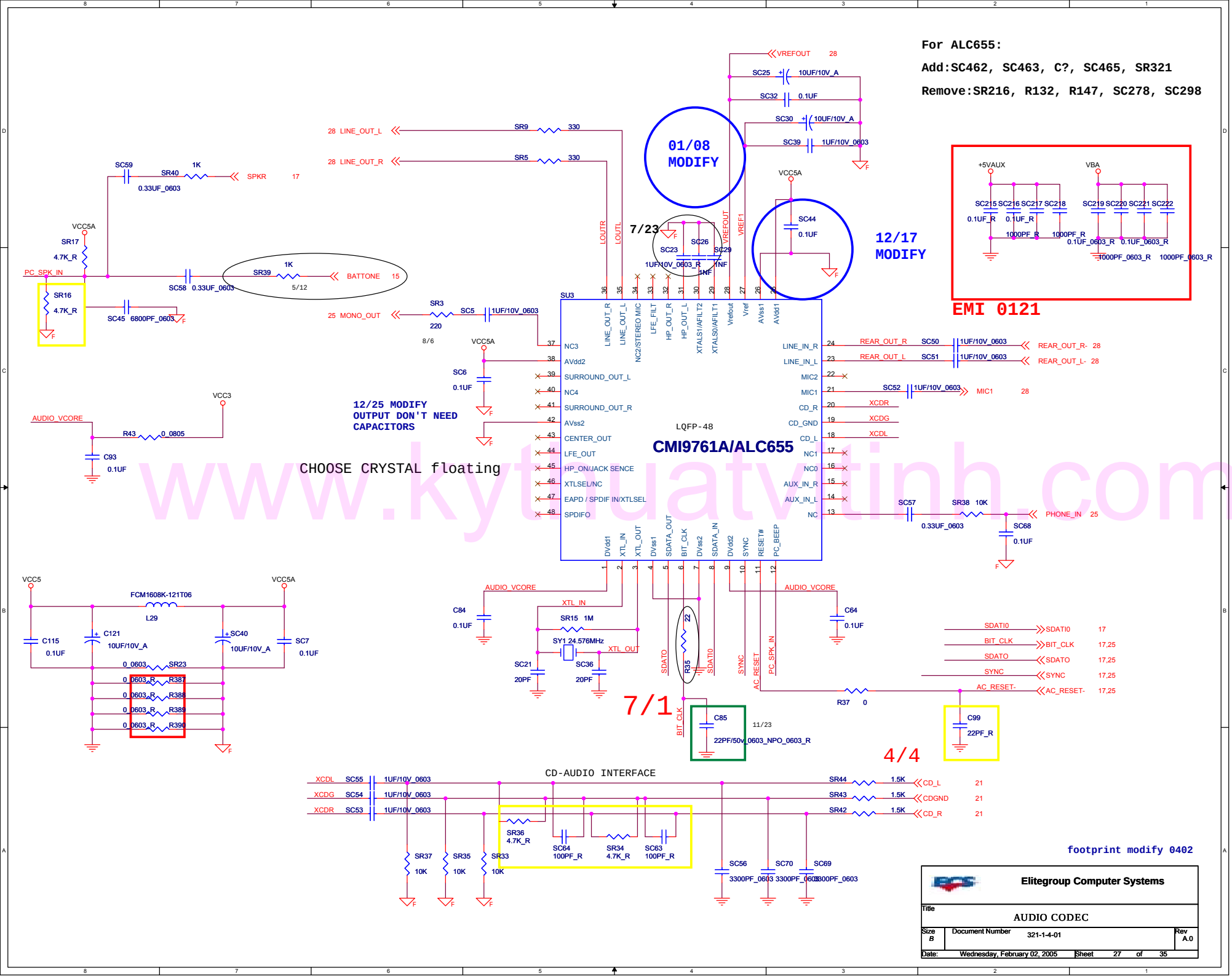

www.kythuatvtinh.com

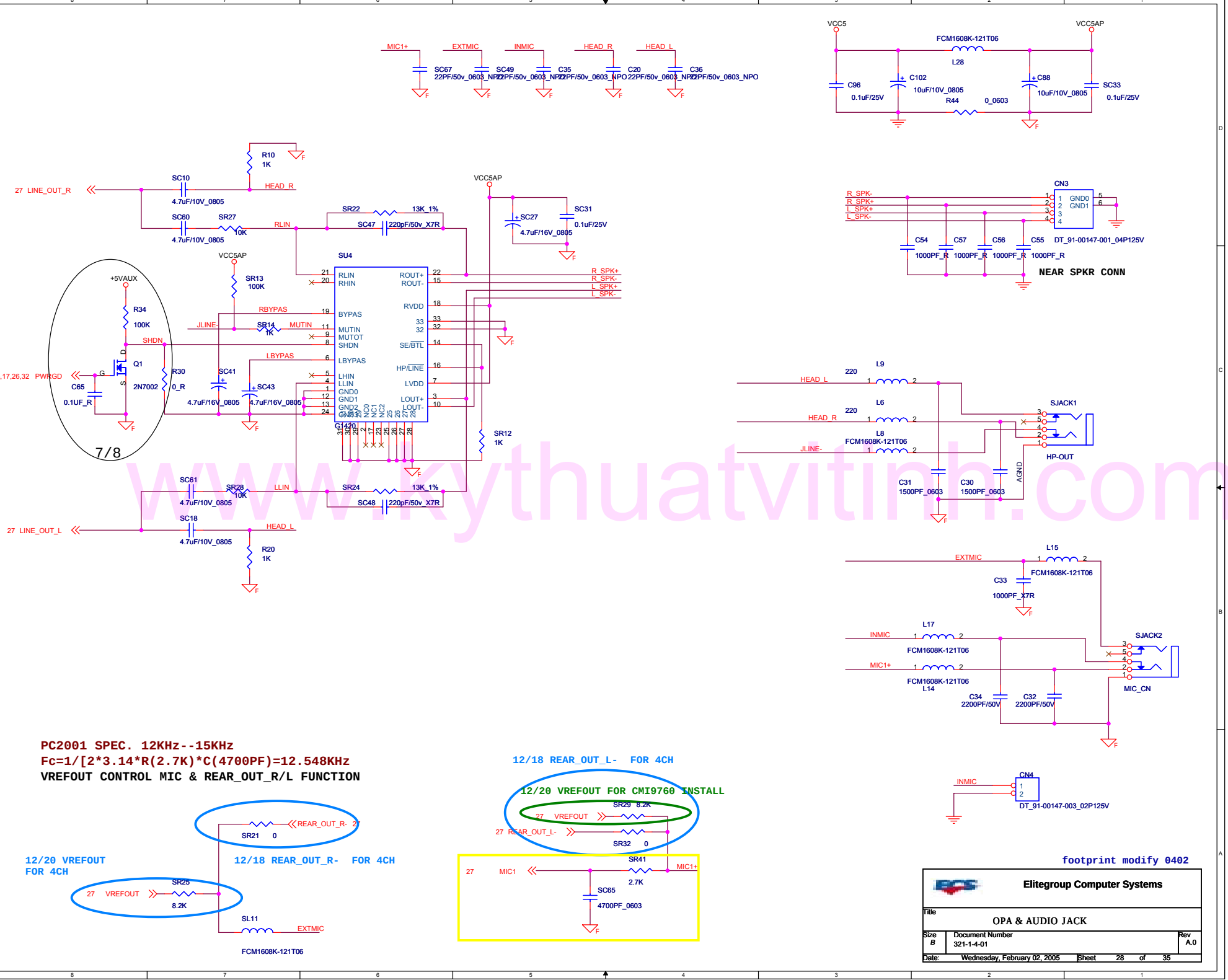

www.kythuatvitinh.com

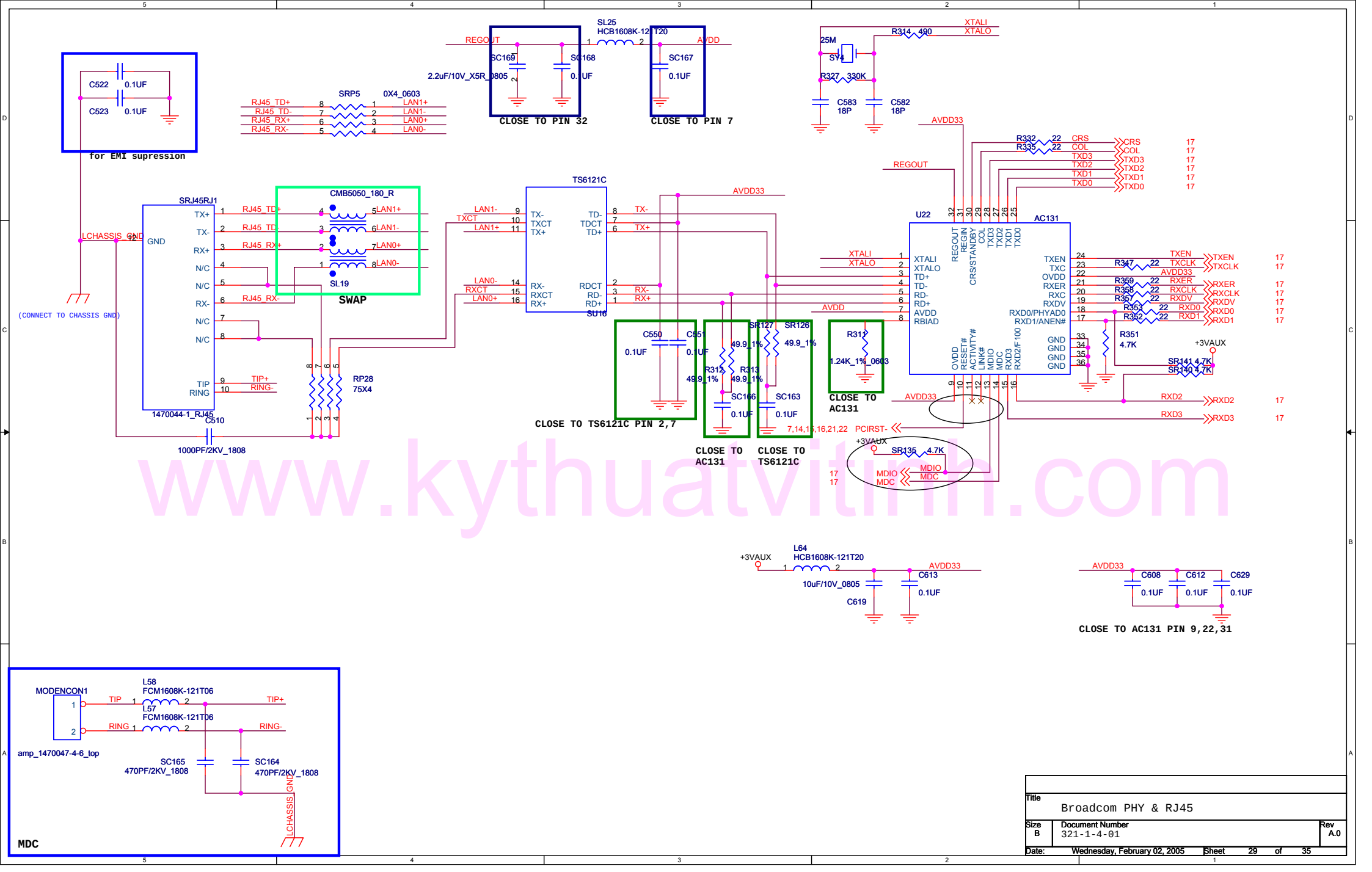

www.kythuatvitinh.com

Title	Broadcom PHY & RJ45
Size B	Document Number 321-1-4-01
Rev	A.0
Date:	Wednesday, February 02, 2005
Sheet	29 of 35

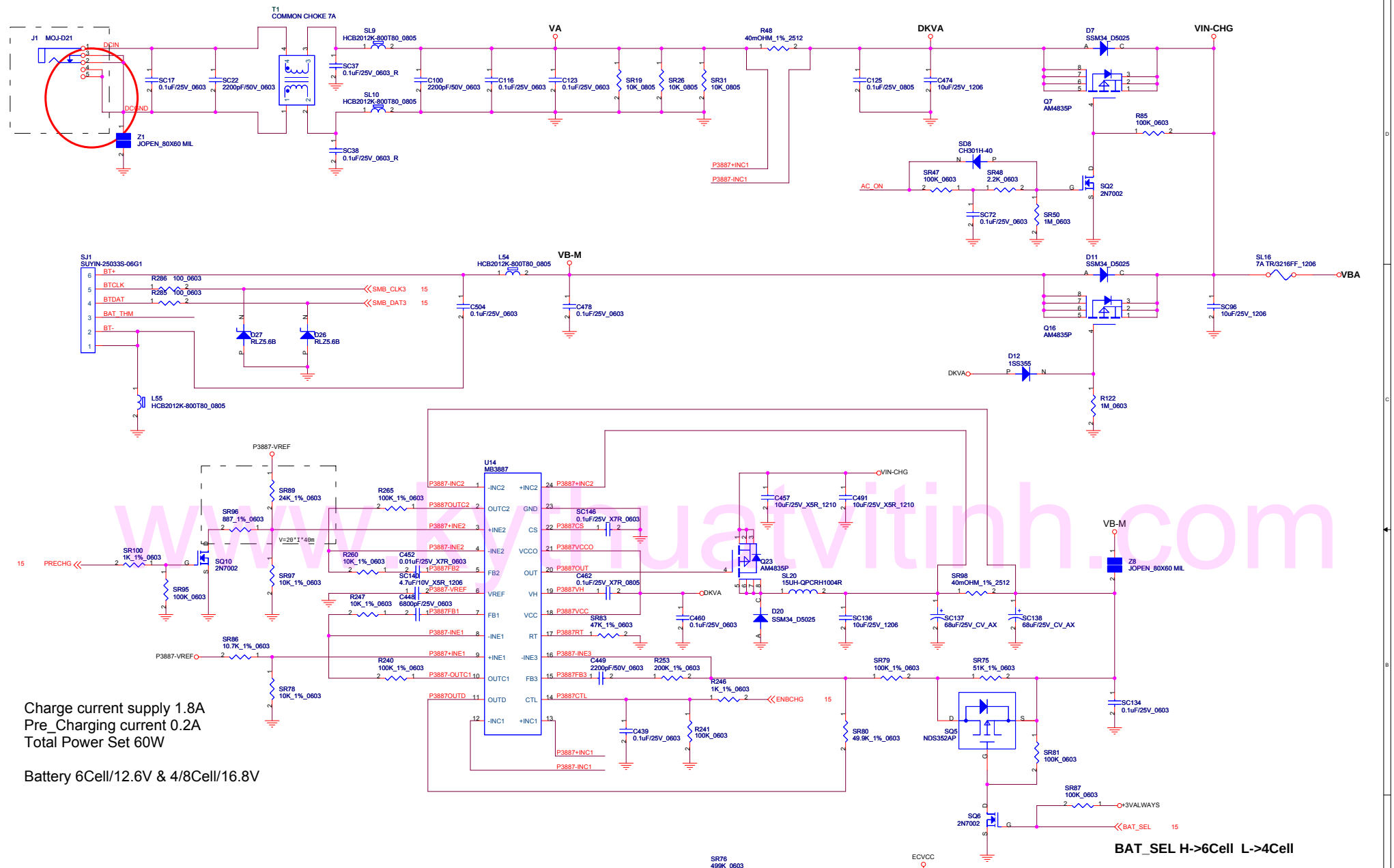

www.kythuatvitinh.com

ELITEGROUP

Title	DC_IN / SELECT / CHARGER	
Size C	Document Number 321-1-4-01	Rev A.0
Date: Wednesday, February 02, 2005	Sheet 30 of 35	

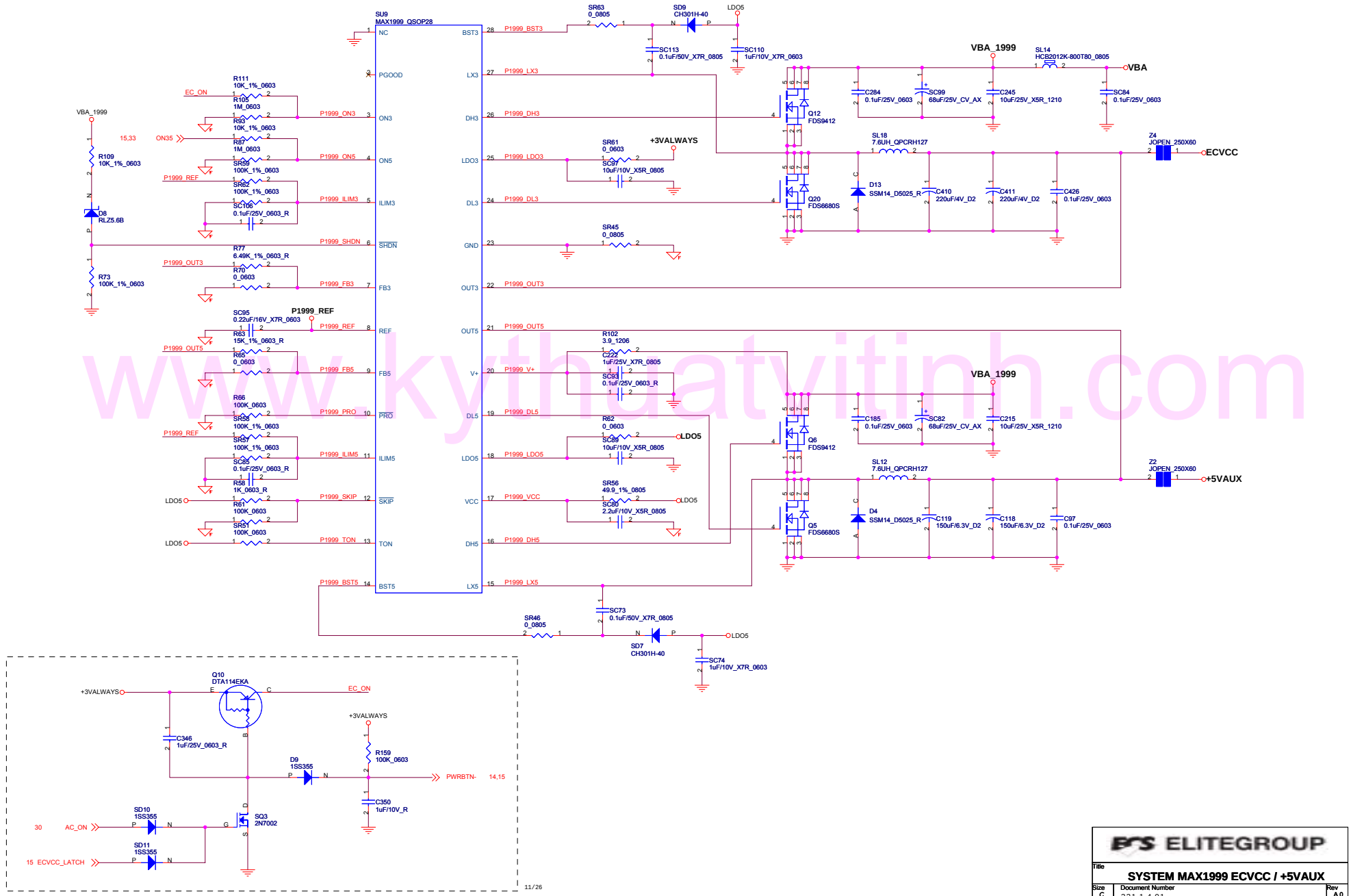

www.kythuatvitinh.com

ELITEGROUP

Title: SYSTEM MAX1999 ECVCC / +5VAUX

Size	Document Number	Rev
C	321-1-4-01	A.0

Date: Wednesday, February 02, 2005 Sheet 31 of 35

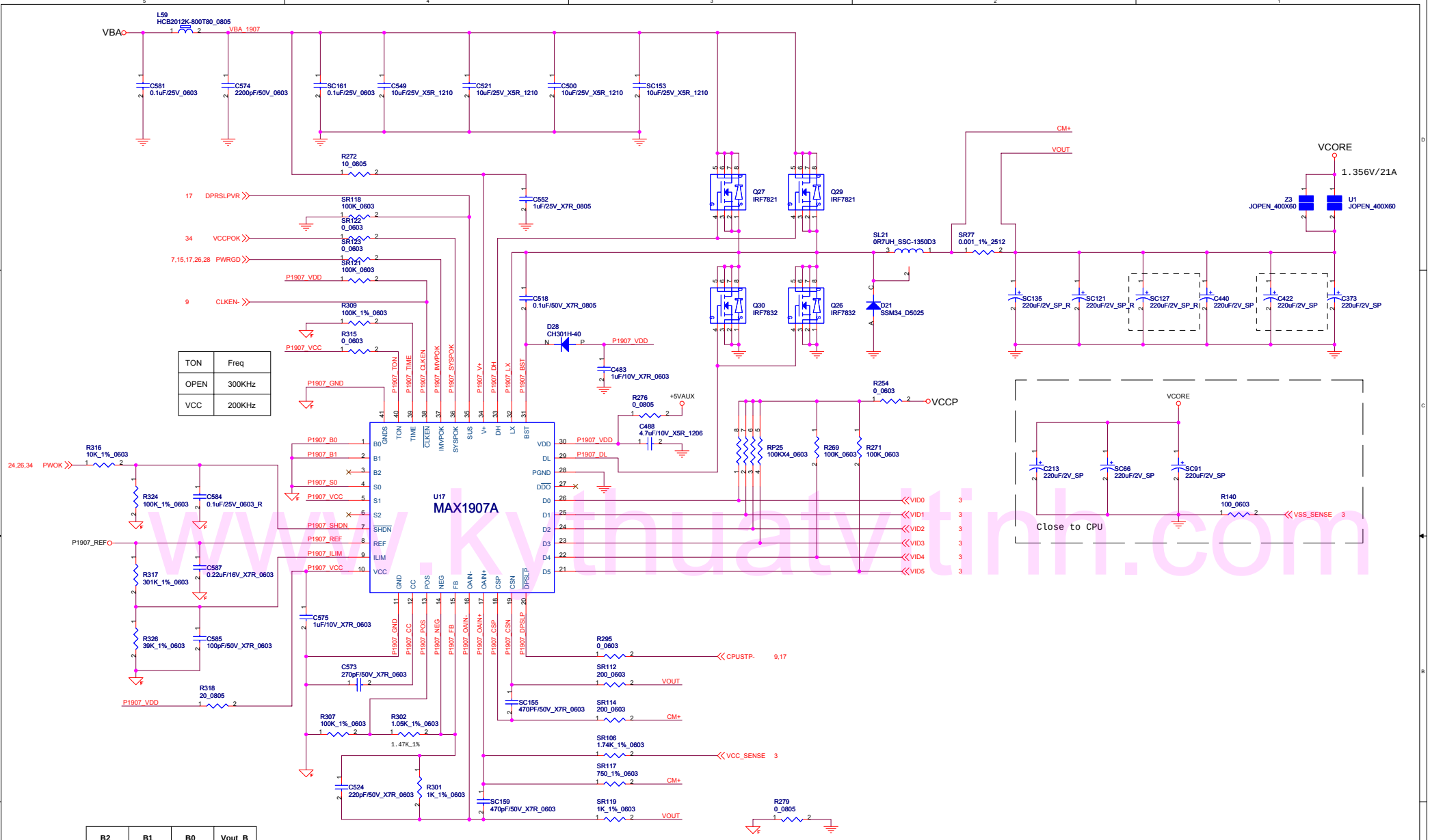

TON	Freq
OPEN	300KHz
VCC	200KHz

B2	B1	B0	Vout_B
REF	VCC	VCC	1.212
OPEN	***GND***	***GND***	***1.196***
OPEN	GND	REF	1.180

S2	S1	S0	Vout_S
OPEN	OPEN	VCC	0.764
OPEN	***VCC***	***GND***	***0.748***
OPEN	VCC	REF	0.732

ELITEGROUP

Title: MAX1907A_VCORE

Size: C | Document Number: 321-1-4-01 | Rev: A.0

Date: Wednesday, February 02, 2005 | Sheet 32 of 35

www.kythuatvtinh.com

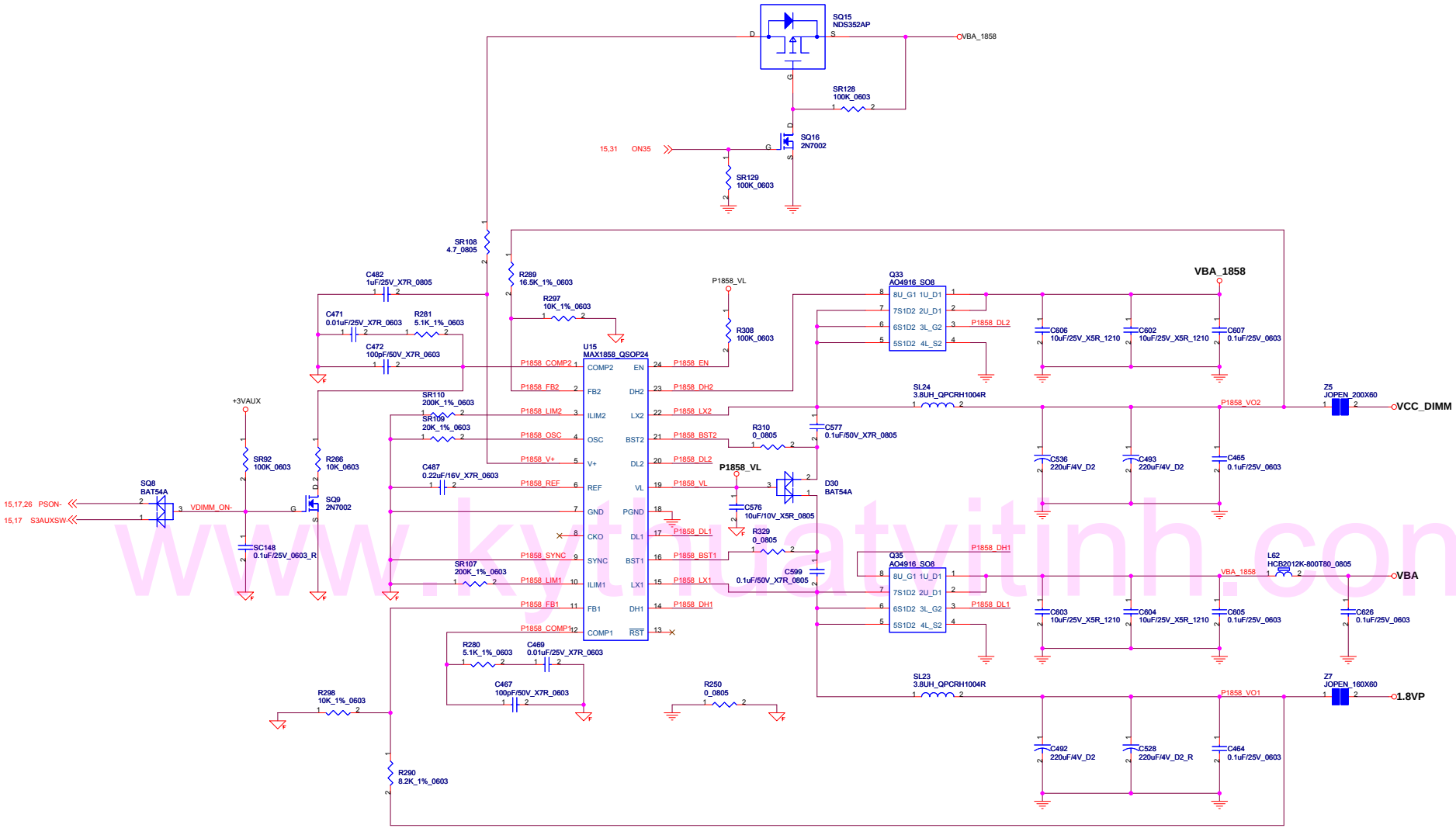

www.kythuatvitinh.com

ELITEGROUP

Title: SYSTEM MAX1858 1.8VP/ VCC_DIMM

Size: C | Document Number: 321-1-4-01 | Rev: A.0

Date: Wednesday, February 02, 2005 | Sheet 33 of 35

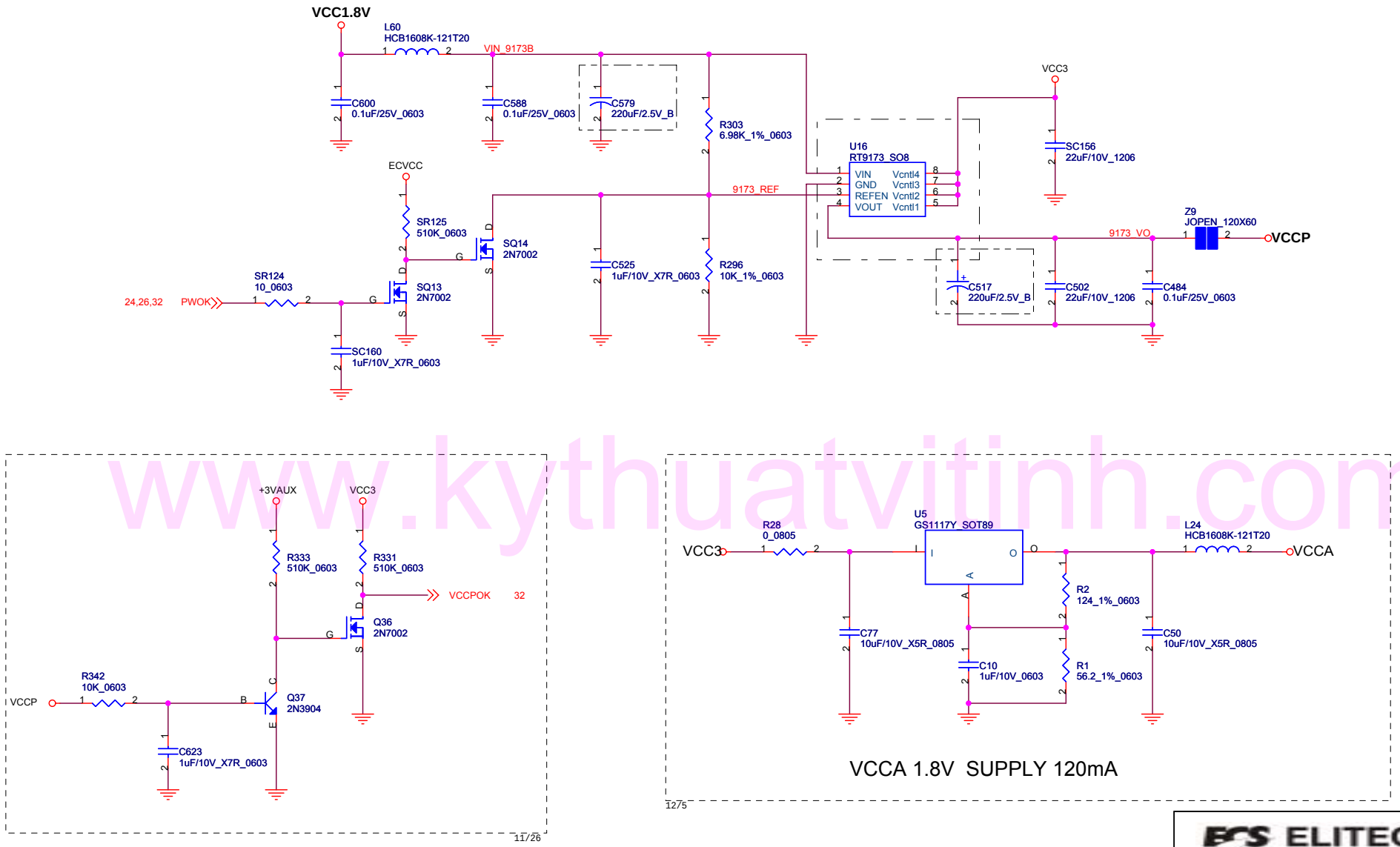

www.kythuatvitinh.com

ELITEGROUP

Title	VCCP / VCCPOK / VCCA
Size B	Document Number 321-1-4-01
Rev	A.0
Date:	Wednesday, February 02, 2005
Sheet	34 of 35

A.0: 2005/1/25 Initial Release 15-F61-010010

www.kythuatvitinh.com

Elitegroup Computer Systems			
Title	HISTORY		
Size A	Document Number	321-1-4-01	Rev A.0
Date:	Tuesday, February 01, 2005	Sheet 35 of 35	