# 532 SCHEMATICS

**REV. : 2.0**

## Table of Contents


01 Table of Contents
02 Revision History
03 EFFICEON DDR Interface
04 EFFICEON AGP Interface
05 EFFICEON HT Interface
06 EFFICEON Core Power
07 EFFICEON 2.5 & 3.3V Pwr
08 EFFICEON 1.2 & 1.5V Pwr
09 DDR SO-DIMM 1 (1/2)
10 DDR SO-DIMM 1 (2/2)
11 DDR SO-DIMM 2 (1/2)
12 DDR SO-DIMM 2 (2/2)
13 DDR SSTL-2 Termination
14 TDM-2 Conn &Thermal Sensor
15 KBC & T/P
16 ROM & LED & LID & 2MB ROM
17 CLOCK GENERATOR
18 Reset and Clock Buffers
19 LPC SUPER I/O (ITE8705F)
20 LPT PORTS
21 XGI Volari VGA(AGP)
22 XGI Volari VGA(CRT/TV/LVDS)
23 XGI Volari VGA(POWER)
24 XGI Volari VGA(RAMC)
25 XGI Volari VGA(VRAM)
26 CRT CON & TV-OUT
27 PANEL POWER & PANEL CON
28 ALi SB (1/5) <HT/PCI>
29 ALi SB (2/5) <USB/IDE/AUDIO>
30 ALi SB (3/5) <LPC/SMBus>
31 ALi SB(4/5) <PMU/CPU/GPIO>
32 ALi SB (5/5) <PWR/GND>
33 ALi SB Strapping Options
34 HDD & CDROM CONN.
35 USB CONNECTOR
36 SEQUENCE POWER CIRCUIT
37 MINI PCI CONN.& MDC
38 RTL8110S
39 RJ45
40 ALC 655
41 OPA & AUDIO JACK
42 DC_IN/SELECT/CHARGER
43 MAX1718 CPU Vcore / 1.2V
44 MAX1858 1.5V/DIMM/DDR
45 MAX1999 +3VAUX/+5VAUX/ALWAYS
46 RT9202 +2.5VAUX


| PAGE | 1 | 2 | 3 | 4 | 5 | 6 | 7 | 8 | 9 | 10 | 11 | 12 | 13 | 14 | 15 | 16 | 17 | 18 | 19 |
|---|---|---|---|---|---|---|---|---|---|---|---|---|---|---|---|---|---|---|---|
| REV. | 2.0 | 2.0 | 2.0 | 2.0 | 2.0 | 2.0 | 2.0 | 2.0 | 2.0 | 2.0 | 2.0 | 2.0 | 2.0 | 2.0 | 2.0 | 2.0 | 2.0 | 2.0 | 2.0 |
| DATE | 12/23 | 12/23 | 12/23 | 12/23 | 12/23 | 12/23 | 12/23 | 12/23 | 12/23 | 12/23 | 12/23 | 12/23 | 12/23 | 12/23 | 12/23 | 12/23 | 12/23 | 12/23 | 12/23 |

| PAGE | 20 | 21 | 22 | 23 | 24 | 25 | 26 | 27 | 28 | 29 | 30 | 31 | 32 | 33 | 34 | 35 | 36 | 37 | 38 |
|---|---|---|---|---|---|---|---|---|---|---|---|---|---|---|---|---|---|---|---|
| REV. | 2.0 | 2.0 | 2.0 | 2.0 | 2.0 | 2.0 | 2.0 | 2.0 | 2.0 | 2.0 | 2.0 | 2.0 | 2.0 | 2.0 | 2.0 | 2.0 | 2.0 | 2.0 | 2.0 |
| DATE | 12/23 | 12/23 | 12/23 | 12/23 | 12/23 | 12/23 | 12/23 | 12/23 | 12/23 | 12/23 | 12/23 | 12/23 | 12/23 | 12/23 | 12/23 | 12/23 | 12/23 | 12/23 | 12/23 |

| PAGE | 39 | 40 | 41 | 42 | 43 | 44 | 45 | 46 |
|---|---|---|---|---|---|---|---|---|
| REV. | 2.0 | 2.0 | 2.0 | 2.0 | 2.0 | 2.0 | 2.0 | 2.0 |
| DATE | 12/23 | 12/23 | 12/23 | 12/23 | 12/23 | 12/23 | 12/23 | 12/23 |

**P/N : 15-F56-011000**

**PCB M/B.532.V.1.0.318*173.8*1.6mm.6L YELLO**

Elitegroup Computer Systems

Title: 01 Table of Contents

Size: Custom | Document Number: 532-1-4-01 | Rev: 2.0

Date: Thursday, December 23, 2004 | Sheet 1 of 46

# REVISION HISTORY

---

*A.0 INITIAL RELEASE*

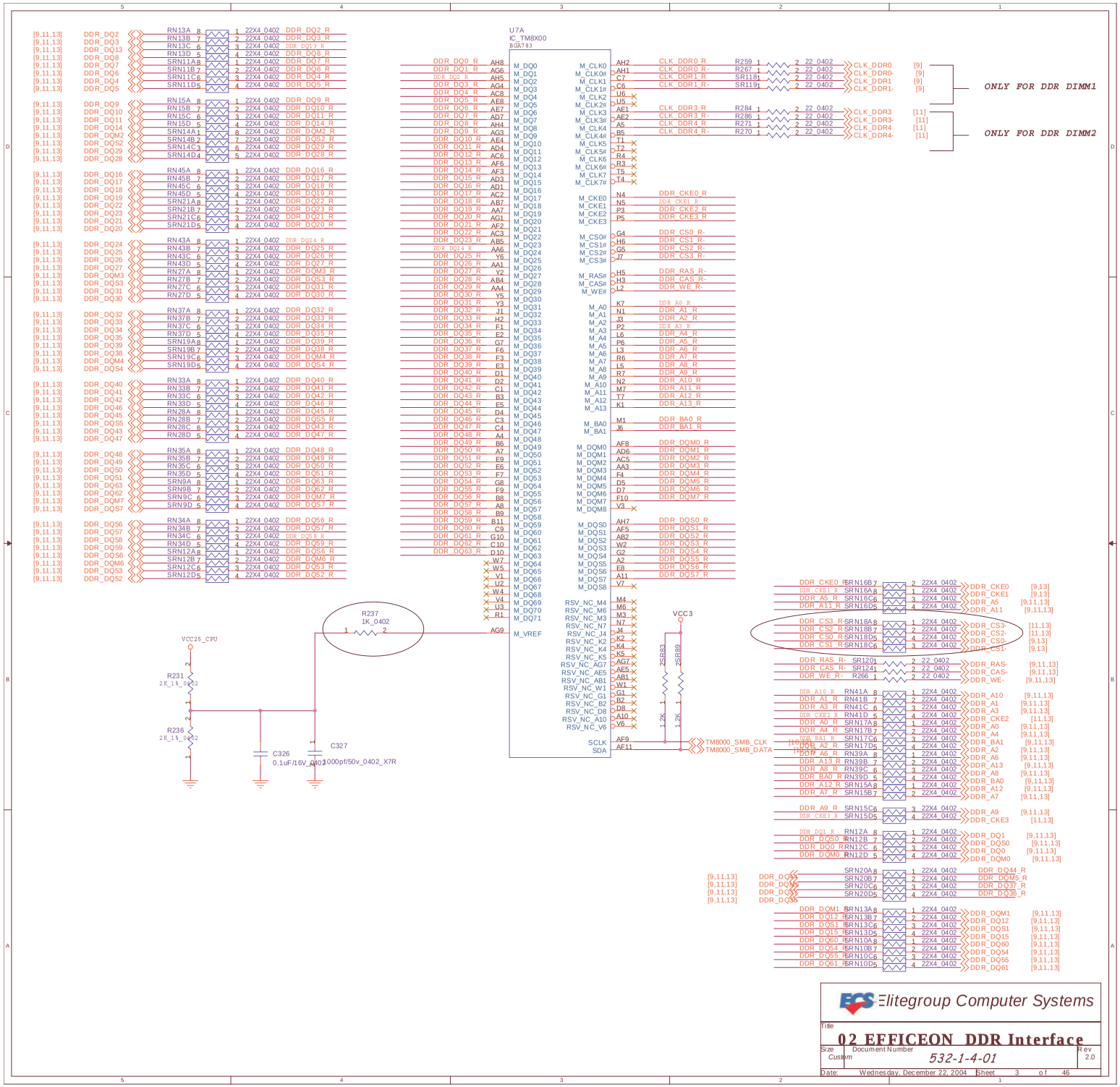


Elitegroup Computer Systems

Title

# 02 EFFICEON DDR Interface

| Size | Document Number | Rev |
|---|---|---|
| Custom | 532-1-4-01 | 2.0 |

Date: Wednesday, December 22, 2004 Sheet 3 of 46

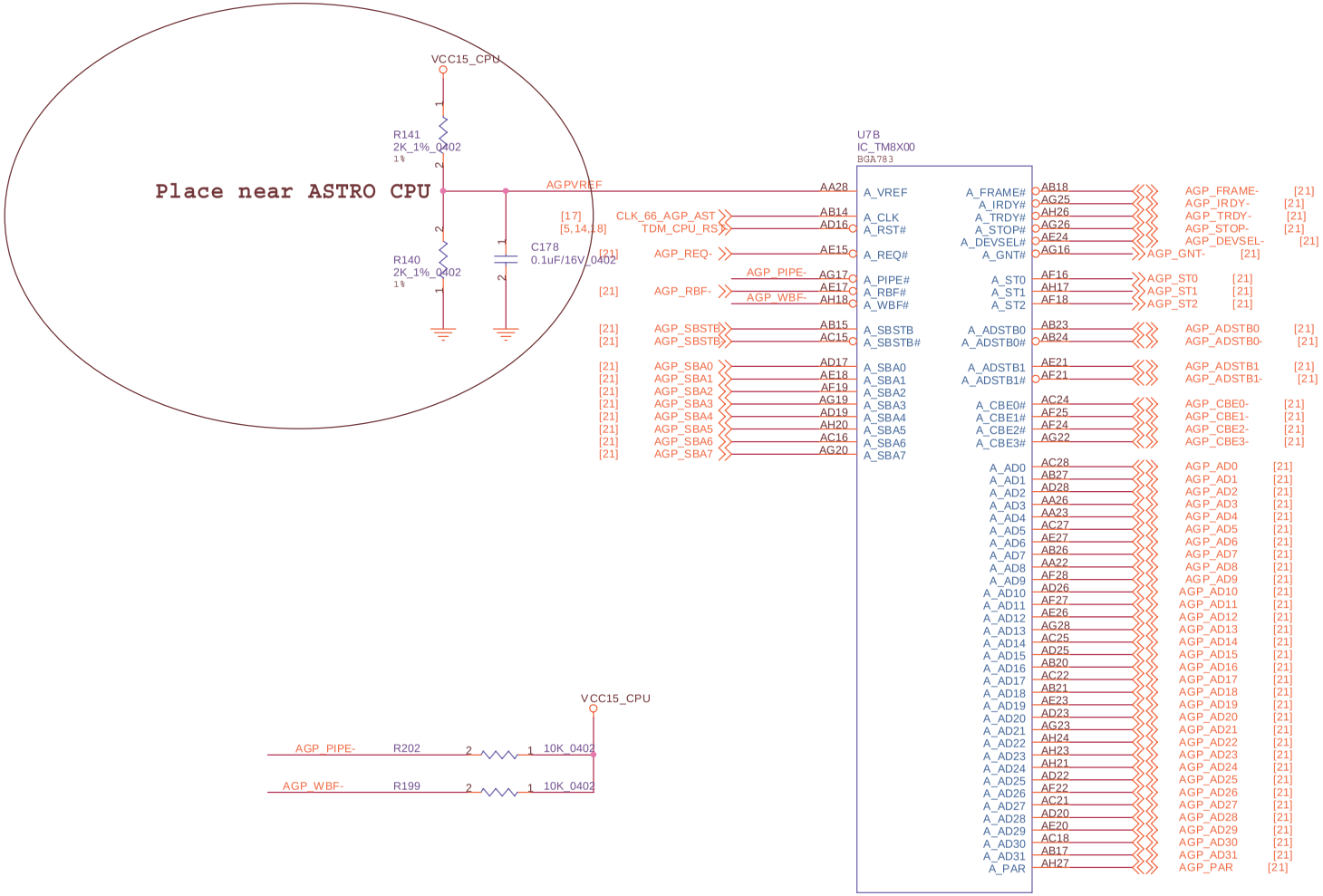


Elitegroup Computer Systems

Title

# 03 EFFICEON AGP Interface

| Size | Document Number | Rev |
|---|---|---|
| Custom | 532-1-4-01 | 2.0 |

Date: Wednesday, December 22, 2004 Sheet 4 of 46

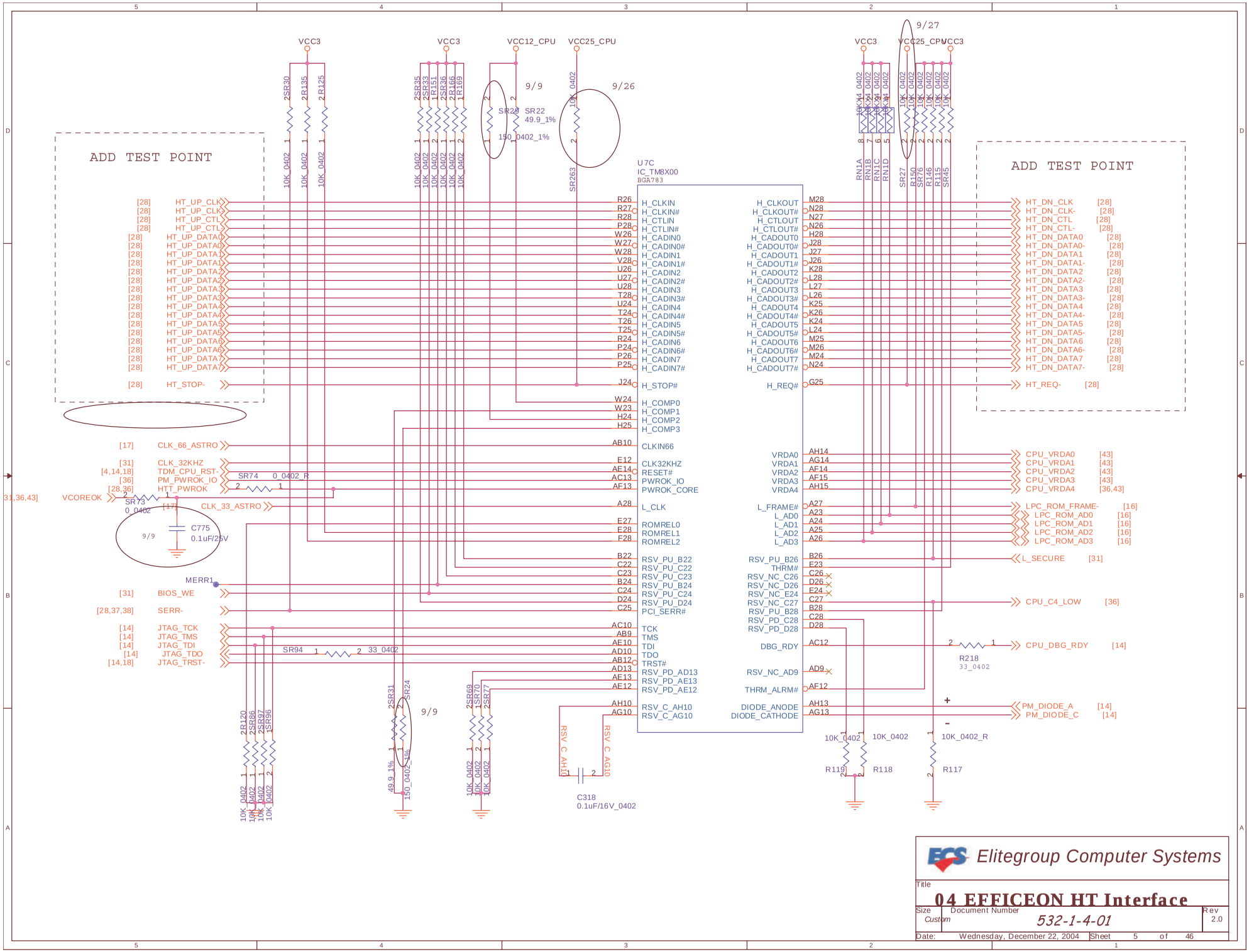


Elitegroup Computer Systems

Title: 04 EFFICEON HT Interface

Size: Custom | Document Number: 532-1-4-01 | Rev: 2.0

Date: Wednesday, December 22, 2004 | Sheet 5 of 46

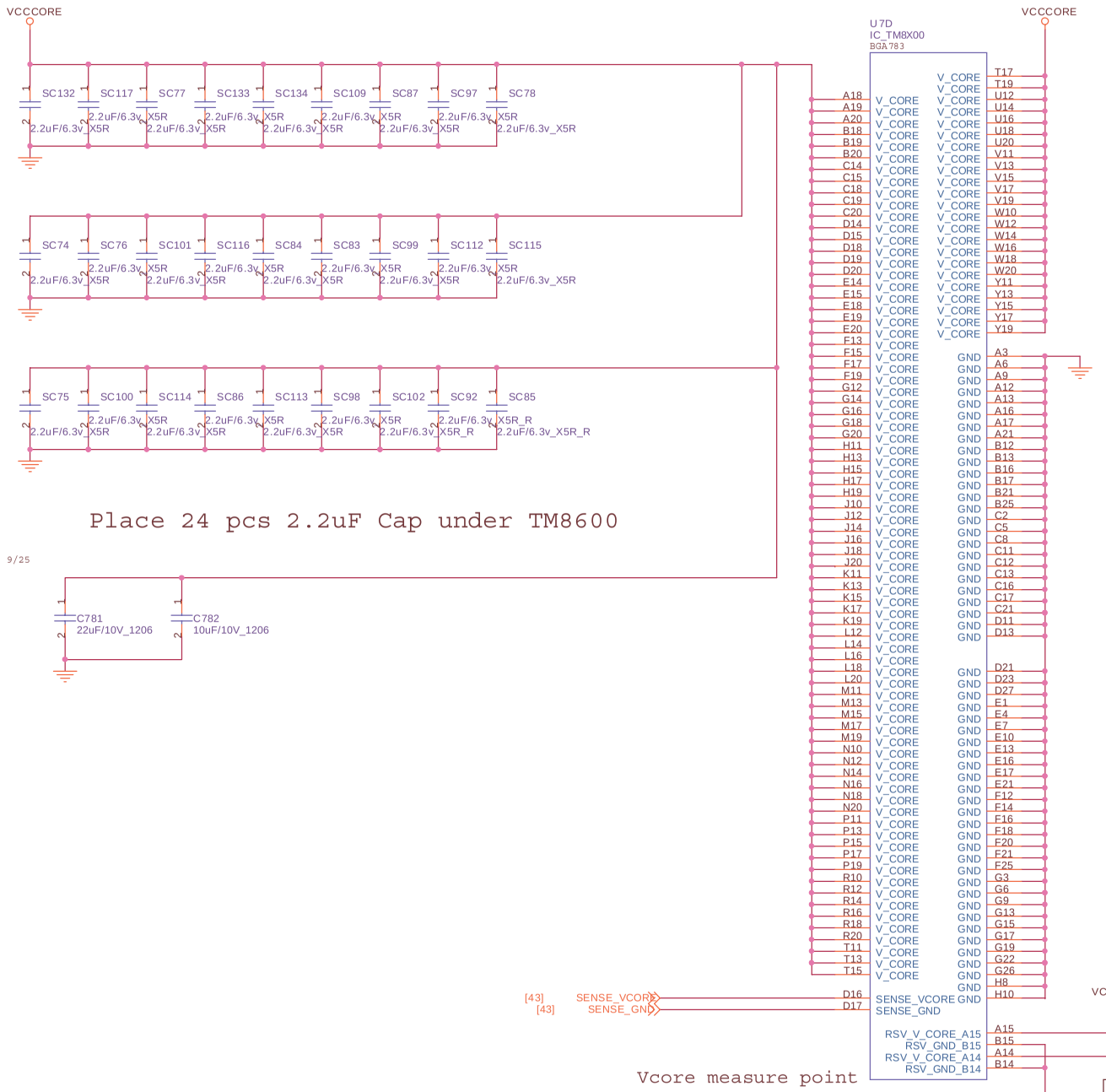


Elitegroup Computer Systems

Title

**05 EFFICEON Core Power**

| Size | Document Number | Rev |
|---|---|---|
| Custom | 532-1-4-01 | 2.0 |

Date: Wednesday, December 22, 2004 Sheet 6 of 46

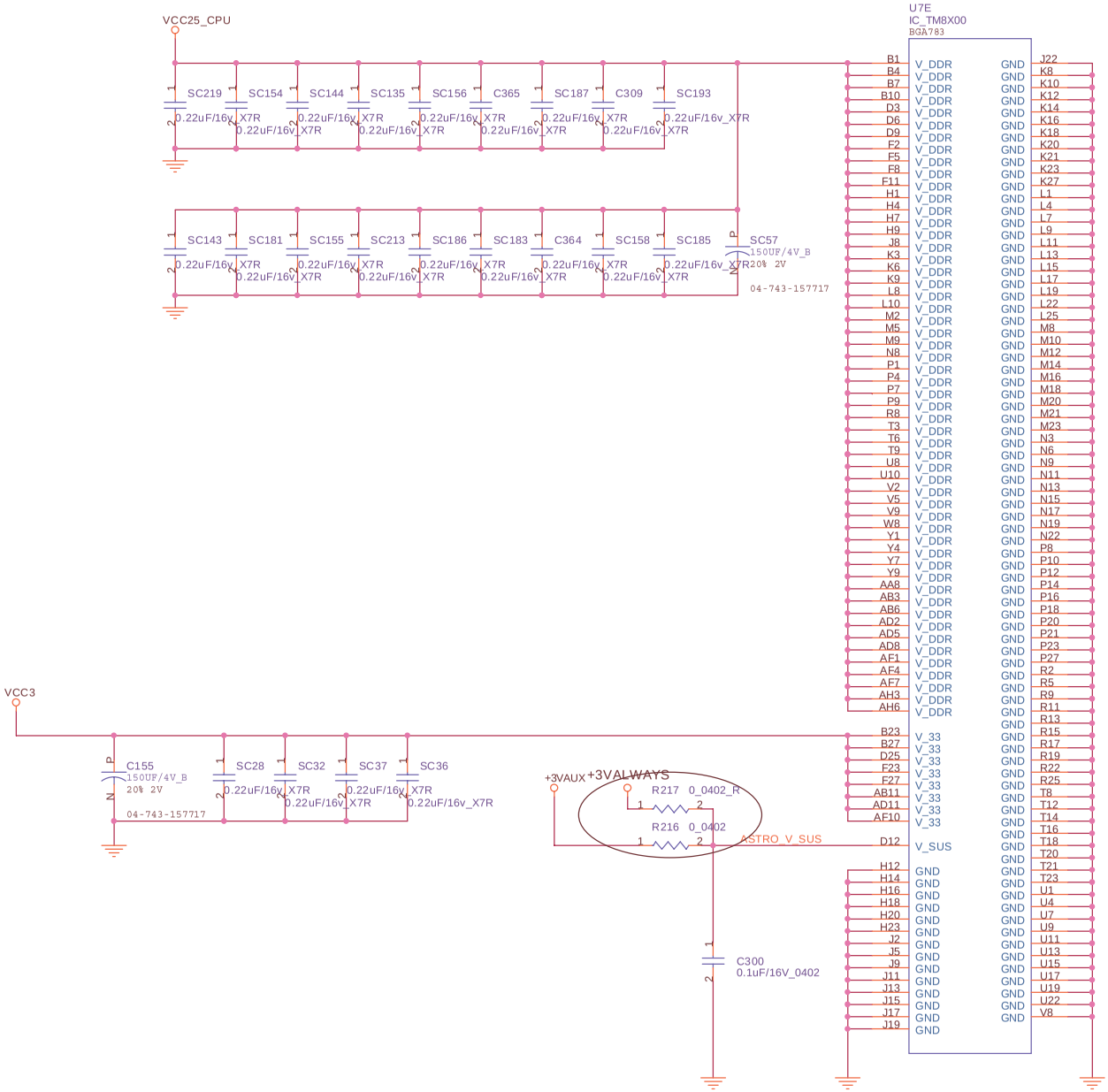


Elitegroup Computer Systems

Title

# 06 EFFICEON 2.5 & 3.3V Pwr

| Size | Document Number | Rev |
|---|---|---|
| Custom | 532-1-4-01 | 2.0 |

Date: Monday, December 20, 2004 Sheet 7 of 46

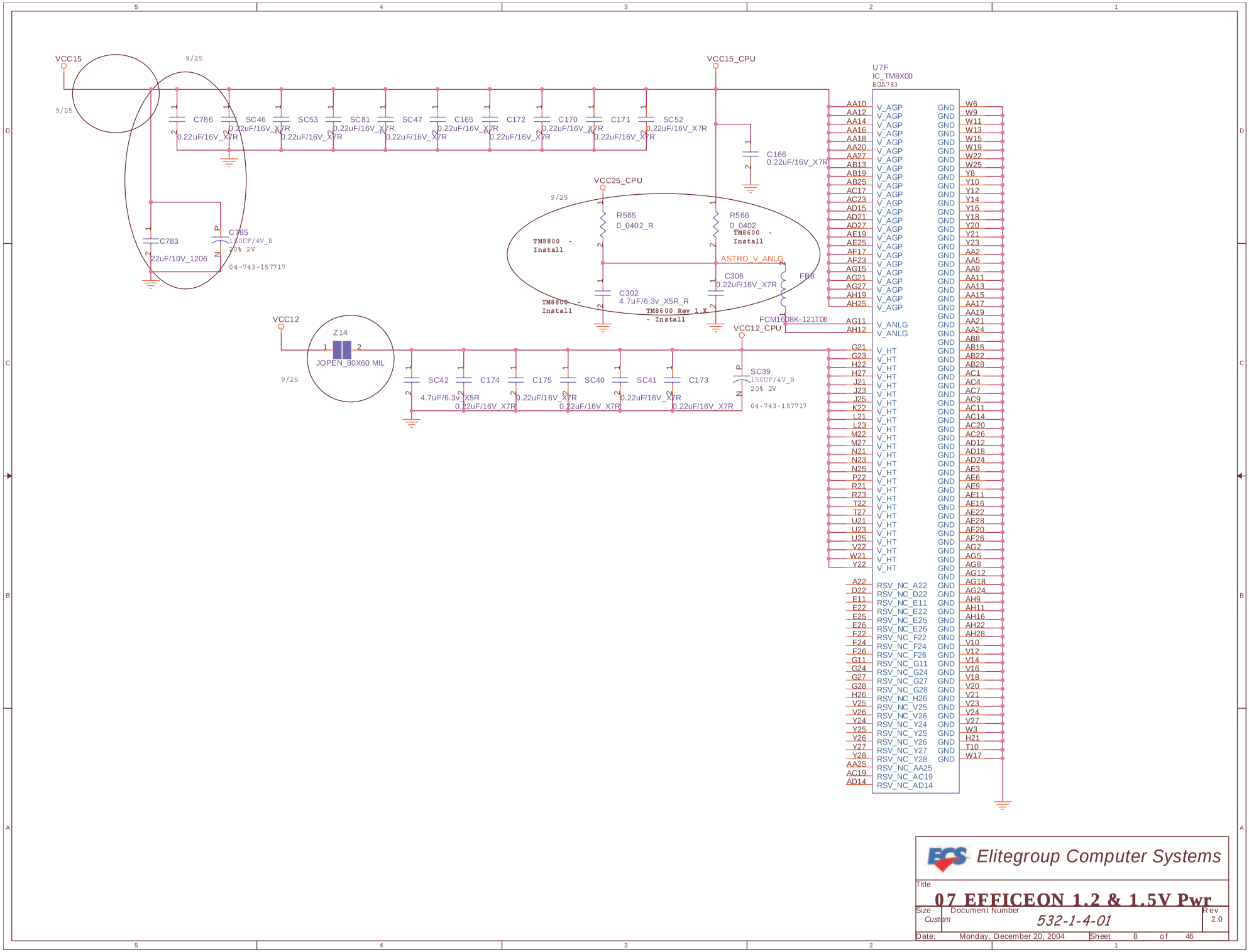


Elitegroup Computer Systems

Title: 07 EFFICEON 1.2 & 1.5V Pwr

Size: Custom | Document Number: 532-1-4-01 | Rev: 2.0

Date: Monday, December 20, 2004 | Sheet 8 of 46

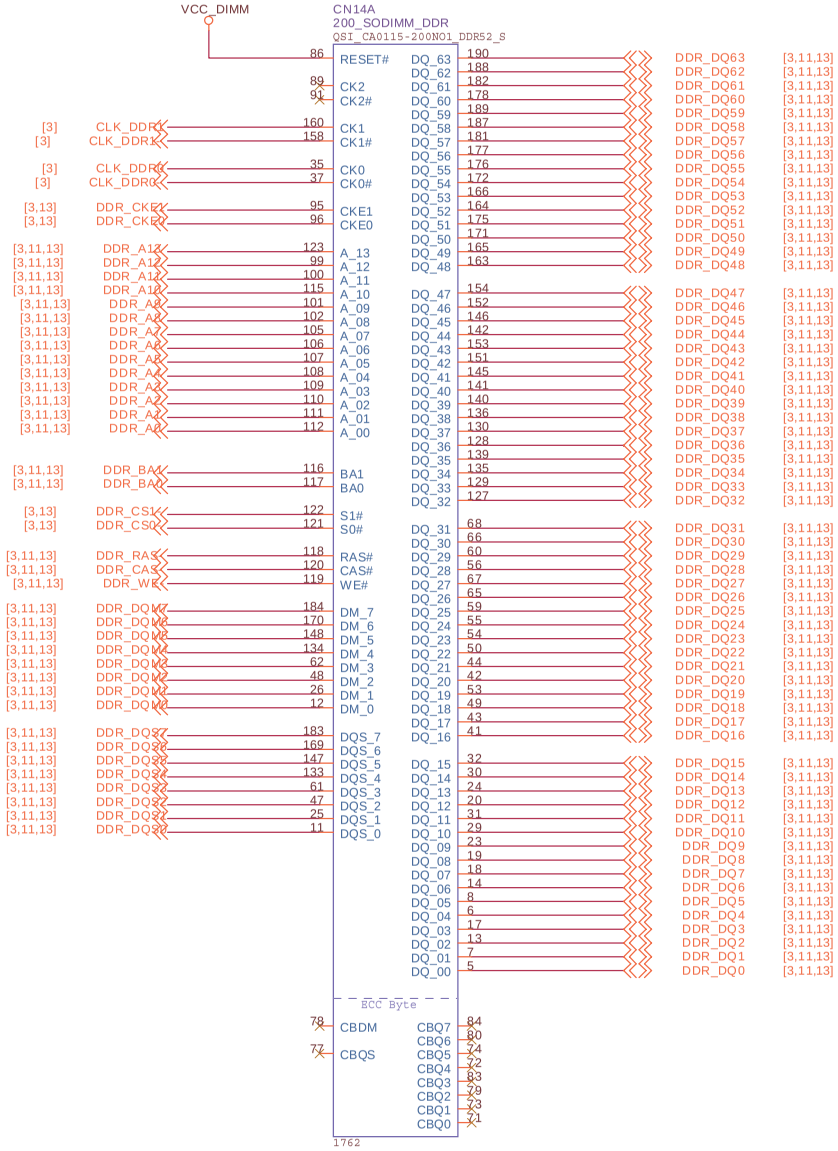


Elitegroup Computer Systems

Title

**08 DDR SO-DIMM 1 (1/2)**

| Size | Document Number | Rev |
|---|---|---|
| Custom | 532-1-4-01 | 2.0 |

Date: Wednesday, December 22, 2004 Sheet 9 of 46

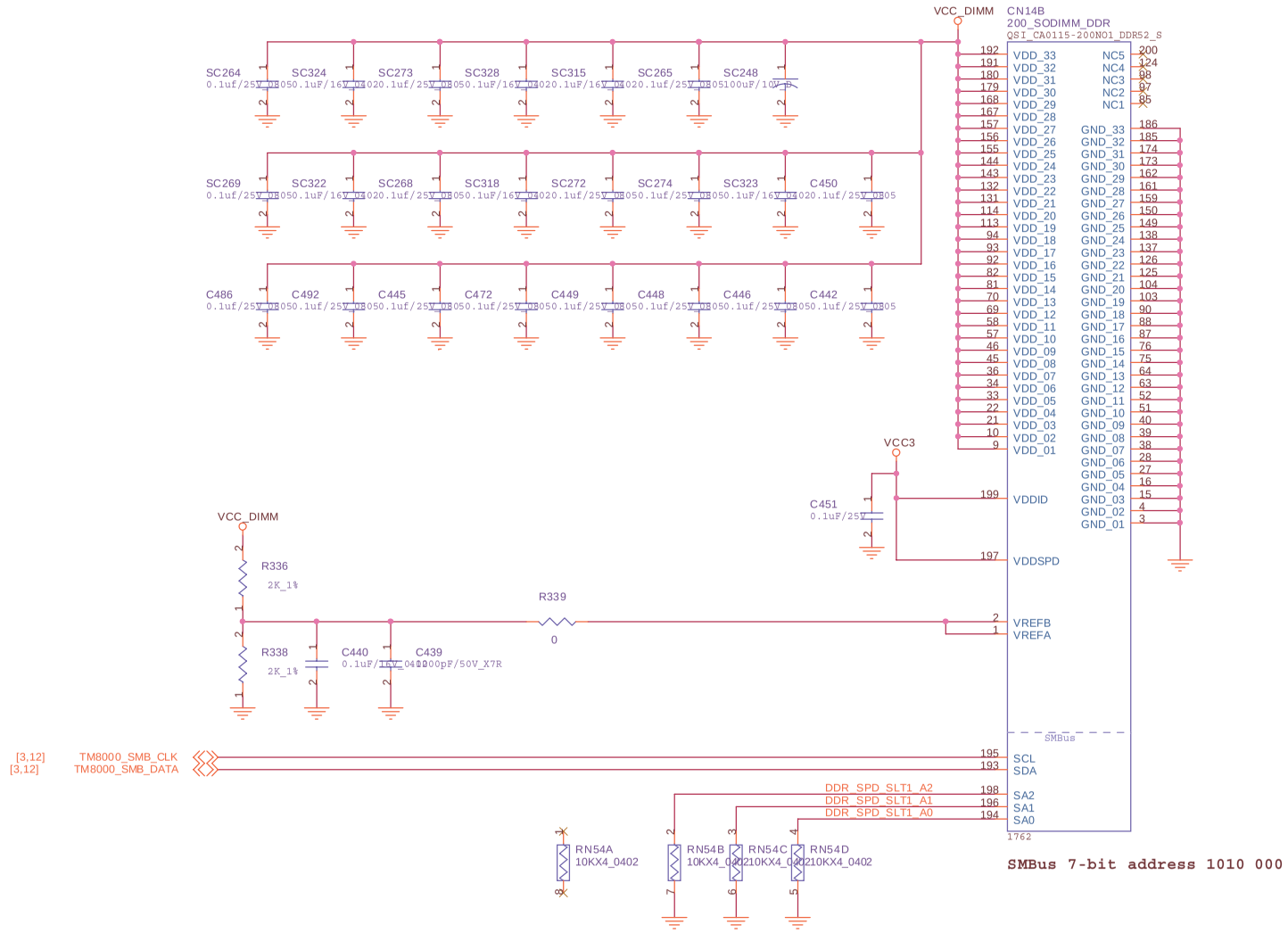


Elitegroup Computer Systems

Title: 09 DDR SO-DIMM 1 (2/2)

Size: Custom | Document Number: 532-1-4-01 | Rev: 2.0

Date: Wednesday, December 22, 2004 | Sheet 10 of 46

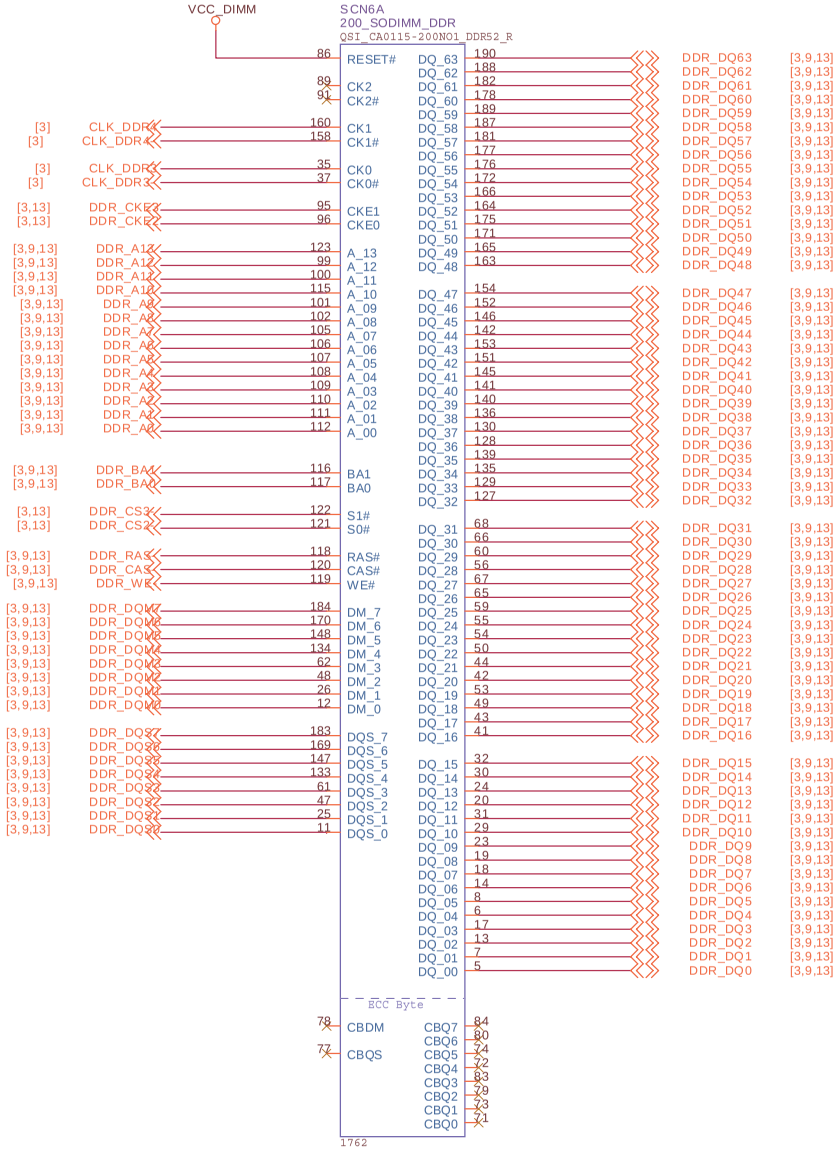


Elitegroup Computer Systems

Title

# 10 DDR SO-DIMM 2 (1/2)

| Size | Document Number | Rev |
|---|---|---|
| Custom | 532-1-4-01 | 2.0 |

Date: Wednesday, December 22, 2004 Sheet 11 of 46

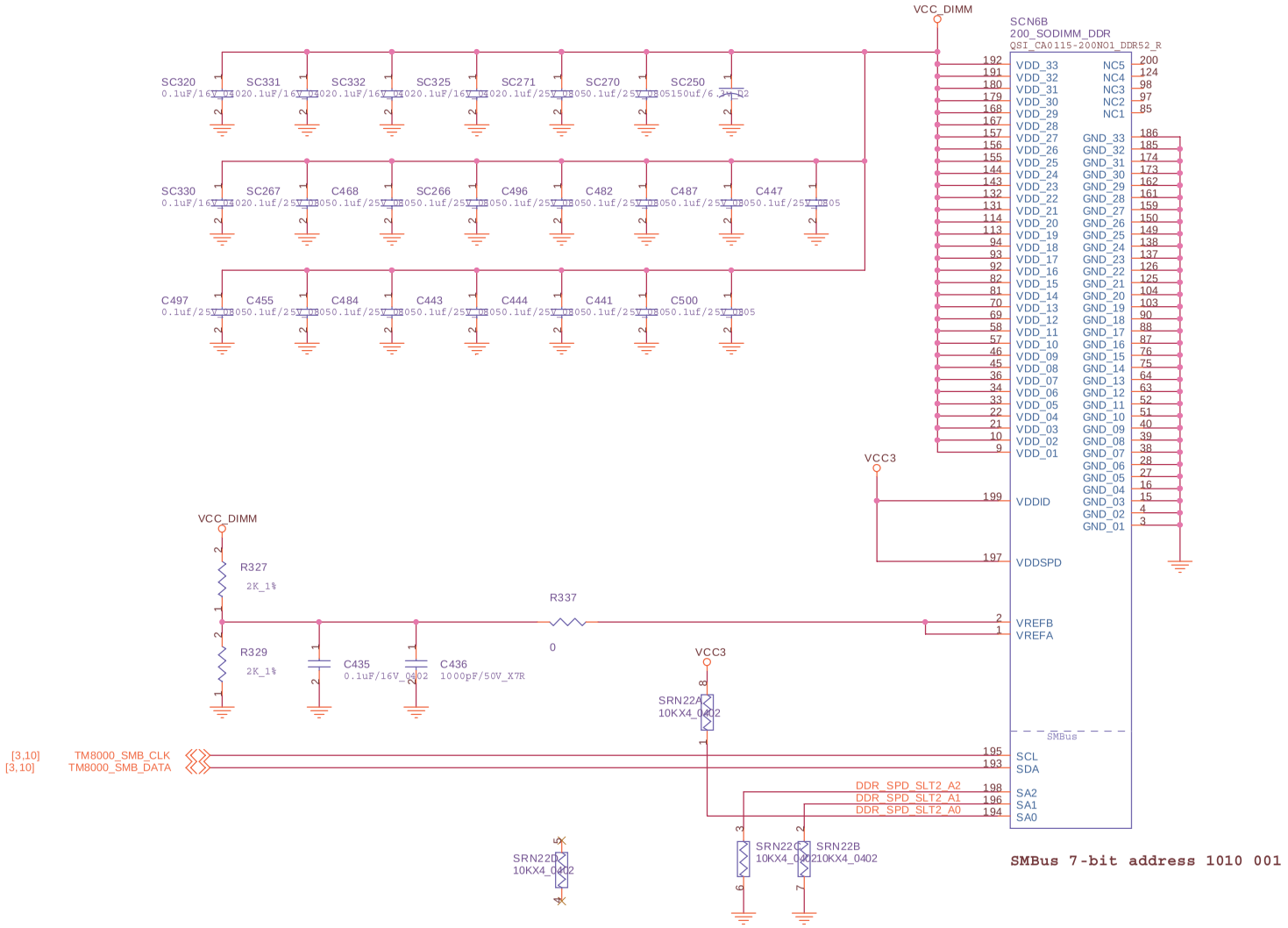


Elitegroup Computer Systems

Title: 11 DDR SO-DIMM 2 (1/2)

Size: Custom | Document Number: 532-1-4-01 | Rev: 2.0

Date: Wednesday, December 22, 2004 | Sheet 12 of 46

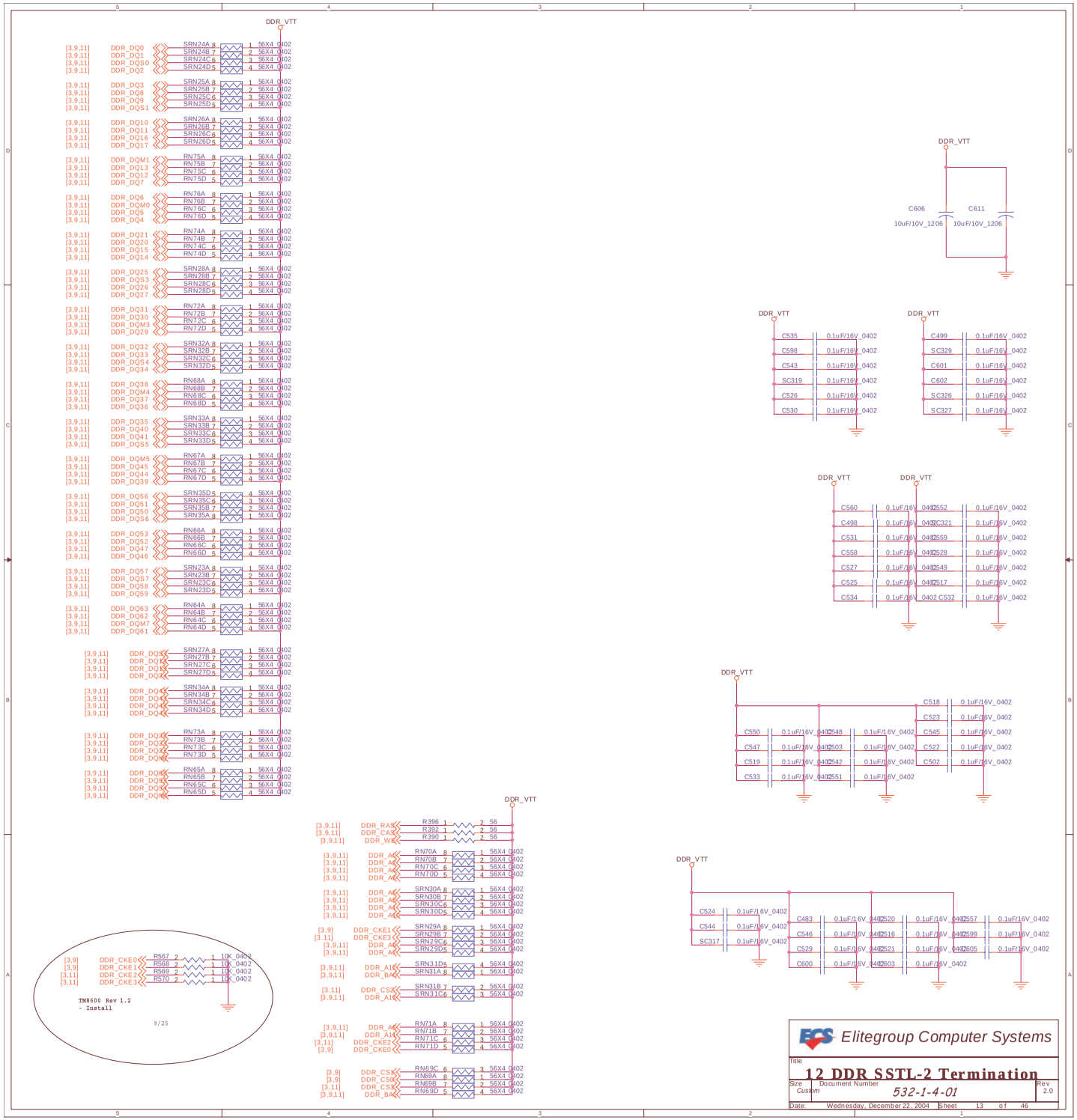
DDR_VTT
[3,9,11] DDR_DQ0 SRN24A 8 1 56X4 0402
[3,9,11] DDR_DQ1 SRN24B 7 2 56X4 0402
[3,9,11] DDR_DQS0 SRN24C 6 3 56X4 0402
[3,9,11] DDR_DQ2 SRN24D 5 4 56X4 0402
[3,9,11] DDR_DQ3 SRN25A 8 1 56X4 0402
[3,9,11] DDR_DQ8 SRN25B 7 2 56X4 0402
[3,9,11] DDR_DQ9 SRN25C 6 3 56X4 0402
[3,9,11] DDR_DQS1 SRN25D 5 4 56X4 0402
[3,9,11] DDR_DQ10 SRN26A 8 1 56X4 0402
[3,9,11] DDR_DQ11 SRN26B 7 2 56X4 0402
[3,9,11] DDR_DQ16 SRN26C 6 3 56X4 0402
[3,9,11] DDR_DQ17 SRN26D 5 4 56X4 0402
[3,9,11] DDR_DQM1 RN75A 8 1 56X4 0402
[3,9,11] DDR_DQ13 RN75B 7 2 56X4 0402
[3,9,11] DDR_DQ12 RN75C 6 3 56X4 0402
[3,9,11] DDR_DQ7 RN75D 5 4 56X4 0402
[3,9,11] DDR_DQ6 RN76A 8 1 56X4 0402
[3,9,11] DDR_DQM0 RN76B 7 2 56X4 0402
[3,9,11] DDR_DQ5 RN76C 6 3 56X4 0402
[3,9,11] DDR_DQ4 RN76D 5 4 56X4 0402
[3,9,11] DDR_DQ21 RN74A 8 1 56X4 0402
[3,9,11] DDR_DQ20 RN74B 7 2 56X4 0402
[3,9,11] DDR_DQ15 RN74C 6 3 56X4 0402
[3,9,11] DDR_DQ14 RN74D 5 4 56X4 0402
[3,9,11] DDR_DQ25 SRN28A 8 1 56X4 0402
[3,9,11] DDR_DQS3 SRN28B 7 2 56X4 0402
[3,9,11] DDR_DQ26 SRN28C 6 3 56X4 0402
[3,9,11] DDR_DQ27 SRN28D 5 4 56X4 0402
[3,9,11] DDR_DQ31 RN72A 8 1 56X4 0402
[3,9,11] DDR_DQ30 RN72B 7 2 56X4 0402
[3,9,11] DDR_DQM3 RN72C 6 3 56X4 0402
[3,9,11] DDR_DQ29 RN72D 5 4 56X4 0402
[3,9,11] DDR_DQ32 SRN32A 8 1 56X4 0402
[3,9,11] DDR_DQ33 SRN32B 7 2 56X4 0402
[3,9,11] DDR_DQS4 SRN32C 6 3 56X4 0402
[3,9,11] DDR_DQ34 SRN32D 5 4 56X4 0402
[3,9,11] DDR_DQ38 RN68A 8 1 56X4 0402
[3,9,11] DDR_DQM4 RN68B 7 2 56X4 0402
[3,9,11] DDR_DQ37 RN68C 6 3 56X4 0402
[3,9,11] DDR_DQ36 RN68D 5 4 56X4 0402
[3,9,11] DDR_DQ35 SRN33A 8 1 56X4 0402
[3,9,11] DDR_DQ40 SRN33B 7 2 56X4 0402
[3,9,11] DDR_DQ41 SRN33C 6 3 56X4 0402
[3,9,11] DDR_DQS5 SRN33D 5 4 56X4 0402
[3,9,11] DDR_DQM5 RN67A 8 1 56X4 0402
[3,9,11] DDR_DQ45 RN67B 7 2 56X4 0402
[3,9,11] DDR_DQ44 RN67C 6 3 56X4 0402
[3,9,11] DDR_DQ39 RN67D 5 4 56X4 0402
[3,9,11] DDR_DQ56 SRN35D 5 4 56X4 0402
[3,9,11] DDR_DQ51 SRN35C 6 3 56X4 0402
[3,9,11] DDR_DQ50 SRN35B 7 2 56X4 0402
[3,9,11] DDR_DQS6 SRN35A 8 1 56X4 0402
[3,9,11] DDR_DQ53 RN66A 8 1 56X4 0402
[3,9,11] DDR_DQ52 RN66B 7 2 56X4 0402
[3,9,11] DDR_DQ47 RN66C 6 3 56X4 0402
[3,9,11] DDR_DQ46 RN66D 5 4 56X4 0402
[3,9,11] DDR_DQ57 SRN23A 8 1 56X4 0402
[3,9,11] DDR_DQS7 SRN23B 7 2 56X4 0402
[3,9,11] DDR_DQ58 SRN23C 6 3 56X4 0402
[3,9,11] DDR_DQ59 SRN23D 5 4 56X4 0402
[3,9,11] DDR_DQ63 RN64A 8 1 56X4 0402
[3,9,11] DDR_DQ62 RN64B 7 2 56X4 0402
[3,9,11] DDR_DQM7 RN64C 6 3 56X4 0402
[3,9,11] DDR_DQ61 RN64D 5 4 56X4 0402
[3,9,11] DDR_DQ55 SRN27A 8 1 56X4 0402
[3,9,11] DDR_DQ54 SRN27B 7 2 56X4 0402
[3,9,11] DDR_DQ49 SRN27C 6 3 56X4 0402
[3,9,11] DDR_DQ48 SRN27D 5 4 56X4 0402
[3,9,11] DDR_DQ42 SRN34A 8 1 56X4 0402
[3,9,11] DDR_DQ43 SRN34B 7 2 56X4 0402
[3,9,11] DDR_DQ38 SRN34C 6 3 56X4 0402
[3,9,11] DDR_DQ37 SRN34D 5 4 56X4 0402
[3,9,11] DDR_DQ33 RN73A 8 1 56X4 0402
[3,9,11] DDR_DQ32 RN73B 7 2 56X4 0402
[3,9,11] DDR_DQ27 RN73C 6 3 56X4 0402
[3,9,11] DDR_DQ26 RN73D 5 4 56X4 0402
[3,9,11] DDR_DQ31 RN65A 8 1 56X4 0402
[3,9,11] DDR_DQ30 RN65B 7 2 56X4 0402
[3,9,11] DDR_DQ25 RN65C 6 3 56X4 0402
[3,9,11] DDR_DQ24 RN65D 5 4 56X4 0402
DDR_VTT
C606 10uF/10V_1206
C611 10uF/10V_1206
DDR_VTT
C535 0.1uF/16V_0402
C598 0.1uF/16V_0402
C543 0.1uF/16V_0402
SC319 0.1uF/16V_0402
C526 0.1uF/16V_0402
C530 0.1uF/16V_0402
DDR_VTT
C499 0.1uF/16V_0402
SC329 0.1uF/16V_0402
C601 0.1uF/16V_0402
C602 0.1uF/16V_0402
SC326 0.1uF/16V_0402
SC327 0.1uF/16V_0402
DDR_VTT
C560 0.1uF/16V_0402
C498 0.1uF/16V_0402
C531 0.1uF/16V_0402
C558 0.1uF/16V_0402
C527 0.1uF/16V_0402
C525 0.1uF/16V_0402
C534 0.1uF/16V_0402
DDR_VTT
C552 0.1uF/16V_0402
SC321 0.1uF/16V_0402
C559 0.1uF/16V_0402
C528 0.1uF/16V_0402
C549 0.1uF/16V_0402
C517 0.1uF/16V_0402
C532 0.1uF/16V_0402
DDR_VTT
C518 0.1uF/16V_0402
C523 0.1uF/16V_0402
C545 0.1uF/16V_0402
C522 0.1uF/16V_0402
C502 0.1uF/16V_0402
C550 0.1uF/16V_0402
C548 0.1uF/16V_0402
C547 0.1uF/16V_0402
C503 0.1uF/16V_0402
C519 0.1uF/16V_0402
C542 0.1uF/16V_0402
C533 0.1uF/16V_0402
C551 0.1uF/16V_0402
DDR_VTT
C524 0.1uF/16V_0402
C544 0.1uF/16V_0402
SC317 0.1uF/16V_0402
C483 0.1uF/16V_0402
C520 0.1uF/16V_0402
C557 0.1uF/16V_0402
C546 0.1uF/16V_0402
C516 0.1uF/16V_0402
C599 0.1uF/16V_0402
C529 0.1uF/16V_0402
C521 0.1uF/16V_0402
C605 0.1uF/16V_0402
C600 0.1uF/16V_0402
C603 0.1uF/16V_0402
DDR_VTT
[3,9,11] DDR_RAS R396 1 2 56
[3,9,11] DDR_CAS R392 1 2 56
[3,9,11] DDR_WE R390 1 2 56
[3,9,11] DDR_A5 RN70A 8 1 56X4 0402
[3,9,11] DDR_A2 RN70B 7 2 56X4 0402
[3,9,11] DDR_A4 RN70C 6 3 56X4 0402
[3,9,11] DDR_A6 RN70D 5 4 56X4 0402
[3,9,11] DDR_A6 SRN30A 8 1 56X4 0402
[3,9,11] DDR_A4 SRN30B 7 2 56X4 0402
[3,9,11] DDR_A2 SRN30C 6 3 56X4 0402
[3,9,11] DDR_A5 SRN30D 5 4 56X4 0402
[3,9] DDR_CKE1 SRN29A 8 1 56X4 0402
[3,11] DDR_CKE3 SRN29B 7 2 56X4 0402
[3,9,11] DDR_A8 SRN29C 6 3 56X4 0402
[3,9,11] DDR_A7 SRN29D 5 4 56X4 0402
[3,9,11] DDR_A13 SRN31D 5 4 56X4 0402
[3,9,11] DDR_BA0 SRN31A 8 1 56X4 0402
[3,11] DDR_CS2 SRN31B 7 2 56X4 0402
[3,9,11] DDR_A10 SRN31C 6 3 56X4 0402
[3,9,11] DDR_A9 RN71A 8 1 56X4 0402
[3,9,11] DDR_A11 RN71B 7 2 56X4 0402
[3,11] DDR_CKE2 RN71C 6 3 56X4 0402
[3,9] DDR_CKE0 RN71D 5 4 56X4 0402
[3,9] DDR_CS1 RN69C 6 3 56X4 0402
[3,9] DDR_CS0 RN69A 8 1 56X4 0402
[3,11] DDR_CS3 RN69B 7 2 56X4 0402
[3,9,11] DDR_BA1 RN69D 5 4 56X4 0402
[3,9] DDR_CKE0 R567 2 1 10K 0402
[3,9] DDR_CKE1 R568 2 1 10K 0402
[3,11] DDR_CKE2 R569 2 1 10K 0402
[3,11] DDR_CKE3 R570 2 1 10K 0402
TM8600 Rev 1.2
- Install
9/25
Elitegroup Computer Systems
Title
12 DDR SSTL-2 Termination
Size Document Number Rev
Custom 532-1-4-01 2.0
Date: Wednesday, December 22, 2004 Sheet 13 of 46

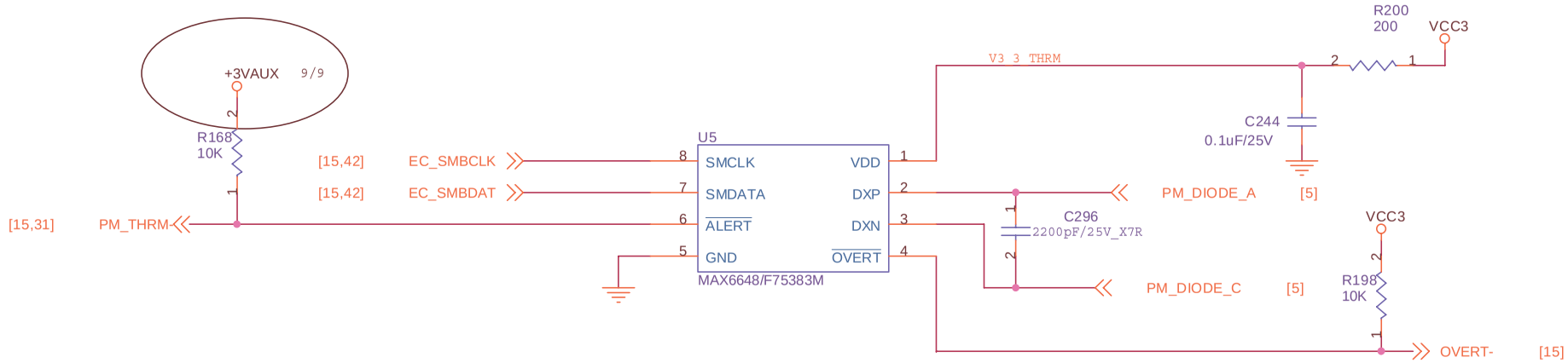


Place close to TM8600

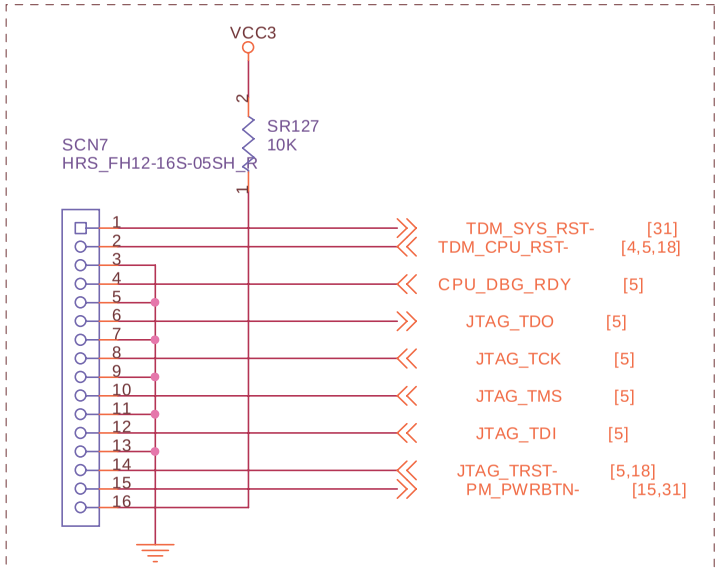


Customer Debug Connector

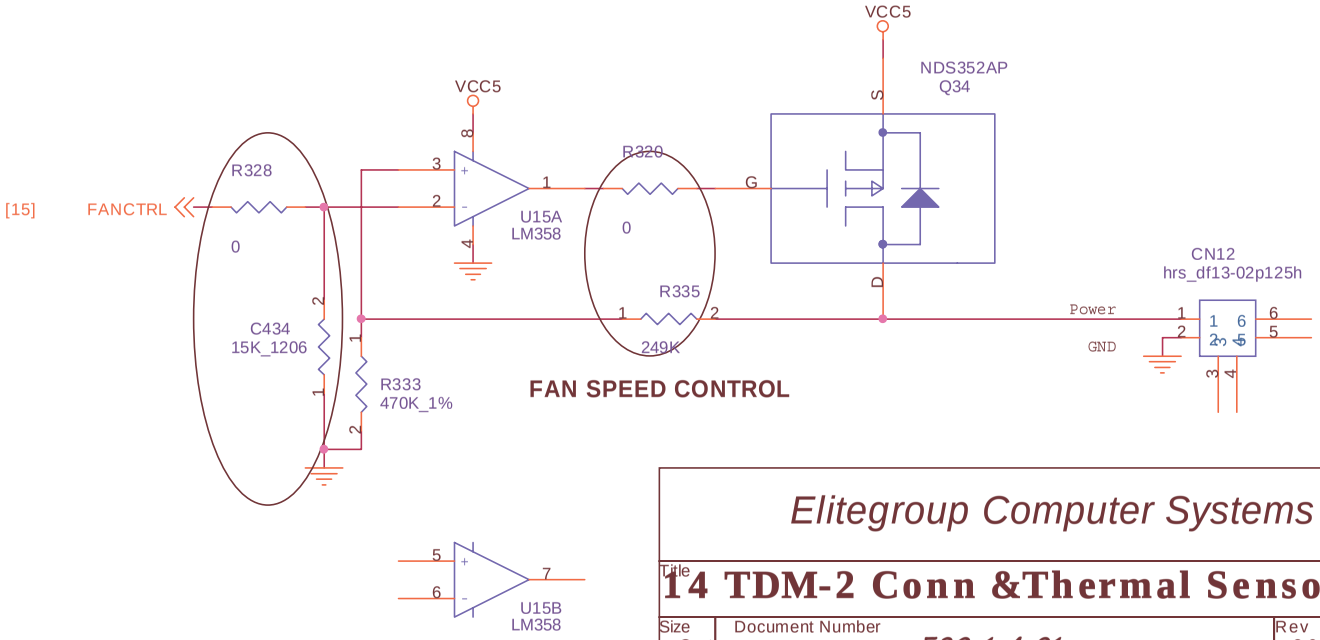


FAN SPEED CONTROL

Elitegroup Computer Systems

Title: 14 TDM-2 Conn &Thermal Sensor

| Size | Document Number | Rev |
|---|---|---|
| Custom | 532-1-4-01 | 2.0 |

Date: Wednesday, December 22, 2004 Sheet 14 of 46

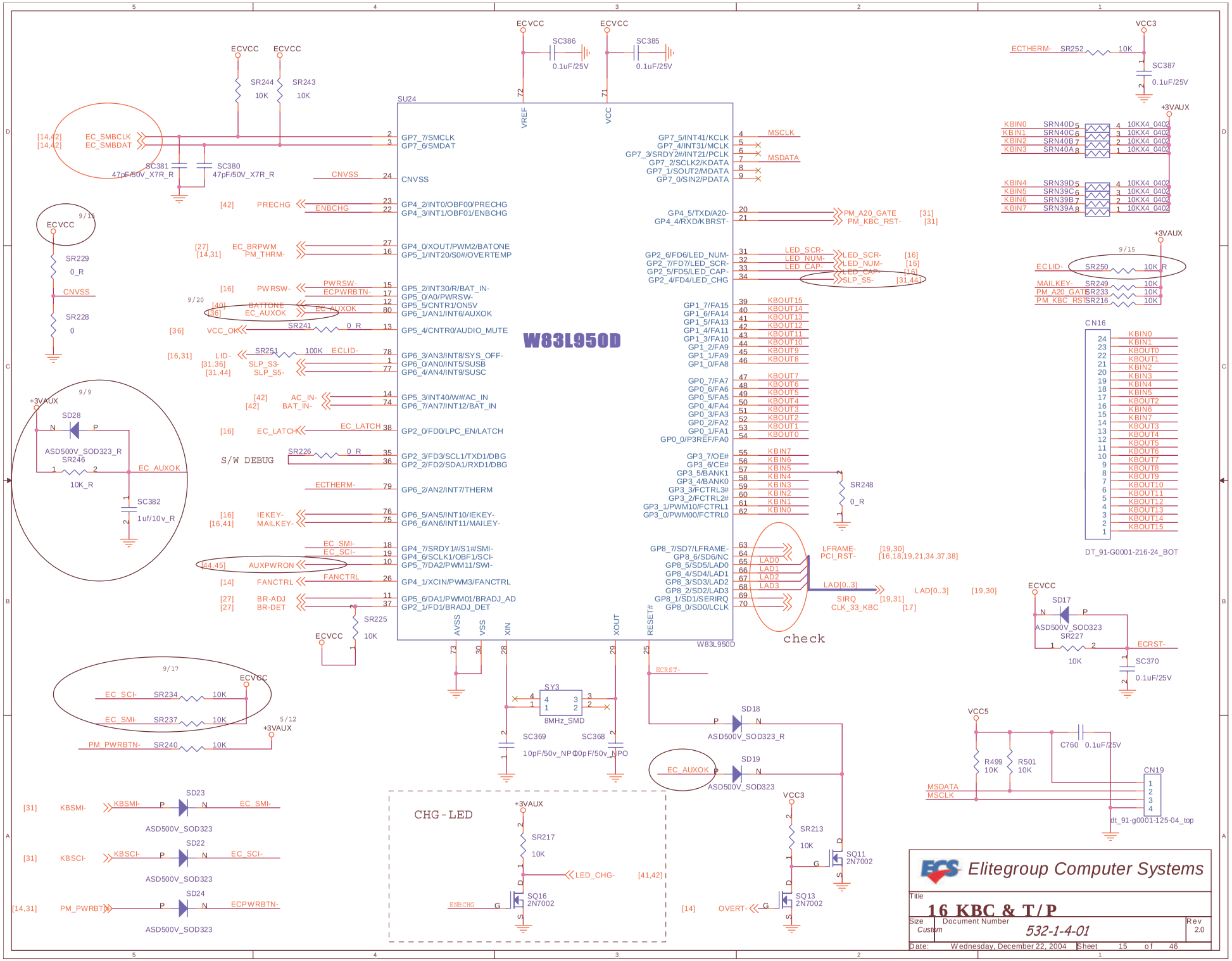
W83L950D
SU24
ECVCC
VCC3
+3VAUX
VCC5
SC386 0.1uF/25V
SC385 0.1uF/25V
SR244 10K
SR243 10K
SC381 47pF/50V_X7R_R
SC380 47pF/50V_X7R_R
EC_SMBCLK
EC_SMBDAT
CNVSS
PRECHG
ENBCHG
EC_BRPWM
PM_THRM-
PWRSW-
ECPWRBTN-
BATTONE
EC_AUXOK
VCC_OK
SR241 0_R
LID-
SLP_S3-
SLP_S5-
SR251 100K
ECLID-
AC_IN-
BAT_IN-
EC_LATCH
S/W DEBUG
SR226 0_R
ECTHERM-
IEKEY-
MAILKEY-
EC_SMI-
EC_SCI-
AUXPWRON
FANCTRL
BR-ADJ
BR-DET
SR225 10K
SR229 0_R
SR228 0
SD28 ASD500V_SOD323_R
SR246 10K_R
SC382 1uf/10v_R
SR234 10K
SR237 10K
PM_PWRBTN-
SR240 10K
SD23 ASD500V_SOD323
SD22 ASD500V_SOD323
SD24 ASD500V_SOD323
KBSMI-
KBSCI-
SY3 8MHz_SMD
SC369 10pF/50v_NPO
SC368 10pF/50v_NPO
SD18 ASD500V_SOD323_R
SD19 ASD500V_SOD323
EC_AUXOK
CHG-LED
SR217 10K
LED_CHG-
SQ16 2N7002
ENBCHG
SR213 10K
SQ11 2N7002
SQ13 2N7002
OVERT-
MSCLK
MSDATA
PM_A20_GATE
PM_KBC_RST-
LED_SCR-
LED_NUM-
LED_CAP-
SLP_S5-
KBOUT15
KBOUT14
KBOUT13
KBOUT12
KBOUT11
KBOUT10
KBOUT9
KBOUT8
KBOUT7
KBOUT6
KBOUT5
KBOUT4
KBOUT3
KBOUT2
KBOUT1
KBOUT0
KBIN7
KBIN6
KBIN5
KBIN4
KBIN3
KBIN2
KBIN1
KBIN0
SR248 0_R
LFRAME-
PCI_RST-
LAD0
LAD1
LAD2
LAD3
LAD[0..3]
SIRQ
CLK_33_KBC
check
ECRST-
SD17 ASD500V_SOD323
SR227 10K
SC370 0.1uF/25V
ECTHERM-
SR252 10K
SC387 0.1uF/25V
SRN40D
SRN40C
SRN40B
SRN40A
SRN39D
SRN39C
SRN39B
SRN39A
10KX4_0402
ECLID-
SR250 10K_R
MAILKEY-
SR249 10K
PM_A20_GAT
SR233 10K
PM_KBC_RST
SR216 10K
CN16
DT_91-G0001-216-24_BOT
R499 10K
R501 10K
C760 0.1uF/25V
CN19
dt_91-g0001-125-04_top
Elitegroup Computer Systems
Title
16 KBC & T/P
Size Custom
Document Number 532-1-4-01
Rev 2.0
Date: Wednesday, December 22, 2004
Sheet 15 of 46

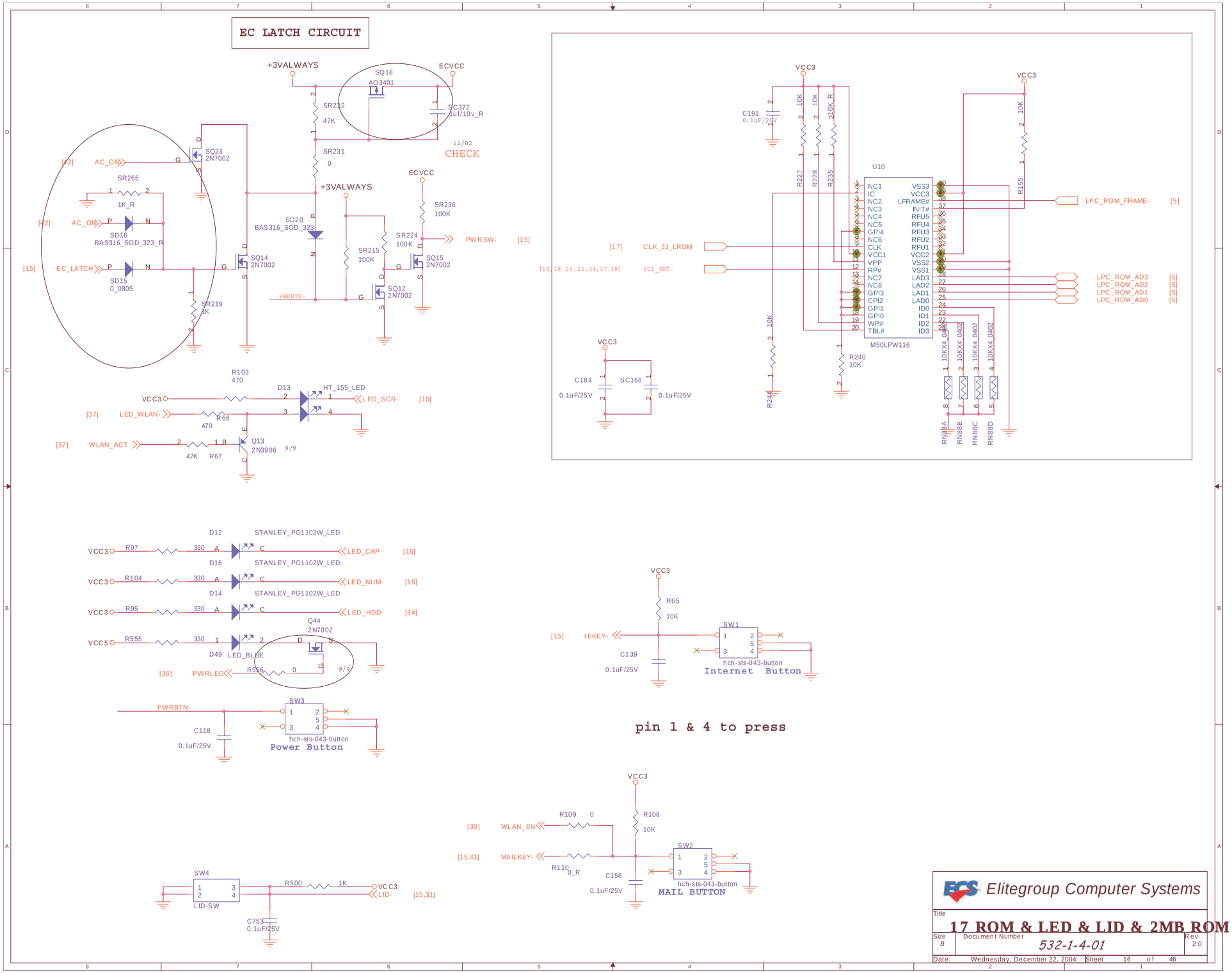


Elitegroup Computer Systems

Title: 17 ROM & LED & LID & 2MB ROM

Size: B | Document Number: 532-1-4-01 | Rev: 2.0

Date: Wednesday, December 22, 2004 | Sheet 16 of 46

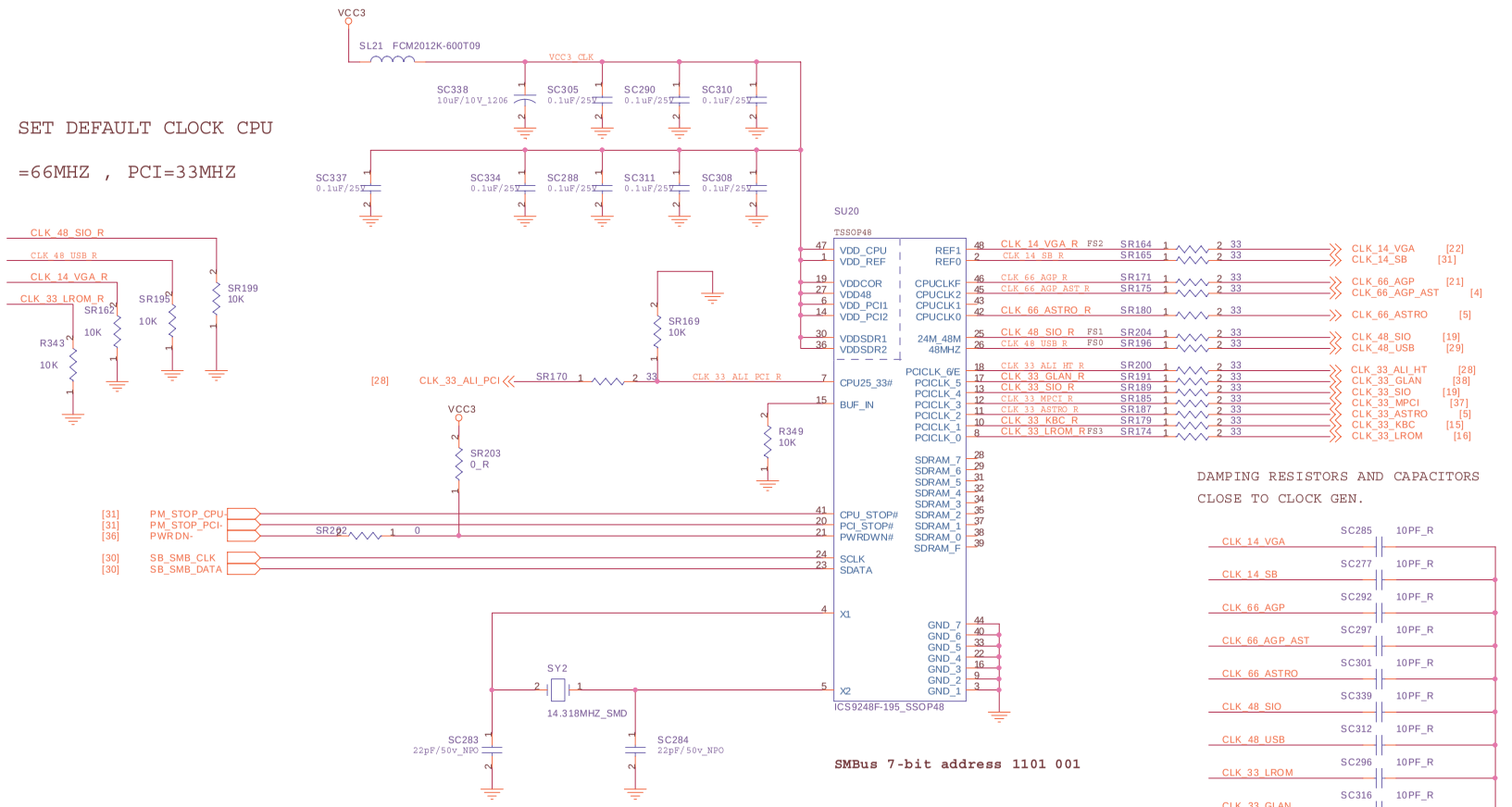


| CLK_14_SB | SPREAD SET |
|---|---|
| 0 | SPREAD OFF |
| 1 | SPREAD ON |

| CLK_33_KBC_R | SEL 24/48M# |
|---|---|
| 0 | 48MHZ |
| 1 | 24MHZ |

| CLK_33_ASTRO_R | SEL PCICLK6 |
|---|---|
| 0 | PCICLK |
| 1 | EARLY PCICLK |

Elitegroup Computer Systems

Title: CLOCK GENERATOR

Size: B | Document Number: 532-1-4-01 | Rev: 2.0

Date: Wednesday, December 22, 2004 | Sheet 17 of 46

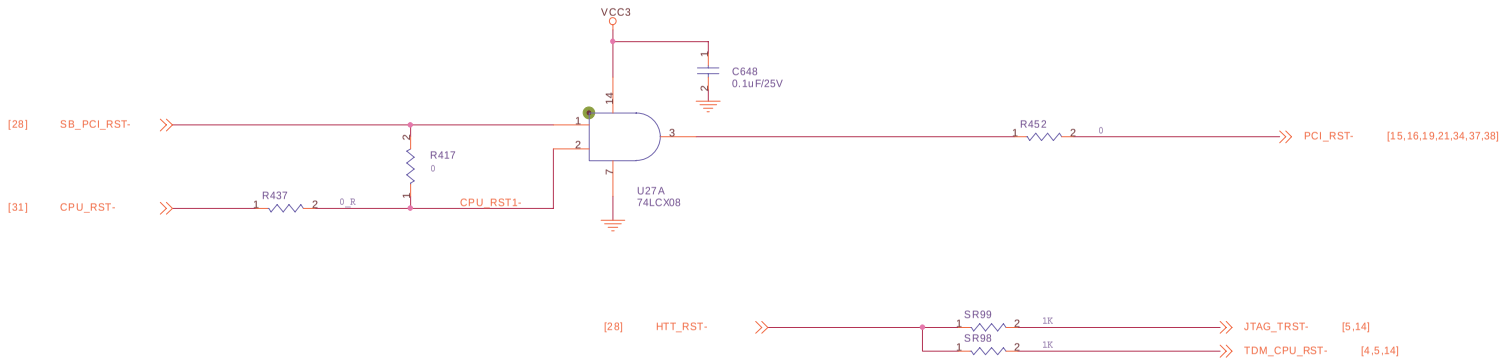


Elitegroup Computer Systems

Title **RESET**

| Size | Document Number | Rev |
|---|---|---|
| B | 532-1-4-01 | 2.0 |

Date: Wednesday, December 22, 2004 Sheet 18 of 46

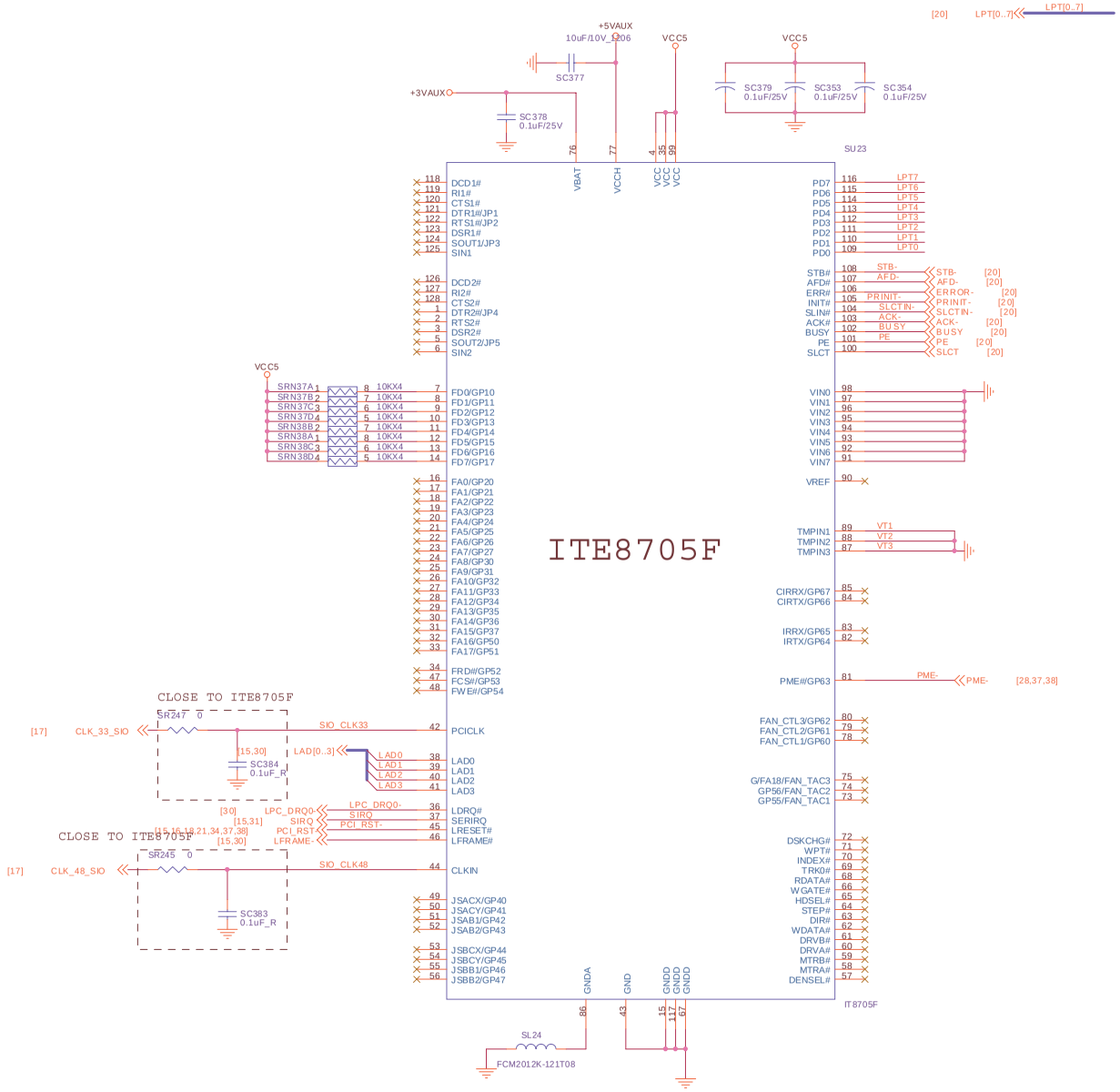


Elitegroup Computer Systems

Title: ITE 8705F

Size: B | Document Number: 532-1-4-01 | Rev: 2.0

Date: Wednesday, December 22, 2004 | Sheet 19 of 46

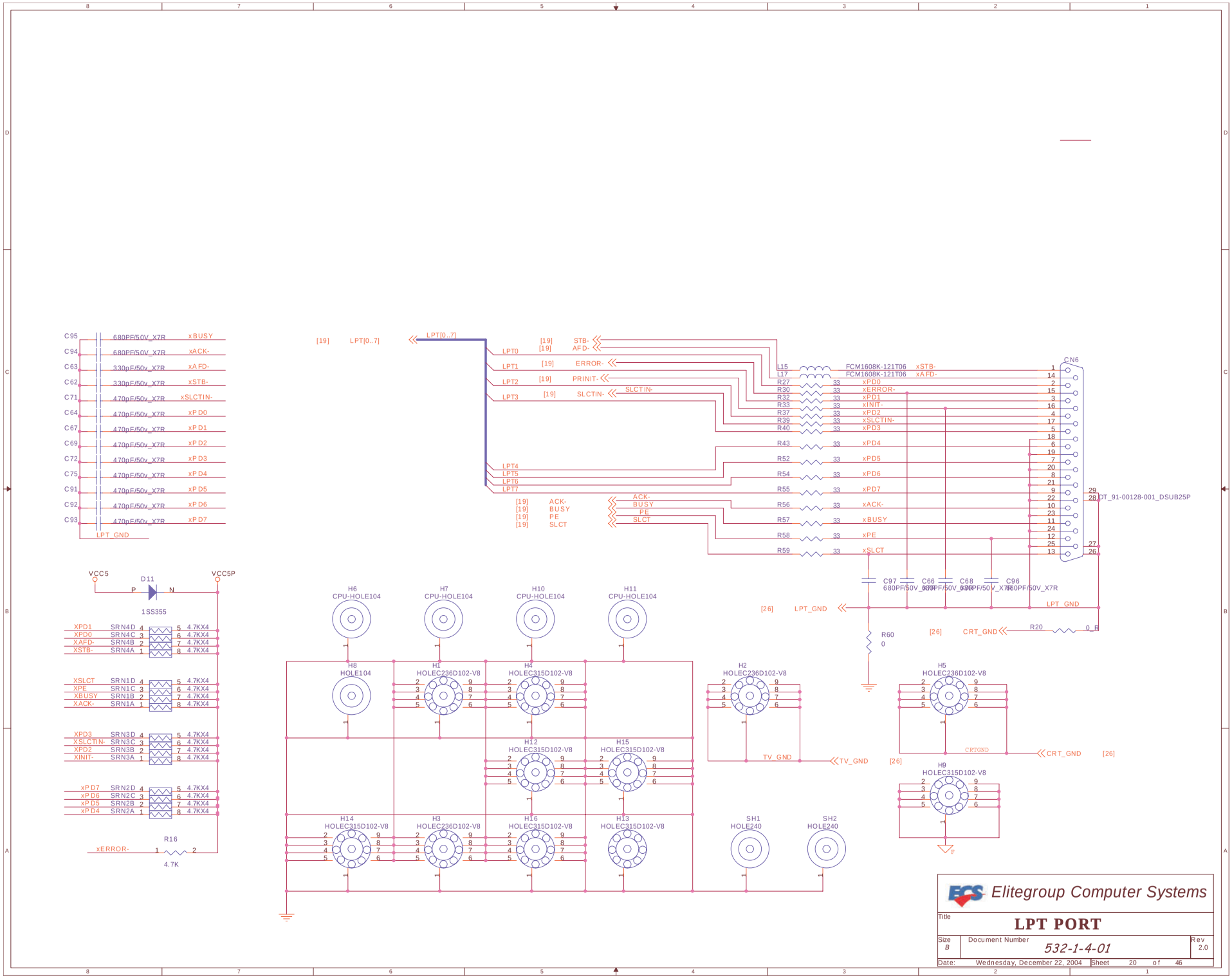
C95 680PF/50V_X7R xBUSY
C94 680PF/50V_X7R xACK-
C63 330pF/50v_X7R xAFD-
C62 330pF/50v_X7R xSTB-
C71 470pF/50v_X7R xSLCTIN-
C64 470pF/50v_X7R xPD0
C67 470pF/50v_X7R xPD1
C69 470pF/50v_X7R xPD2
C72 470pF/50v_X7R xPD3
C75 470pF/50v_X7R xPD4
C91 470pF/50v_X7R xPD5
C92 470pF/50v_X7R xPD6
C93 470pF/50v_X7R xPD7
LPT_GND
[19] LPT[0..7]
LPT[0..7]
LPT0 [19] STB-
[19] AFD-
LPT1 [19] ERROR-
LPT2 [19] PRINIT-
LPT3 [19] SLCTIN-
SLCTIN-
LPT4
LPT5
LPT6
LPT7
[19] ACK-
[19] BUSY
[19] PE
[19] SLCT
ACK-
BUSY
PE
SLCT
L15 FCM1608K-121T06 xSTB-
L17 FCM1608K-121T06 xAFD-
R27 33 xPD0
R30 33 xERROR-
R32 33 xPD1
R33 33 xINIT-
R37 33 xPD2
R39 33 xSLCTIN-
R40 33 xPD3
R43 33 xPD4
R52 33 xPD5
R54 33 xPD6
R55 33 xPD7
R56 33 xACK-
R57 33 xBUSY
R58 33 xPE
R59 33 xSLCT
CN6
DT_91-00128-001_DSUB25P
C97 680PF/50V_X7R
C66 680PF/50V_X7R
C68 680PF/50V_X7R
C96 680PF/50V_X7R
[26] LPT_GND
LPT_GND
R60 0
[26] CRT_GND
R20 0_R
VCC5
D11
P
N
1SS355
VCC5P
XPD1 SRN4D 4 5 4.7KX4
XPD0 SRN4C 3 6 4.7KX4
XAFD- SRN4B 2 7 4.7KX4
XSTB- SRN4A 1 8 4.7KX4
XSLCT SRN1D 4 5 4.7KX4
XPE SRN1C 3 6 4.7KX4
XBUSY SRN1B 2 7 4.7KX4
XACK- SRN1A 1 8 4.7KX4
XPD3 SRN3D 4 5 4.7KX4
XSLCTIN- SRN3C 3 6 4.7KX4
XPD2 SRN3B 2 7 4.7KX4
XINIT- SRN3A 1 8 4.7KX4
XPD7 SRN2D 4 5 4.7KX4
XPD6 SRN2C 3 6 4.7KX4
XPD5 SRN2B 2 7 4.7KX4
XPD4 SRN2A 1 8 4.7KX4
xERROR- R16 4.7K
H6 CPU-HOLE104
H7 CPU-HOLE104
H10 CPU-HOLE104
H11 CPU-HOLE104
H8 HOLE104
H1 HOLEC236D102-V8
H4 HOLEC315D102-V8
H2 HOLEC236D102-V8
H5 HOLEC236D102-V8
H12 HOLEC315D102-V8
H15 HOLEC315D102-V8
H9 HOLEC315D102-V8
H14 HOLEC315D102-V8
H3 HOLEC236D102-V8
H16 HOLEC315D102-V8
H13 HOLEC315D102-V8
SH1 HOLE240
SH2 HOLE240
TV_GND
[26] TV_GND
CRTGND
CRT_GND [26]
F
Elitegroup Computer Systems
Title
LPT PORT
Size B
Document Number 532-1-4-01
Rev 2.0
Date: Wednesday, December 22, 2004
Sheet 20 of 46

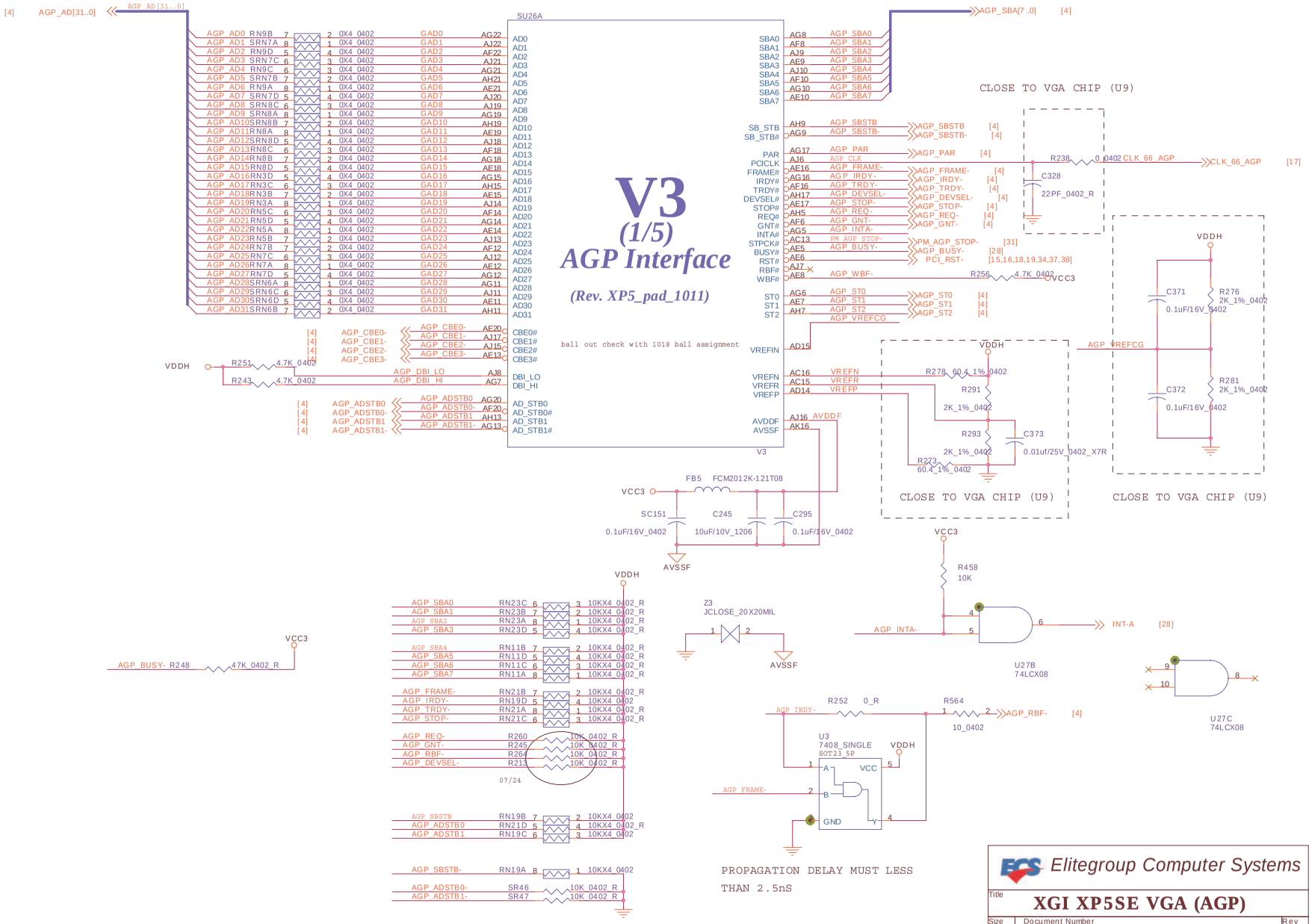


Elitegroup Computer Systems

Title: XGI XP5SE VGA (AGP)

Size: B | Document Number: 532-1-4-01 | Rev: 2.0

Date: Wednesday, December 22, 2004 | Sheet 21 of 46

Based on Volari V3 Dip Switch and Config.
Ver.2.0 Oct 03'

# PANEL ID

CAPD[11..9]

| | SYNC |
|---|---|
| 000 | 230Mhz |
| 001 | 125Mhz |
| 010 | 166Mhz |
| 011 | 215Mhz |
| 100 | 200Mhz |
| 101 | 250Mhz |
| 110 | 275Mhz |
| 111 | 300Mhz |

PANID[1..0]:(CAPD[5..4])

| | PANEL TYPE |
|---|---|
| 00 | RESERVED |
| 01 | TFT 1024x768 - 18 QDI |
| 10 | TFT 1024x768 - 18 |
| 11 | RESERVED |

## Configuration Table:

| CAPD | FUNCTION | Config(Stuff R4.7K=0) | Default |
|---|---|---|---|
| 0 | CLOCK MODE | 0: External, 1: Internal | 1: Internal |
| 1 | BUS TYPE | 0: RESERVED, 1: AGP | 1: AGP |
| 2 | ID SELECT | 0: AD17, 1: AD16 | 1: AD16 |
| 3 | BIOS | 0: Disable, 1: Enable | 0: Disable |
| 5..4 | PANEL ID TYPE | See Panel Type Table | |
| 6 | RESERVED | | |
| 8 | LCD ON/OFF | 0: OFF, 1: ON | 1: LCD ON |
| 11..9 | MEMORY CLOCK | See Table | 100: 200Mhz |
| 12 | VDDQ VOLTAGE | 0: 3.3V, 1: 1.5V | 1: 1.5V |
| 13 | DDR/SDR SELECT | 0: SDR, 1: DDR | 1: DDR |
| 7 | VIDEO RAM TYPE | 0: 2MX32, 1: 4MX32 | 1: 4MX32 |
| 15 | AGP Version | 0: AGP 3.0, 1: AGP 2.0 | 1: AGP 2.0 |

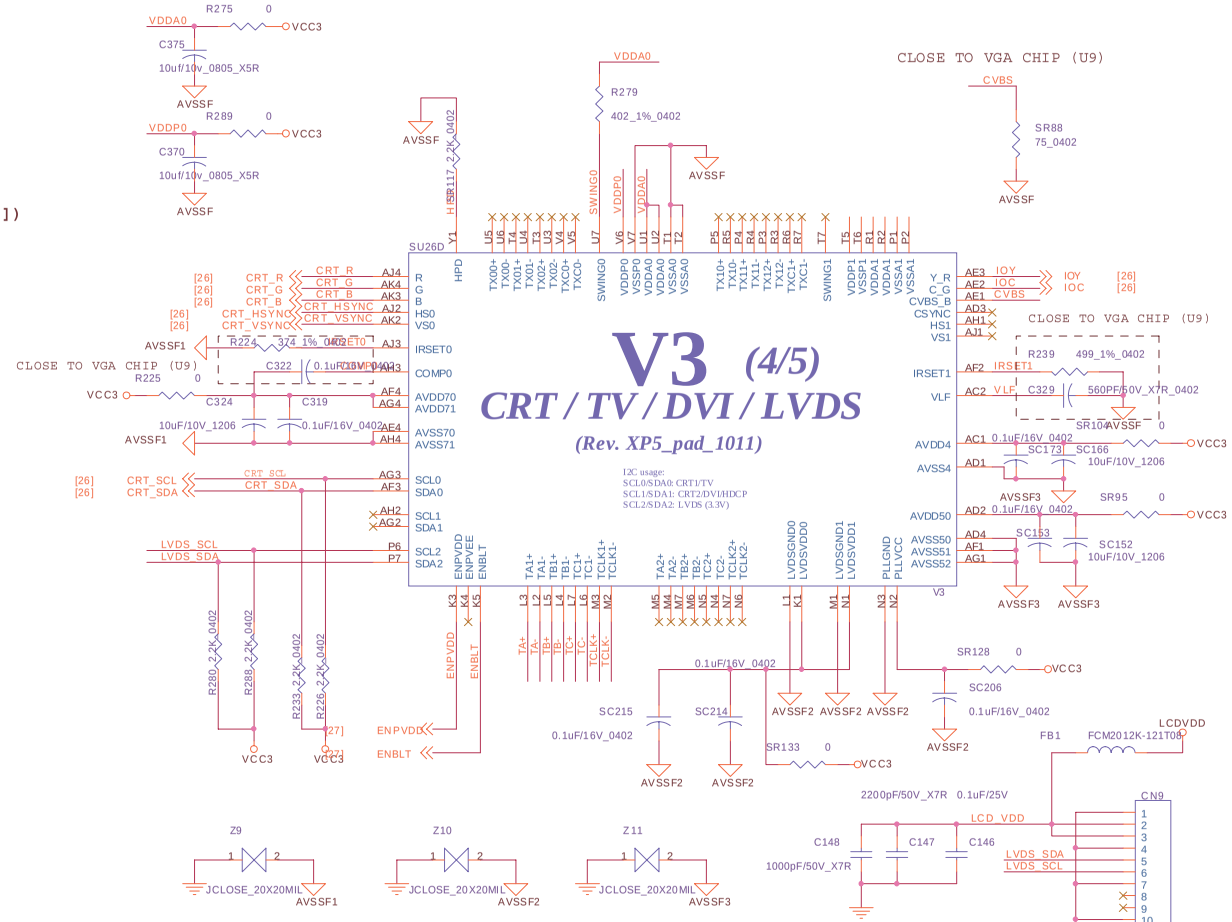


## Power on configuration

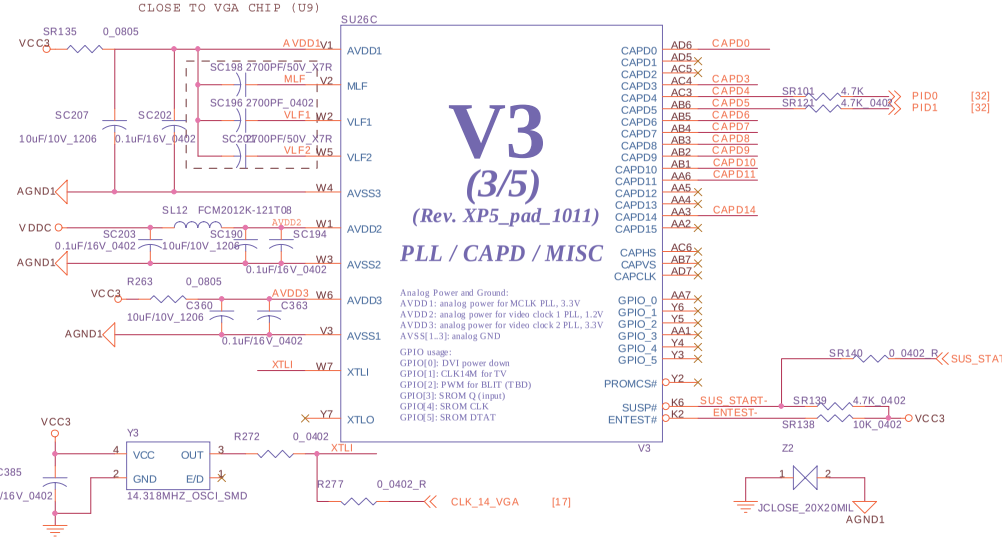


| | | |
|---|---|---|
| Elitegroup Computer Systems | | |
| Title | XGI XP5SE (LVDS/TV/CRT) | |
| Size B | Document Number 532-1-4-01 | Rev 2.0 |
| Date: Wednesday, December 22, 2004 | Sheet 22 of 46 | |

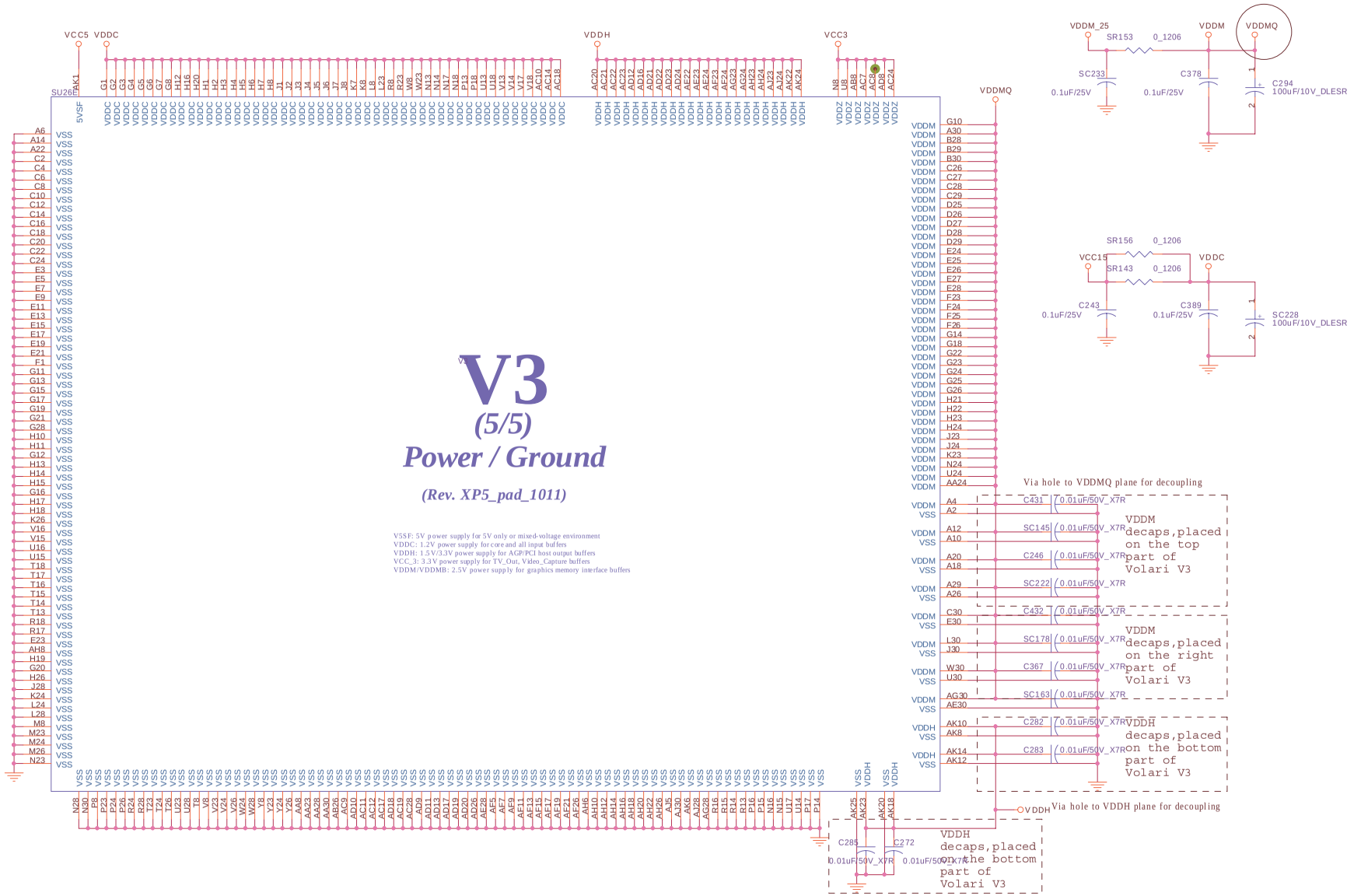


Elitegroup Computer Systems

Title: XGI XP5SE VGA (POWER)

Size: Custom | Document Number: 532-1-4-01 | Rev: 2.0

Date: Monday, December 20, 2004 | Sheet 23 of 46

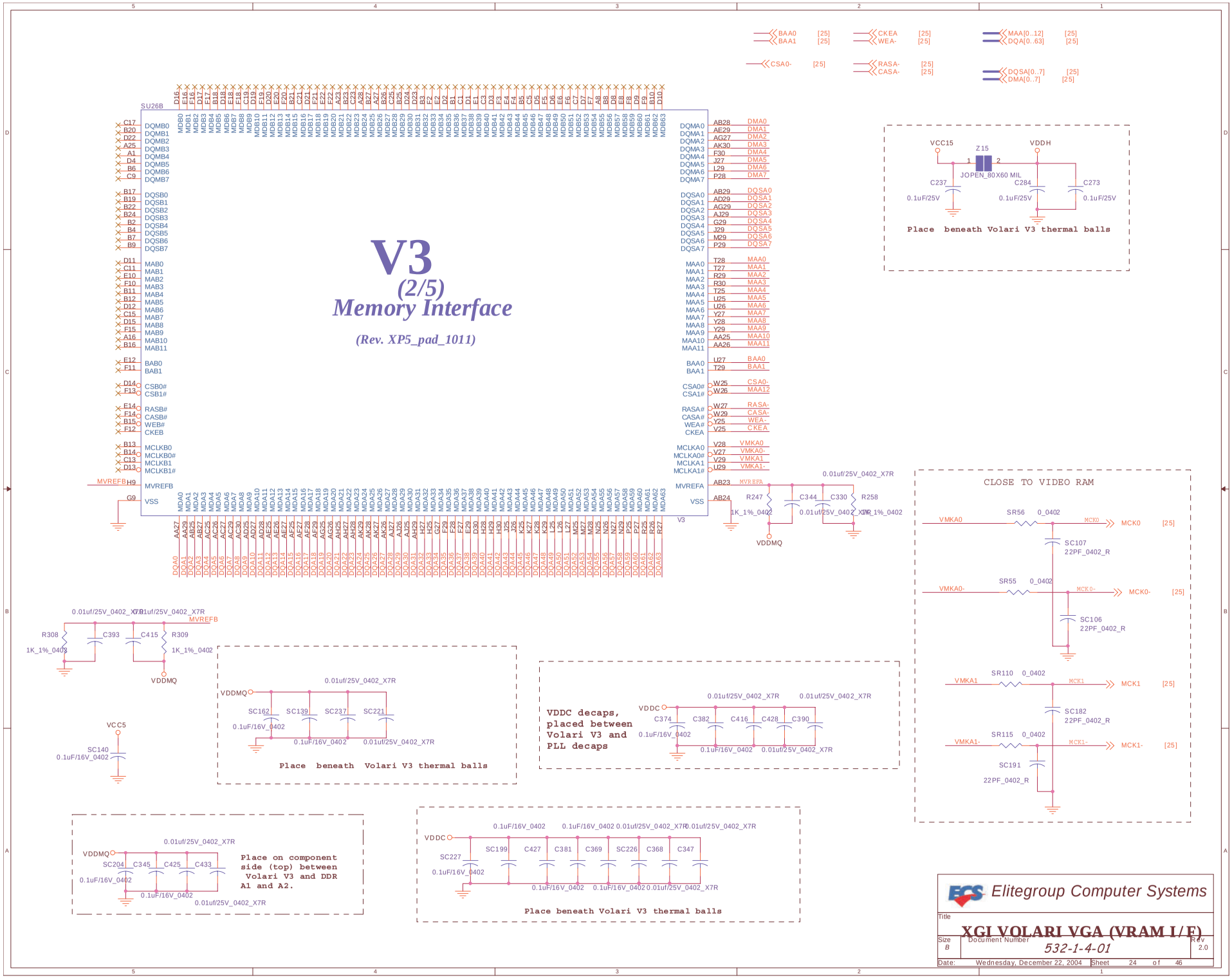
V3
(2/5)
Memory Interface
(Rev. XP5_pad_1011)
SU26B
BAA0 [25]
BAA1 [25]
CSA0- [25]
CKEA [25]
WEA- [25]
RASA- [25]
CASA- [25]
MAA[0..12] [25]
DQA[0..63] [25]
DQSA[0..7] [25]
DMA[0..7] [25]
VCC15
Z15
VDDH
JOPEN_80X60 MIL
C237
C284
C273
0.1uF/25V
Place beneath Volari V3 thermal balls
R247
C344
C330
R258
1K_1%_0402
0.01uf/25V_0402_X7R
VDDMQ
MVREFA
MVREFB
R308
C393
C415
R309
VCC5
SC140
0.1uF/16V_0402
SC162
SC139
SC237
SC221
Place beneath Volari V3 thermal balls
VDDC decaps, placed between Volari V3 and PLL decaps
VDDC
C374
C382
C416
C428
C390
CLOSE TO VIDEO RAM
VMKA0
SR56
0_0402
MCK0
SC107
22PF_0402_R
VMKA0-
SR55
MCK0-
SC106
VMKA1
SR110
MCK1
SC182
VMKA1-
SR115
MCK1-
SC191
Place on component side (top) between Volari V3 and DDR A1 and A2.
SC204
C345
C425
C433
SC227
SC199
C427
C381
C369
SC226
C368
C347
Place beneath Volari V3 thermal balls
Elitegroup Computer Systems
Title
XGI VOLARI VGA (VRAM I/F)
Size B
Document Number
532-1-4-01
Rev 2.0
Date: Wednesday, December 22, 2004
Sheet 24 of 46

# Port A 2M/4M x 32 DDRs

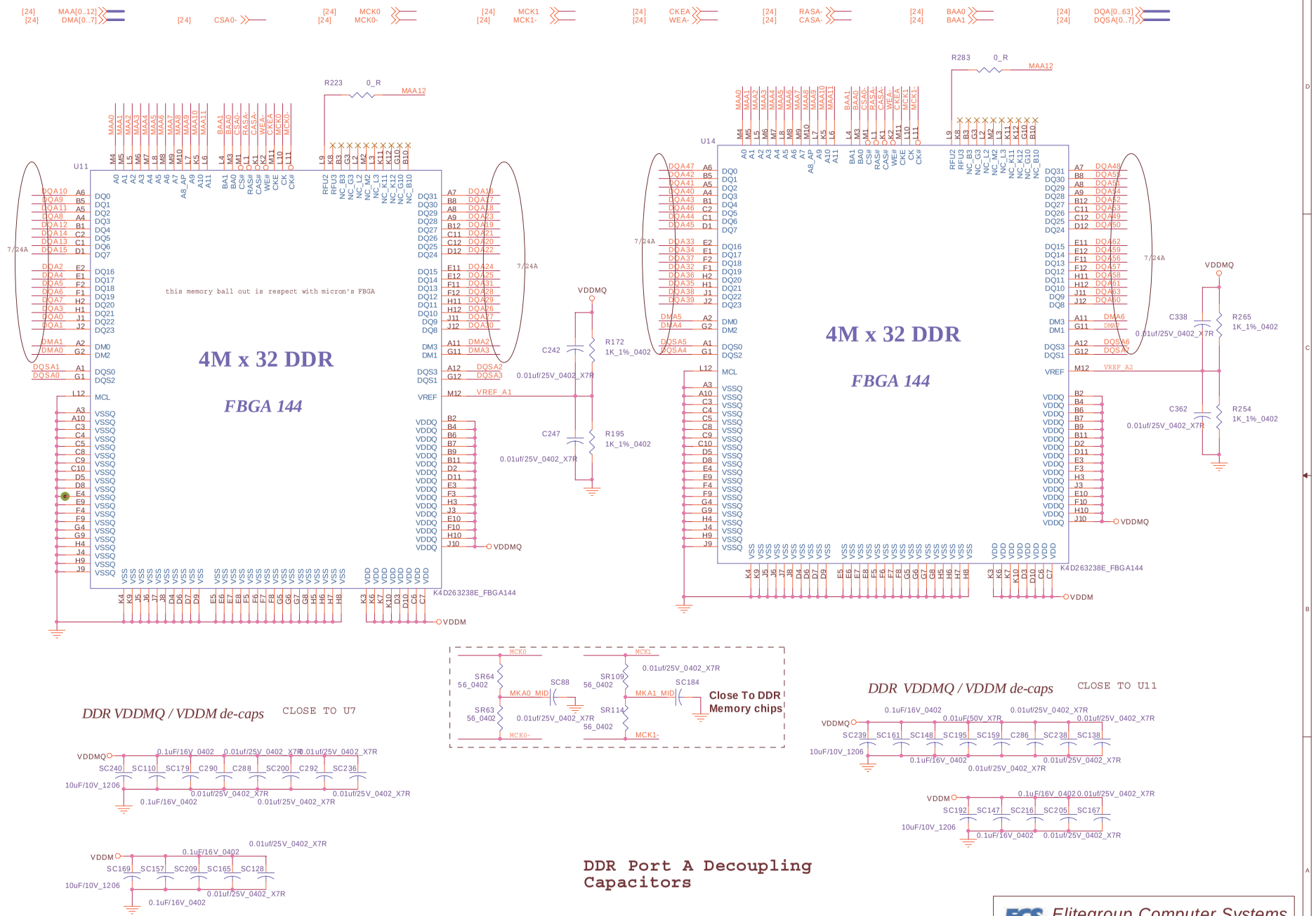


DDR Port A Decoupling Capacitors

Elitegroup Computer Systems

Title: XGI Volari V3(VRAM)

Size: B | Document Number: 532-1-4-01 | Rev: 2.0

Date: Wednesday, December 22, 2004 | Sheet 25 of 46

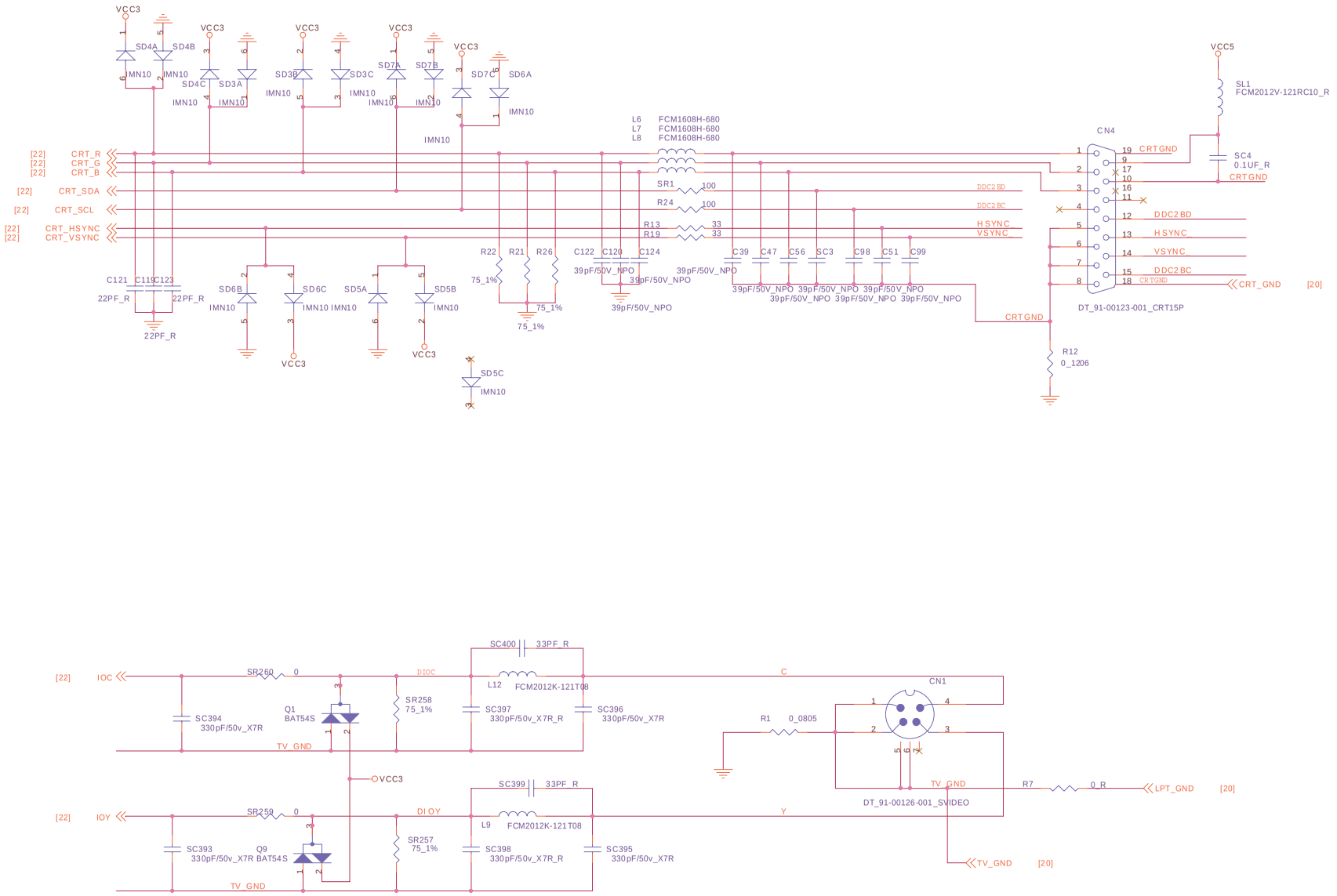


Elitegroup Computer Systems

Title: CRT CON. & TV-OUT

| Size | Document Number | Rev |
|---|---|---|
| B | 532-1-4-01 | 2.0 |

Date: Thursday, December 23, 2004 Sheet 26 of 46

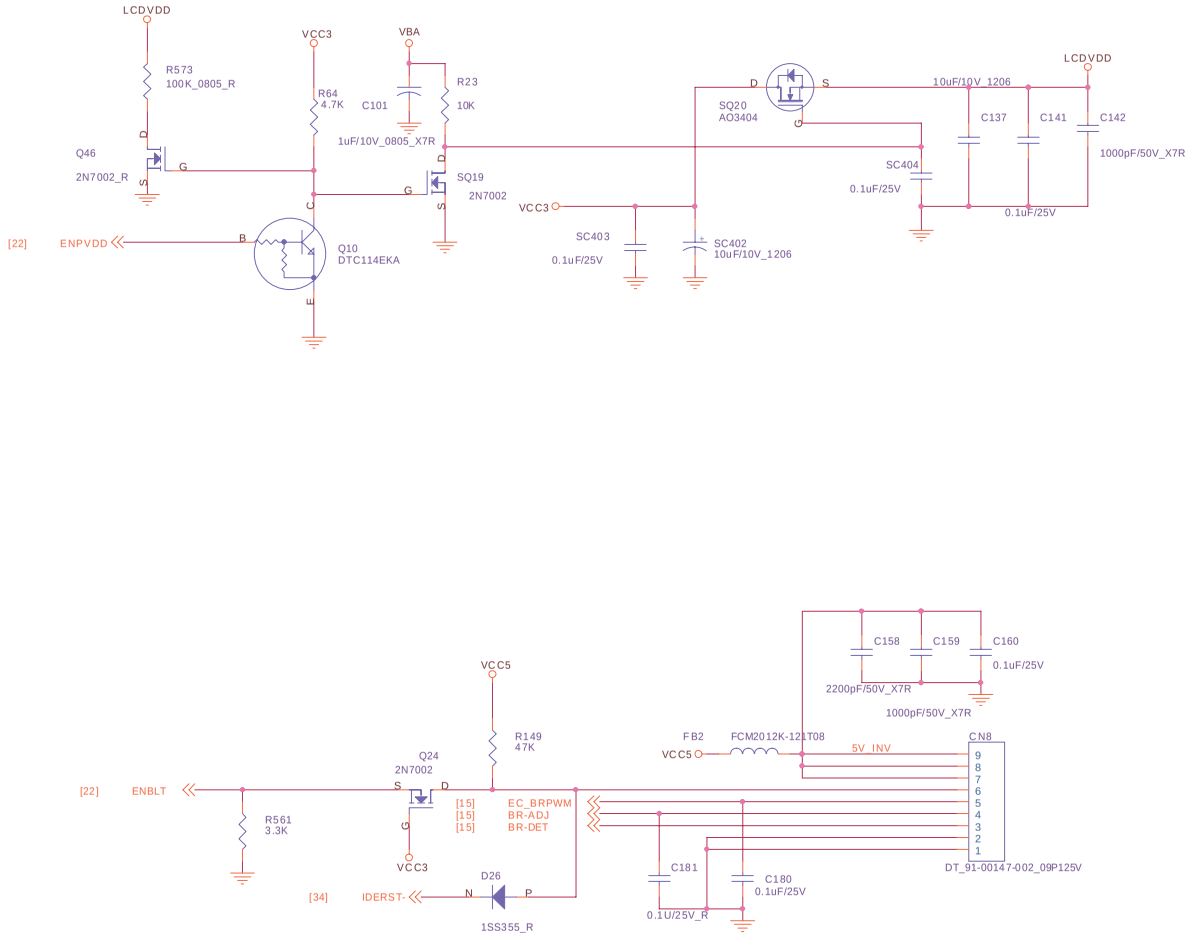


Elitegroup Computer Systems

Title

# LCD POWER & BL CONTROL

| Size | Document Number | Rev |
|---|---|---|
| B | 532-1-4-01 | 2.0 |

Date: Wednesday, December 22, 2004 Sheet 27 of 46

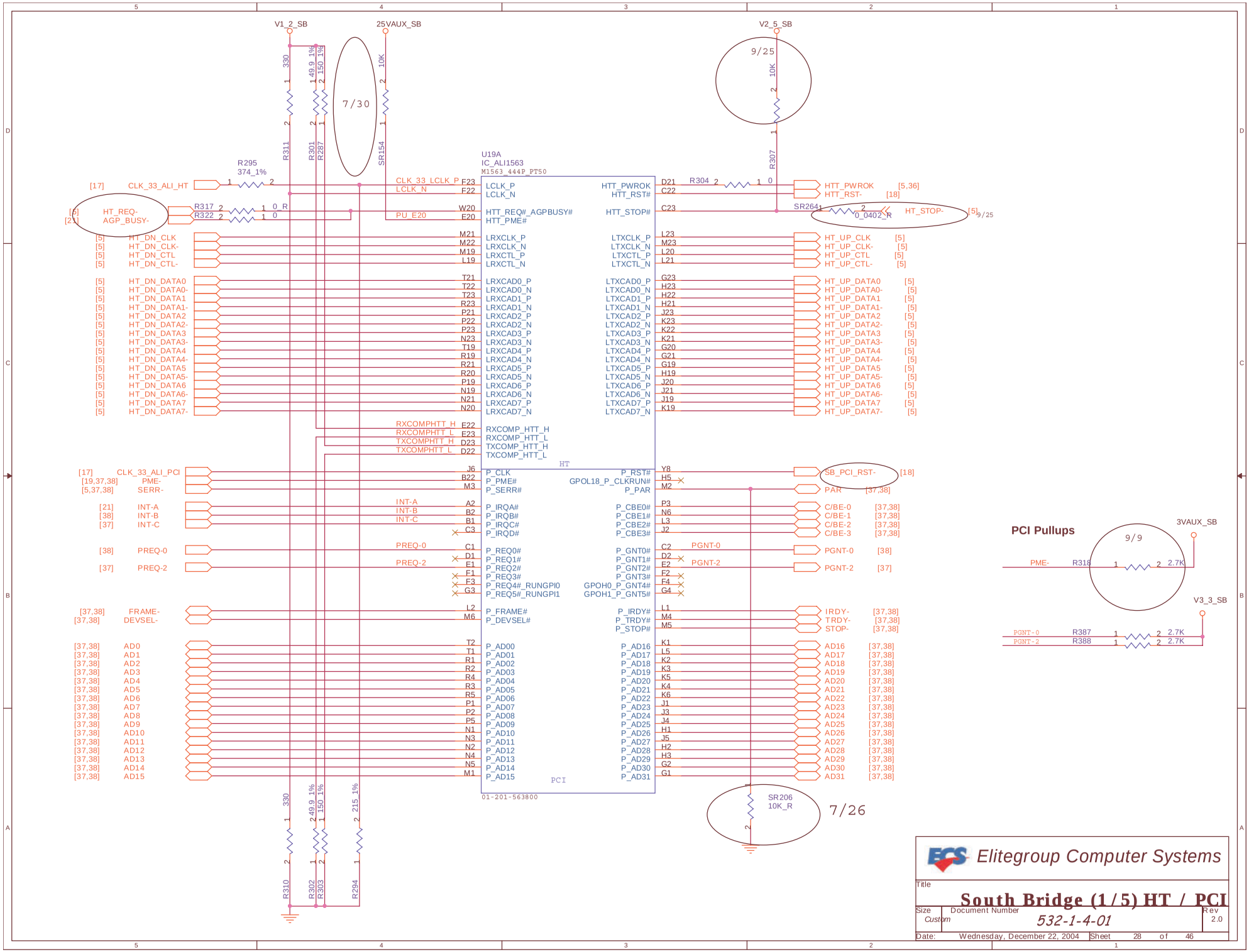

V1_2_SB
25VAUX_SB
V2_5_SB
7/30
9/25
U19A
IC_ALI1563
M1563_444P_PT50
HT
PCI
01-201-563800
7/26
PCI Pullups
3VAUX_SB
V3_3_SB
9/9
Elitegroup Computer Systems
Title
South Bridge (1/5) HT / PCI
Size
Custom
Document Number
532-1-4-01
Rev
2.0
Date: Wednesday, December 22, 2004
Sheet 28 of 46

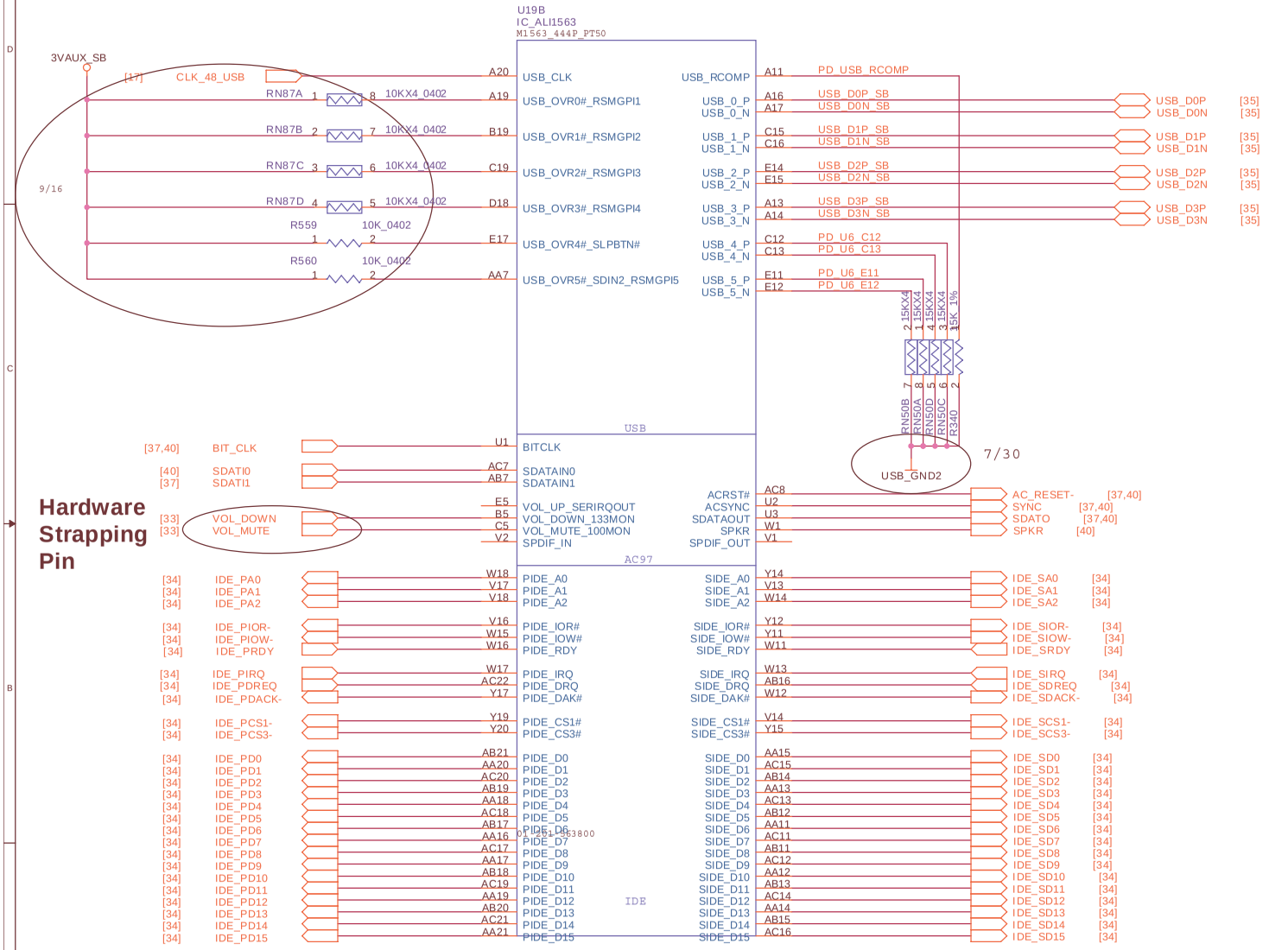


Elitegroup Computer Systems

Title: **South Bridge (2/5) USB / IDE / AUDIO**

| Size | Document Number | Rev |
|---|---|---|
| Custom | 532-1-4-01 | 2.0 |

Date: Wednesday, December 22, 2004 | Sheet 29 of 46

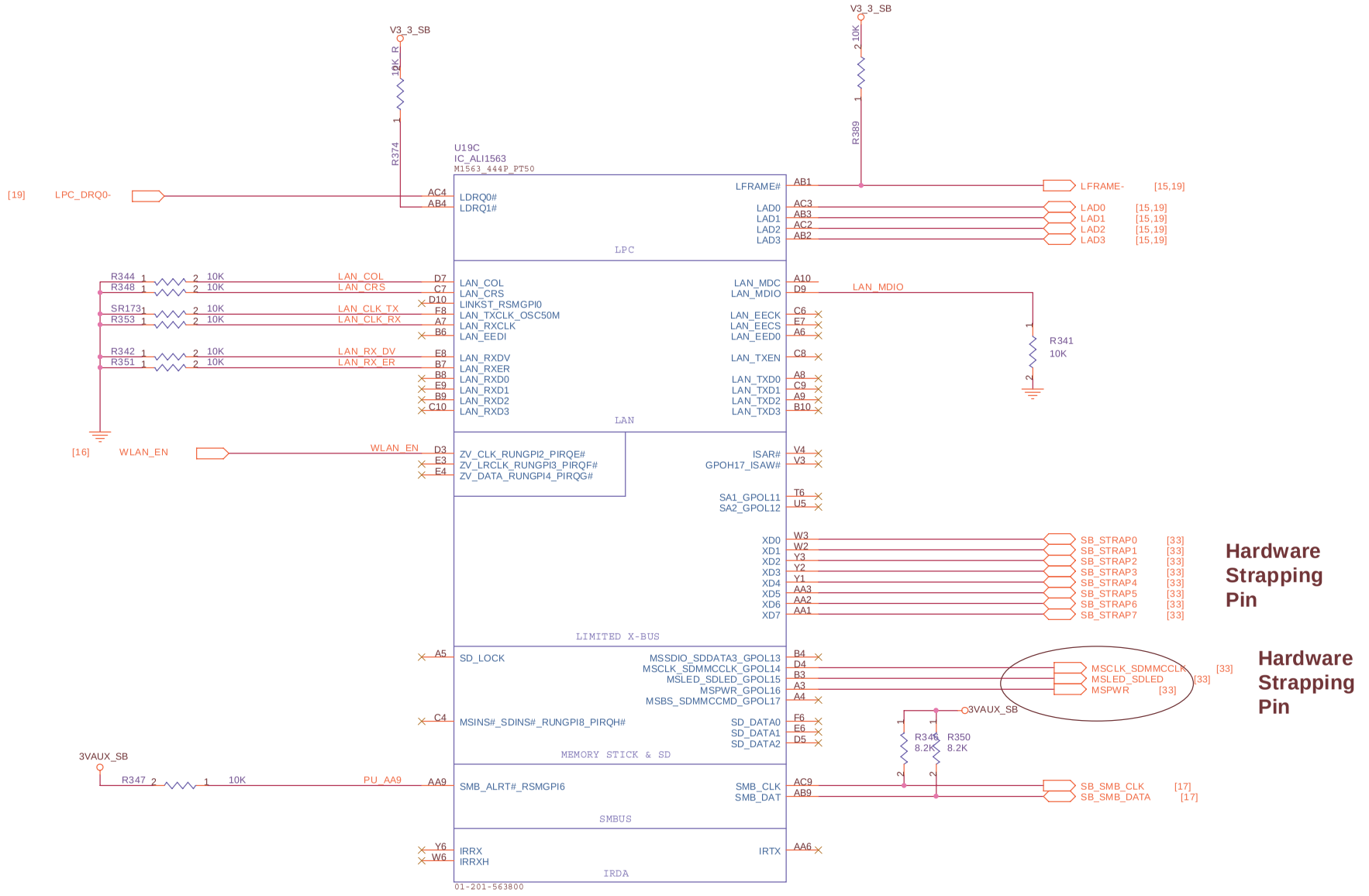


Elitegroup Computer Systems

Title: **South Bridge (3/5) LPC / SMBUS**

| Size | Document Number | Rev |
|---|---|---|
| Custom | 532-1-4-01 | 2.0 |

Date: Wednesday, December 22, 2004 Sheet 30 of 46

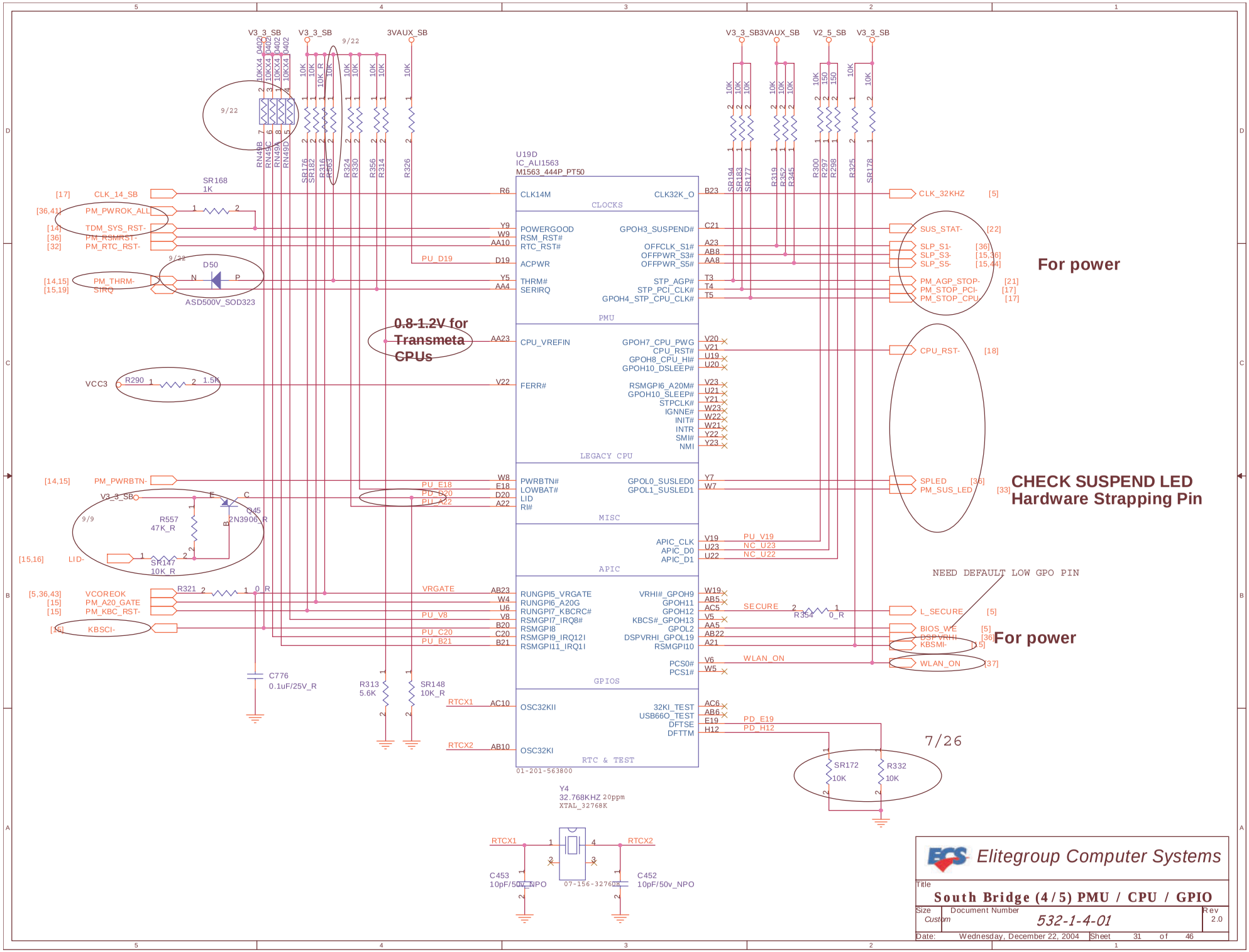

U19D
IC_ALI1563
M1563_444P_PT50
CLOCKS
PMU
LEGACY CPU
MISC
APIC
GPIOS
RTC & TEST
01-201-563800
0.8-1.2V for Transmeta CPUs
For power
CHECK SUSPEND LED
Hardware Strapping Pin
NEED DEFAULT LOW GPO PIN
For power
7/26
Y4
32.768KHZ 20ppm
XTAL_32768K
07-156-327608
Elitegroup Computer Systems
Title
South Bridge (4/5) PMU / CPU / GPIO
Size
Custom
Document Number
532-1-4-01
Rev
2.0
Date: Wednesday, December 22, 2004
Sheet 31 of 46

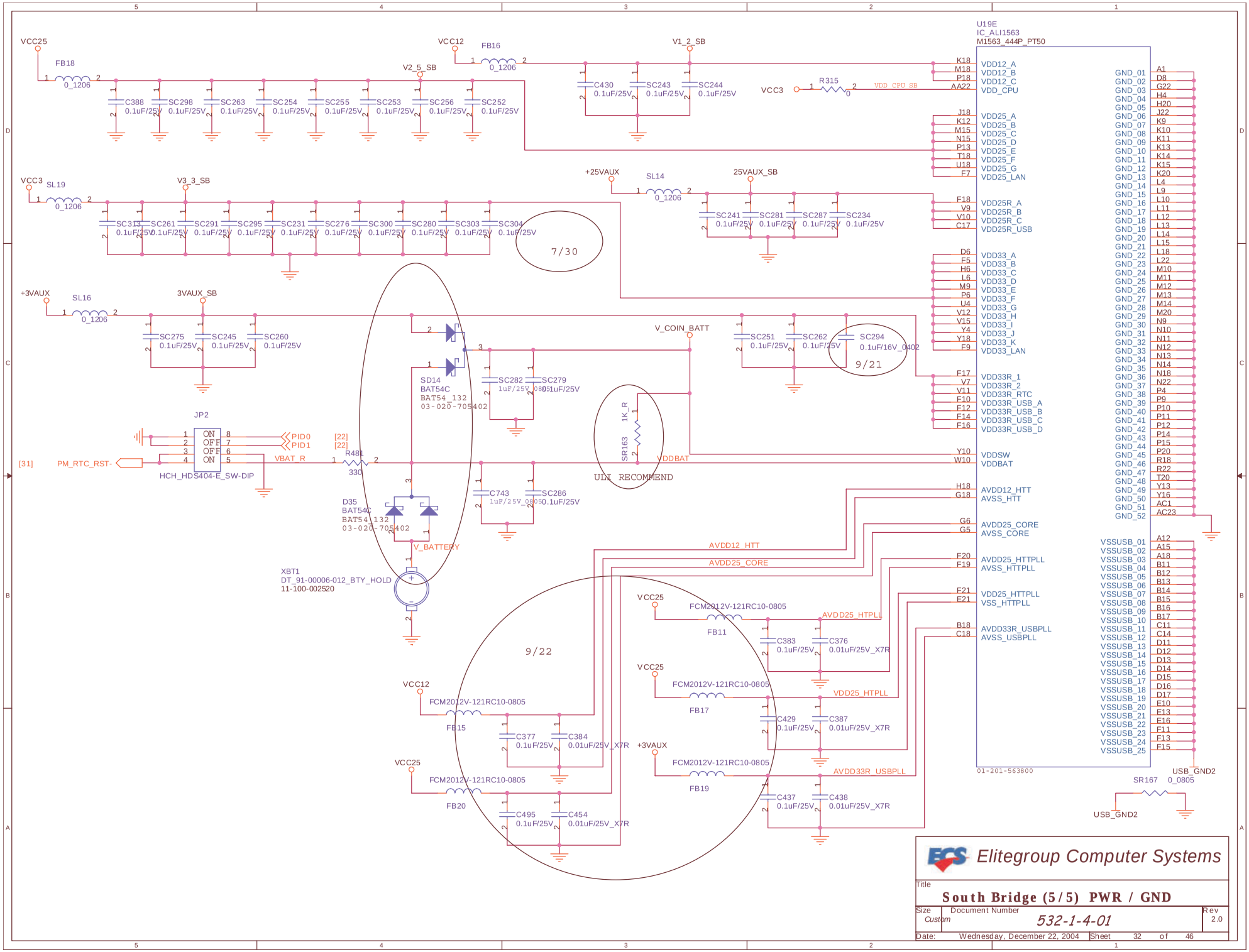
U19E
IC_ALI1563
M1563_444P_PT50
VCC25
FB18
0_1206
C388 0.1uF/25V
SC298 0.1uF/25V
SC263 0.1uF/25V
SC254 0.1uF/25V
SC255 0.1uF/25V
SC253 0.1uF/25V
SC256 0.1uF/25V
SC252 0.1uF/25V
VCC12
FB16
V2_5_SB
V1_2_SB
C430 0.1uF/25V
SC243 0.1uF/25V
SC244 0.1uF/25V
VCC3
R315
VDD_CPU_SB
VCC3
SL19
V3_3_SB
SC313 0.1uF/25V
SC261 0.1uF/25V
SC291 0.1uF/25V
SC295 0.1uF/25V
SC231 0.1uF/25V
SC276 0.1uF/25V
SC300 0.1uF/25V
SC280 0.1uF/25V
SC303 0.1uF/25V
SC304 0.1uF/25V
7/30
+25VAUX
SL14
25VAUX_SB
SC241 0.1uF/25V
SC281 0.1uF/25V
SC287 0.1uF/25V
SC234 0.1uF/25V
+3VAUX
SL16
3VAUX_SB
SC275 0.1uF/25V
SC245 0.1uF/25V
SC260 0.1uF/25V
V_COIN_BATT
SC251 0.1uF/25V
SC262 0.1uF/25V
SC294 0.1uF/16V_0402
9/21
SD14
BAT54C
BAT54_132
03-020-705402
SC282 1uF/25V_0805
SC279 0.1uF/25V
JP2
ON
OFF
OFF
ON
PID0
PID1
[22]
[22]
[31]
PM_RTC_RST-
VBAT_R
R481
330
HCH_HDS404-E_SW-DIP
SR163
1K_R
VDDBAT
ULI RECOMMEND
C743 1uF/25V_0805
SC286 0.1uF/25V
D35
BAT54C
BAT54_132
03-020-705402
V_BATTERY
XBT1
DT_91-00006-012_BTY_HOLD
11-100-002520
AVDD12_HTT
AVDD25_CORE
VCC25
FCM2012V-121RC10-0805
FB11
AVDD25_HTPLL
C383 0.1uF/25V
C376 0.01uF/25V_X7R
9/22
VCC25
FCM2012V-121RC10-0805
FB17
VDD25_HTPLL
C429 0.1uF/25V
C387 0.01uF/25V_X7R
VCC12
FCM2012V-121RC10-0805
FB15
C377 0.1uF/25V
C384 0.01uF/25V_X7R
+3VAUX
FCM2012V-121RC10-0805
FB19
AVDD33R_USBPLL
C437 0.1uF/25V
C438 0.01uF/25V_X7R
VCC25
FCM2012V-121RC10-0805
FB20
C495 0.1uF/25V
C454 0.01uF/25V_X7R
K18 VDD12_A
M18 VDD12_B
P18 VDD12_C
AA22 VDD_CPU
J18 VDD25_A
K12 VDD25_B
M15 VDD25_C
N15 VDD25_D
P13 VDD25_E
T18 VDD25_F
U18 VDD25_G
F7 VDD25_LAN
F18 VDD25R_A
V9 VDD25R_B
V10 VDD25R_C
C17 VDD25R_USB
D6 VDD33_A
F5 VDD33_B
H6 VDD33_C
L6 VDD33_D
M9 VDD33_E
P6 VDD33_F
U4 VDD33_G
V12 VDD33_H
V15 VDD33_I
Y4 VDD33_J
Y18 VDD33_K
F9 VDD33_LAN
F17 VDD33R_1
V7 VDD33R_2
V11 VDD33R_RTC
E10 VDD33R_USB_A
E12 VDD33R_USB_B
E14 VDD33R_USB_C
F16 VDD33R_USB_D
Y10 VDDSW
W10 VDDBAT
H18 AVDD12_HTT
G18 AVSS_HTT
G6 AVDD25_CORE
G5 AVSS_CORE
F20 AVDD25_HTTPLL
F19 AVSS_HTTPLL
F21 VDD25_HTTPLL
E21 VSS_HTTPLL
B18 AVDD33R_USBPLL
C18 AVSS_USBPLL
GND_01 A1
GND_02 D8
GND_03 G22
GND_04 H4
GND_05 H20
GND_06 J22
GND_07 K9
GND_08 K10
GND_09 K11
GND_10 K13
GND_11 K14
GND_12 K15
GND_13 K20
GND_14 L4
GND_15 L9
GND_16 L10
GND_17 L11
GND_18 L12
GND_19 L13
GND_20 L14
GND_21 L15
GND_22 L18
GND_23 L22
GND_24 M10
GND_25 M11
GND_26 M12
GND_27 M13
GND_28 M14
GND_29 M20
GND_30 N9
GND_31 N10
GND_32 N11
GND_33 N12
GND_34 N13
GND_35 N14
GND_36 N18
GND_37 N22
GND_38 P4
GND_39 P9
GND_40 P10
GND_41 P11
GND_42 P12
GND_43 P14
GND_44 P15
GND_45 P20
GND_46 R18
GND_47 R22
GND_48 T20
GND_49 Y13
GND_50 Y16
GND_51 AC1
GND_52 AC23
VSSUSB_01 A12
VSSUSB_02 A15
VSSUSB_03 A18
VSSUSB_04 B11
VSSUSB_05 B12
VSSUSB_06 B13
VSSUSB_07 B14
VSSUSB_08 B15
VSSUSB_09 B16
VSSUSB_10 B17
VSSUSB_11 C11
VSSUSB_12 C14
VSSUSB_13 D11
VSSUSB_14 D12
VSSUSB_15 D13
VSSUSB_16 D14
VSSUSB_17 D15
VSSUSB_18 D16
VSSUSB_19 D17
VSSUSB_20 E10
VSSUSB_21 E13
VSSUSB_22 E16
VSSUSB_23 E11
VSSUSB_24 F13
VSSUSB_25 F15
01-201-563800
USB_GND2
SR167
0_0805
USB_GND2
Elitegroup Computer Systems
Title
South Bridge (5/5) PWR / GND
Size
Custom
Document Number
532-1-4-01
Rev
2.0
Date: Wednesday, December 22, 2004
Sheet 32 of 46

| Pin Name | External Pull-low/high Settings | Function Description | Corresponding Status Register and Value |
|---|---|---|---|
| PM_SUS_LED | L | **Normal Operation Mode** | **Default** |
| | H | Full Chip 32K clock Test Mode Enabled (32K Input Test mode from 32K Clock Test input pin) | |
| XD[0] | L | Full chip debug mode enabled to bypass internal bus to PCI slot | |
| | H | Normal Operation mode | **Default** |
| XD[1] | L | UART/KBC test mode enabled if SUSLED is pulled high for chip test mode. | |
| | H | Normal Operation Mode | **Default** |
| XD[2] | L | Full chip simulation mode enabled to shorten reset time for simulation. | |
| | H | Normal Operation Mode | **Default** |
| XD[3] | L | Jumper-less Mode Enabled. The A20M#, IGNNE#, INTR, and NMI will be used as the CPU frequency strap during the reset sequence | |
| | H | Jumper-less Mode Disabled. The A20M#, IGNNE#, INTR, and NMI will not be used as the CPU frequency strap during the reset sequence. These signals will work as the original function (inactive) during the reset period. | **Default** |
| XD[5:4] | LL | Full chip core PLL internal bus clock setting ALI Reserved (66MHz) | |
| | LH | 33MHz | |
| | HL | 66MHz | |
| | HH | 100MHz | **Default** |
| XD[6] | L | Full chip pattern testing mode enabled. | |
| | H | Normal Operation Mode | **Default** |
| XD[7] | L | External PCI bus type select to BUS0 | |
| | H | External PCI bus type select to BUSN | **Default** |
| VOLUME_DOWN | L | Parallel ROM multiplxed feature supported. (This is reserved for ALI internal use only) | |
| | H | Normal Operation. (No parallel ROM multiplexed feature supported) | |
| VOLUME_MUTE | L | Non-x86 Boot ROM Address Load Mechanism supported. (This is reserved for ALI Internal use only) | |
| | H | Normal Operation | |
| | HTT PLL test register setting | | |
| MSCK | L/H | T[7] | |
| SMLED | L/H | T[0] | |
| MSPWR | L/H | T[1] | |

FROM SECTION 2.4 OF THE 1563 DATA SHEET

## Hardware Strapping Pin

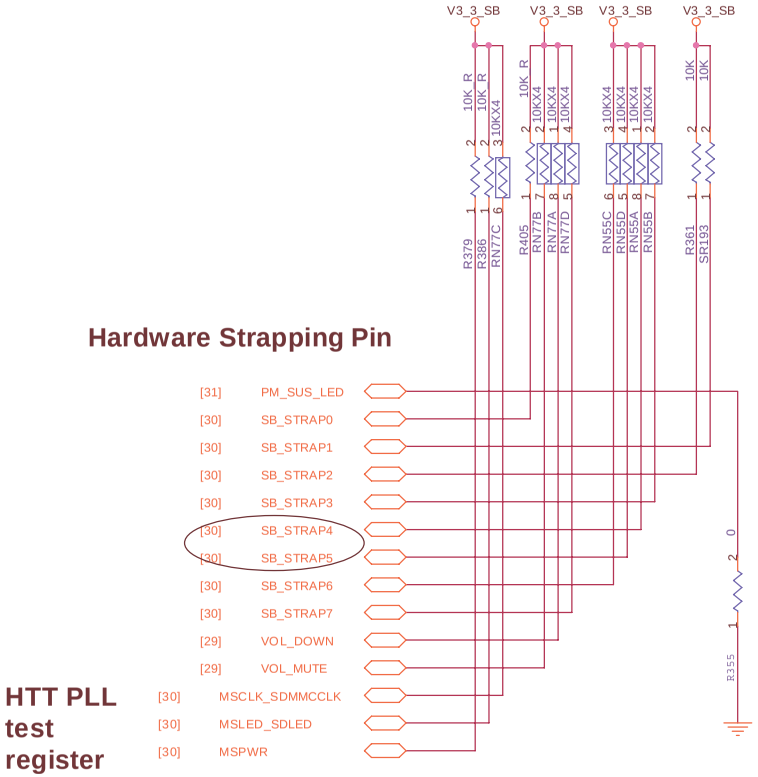


**HTT PLL test register setting**

Elitegroup Computer Systems

Title: **SB STRAP SETTING**

Size: Custom | Document Number: 532-1-4-01 | Rev: 2.0

Date: Wednesday, December 22, 2004 | Sheet 33 of 46

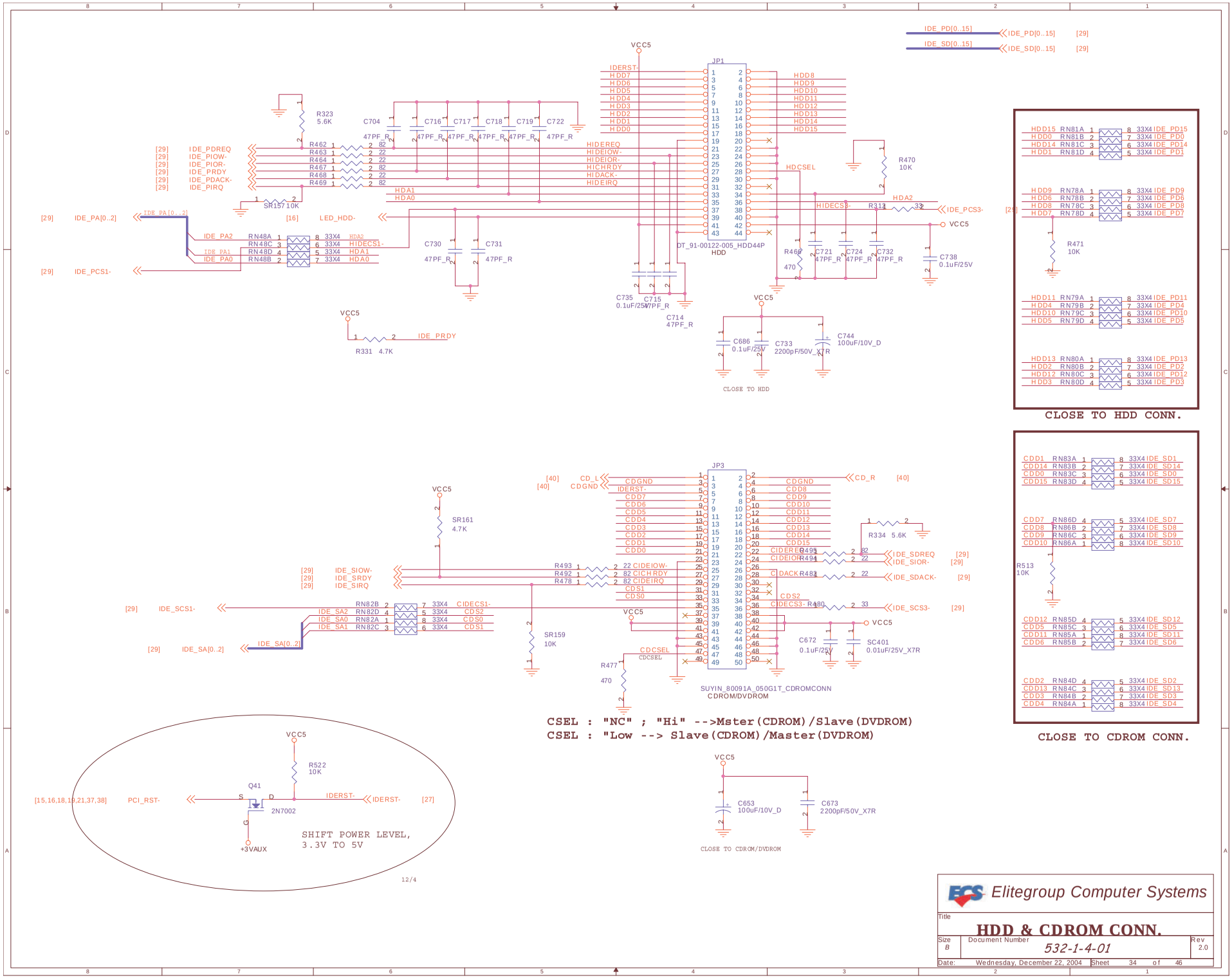
JP1
DT_91-00122-005_HDD44P
HDD
JP3
SUYIN_80091A_050G1T_CDROMCONN
CDROM/DVDROM
CLOSE TO HDD
CLOSE TO HDD CONN.
CLOSE TO CDROM CONN.
CLOSE TO CDROM/DVDROM
CSEL : "NC" ; "Hi" -->Mster(CDROM)/Slave(DVDROM)
CSEL : "Low --> Slave(CDROM)/Master(DVDROM)
SHIFT POWER LEVEL,
3.3V TO 5V
Elitegroup Computer Systems
Title
HDD & CDROM CONN.
Size B
Document Number 532-1-4-01
Rev 2.0
Date: Wednesday, December 22, 2004
Sheet 34 of 46

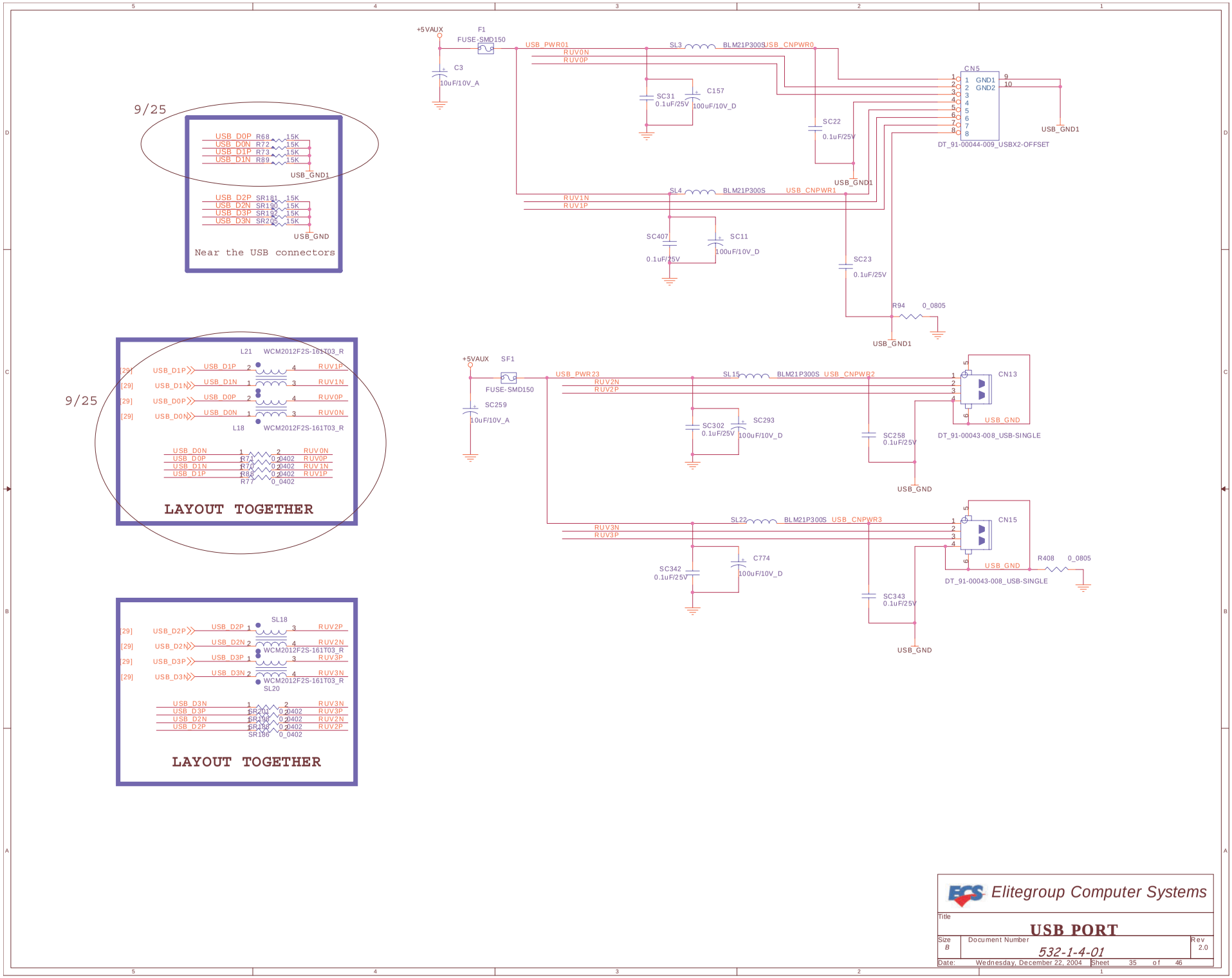
9/25
USB_D0P R68 15K
USB_D0N R72 15K
USB_D1P R73 15K
USB_D1N R89 15K
USB_GND1
USB_D2P SR181 15K
USB_D2N SR190 15K
USB_D3P SR192 15K
USB_D3N SR205 15K
USB_GND
Near the USB connectors
+5VAUX
F1
FUSE-SMD150
C3
10uF/10V_A
USB_PWR01
RUV0N
RUV0P
SL3
BLM21P300S
USB_CNPWR0
SC31
0.1uF/25V
C157
100uF/10V_D
SC22
0.1uF/25V
CN5
GND1
GND2
DT_91-00044-009_USBX2-OFFSET
USB_GND1
RUV1N
RUV1P
SL4
BLM21P300S
USB_CNPWR1
SC407
0.1uF/25V
SC11
100uF/10V_D
SC23
0.1uF/25V
R94 0_0805
USB_GND1
9/25
L21 WCM2012F2S-161T03_R
[29] USB_D1P USB_D1P RUV1P
[29] USB_D1N USB_D1N RUV1N
[29] USB_D0P USB_D0P RUV0P
[29] USB_D0N USB_D0N RUV0N
L18 WCM2012F2S-161T03_R
USB_D0N R74 0_0402 RUV0N
USB_D0P R70 0_0402 RUV0P
USB_D1N R88 0_0402 RUV1N
USB_D1P R77 0_0402 RUV1P
LAYOUT TOGETHER
+5VAUX
SF1
FUSE-SMD150
SC259
10uF/10V_A
USB_PWR23
RUV2N
RUV2P
SL15
BLM21P300S
USB_CNPWR2
CN13
USB_GND
DT_91-00043-008_USB-SINGLE
SC302
0.1uF/25V
SC293
100uF/10V_D
SC258
0.1uF/25V
USB_GND
RUV3N
RUV3P
SL22
BLM21P300S
USB_CNPWR3
CN15
USB_GND
R408 0_0805
DT_91-00043-008_USB-SINGLE
SC342
0.1uF/25V
C774
100uF/10V_D
SC343
0.1uF/25V
USB_GND
[29] USB_D2P USB_D2P RUV2P
[29] USB_D2N USB_D2N RUV2N
[29] USB_D3P USB_D3P RUV3P
[29] USB_D3N USB_D3N RUV3N
SL18
WCM2012F2S-161T03_R
SL20
WCM2012F2S-161T03_R
USB_D3N SR201 0_0402 RUV3N
USB_D3P SR191 0_0402 RUV3P
USB_D2N SR198 0_0402 RUV2N
USB_D2P SR186 0_0402 RUV2P
LAYOUT TOGETHER
Elitegroup Computer Systems
Title
USB PORT
Size B
Document Number
532-1-4-01
Rev 2.0
Date: Wednesday, December 22, 2004
Sheet 35 of 46

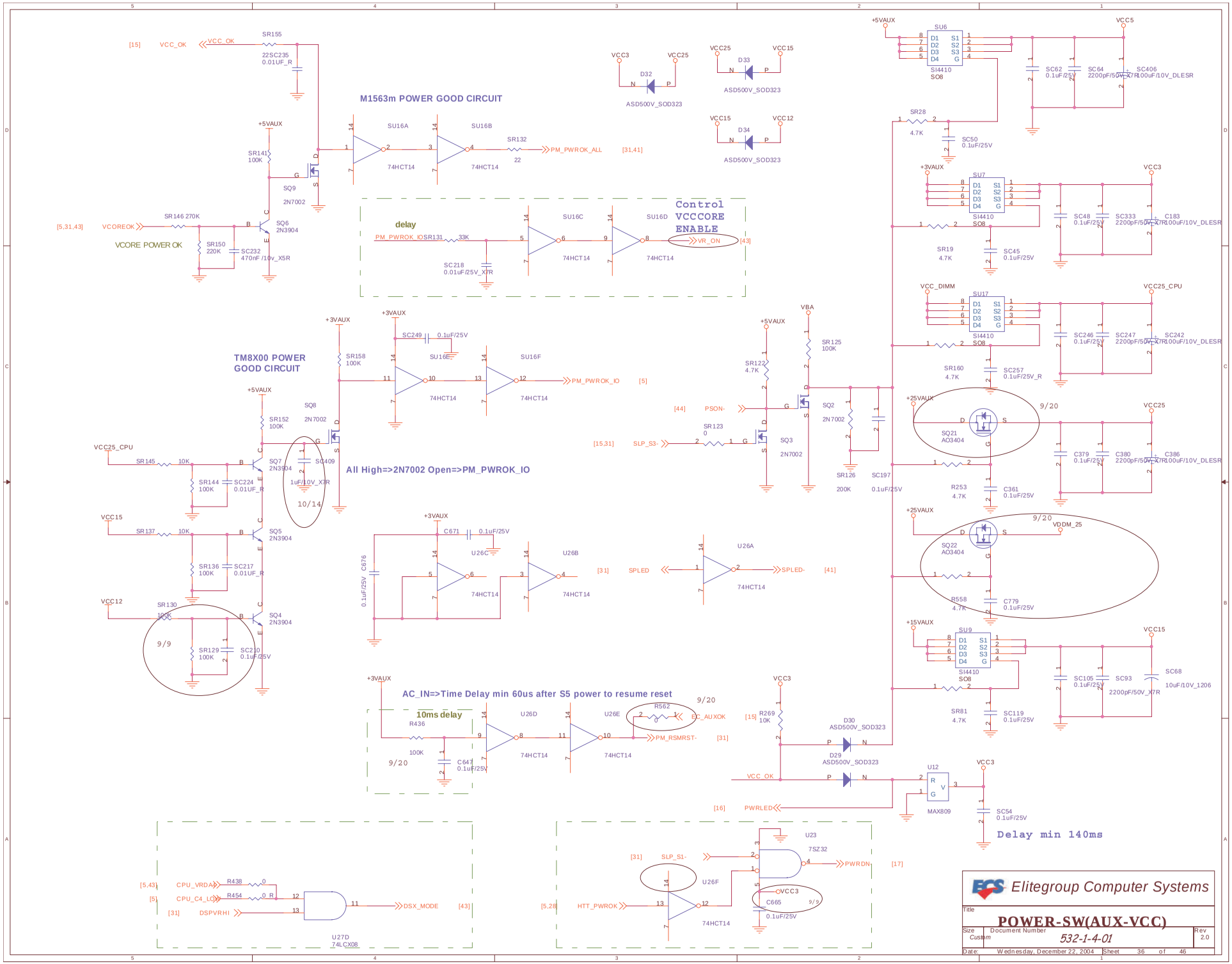
M1563m POWER GOOD CIRCUIT
TM8X00 POWER GOOD CIRCUIT
Control VCCCORE ENABLE
delay
VCORE POWER OK
All High=>2N7002 Open=>PM_PWROK_IO
AC_IN=>Time Delay min 60us after S5 power to resume reset
10ms delay
Delay min 140ms
Elitegroup Computer Systems
POWER-SW(AUX-VCC)
532-1-4-01
Wednesday, December 22, 2004

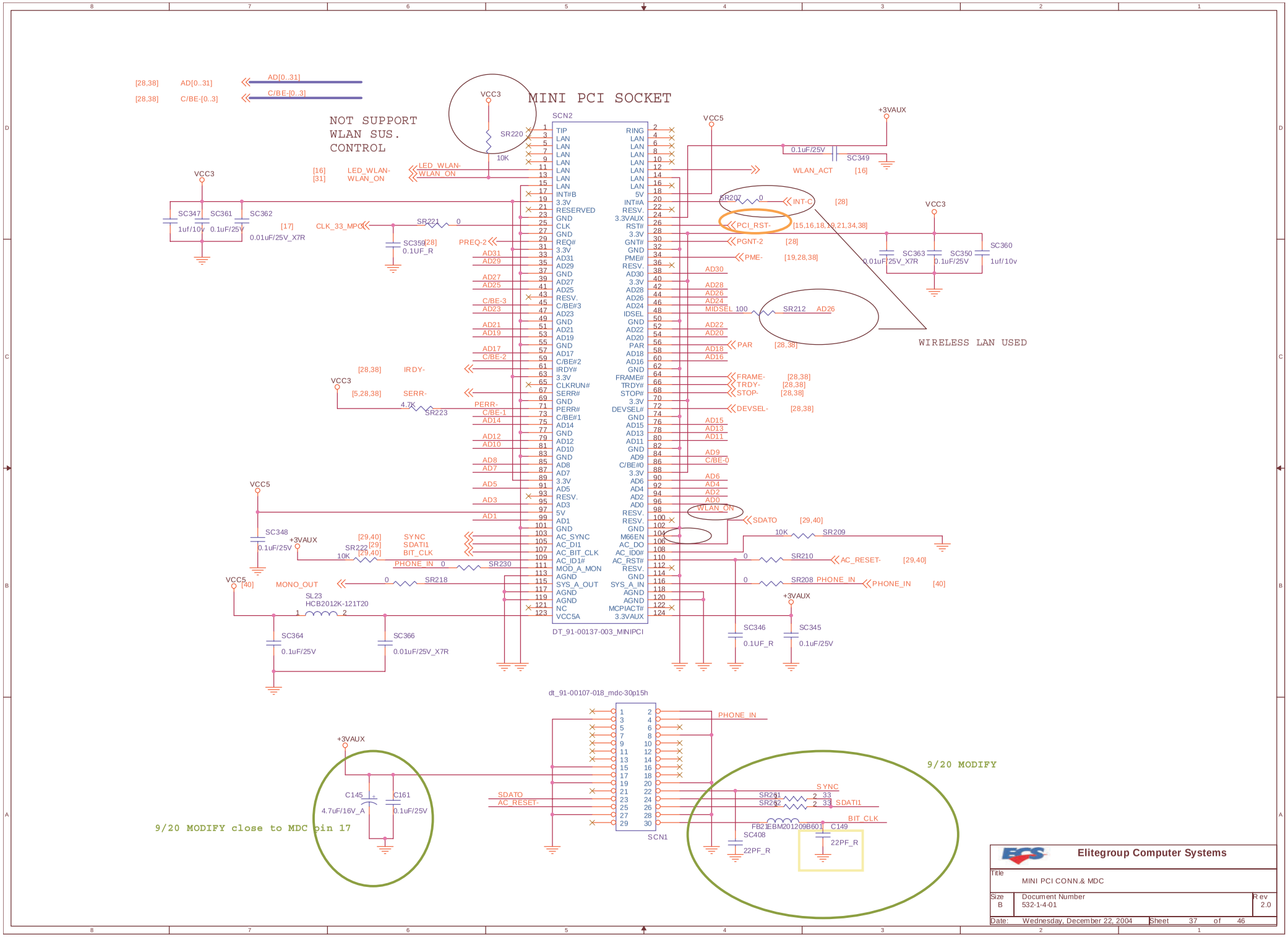
MINI PCI SOCKET
NOT SUPPORT WLAN SUS. CONTROL
WIRELESS LAN USED
9/20 MODIFY
9/20 MODIFY close to MDC pin 17
SCN2
DT_91-00137-003_MINIPCI
dt_91-00107-018_mdc-30p15h
SCN1
Elitegroup Computer Systems
Title
MINI PCI CONN.& MDC
Size B
Document Number 532-1-4-01
Rev 2.0
Date: Wednesday, December 22, 2004
Sheet 37 of 46

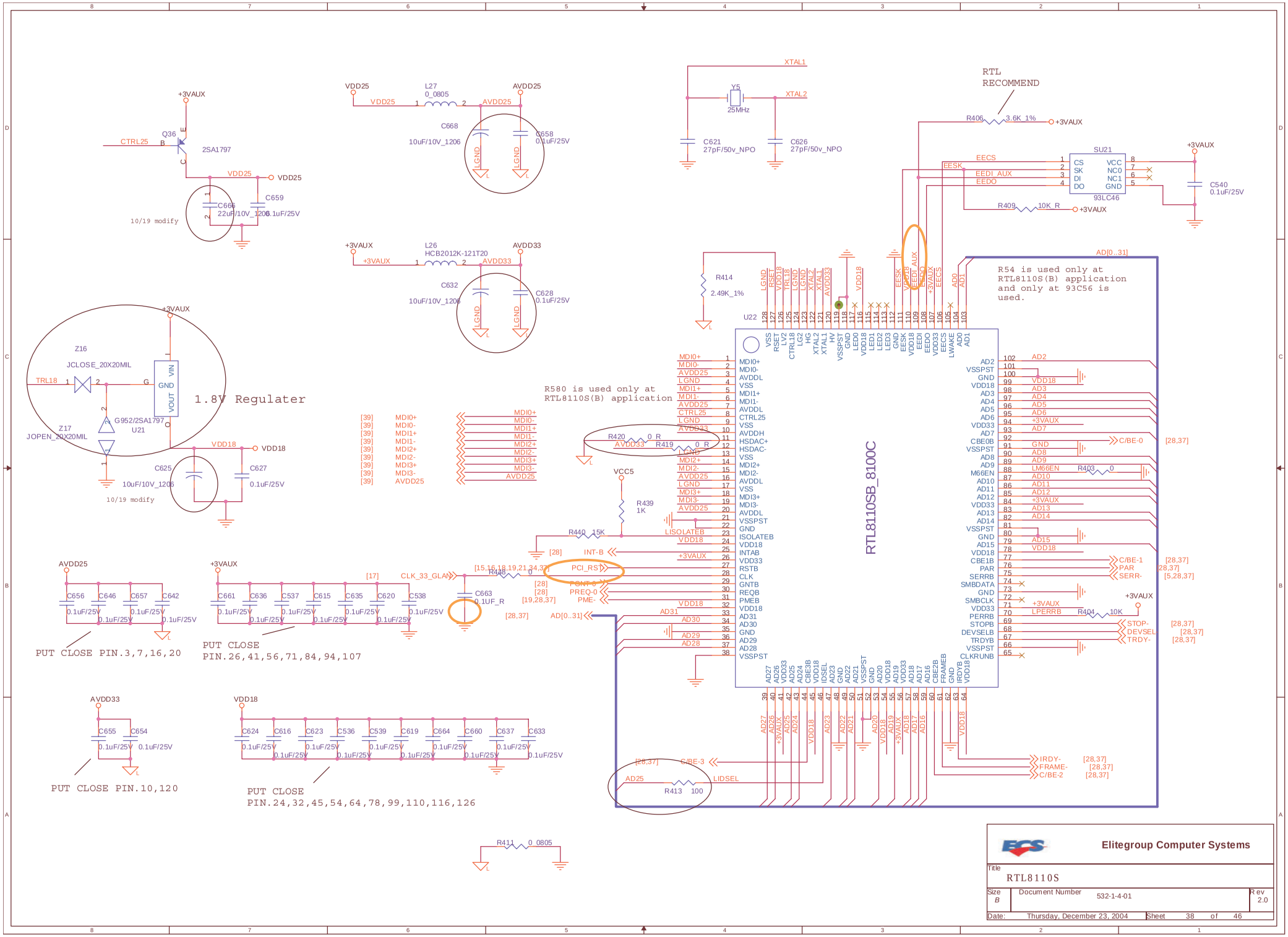
RTL8110SB_8100C
U22
1.8V Regulater
Z16
JCLOSE_20X20MIL
Z17
JOPEN_20X20MIL
Q36
2SA1797
G952/2SA1797
U21
10/19 modify
L27
0_0805
L26
HCB2012K-121T20
Y5
25MHz
XTAL1
XTAL2
C621
27pF/50v_NPO
C626
27pF/50v_NPO
RTL
RECOMMEND
R406
3.6K_1%
SU21
93LC46
R409
10K_R
C540
0.1uF/25V
R54 is used only at
RTL8110S(B) application
and only at 93C56 is
used.
R414
2.49K_1%
R580 is used only at
RTL8110S(B) application
R420
0_R
R419
0_R
R439
1K
R440
15K
R448
0
C663
0.1UF_R
R403
0
R404
10K
R413
100
R411
0_0805
PUT CLOSE PIN.3,7,16,20
PUT CLOSE
PIN.26,41,56,71,84,94,107
PUT CLOSE PIN.10,120
PUT CLOSE
PIN.24,32,45,54,64,78,99,110,116,126
Elitegroup Computer Systems
Title
RTL8110S
Size
B
Document Number
532-1-4-01
Rev
2.0
Date:
Thursday, December 23, 2004
Sheet
38
of
46

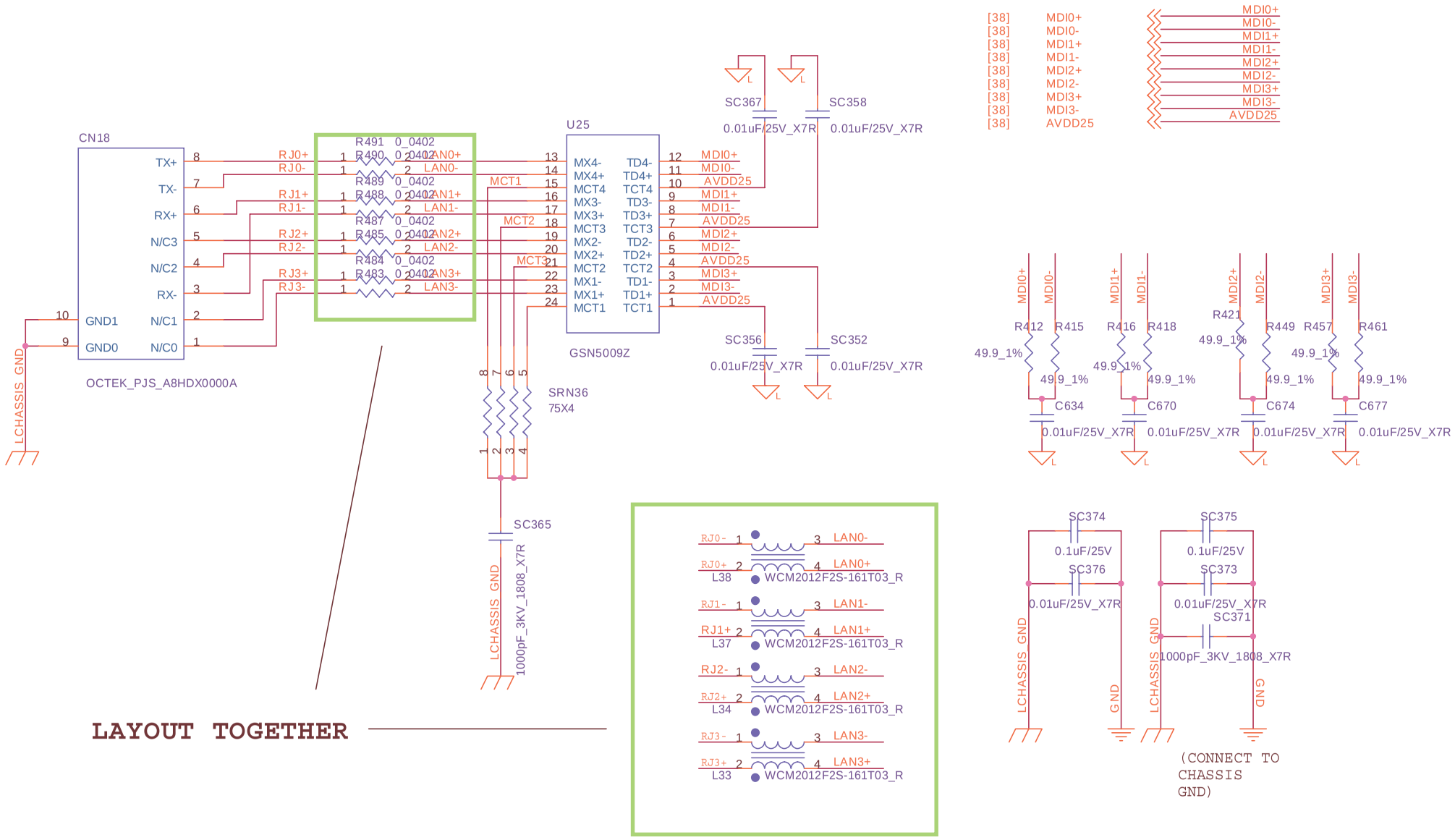


LAYOUT TOGETHER

| | | |
|---|---|---|
| Elitegroup Computer Systems | | |
| Title | RJ45 & HW THERMAL PROTECT | |
| Size A4 | Document Number 532-1-4-01 | Rev 2.0 |
| Date: Wednesday, December 22, 2004 | Sheet 39 of 46 | |

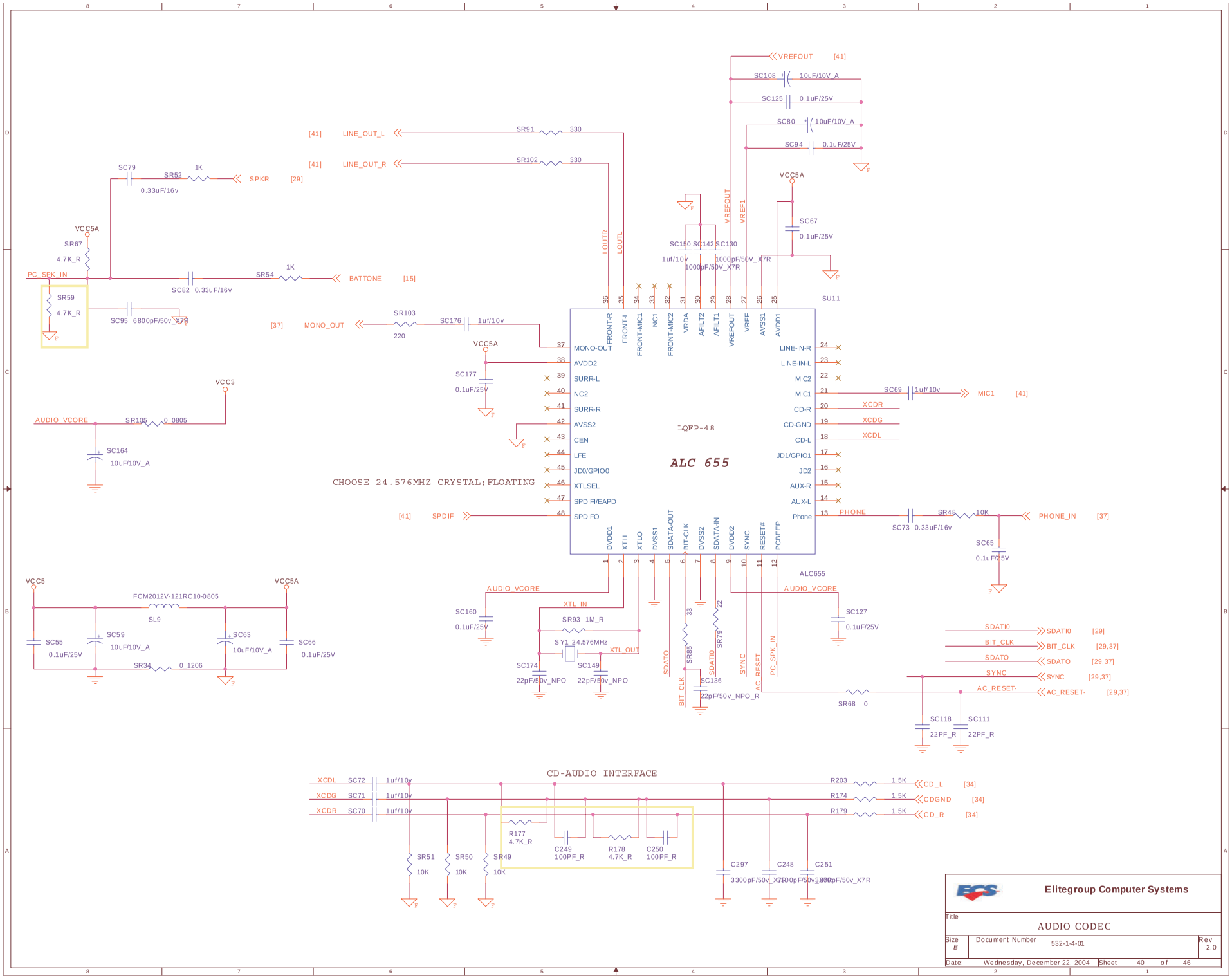

VREFOUT [41]
SC108 10uF/10V_A
SC125 0.1uF/25V
SC80 10uF/10V_A
SC94 0.1uF/25V
[41] LINE_OUT_L
SR91 330
[41] LINE_OUT_R
SR102 330
SC79 0.33uF/16v
SR52 1K
SPKR [29]
VCC5A
SR67 4.7K_R
PC_SPK_IN
SR59 4.7K_R
SC82 0.33uF/16v
SR54 1K
BATTONE [15]
SC95 6800pF/50v_X7R
LOUTR
LOUTL
VREFOUT
VREF1
SC150 1uf/10v
SC142 1000pF/50V_X7R
SC130 1000pF/50V_X7R
SC67 0.1uF/25V
SU11
[37] MONO_OUT
SR103 220
SC176 1uf/10v
SC177 0.1uF/25V
VCC3
AUDIO_VCORE
SR105 0 0805
SC164 10uF/10V_A
FRONT-R
FRONT-L
FRONT-MIC1
NC1
FRONT-MIC2
VRDA
AFILT2
AFILT1
VREFOUT
VREF
AVSS1
AVDD1
MONO-OUT
AVDD2
SURR-L
NC2
SURR-R
AVSS2
CEN
LFE
JD0/GPIO0
XTLSEL
SPDIFI/EAPD
SPDIFO
LINE-IN-R
LINE-IN-L
MIC2
MIC1
CD-R
CD-GND
CD-L
JD1/GPIO1
JD2
AUX-R
AUX-L
Phone
LQFP-48
ALC 655
CHOOSE 24.576MHZ CRYSTAL;FLOATING
SC69 1uf/10v
MIC1 [41]
XCDR
XCDG
XCDL
[41] SPDIF
PHONE
SC73 0.33uF/16v
SR48 10K
PHONE_IN [37]
SC65 0.1uF/25V
DVDD1
XTLI
XTLO
DVSS1
SDATA-OUT
BIT-CLK
DVSS2
SDATA-IN
DVDD2
SYNC
RESET#
PCBEEP
ALC655
AUDIO_VCORE
SC160 0.1uF/25V
XTL_IN
SR93 1M_R
SY1 24.576MHz
XTL_OUT
SC174 22pF/50v_NPO
SC149 22pF/50v_NPO
SC127 0.1uF/25V
SDATO
SR85 33
SDATI0
SR79 22
SYNC
AC_RESET
PC_SPK_IN
SC136 22pF/50v_NPO_R
BIT_CLK
SDATI0 [29]
BIT_CLK [29,37]
SDATO [29,37]
SYNC [29,37]
AC_RESET- [29,37]
SR68 0
SC118 22PF_R
SC111 22PF_R
VCC5
VCC5A
FCM2012V-121RC10-0805
SL9
SC55 0.1uF/25V
SC59 10uF/10V_A
SC63 10uF/10V_A
SC66 0.1uF/25V
SR34 0 1206
CD-AUDIO INTERFACE
XCDL SC72 1uf/10v
XCDG SC71 1uf/10v
XCDR SC70 1uf/10v
R203 1.5K CD_L [34]
R174 1.5K CDGND [34]
R179 1.5K CD_R [34]
R177 4.7K_R
C249 100PF_R
R178 4.7K_R
C250 100PF_R
SR51 10K
SR50 10K
SR49 10K
C297 3300pF/50v_X7R
C248 3300pF/50v_X7R
C251 3300pF/50v_X7R
Elitegroup Computer Systems
Title
AUDIO CODEC
Size B
Document Number 532-1-4-01
Rev 2.0
Date: Wednesday, December 22, 2004
Sheet 40 of 46

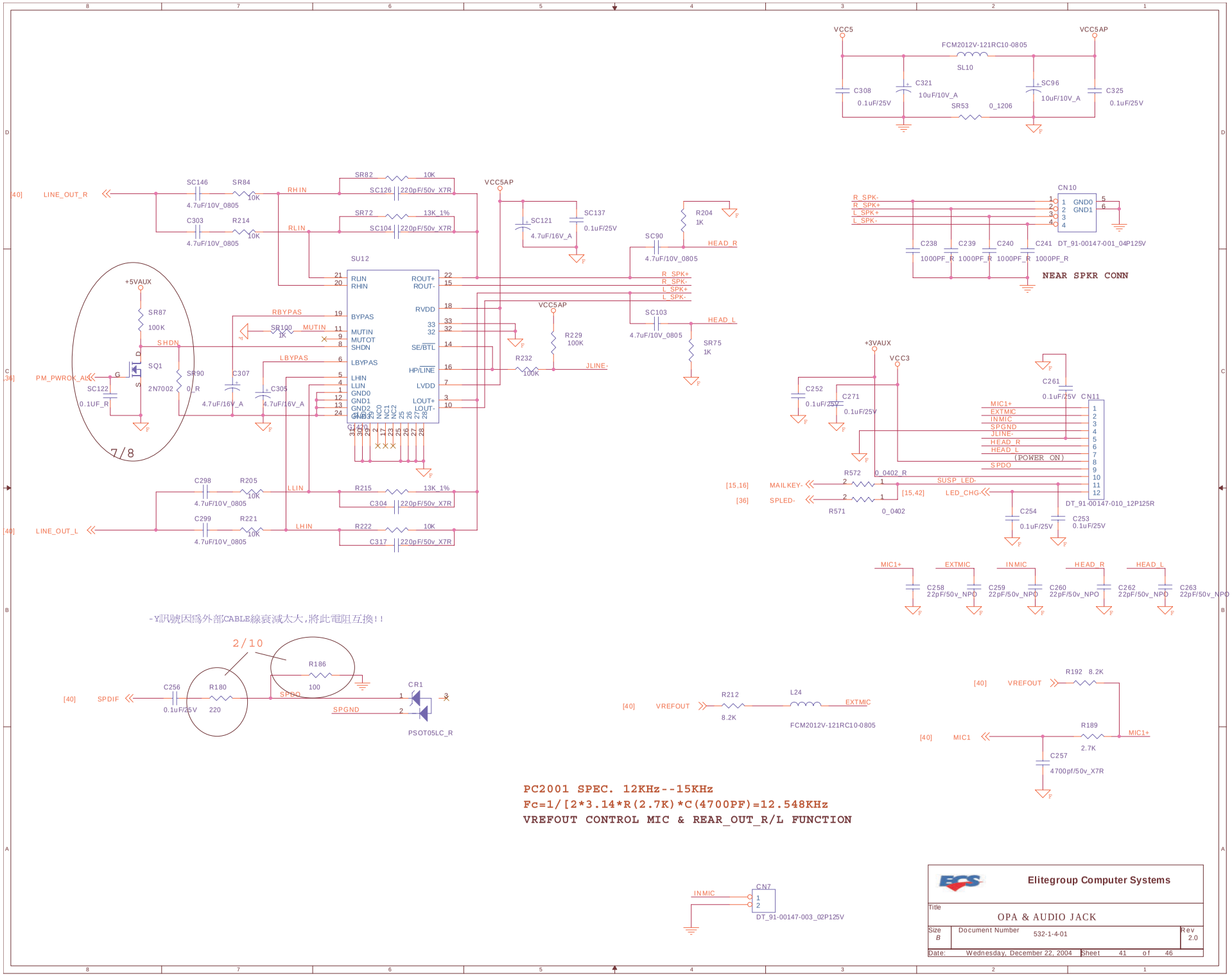
VCC5
VCC5AP
FCM2012V-121RC10-0805
SL10
C308
0.1uF/25V
C321
10uF/10V_A
SC96
10uF/10V_A
C325
0.1uF/25V
SR53
0_1206
CN10
R_SPK-
R_SPK+
L_SPK+
L_SPK-
GND0
GND1
C238
C239
C240
C241
1000PF_R
DT_91-00147-001_04P125V
NEAR SPKR CONN
[40]
LINE_OUT_R
SC146
SR84
4.7uF/10V_0805
10K
RHIN
SR82
SC126
220pF/50v_X7R
C303
R214
RLIN
SR72
13K_1%
SC104
SU12
SC121
4.7uF/16V_A
SC137
0.1uF/25V
R204
1K
SC90
HEAD_R
+5VAUX
SR87
100K
SHDN
SQ1
2N7002
PM_PWROK_AL
SC122
0.1UF_R
SR90
0_R
RBYPAS
SR100
MUTIN
LBYPAS
C307
C305
ROUT+
ROUT-
RVDD
BYPAS
MUTIN
MUTOT
SHDN
SE/BTL
HP/LINE
LVDD
LHIN
LLIN
GND0
GND1
GND2
GND3
LOUT+
LOUT-
R229
100K
R232
JLINE-
SC103
HEAD_L
SR75
1K
7/8
C298
R205
LLIN
R215
C304
C299
R221
LHIN
R222
C317
LINE_OUT_L
+3VAUX
VCC3
C252
0.1uF/25V
C271
C261
CN11
MIC1+
EXTMIC
INMIC
SPGND
JLINE-
HEAD_R
HEAD_L
(POWER ON)
SPDO
R572
0_0402_R
[15,16]
MAILKEY-
SUSP_LED-
[36]
SPLED-
[15,42]
LED_CHG
R571
0_0402
C254
C253
DT_91-00147-010_12P125R
C258
22pF/50v_NPO
C259
C260
C262
C263
-Y訊號因爲外部CABLE線衰減太大,將此電阻互換!!
2/10
R186
100
C256
R180
220
[40]
SPDIF
SPDO
SPGND
CR1
PSOT05LC_R
[40]
VREFOUT
R212
8.2K
L24
EXTMIC
FCM2012V-121RC10-0805
R192
8.2K
R189
2.7K
MIC1
C257
4700pf/50v_X7R
PC2001 SPEC. 12KHz--15KHz
Fc=1/[2*3.14*R(2.7K)*C(4700PF)=12.548KHz
VREFOUT CONTROL MIC & REAR_OUT_R/L FUNCTION
INMIC
CN7
DT_91-00147-003_02P125V
Elitegroup Computer Systems
Title
OPA & AUDIO JACK
Size
B
Document Number
532-1-4-01
Rev
2.0
Date:
Wednesday, December 22, 2004
Sheet
41
of
46

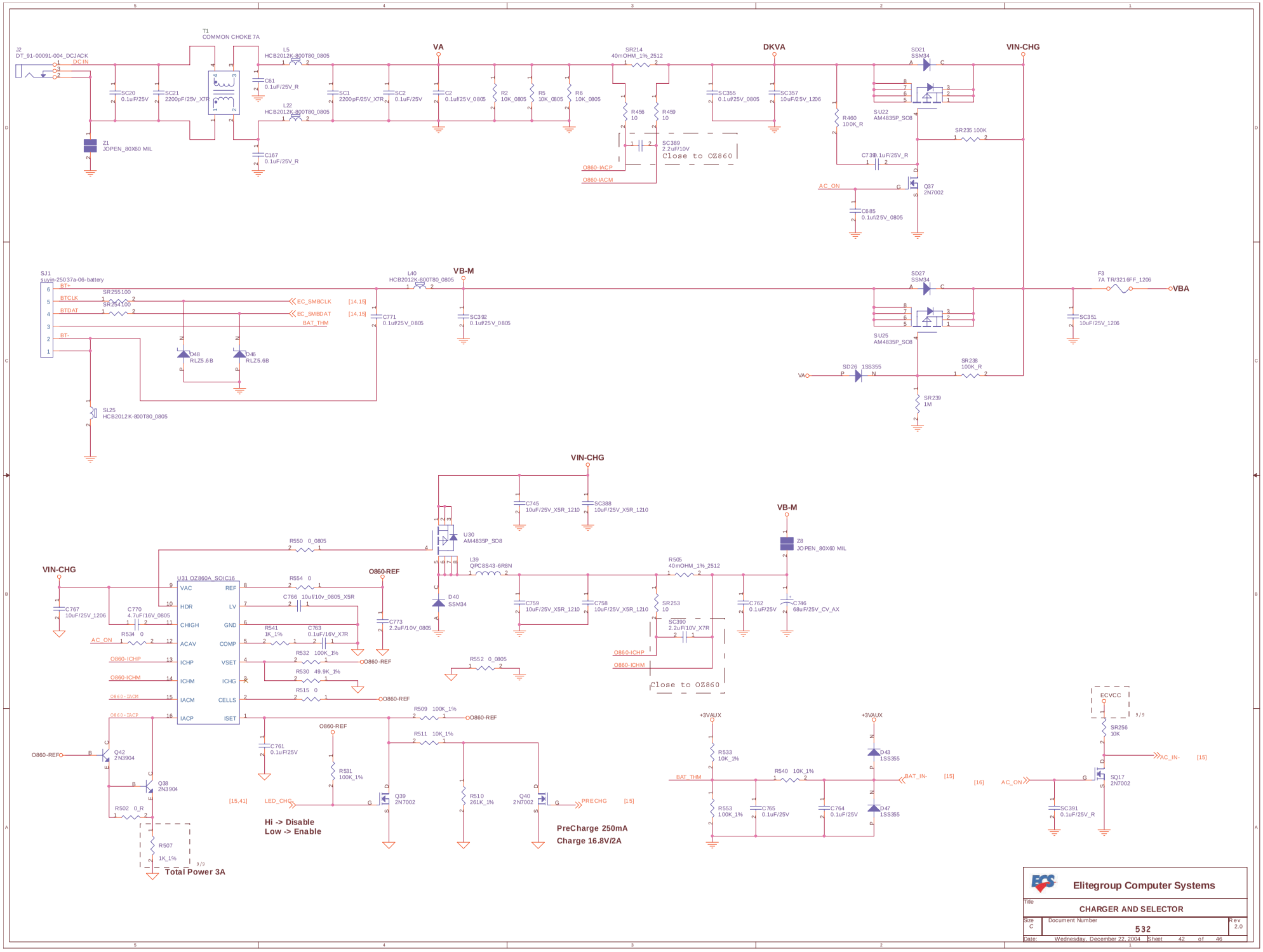
J2
DT_91-00091-004_DCJACK
DC IN
T1
COMMON CHOKE 7A
L5
HCB2012K-800T80_0805
L22
HCB2012K-800T80_0805
C61
0.1uF/25V_R
C167
0.1uF/25V_R
SC20
0.1uF/25V
SC21
2200pF/25V_X7R
Z1
JOPEN_80X60 MIL
VA
SC1
2200pF/25V_X7R
SC2
0.1uF/25V
C2
0.1uF/25V_0805
R2
10K_0805
R5
10K_0805
R6
10K_0805
SR214
40mOHM_1%_2512
R456
10
R459
10
SC389
2.2uF/10V
Close to OZ860
O860-IACP
O860-IACM
DKVA
SC355
0.1uF/25V_0805
SC357
10uF/25V_1206
R460
100K_R
SD21
SSM34
VIN-CHG
SU22
AM4835P_SO8
SR235 100K
C739 0.1uF/25V_R
AC_ON
Q37
2N7002
C685
0.1uf/25V_0805
SJ1
suyin-25037a-06-battery
BT+
BTCLK
BTDAT
BT-
SR255100
SR254100
EC_SMBCLK
EC_SMBDAT
BAT_THM
[14,15]
[14,15]
D48
RLZ5.6B
D46
RLZ5.6B
SL25
HCB2012K-800T80_0805
L40
HCB2012K-800T80_0805
VB-M
C771
0.1uf/25V_0805
SC392
0.1uf/25V_0805
SD27
SSM34
SU25
AM4835P_SO8
F3
7A TR/3216FF_1206
VBA
SC351
10uF/25V_1206
SD26 1SS355
VA
SR238
100K_R
SR239
1M
VIN-CHG
C745
10uF/25V_X5R_1210
SC388
10uF/25V_X5R_1210
U30
AM4835P_SO8
L39
QPC8S43-6R8N
D40
SSM34
C759
10uF/25V_X5R_1210
C758
10uF/25V_X5R_1210
R505
40mOHM_1%_2512
SR253
10
SC390
2.2uF/10V_X7R
O860-ICHP
O860-ICHM
Close to OZ860
VB-M
Z8
JOPEN_80X60 MIL
C762
0.1uF/25V
C746
68uF/25V_CV_AX
R550 0_0805
VIN-CHG
U31 OZ860A_SOIC16
VAC
HDR
CHIGH
ACAV
ICHP
ICHM
IACM
IACP
REF
LV
GND
COMP
VSET
ICHG
CELLS
ISET
O860-REF
C767
10uF/25V_1206
C770
4.7uF/16V_0805
R534 0
AC_ON
O860-ICHP
O860-ICHM
O860-IACM
O860-IACP
R554 0
C766 10uf/10v_0805_X5R
R541
1K_1%
C763
0.1uF/16V_X7R
R532 100K_1%
R530 49.9K_1%
R515 0
C773
2.2uF/10V_0805
R552 0_0805
R509 100K_1%
R511 10K_1%
C761
0.1uF/25V
R531
100K_1%
Q42
2N3904
Q38
2N3904
R502 0_R
R507
1K_1%
9/9
Total Power 3A
[15,41]
LED_CHG
Hi -> Disable
Low -> Enable
Q39
2N7002
R510
261K_1%
Q40
2N7002
PRECHG
[15]
PreCharge 250mA
Charge 16.8V/2A
+3VAUX
R533
10K_1%
BAT_THM
R553
100K_1%
R540 10K_1%
C765
0.1uF/25V
C764
0.1uF/25V
D43
1SS355
D47
1SS355
BAT_IN-
[15]
[16]
AC_ON
ECVCC
9/9
SR256
10K
AC_IN-
[15]
SQ17
2N7002
SC391
0.1uF/25V_R
Elitegroup Computer Systems
Title
CHARGER AND SELECTOR
Size
C
Document Number
532
Rev
2.0
Date:
Wednesday, December 22, 2004
Sheet
42
of
46

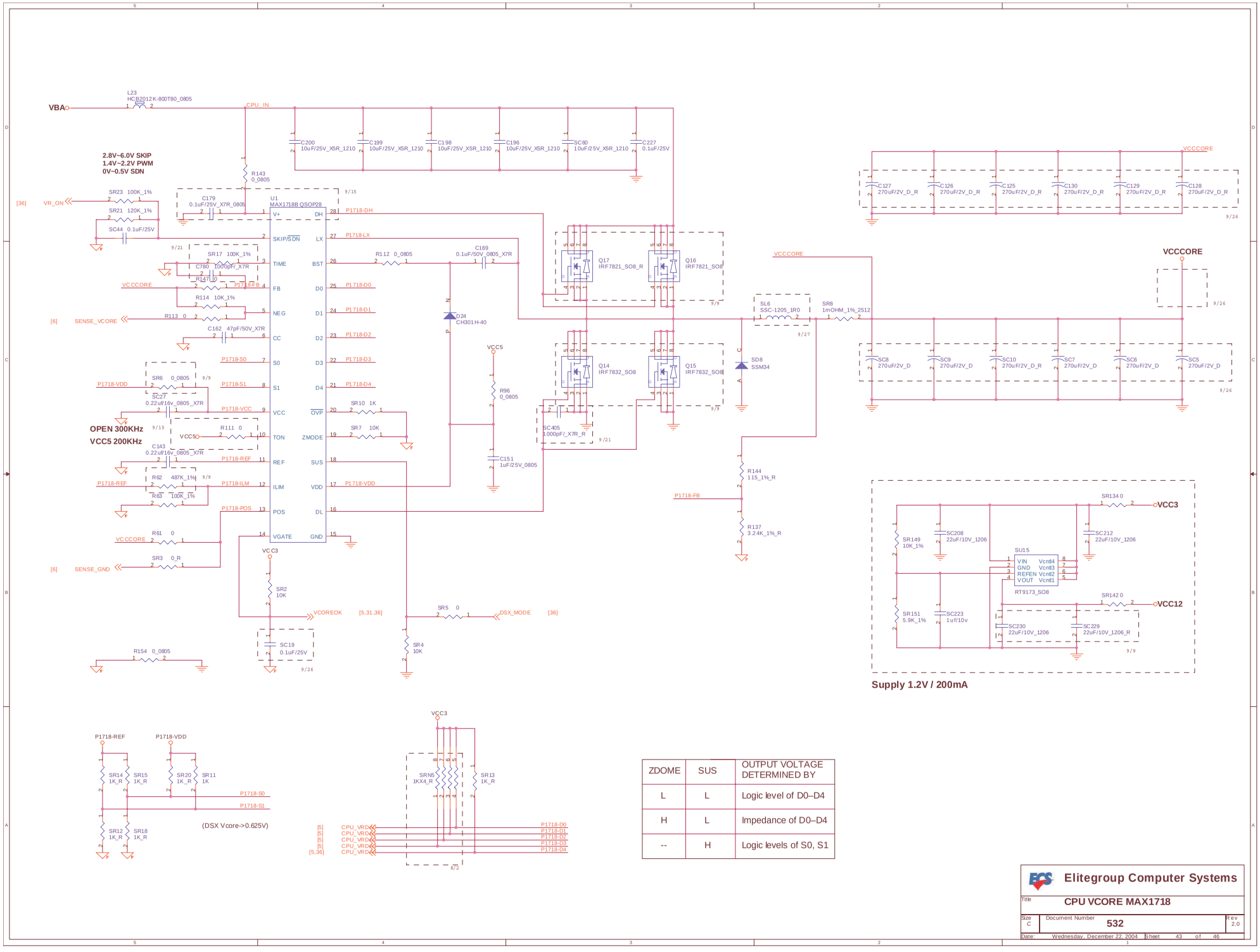


| ZDOME | SUS | OUTPUT VOLTAGE DETERMINED BY |
|---|---|---|
| L | L | Logic level of D0–D4 |
| H | L | Impedance of D0–D4 |
| -- | H | Logic levels of S0, S1 |

Elitegroup Computer Systems

Title: CPU VCORE MAX1718

Size: C | Document Number: 532 | Rev: 2.0

Date: Wednesday, December 22, 2004 | Sheet 43 of 46

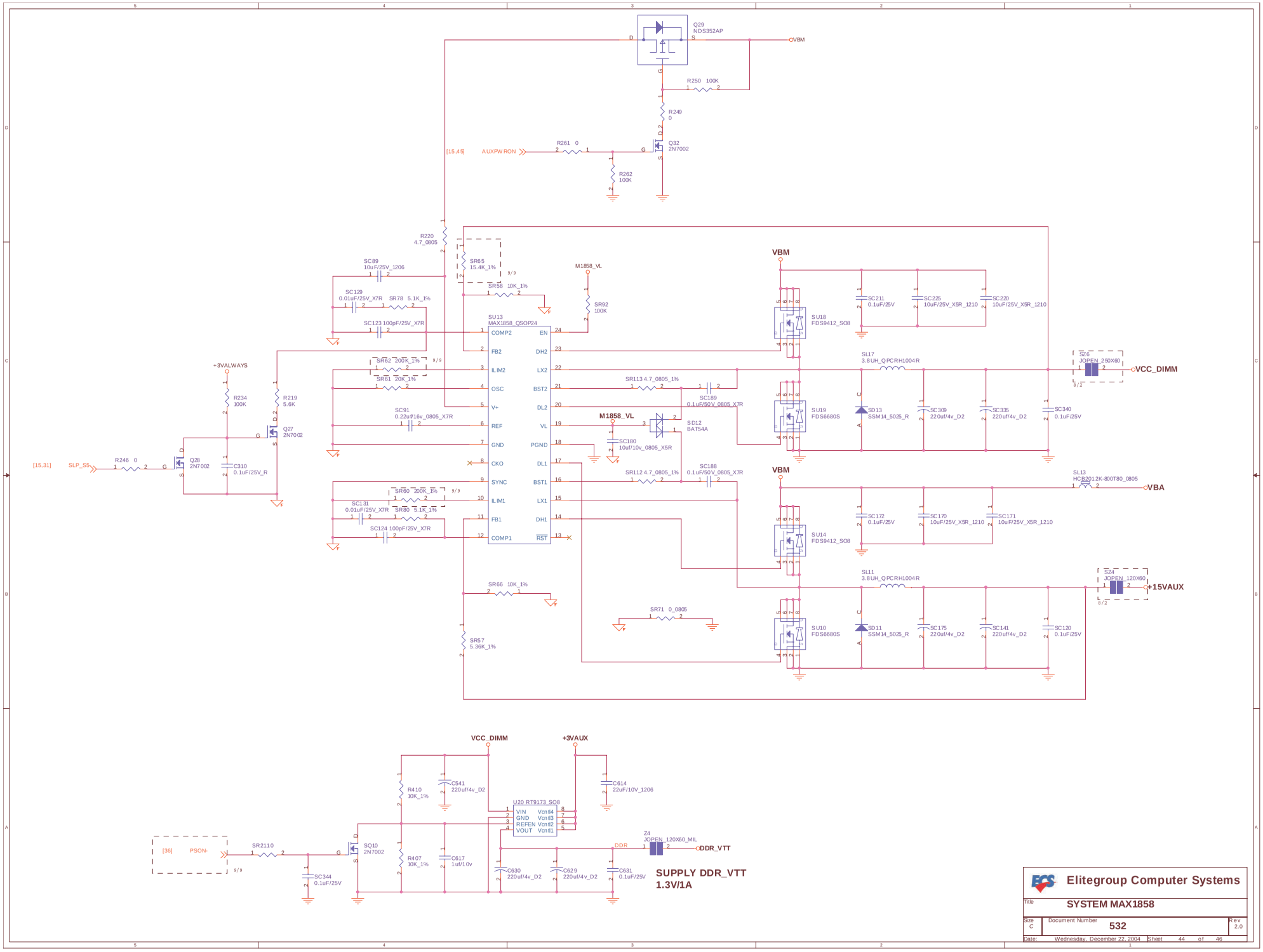
Q29
NDS352AP
VBM
R250 100K
R249
0
Q32
2N7002
[15,45]
AUXPW RON
R261 0
R262
100K
R220
4.7_0805
SR65
15.4K_1%
SC89
10uF/25V_1206
SC129
0.01uF/25V_X7R
SR78 5.1K_1%
SC123 100pF/25V_X7R
SR58 10K_1%
M1858_VL
SR92
100K
SU13
MAX1858_QSOP24
COMP2
FB2
ILIM2
OSC
V+
REF
GND
CKO
SYNC
ILIM1
FB1
COMP1
EN
DH2
LX2
BST2
DL2
VL
PGND
DL1
BST1
LX1
DH1
RST
SR62 200K_1%
SR61 20K_1%
SC91
0.22uf/16v_0805_X7R
SR60 200K_1%
SC131
0.01uF/25V_X7R
SR80 5.1K_1%
SC124 100pF/25V_X7R
SR66 10K_1%
SR57
5.36K_1%
+3VALWAYS
R234
100K
R219
5.6K
Q27
2N7002
[15,31]
SLP_S5
R246 0
Q28
2N7002
C310
0.1uF/25V_R
SR113 4.7_0805_1%
SC189
0.1uF/50V_0805_X7R
SD12
BAT54A
SC180
10uf/10v_0805_X5R
SR112 4.7_0805_1%
SC188
0.1uF/50V_0805_X7R
SR71 0_0805
SU18
FDS9412_SO8
SC211
0.1uF/25V
SC225
10uF/25V_X5R_1210
SC220
10uF/25V_X5R_1210
SL17
3.8UH_QPCRH1004R
SZ6
JOPEN_250X60
VCC_DIMM
SU19
FDS6680S
SD13
SSM14_5025_R
SC309
220uf/4v_D2
SC335
220uf/4v_D2
SC340
0.1uF/25V
SU14
FDS9412_SO8
SC172
0.1uF/25V
SC170
10uF/25V_X5R_1210
SC171
10uF/25V_X5R_1210
SL13
HCB2012K-800T80_0805
VBA
SL11
3.8UH_QPCRH1004R
SZ4
JOPEN_120X60
+15VAUX
SU10
FDS6680S
SD11
SSM14_5025_R
SC175
220uf/4v_D2
SC141
220uf/4v_D2
SC120
0.1uF/25V
VCC_DIMM
+3VAUX
R410
10K_1%
C541
220uf/4v_D2
U20 RT9173_SO8
VIN
GND
REFEN
VOUT
Vcntl4
Vcntl3
Vcntl2
Vcntl1
C614
22uF/10V_1206
[36]
PSON-
SR2110
SQ10
2N7002
SC344
0.1uF/25V
R407
10K_1%
C617
1uf/10v
DDR
Z4
JOPEN_120X60_MIL
DDR_VTT
C630
220uf/4v_D2
C629
220uf/4v_D2
C631
0.1uF/25V
SUPPLY DDR_VTT
1.3V/1A
Elitegroup Computer Systems
Title
SYSTEM MAX1858
Size
C
Document Number
532
Rev
2.0
Date:
Wednesday, December 22, 2004
Sheet
44
of
46

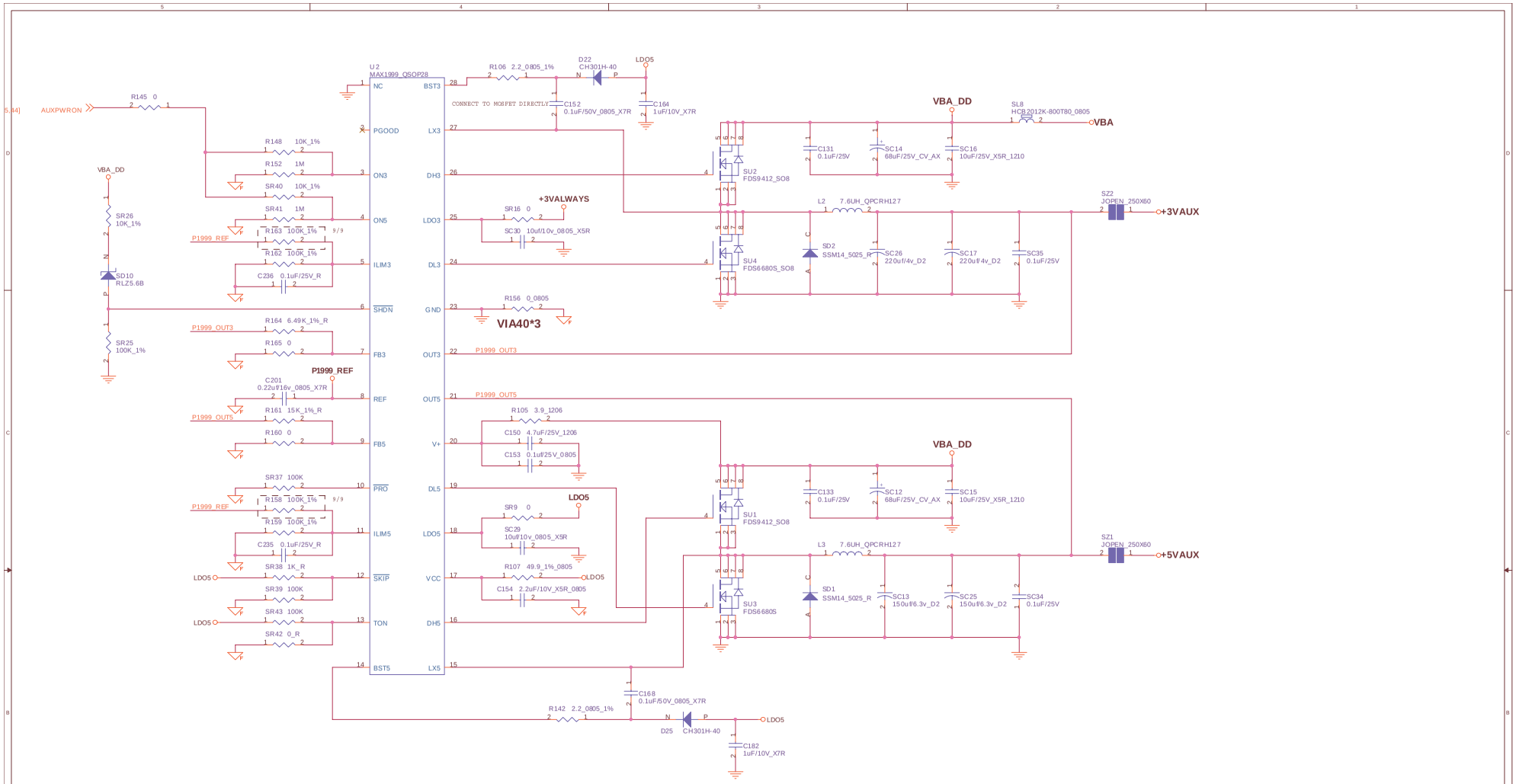


Elitegroup Computer Systems

Title: SYSTEM MAX1999

| Size | Document Number | Rev |
|---|---|---|
| C | 532 | 2.0 |

Date: Wednesday, December 22, 2004 Sheet 45 of 46

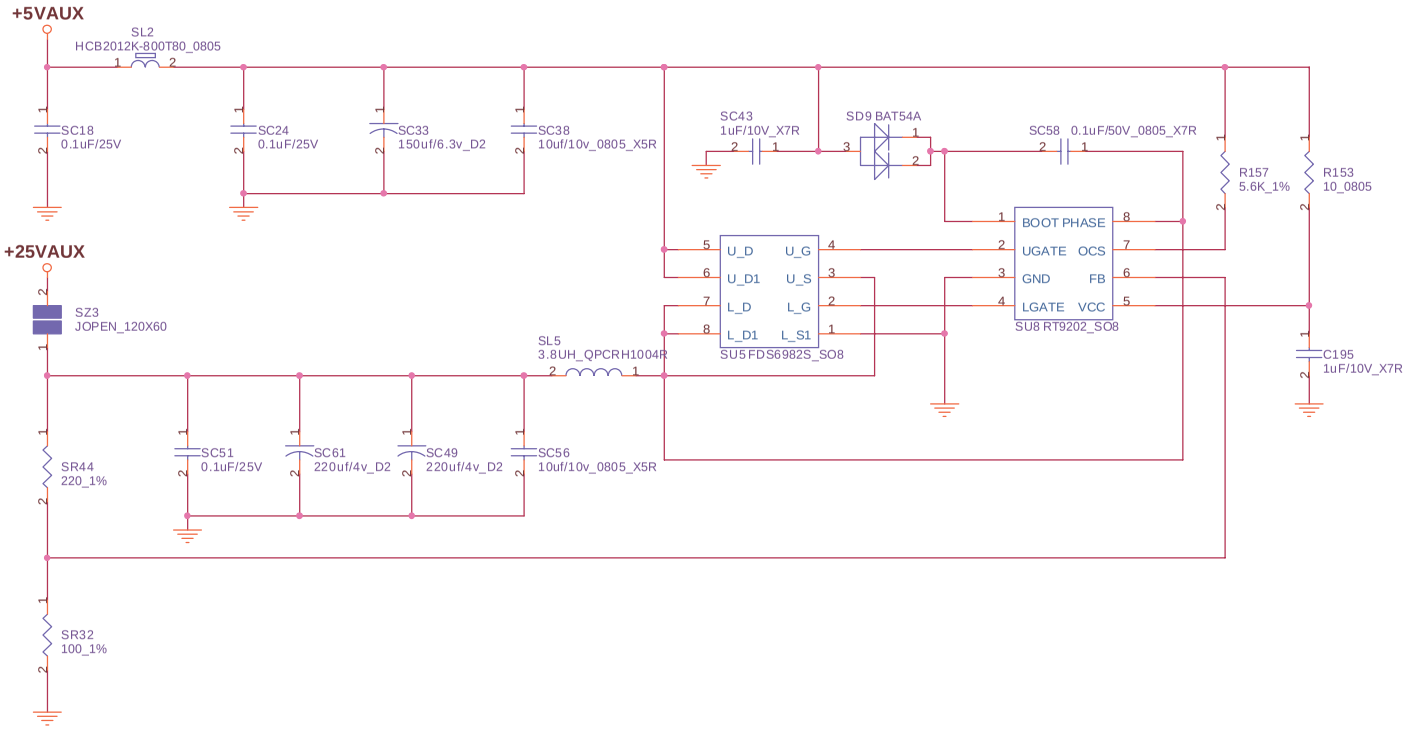


Elitegroup Computer Systems

| | | |
|---|---|---|
| Title | RT9202 +25VAUX | |
| Size B | Document Number 532 | Rev 2.0 |
| Date: Monday, December 20, 2004 | Sheet 46 of 46 | |