# COMPAL CONFIDENTIAL

**PCB NO :** ***LA-1591***

**Revision :** ***2.0***

**DATE :**

# LA-1591 Schematics Document

# uFCBGA/uFCPGA Northwood

## 2002-12-2

## REV: 2.0

THIS SHEET OF ENGINEERING DRAWING IS THE PROPRIETARY PROPERTY OF COMPAL ELECTRONICS, INC. AND CONTAINS CONFIDENTIAL AND TRADE SECRET INFORMATION. THIS SHEET MAY NOT BE TRANSFERRED FROM THE CUSTODY OF THE COMPETENT DIVISION OF R&D DEPARTMENT EXCEPT AS AUTHORIZED BY COMPAL ELECTRONICS, INC. NEITHER THIS SHEET NOR THE INFORMATION CONTAINS MAY BE USED BY OR DISCLOSED TO ANY THIRD PARTY WITHOUT PRIOR WRITTEN CONSENT OF COMPAL ELECTRONICS, INC.

| | | |
|---|---|---|
| Compal Electronics, Inc. | | |
| Title | SCHEMATIC, M/B LA-1591 | |
| Size | Document Number 401235 | Rev 2B |
| Date: ¬P期五, 五月 16, 2003 | Sheet 1 of 47 | |

**Compal confidential**

**File Name : LA-1591**

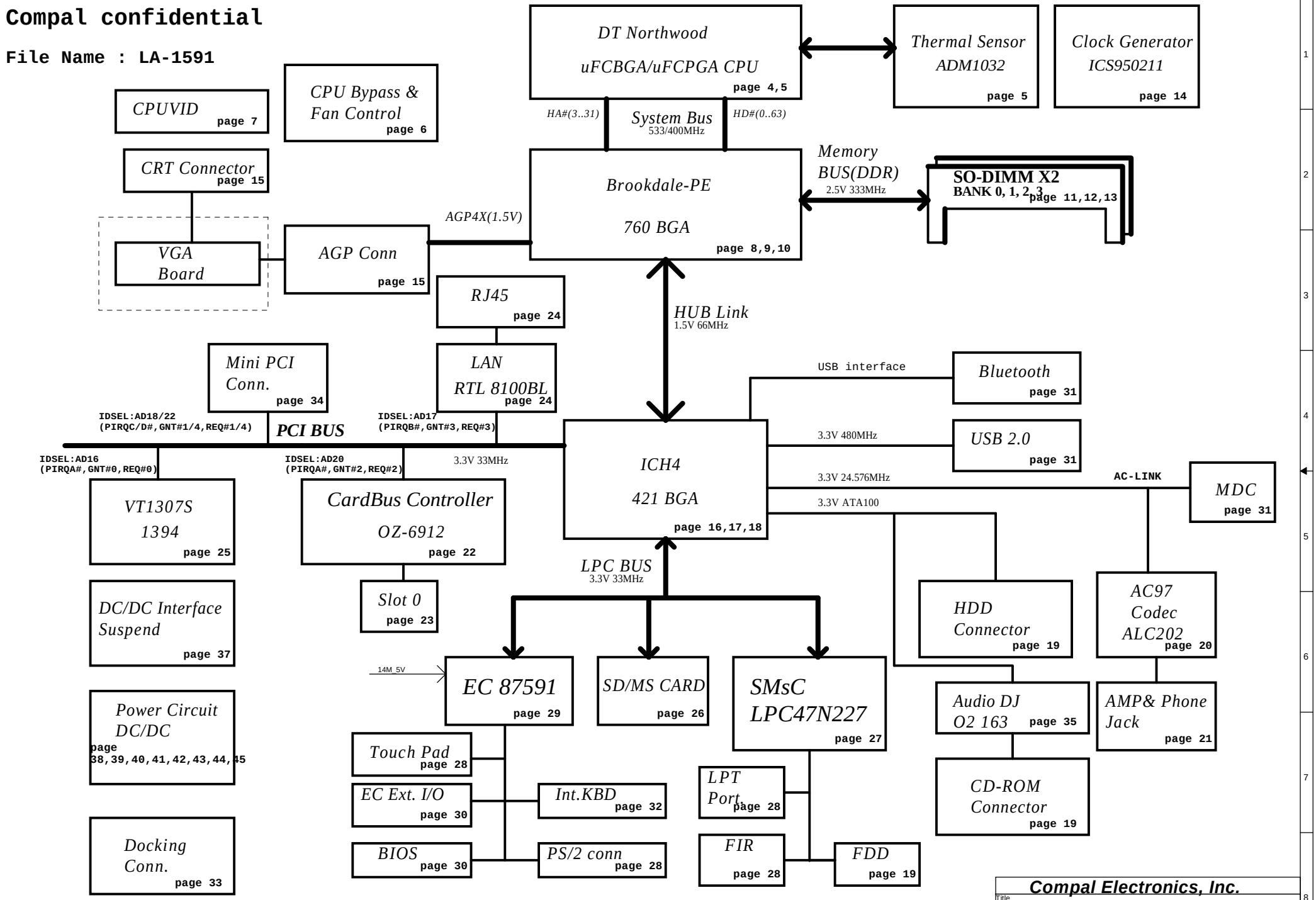


THIS SHEET OF ENGINEERING DRAWING IS THE PROPRIETARY PROPERTY OF COMPAL ELECTRONICS, INC. AND CONTAINS CONFIDENTIAL AND TRADE SECRET INFORMATION. THIS SHEET MAY NOT BE TRANSFERRED FROM THE CUSTODY OF THE COMPETENT DIVISION OF R&D DEPARTMENT EXCEPT AS AUTHORIZED BY COMPAL ELECTRONICS, INC. NEITHER THIS SHEET NOR THE INFORMATION CONTAINS MAY BE USED BY OR DISCLOSED TO ANY THIRD PARTY WITHOUT PRIOR WRITTEN CONSENT OF COMPAL ELECTRONICS, INC.

**Compal Electronics, Inc.**

| | |
|---|---|
| Title | SCHEMATIC, M/B LA-1591 |
| Size | Custom |
| Document Number | 401235 |
| Rev | 2B |
| Date: | ¬P期五, 五月 16, 2003 |
| Sheet | 2 of 47 |

**SCHEMATICS VERSION LIST**

| VERSION | ISSUE DATE | REMARK |
|---|---|---|
| 0.00 | | FIRST PREVIEW |
| 0.01 | | |
| 0.02 | | |
| | | |
| | | |
| | | |

**Power Managment table**

| State \ Signal | +3VALW<br>+5VALW<br>+12VALW | +3V<br>+5V<br>+2.5V | +3VS<br>+5VS<br>+1.5VS<br>+1.2VP<br>+CPU_CORE<br>+1.25VS |
|---|---|---|---|
| S0 | ON | ON | ON |
| S1 | ON | ON | ON |
| S3 | ON | ON | OFF |
| S5 S4/AC | ON | OFF | OFF |
| S5 S4/AC don't exist | OFF | OFF | OFF |

| | PCB Rev | CHIPS Rev |
|---|---|---|
| SST-Build | 0.1 | |
| PT-Build | | |
| ST-Build | | |
| QT-Build | | |
| | | |
| | | |

**Ceramic Capacitor Spec Guide:**

**Temperature Characteristics:**

| Symbol | 0 | 1 | 2 | 3 | 4 | 5 | 6 | 7 |
|---|---|---|---|---|---|---|---|---|
| CODE | Z5U | Z5V | Z5P | Y5U | Y5V | Y5P | X5R | X7R |

| 8 | 9 | A | B | C | D | E | F | G |
|---|---|---|---|---|---|---|---|---|
| NP0 | C0G | | BJ | CH | CJ | CK | SH | SJ |

| H | I | J | |
|---|---|---|---|
| UJ | UK | SL | |

**Tolerance:**

| Symbol | A | B | C | D | F | G | H | J |
|---|---|---|---|---|---|---|---|---|
| CODE | +-0.05PF | +-0.1PF | +-0.25PF | +-0.5PF | +-1PF | +-2% | +-3% | +-5% |

| K | M | N | P | Q | V | X | Z | |
|---|---|---|---|---|---|---|---|---|
| +-10% | +-20% | +-30% | +100,-0% | +30,-10% | +20,-10% | +40,-20% | +80,-20% | |

**SMBUS Control Table**

| | SOURCE | INVERTER | BATT | SERIAL EEPROM | THERMAL SENSOR (U43) | THERMAL SENSOR (U91) | SODIMM | CLK CHIP | MINI PCI |
|---|---|---|---|---|---|---|---|---|---|
| SMB_EC_CK1<br>SMB_EC_DA1 | NS 87591 | ✓ | ✓ | ✓ (1010) | ✗ | ✗ | ✗ | ✗ | ✗ |
| SMB_EC_CK2<br>SMB_EC_DA2 | NS 87591 | ✗ | ✗ | ✗ | ✓ | ✓ | ✗ | ✗ | ✗ |
| SMB_CLK<br>SMB_DATA | ICH4 | ✗ | ✗ | ✗ | ✗ | ✗ | ✓ | ✓ | ✓ |

**NOTE1:**

**@XX : Depop component**

THIS SHEET OF ENGINEERING DRAWING IS THE PROPRIETARY PROPERTY OF COMPAL ELECTRONICS, INC. AND CONTAINS CONFIDENTIAL AND TRADE SECRET INFORMATION. THIS SHEET MAY NOT BE TRANSFERRED FROM THE CUSTODY OF THE COMPETENT DIVISION OF R&D DEPARTMENT EXCEPT AS AUTHORIZED BY COMPAL ELECTRONICS, INC. NEITHER THIS SHEET NOR THE INFORMATION CONTAINS MAY BE USED BY OR DISCLOSED TO ANY THIRD PARTY WITHOUT PRIOR WRITTEN CONSENT OF COMPAL ELECTRONICS, INC.

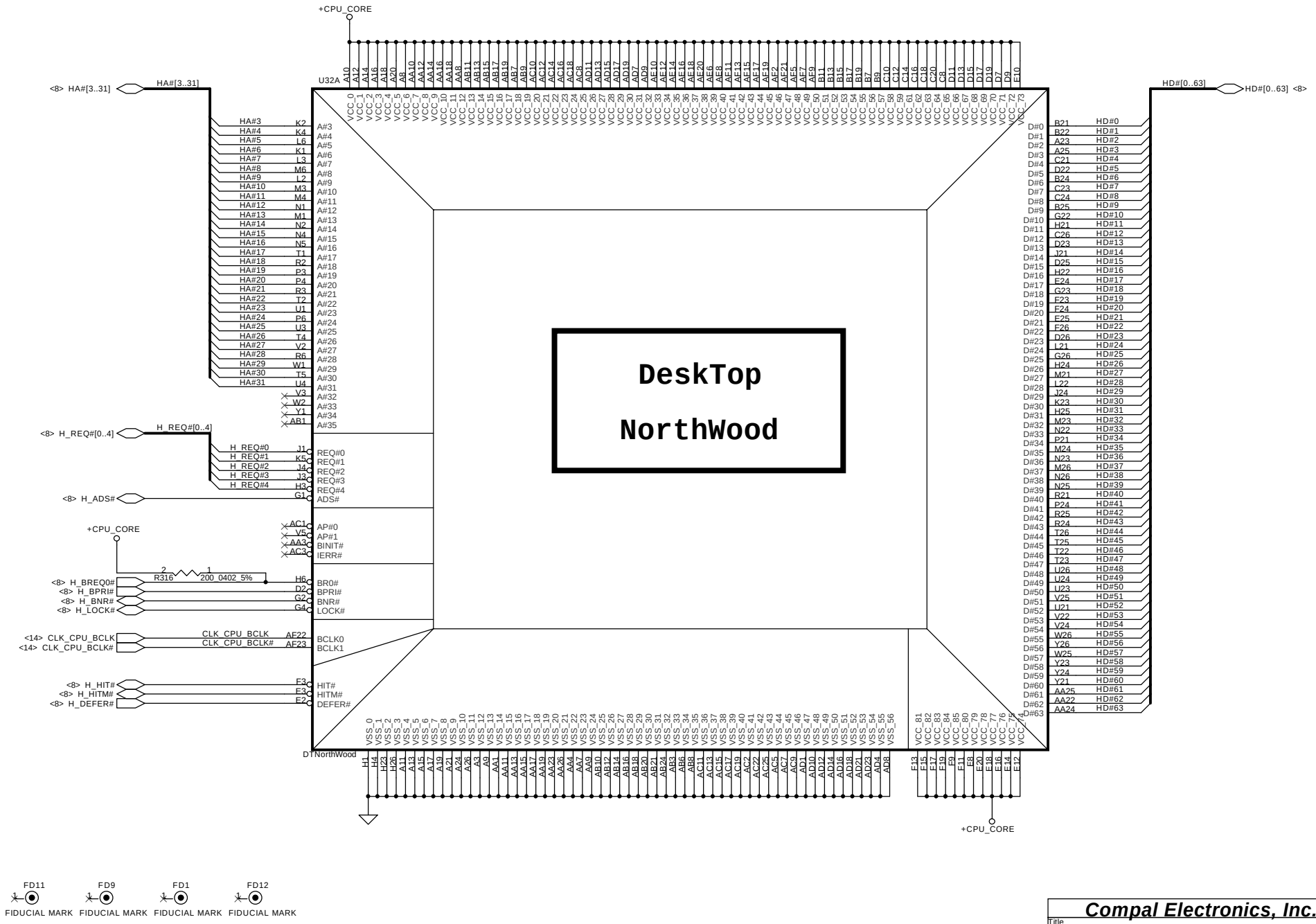


THIS SHEET OF ENGINEERING DRAWING IS THE PROPRIETARY PROPERTY OF COMPAL ELECTRONICS, INC. AND CONTAINS CONFIDENTIAL AND TRADE SECRET INFORMATION. THIS SHEET MAY NOT BE TRANSFERRED FROM THE CUSTODY OF THE COMPETENT DIVISION OF R&D DEPARTMENT EXCEPT AS AUTHORIZED BY COMPAL ELECTRONICS, INC. NEITHER THIS SHEET NOR THE INFORMATION CONTAINS MAY BE USED BY OR DISCLOSED TO ANY THIRD PARTY WITHOUT PRIOR WRITTEN CONSENT OF COMPAL ELECTRONICS, INC.

**Compal Electronics, Inc.**

Title: SCHEMATIC, M/B LA-1591

Size: Custom | Document Number: 401235 | Rev: 2B

Date: ¬P期五, 五月 16, 2003 | Sheet 4 of 47

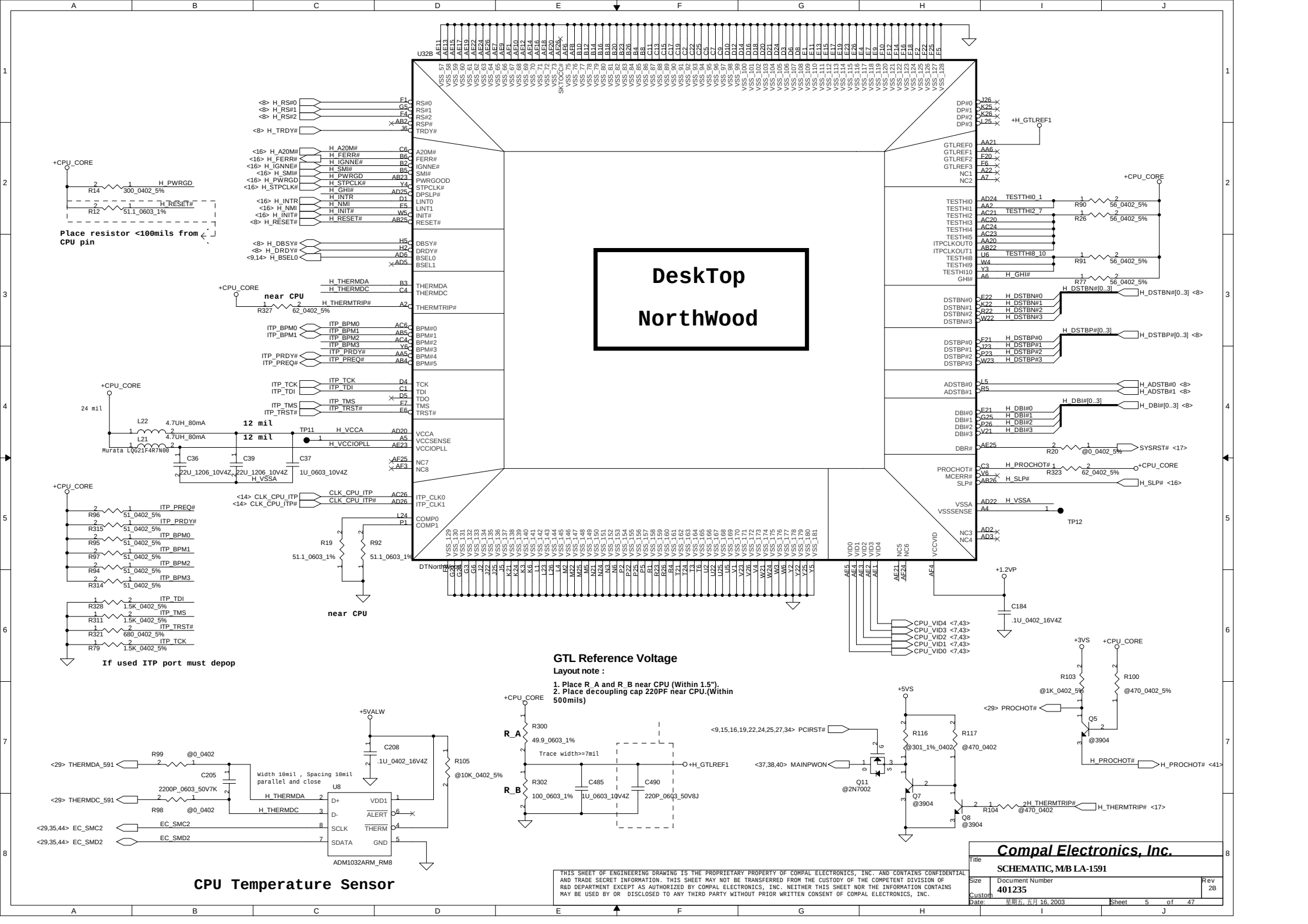


THIS SHEET OF ENGINEERING DRAWING IS THE PROPRIETARY PROPERTY OF COMPAL ELECTRONICS, INC. AND CONTAINS CONFIDENTIAL AND TRADE SECRET INFORMATION. THIS SHEET MAY NOT BE TRANSFERRED FROM THE CUSTODY OF THE COMPETENT DIVISION OF R&D DEPARTMENT EXCEPT AS AUTHORIZED BY COMPAL ELECTRONICS, INC. NEITHER THIS SHEET NOR THE INFORMATION CONTAINS MAY BE USED BY OR DISCLOSED TO ANY THIRD PARTY WITHOUT PRIOR WRITTEN CONSENT OF COMPAL ELECTRONICS, INC.

**Layout note :**

Place close to CPU, Use 2~3 vias per PAD.
Place .22uF caps underneath balls on solder side.
Place 10uF caps on the peripheral near balls.
Use 2~3 vias per PAD.

**Please place these cap in the socket cavity area**

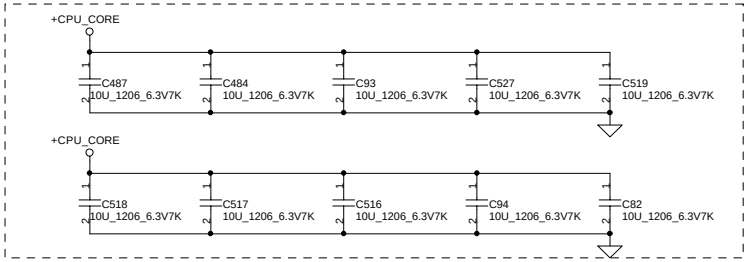


**Please place these cap on the socket north side**

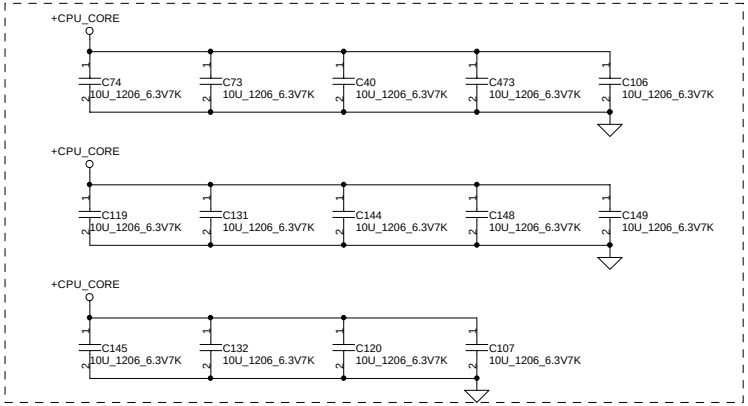


**Please place these cap on the socket south side**

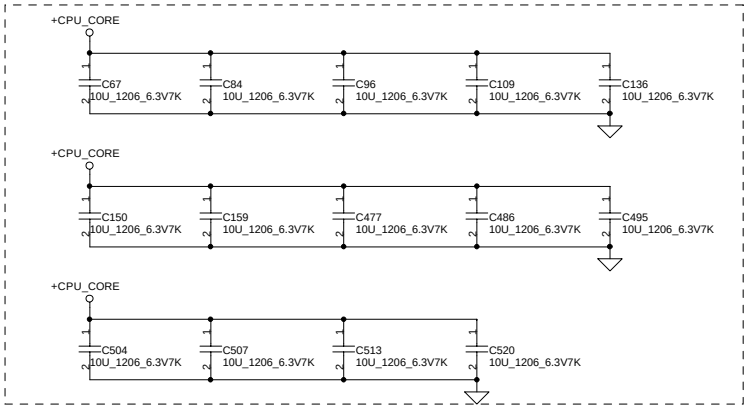


**Layout note :**

Place close to CPU power and ground pin as possible (<1inch)

**For Desktop's CPU:**

ESR total=0.75m ohm
C total=6350uF

**For Mobile's CPU:**

ESR total=1.875m ohm
C total=2590uF

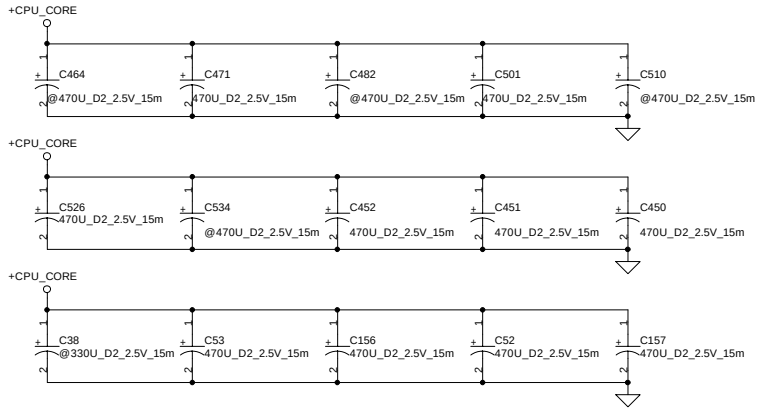


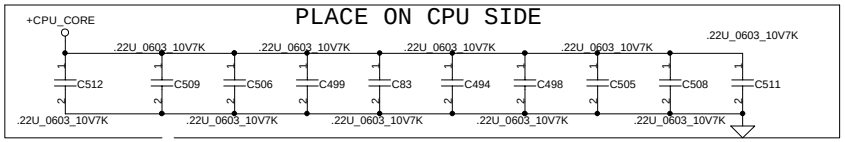


## Fan1 Control circuit

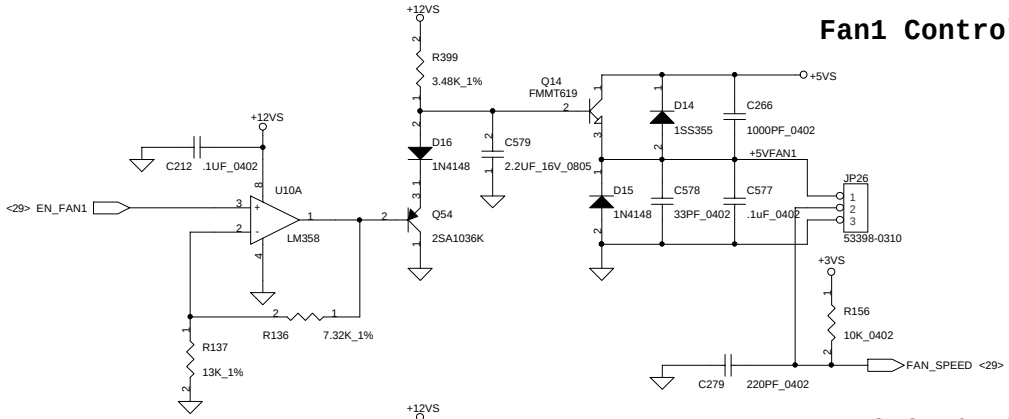


## Fan2 Control circuit

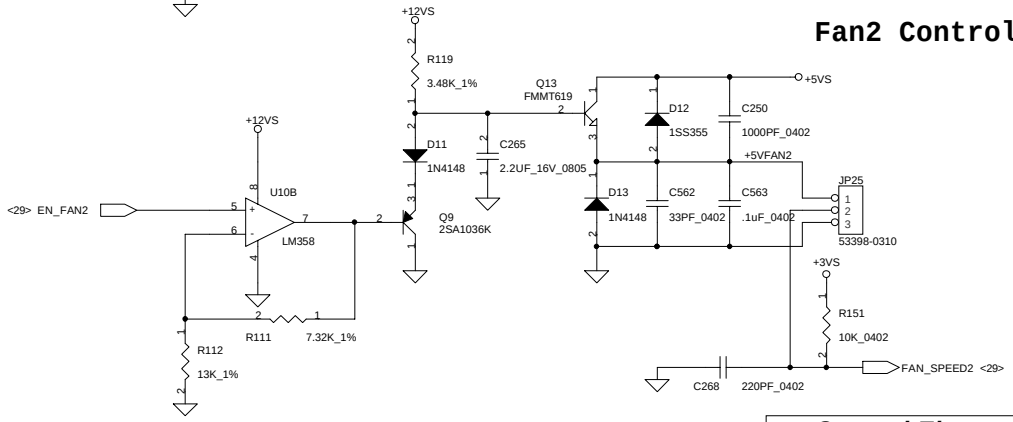


THIS SHEET OF ENGINEERING DRAWING IS THE PROPRIETARY PROPERTY OF COMPAL ELECTRONICS, INC. AND CONTAINS CONFIDENTIAL AND TRADE SECRET INFORMATION. THIS SHEET MAY NOT BE TRANSFERRED FROM THE CUSTODY OF THE COMPETENT DIVISION OF R&D DEPARTMENT EXCEPT AS AUTHORIZED BY COMPAL ELECTRONICS, INC. NEITHER THIS SHEET NOR THE INFORMATION CONTAINS MAY BE USED BY OR DISCLOSED TO ANY THIRD PARTY WITHOUT PRIOR WRITTEN CONSENT OF COMPAL ELECTRONICS, INC.

**Compal Electronics, Inc.**

| | | |
|---|---|---|
| Title | SCHEMATIC, M/B LA-1591 | |
| Size | Document Number 401235 | Rev 2B |
| Custom | | |
| Date: 星期五, 五月 16, 2003 | Sheet 6 of 47 | |

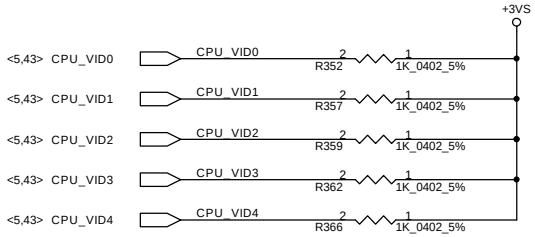


| | Mobile CPU | | | | | Desktop CPU | | | | |
|---|---|---|---|---|---|---|---|---|---|---|
| MO/DT_CPU | 1 | | | | | 0 | | | | |
| VID / VCC | 4 | 3 | 2 | 1 | 0 | 4 | 3 | 2 | 1 | 0 |
| 1.750V | 0 | 0 | 0 | 0 | 0 | 0 | 0 | 1 | 0 | 0 |
| 1.700V | 0 | 0 | 0 | 0 | 1 | 0 | 0 | 1 | 1 | 0 |
| 1.650V | 0 | 0 | 0 | 1 | 0 | 0 | 1 | 0 | 0 | 0 |
| 1.600V | 0 | 0 | 0 | 1 | 1 | 0 | 1 | 0 | 1 | 0 |
| 1.550V | 0 | 0 | 1 | 0 | 0 | 0 | 1 | 1 | 0 | 0 |
| 1.500V | 0 | 0 | 1 | 0 | 1 | 0 | 1 | 1 | 1 | 0 |
| 1.450V | 0 | 0 | 1 | 1 | 0 | 1 | 0 | 0 | 0 | 0 |
| 1.400V | 0 | 0 | 1 | 1 | 1 | 1 | 0 | 0 | 1 | 0 |
| 1.350V | 0 | 1 | 0 | 0 | 0 | 1 | 0 | 1 | 0 | 0 |
| 1.300V | 0 | 1 | 0 | 0 | 1 | 1 | 0 | 1 | 1 | 0 |
| 1.250V | 0 | 1 | 0 | 1 | 0 | 1 | 1 | 0 | 0 | 0 |
| 1.200V | 0 | 1 | 0 | 1 | 1 | 1 | 1 | 0 | 1 | 0 |
| 1.150V | 0 | 1 | 1 | 0 | 0 | 1 | 1 | 1 | 0 | 0 |
| 1.100V | 0 | 1 | 1 | 0 | 1 | 1 | 1 | 1 | 1 | 0 |
| 1.050V | 0 | 1 | 1 | 1 | 0 | X | X | X | X | X |
| 1.000V | 0 | 1 | 1 | 1 | 1 | X | X | X | X | X |
| 0.975V | 1 | 0 | 0 | 0 | 0 | X | X | X | X | X |
| 0.950V | 1 | 0 | 0 | 0 | 1 | X | X | X | X | X |
| 0.925V | 1 | 0 | 0 | 1 | 0 | X | X | X | X | X |
| 0.900V | 1 | 0 | 0 | 1 | 1 | X | X | X | X | X |
| 0.875V | 1 | 0 | 1 | 0 | 0 | X | X | X | X | X |
| 0.850V | 1 | 0 | 1 | 0 | 1 | X | X | X | X | X |
| 0.825V | 1 | 0 | 1 | 1 | 0 | X | X | X | X | X |
| 0.800V | 1 | 0 | 1 | 1 | 1 | X | X | X | X | X |
| 0.775V | 1 | 1 | 0 | 0 | 0 | X | X | X | X | X |
| 0.750V | 1 | 1 | 0 | 0 | 1 | X | X | X | X | X |
| 0.725V | 1 | 1 | 0 | 1 | 0 | X | X | X | X | X |
| 0.700V | 1 | 1 | 0 | 1 | 1 | X | X | X | X | X |
| 0.675V | 1 | 1 | 1 | 0 | 0 | X | X | X | X | X |
| 0.650V | 1 | 1 | 1 | 0 | 1 | X | X | X | X | X |
| 0.625V | 1 | 1 | 1 | 1 | 0 | X | X | X | X | X |
| 0.600V | 1 | 1 | 1 | 1 | 1 | X | X | X | X | X |
| VRM output off | | | | | | 1 | 1 | 1 | 1 | 1 |

# TV_OUT CONNECTOR

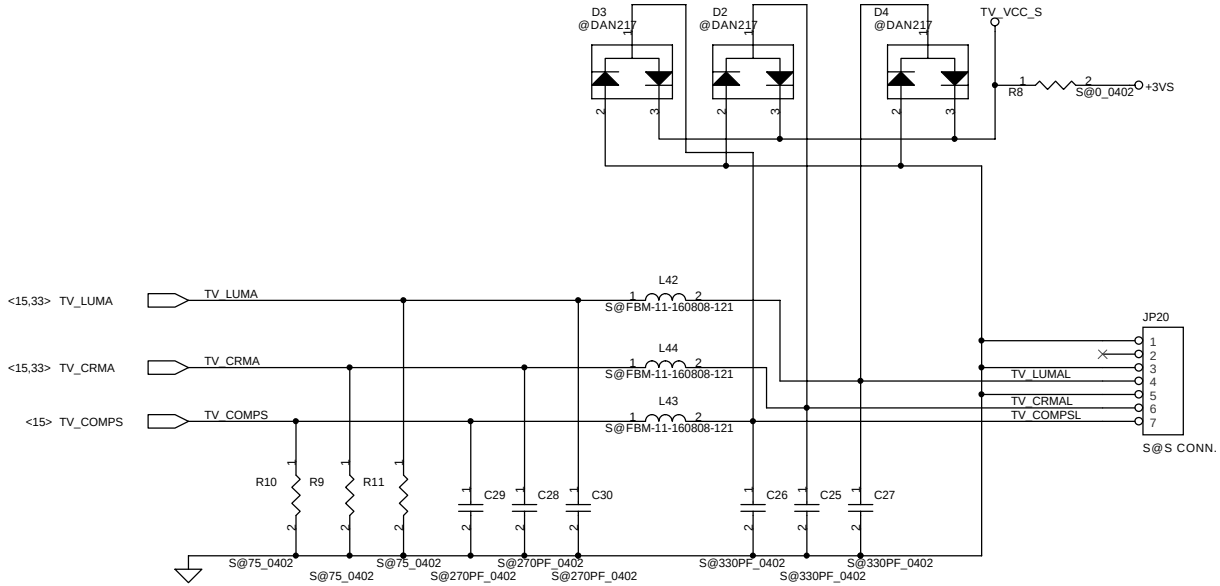


THIS SHEET OF ENGINEERING DRAWING IS THE PROPRIETARY PROPERTY OF COMPAL ELECTRONICS, INC. AND CONTAINS CONFIDENTIAL AND TRADE SECRET INFORMATION. THIS SHEET MAY NOT BE TRANSFERRED FROM THE CUSTODY OF THE COMPETENT DIVISION OF R&D DEPARTMENT EXCEPT AS AUTHORIZED BY COMPAL ELECTRONICS, INC. NEITHER THIS SHEET NOR THE INFORMATION CONTAINS MAY BE USED BY OR DISCLOSED TO ANY THIRD PARTY WITHOUT PRIOR WRITTEN CONSENT OF COMPAL ELECTRONICS, INC.

**Compal Electronics, Inc.**

Title: SCHEMATIC, M/B LA-1591

Size: Custom | Document Number: 401235 | Rev: 2B

Date: ¬P期五, 五月 16, 2003 | Sheet 7 of 47

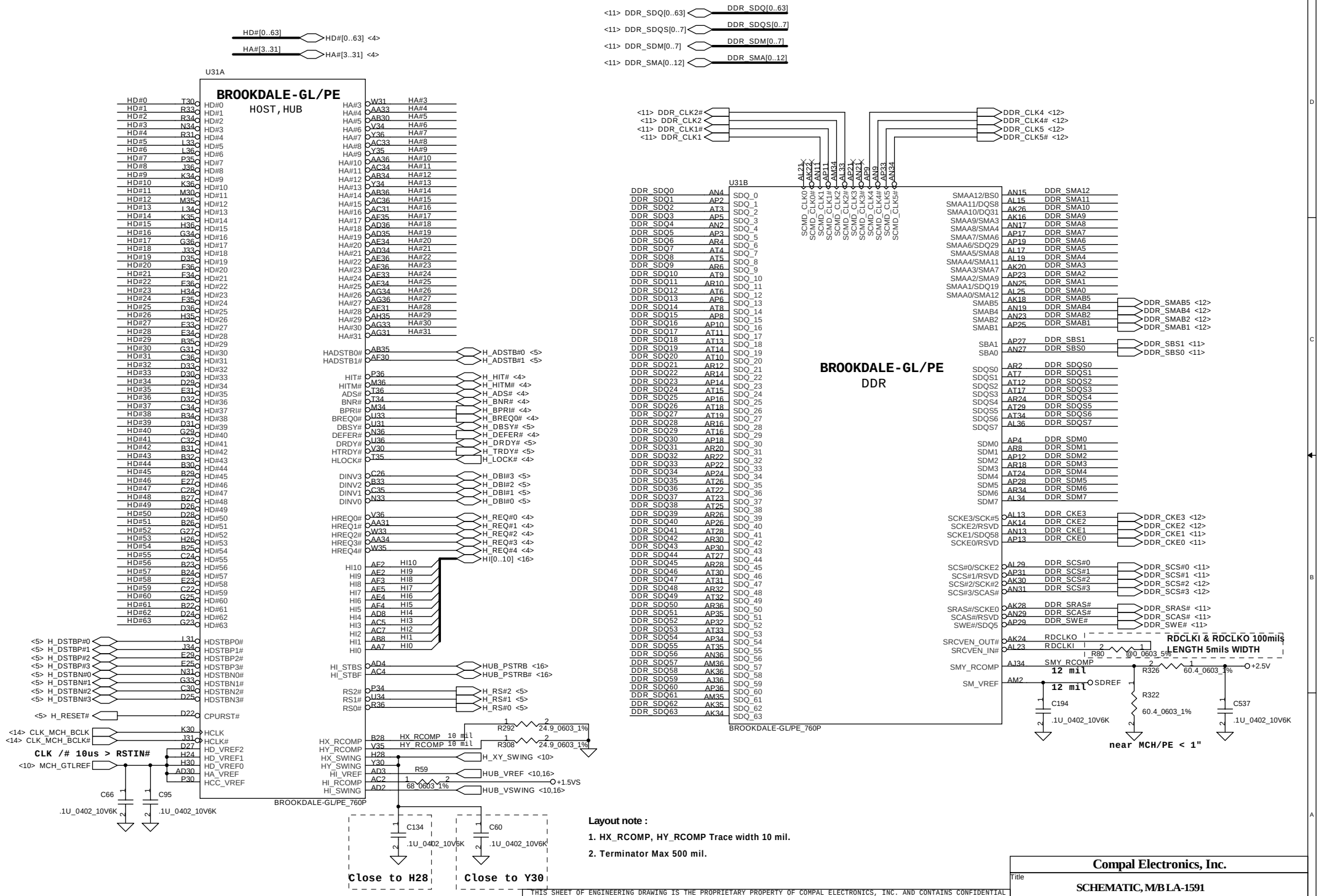


**Layout note :**

1. HX_RCOMP, HY_RCOMP Trace width 10 mil.
2. Terminator Max 500 mil.

THIS SHEET OF ENGINEERING DRAWING IS THE PROPRIETARY PROPERTY OF COMPAL ELECTRONICS, INC. AND CONTAINS CONFIDENTIAL AND TRADE SECRET INFORMATION. THIS SHEET MAY NOT BE TRANSFERRED FROM THE CUSTODY OF THE COMPETENT DIVISION OF R&D DEPARTMENT EXCEPT AS AUTHORIZED BY COMPAL ELECTRONICS, INC. NEITHER THIS SHEET NOR THE INFORMATION CONTAINS MAY BE USED BY OR DISCLOSED TO ANY THIRD PARTY WITHOUT PRIOR WRITTEN CONSENT OF COMPAL ELECTRONICS, INC.

| | | | |
|---|---|---|---|
| Compal Electronics, Inc. | | | |
| Title | SCHEMATIC, M/B LA-1591 | | |
| Size | Document Number 401235 | | Rev 2B |
| Date: ¬P期五, 五月 16, 2003 | Sheet 8 of 47 | | |

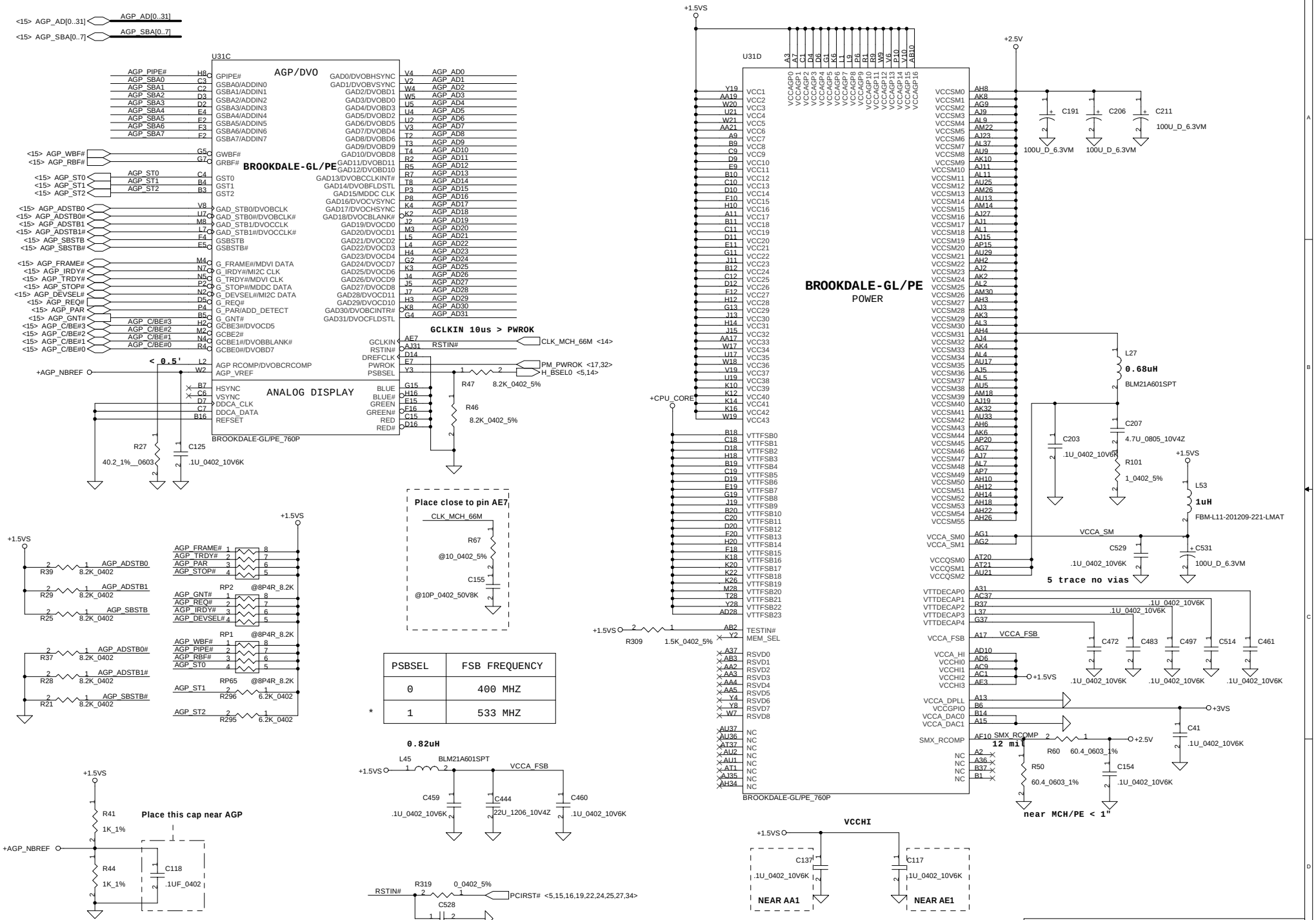


| PSBSEL | FSB FREQUENCY |
|---|---|
| 0 | 400 MHZ |
| * 1 | 533 MHZ |

THIS SHEET OF ENGINEERING DRAWING IS THE PROPRIETARY PROPERTY OF COMPAL ELECTRONICS, INC. AND CONTAINS CONFIDENTIAL AND TRADE SECRET INFORMATION. THIS SHEET MAY NOT BE TRANSFERRED FROM THE CUSTODY OF THE COMPETENT DIVISION OF R&D DEPARTMENT EXCEPT AS AUTHORIZED BY COMPAL ELECTRONICS, INC. NEITHER THIS SHEET NOR THE INFORMATION CONTAINS MAY BE USED BY OR DISCLOSED TO ANY THIRD PARTY WITHOUT PRIOR WRITTEN CONSENT OF COMPAL ELECTRONICS, INC.

**Compal Electronics, Inc.**

Title: SCHEMATIC, M/B LA-1591

Size: | Document Number: 401235 | Rev: 2B

Date: 星期五, 五月 16, 2003 | Sheet 9 of 47

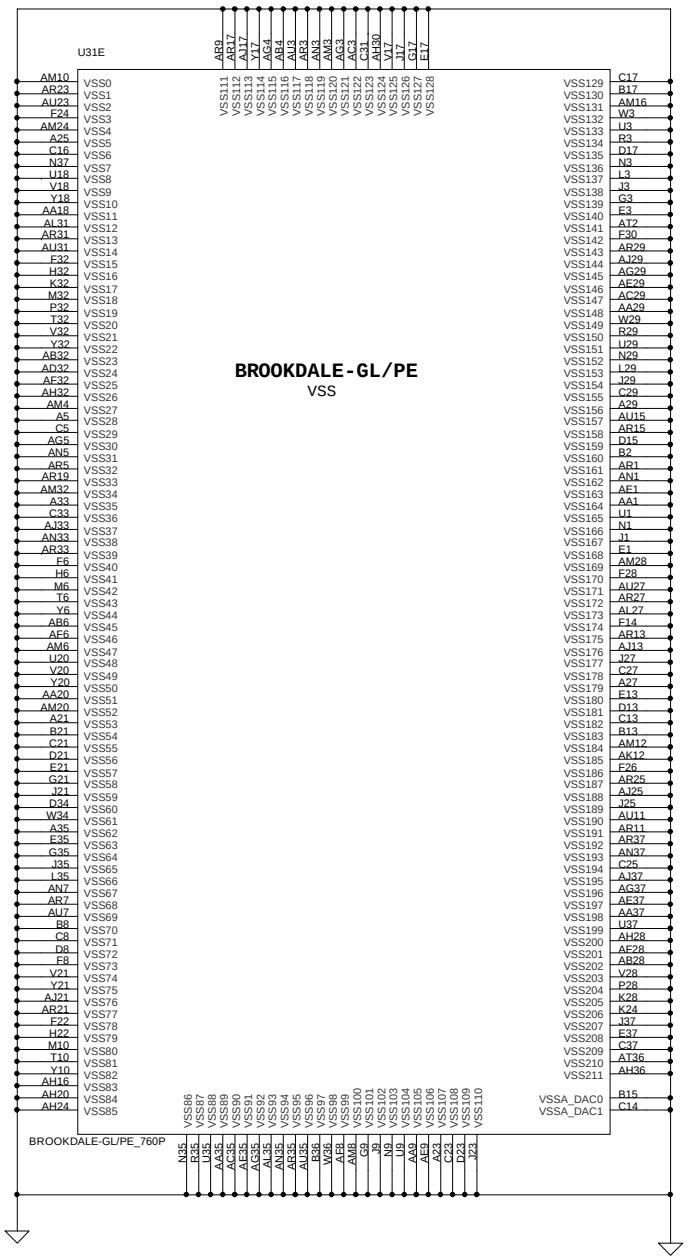


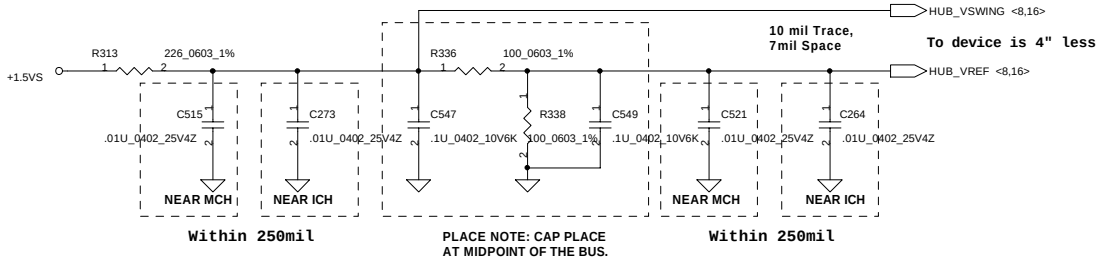


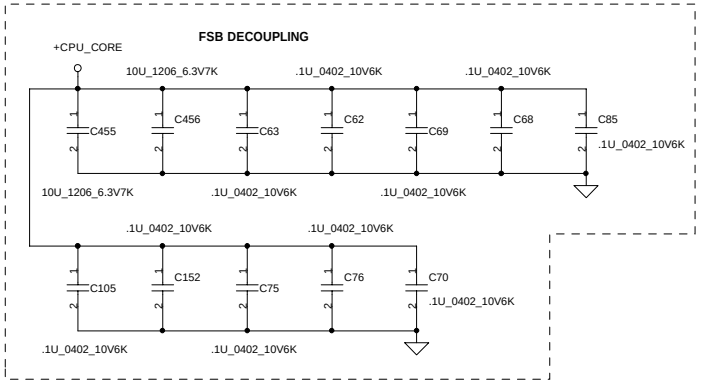


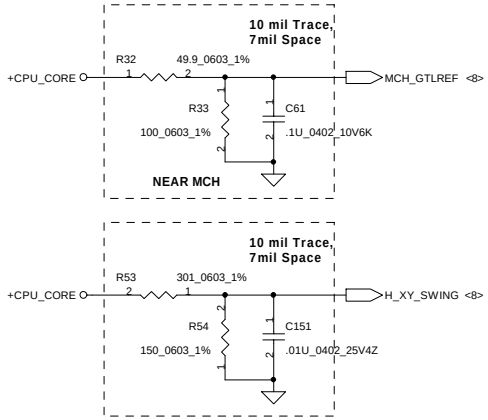


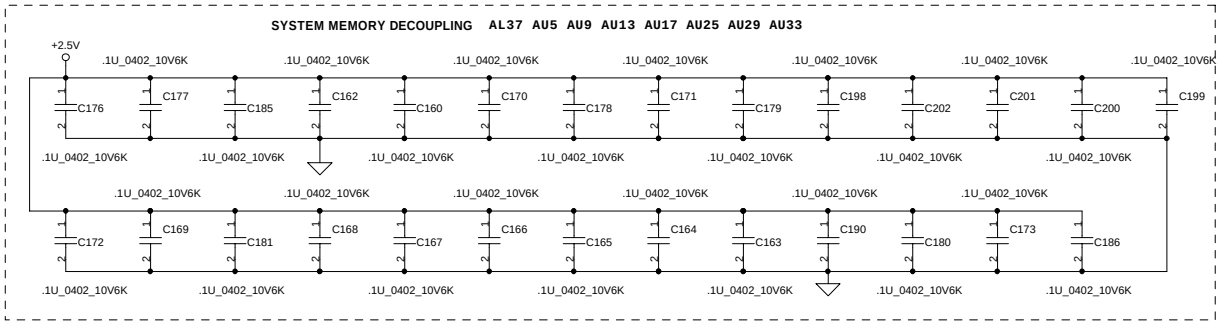


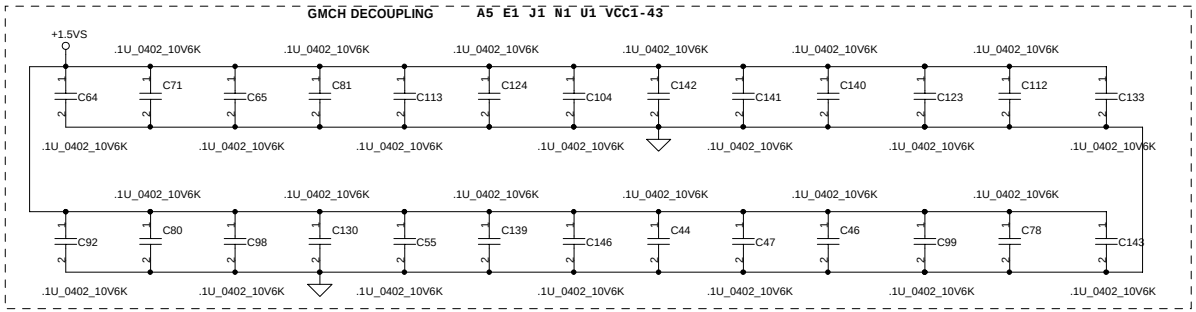


THIS SHEET OF ENGINEERING DRAWING IS THE PROPRIETARY PROPERTY OF COMPAL ELECTRONICS, INC. AND CONTAINS CONFIDENTIAL AND TRADE SECRET INFORMATION. THIS SHEET MAY NOT BE TRANSFERRED FROM THE CUSTODY OF THE COMPETENT DIVISION OF R&D DEPARTMENT EXCEPT AS AUTHORIZED BY COMPAL ELECTRONICS, INC. NEITHER THIS SHEET NOR THE INFORMATION CONTAINS MAY BE USED BY OR DISCLOSED TO ANY THIRD PARTY WITHOUT PRIOR WRITTEN CONSENT OF COMPAL ELECTRONICS, INC.

| | | |
|---|---|---|
| Compal Electronics, Inc. | | |
| Title: SCHEMATIC, M/B LA-1591 | | |
| Size | Document Number: 401235 | Rev 2B |
| Date: 星期五, 五月 16, 2003 | Sheet 10 of 47 | |

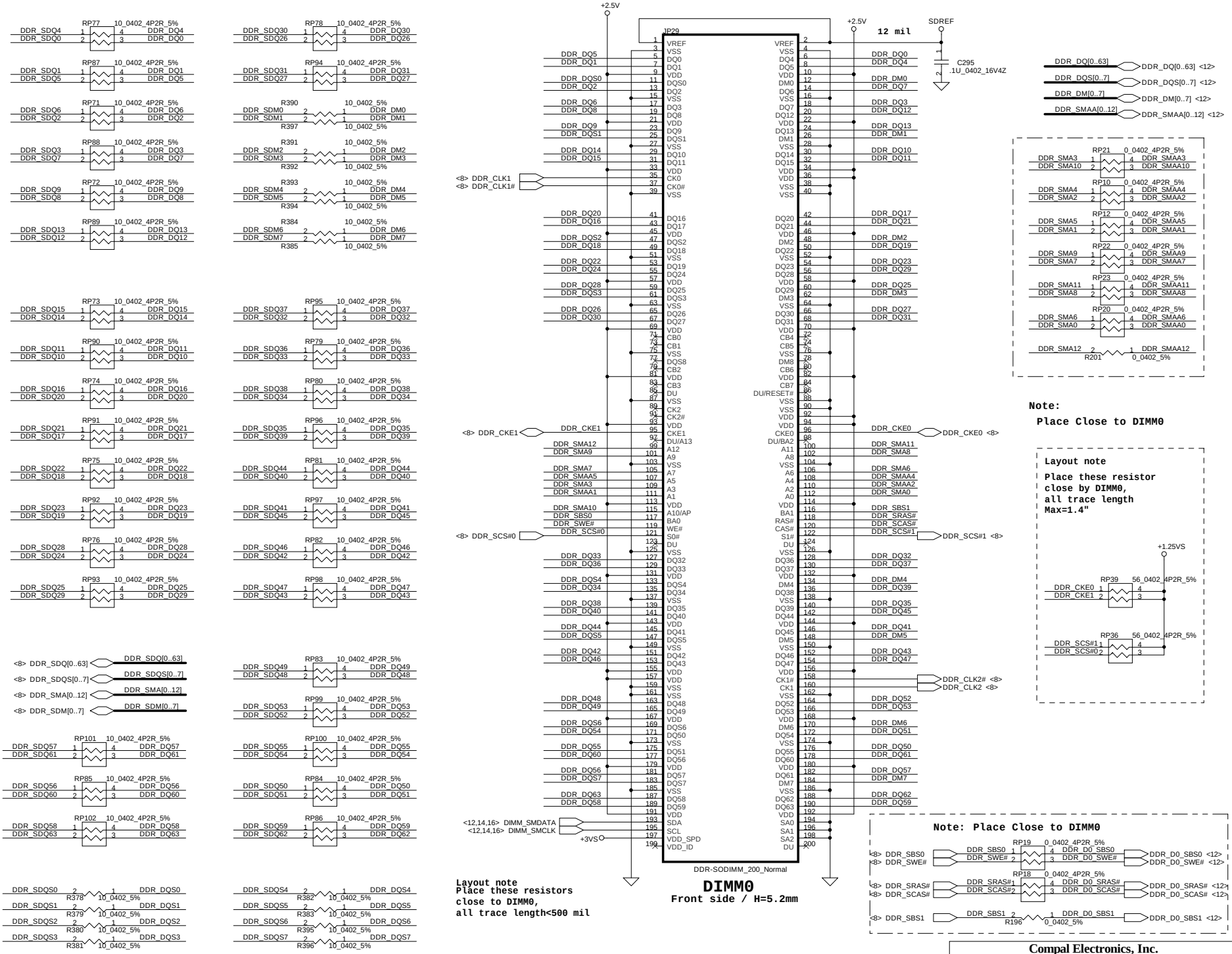


THIS SHEET OF ENGINEERING DRAWING IS THE PROPRIETARY PROPERTY OF COMPAL ELECTRONICS, INC. AND CONTAINS CONFIDENTIAL AND TRADE SECRET INFORMATION. THIS SHEET MAY NOT BE TRANSFERRED FROM THE CUSTODY OF THE COMPETENT DIVISION OF R&D DEPARTMENT EXCEPT AS AUTHORIZED BY COMPAL ELECTRONICS, INC. NEITHER THIS SHEET NOR THE INFORMATION CONTAINS MAY BE USED BY OR DISCLOSED TO ANY THIRD PARTY WITHOUT PRIOR WRITTEN CONSENT OF COMPAL ELECTRONICS, INC.

**Compal Electronics, Inc.**

Title: SCHEMATIC, M/B LA-1591

| Size | Document Number | Rev |
|---|---|---|
| | 401235 | 2B |

Date: 星期五, 五月 16, 2003 Sheet 11 of 47

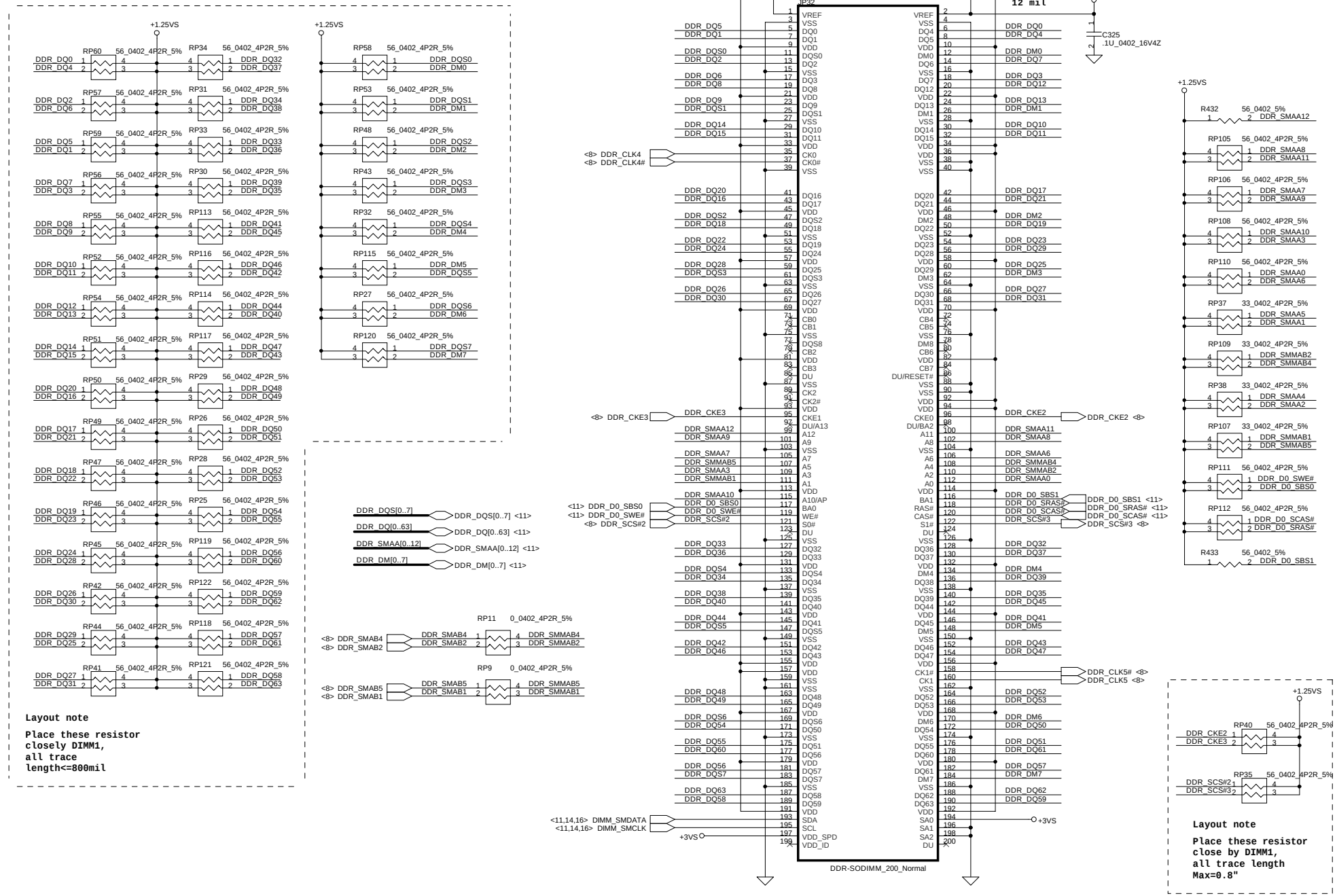


# DIMM1

**Back side / H=9.2mm**

THIS SHEET OF ENGINEERING DRAWING IS THE PROPRIETARY PROPERTY OF COMPAL ELECTRONICS, INC. AND CONTAINS CONFIDENTIAL AND TRADE SECRET INFORMATION. THIS SHEET MAY NOT BE TRANSFERRED FROM THE CUSTODY OF THE COMPETENT DIVISION OF R&D DEPARTMENT EXCEPT AS AUTHORIZED BY COMPAL ELECTRONICS, INC. NEITHER THIS SHEET NOR THE INFORMATION CONTAINS MAY BE USED BY OR DISCLOSED TO ANY THIRD PARTY WITHOUT PRIOR WRITTEN CONSENT OF COMPAL ELECTRONICS, INC.

**Compal Electronics, Inc.**

Title: **SCHEMATIC, M/B LA-1591**

| Size | Document Number | Rev |
|---|---|---|
| | 401235 | 2B |

Date: 星期五, 五月 16, 2003 Sheet 12 of 47

**Layout note :**

**Distribute as close as possible to DDR-SODIMM0.**

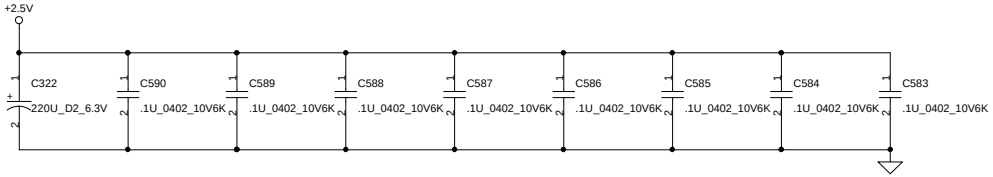


**Layout note :**

**Distribute as close as possible to DDR-SODIMM1.**

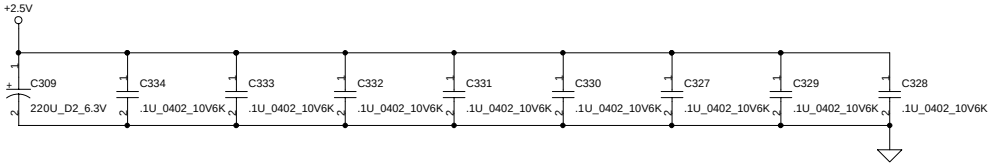


**Layout note :**

**Place one cap close to every 2 pull up resistors termination to +1.25VS**

**50 mil plane**

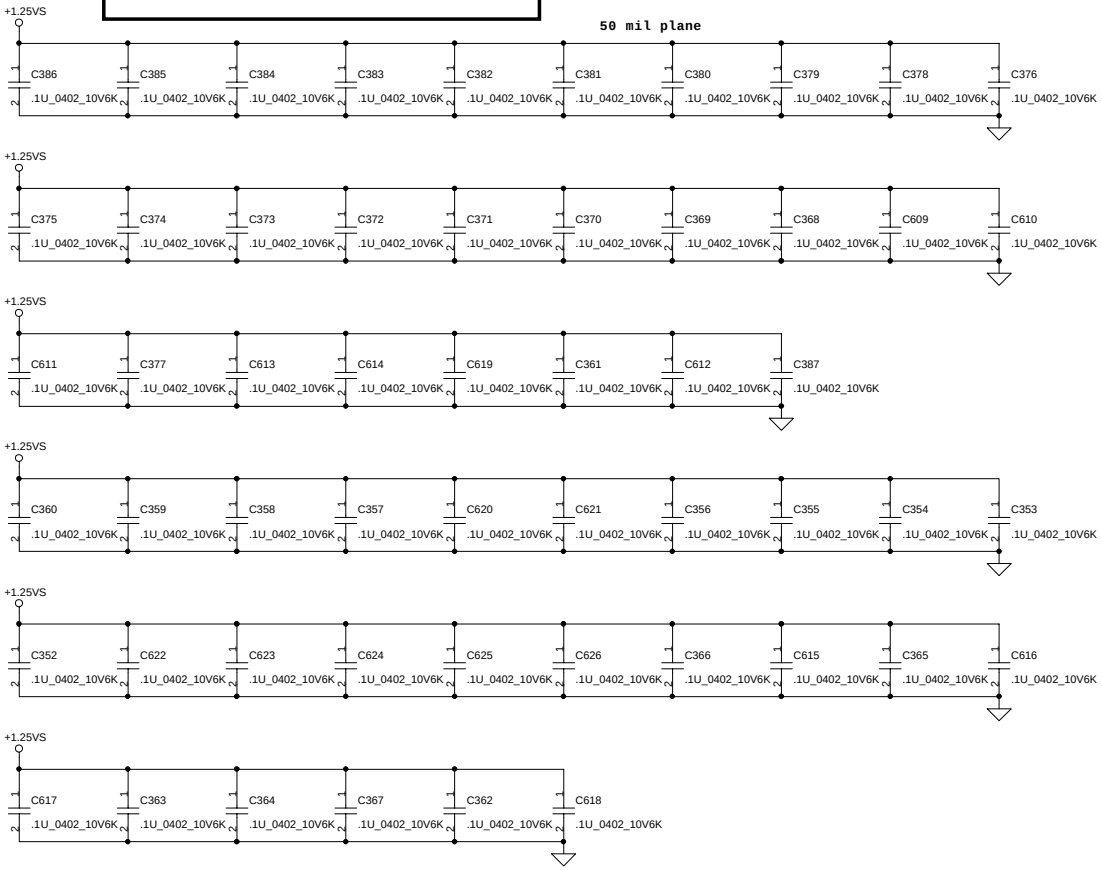


THIS SHEET OF ENGINEERING DRAWING IS THE PROPRIETARY PROPERTY OF COMPAL ELECTRONICS, INC. AND CONTAINS CONFIDENTIAL AND TRADE SECRET INFORMATION. THIS SHEET MAY NOT BE TRANSFERRED FROM THE CUSTODY OF THE COMPETENT DIVISION OF R&D DEPARTMENT EXCEPT AS AUTHORIZED BY COMPAL ELECTRONICS, INC. NEITHER THIS SHEET NOR THE INFORMATION CONTAINS MAY BE USED BY OR DISCLOSED TO ANY THIRD PARTY WITHOUT PRIOR WRITTEN CONSENT OF COMPAL ELECTRONICS, INC.

| | | |
|---|---|---|
| **Compal Electronics, Inc.** | | |
| Title | **SCHEMATIC, M/B LA-1591** | |
| Size | Document Number **401235** | Rev 2B |
| Date: 星期五, 五月 16, 2003 | Sheet 13 of 47 | |

# Clock Generator

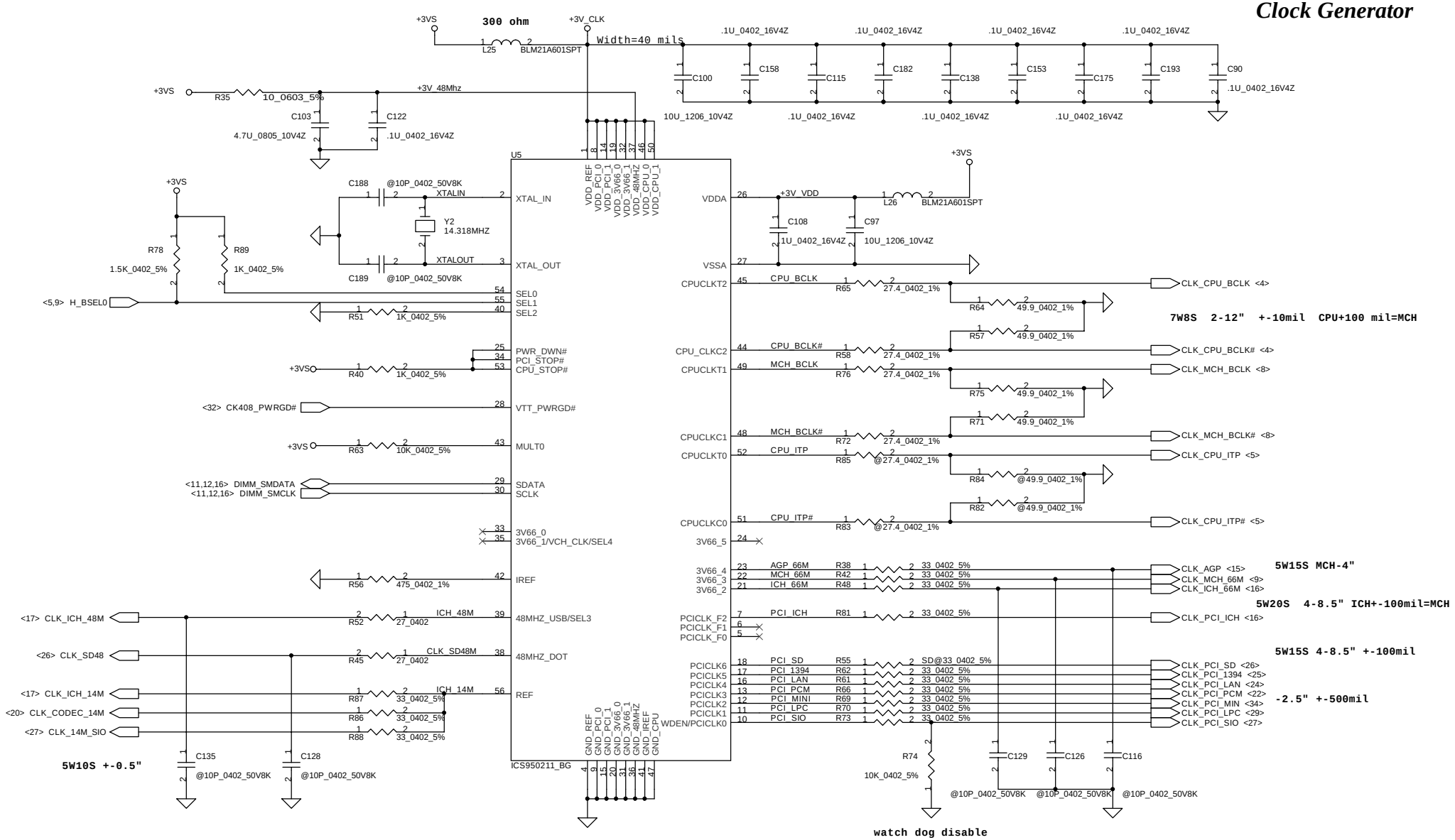


ground plane inside the part pads

one power plane inside the part pads

CPU Frequency Select Table

| | SEL[2:0] | CK-408 Speed |
|---|---|---|
| | 001 | 100 MHZ |
| * | 011 | 133 MHZ |

THIS SHEET OF ENGINEERING DRAWING IS THE PROPRIETARY PROPERTY OF COMPAL ELECTRONICS, INC. AND CONTAINS CONFIDENTIAL AND TRADE SECRET INFORMATION. THIS SHEET MAY NOT BE TRANSFERRED FROM THE CUSTODY OF THE COMPETENT DIVISION OF R&D DEPARTMENT EXCEPT AS AUTHORIZED BY COMPAL ELECTRONICS, INC. NEITHER THIS SHEET NOR THE INFORMATION CONTAINS MAY BE USED BY OR DISCLOSED TO ANY THIRD PARTY WITHOUT PRIOR WRITTEN CONSENT OF COMPAL ELECTRONICS, INC.

Compal Electronics, Inc.

Title: SCHEMATIC, M/B LA-1591

Size | Document Number: 401235 | Rev: 2B

Date: ¬P期五, 五月 16, 2003 | Sheet 14 of 47

# AGP 100X2 Pin connector

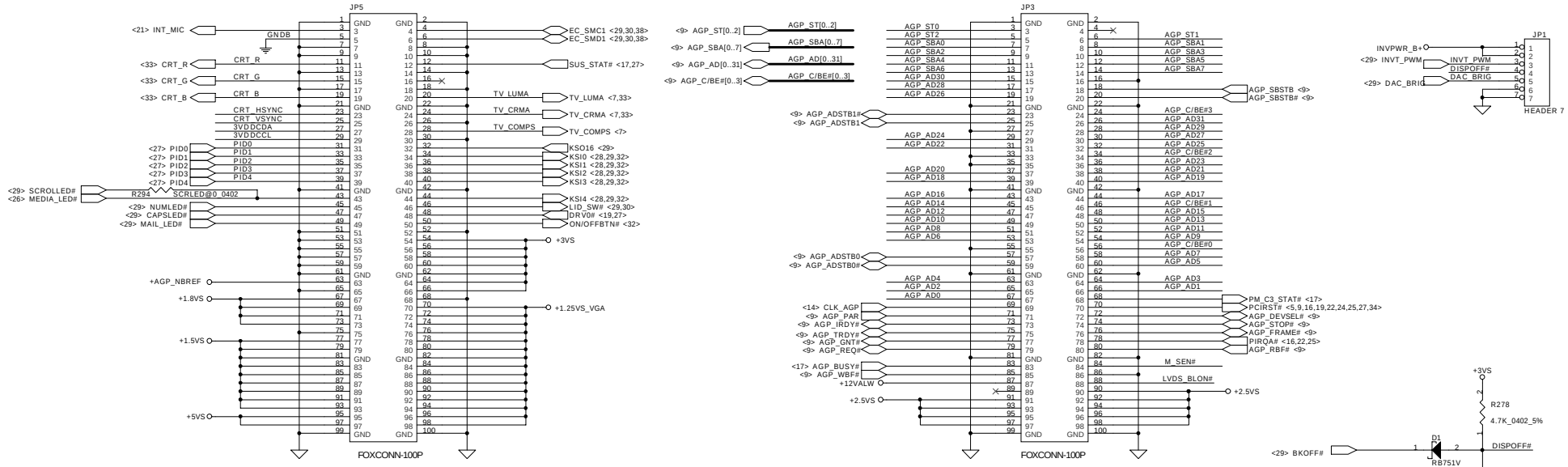


# TV_OUT CONNECTOR

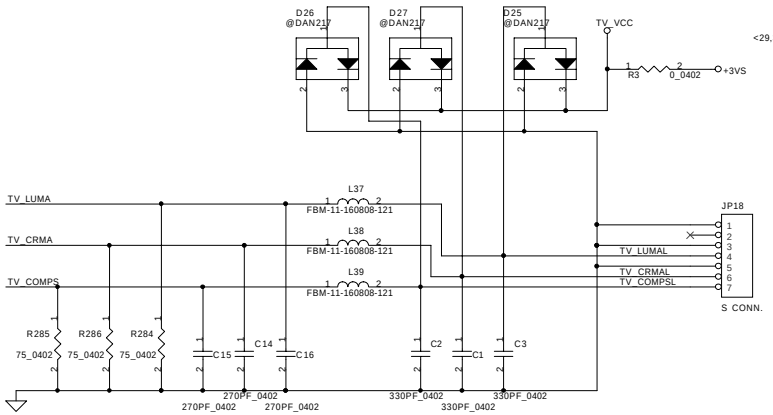


# CRT CONNECTOR

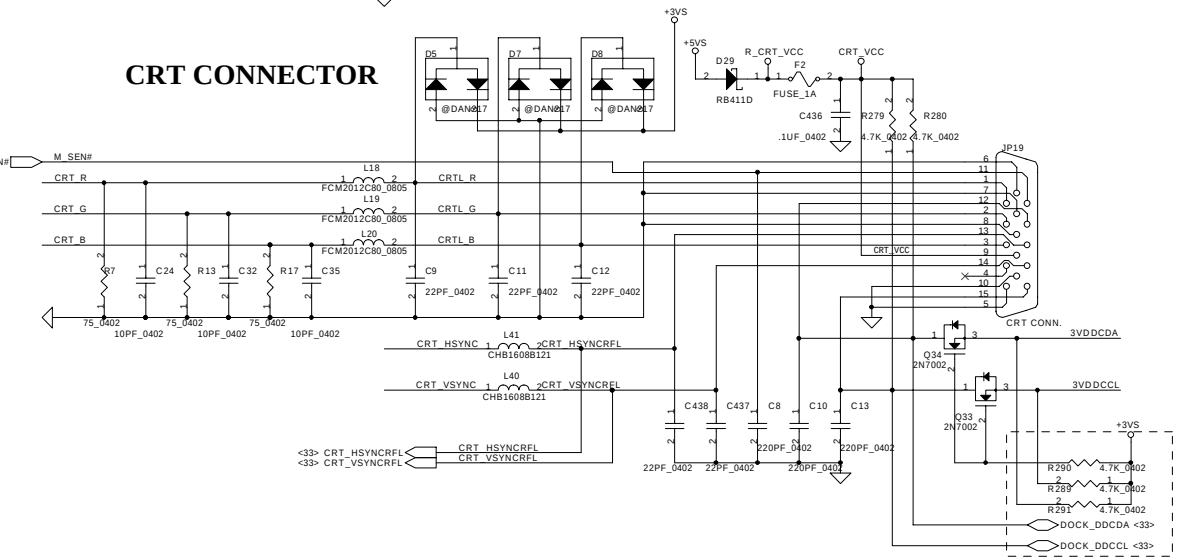


THIS SHEET OF ENGINEERING DRAWING IS THE PROPRIETARY PROPERTY OF COMPAL ELECTRONICS, INC. AND CONTAINS CONFIDENTIAL AND TRADE SECRET INFORMATION. THIS SHEET MAY NOT BE TRANSFERRED FROM THE CUSTODY OF THE COMPETENT DIVISION OF R&D DEPARTMENT EXCEPT AS AUTHORIZED BY COMPAL ELECTRONICS, INC. NEITHER THIS SHEET NOR THE INFORMATION CONTAINS MAY BE USED BY OR DISCLOSED TO ANY THIRD PARTY WITHOUT PRIOR WRITTEN CONSENT OF COMPAL ELECTRONICS, INC.

**Compal Electronics, Inc.**

| | | |
|---|---|---|
| Title | SCHEMATIC, M/B LA-1591 | |
| Size C | Document Number 401235 | Rev 2B |
| Date: 星期 ? 五月 16, 2003 | Sheet 15 of 47 | |

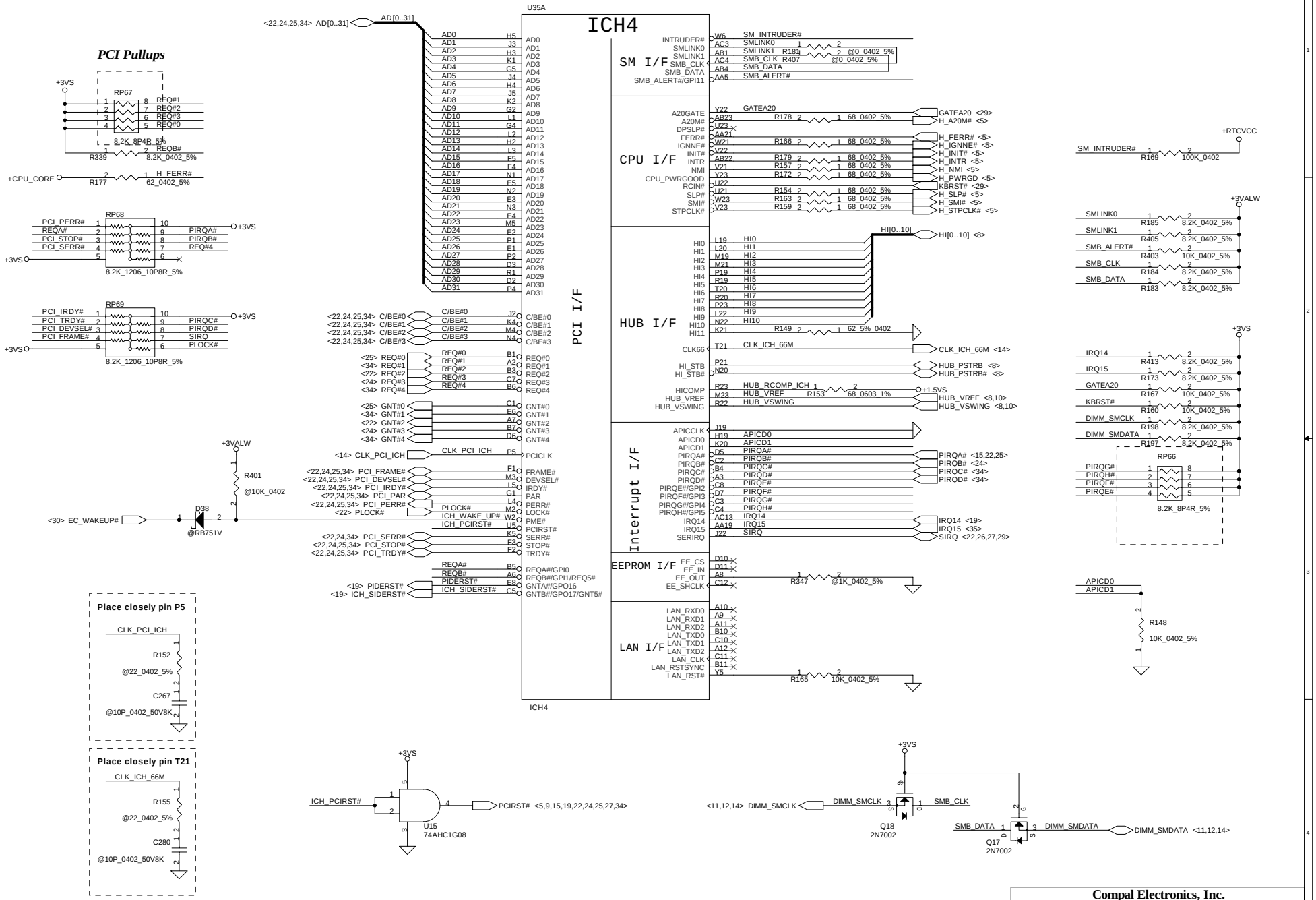


THIS SHEET OF ENGINEERING DRAWING IS THE PROPRIETARY PROPERTY OF COMPAL ELECTRONICS, INC. AND CONTAINS CONFIDENTIAL AND TRADE SECRET INFORMATION. THIS SHEET MAY NOT BE TRANSFERRED FROM THE CUSTODY OF THE COMPETENT DIVISION OF R&D DEPARTMENT EXCEPT AS AUTHORIZED BY COMPAL ELECTRONICS, INC. NEITHER THIS SHEET NOR THE INFORMATION CONTAINS MAY BE USED BY OR DISCLOSED TO ANY THIRD PARTY WITHOUT PRIOR WRITTEN CONSENT OF COMPAL ELECTRONICS, INC.

**Compal Electronics, Inc.**

Title: **SCHEMATIC, M/B LA-1591**

Size: | Document Number: **401235** | Rev: 2B

Date: 星期五, 五月 16, 2003 | Sheet 16 of 47

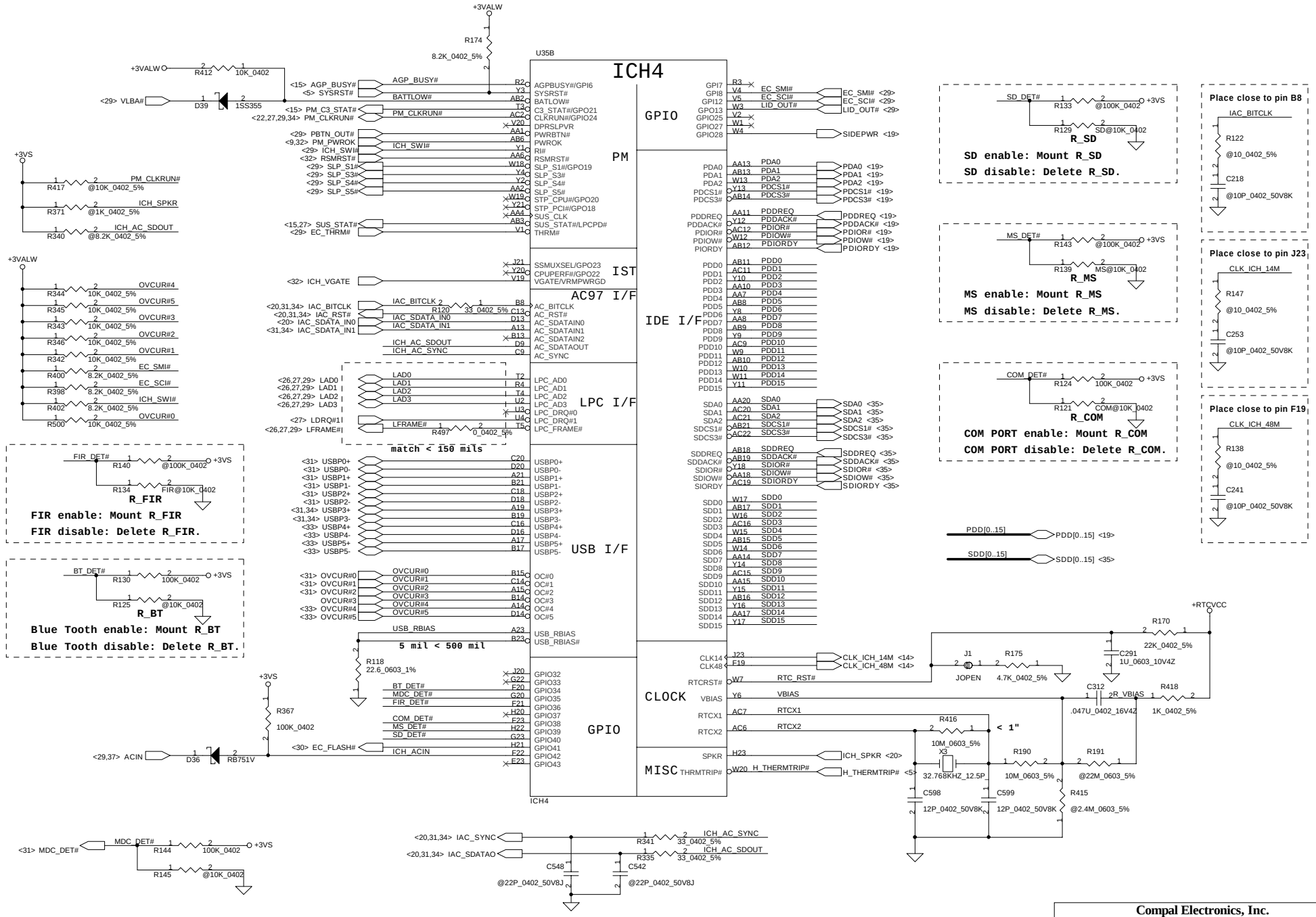


THIS SHEET OF ENGINEERING DRAWING IS THE PROPRIETARY PROPERTY OF COMPAL ELECTRONICS, INC. AND CONTAINS CONFIDENTIAL AND TRADE SECRET INFORMATION. THIS SHEET MAY NOT BE TRANSFERRED FROM THE CUSTODY OF THE COMPETENT DIVISION OF R&D DEPARTMENT EXCEPT AS AUTHORIZED BY COMPAL ELECTRONICS, INC. NEITHER THIS SHEET NOR THE INFORMATION CONTAINS MAY BE USED BY OR DISCLOSED TO ANY THIRD PARTY WITHOUT PRIOR WRITTEN CONSENT OF COMPAL ELECTRONICS, INC.

| | | |
|---|---|---|
| Compal Electronics, Inc. | | |
| Title: SCHEMATIC, M/B LA-1591 | | |
| Size | Document Number: 401235 | Rev: 2B |
| Date: 星期五, 五月 16, 2003 | Sheet 17 of 47 | |

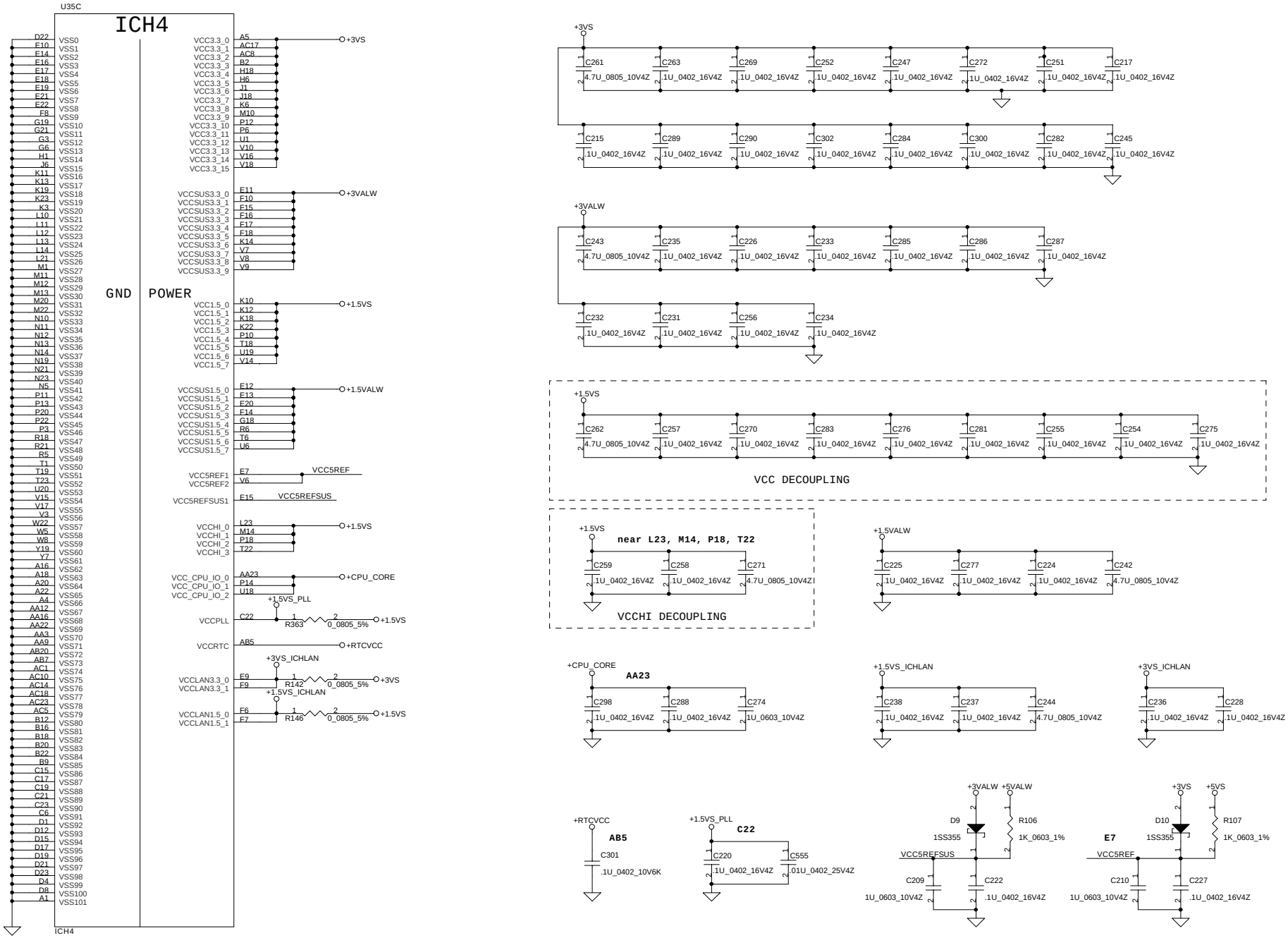


THIS SHEET OF ENGINEERING DRAWING IS THE PROPRIETARY PROPERTY OF COMPAL ELECTRONICS, INC. AND CONTAINS CONFIDENTIAL AND TRADE SECRET INFORMATION. THIS SHEET MAY NOT BE TRANSFERRED FROM THE CUSTODY OF THE COMPETENT DIVISION OF R&D DEPARTMENT EXCEPT AS AUTHORIZED BY COMPAL ELECTRONICS, INC. NEITHER THIS SHEET NOR THE INFORMATION CONTAINS MAY BE USED BY OR DISCLOSED TO ANY THIRD PARTY WITHOUT PRIOR WRITTEN CONSENT OF COMPAL ELECTRONICS, INC.

| | |
|---|---|
| Compal Electronics, Inc. | |
| Title | SCHEMATIC, M/B LA-1591 |
| Size | Document Number 401235 |
| Rev | 2B |
| Date: 星期五, 五月 16, 2003 | Sheet 18 of 47 |

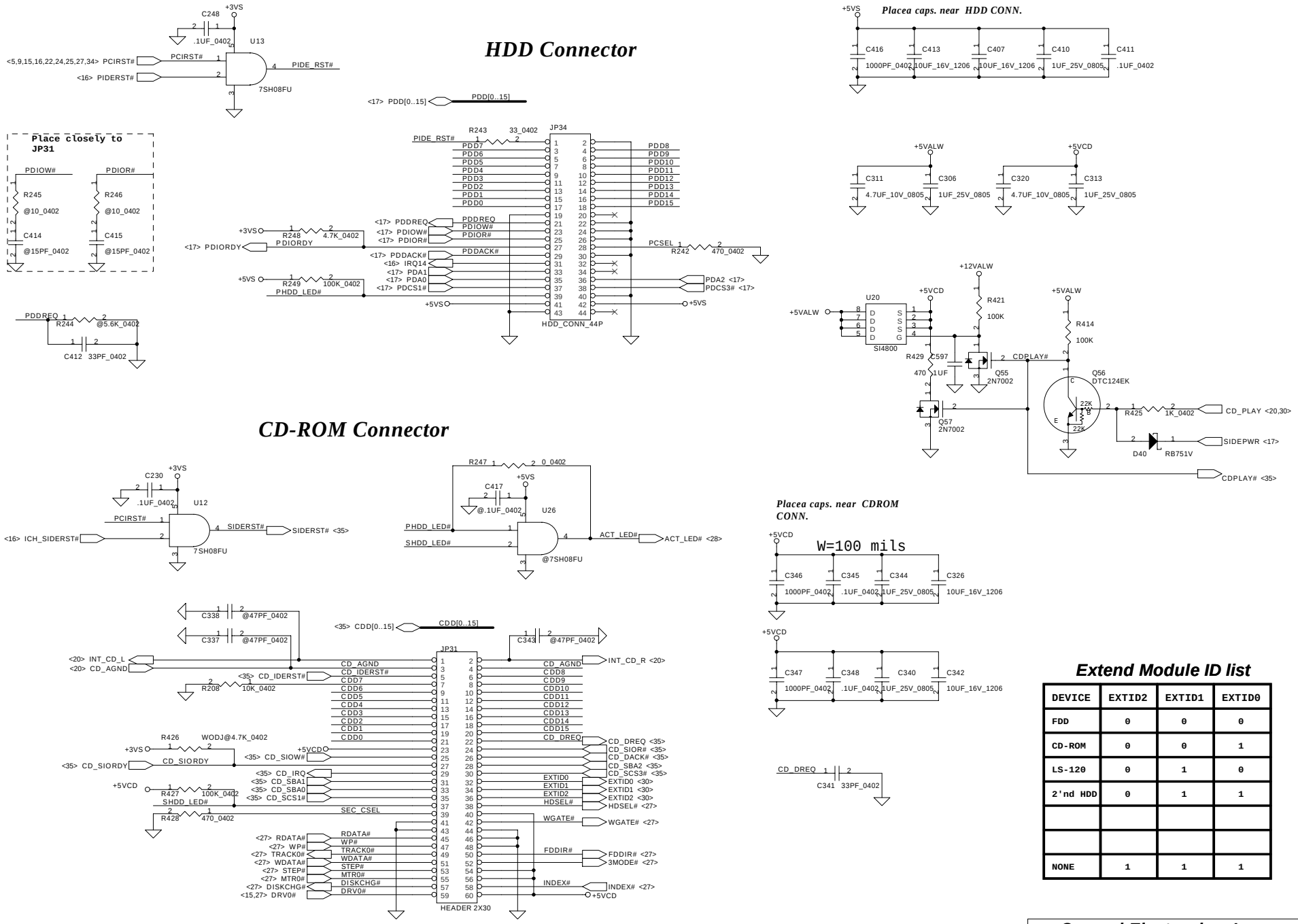


## Extend Module ID list

| DEVICE | EXTID2 | EXTID1 | EXTID0 |
|---|---|---|---|
| FDD | 0 | 0 | 0 |
| CD-ROM | 0 | 0 | 1 |
| LS-120 | 0 | 1 | 0 |
| 2'nd HDD | 0 | 1 | 1 |
| | | | |
| | | | |
| NONE | 1 | 1 | 1 |

**Compal Electronics, Inc.**

Title: SCHEMATIC, M/B LA-1591

Size: Custom | Document Number: 401235 | Rev: 2B

Date: 星 期? 五月 16, 2003 | Sheet 19 of 47

THIS SHEET OF ENGINEERING DRAWING IS THE PROPRIETARY PROPERTY OF COMPAL ELECTRONICS, INC. AND CONTAINS CONFIDENTIAL AND TRADE SECRET INFORMATION. THIS SHEET MAY NOT BE TRANSFERRED FROM THE CUSTODY OF THE COMPETENT DIVISION OF R&D DEPARTMENT EXCEPT AS AUTHORIZED BY COMPAL ELECTRONICS, INC. NEITHER THIS SHEET NOR THE INFORMATION CONTAINS MAY BE USED BY OR DISCLOSED TO ANY THIRD PARTY WITHOUT PRIOR WRITTEN CONSENT OF COMPAL ELECTRONICS, INC.

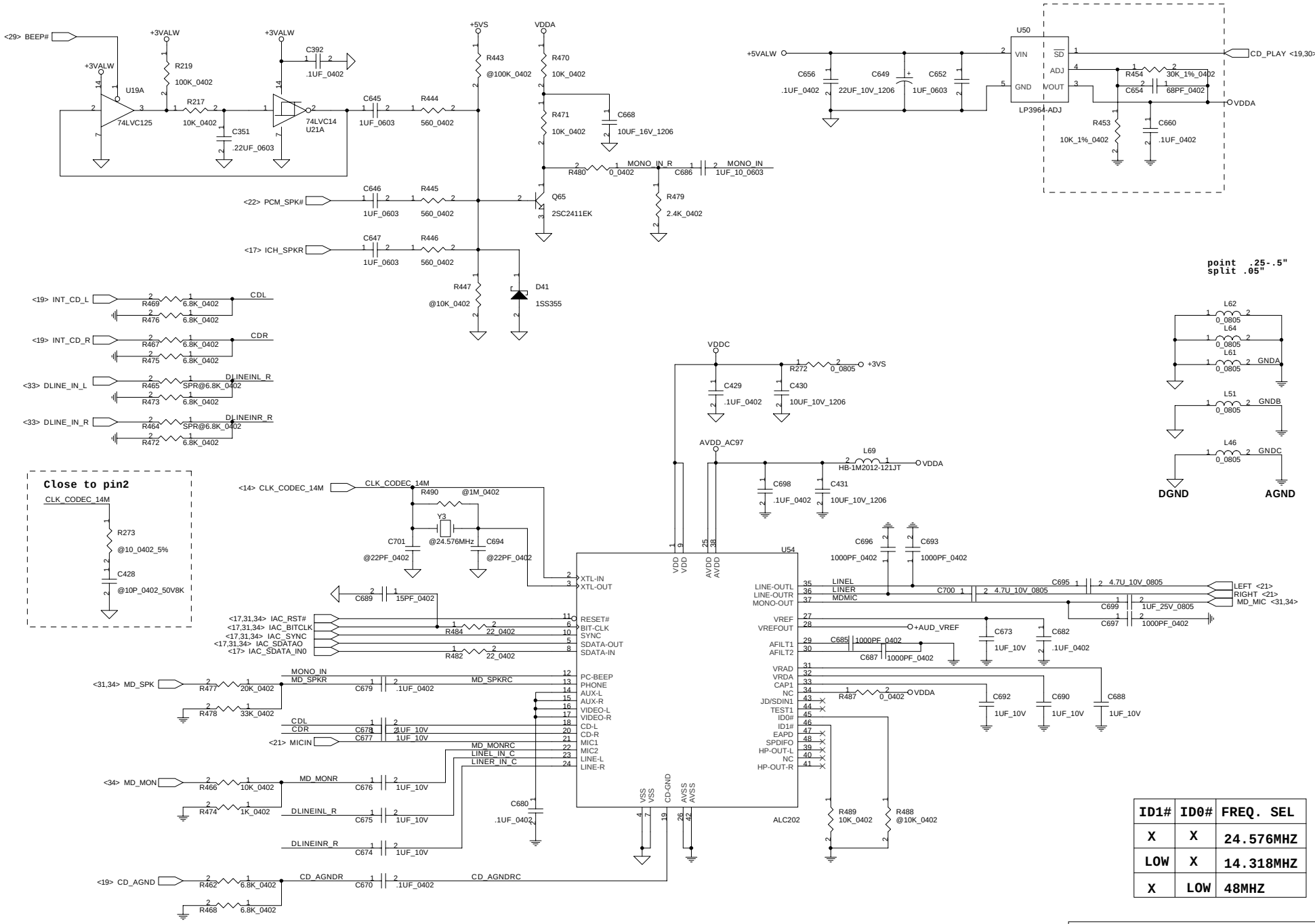


| ID1# | ID0# | FREQ. SEL |
|---|---|---|
| X | X | 24.576MHZ |
| LOW | X | 14.318MHZ |
| X | LOW | 48MHZ |

THIS SHEET OF ENGINEERING DRAWING IS THE PROPRIETARY PROPERTY OF COMPAL ELECTRONICS, INC. AND CONTAINS CONFIDENTIAL AND TRADE SECRET INFORMATION. THIS SHEET MAY NOT BE TRANSFERRED FROM THE CUSTODY OF THE COMPETENT DIVISION OF R&D DEPARTMENT EXCEPT AS AUTHORIZED BY COMPAL ELECTRONICS, INC. NEITHER THIS SHEET NOR THE INFORMATION CONTAINS MAY BE USED BY OR DISCLOSED TO ANY THIRD PARTY WITHOUT PRIOR WRITTEN CONSENT OF COMPAL ELECTRONICS, INC.

**Compal Electronics, Inc.**

Title: SCHEMATIC, M/B LA-1591

Size: Custom | Document Number: 401235 | Rev: 2B

Date: 星期五, 五月 16, 2003 | Sheet 20 of 47

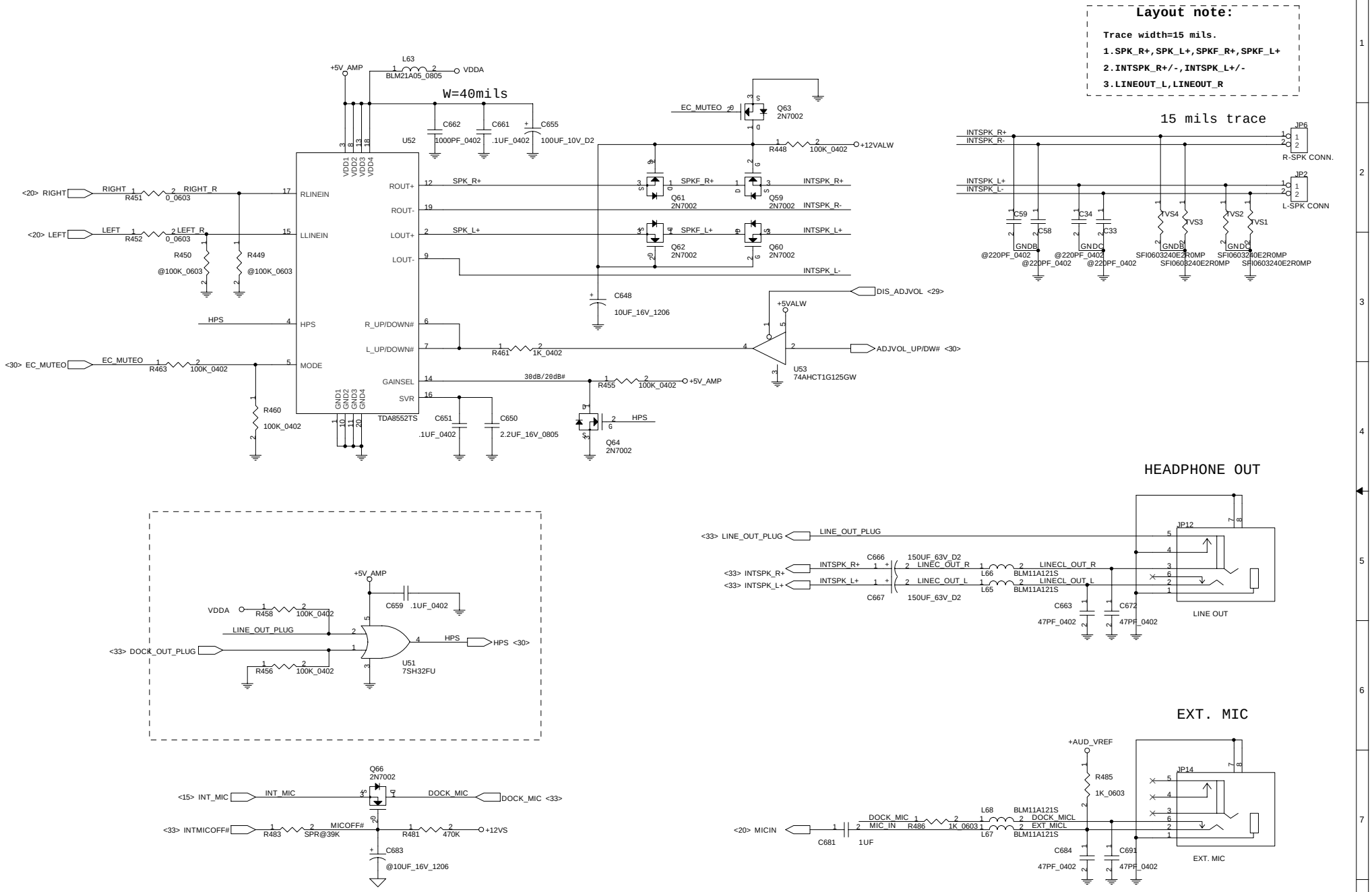


THIS SHEET OF ENGINEERING DRAWING IS THE PROPRIETARY PROPERTY OF COMPAL ELECTRONICS, INC. AND CONTAINS CONFIDENTIAL AND TRADE SECRET INFORMATION. THIS SHEET MAY NOT BE TRANSFERRED FROM THE CUSTODY OF THE COMPETENT DIVISION OF R&D DEPARTMENT EXCEPT AS AUTHORIZED BY COMPAL ELECTRONICS, INC. NEITHER THIS SHEET NOR THE INFORMATION CONTAINS MAY BE USED BY OR DISCLOSED TO ANY THIRD PARTY WITHOUT PRIOR WRITTEN CONSENT OF COMPAL ELECTRONICS, INC.

**Compal Electronics, Inc.**

Title: SCHEMATIC, M/B LA-1591

Size: Custom | Document Number: 401235 | Rev: 2B

Date: 星期五, 五月 16, 2003 | Sheet 21 of 47

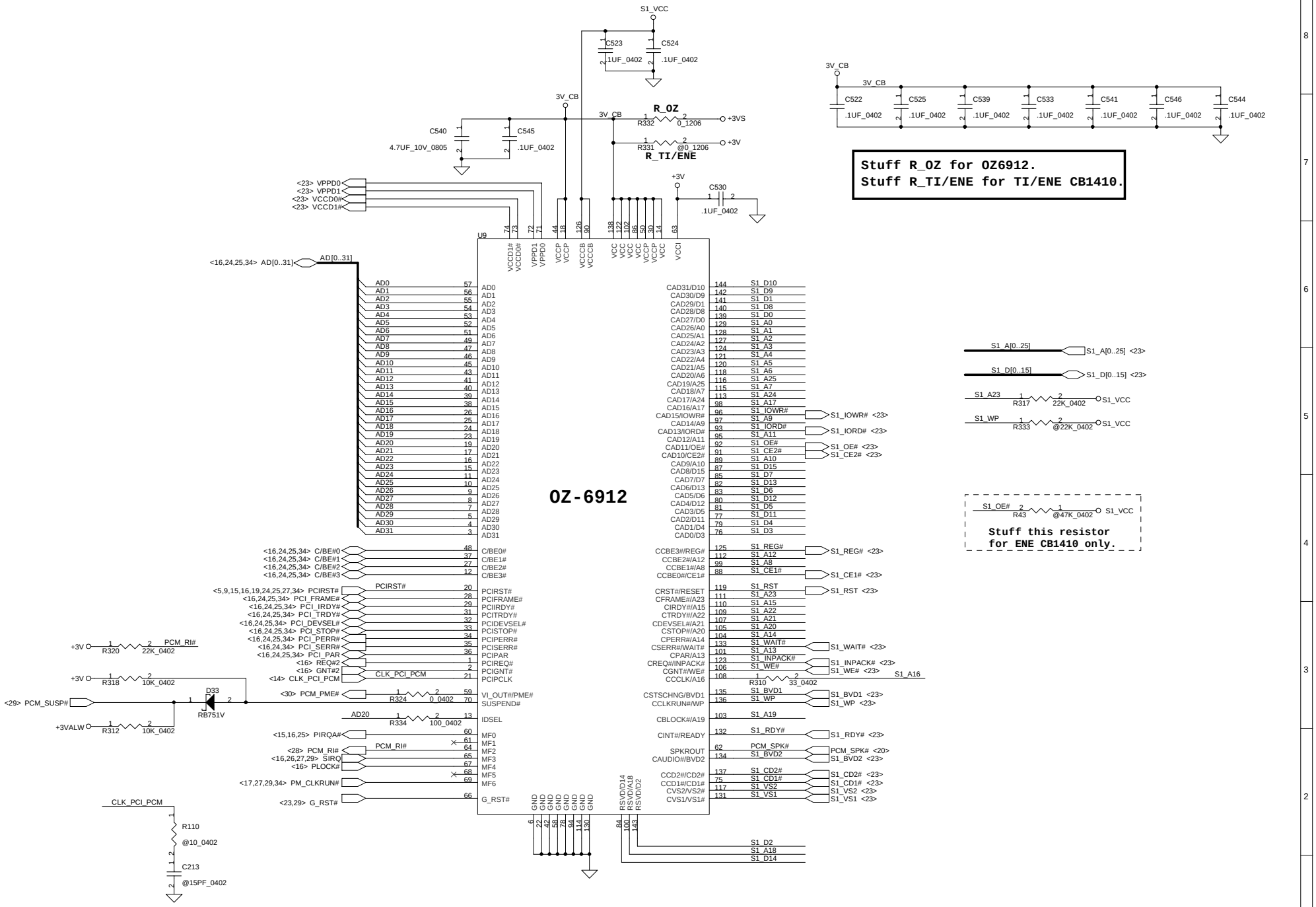


THIS SHEET OF ENGINEERING DRAWING IS THE PROPRIETARY PROPERTY OF COMPAL ELECTRONICS, INC. AND CONTAINS CONFIDENTIAL AND TRADE SECRET INFORMATION. THIS SHEET MAY NOT BE TRANSFERRED FROM THE CUSTODY OF THE COMPETENT DIVISION OF R&D DEPARTMENT EXCEPT AS AUTHORIZED BY COMPAL ELECTRONICS, INC. NEITHER THIS SHEET NOR THE INFORMATION CONTAINS MAY BE USED BY OR DISCLOSED TO ANY THIRD PARTY WITHOUT PRIOR WRITTEN CONSENT OF COMPAL ELECTRONICS, INC.

**Compal Electronics, Inc.**

Title: SCHEMATIC, M/B LA-1591

Size: Custom | Document Number: 401235 | Rev: 2B

Date: 星期五, 五月 16, 2003 | Sheet 22 of 47

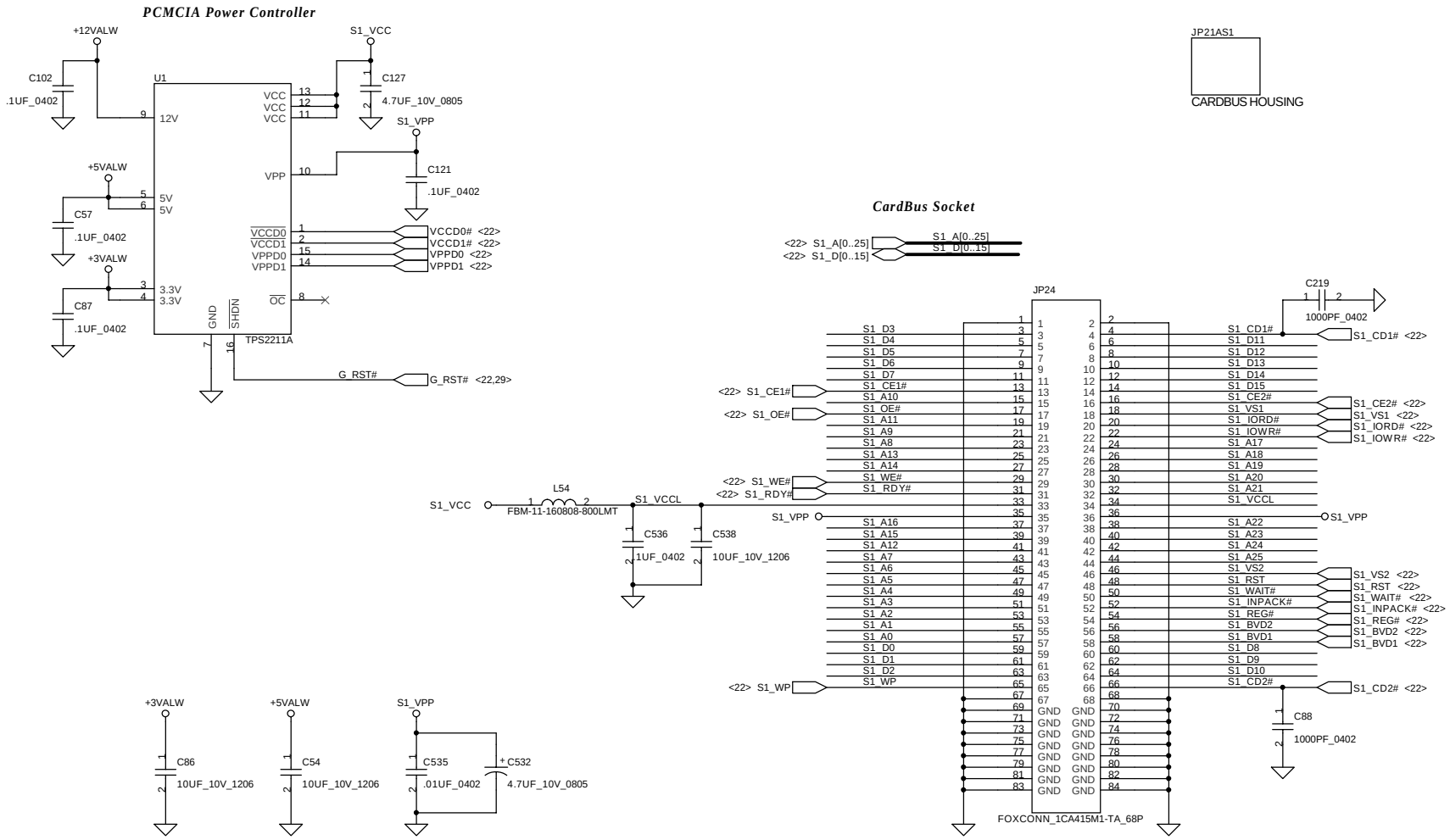


THIS SHEET OF ENGINEERING DRAWING IS THE PROPRIETARY PROPERTY OF COMPAL ELECTRONICS, INC. AND CONTAINS CONFIDENTIAL AND TRADE SECRET INFORMATION. THIS SHEET MAY NOT BE TRANSFERRED FROM THE CUSTODY OF THE COMPETENT DIVISION OF R&D DEPARTMENT EXCEPT AS AUTHORIZED BY COMPAL ELECTRONICS, INC. NEITHER THIS SHEET NOR THE INFORMATION CONTAINS MAY BE USED BY OR DISCLOSED TO ANY THIRD PARTY WITHOUT PRIOR WRITTEN CONSENT OF COMPAL ELECTRONICS, INC.

**Compal Electronics, Inc.**

Title: SCHEMATIC, M/B LA-1591

Size: Custom | Document Number: 401235 | Rev: 2B

Date: ¬P期五, 五月 16, 2003 | Sheet 23 of 47

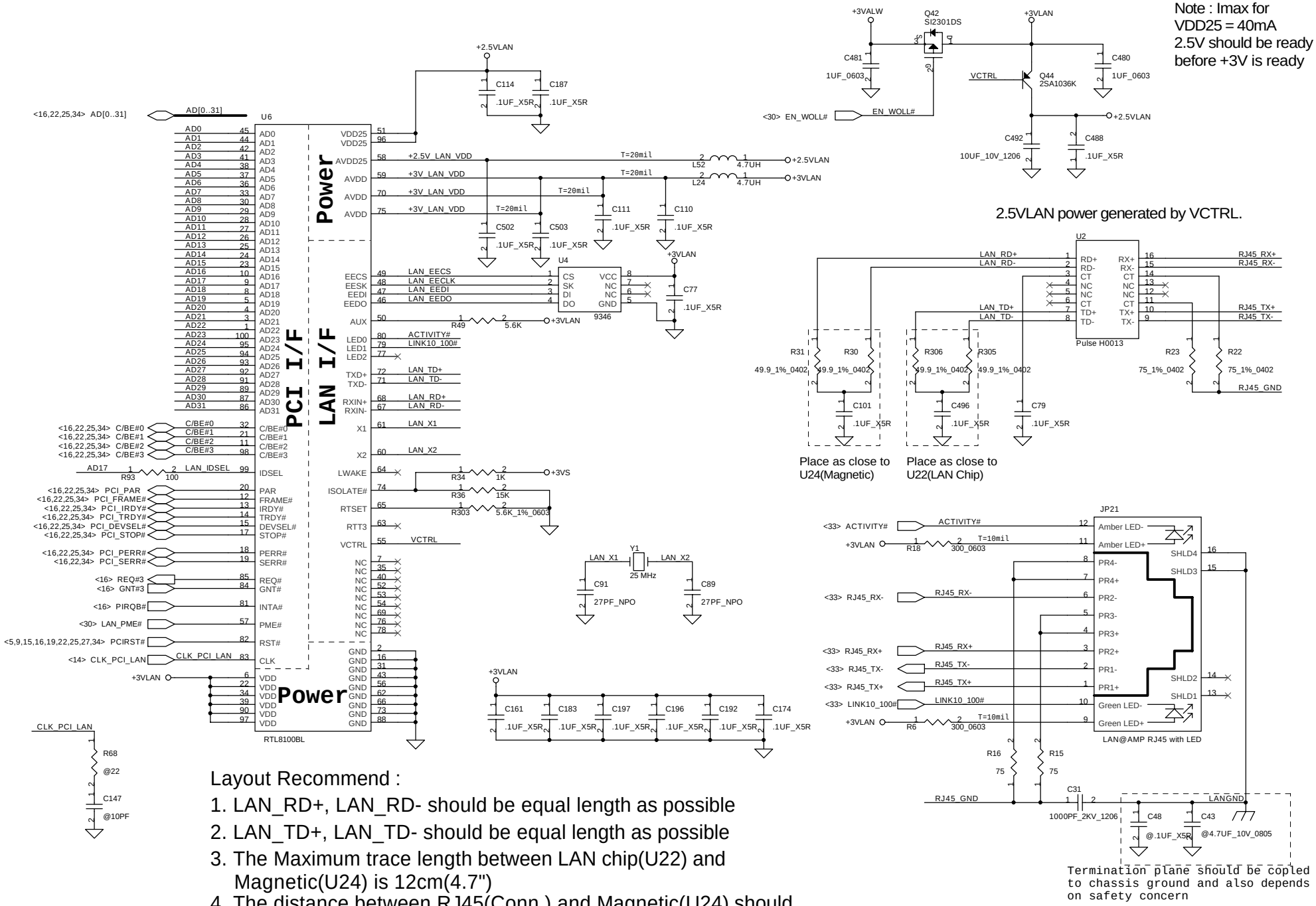


THIS SHEET OF ENGINEERING DRAWING IS THE PROPRIETARY PROPERTY OF COMPAL ELECTRONICS, INC. AND CONTAINS CONFIDENTIAL AND TRADE SECRET INFORMATION. THIS SHEET MAY NOT BE TRANSFERRED FROM THE CUSTODY OF THE COMPETENT DIVISION OF R&D DEPARTMENT EXCEPT AS AUTHORIZED BY COMPAL ELECTRONICS, INC. NEITHER THIS SHEET NOR THE INFORMATION CONTAINS MAY BE USED BY OR DISCLOSED TO ANY THIRD PARTY WITHOUT PRIOR WRITTEN CONSENT OF COMPAL ELECTRONICS, INC.

| | |
|---|---|
| Compal Electronics, Inc. | |
| Title | SCHEMATIC, M/B LA-1591 |
| Size B | Document Number 401235 |
| Rev 2B | |
| Date: ¬P期五, 五月 16, 2003 | Sheet 24 of 47 |

# IEEE1394 Controller/PHY

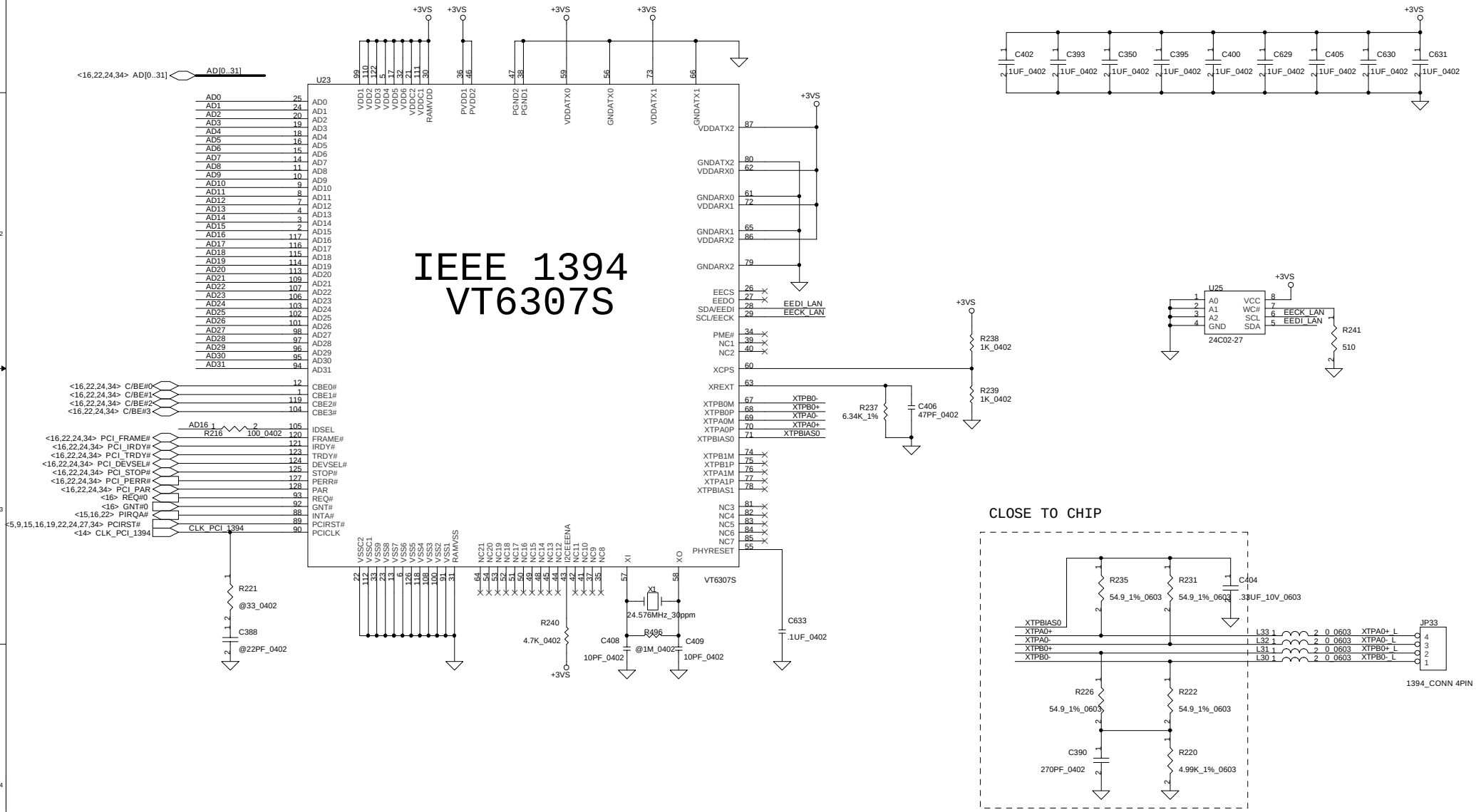


THIS SHEET OF ENGINEERING DRAWING IS THE PROPRIETARY PROPERTY OF COMPAL ELECTRONICS, INC. AND CONTAINS CONFIDENTIAL AND TRADE SECRET INFORMATION. THIS SHEET MAY NOT BE TRANSFERRED FROM THE CUSTODY OF THE COMPETENT DIVISION OF R&D DEPARTMENT EXCEPT AS AUTHORIZED BY COMPAL ELECTRONICS, INC. NEITHER THIS SHEET NOR THE INFORMATION CONTAINS MAY BE USED BY OR DISCLOSED TO ANY THIRD PARTY WITHOUT PRIOR WRITTEN CONSENT OF COMPAL ELECTRONICS, INC.

| | | |
|---|---|---|
| Compal Electronics, Inc. | | |
| Title: SCHEMATIC, M/B LA-1591 | | |
| Size | Document Number: 401235 | Rev 2B |
| Date: 星期五, 五月 16, 2003 | Sheet 25 of 47 | |

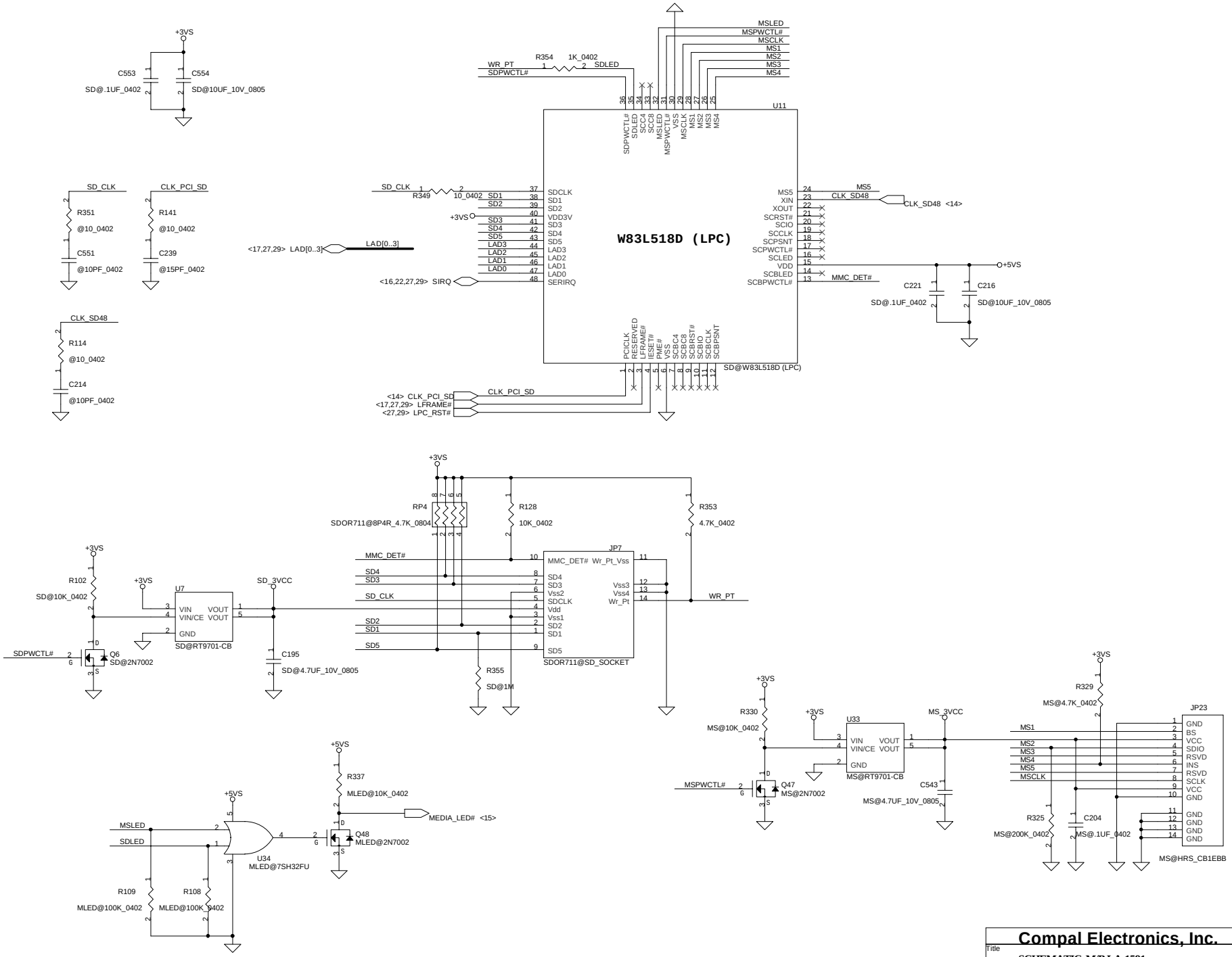


THIS SHEET OF ENGINEERING DRAWING IS THE PROPRIETARY PROPERTY OF COMPAL ELECTRONICS, INC. AND CONTAINS CONFIDENTIAL AND TRADE SECRET INFORMATION. THIS SHEET MAY NOT BE TRANSFERRED FROM THE CUSTODY OF THE COMPETENT DIVISION OF R&D DEPARTMENT EXCEPT AS AUTHORIZED BY COMPAL ELECTRONICS, INC. NEITHER THIS SHEET NOR THE INFORMATION CONTAINS MAY BE USED BY OR DISCLOSED TO ANY THIRD PARTY WITHOUT PRIOR WRITTEN CONSENT OF COMPAL ELECTRONICS, INC.

**Compal Electronics, Inc.**

Title: SCHEMATIC, M/B LA-1591

Size: Custom | Document Number: 401235 | Rev: 2B

Date: 星期五, 五月 16, 2003 | Sheet 26 of 47

# SUPER I/O SMsC FDC47N227

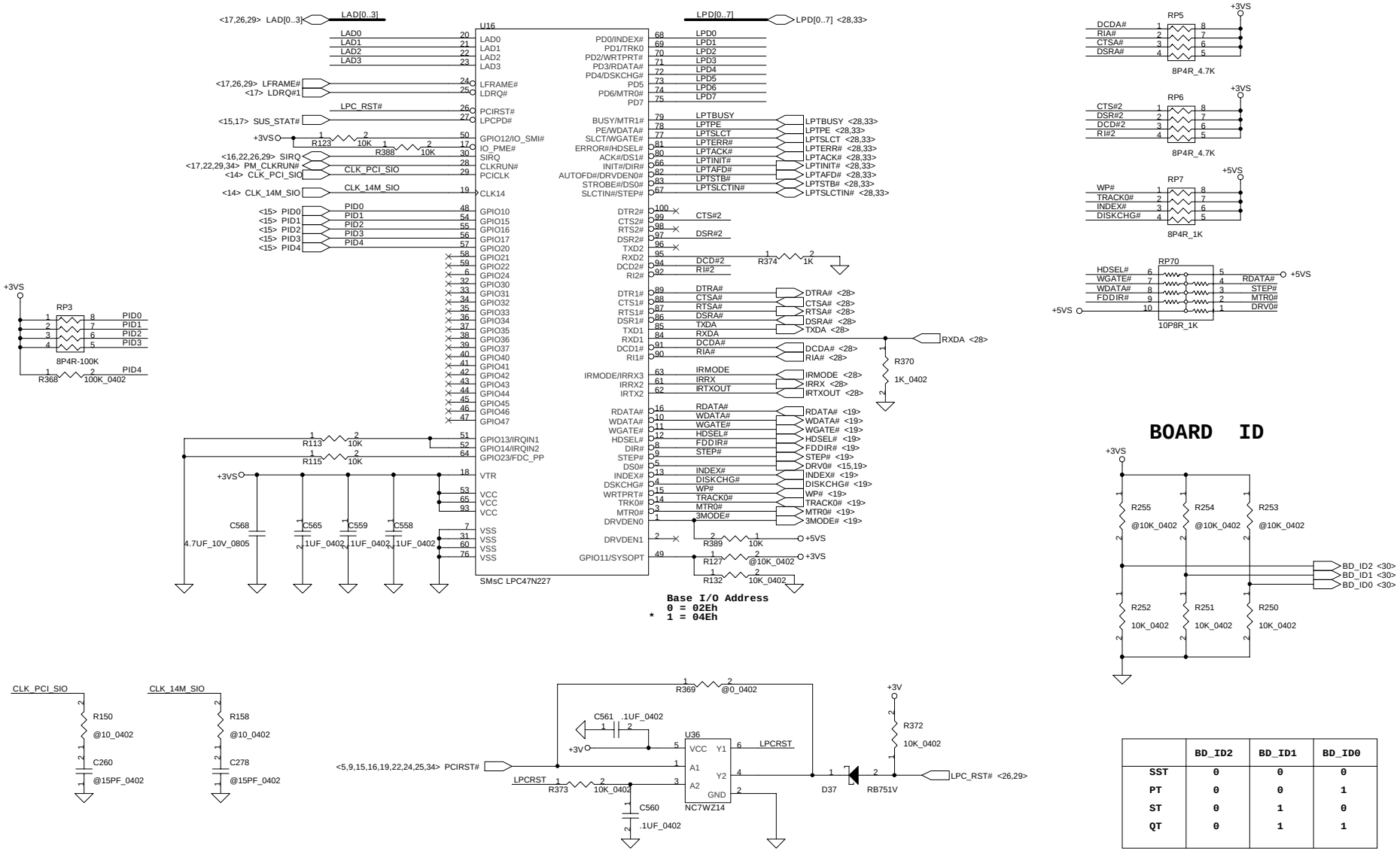


Base I/O Address
0 = 02Eh
* 1 = 04Eh

## BOARD ID







| | BD_ID2 | BD_ID1 | BD_ID0 |
|---|---|---|---|
| SST | 0 | 0 | 0 |
| PT | 0 | 0 | 1 |
| ST | 0 | 1 | 0 |
| QT | 0 | 1 | 1 |

THIS SHEET OF ENGINEERING DRAWING IS THE PROPRIETARY PROPERTY OF COMPAL ELECTRONICS, INC. AND CONTAINS CONFIDENTIAL AND TRADE SECRET INFORMATION. THIS SHEET MAY NOT BE TRANSFERRED FROM THE CUSTODY OF THE COMPETENT DIVISION OF R&D DEPARTMENT EXCEPT AS AUTHORIZED BY COMPAL ELECTRONICS, INC. NEITHER THIS SHEET NOR THE INFORMATION CONTAINS MAY BE USED BY OR DISCLOSED TO ANY THIRD PARTY WITHOUT PRIOR WRITTEN CONSENT OF COMPAL ELECTRONICS, INC.

**Compal Electronics, Inc.**

Title: SCHEMATIC, M/B LA-1591

Size: Custom | Document Number: 401235 | Rev: 2B

Date: 星期五, 五月 16, 2003 | Sheet 27 of 47

# Touch Pad & Status LED Conn.

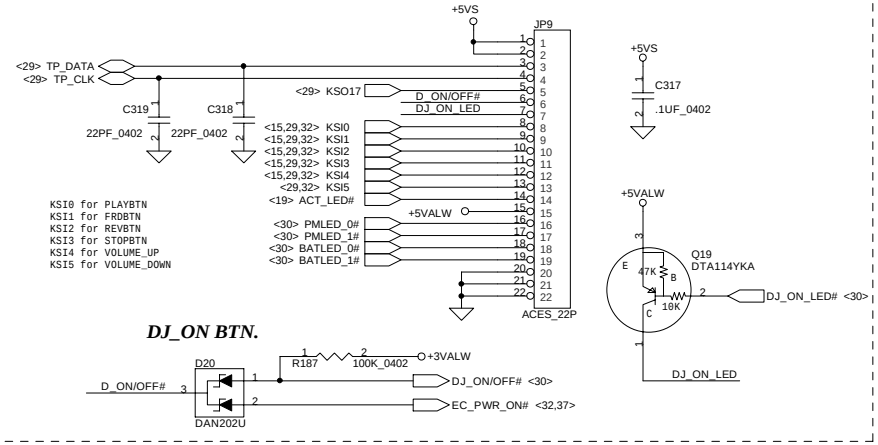


## DJ_ON BTN.




# Parallel Port

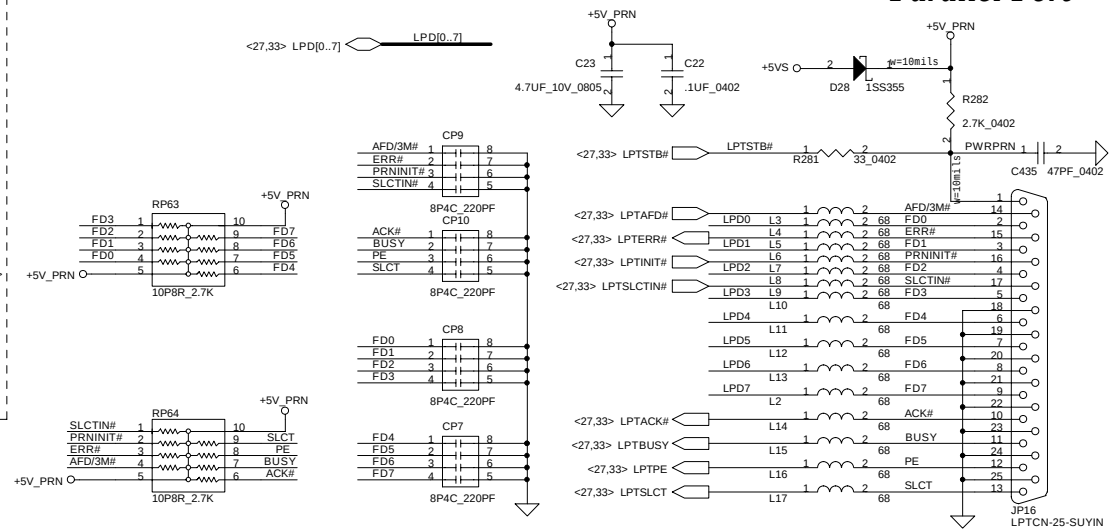


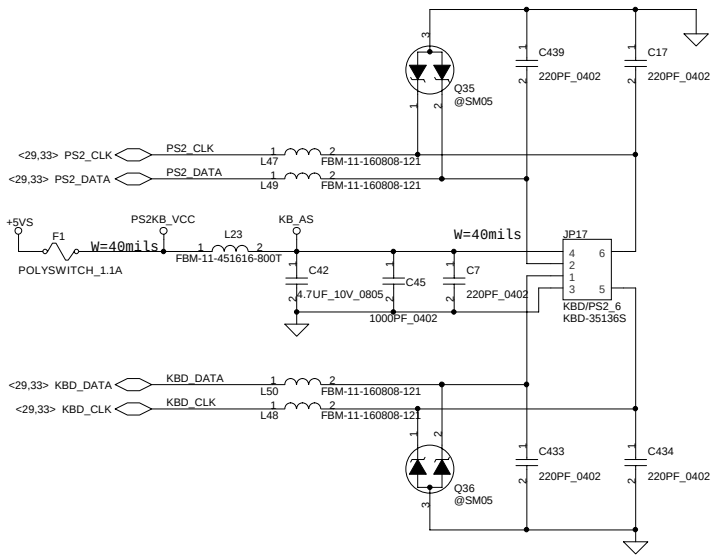


# FIR Module

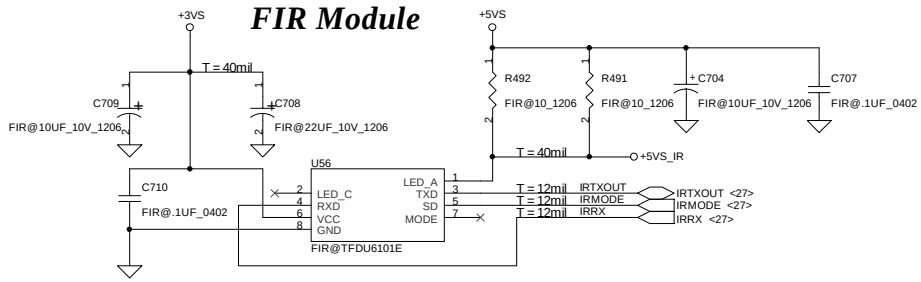


# Serial Port

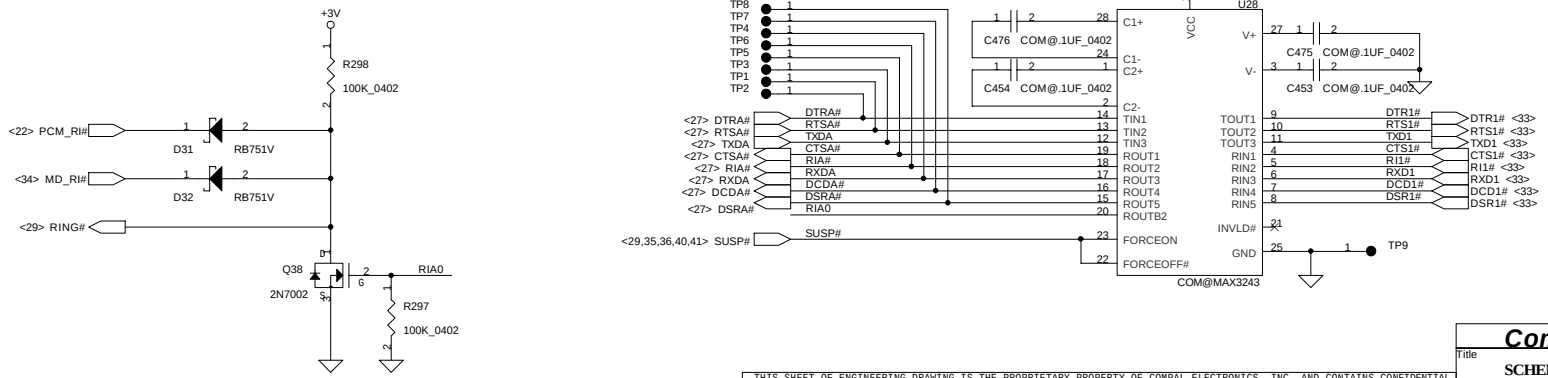





THIS SHEET OF ENGINEERING DRAWING IS THE PROPRIETARY PROPERTY OF COMPAL ELECTRONICS, INC. AND CONTAINS CONFIDENTIAL AND TRADE SECRET INFORMATION. THIS SHEET MAY NOT BE TRANSFERRED FROM THE CUSTODY OF THE COMPETENT DIVISION OF R&D DEPARTMENT EXCEPT AS AUTHORIZED BY COMPAL ELECTRONICS, INC. NEITHER THIS SHEET NOR THE INFORMATION CONTAINS MAY BE USED BY OR DISCLOSED TO ANY THIRD PARTY WITHOUT PRIOR WRITTEN CONSENT OF COMPAL ELECTRONICS, INC.

**Compal Electronics, Inc.**

Title: SCHEMATIC, M/B LA-1591

Size: Custom | Document Number: 401235 | Rev: 2B

Date: 星期五, 五月 16, 2003 | Sheet 28 of 47

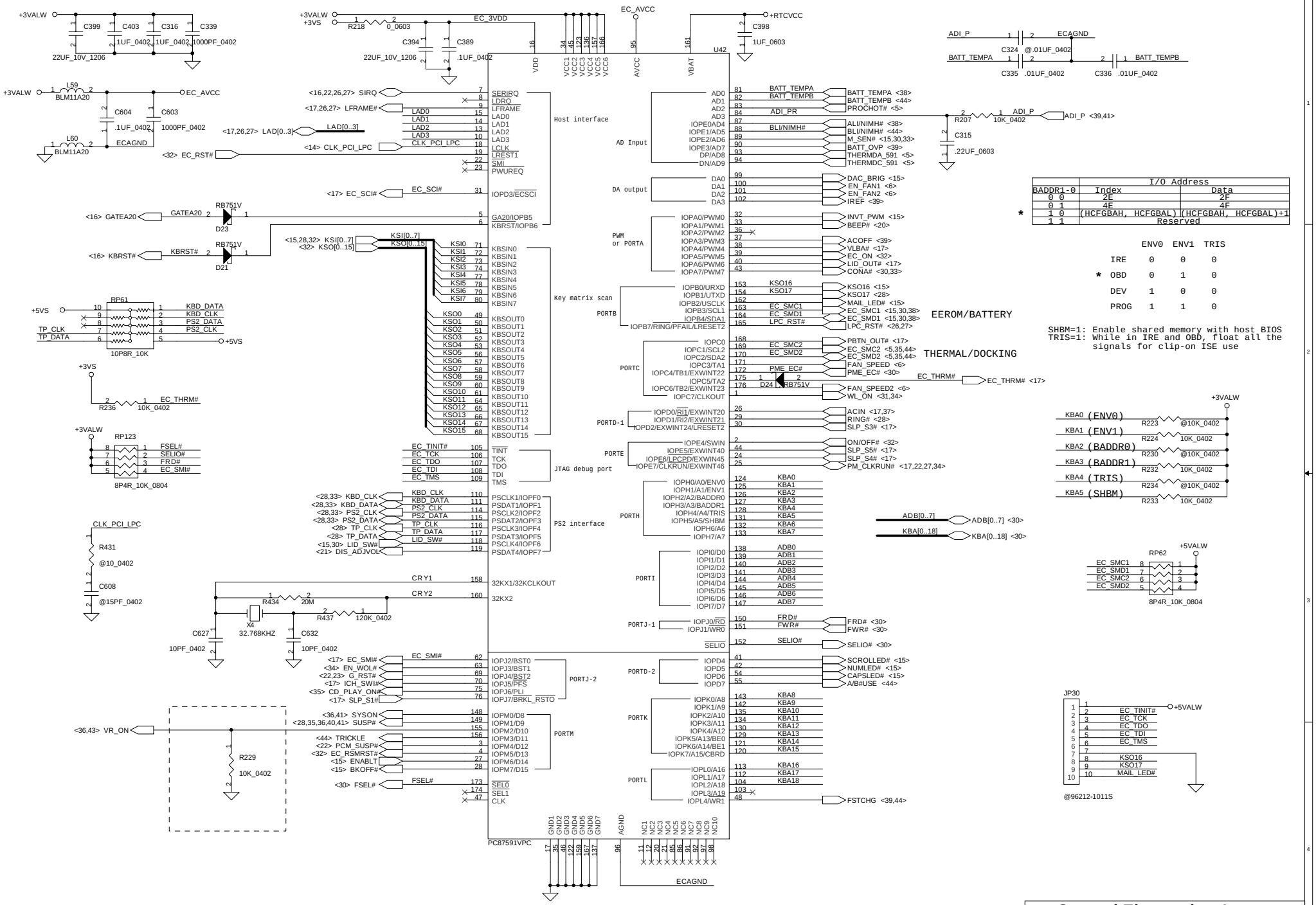


| | I/O Address | |
|---|---|---|
| BADDR1-0 | Index | Data |
| 0 0 | 2E | 2F |
| 0 1 | 4E | 4F |
| * 1 0 | (HCFGBAH, HCFGBAL) | (HCFGBAH, HCFGBAL)+1 |
| 1 1 | Reserved | |

| | ENV0 | ENV1 | TRIS |
|---|---|---|---|
| IRE | 0 | 0 | 0 |
| * OBD | 0 | 1 | 0 |
| DEV | 1 | 0 | 0 |
| PROG | 1 | 1 | 0 |

SHBM=1: Enable shared memory with host BIOS
TRIS=1: While in IRE and OBD, float all the signals for clip-on ISE use

THIS SHEET OF ENGINEERING DRAWING IS THE PROPRIETARY PROPERTY OF COMPAL ELECTRONICS, INC. AND CONTAINS CONFIDENTIAL AND TRADE SECRET INFORMATION. THIS SHEET MAY NOT BE TRANSFERRED FROM THE CUSTODY OF THE COMPETENT DIVISION OF R&D DEPARTMENT EXCEPT AS AUTHORIZED BY COMPAL ELECTRONICS, INC. NEITHER THIS SHEET NOR THE INFORMATION CONTAINS MAY BE USED BY OR DISCLOSED TO ANY THIRD PARTY WITHOUT PRIOR WRITTEN CONSENT OF COMPAL ELECTRONICS, INC.

**Compal Electronics, Inc.**

Title: SCHEMATIC, M/B LA-1591

Size: Custom | Document Number: 401235 | Rev: 2B

Date: 星期五, 五月 16, 2003 | Sheet 29 of 47

# INPUT

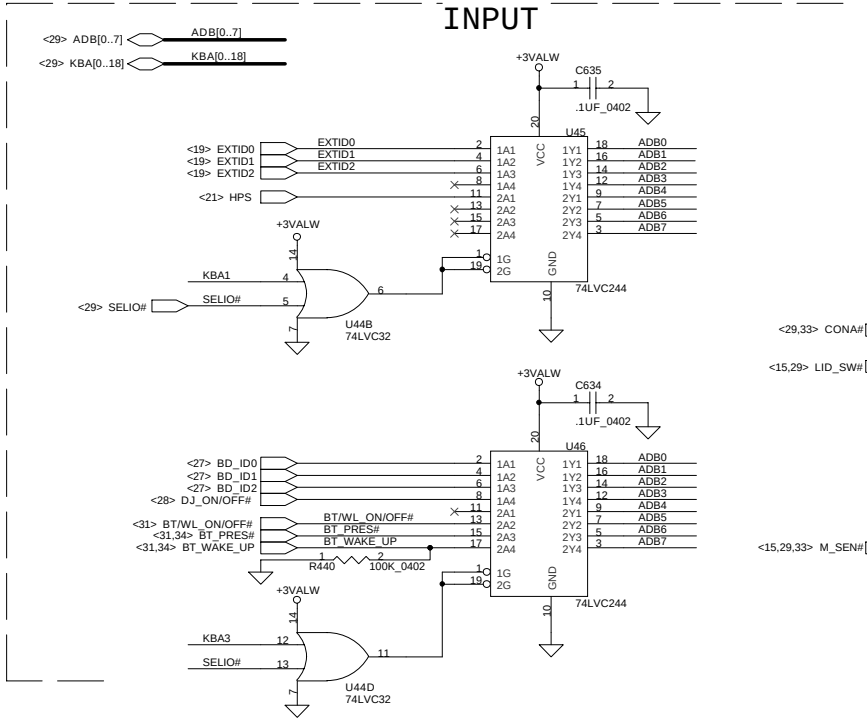


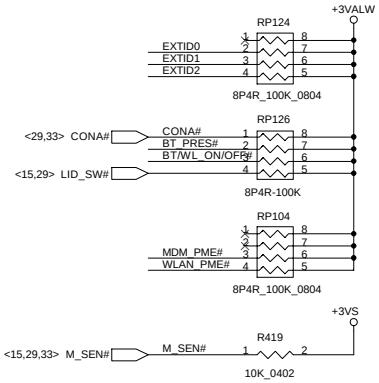


# OUTPUT

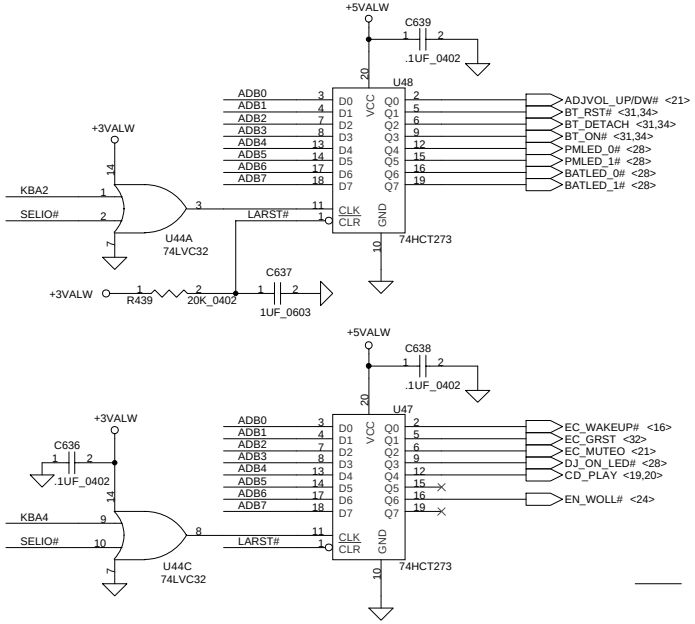


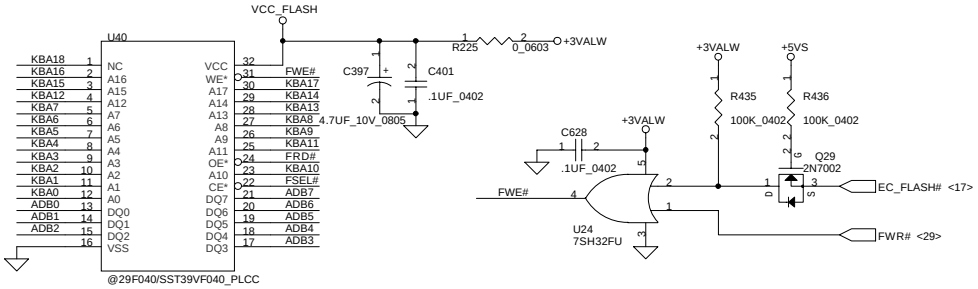


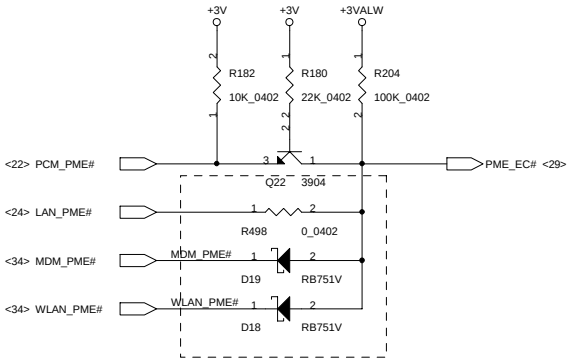


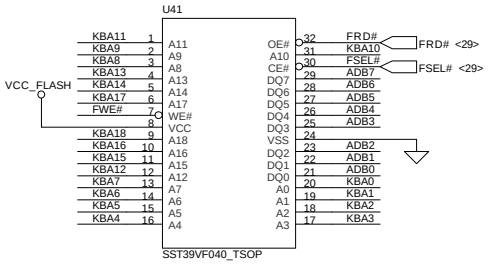


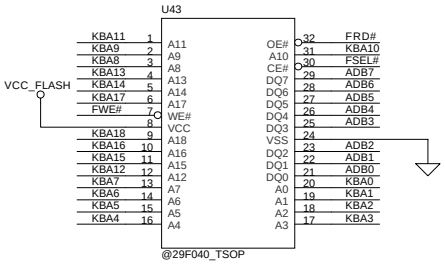


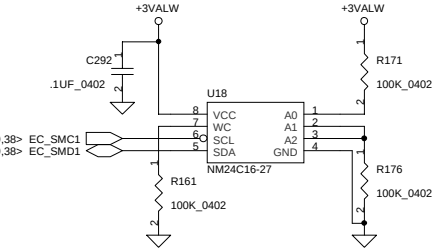


TSOP 8x14

TSOP 8x20

THIS SHEET OF ENGINEERING DRAWING IS THE PROPRIETARY PROPERTY OF COMPAL ELECTRONICS, INC. AND CONTAINS CONFIDENTIAL AND TRADE SECRET INFORMATION. THIS SHEET MAY NOT BE TRANSFERRED FROM THE CUSTODY OF THE COMPETENT DIVISION OF R&D DEPARTMENT EXCEPT AS AUTHORIZED BY COMPAL ELECTRONICS, INC. NEITHER THIS SHEET NOR THE INFORMATION CONTAINS MAY BE USED BY OR DISCLOSED TO ANY THIRD PARTY WITHOUT PRIOR WRITTEN CONSENT OF COMPAL ELECTRONICS, INC.

**Compal Electronics, Inc.**

Title: SCHEMATIC, M/B LA-1591

Size: Custom | Document Number: 401235 | Rev: 2B

Date: 星期五, 五月 16, 2003 | Sheet 30 of 47

**MDC Note**
**Pin 1 is NC for Pctel and connexant MDC modem**
**Pin 2 is NC for Pctel and connexant MDC modem**

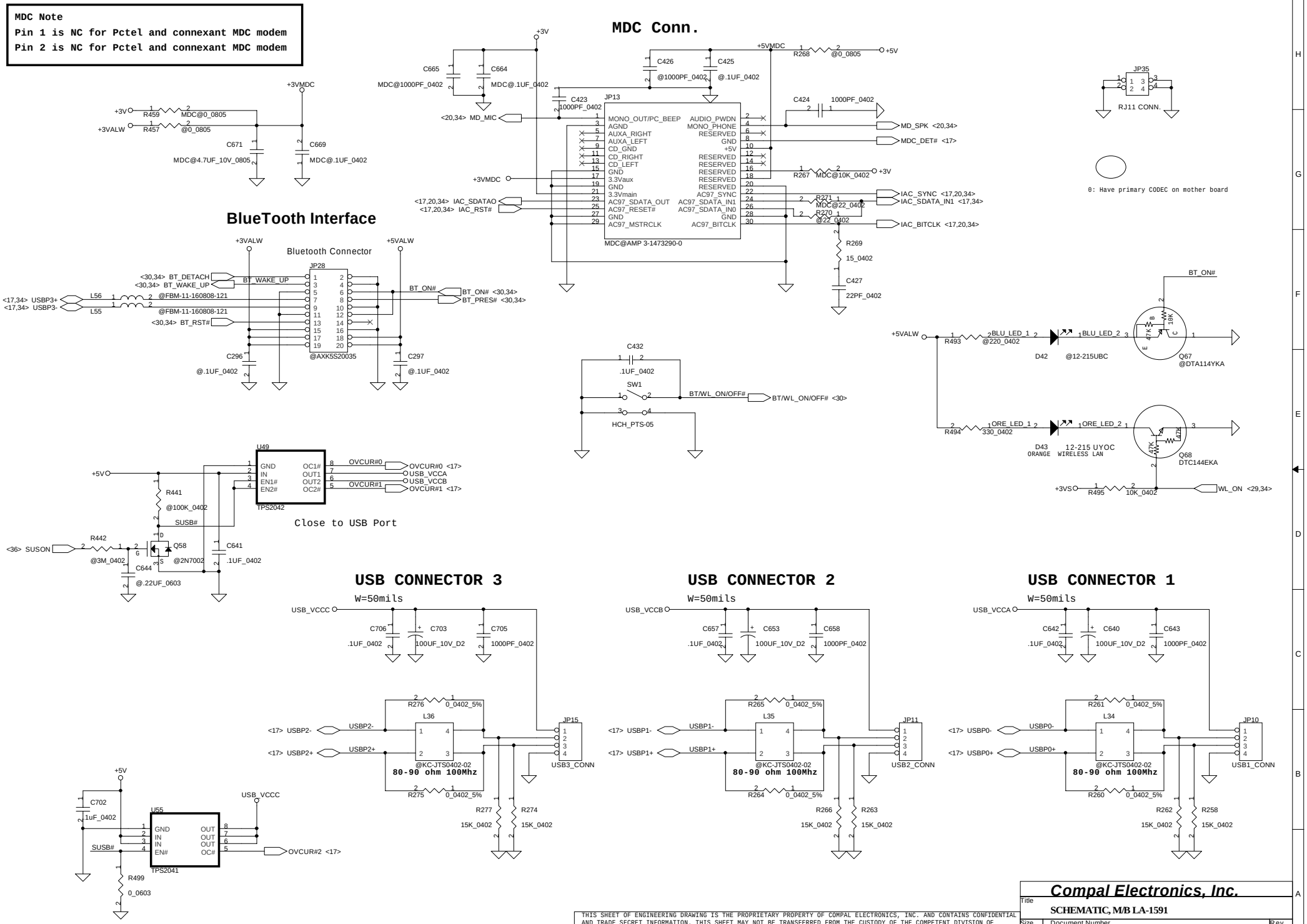


THIS SHEET OF ENGINEERING DRAWING IS THE PROPRIETARY PROPERTY OF COMPAL ELECTRONICS, INC. AND CONTAINS CONFIDENTIAL AND TRADE SECRET INFORMATION. THIS SHEET MAY NOT BE TRANSFERRED FROM THE CUSTODY OF THE COMPETENT DIVISION OF R&D DEPARTMENT EXCEPT AS AUTHORIZED BY COMPAL ELECTRONICS, INC. NEITHER THIS SHEET NOR THE INFORMATION CONTAINS MAY BE USED BY OR DISCLOSED TO ANY THIRD PARTY WITHOUT PRIOR WRITTEN CONSENT OF COMPAL ELECTRONICS, INC.

**Compal Electronics, Inc.**

Title: SCHEMATIC, M/B LA-1591

Size: Custom | Document Number: 401235 | Rev: 2B

Date: 星期五, 五月 16, 2003 | Sheet 31 of 47

## Power ON Circuit

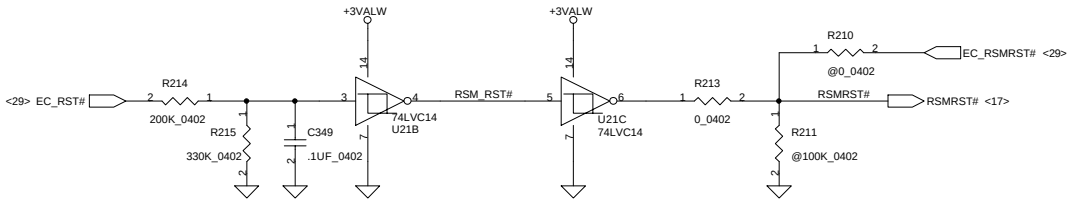


## Reset Button

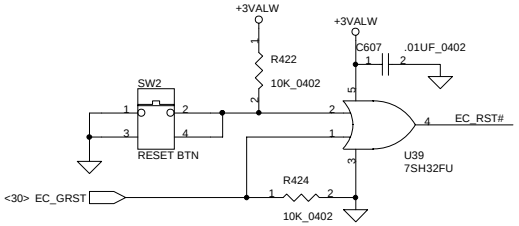


## Power BTN

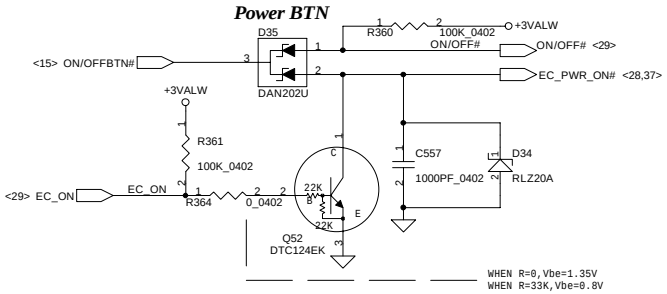


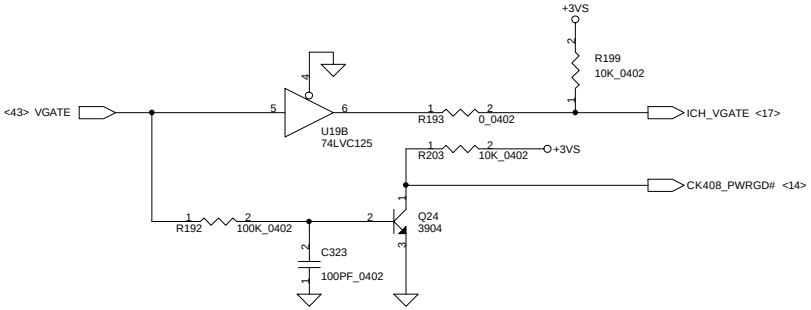


## INT_KBD CONN.

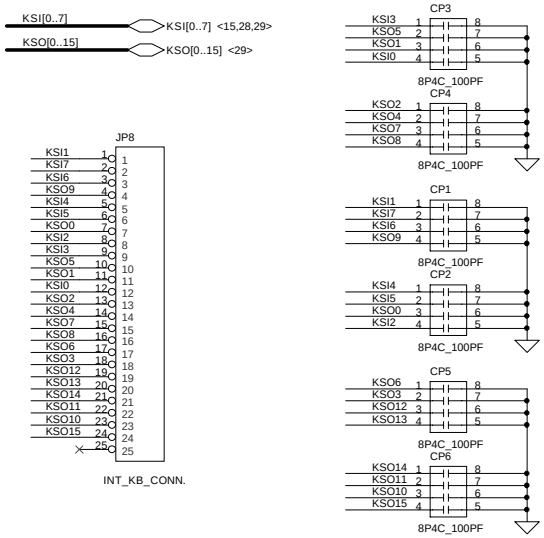


DT : INSTALL

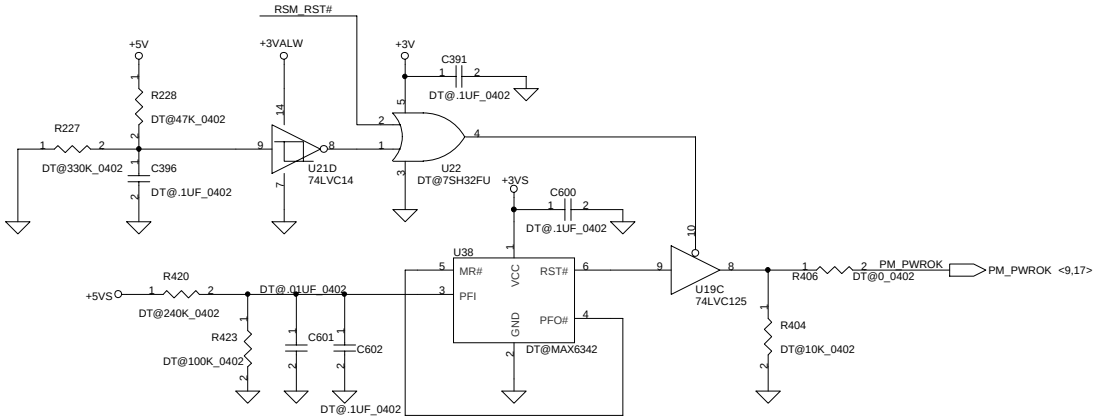


THIS SHEET OF ENGINEERING DRAWING IS THE PROPRIETARY PROPERTY OF COMPAL ELECTRONICS, INC. AND CONTAINS CONFIDENTIAL AND TRADE SECRET INFORMATION. THIS SHEET MAY NOT BE TRANSFERRED FROM THE CUSTODY OF THE COMPETENT DIVISION OF R&D DEPARTMENT EXCEPT AS AUTHORIZED BY COMPAL ELECTRONICS, INC. NEITHER THIS SHEET NOR THE INFORMATION CONTAINS MAY BE USED BY OR DISCLOSED TO ANY THIRD PARTY WITHOUT PRIOR WRITTEN CONSENT OF COMPAL ELECTRONICS, INC.

**Compal Electronics, Inc.**

Title: SCHEMATIC, M/B LA-1591

Size: Custom | Document Number: 401235 | Rev: 2B

Date: 星期五, 五月 16, 2003 | Sheet 32 of 47

# DOCKING 204 PIN

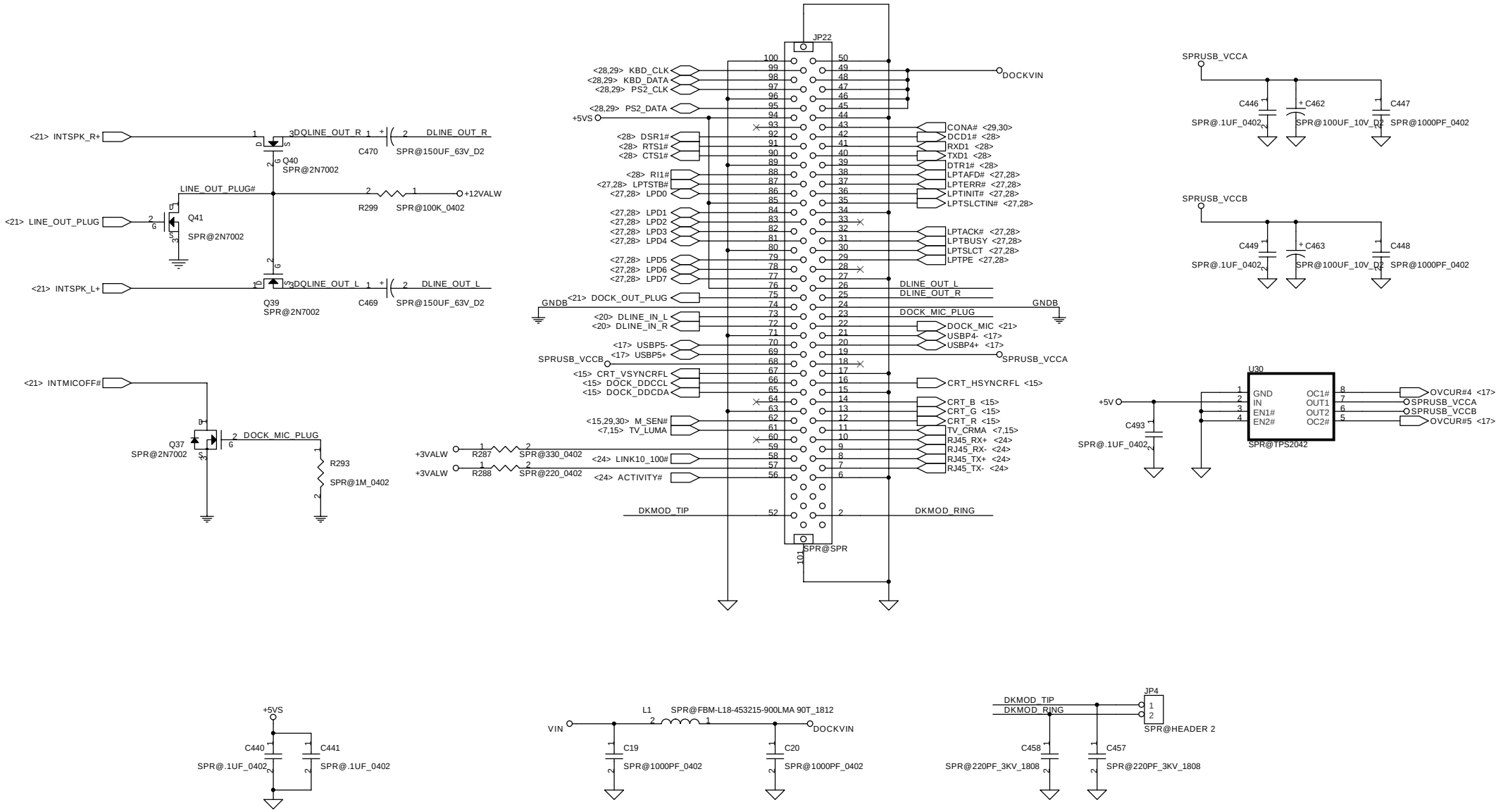


THIS SHEET OF ENGINEERING DRAWING IS THE PROPRIETARY PROPERTY OF COMPAL ELECTRONICS, INC. AND CONTAINS CONFIDENTIAL AND TRADE SECRET INFORMATION. THIS SHEET MAY NOT BE TRANSFERRED FROM THE CUSTODY OF THE COMPETENT DIVISION OF R&D DEPARTMENT EXCEPT AS AUTHORIZED BY COMPAL ELECTRONICS, INC. NEITHER THIS SHEET NOR THE INFORMATION CONTAINS MAY BE USED BY OR DISCLOSED TO ANY THIRD PARTY WITHOUT PRIOR WRITTEN CONSENT OF COMPAL ELECTRONICS, INC.

**Compal Electronics, Inc.**

Title: SCHEMATIC, M/B LA-1591

Size: Custom | Document Number: 401235 | Rev: 2B

Date: ¬P期五, 五月 16, 2003 | Sheet 33 of 47

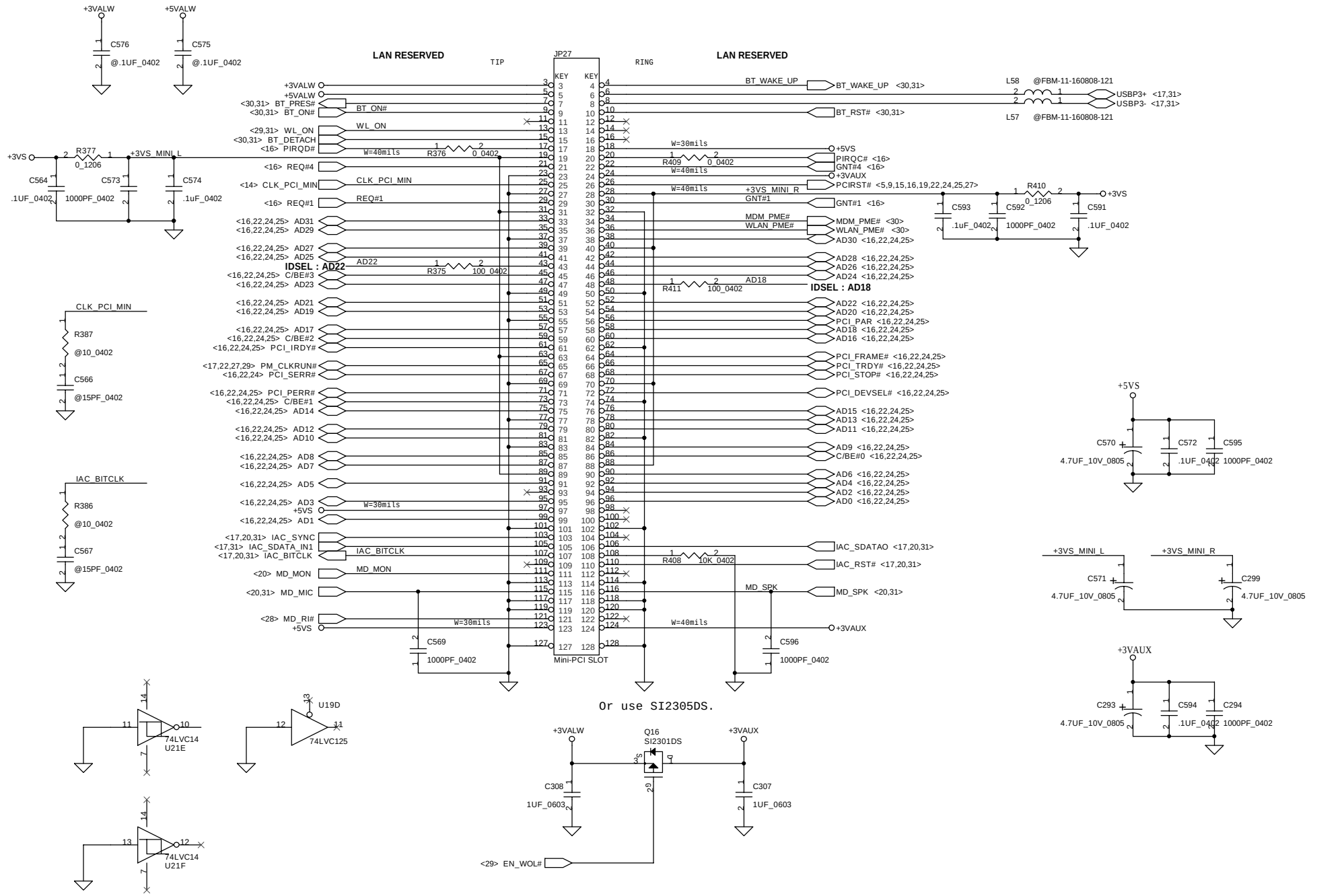


THIS SHEET OF ENGINEERING DRAWING IS THE PROPRIETARY PROPERTY OF COMPAL ELECTRONICS, INC. AND CONTAINS CONFIDENTIAL AND TRADE SECRET INFORMATION. THIS SHEET MAY NOT BE TRANSFERRED FROM THE CUSTODY OF THE COMPETENT DIVISION OF R&D DEPARTMENT EXCEPT AS AUTHORIZED BY COMPAL ELECTRONICS, INC. NEITHER THIS SHEET NOR THE INFORMATION CONTAINS MAY BE USED BY OR DISCLOSED TO ANY THIRD PARTY WITHOUT PRIOR WRITTEN CONSENT OF COMPAL ELECTRONICS, INC.

**Compal Electronics, Inc.**

Title: SCHEMATIC, M/B LA-1591

Size: Custom | Document Number: 401235 | Rev: 2B

Date: ¬P期五, 五月 16, 2003 | Sheet 34 of 47

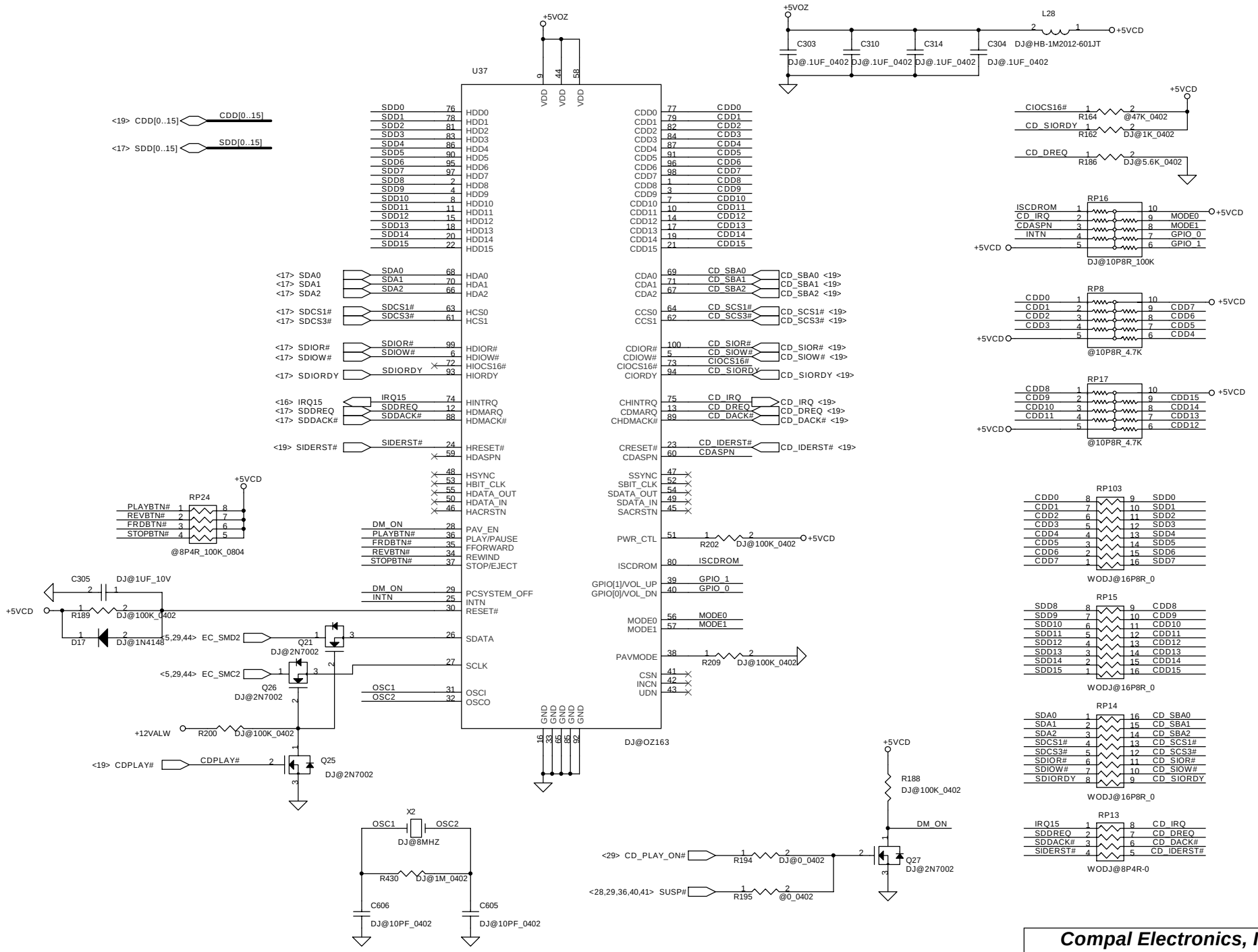


THIS SHEET OF ENGINEERING DRAWING IS THE PROPRIETARY PROPERTY OF COMPAL ELECTRONICS, INC. AND CONTAINS CONFIDENTIAL AND TRADE SECRET INFORMATION. THIS SHEET MAY NOT BE TRANSFERRED FROM THE CUSTODY OF THE COMPETENT DIVISION OF R&D DEPARTMENT EXCEPT AS AUTHORIZED BY COMPAL ELECTRONICS, INC. NEITHER THIS SHEET NOR THE INFORMATION CONTAINS MAY BE USED BY OR DISCLOSED TO ANY THIRD PARTY WITHOUT PRIOR WRITTEN CONSENT OF COMPAL ELECTRONICS, INC.

**Compal Electronics, Inc.**

Title: SCHEMATIC, M/B LA-1591

| Size | Document Number | Rev |
|---|---|---|
| B | 401235 | 2B |

Date: ¬P期五, 五月 16, 2003 Sheet 35 of 47

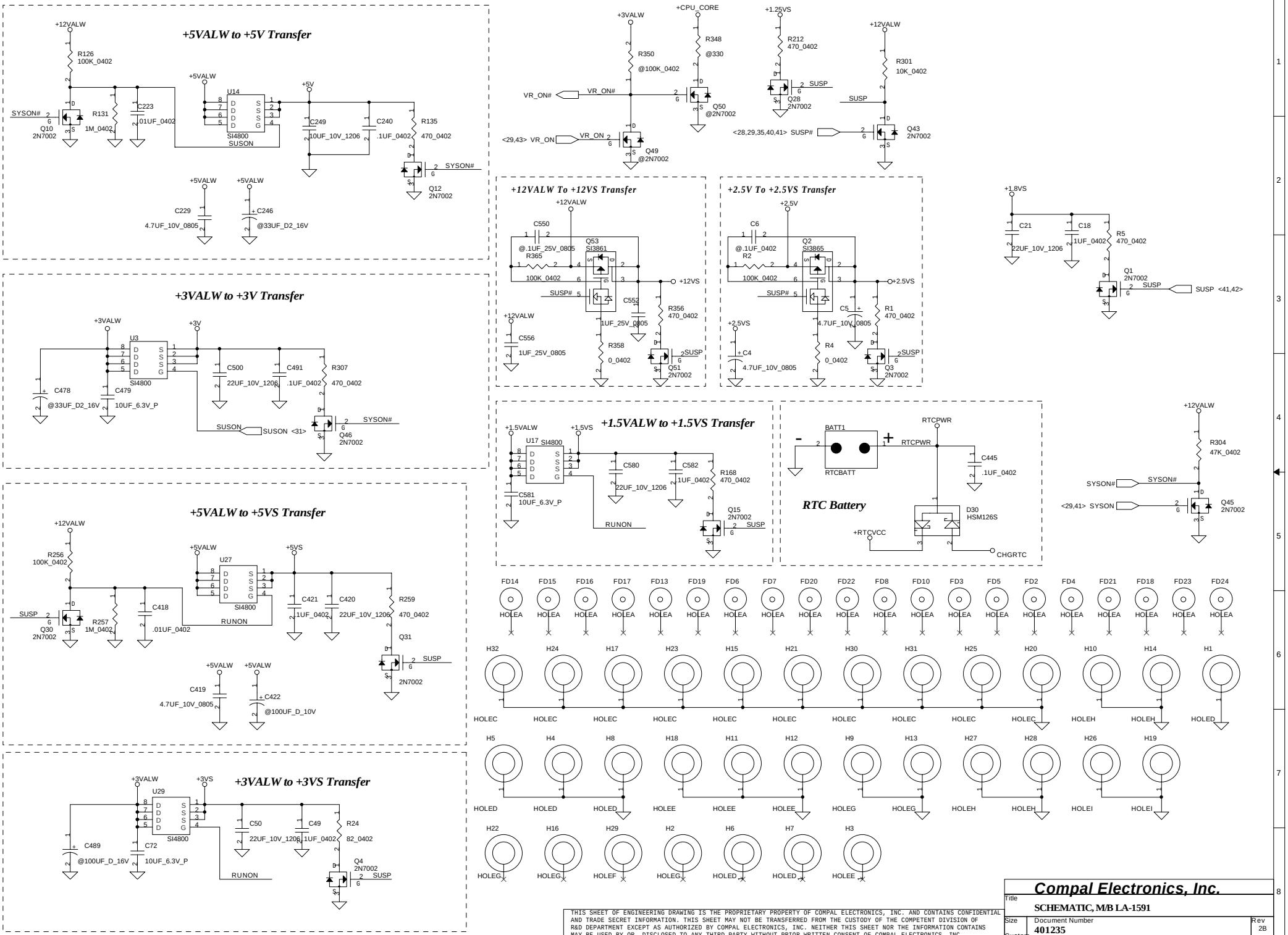


THIS SHEET OF ENGINEERING DRAWING IS THE PROPRIETARY PROPERTY OF COMPAL ELECTRONICS, INC. AND CONTAINS CONFIDENTIAL AND TRADE SECRET INFORMATION. THIS SHEET MAY NOT BE TRANSFERRED FROM THE CUSTODY OF THE COMPETENT DIVISION OF R&D DEPARTMENT EXCEPT AS AUTHORIZED BY COMPAL ELECTRONICS, INC. NEITHER THIS SHEET NOR THE INFORMATION CONTAINS MAY BE USED BY OR DISCLOSED TO ANY THIRD PARTY WITHOUT PRIOR WRITTEN CONSENT OF COMPAL ELECTRONICS, INC.

**Compal Electronics, Inc.**

Title: SCHEMATIC, M/B LA-1591

Size: Custom | Document Number: 401235 | Rev: 2B

Date: 星期五, 五月 16, 2003 | Sheet 36 of 47

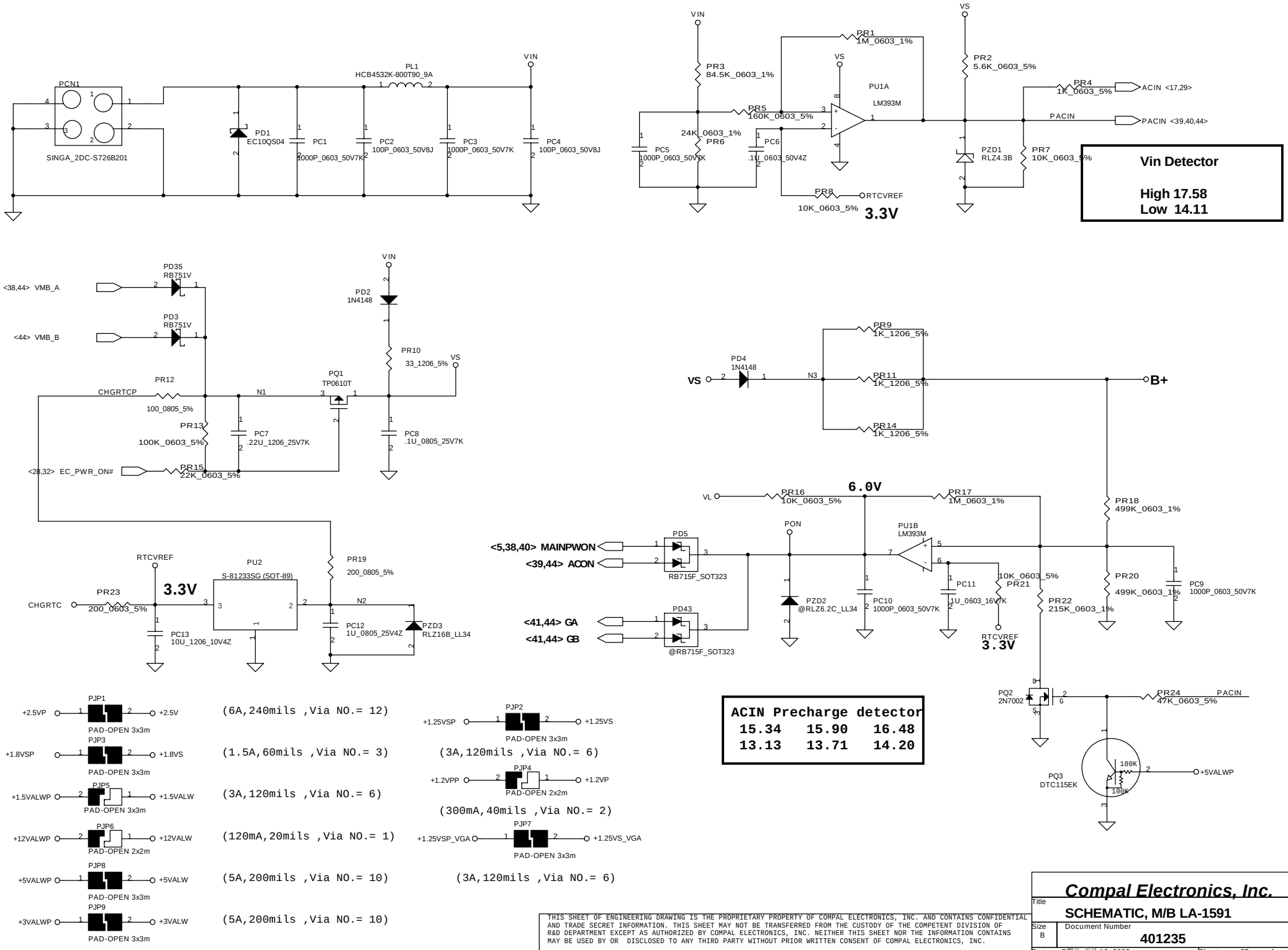


THIS SHEET OF ENGINEERING DRAWING IS THE PROPRIETARY PROPERTY OF COMPAL ELECTRONICS, INC. AND CONTAINS CONFIDENTIAL AND TRADE SECRET INFORMATION. THIS SHEET MAY NOT BE TRANSFERRED FROM THE CUSTODY OF THE COMPETENT DIVISION OF R&D DEPARTMENT EXCEPT AS AUTHORIZED BY COMPAL ELECTRONICS, INC. NEITHER THIS SHEET NOR THE INFORMATION CONTAINS MAY BE USED BY OR DISCLOSED TO ANY THIRD PARTY WITHOUT PRIOR WRITTEN CONSENT OF COMPAL ELECTRONICS, INC.

**Compal Electronics, Inc.**

Title: SCHEMATIC, M/B LA-1591

Size: B | Document Number: 401235 | Rev: 2B

Date: ¬P期五, 五月 16, 2003 | Sheet 37 of 47

**PH1 under CPU botten side :**
CPU thermal protection at 84 degree C
Recovery at 45 degree C

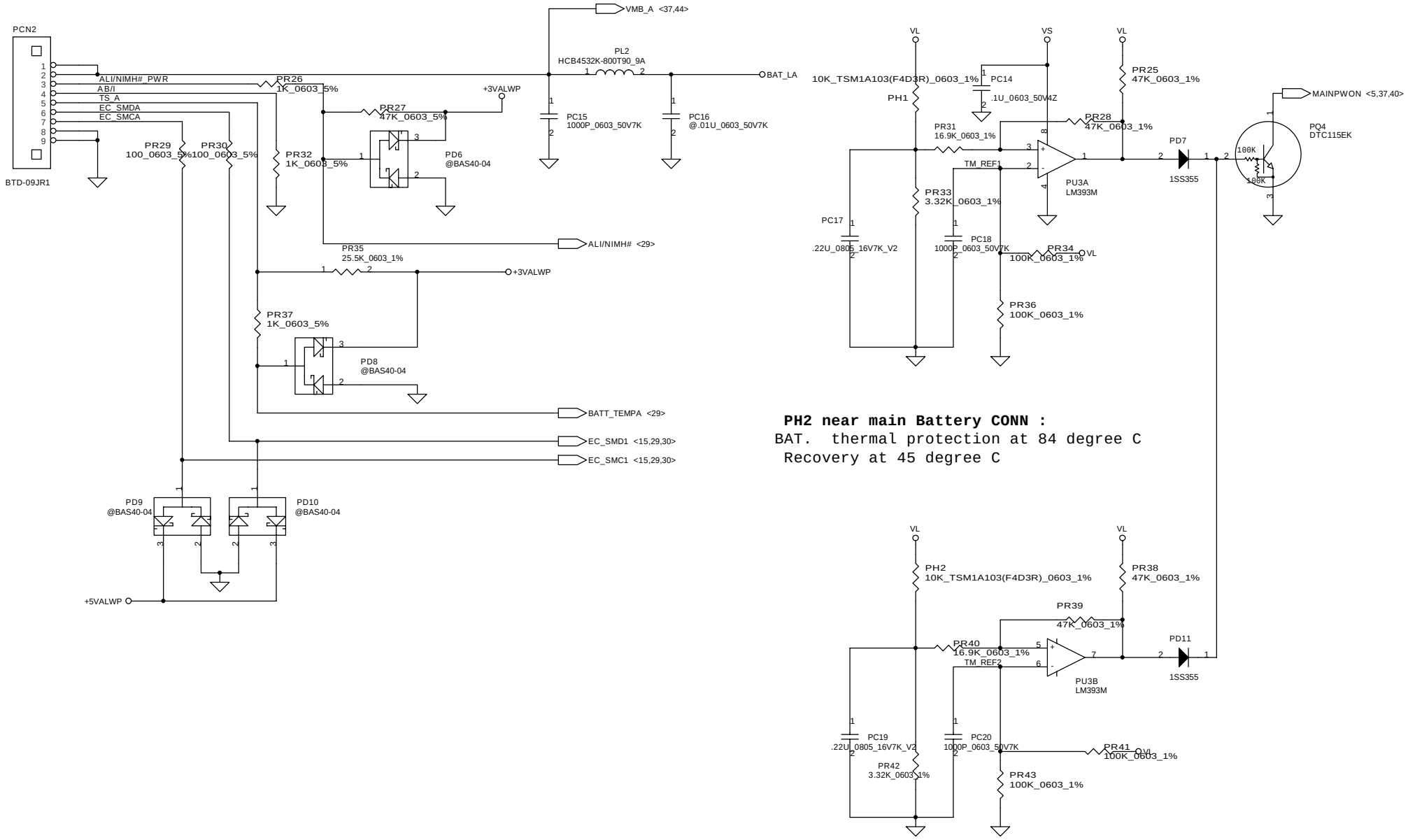


**PH2 near main Battery CONN :**
BAT. thermal protection at 84 degree C
Recovery at 45 degree C

THIS SHEET OF ENGINEERING DRAWING IS THE PROPRIETARY PROPERTY OF COMPAL ELECTRONICS, INC. AND CONTAINS CONFIDENTIAL AND TRADE SECRET INFORMATION. THIS SHEET MAY NOT BE TRANSFERRED FROM THE CUSTODY OF THE COMPETENT DIVISION OF R&D DEPARTMENT EXCEPT AS AUTHORIZED BY COMPAL ELECTRONICS, INC. NEITHER THIS SHEET NOR THE INFORMATION CONTAINS MAY BE USED BY OR DISCLOSED TO ANY THIRD PARTY WITHOUT PRIOR WRITTEN CONSENT OF COMPAL ELECTRONICS, INC.

**Compal Electronics, Inc.**

Title: **SCHEMATIC, M/B LA-1591**

Size: B | Document Number: **401235** | Rev: **2B**

Date: ¬P期五, 五月 16, 2003 | Sheet 38 of 47

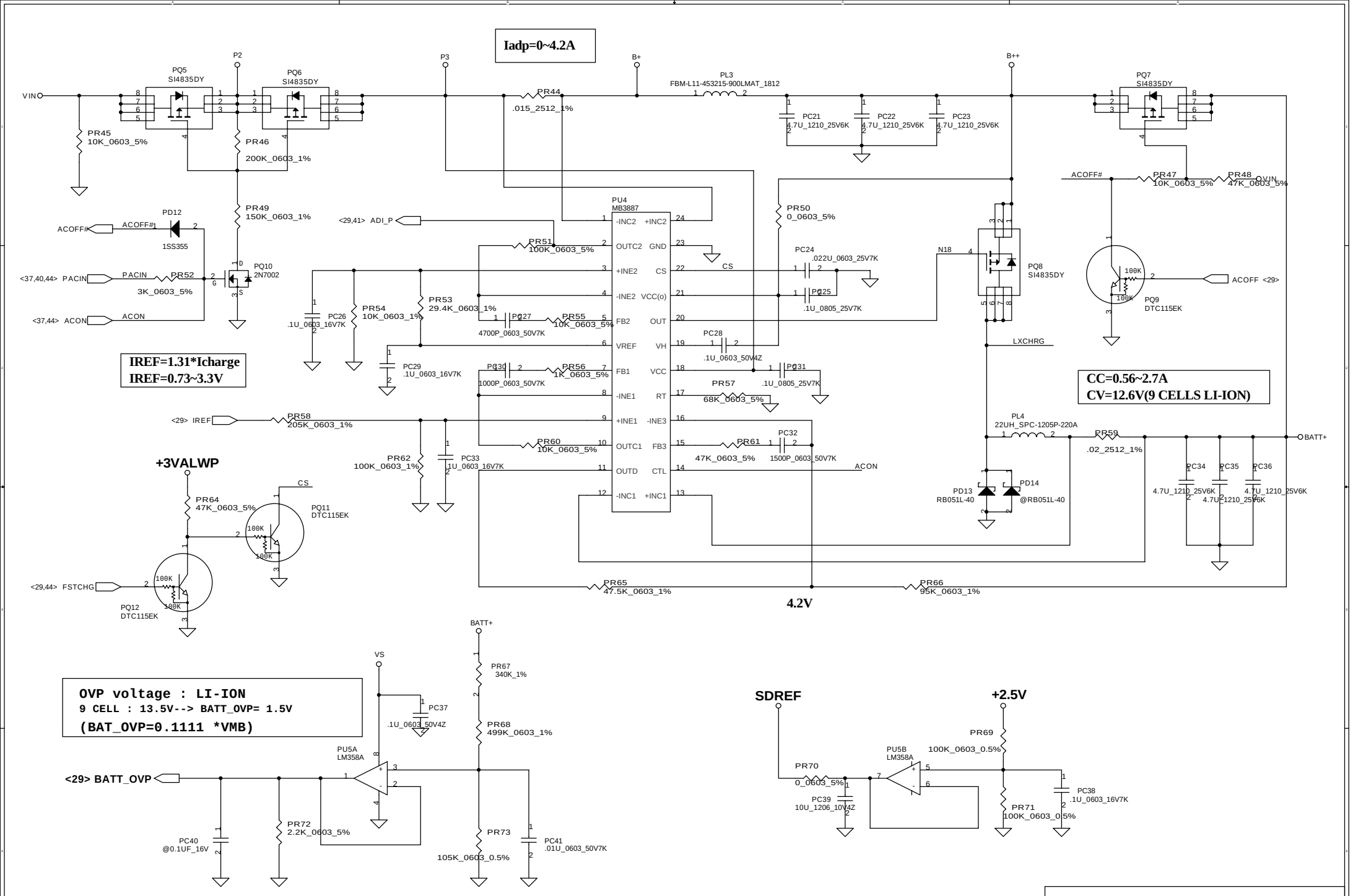


THIS SHEET OF ENGINEERING DRAWING IS THE PROPRIETARY PROPERTY OF COMPAL ELECTRONICS, INC. AND CONTAINS CONFIDENTIAL AND TRADE SECRET INFORMATION. THIS SHEET MAY NOT BE TRANSFERRED FROM THE CUSTODY OF THE COMPETENT DIVISION OF R&D DEPARTMENT EXCEPT AS AUTHORIZED BY COMPAL ELECTRONICS, INC. NEITHER THIS SHEET NOR THE INFORMATION CONTAINS MAY BE USED BY OR DISCLOSED TO ANY THIRD PARTY WITHOUT PRIOR WRITTEN CONSENT OF COMPAL ELECTRONICS, INC.

| | |
|---|---|
| Compal Electronics, Inc. | |
| Title | SCHEMATIC, M/B LA-1591 |
| Size B | Document Number 401235 |
| Rev | 2B |
| Date: ¬P期五, 五月 16, 2003 | Sheet 39 of 47 |

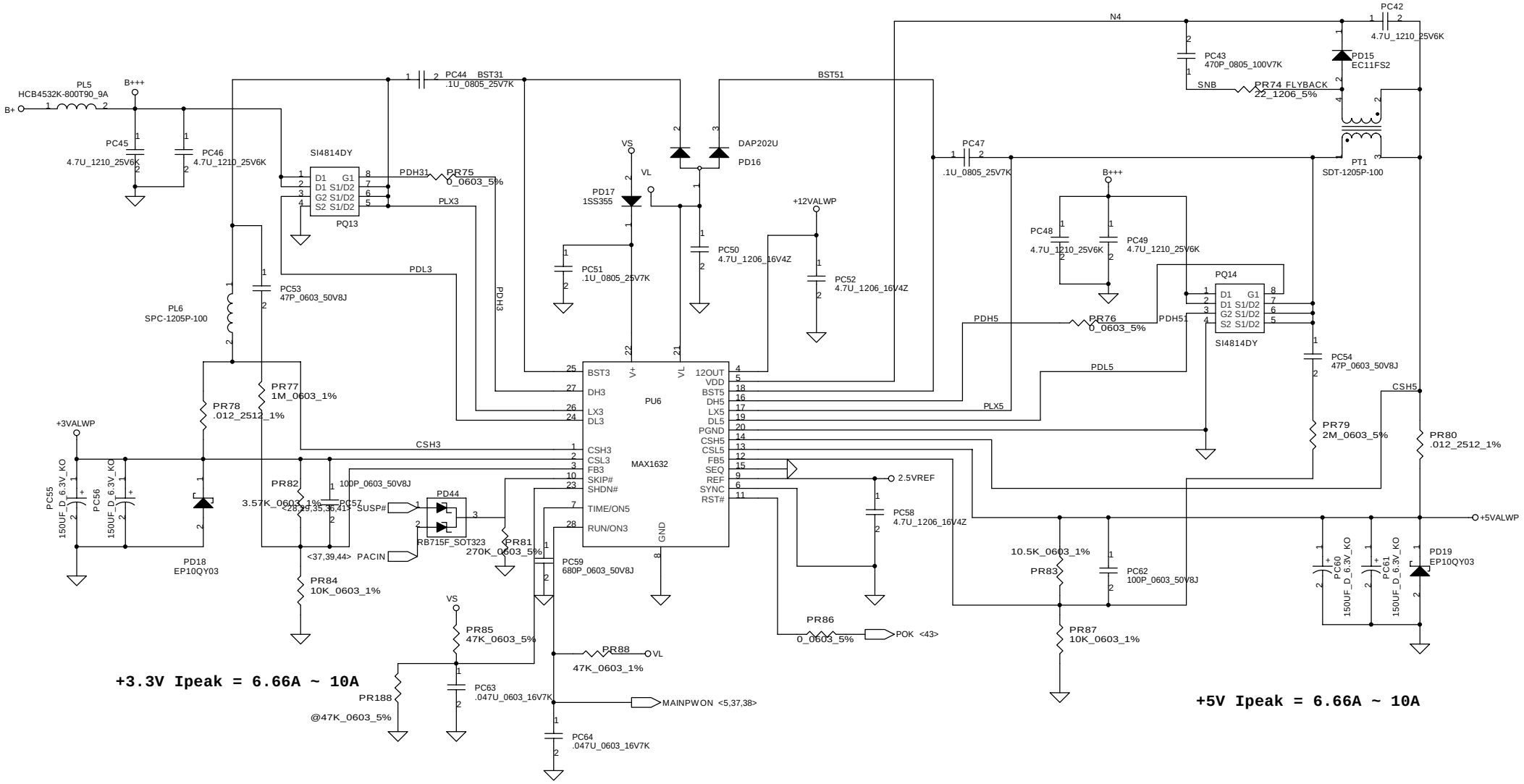


THIS SHEET OF ENGINEERING DRAWING IS THE PROPRIETARY PROPERTY OF COMPAL ELECTRONICS, INC. AND CONTAINS CONFIDENTIAL AND TRADE SECRET INFORMATION. THIS SHEET MAY NOT BE TRANSFERRED FROM THE CUSTODY OF THE COMPETENT DIVISION OF R&D DEPARTMENT EXCEPT AS AUTHORIZED BY COMPAL ELECTRONICS, INC. NEITHER THIS SHEET NOR THE INFORMATION CONTAINS MAY BE USED BY OR DISCLOSED TO ANY THIRD PARTY WITHOUT PRIOR WRITTEN CONSENT OF COMPAL ELECTRONICS, INC.

**Compal Electronics, Inc.**

Title: **SCHEMATIC, M/B LA-1591**

Size: B | Document Number: **401235** | Rev: **2B**

Date: ¬P期五, 五月 16, 2003 | Sheet 40 of 47

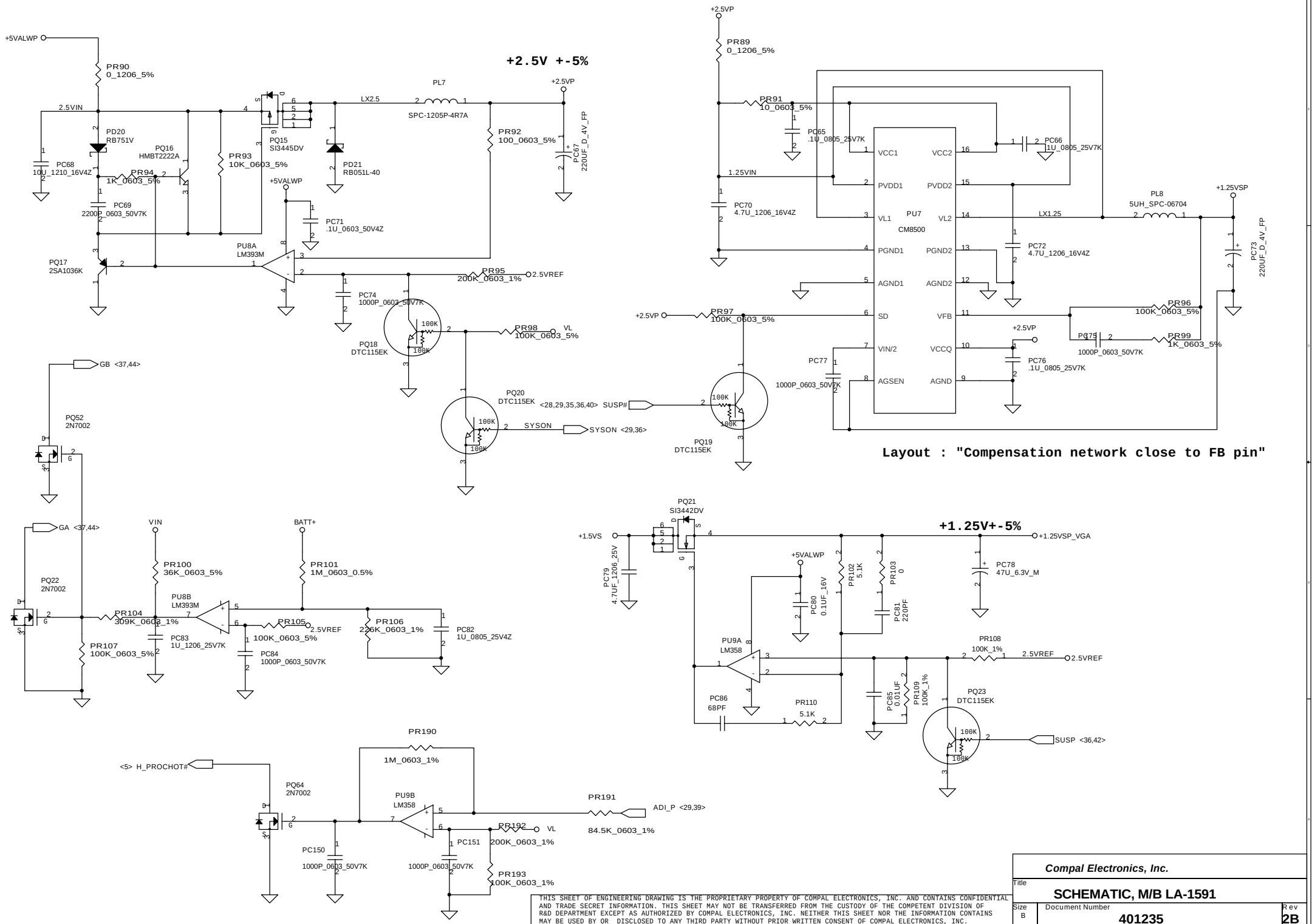


THIS SHEET OF ENGINEERING DRAWING IS THE PROPRIETARY PROPERTY OF COMPAL ELECTRONICS, INC. AND CONTAINS CONFIDENTIAL AND TRADE SECRET INFORMATION. THIS SHEET MAY NOT BE TRANSFERRED FROM THE CUSTODY OF THE COMPETENT DIVISION OF R&D DEPARTMENT EXCEPT AS AUTHORIZED BY COMPAL ELECTRONICS, INC. NEITHER THIS SHEET NOR THE INFORMATION CONTAINS MAY BE USED BY OR DISCLOSED TO ANY THIRD PARTY WITHOUT PRIOR WRITTEN CONSENT OF COMPAL ELECTRONICS, INC.

| | |
|---|---|
| Compal Electronics, Inc. | |
| Title | SCHEMATIC, M/B LA-1591 |
| Size B | Document Number 401235 |
| Rev | 2B |
| Date: ¬P期五, 五月 16, 2003 | Sheet 41 of 47 |

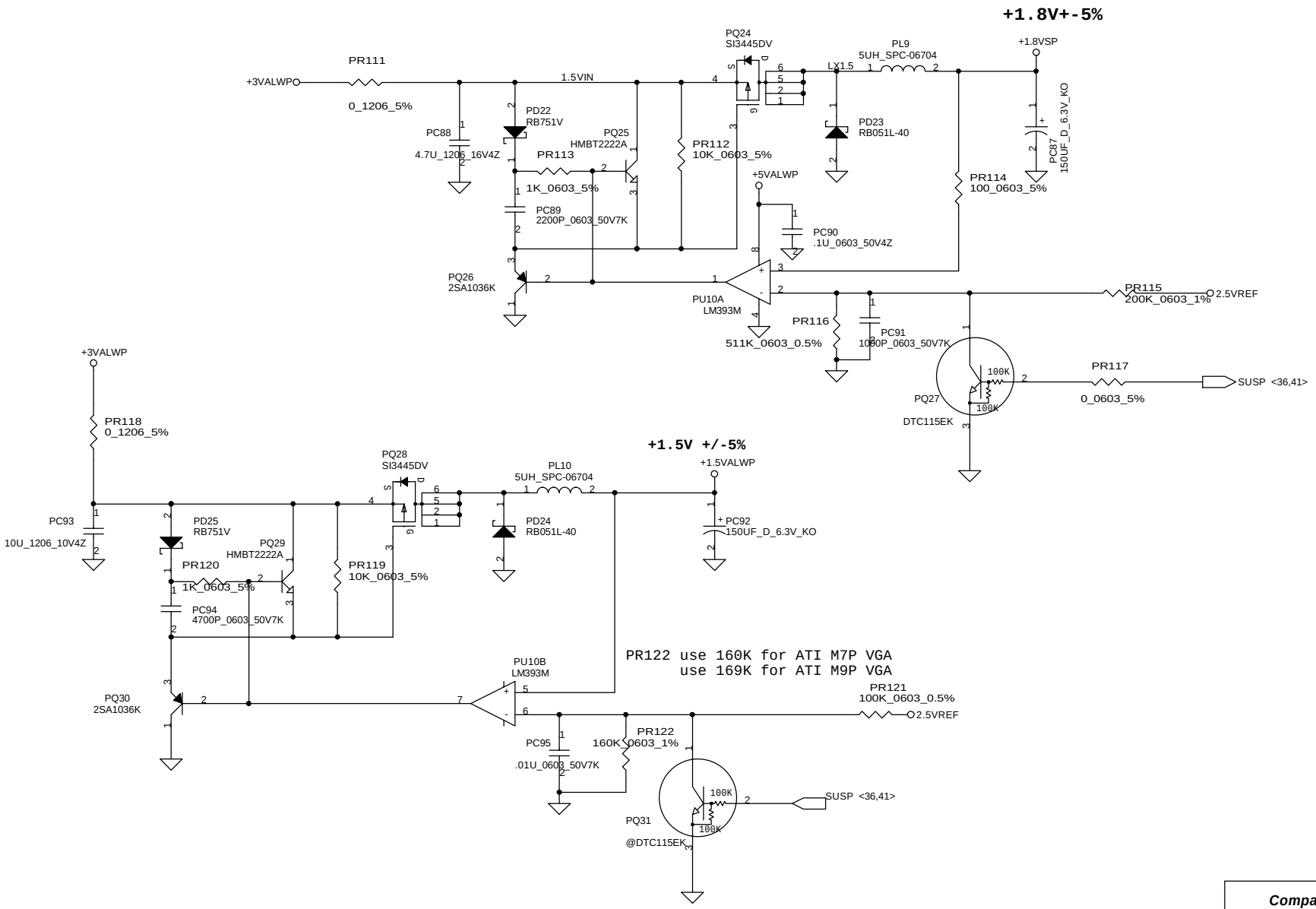


THIS SHEET OF ENGINEERING DRAWING IS THE PROPRIETARY PROPERTY OF COMPAL ELECTRONICS, INC. AND CONTAINS CONFIDENTIAL AND TRADE SECRET INFORMATION. THIS SHEET MAY NOT BE TRANSFERRED FROM THE CUSTODY OF THE COMPETENT DIVISION OF R&D DEPARTMENT EXCEPT AS AUTHORIZED BY COMPAL ELECTRONICS, INC. NEITHER THIS SHEET NOR THE INFORMATION CONTAINS MAY BE USED BY OR DISCLOSED TO ANY THIRD PARTY WITHOUT PRIOR WRITTEN CONSENT OF COMPAL ELECTRONICS, INC.

| | | |
|---|---|---|
| *Compal Electronics, Inc.* | | |
| Title: **SCHEMATIC, M/B LA-1591** | | |
| Size: B | Document Number: **401235** | Rev: **2B** |
| Date: 星期五, 五月 16, 2003 | Sheet 42 of 47 | |

# CPU-CORE

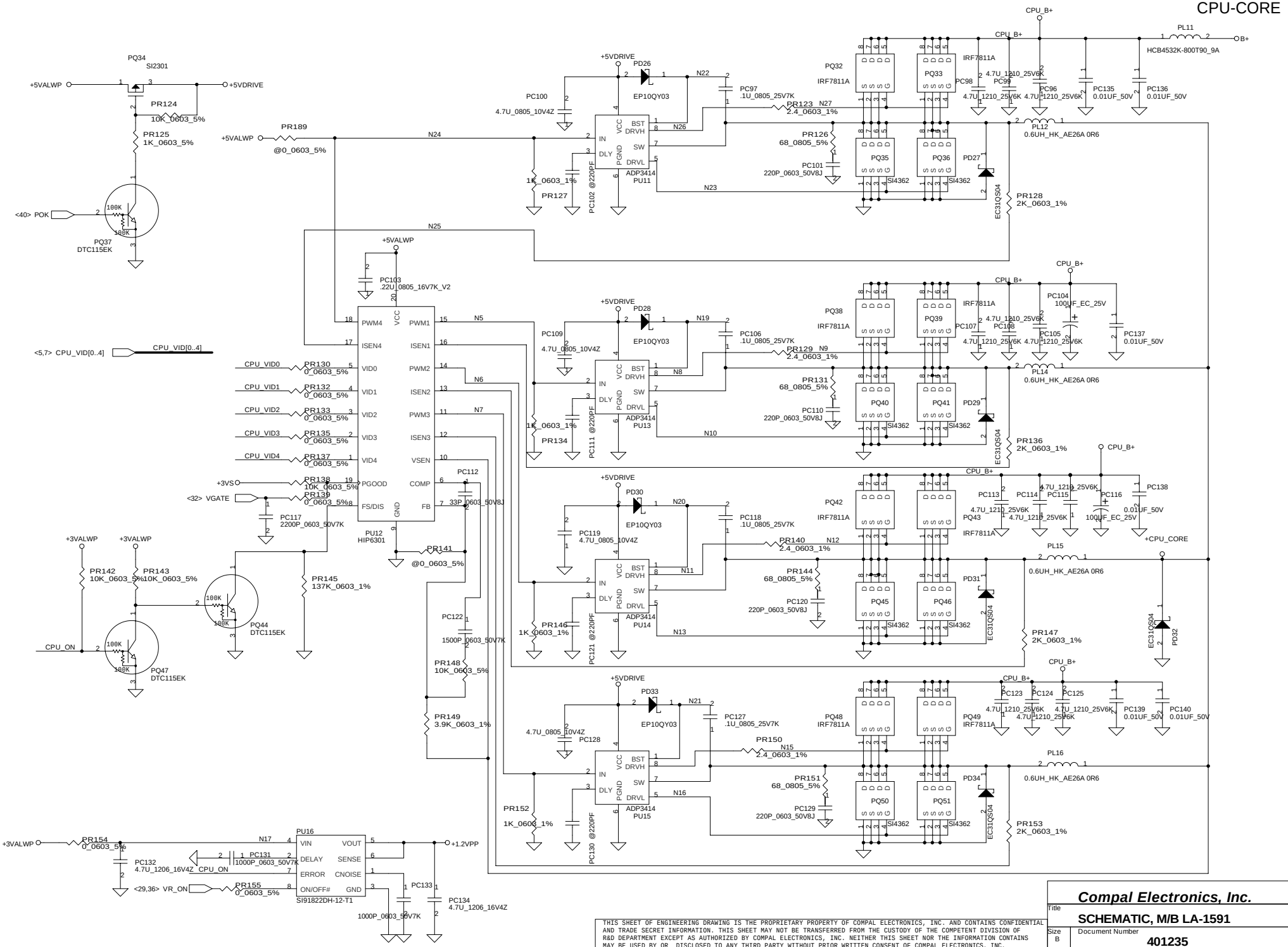


THIS SHEET OF ENGINEERING DRAWING IS THE PROPRIETARY PROPERTY OF COMPAL ELECTRONICS, INC. AND CONTAINS CONFIDENTIAL AND TRADE SECRET INFORMATION. THIS SHEET MAY NOT BE TRANSFERRED FROM THE CUSTODY OF THE COMPETENT DIVISION OF R&D DEPARTMENT EXCEPT AS AUTHORIZED BY COMPAL ELECTRONICS, INC. NEITHER THIS SHEET NOR THE INFORMATION CONTAINS MAY BE USED BY OR DISCLOSED TO ANY THIRD PARTY WITHOUT PRIOR WRITTEN CONSENT OF COMPAL ELECTRONICS, INC.

**Compal Electronics, Inc.**

Title: **SCHEMATIC, M/B LA-1591**

Size: B | Document Number: **401235** | Rev: **2B**

Date: 星期五, 五月 16, 2003 | Sheet 43 of 47

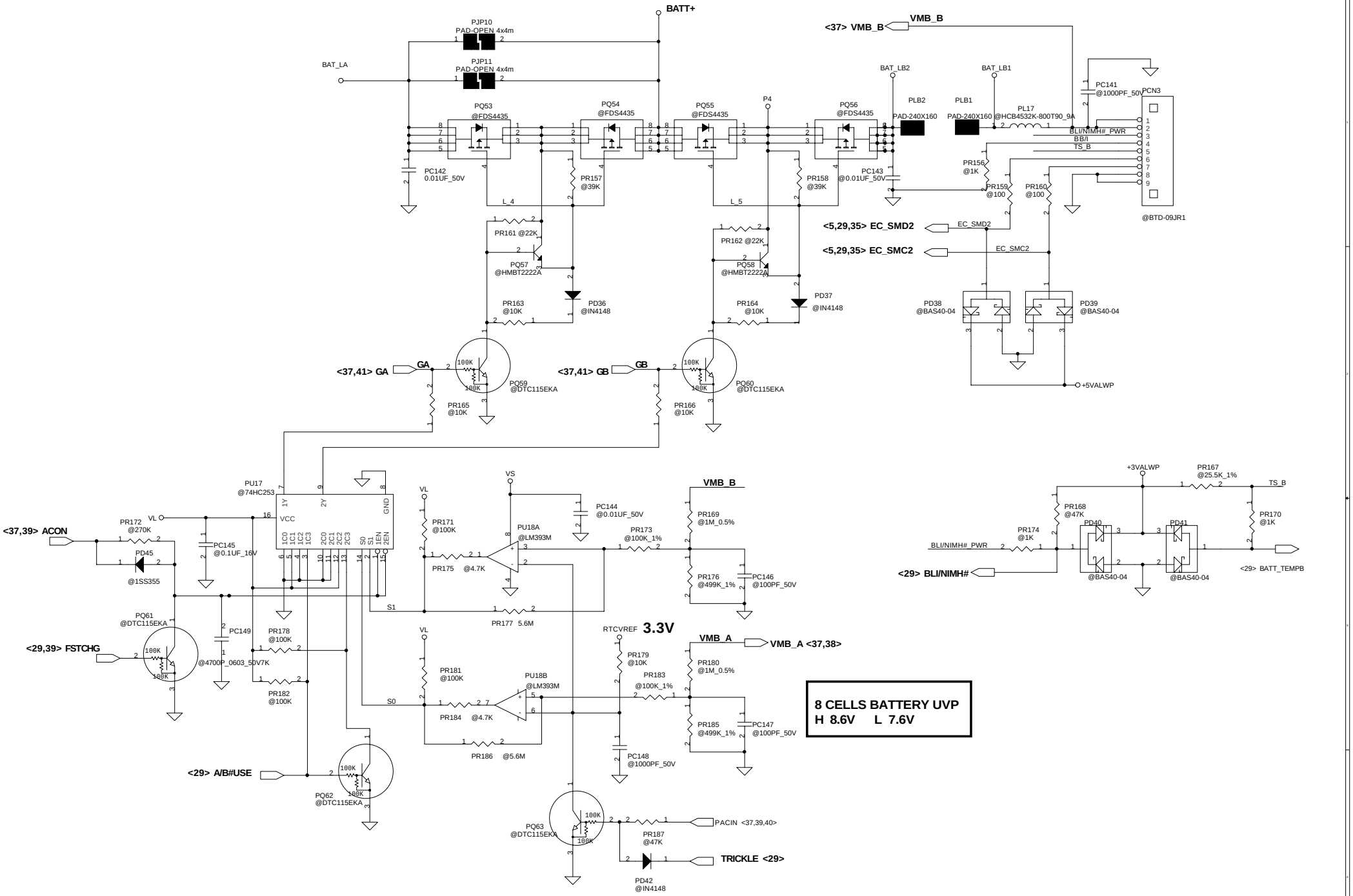


THIS SHEET OF ENGINEERING DRAWING IS THE PROPRIETARY PROPERTY OF COMPAL ELECTRONICS, INC. AND CONTAINS CONFIDENTIAL AND TRADE SECRET INFORMATION. THIS SHEET MAY NOT BE TRANSFERRED FROM THE CUSTODY OF THE COMPETENT DIVISION OF R&D DEPARTMENT EXCEPT AS AUTHORIZED BY COMPAL ELECTRONICS, INC. NEITHER THIS SHEET NOR THE INFORMATION CONTAINS MAY BE USED BY OR DISCLOSED TO ANY THIRD PARTY WITHOUT PRIOR WRITTEN CONSENT OF COMPAL ELECTRONICS, INC.

**Compal Electronics, Inc.**

Title: SCHEMATIC, M/B LA-1591

| Size | Document Number | Rev |
|---|---|---|
| B | 401235 | 2B |

Date: 星期五, 五月 16, 2003 Sheet 44 of 47

# *Version change list (P.I.R. List)*



| Item | Fixed Issue | Reason for change | PAGE | Modify List | M.B Ver. |
|---|---|---|---|---|---|
| 1 | | When battery charge system has noise | 39 | change PR51 from 10K to 100K | **0.2** |
| | | | | change PR55 from 4.7K to 10K | **0.2** |
| | | | 40 | Add PD44 (RB715F) | **0.2** |
| | | | | change P81 from 10K to 270K | **0.2** |
| 2 | | When battery only system can't power on | 37 | Add PD43 (RB715F) | **0.2** |
| | | | | Delete PZD2 | **0.2** |
| 3 | | Unplugged AC,system don't have backlight with LCD | 44 | Add PC149 (4700PF_0603) | **0.2** |
| 4 | | Change thermal protection point | 38 | change PR33 from 3.6K to 3.32K | **0.2** |
| | | | | change PR42 from 1.96K to 3.32K | **0.2** |
| | | | | change PR40 from 10K to 16.9K | **0.2** |
| 5 | | Change detector circuit | 37 | change PR2 from 10K to 5.6K | **0.2** |
| | | | 39 | change PR52 from 10K to 3K | **0.2** |
| 1 | | **Change Vin detector voltage"L" from 16.9V to 14.11V ("H" from 17.9V to 17.58V)** | 37 | change PR5 from 22K to 160K | **0.3** |
| | | | | change PR6 from 20K to 24K | **0.3** |
| 2 | | **system heavy loading with plugging out AC ( battery capacity is full )will cause system shut down** | 44 | Add PD45 (1SS355) | **0.3** |
| 3 | | **regulated 1.5VALWP to 1.538V for H.W require** | 42 | change PR122 from 150K to 160K | **0.3** |
| 4 | | **improve CPU core voltage drop** | 43 | change PR149 from 3K to 3.9K | **0.3** |

THIS SHEET OF ENGINEERING DRAWING IS THE PROPRIETARY PROPERTY OF COMPAL ELECTRONICS, INC. AND CONTAINS CONFIDENTIAL AND TRADE SECRET INFORMATION. THIS SHEET MAY NOT BE TRANSFERRED FROM THE CUSTODY OF THE COMPETENT DIVISION OF R&D DEPARTMENT EXCEPT AS AUTHORIZED BY COMPAL ELECTRONICS, INC. NEITHER THIS SHEET NOR THE INFORMATION CONTAINS MAY BE USED BY OR DISCLOSED TO ANY THIRD PARTY WITHOUT PRIOR WRITTEN CONSENT OF COMPAL ELECTRONICS, INC.

# Version change list (P.I.R. List)



| Item | Fixed Issue | Reason for change | PAGE | Modify List | M.B. Ver. |
|---|---|---|---|---|---|
| 1 | | Footprint error | 16 | Change RP66 footprint to 8P4R-0402-NEW<br>Change RP67 footprint to 8P4R-0402-NEW | 0.1 |
| 2 | | Voltage level shift | 15 | Change R290.1 connect from +12VS to +3VS | 0.1 |
| 3 | | Design error | 20<br><br>21 | R453.1 short with R454.1, C654.2 and U50.4 only<br>( Don't connect to U50.3 and C660.1 )<br>Change R458.1 from +5VALW to VDDA<br>Change U51.5 from +5VALW to +5V_AMP | 0.1 |
| 4 | | VIA's data sheet modification | 25 | U23 pin definition shift | 0.1 |
| 5 | | Add second source for SD socket | 26 | Add JP36 | 0.1 |
| 6 | | Net conflict | 22 | Add R498 | 0.1 |
| 7 | | Solve for audio background noise | 17 | Add R497 | 0.1 |
| 8 | | No design requirement | 17 | Delecte R125 & R145 | 0.1 |
| 9 | | Solve for power charger issue | 29 | Delete C324 | 0.1 |
| 10 | | Solve for resume fail from press reset button | 29 | Delete D22, and fix R229 to ground. | 0.1 |
| 11 | | Solve for volume too loud from headphone | 30 | Connect HPS signal to U45.11 | 0.1 |
| 12 | | Footprint error | 24 | Change Y1 footprint to CS-10 | 0.2 |
| 13 | | No need to control SUSB#, always fix to GND | 31 | Add R499 to GND | 0.2 |
| 14 | | Prevent floating | 34 | Fix U21.11, U21.13, and U19.12 to GND | 0.2 |
| 15 | | Intel recommend | 9 | L53 change to low DCR | 0.2 |
| 16 | | Unnecessary external pull-up | 35 | Delete RP8, RP17, RP24 and R164 | 0.2 |
| 17 | | Cost down | 6 | Delete C464, C482, C510, C534, and C38<br>Change C53, C156, C52, and C157 to 470U_D2_2.5v_15m | 0.2 |
| 18 | | Solve for USB fail issue | 17 | Add R500 | 2.0 |

THIS SHEET OF ENGINEERING DRAWING IS THE PROPRIETARY PROPERTY OF COMPAL ELECTRONICS, INC. AND CONTAINS CONFIDENTIAL AND TRADE SECRET INFORMATION. THIS SHEET MAY NOT BE TRANSFERRED FROM THE CUSTODY OF THE COMPETENT DIVISION OF R&D DEPARTMENT EXCEPT AS AUTHORIZED BY COMPAL ELECTRONICS, INC. NEITHER THIS SHEET NOR THE INFORMATION CONTAINS MAY BE USED BY OR DISCLOSED TO ANY THIRD PARTY WITHOUT PRIOR WRITTEN CONSENT OF COMPAL ELECTRONICS, INC.

# Version change list (P.I.R. List)



| Item | Fixed Issue | Reason for change | PAGE | Modify List | M.B. Ver. |
|---|---|---|---|---|---|

THIS SHEET OF ENGINEERING DRAWING IS THE PROPRIETARY PROPERTY OF COMPAL ELECTRONICS, INC. AND CONTAINS CONFIDENTIAL AND TRADE SECRET INFORMATION. THIS SHEET MAY NOT BE TRANSFERRED FROM THE CUSTODY OF THE COMPETENT DIVISION OF R&D DEPARTMENT EXCEPT AS AUTHORIZED BY COMPAL ELECTRONICS, INC. NEITHER THIS SHEET NOR THE INFORMATION CONTAINS MAY BE USED BY OR DISCLOSED TO ANY THIRD PARTY WITHOUT PRIOR WRITTEN CONSENT OF COMPAL ELECTRONICS, INC.