RM3 (Paltrow MLK) Block Diagram

PWA : Y503R/Y504R(TV)
PWB : Y505R
SCH : Y506R

VER : 3A

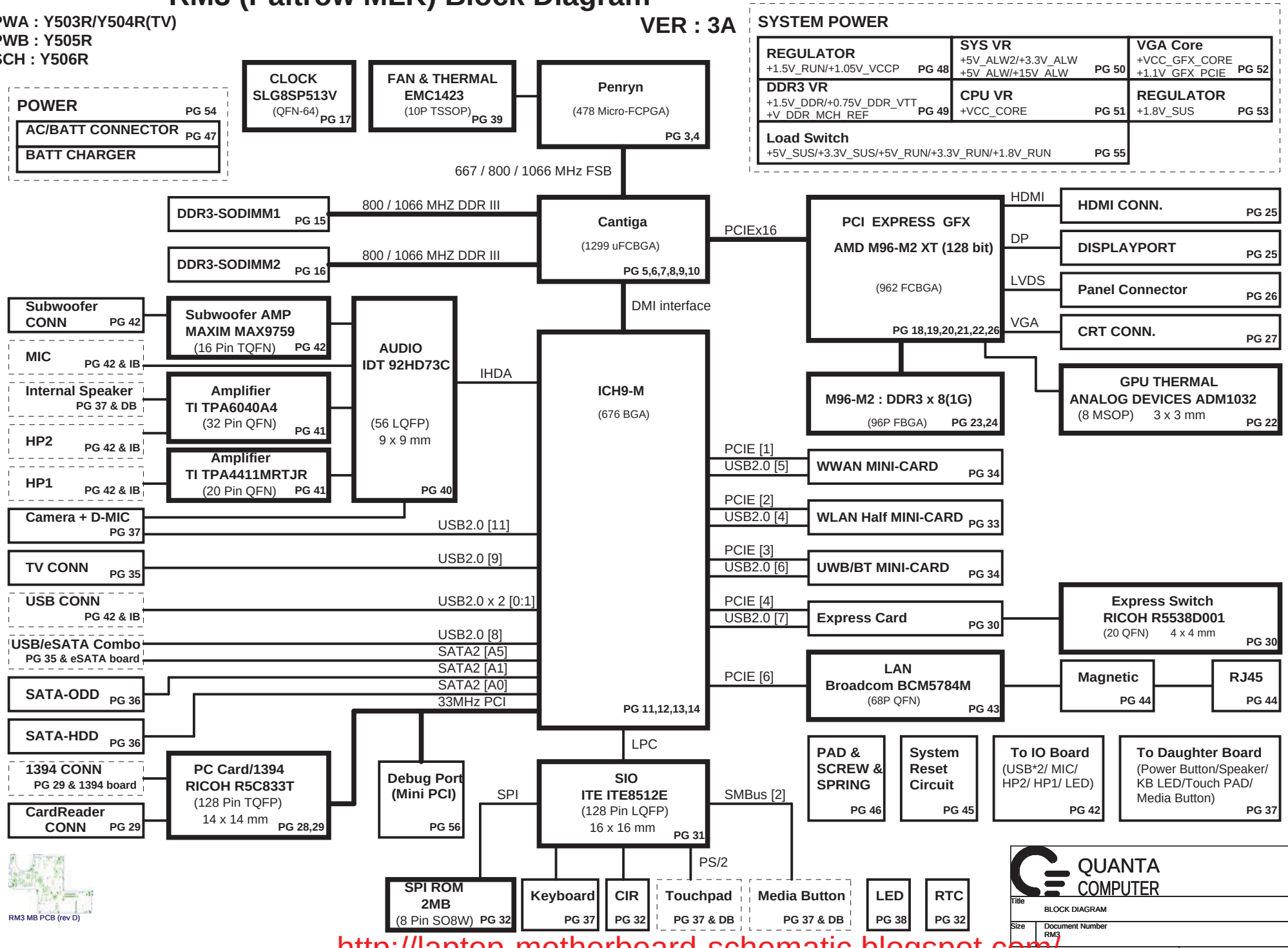

http://laptop-motherboard-schematic.blogspot.com/

Table of Contents

PAGE	DESCRIPTION
1	Block Diagram
2	Front Page
3-4	CPU (Penryn)
5-10	NB (Cantiga)
11-14	SB (ICH9-M)
15-16	DDR3 SO-DIMM(204P)
17	Clock Generator
18-24	GPU (M96XT)
25	HDMI & DP
26	LCD connector
27	CRT
28	Card reader PCI interface
29	Card reader & 1394 CONN
30	Express card
31	SIO (IT8512)
32	Flash/RTC/CIR
33	WLAN
34	WWAN/WPAN
35	USB & eSATA & TV
36	SATA HDD & ODD
37	KB/CCD/UI
38	LED
39	FAN/Thermal
40-42	Audio/CONN/Subwoofer (92HD73C).
43-44	LAN/RJ45 (BCM5784M)
45	System Reset Circuit
46	PAD & SCREW & SPRING
47	CHARGER (MAX8731A)
48	1.05VCCP & 1.5VRUN
49	1.5_DDR/0.75(TPS51116)
50	3.3V/5V/15V (MAX17020)
51	CPU_POWER (ISL6262A) - 2 phase
52	VGA_M86 (MAX8632)
53	1.8V_SUS (TPS51117)
54	DCIN & Batt
55	Load Switch
56	Debug Port (Mini PCI)
57	SMBUS BLOCK
58	Power statu
59	Power Block Diagram

Power States

POWER PLANE	VOLTAGE	PAGE	DESCRIPTION	CONTROL SIGNAL	ACTIVE IN
+PWR_SRC	10V~+19V	4,26,32,34,48,49,50,51,52,55	MAIN POWER		S0~S5
+RTC_CELL	+3.0V~+3.3V	11,14,31,32	RTC		S0~S5
+3.3V_ALW	+3.3V	3,13,26,31,32,34,36,37,38,44,46,49,52,53,54	8051 POWER	ALWON	S0~S5
+5V_ALW	+5V	35,36,46,48,49,52,53,54	LCD/CHARGE POWER	ALWON	S0~S5
+15V_ALW	+15V	26,36,37,52,53	LARGE POWER	+5V_ALW	S0~S5
+3.3V_LAN	+3.3V	42,43	LAN POWER	AUX_ON	
+5V_SUS	+5V	14,38,50,51,53	SLP_S5# CTRLD POWER	SUS_ON	
+3.3V_SUS	+3.3V	3,11,12,13,14,20,30,37,38,43,48,49,50,51,53	SLP_S5# CTRLD POWER	3.3V_SUS_ON	
+1.8V_SUS	+1.8V	6,8,9,15,48,49,50,53,55	SODIMM POWER	DDR_ON	
+0.9V_DDR_VTT	+0.9V	16,49,53	SODIMM POWER	0.9V_DDR_VTT_ON	
+5V_RUN	+5V	14,20,25,27,36,37,38,39,40,41,53	SLP_S3# CTRLD POWER	RUN_ON	
+3.3V_RUN	+3.3V	6,8,9,11,12,13,14,15,17,19,20,22,25,26,27,28,30,33,34,36,38,39,40,41,42,53,55	SLP_S3# CTRLD POWER	3.3V_RUN_ON	
+1.8V_RUN	+1.8V	19,20,21,22,23,24,25,38,53	SDVO POWER	RUN_ON	
+1.5V_RUN	+1.5V	4,9,14,30,33,34,48,,53,55	CALISTOGA/ICH8 POWER	1.5V_RUN_ON	
+1.25V_RUN	+1.25V	6,9,14,49,53	CALISTOGA/ICH8 POWER	1.25V_RUN_ON	
+1.05V_VCCP	+1.05V	3,4,5,6,8,9,11,14,37,48,55	CPU/CALISTOGA/ICH8 POWER	1.05V_RUN_ON	
+VCC_CORE	+0.7V~+1.5V	4,51	CPU CORE POWER	IMVP_VR_ON	
+LCDVCC	+3.3V	26	LCD Power	LCDVCC_TST_EN & ENVDD	
+5V_MOD	+5V	36	Module Power	MODC_EN#	
+5V_HDD	+5V	36	HDD Power	HDDC_EN#	
+5V_ALW2	+5V	37,38.52,53	LED power source	LDO output	

GND PLANE	PAGE	DESCRIPTION
8731AGND	46	
AGND_0.9V	49	
AGND_DC/DC	52	
AGND_DC2	48	
AGND_DDR	49	
AGND_ISL6260	51	
GND	ALL	

QUANTA COMPUTER

Title	FRONTPAGE	
Size	Document Number RM3	Rev 3A
Date: Wednesday, May 06, 2009	Sheet 2 of 60	

http://laptop-motherboard-schematic.blogspot.com/

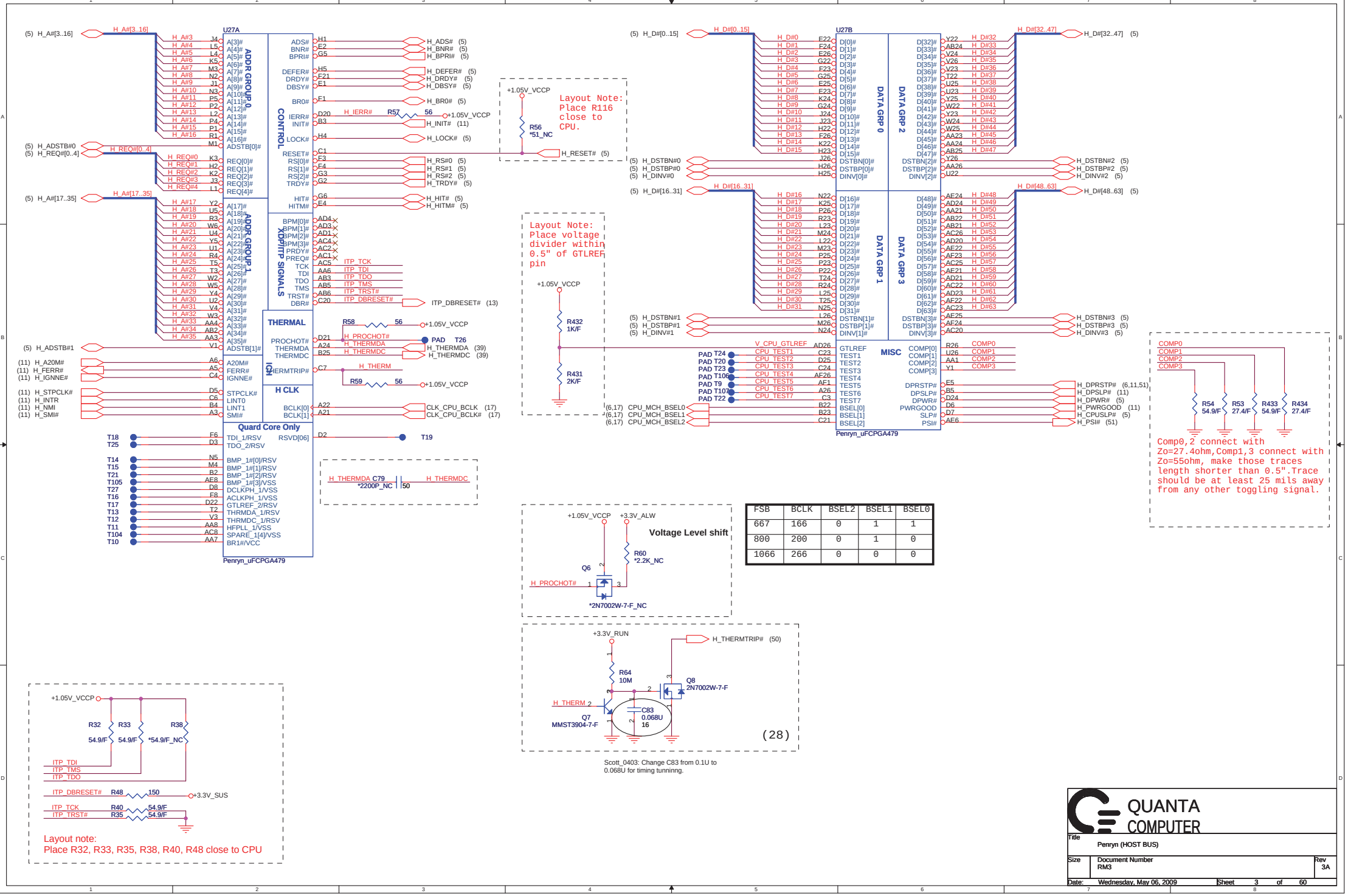

FSB	BCLK	BSEL2	BSEL1	BSEL0
667	166	0	1	1
800	200	0	1	0
1066	266	0	0	0

http://laptop-motherboard-schematic.blogspot.com/

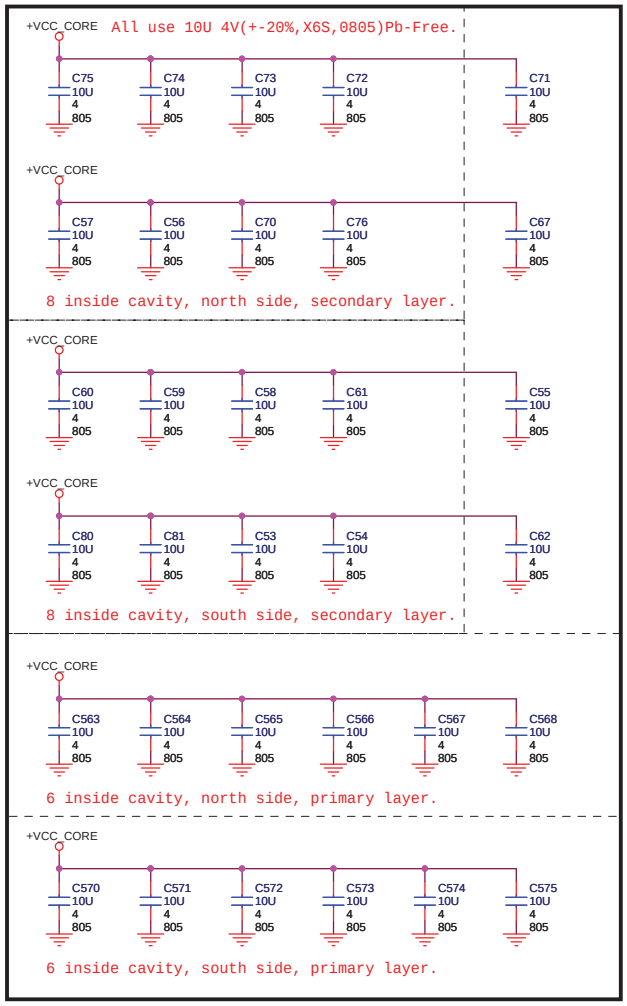

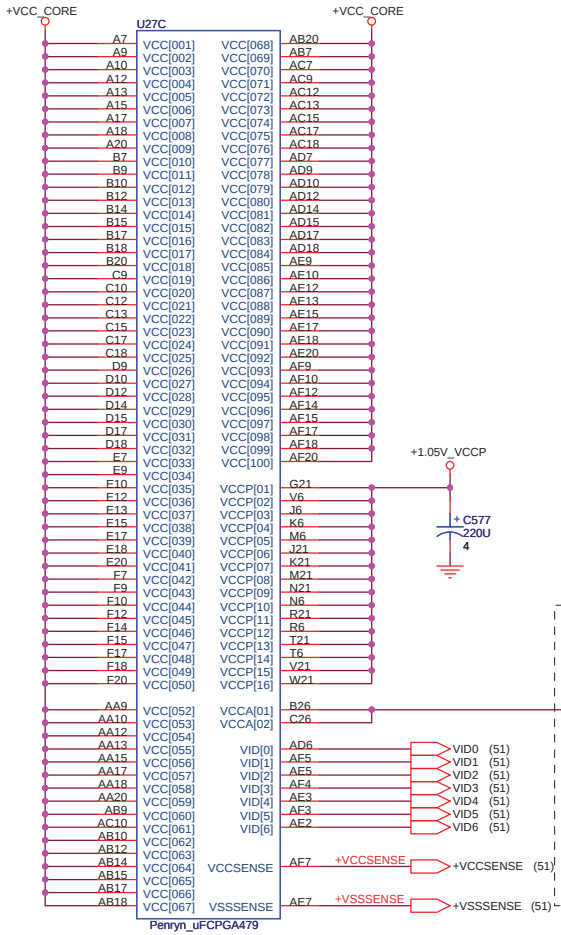

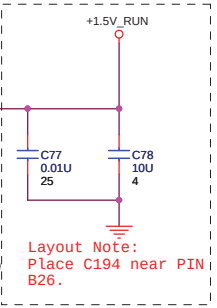

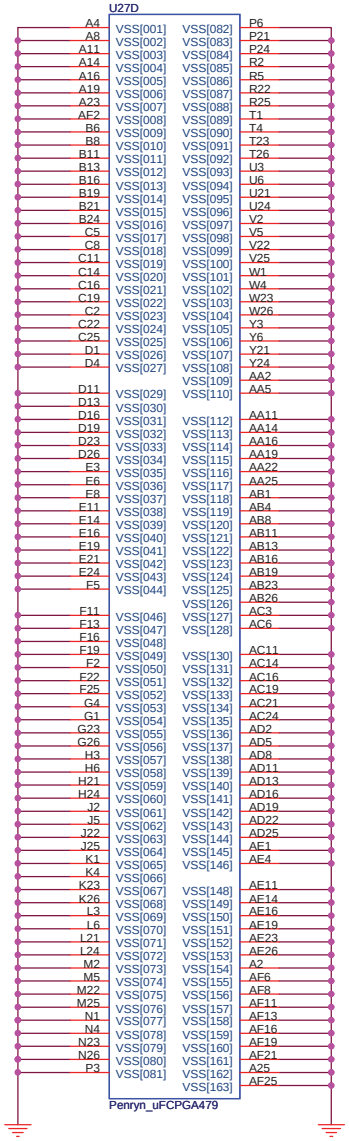

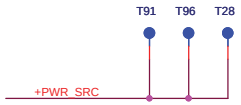

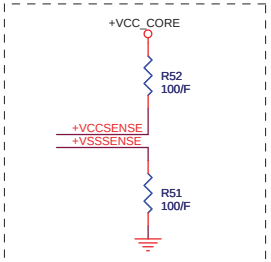

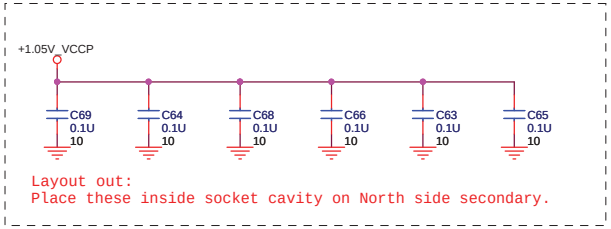

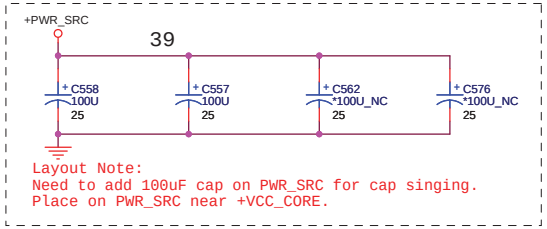

QUANTA COMPUTER

Title	Penryn (POWER/NC)	
Size	Document Number RM3	Rev 3A
Date: Wednesday, May 06, 2009	Sheet 4 of 60	

http://laptop-motherboard-schematic.blogspot.com/

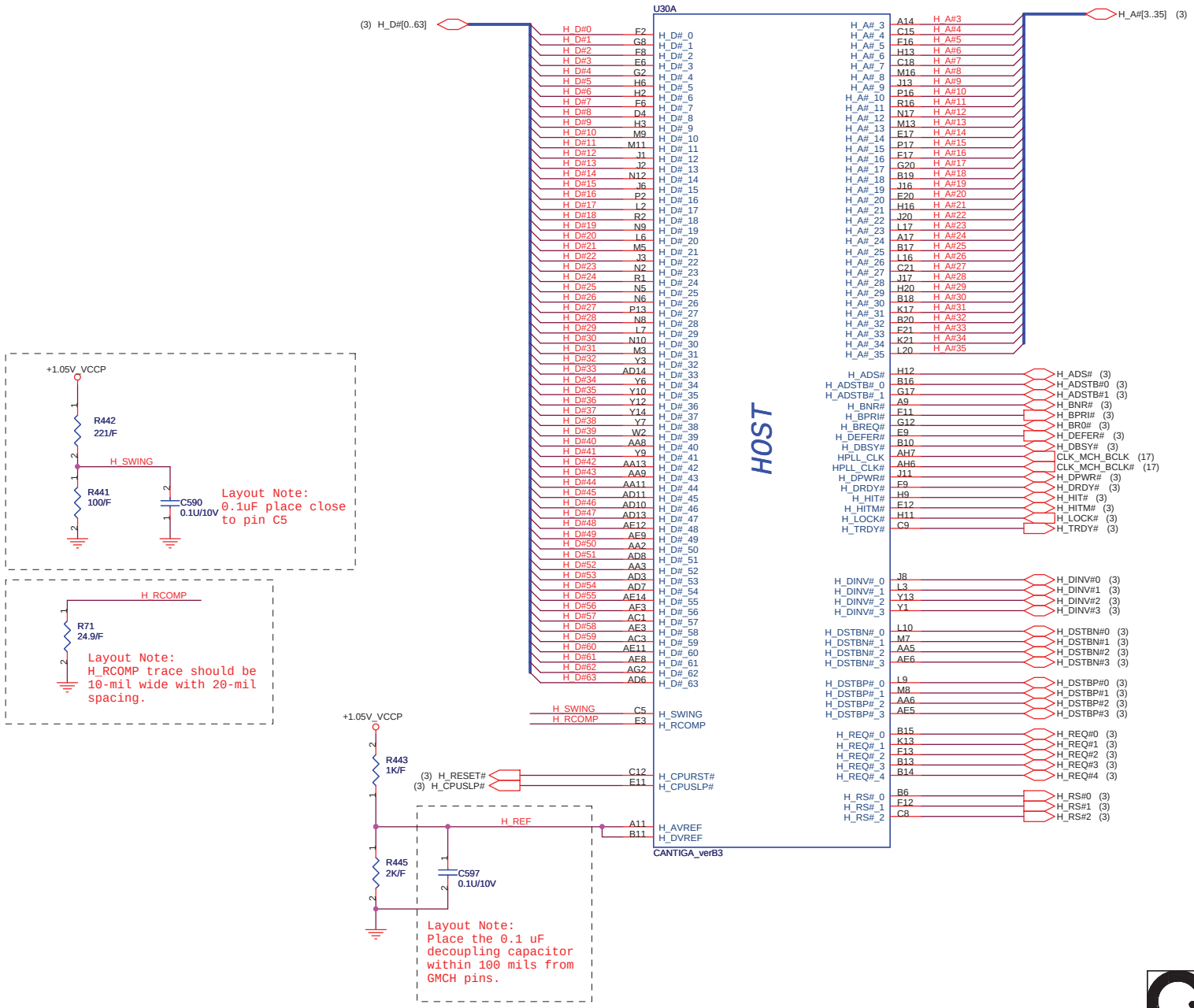

QUANTA COMPUTER

Title	Cantiga_A (HOST)	
Size	Document Number RM3	Rev 3A
Date: Wednesday, May 06, 2009	Sheet 5 of 60	

http://laptop-motherboard-schematic.blogspot.com/

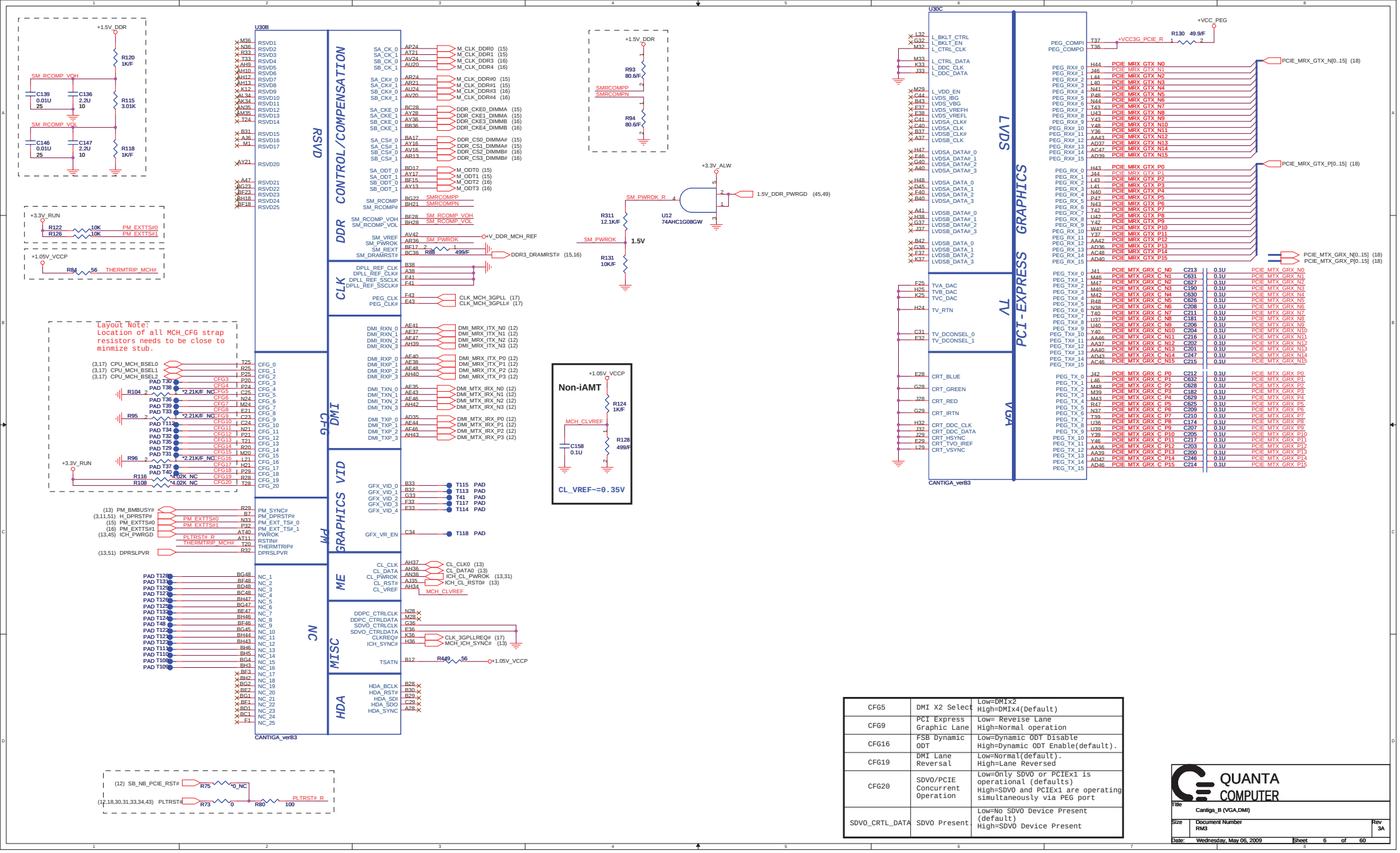

CFG5	DMI X2 Select	Low=DMIx2 High=DMIx4(Default)
CFG9	PCI Express Graphic Lane	Low= Reveise Lane High=Normal operation
CFG16	FSB Dynamic ODT	Low=Dynamic ODT Disable High=Dynamic ODT Enable(default).
CFG19	DMI Lane Reversal	Low=Normal(default). High=Lane Reversed
CFG20	SDVO/PCIE Concurrent Operation	Low=Only SDVO or PCIEx1 is operational (defaults) High=SDVO and PCIEx1 are operating simultaneously via PEG port
SDVO_CRTL_DATA	SDVO Present	Low=No SDVO Device Present (default) High=SDVO Device Present

QUANTA COMPUTER

Title	Cantiga_B (VGA,DMI)		
Size	Document Number RM3		Rev 3A
Date: Wednesday, May 06, 2009		Sheet 6 of 60	

http://laptop-motherboard-schematic.blogspot.com/

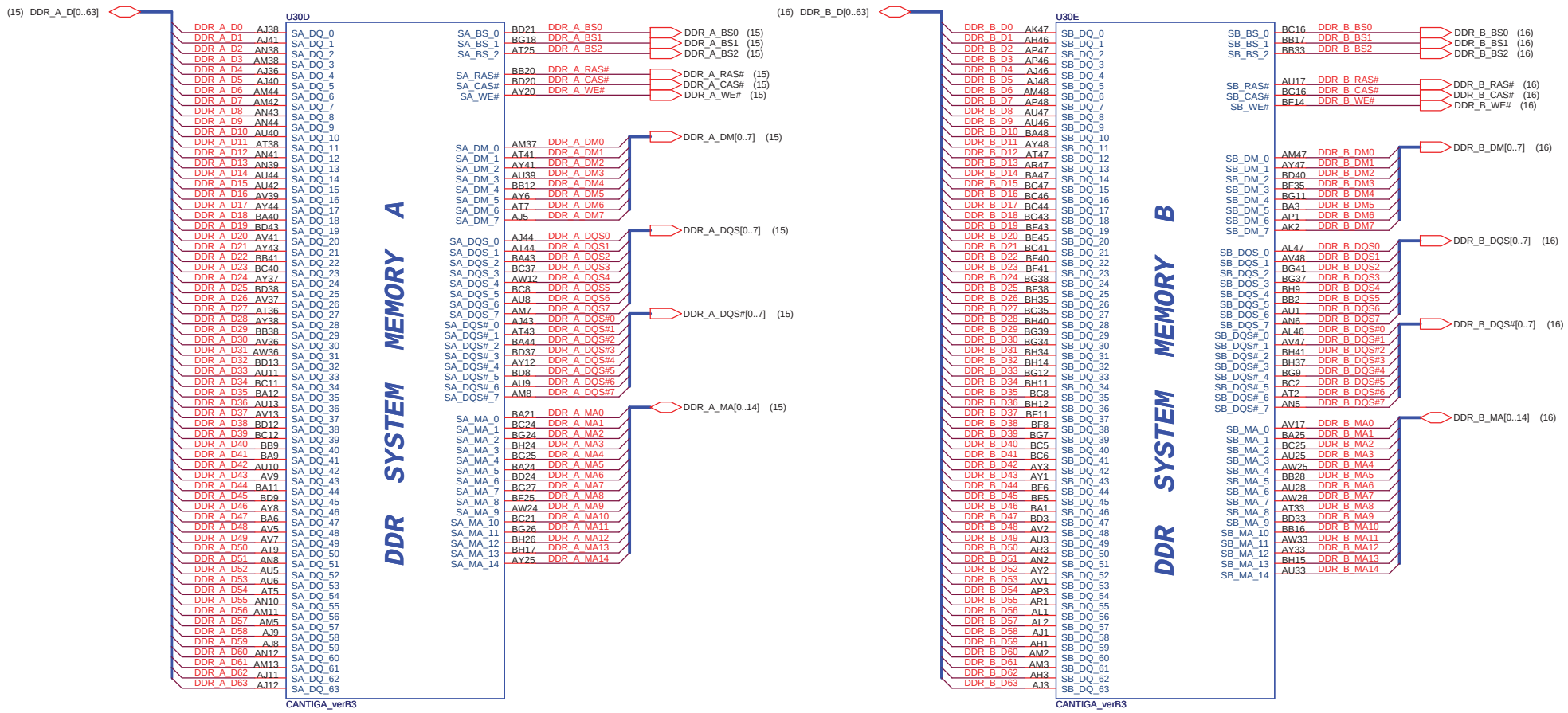

QUANTA COMPUTER

Title	Cantiga_C (DDR3)		
Size	Document Number RM3		Rev 3A
Date: Wednesday, May 06, 2009		Sheet 7 of 60	

http://laptop-motherboard-schematic.blogspot.com/

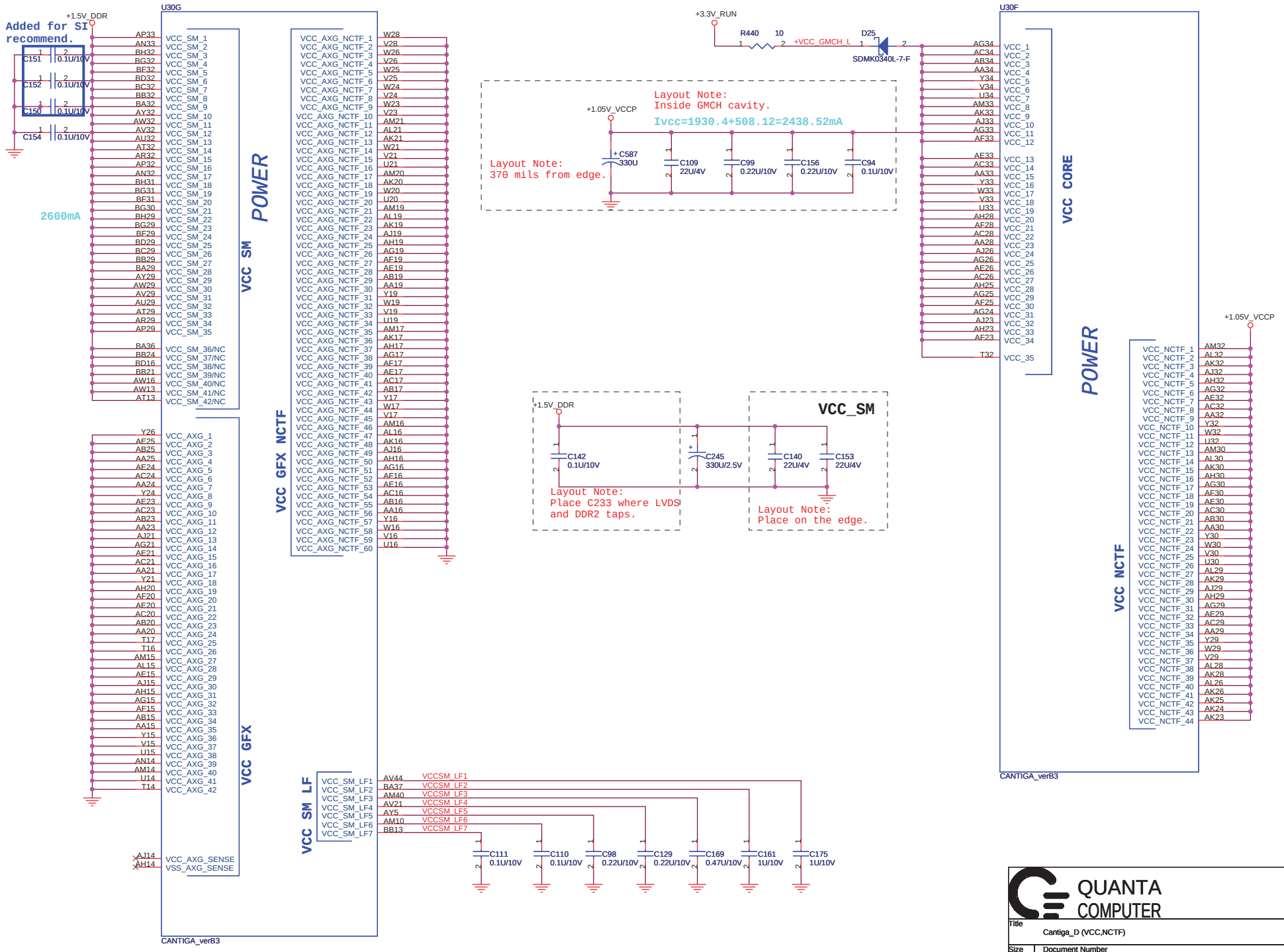

http://laptop-motherboard-schematic.blogspot.com/

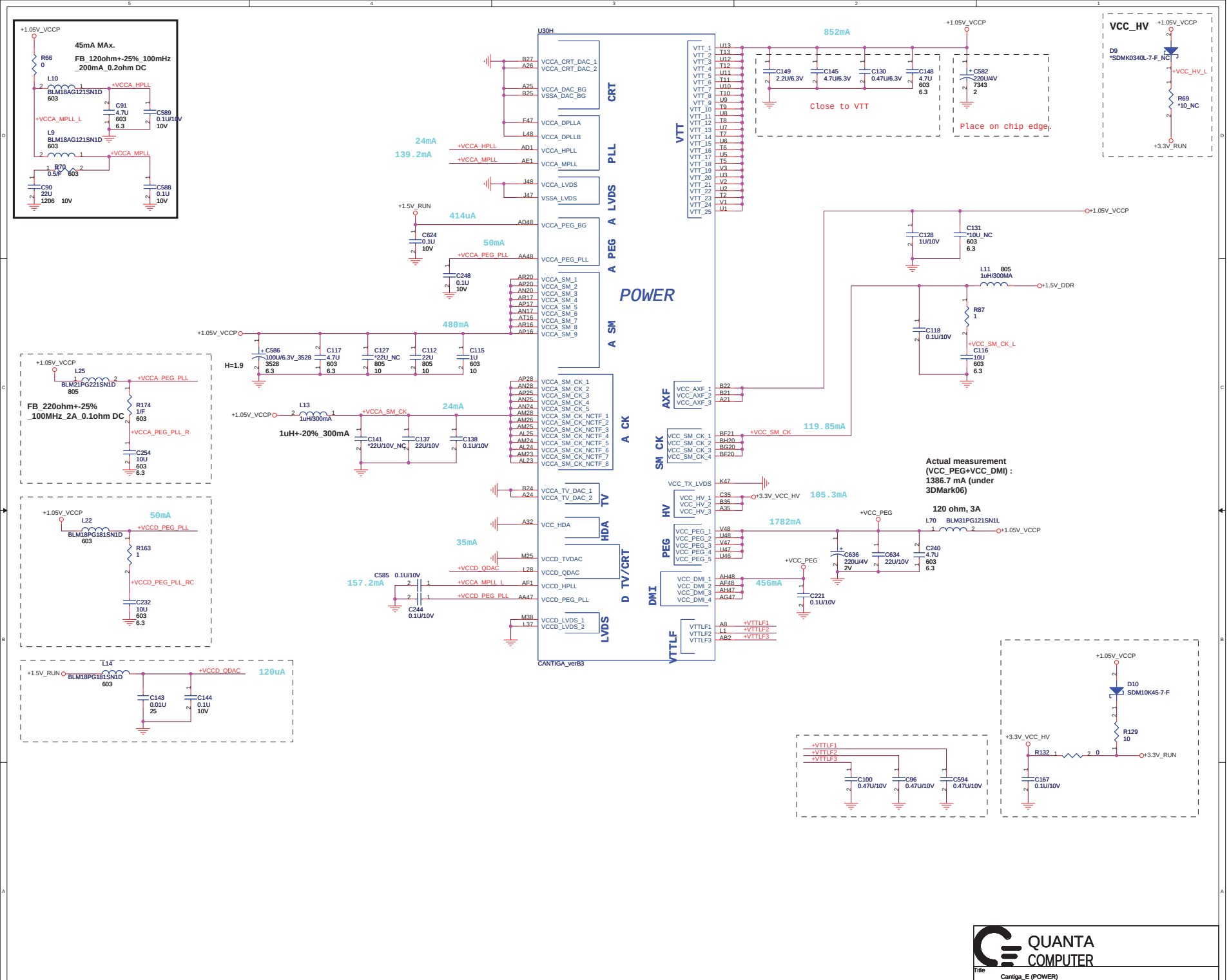

QUANTA COMPUTER

Title: Cantiga_E (POWER)

Size: Document Number: RM3 | Rev: 3A

Date: Wednesday, May 06, 2009 | Sheet 9 of 60

http://laptop-motherboard-schematic.blogspot.com/

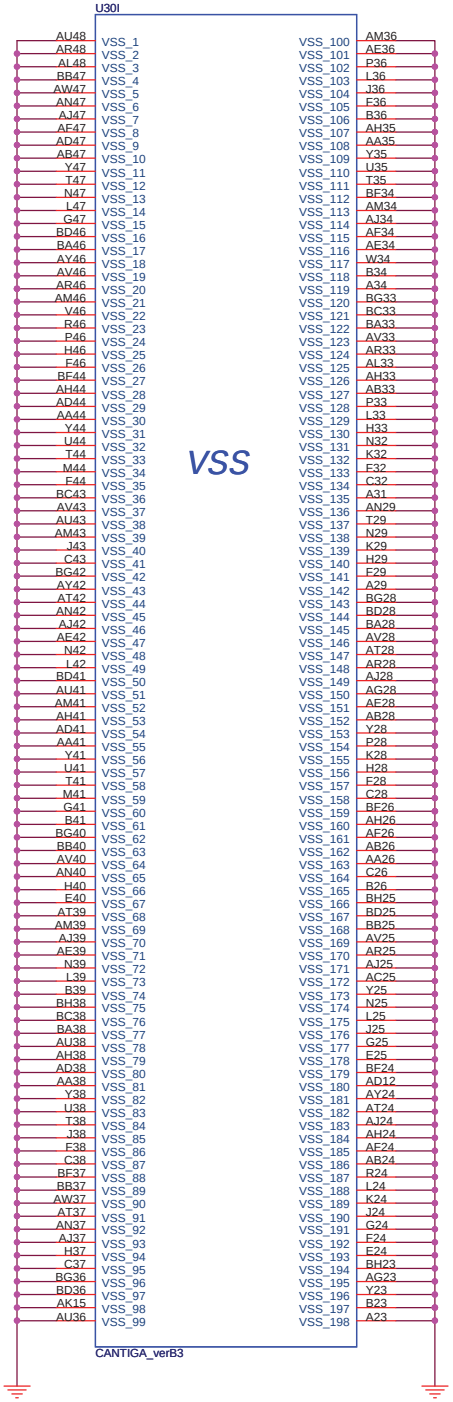

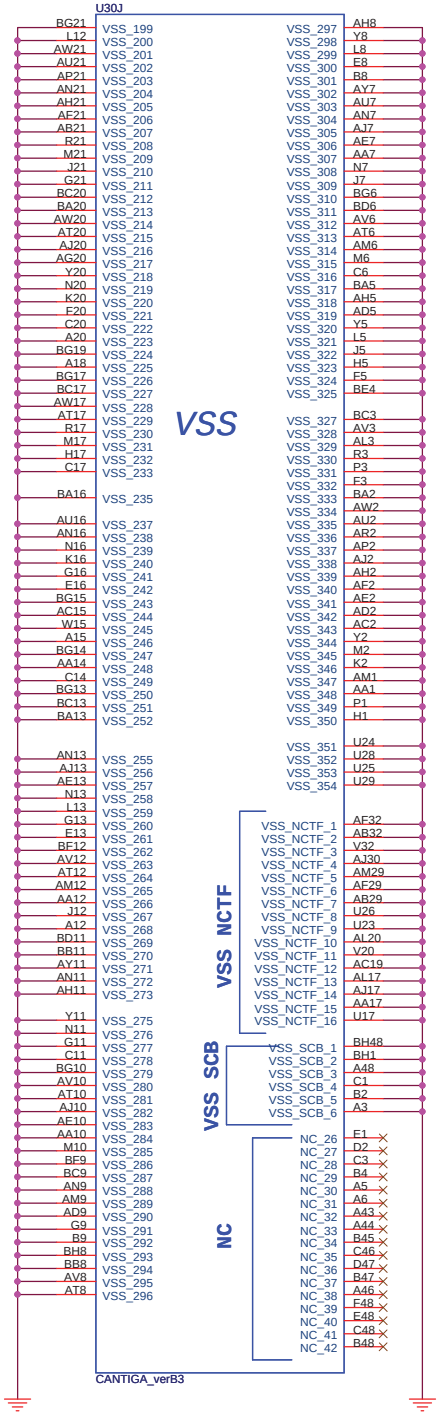

QUANTA COMPUTER

Title	Cantiga_F (VSS)
Size	Document Number RM3 — Rev 3A
Date	Wednesday, May 06, 2009 — Sheet 10 of 60

http://laptop-motherboard-schematic.blogspot.com/

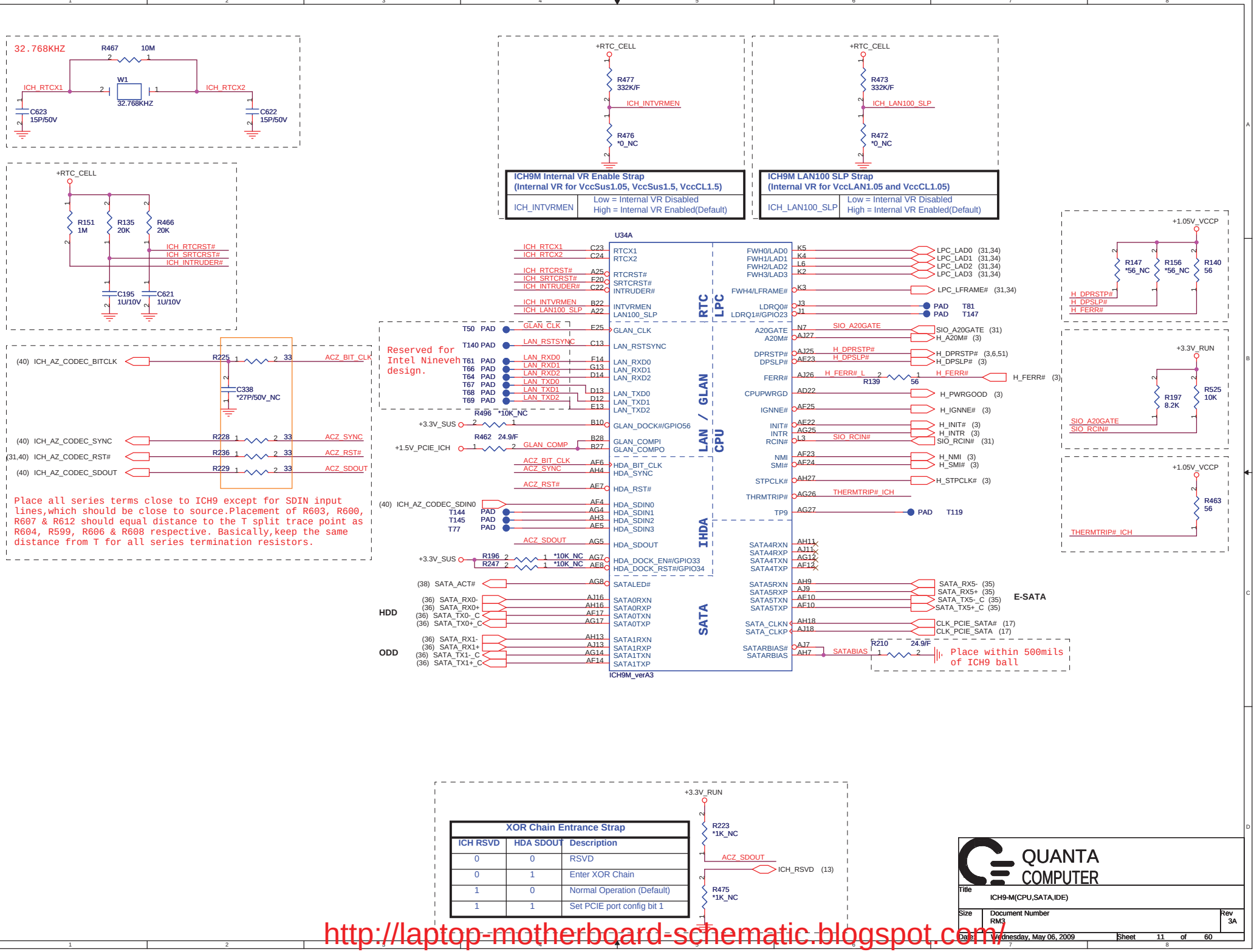

http://laptop-motherboard-schematic.blogspot.com/

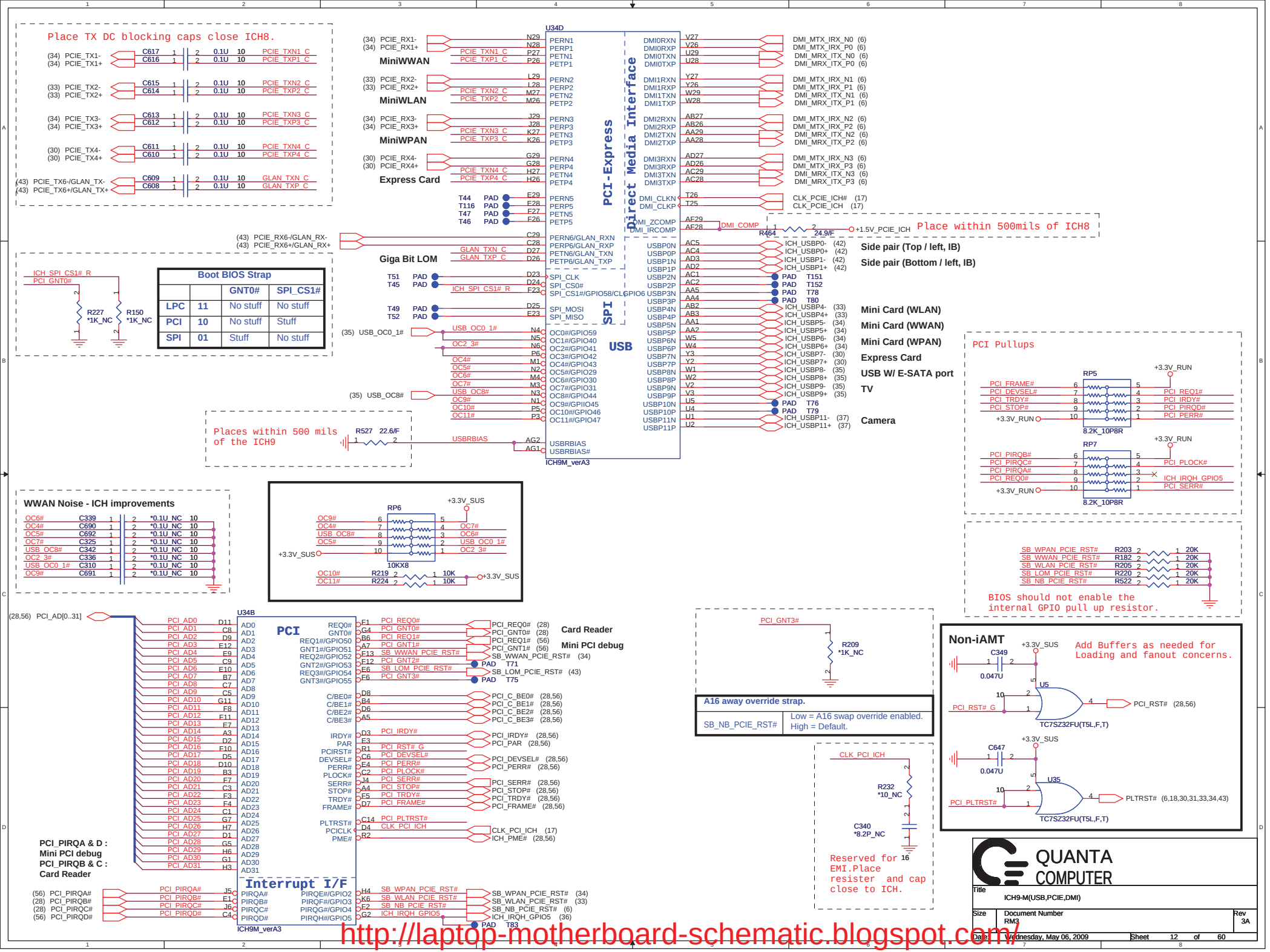

http://laptop-motherboard-schematic.blogspot.com/

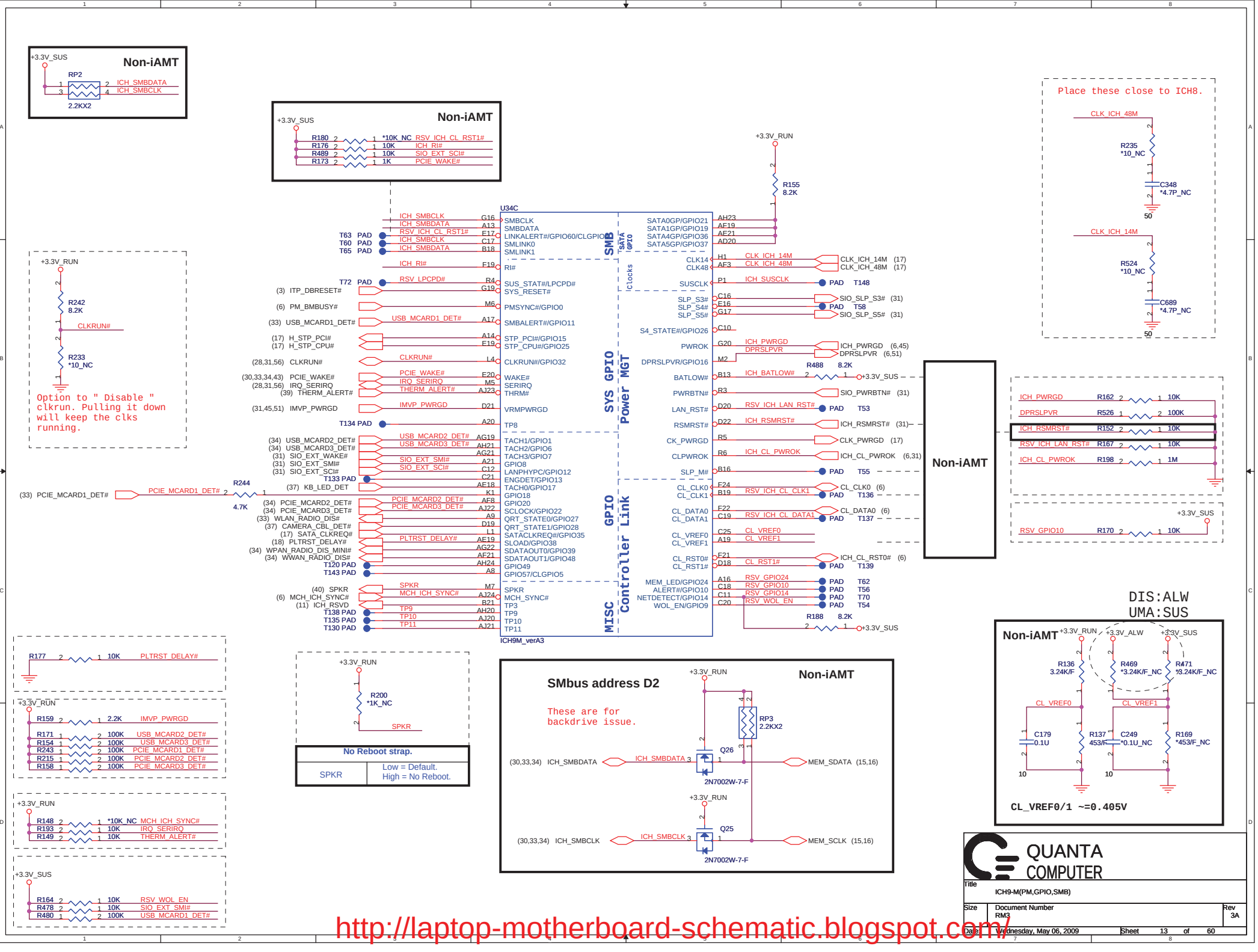

http://laptop-motherboard-schematic.blogspot.com/

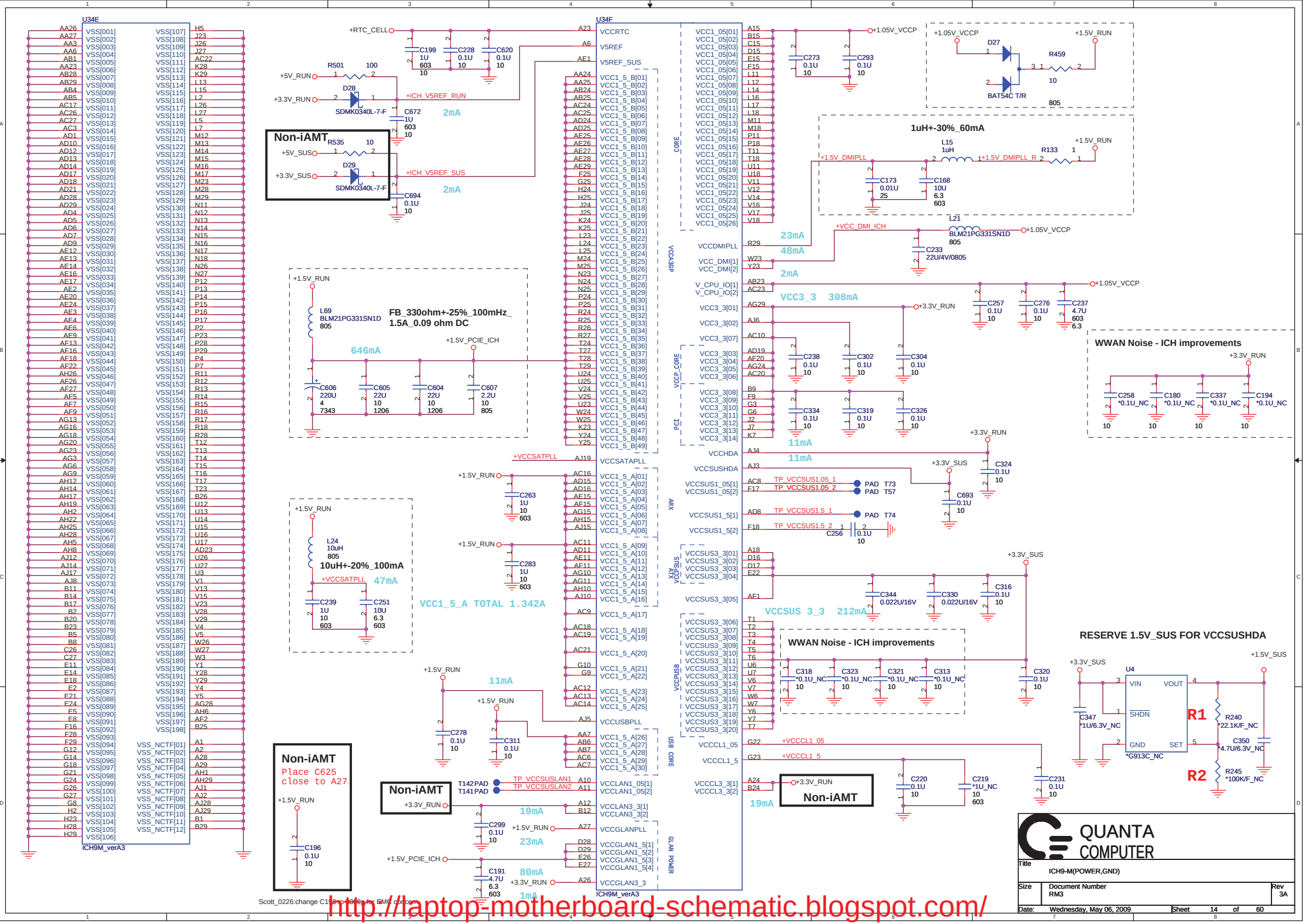

http://laptop-motherboard-schematic.blogspot.com/

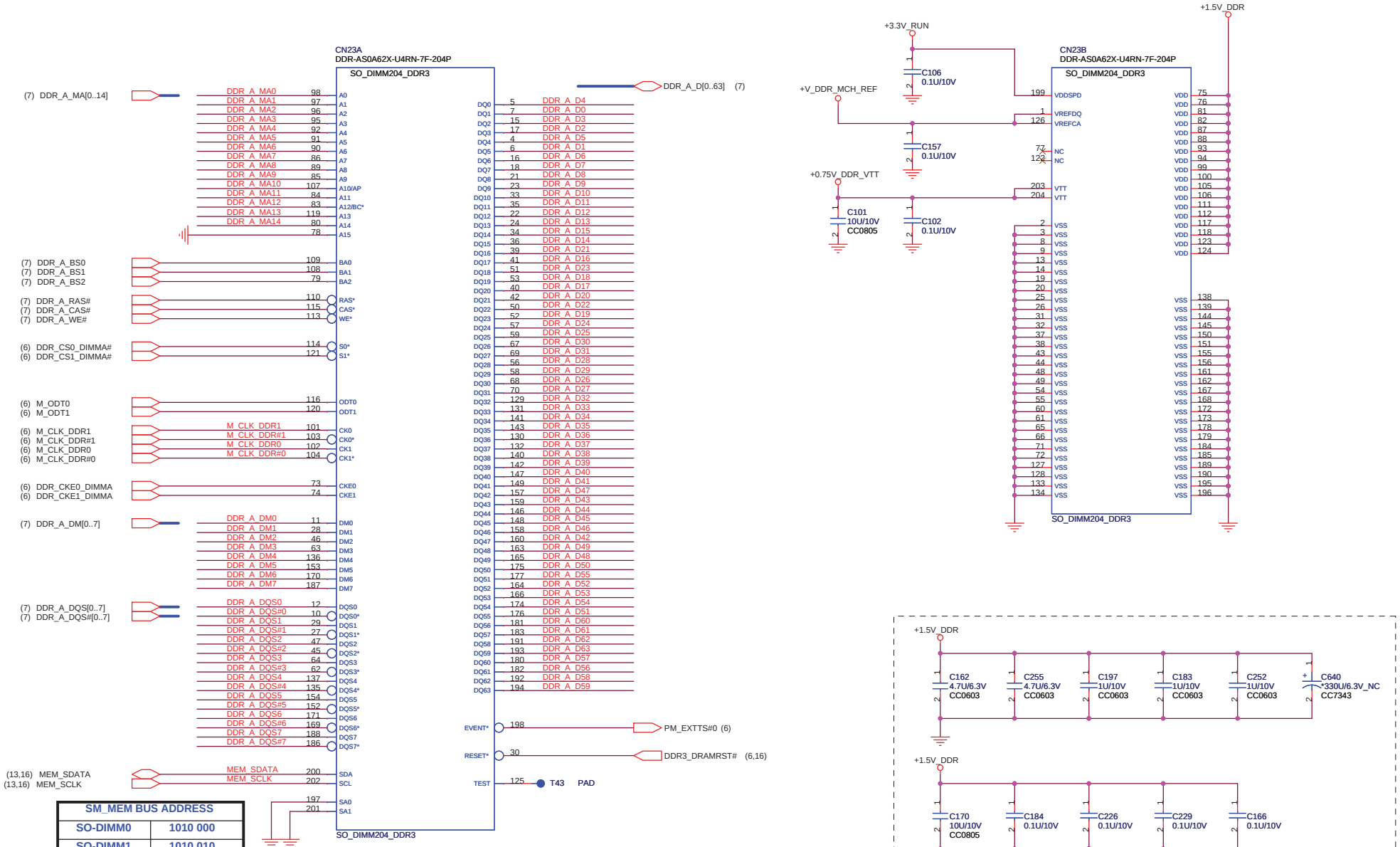

SM_MEM BUS ADDRESS	
SO-DIMM0	1010 000
SO-DIMM1	1010 010

QUANTA COMPUTER

Title	DDR3 SO-DIMM1 (204P)	
Size	Document Number RM3	Rev 3A
Date: Wednesday, May 06, 2009	Sheet 15 of 60	

http://laptop-motherboard-schematic.blogspot.com/

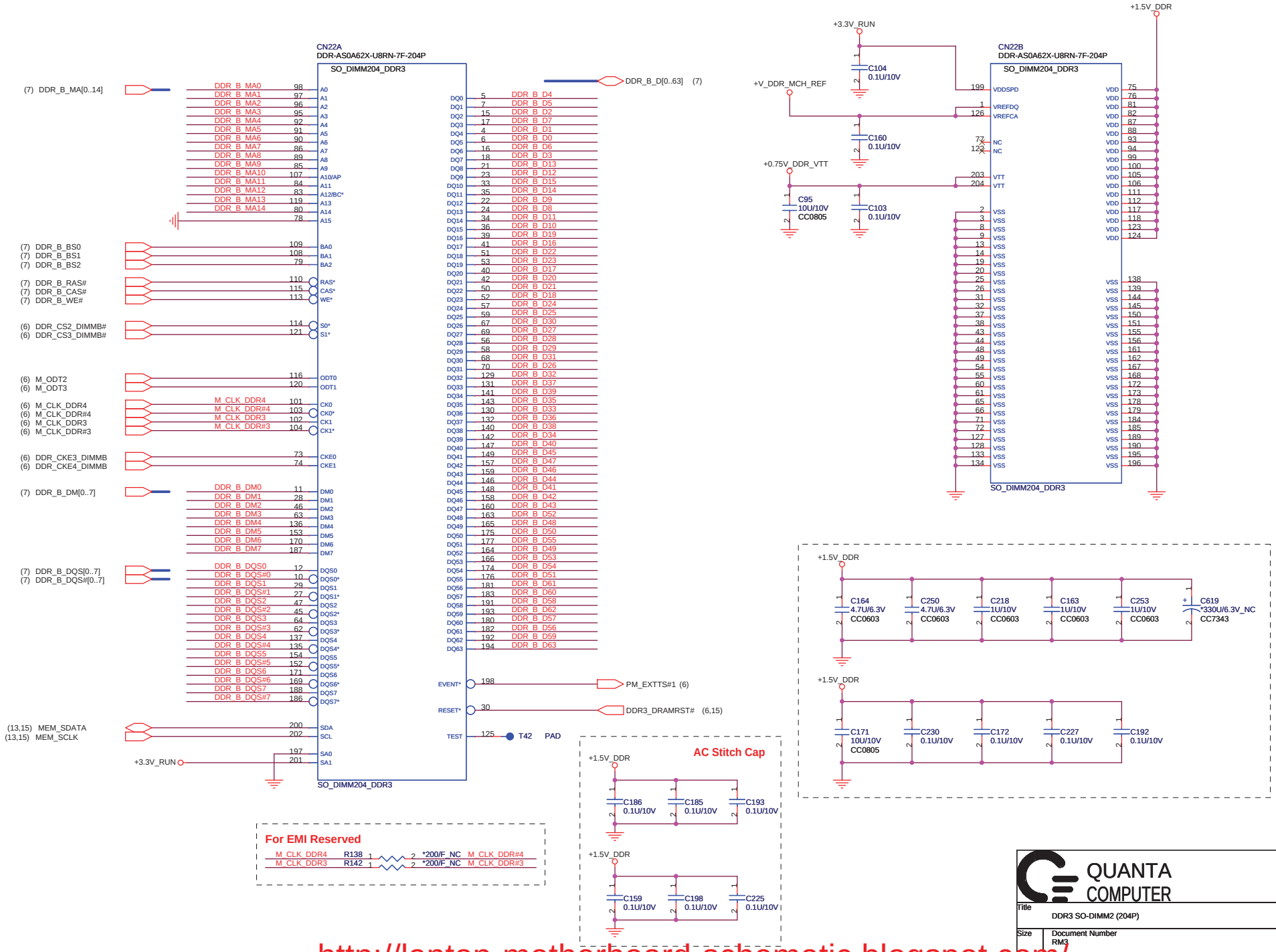

http://laptop-motherboard-schematic.blogspot.com/

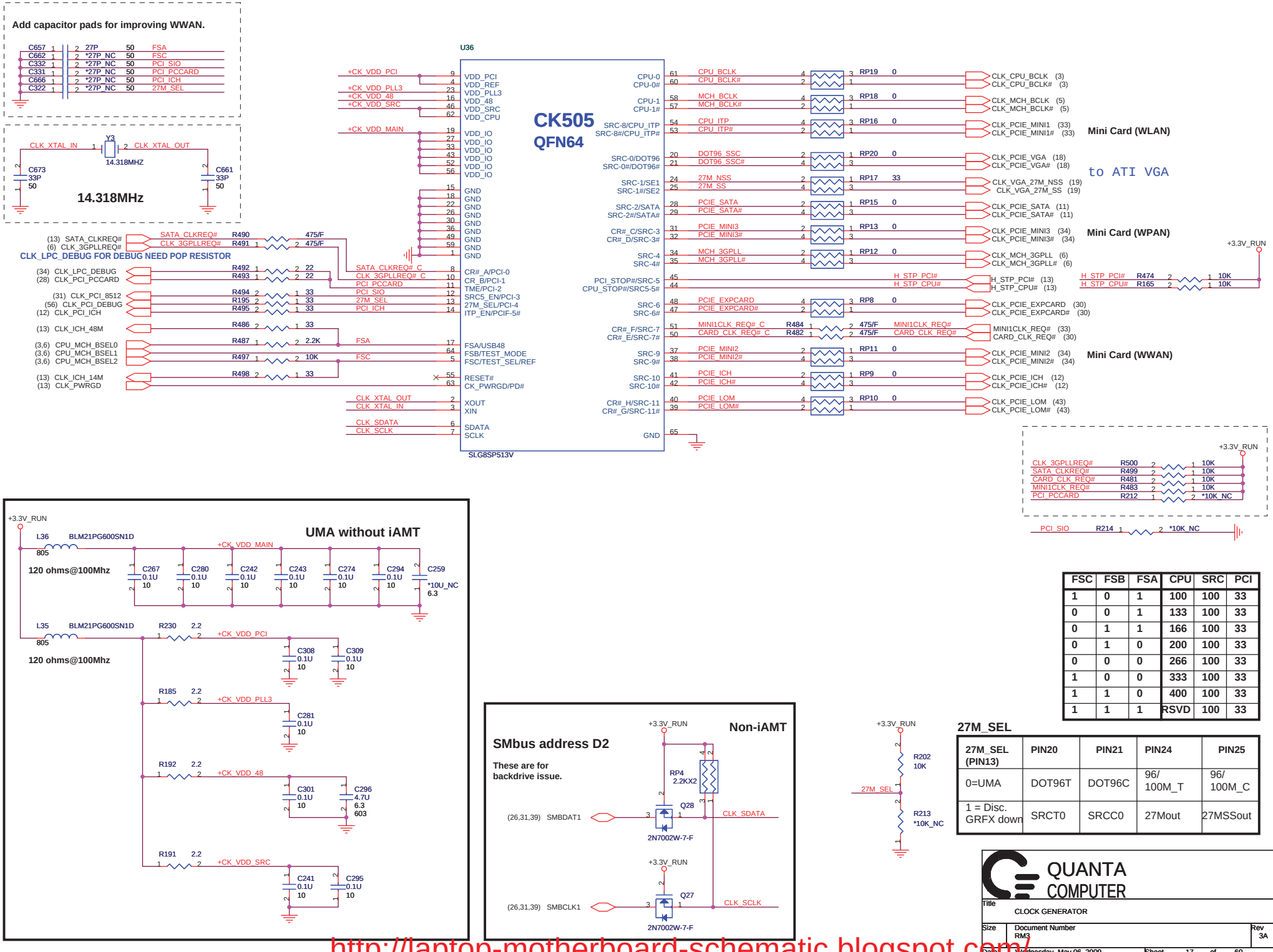

FSC	FSB	FSA	CPU	SRC	PCI
1	0	1	100	100	33
0	0	1	133	100	33
0	1	1	166	100	33
0	1	0	200	100	33
0	0	0	266	100	33
1	0	0	333	100	33
1	1	0	400	100	33
1	1	1	RSVD	100	33

27M_SEL

27M_SEL (PIN13)	PIN20	PIN21	PIN24	PIN25
0=UMA	DOT96T	DOT96C	96/ 100M_T	96/ 100M_C
1 = Disc. GRFX down	SRCT0	SRCC0	27Mout	27MSSout

http://laptop-motherboard-schematic.blogspot.com/

ASIC	PN	100-CK	QCI P/N
M96-M2 XT A13	216-0729051	100-CK3186	AJ072900T08
M97-M2 LP A11	216-0731001	100-CG1806	AJ073100T01

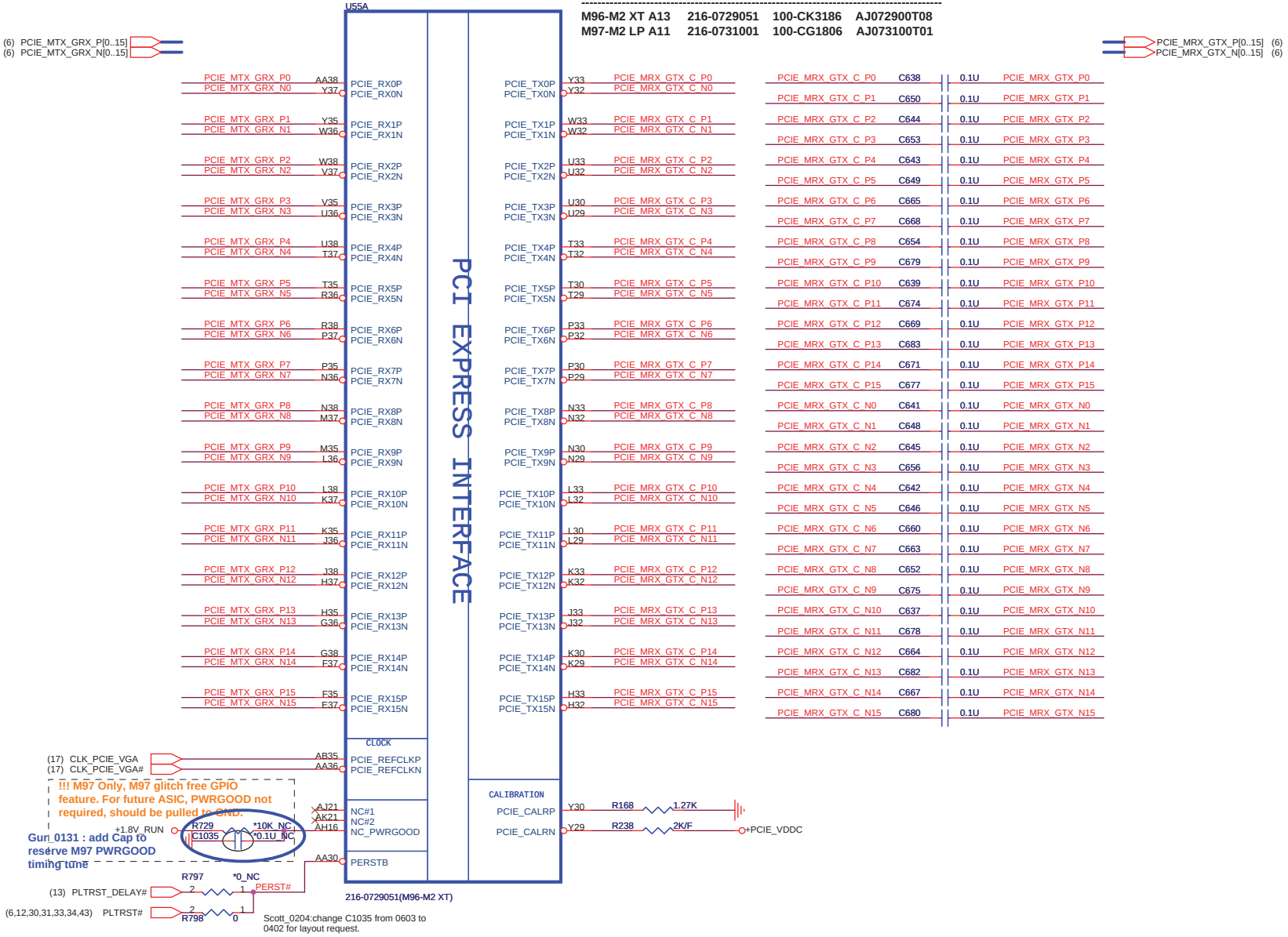

Scott_0204:change C1035 from 0603 to 0402 for layout request.

QUANTA COMPUTER

Title	M97LP_PCIE	
Size	Document Number RM3	Rev 3A
Date: Wednesday, May 06, 2009	Sheet 18 of 60	

http://laptop-motherboard-schematic.blogspot.com/

Memory Straps		RAM_TYPE_CFG3	RAM_TYPE_CFG2	RAM_TYPE_CFG1	RAM_TYPE_CFG0
800 MHz 512MB(32M*16) Hynix_Tiva die	H5TQ5163MFR-12	1	1	1	1
reserve for Qimonda		1	1	1	0
reserve for Samsung		1	1	0	1
800 MHz 1GB(64M*16) Hynix_Orion die	H5TQ1G63BFR-12C	1	0	1	1
800 MHz 1GB(64M*16) Qimonda_A1 die	IDGH1G-04A1F1C-16X	1	0	1	0
800 MHz 1GB(64M*16) Samsung_E die	K4W1G1646E-HC12	1	0	0	1

Note : Required Frequency = 800 MHz

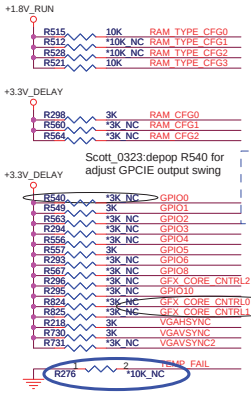

MEMORY APERTURE SIZE SELECT			
MEMORY SIZE	CFG2 GPIO13	CFG1 GPIO12	CFG0 GPIO11
128MB	0	0	0
256MB	0	0	1
64MB	0	1	0

Scott_0123:Change GPIO/Strap pin resistors value from 10K to 3K reduce M97/M96/M92 option changes.

Scott_0505:GFX_CORE_CNTRL0,GFX_CORE_CNTRL1 reserve 3K PU resistors to +3.3V_DELAY for S3 shut down solution.

CONFIGURATION STRAPS			
STRAPS	PIN	DESCRIPTION	SET
TX_PWRS_ENB	GPIO0	PCIE FULL TX OUTPUT SWING 0 = 50% Tx output swing 1 = Full Tx output swing	1
TX_DEEMPH_EN	GPIO1	PCIE TRANSMITTER DE-EMPHASIS ENABLED 0 = Disable ; 1 = Enable	1
BIF_GEN2_EN_A	GPIO2	0 = Advertises the PCIe device as 2.5 GT/s capable at power-on. 1 = Advertises the PCIe device as 5.0 GT/s capable at power-on.	0
GPIO_5_AC_BATT (M96-M2)	GPIO5	1 = AC (Performance mode) 0 = Battery saving mode	1
VGA_DIS	GPIO9	0: VGA Controller capacity enabled 1: The device will not be recognized as the system's VGA controller	0
BIOS_ROM_EN	GPIO22	Enable external BIOS ROM device 0 = Disable ; 1 = Enable	0
AUD[1] AUD[0]	VGAHSYNC VGAVSYNC	AUD[1:0]: 00 - No audio function; 01 - Audio for DisplayPort only; 10 - Audio for DisplayPort and HDMI if dongle is detected; 11 - Audio for both DisplayPort and HDMI.	11
VIP_DEVICE_STRAP_EN	BIOS_ROM_EN	VIP Device Strap Enable 0 = Disable ; 1 = Enable	0

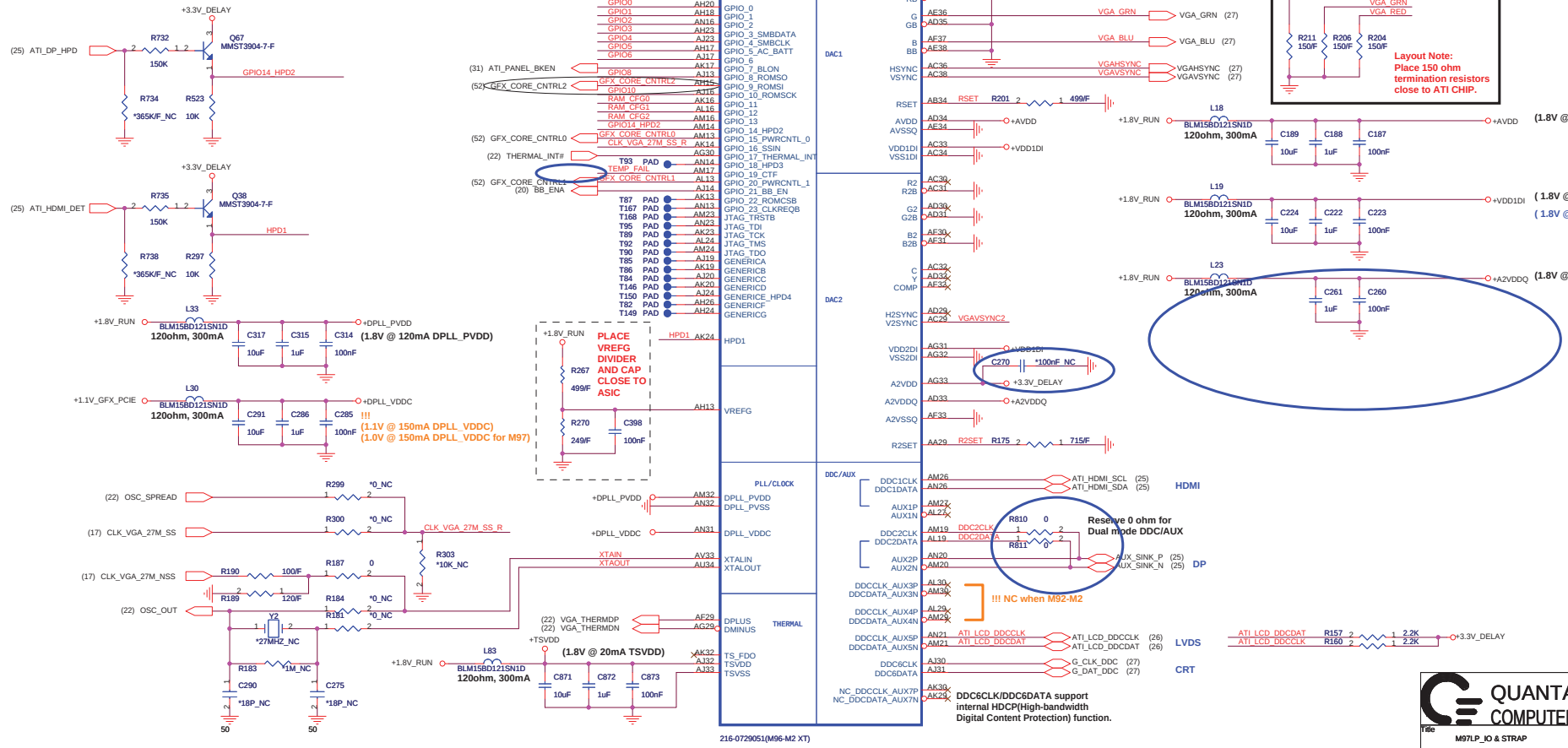

QUANTA COMPUTER

Title	M97LP_IO & STRAP	
Size	Document Number RM3	Rev 3A
Date: Wednesday, May 06, 2009	Sheet 19 of 60	

http://laptop-motherboard-schematic.blogspot.com/

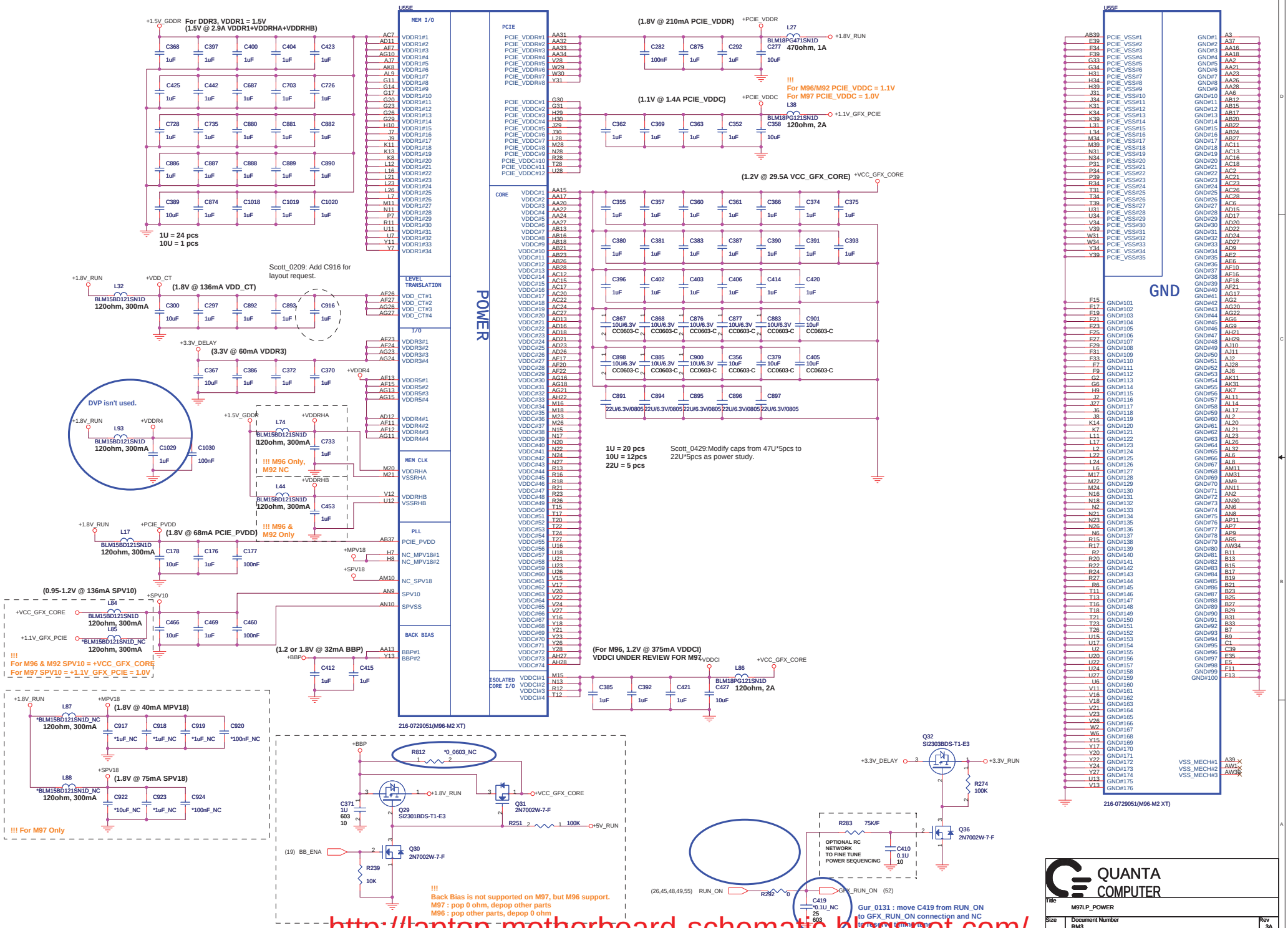

http://laptop-motherboard-schematic.blogspot.com/

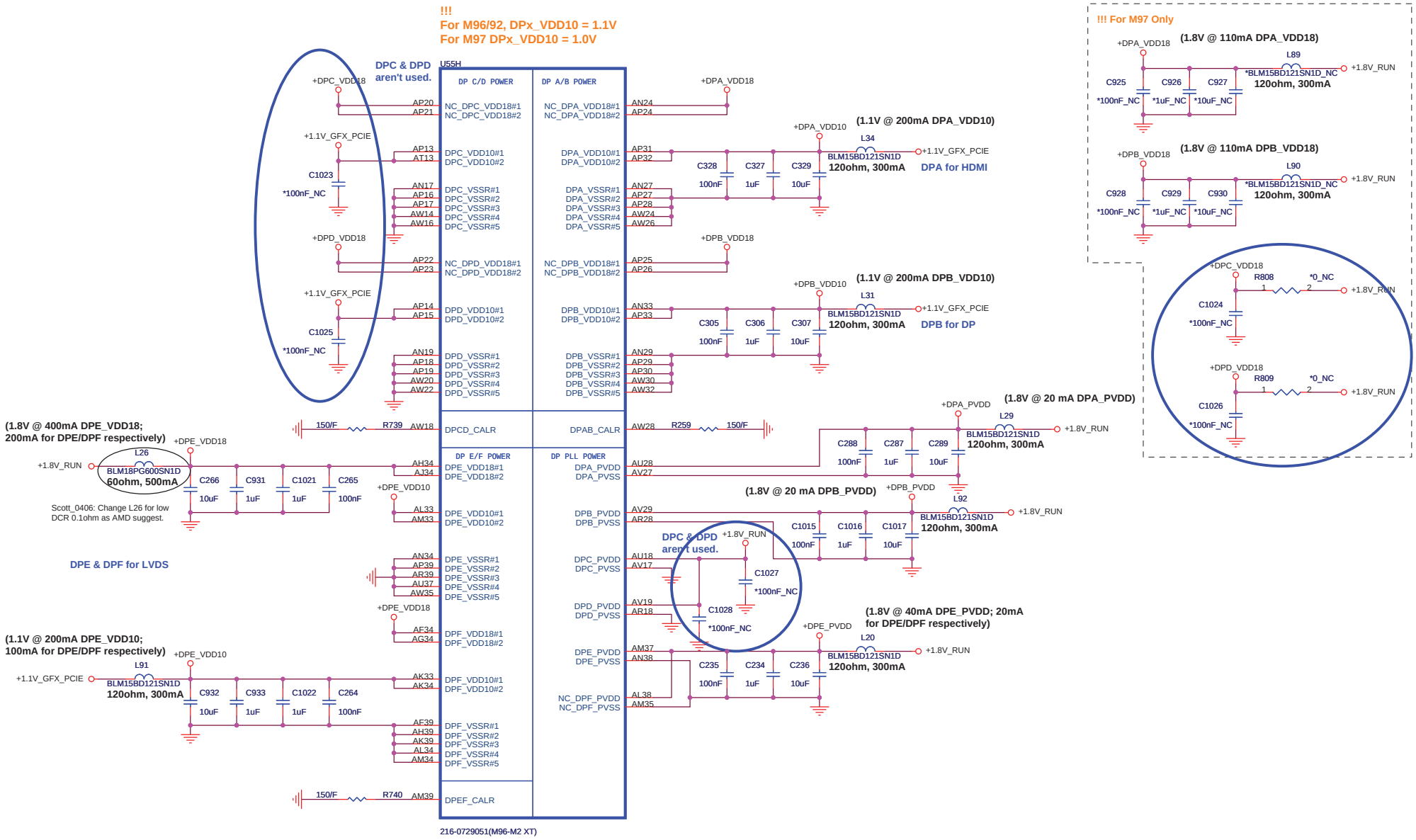

QUANTA COMPUTER

Title	M97LP_DP POWER	
Size	Document Number RM3	Rev 3A
Date	Wednesday, May 06, 2009	Sheet 21 of 60

http://laptop-motherboard-schematic.blogspot.com/

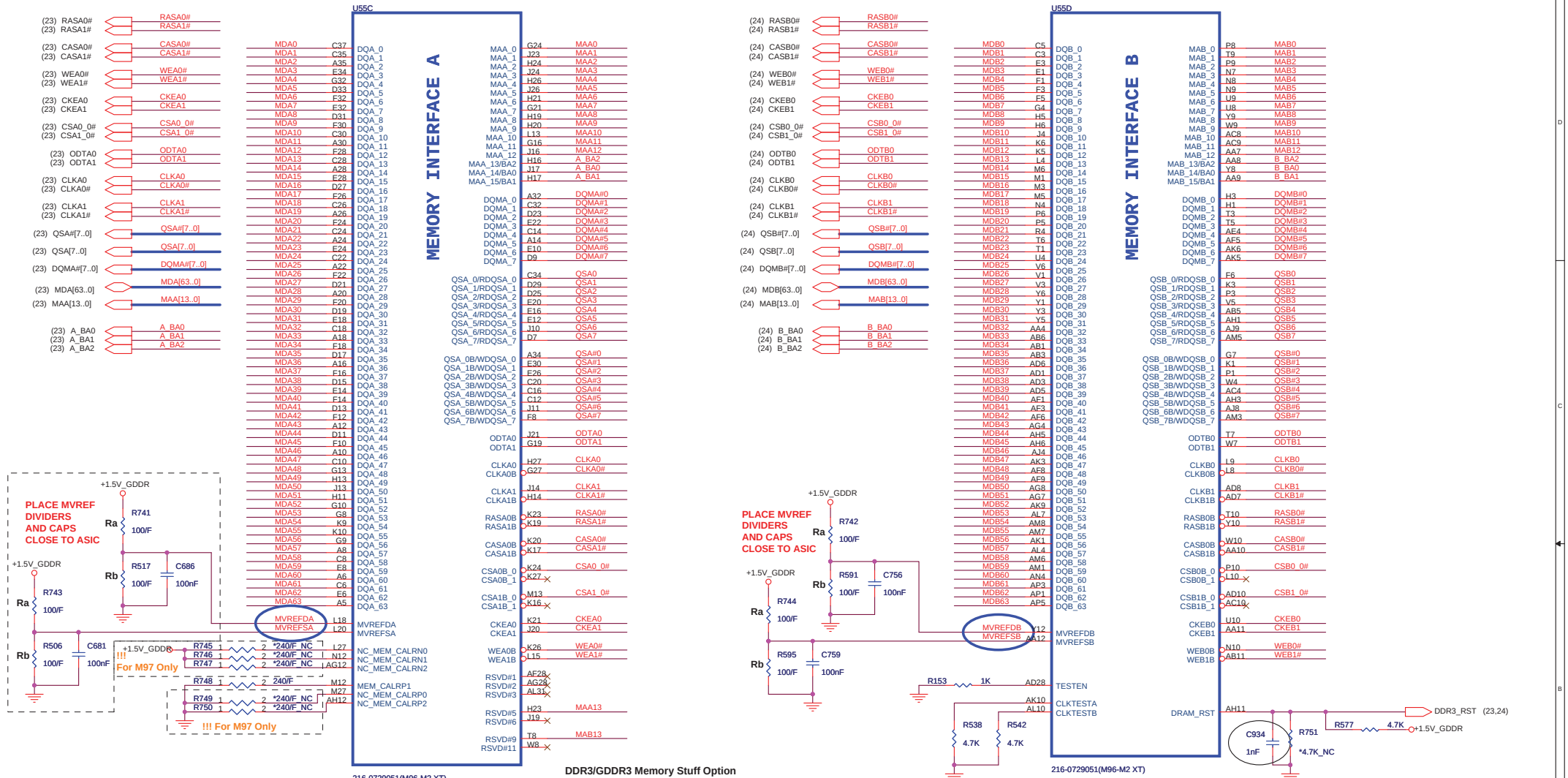

DDR3/GDDR3 Memory Stuff Option

	GDDR3	DDR3
MVDDQ	1.8V	1.5V
Ra	40.2R	100R
Rb	100R	100R

THERMAL MONITOR

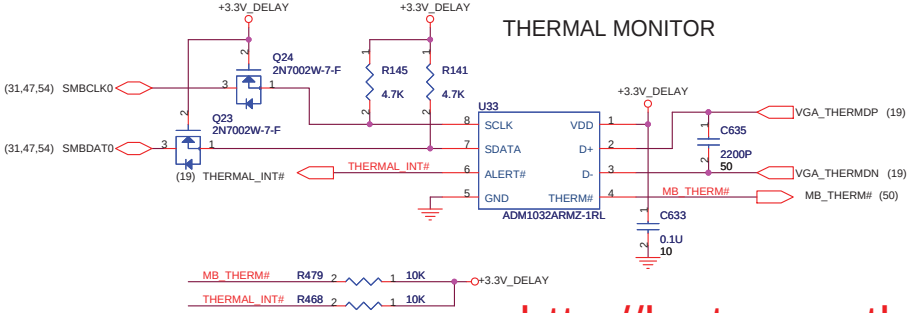

Spread Spectrum

If U7070, the discrete spread spectrum chip is not used, then pop R8328 in order to pull-down BXTALOUT for EMI reasons.

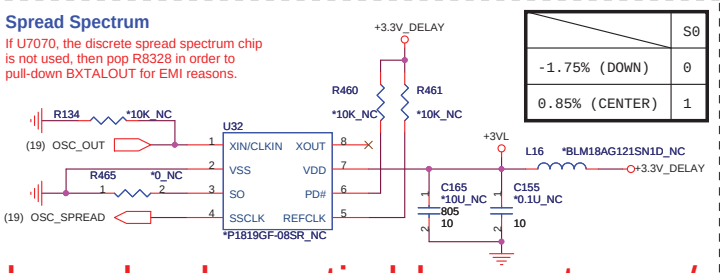

	S0
-1.75% (DOWN)	0
0.85% (CENTER)	1

QUANTA COMPUTER

Title	M97LP_MEMORY/THERM
Size	Document Number RM3
Rev	3A
Date:	Wednesday, May 06, 2009
Sheet	22 of 60

http://laptop-motherboard-schematic.blogspot.com/

DDR3 64MX16, CH A : 512MB

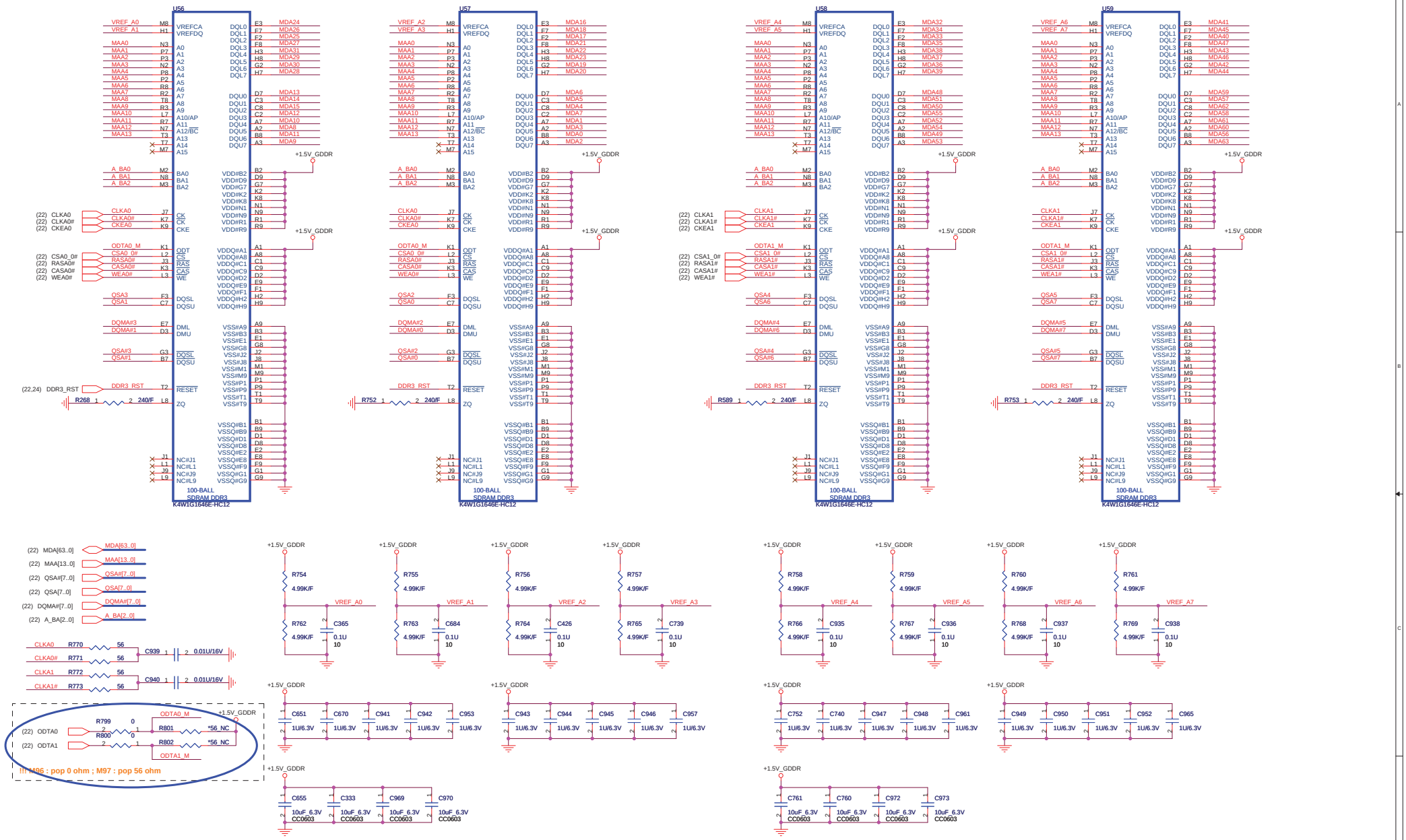

QUANTA COMPUTER

Title	M97LP_DDR3_A_512M	
Size	Document Number RM3	Rev 3A
Date: Wednesday, May 06, 2009	Sheet 23 of 60	

http://laptop-motherboard-schematic.blogspot.com/

DDR3 64MX16, CH B : 512MB

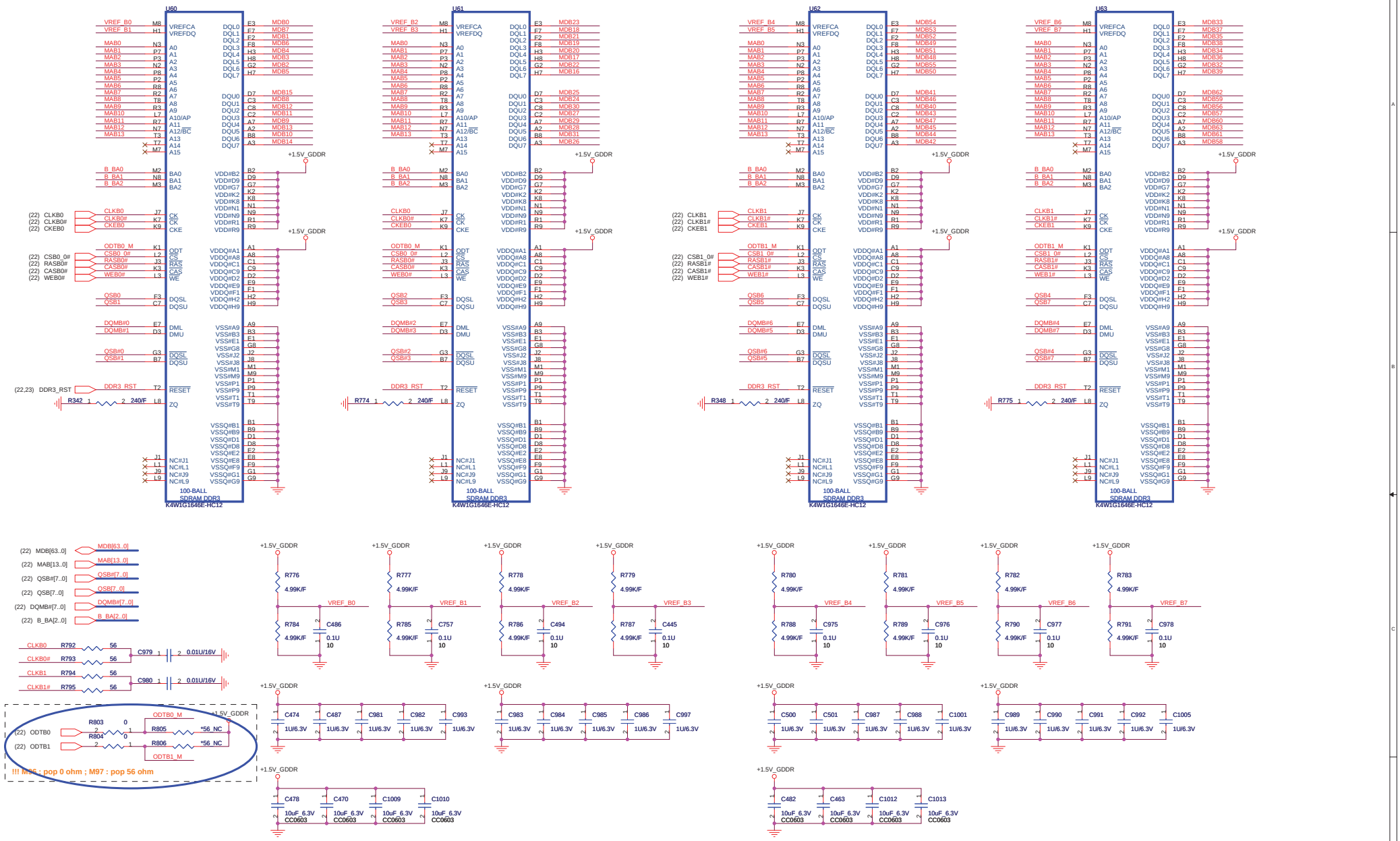

QUANTA COMPUTER

Title	M97LP_DDR3_B_512M	
Size	Document Number RM3	Rev 3A
Date: Wednesday, May 06, 2009	Sheet 24 of 60	

http://laptop-motherboard-schematic.blogspot.com/

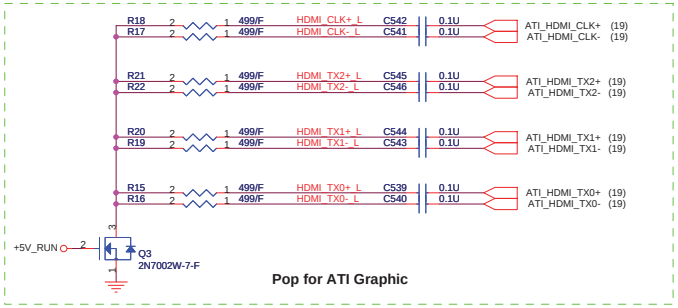

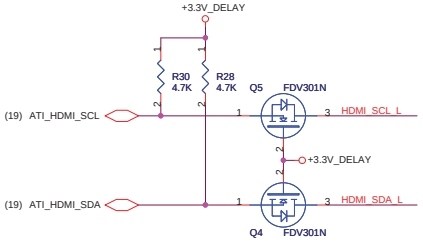

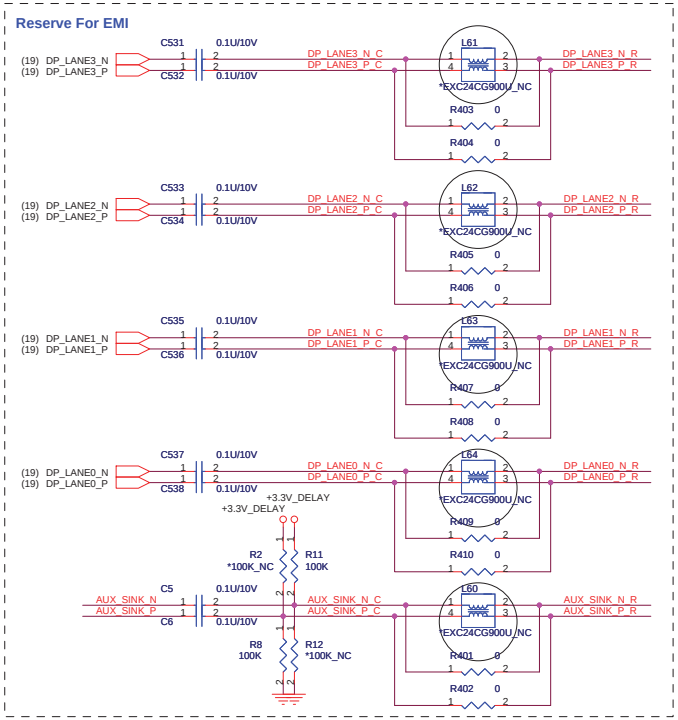

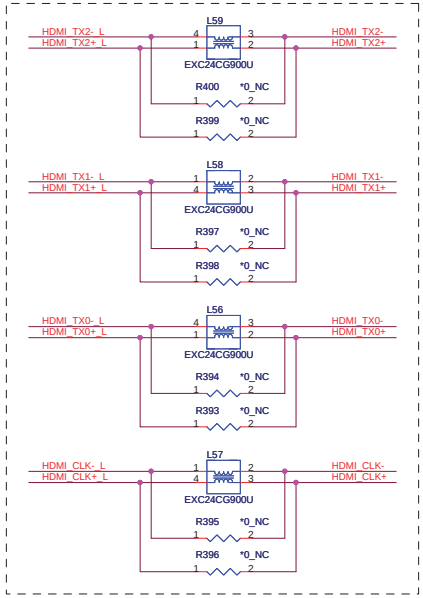

Delete EMI ESD IC for EMI asked HDMI signals link to CONN directly.

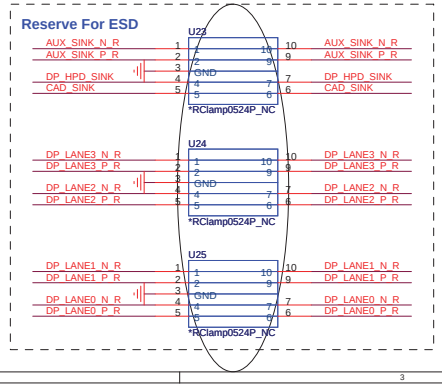

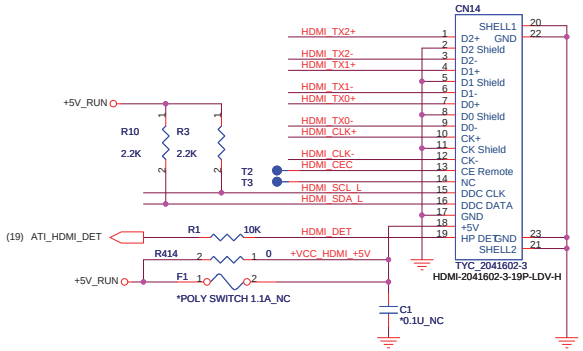

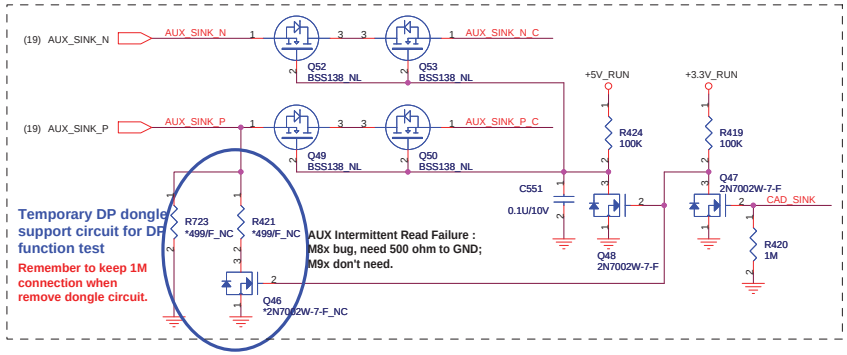

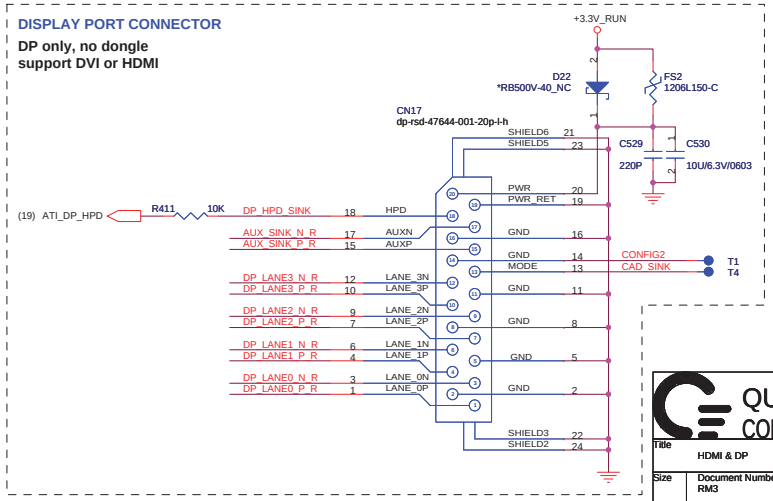

QUANTA COMPUTER

Title	HDMI & DP	
Size	Document Number RM3	Rev 3A
Date: Wednesday, May 06, 2009	Sheet 25 of 60	

http://laptop-motherboard-schematic.blogspot.com/

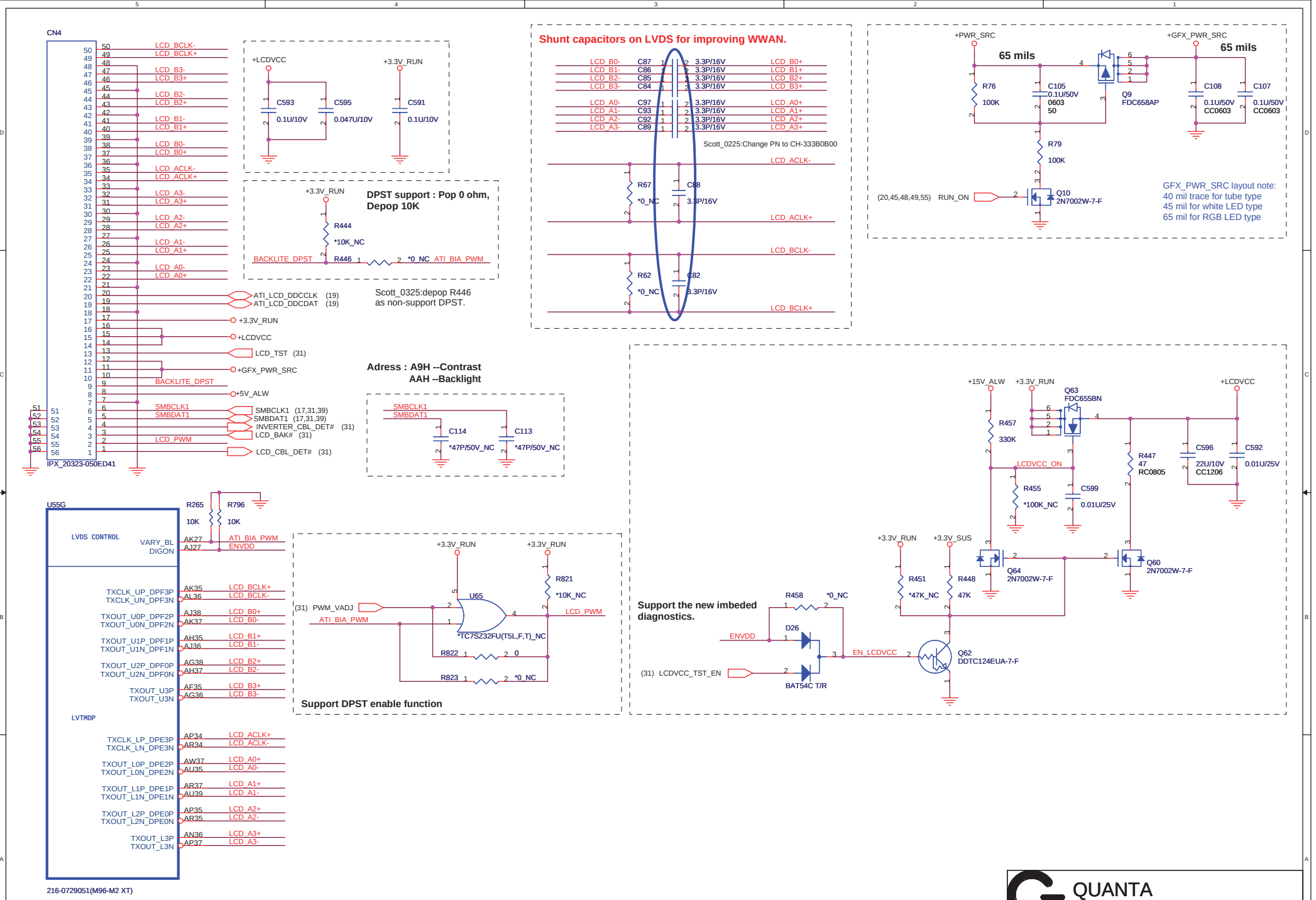

http://laptop-motherboard-schematic.blogspot.com/

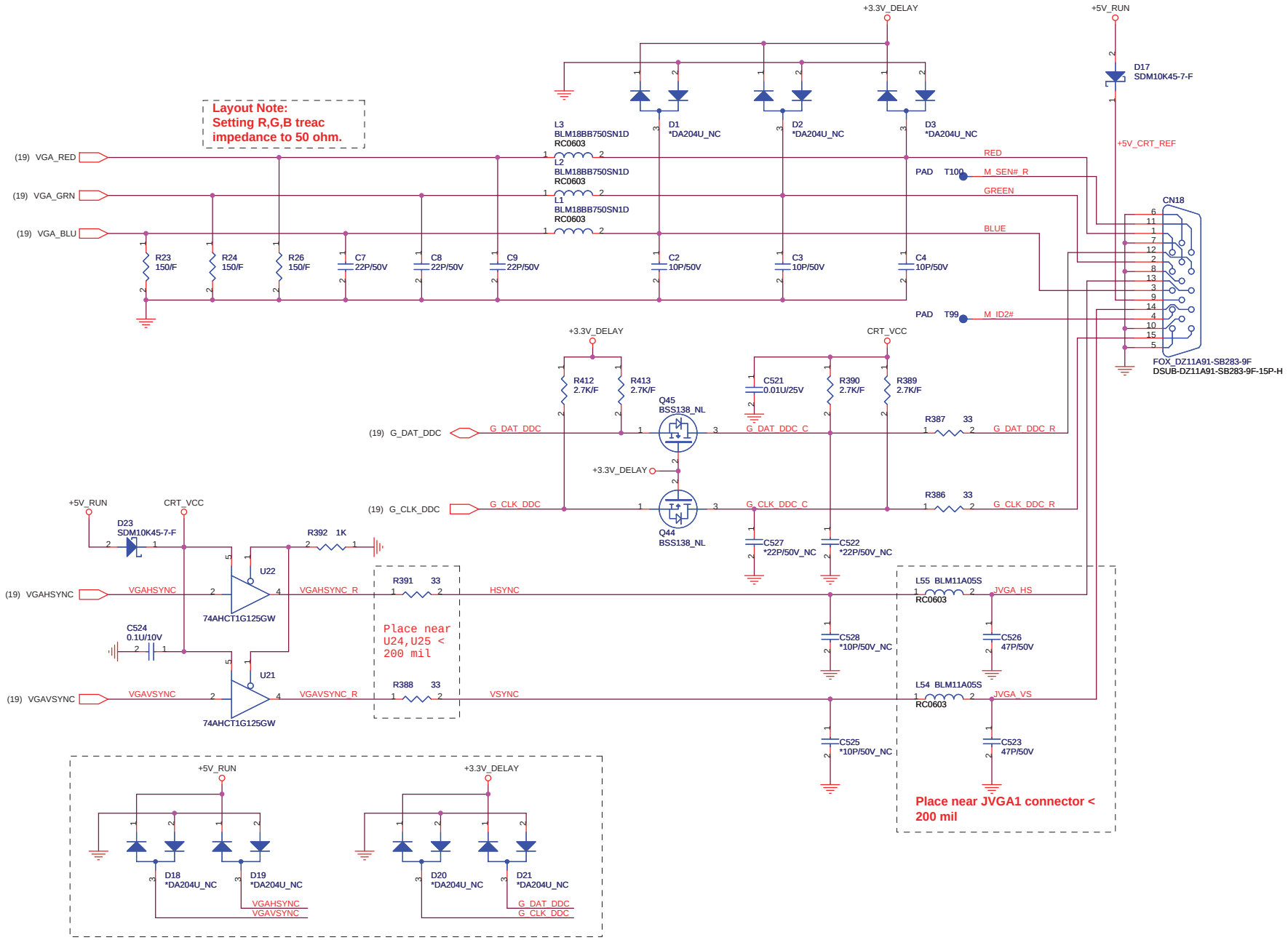

QUANTA COMPUTER

Title	CRT CONN	
Size	Document Number RM3	Rev 3A
Date: Wednesday, May 06, 2009	Sheet 27 of 60	

http://laptop-motherboard-schematic.blogspot.com/

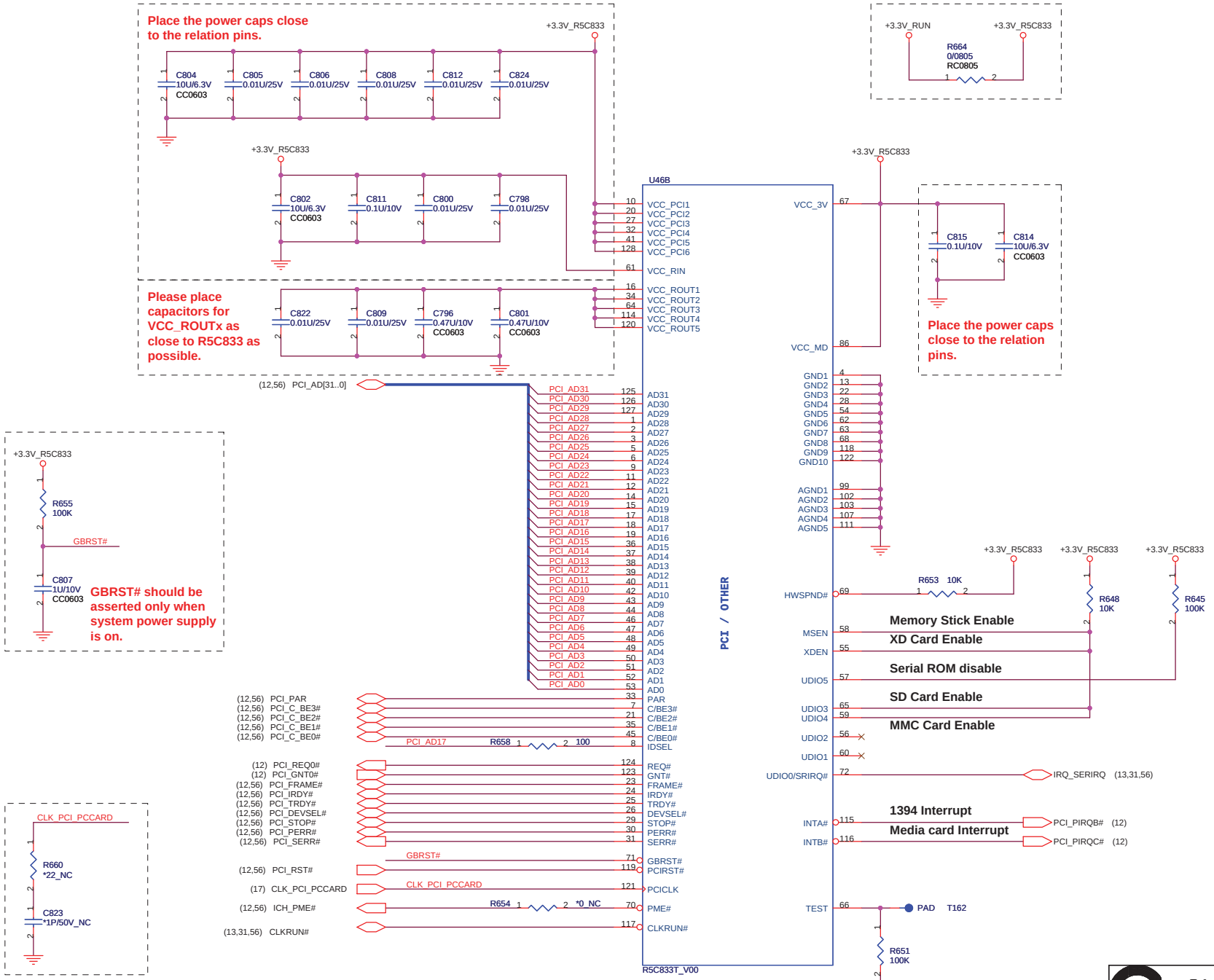

QUANTA COMPUTER

Title	CardReader (5C833)	
Size	Document Number RM3	Rev 3A
Date	Wednesday, May 06, 2009	Sheet 28 of 60

http://laptop-motherboard-schematic.blogspot.com/

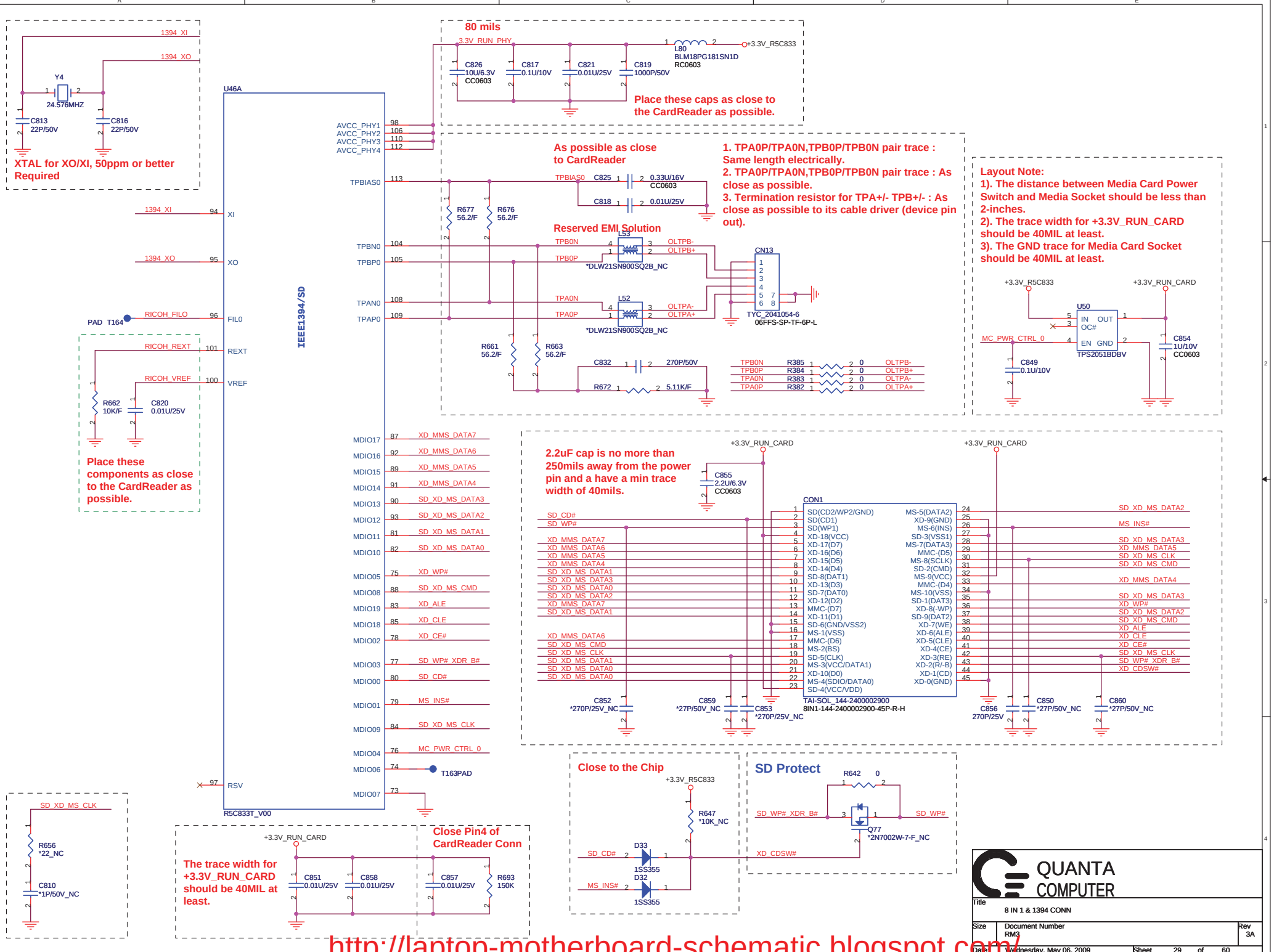

http://laptop-motherboard-schematic.blogspot.com/

Express Card

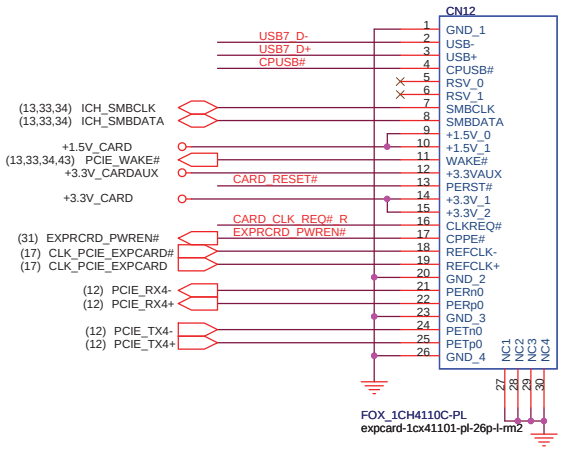

+1.5V_CARD Max. 650mA, Average 500mA.
+3V_CARD Max. 1300mA, Average 1000mA.

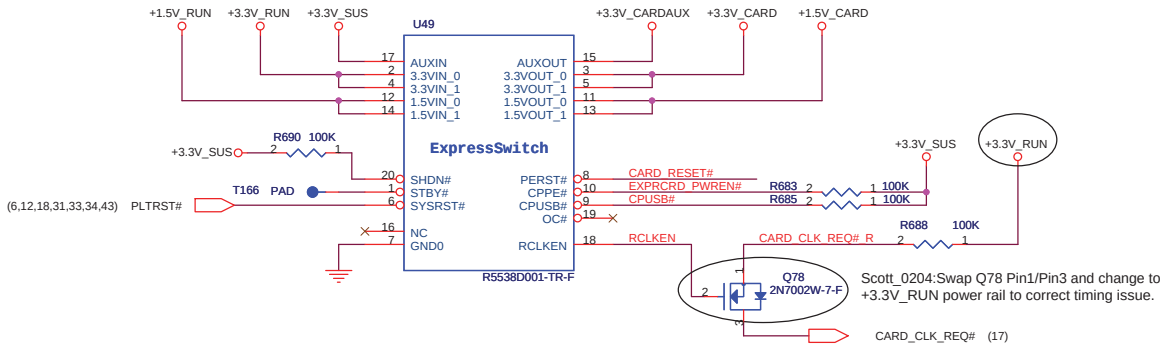

Scott_0204:Swap Q78 Pin1/Pin3 and change to +3.3V_RUN power rail to correct timing issue.

PCI-Express TX and RX direct to connector.

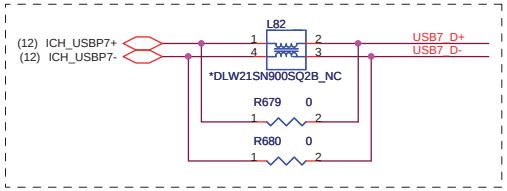

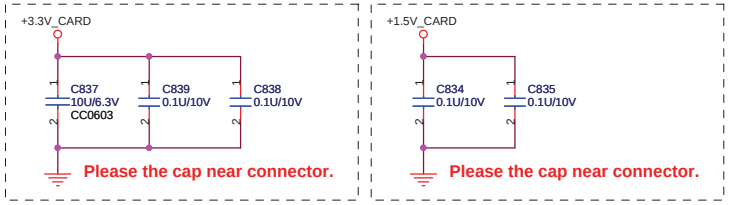

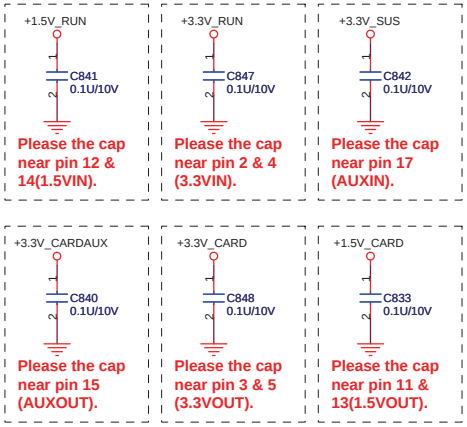

QUANTA COMPUTER

Title	EXPRESS CARD	
Size	Document Number RM3	Rev 3A
Date	Wednesday, May 06, 2009	Sheet 30 of 60

http://laptop-motherboard-schematic.blogspot.com/

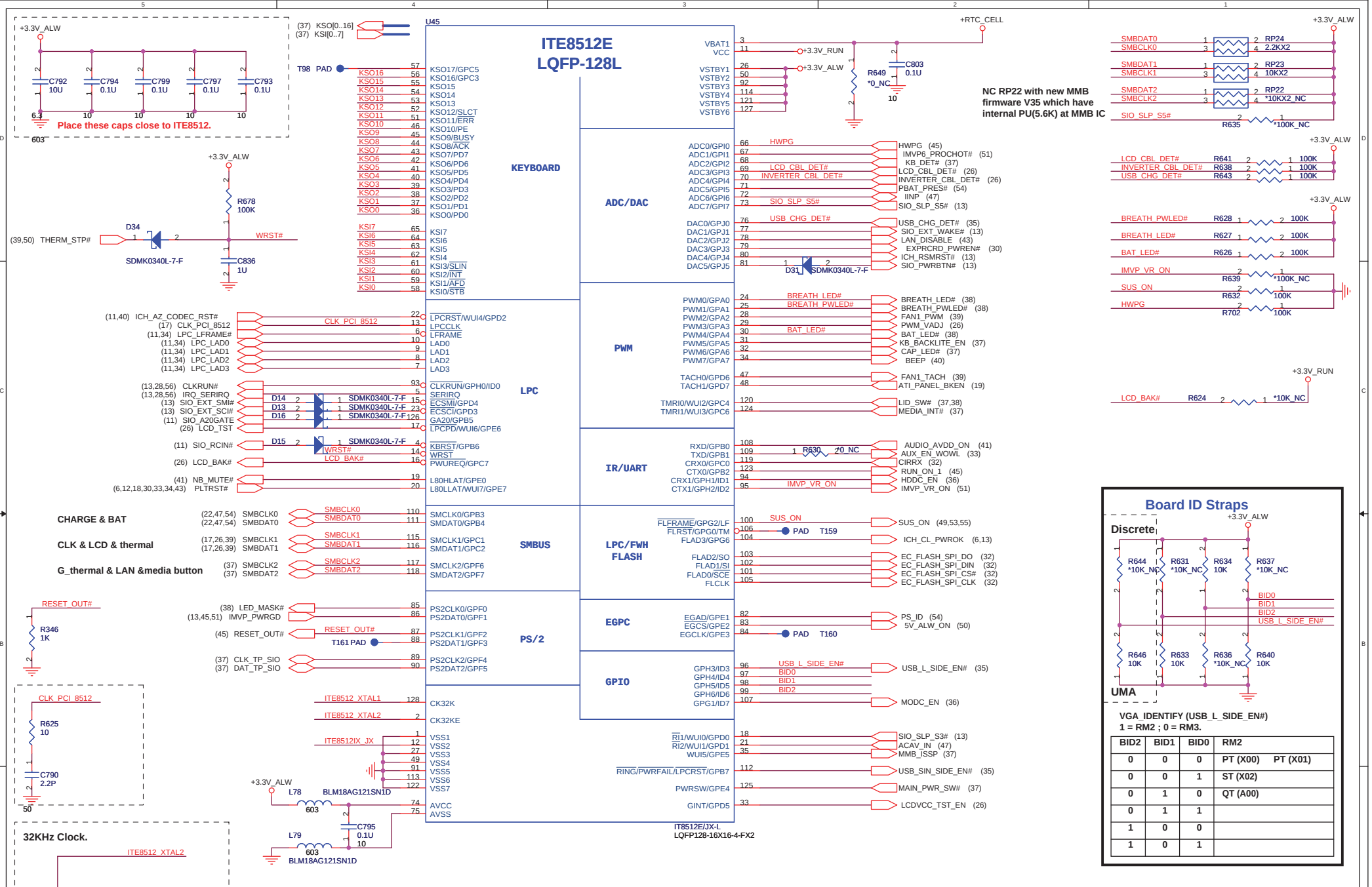

http://laptop-motherboard-schematic.blogspot.com/

16Mbit (2M Byte), SPI

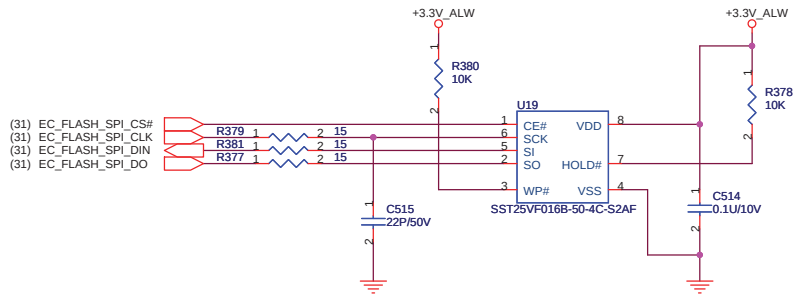

RTC BATTERY

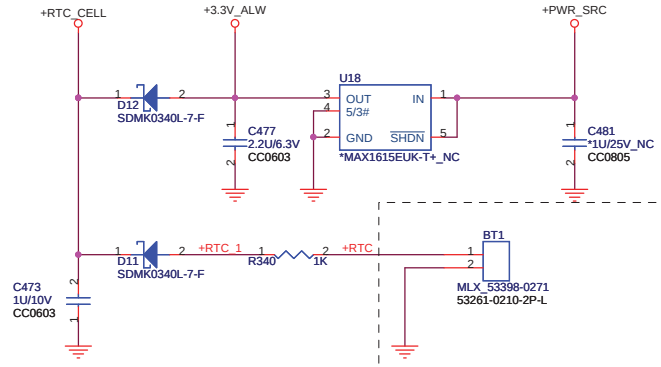

Consumer IR

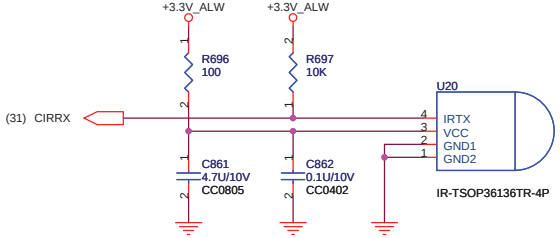

QUANTA COMPUTER

Title	FLASH/ RTC/ CIR
Size	Document Number RM3
Rev	3A
Date	Wednesday, May 06, 2009
Sheet	32 of 60

http://laptop-motherboard-schematic.blogspot.com/

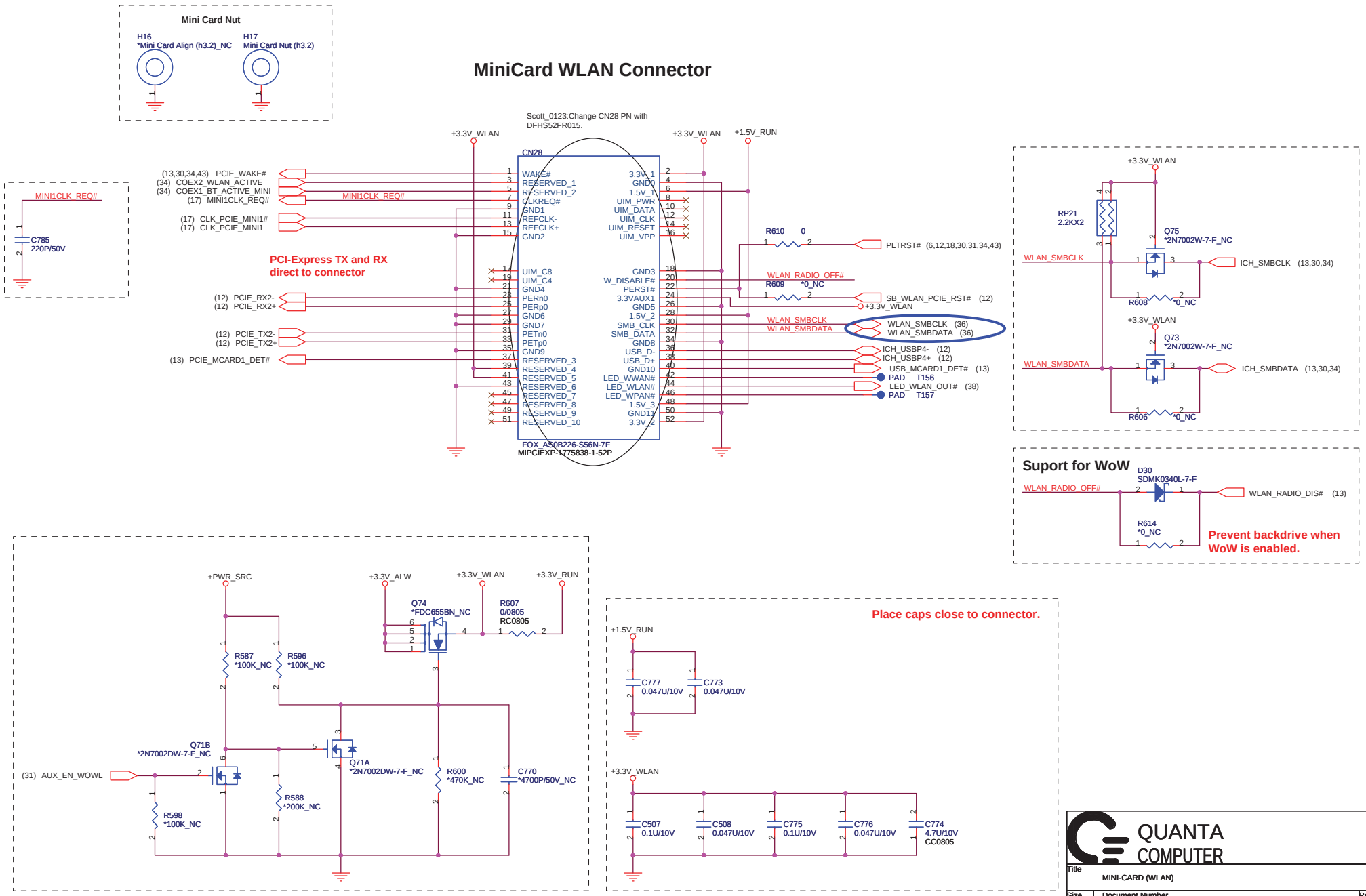

http://laptop-motherboard-schematic.blogspot.com/

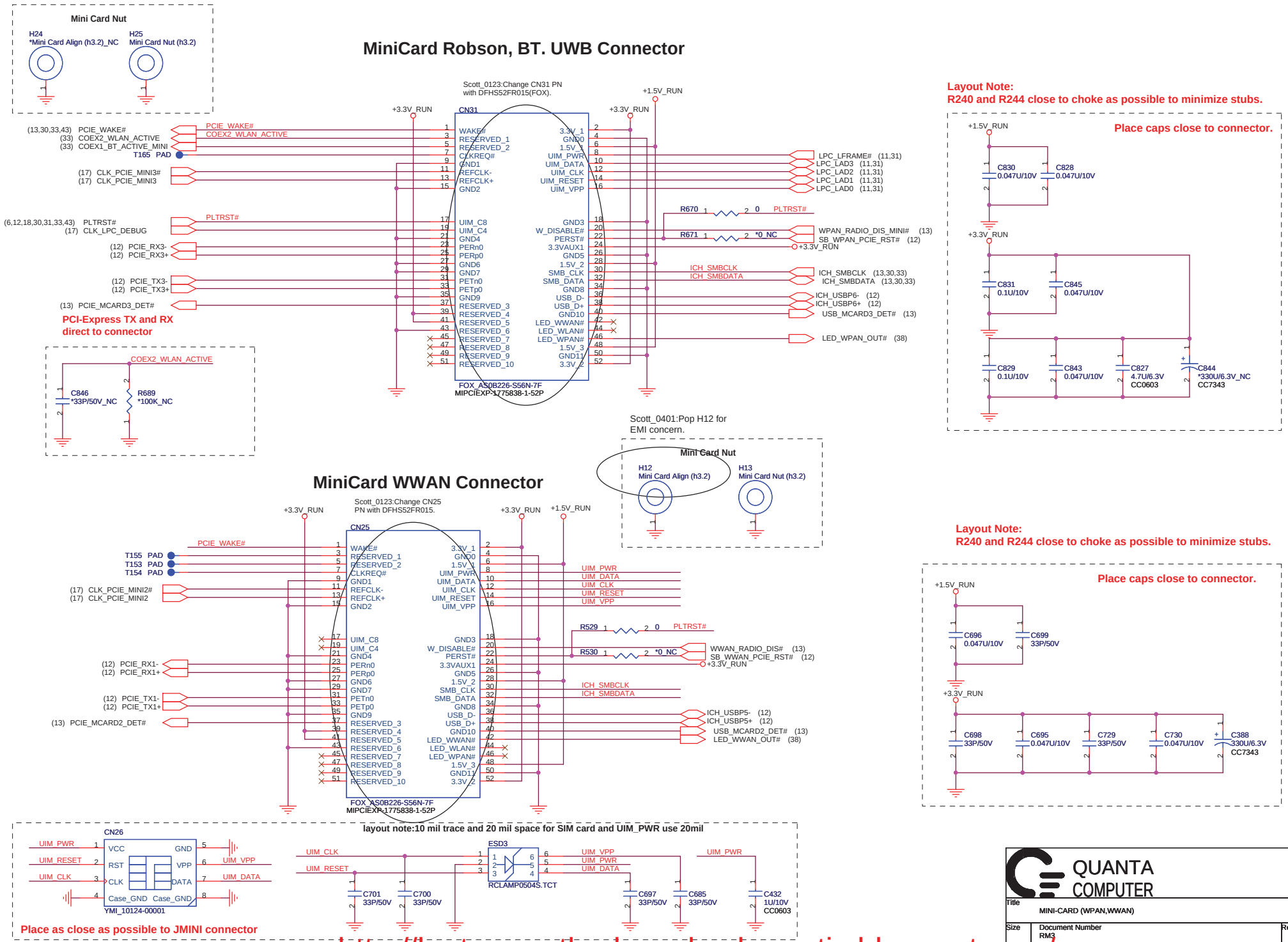

http://laptop-motherboard-schematic.blogspot.com/

eSATA Re-driver IC

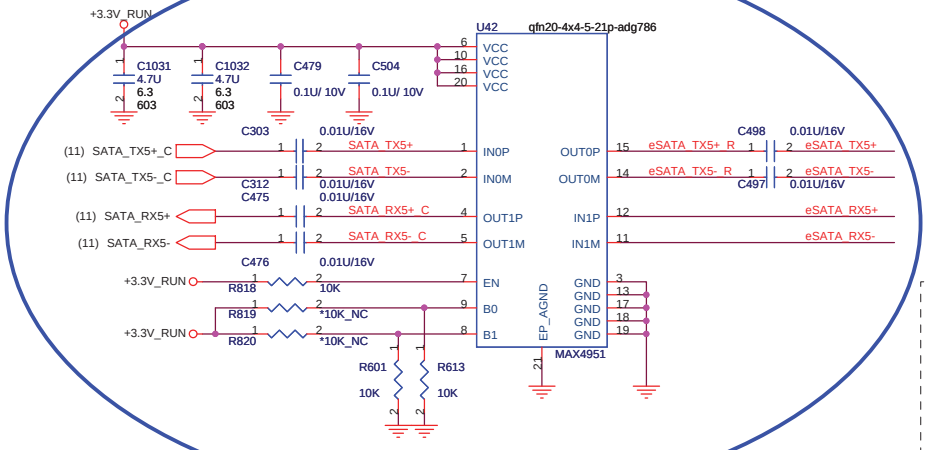

EN	B0	B1	FUNCTION
0	X	X	Standby
1	0	0	Standard SATA Output
1	1	0	Ch 0 Boost Output
1	0	1	Ch 1 Boost Output
1	1	1	Ch 0,1 Boost Output

USB BUS SW

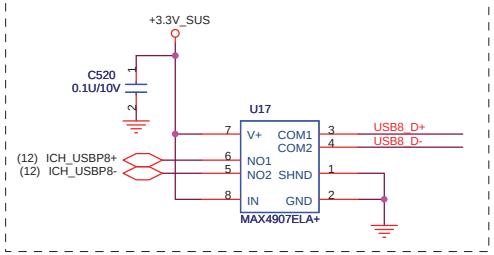

eSATA CONN

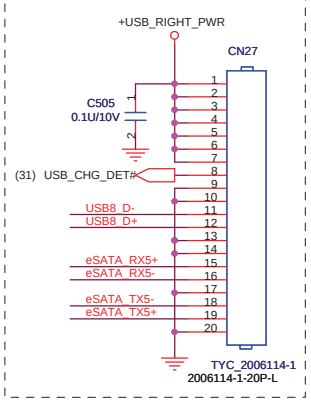

USB POWER SW

Each channel is 1A

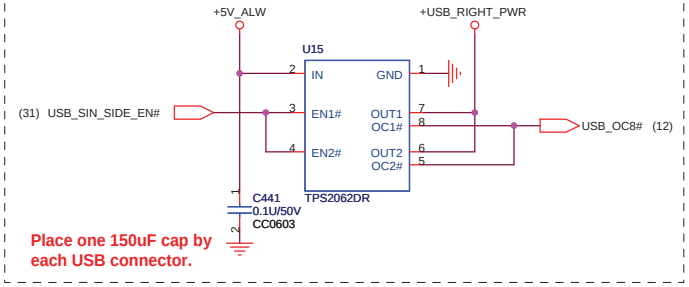

Place one 150uF cap by each USB connector.

USB POWER SW

Each channel is 1A

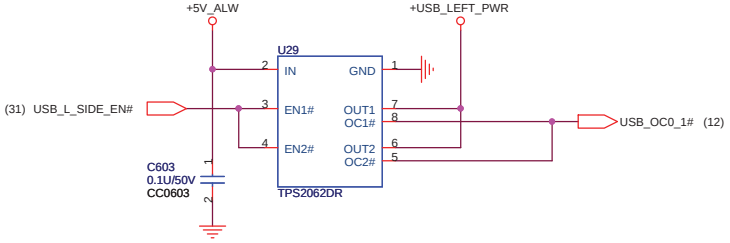

TV module

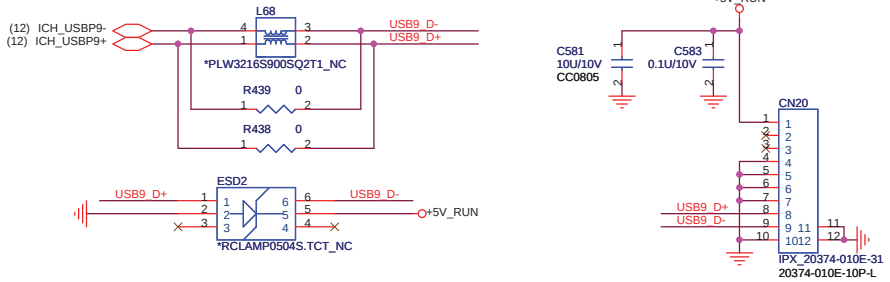

TV RF Jack & Microwave connector

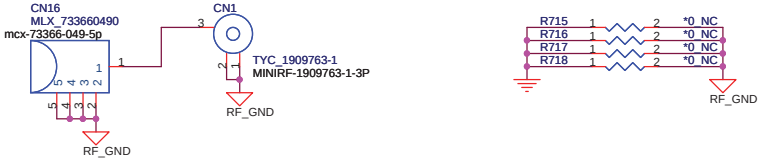

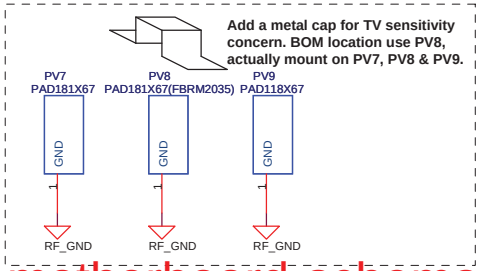

QUANTA COMPUTER

Title	USB & eSATA & TV	
Size	Document Number RM3	Rev 3A
Date	Wednesday, May 06, 2009	Sheet 35 of 60

http://laptop-motherboard-schematic.blogspot.com/

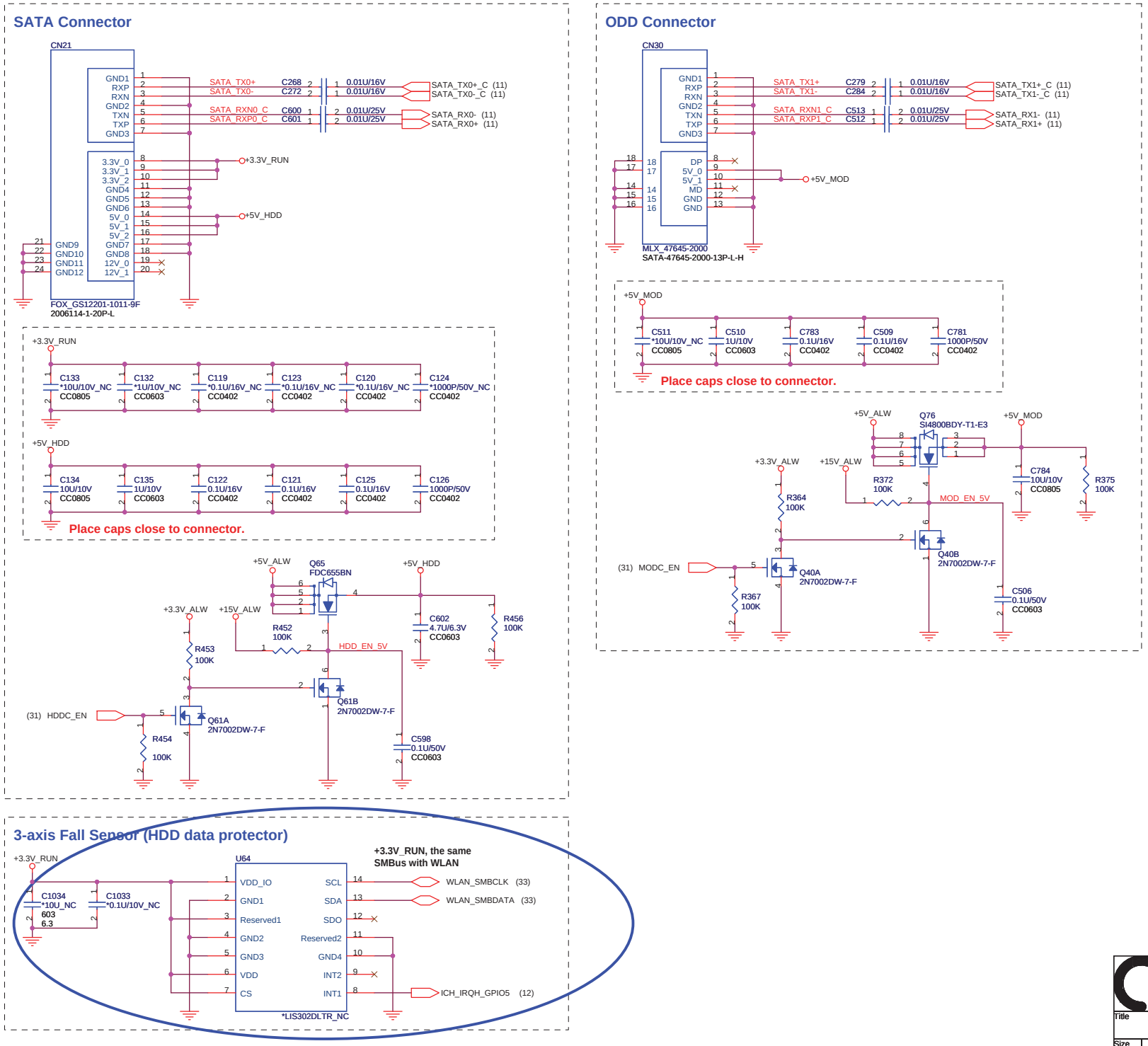

QUANTA COMPUTER

Title	HDD & ODD (SATA)	
Size	Document Number RM3	Rev 3A
Date	Wednesday, May 06, 2009	Sheet 36 of 60

http://laptop-motherboard-schematic.blogspot.com/

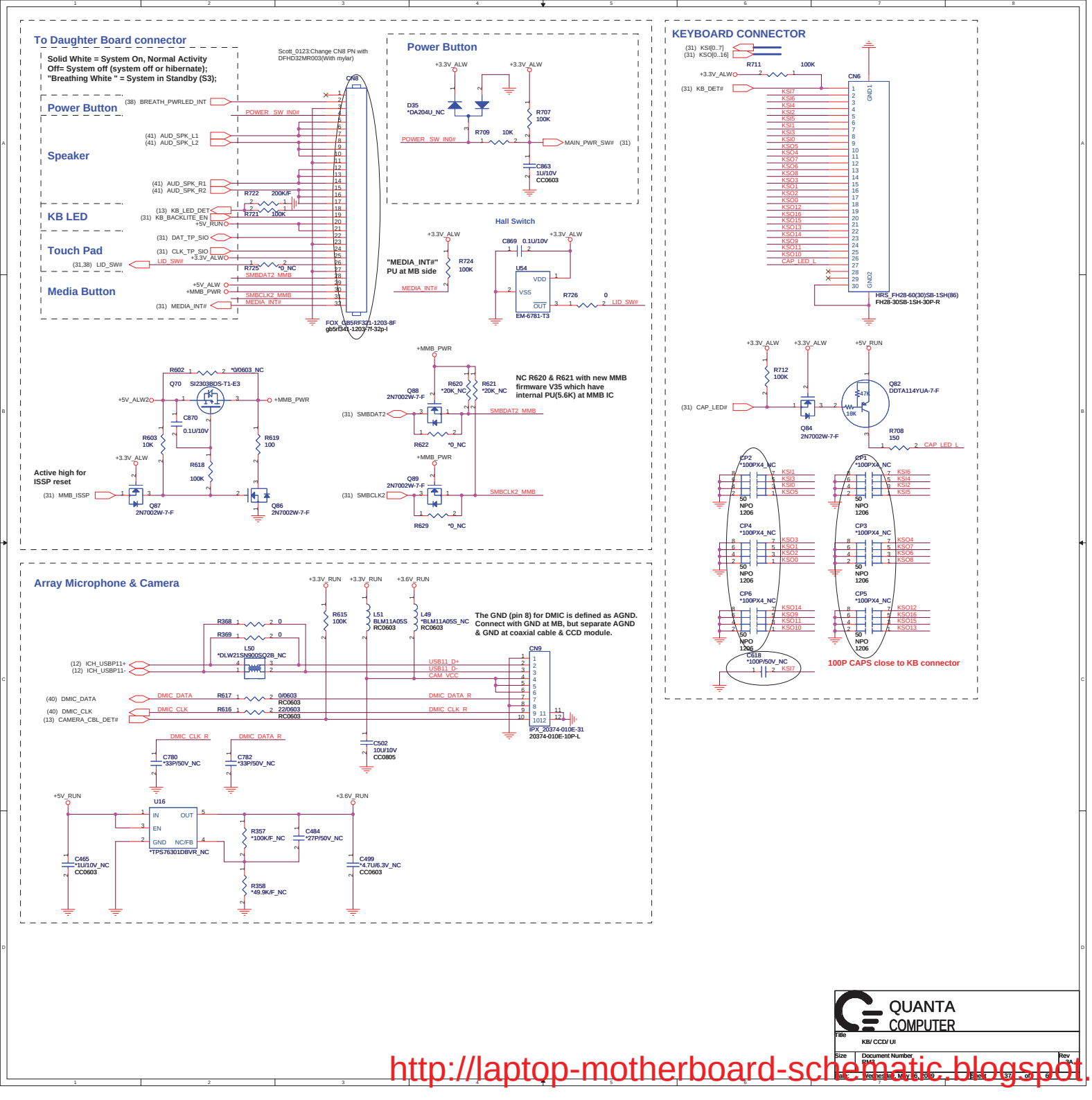

http://laptop-motherboard-schematic.blogspot.com/

Hinge & Power Button board LED (PWR/Battery indictor)

Hinge LED
Solid White= System On, Normal Activity
Solid White= Charging (system on);
Solid White= Charging (system off or hibernate and battery charge <90%);
Off= Charging (system off or hibernate and battery charge > 90%) ;
"Breathing White " = System in Standby (S3);
Off = System Off (or in Hibernate);

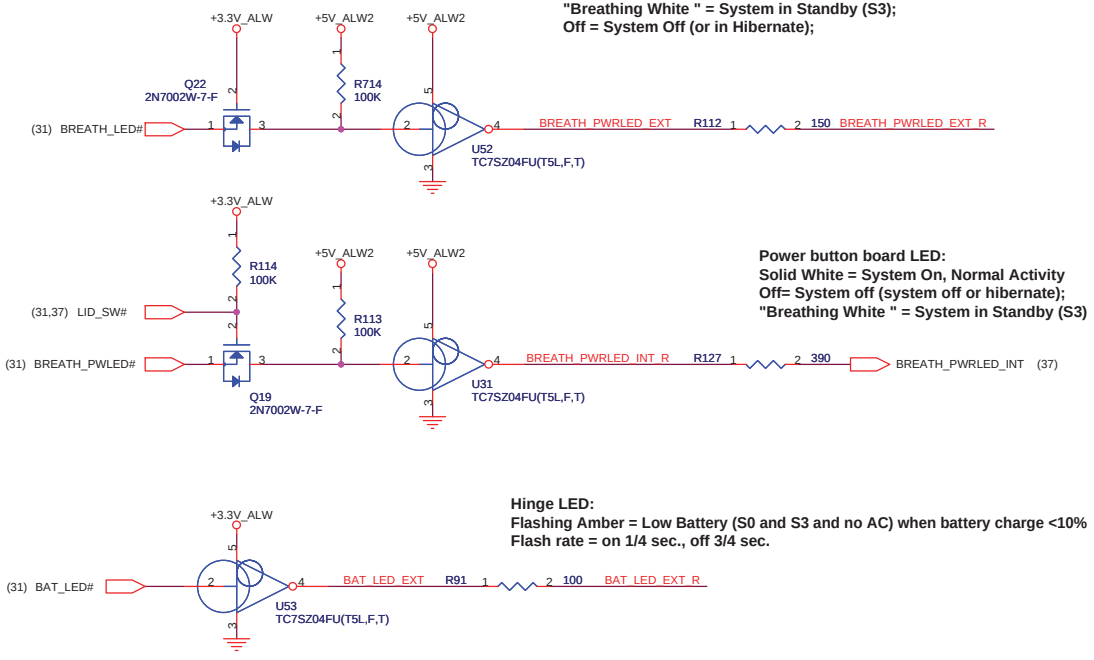

Power button board LED:
Solid White = System On, Normal Activity
Off= System off (system off or hibernate);
"Breathing White " = System in Standby (S3)

Hinge LED:
Flashing Amber = Low Battery (S0 and S3 and no AC) when battery charge <10%
Flash rate = on 1/4 sec., off 3/4 sec.

Hinge LED (PWR/Battery indictor)

L-C filter (reserve R-C) for EMI

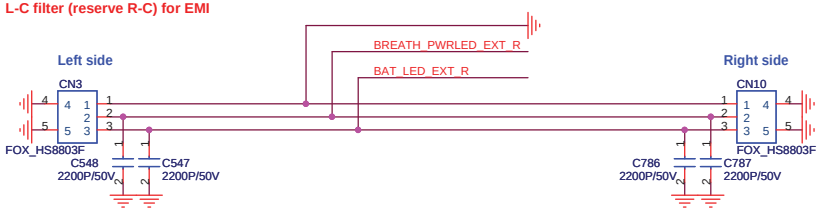

HDD Activity LED

Flicker with HDD activity.

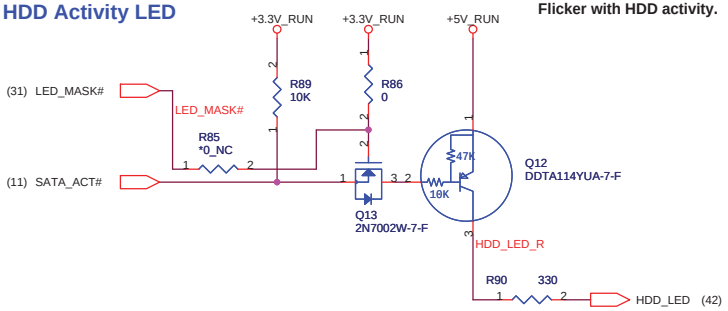

WLAN

Turns On when WiFi radio is on.

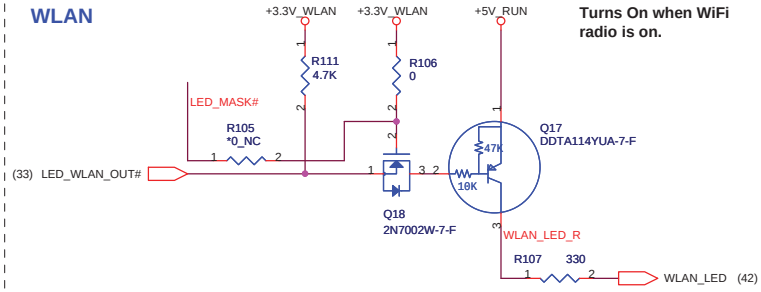

BT / UWB LED

Turns On when Bluetooth radio is on.

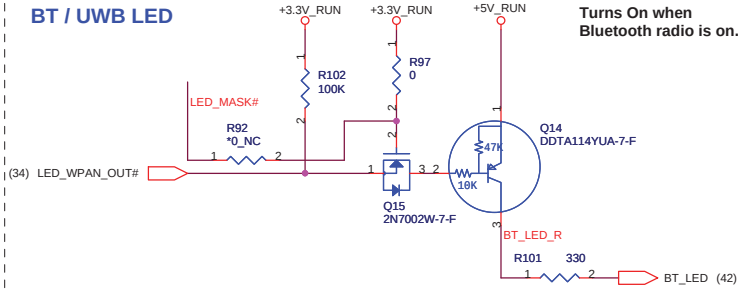

WWAN

Turns On when WWAN radio is on.

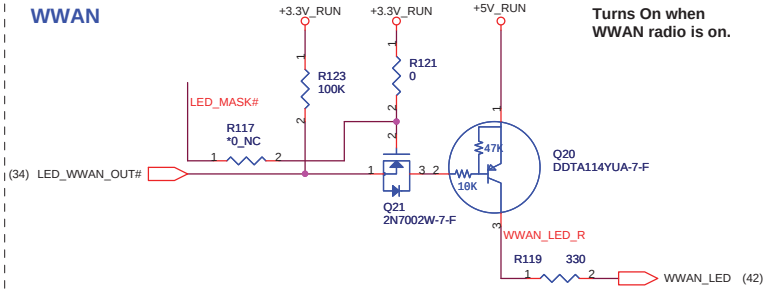

Solid White= System On, Normal Activity
Solid White= Charging (system on);
Solid White= Charging (system off or hibernate and battery charge <90%);
Off= Charging (system off or hibernate and battery charge > 90%);
"Breathing White " = System in Standby (S3);
Off = System Off (or in Hibernate);

Flashing Amber = Low Battery (S0 and S3 and no AC) when battery charge <10%
Flash rate = on 1/4 sec., off 3/4 sec.

QUANTA COMPUTER

Title	LED	
Size	Document Number RM3	Rev 3A
Date: Wednesday, May 06, 2009	Sheet 38 of 60	

http://laptop-motherboard-schematic.blogspot.com/

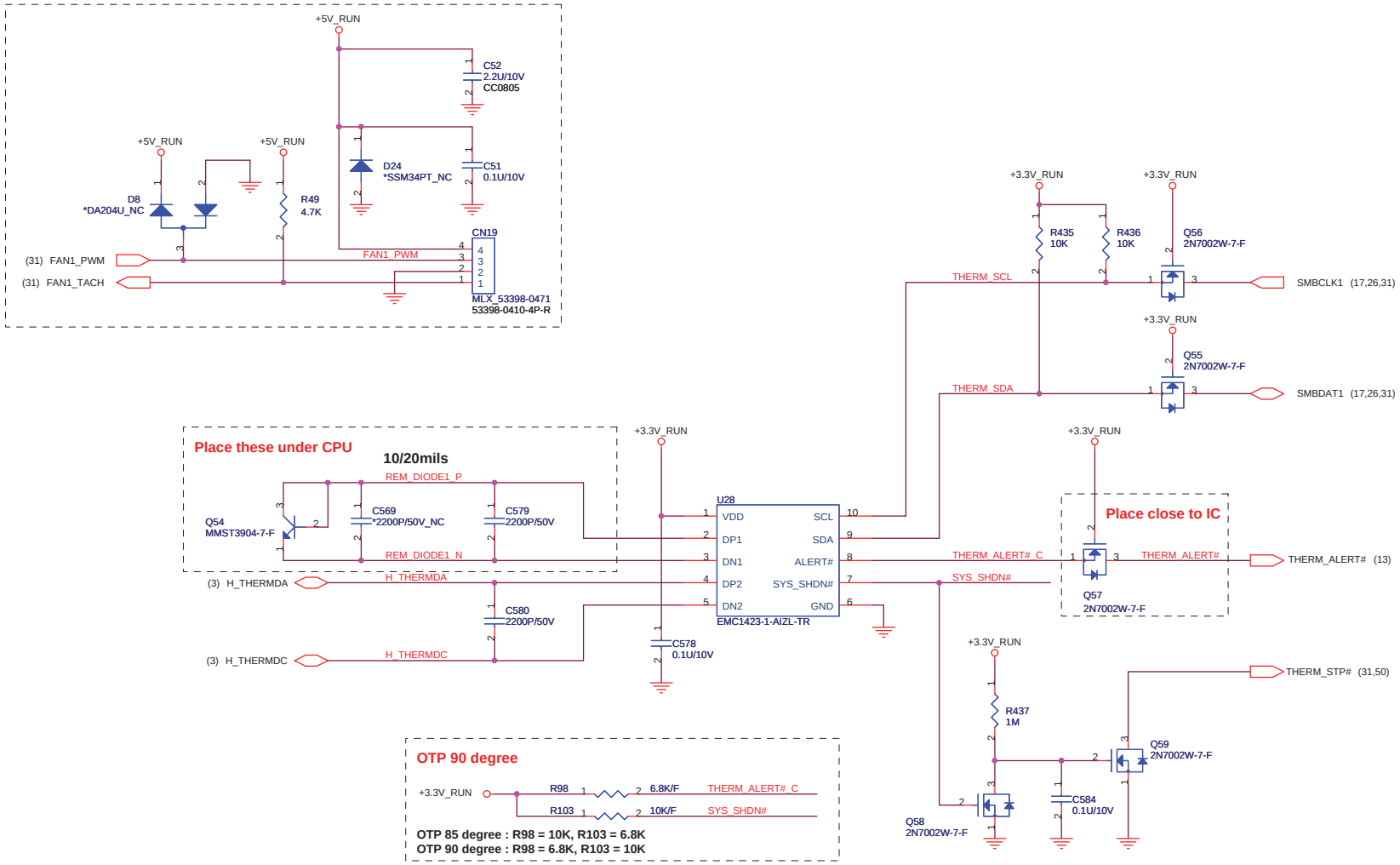

QUANTA COMPUTER

Title	FAN /THERMAL	
Size	Document Number RM3	Rev 3A
Date	Wednesday, May 06, 2009	Sheet 39 of 60

http://laptop-motherboard-schematic.blogspot.com/

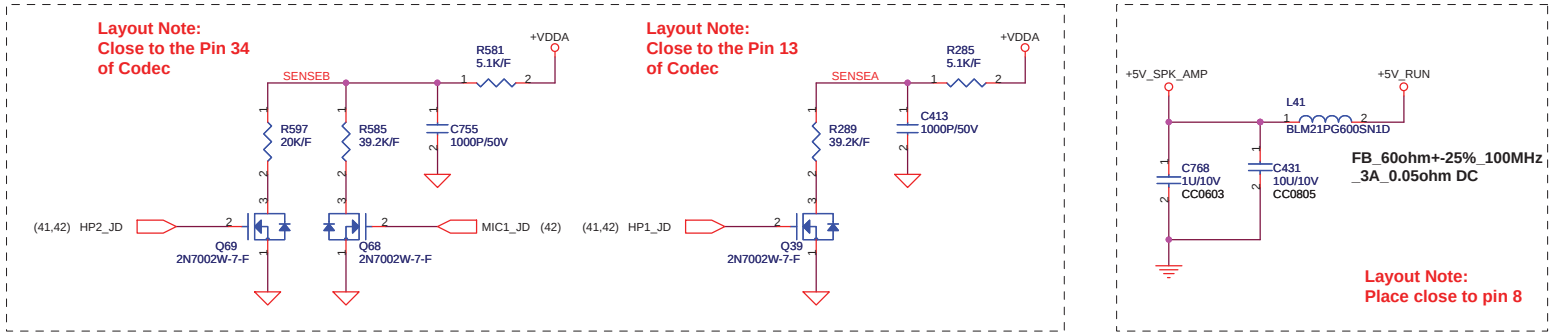

AZALIA (HD) CODEC

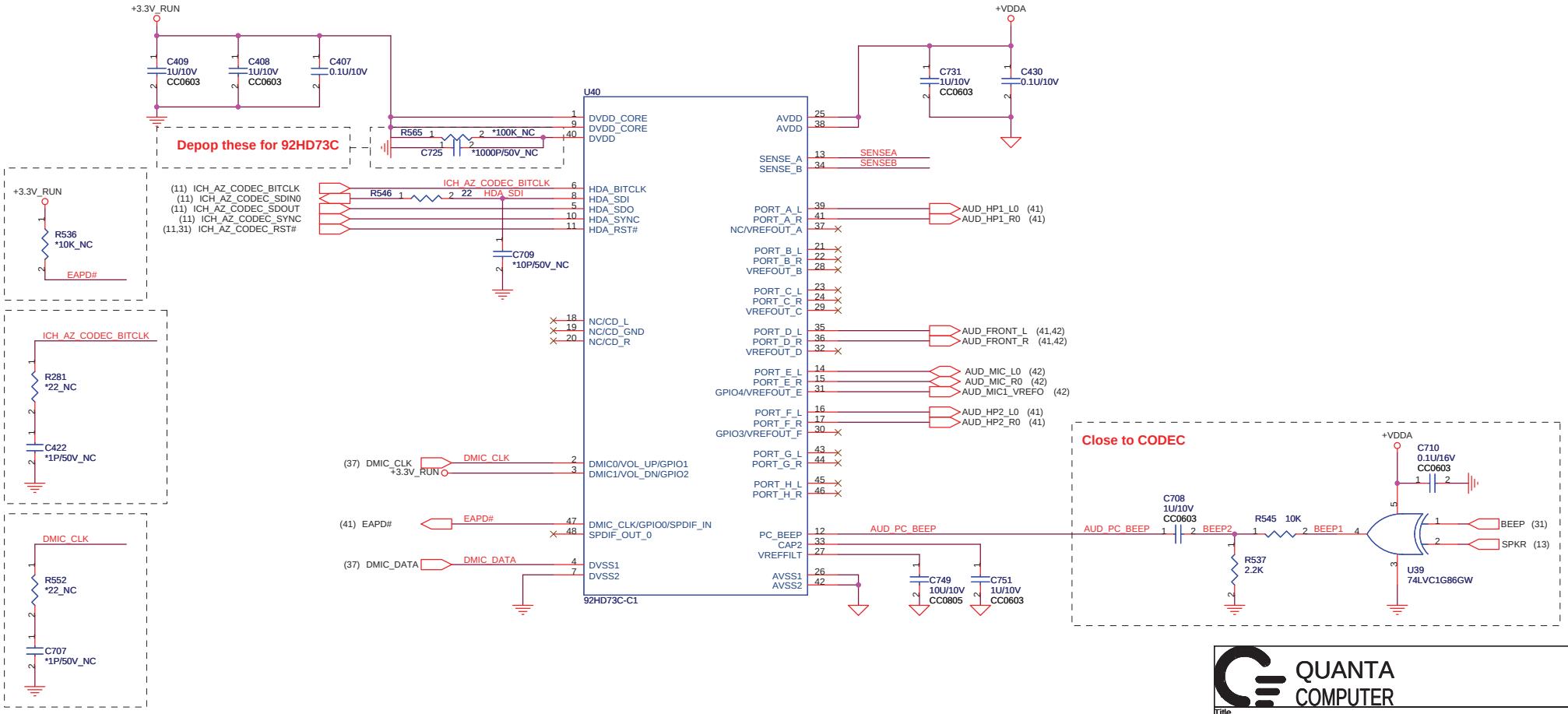

QUANTA COMPUTER

Title	AZELIA CODEC (92HD73C)	
Size	Document Number RM3	Rev 3A
Date: Wednesday, May 06, 2009	Sheet 40 of 60	

http://laptop-motherboard-schematic.blogspot.com/

INTERNAL SPEAKER AMP

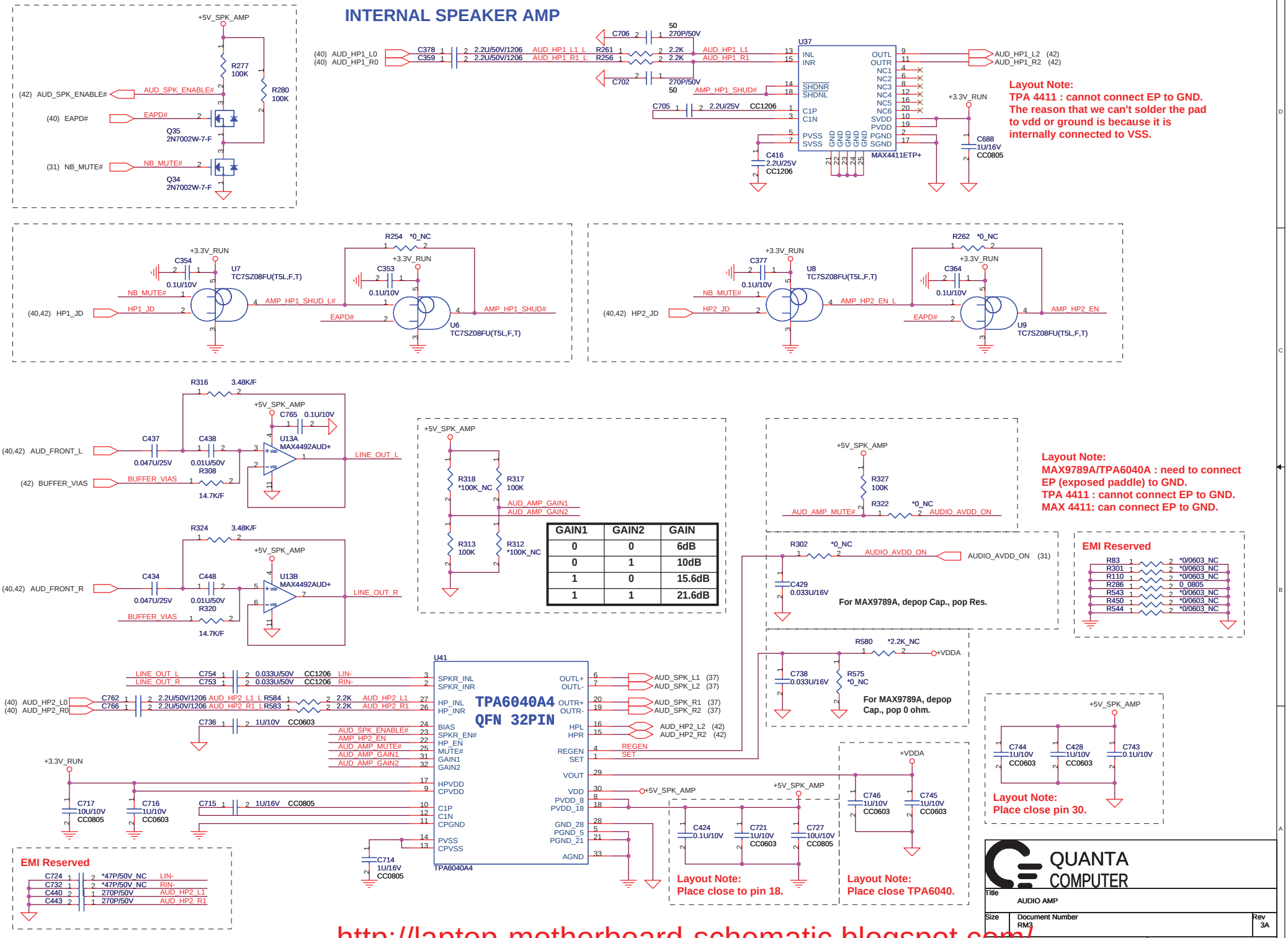

GAIN1	GAIN2	GAIN
0	0	6dB
0	1	10dB
1	0	15.6dB
1	1	21.6dB

QUANTA COMPUTER

Title: AUDIO AMP

Size | Document Number: RM3 | Rev: 3A

Date: Wednesday, May 06, 2009 | Sheet 41 of 60

http://laptop-motherboard-schematic.blogspot.com/

INTERNAL SUBWOOFER AMP

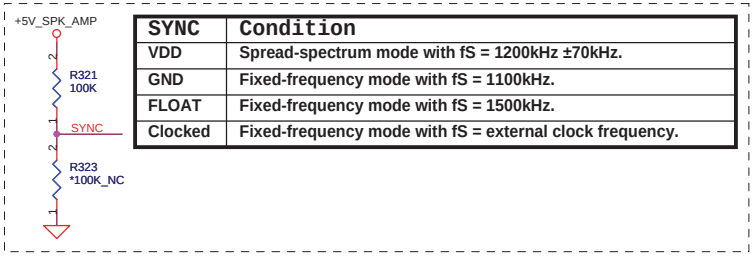

SYNC	Condition
VDD	Spread-spectrum mode with fS = 1200kHz ±70kHz.
GND	Fixed-frequency mode with fS = 1100kHz.
FLOAT	Fixed-frequency mode with fS = 1500kHz.
Clocked	Fixed-frequency mode with fS = external clock frequency.

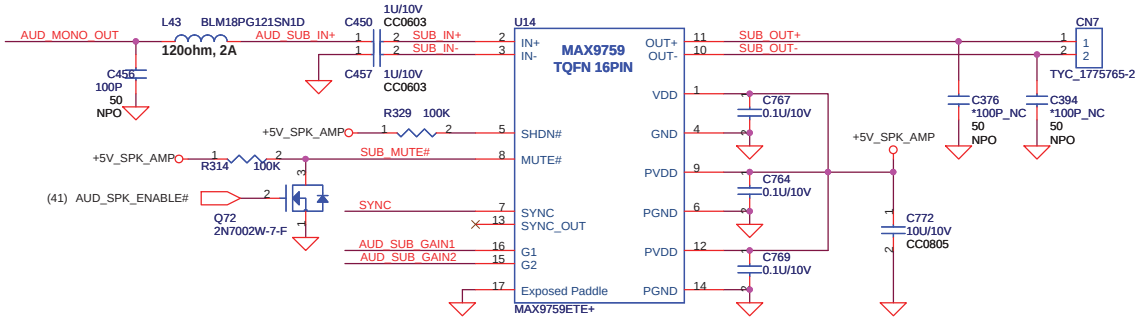

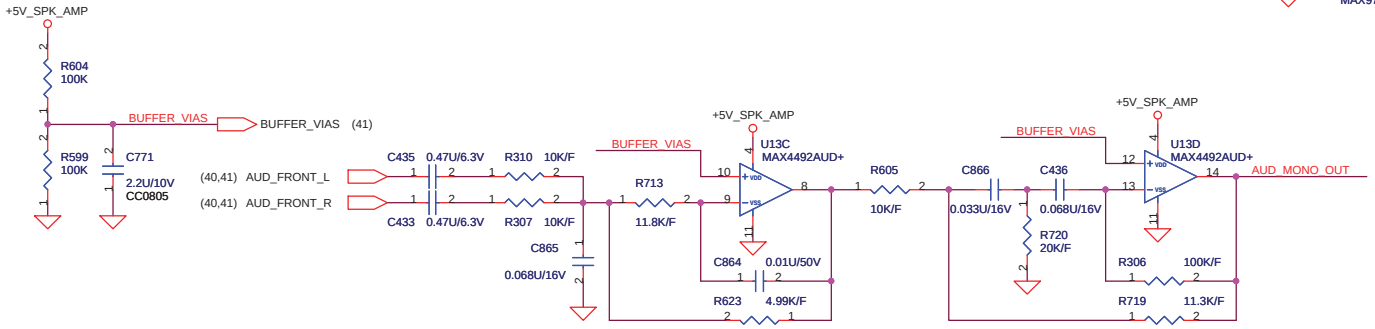

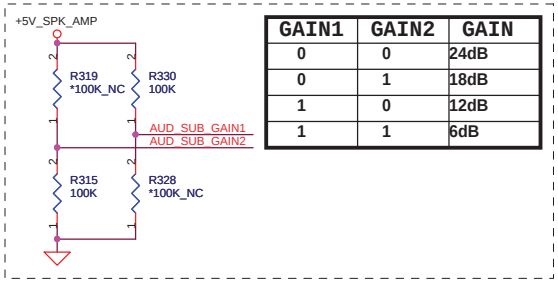

GAIN1	GAIN2	GAIN
0	0	24dB
0	1	18dB
1	0	12dB
1	1	6dB

Ambient Parts of Headphone & MIC Jack

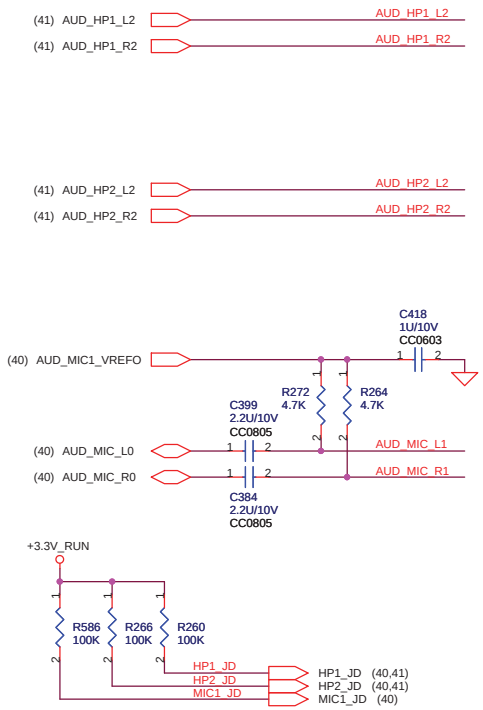

To IB(IO Board) connector

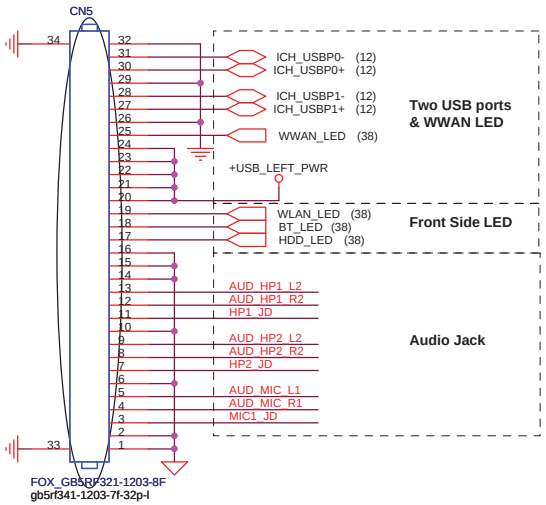

Scott_0123:Change CN5 PN with DFHD32MR003 (FOX).

Adding additional AGND

QUANTA COMPUTER

Title	IB CONN & SUBWOOFER
Size	Document Number RM3 — Rev 3A
Date	Wednesday, May 06, 2009 — Sheet 42 of 60

http://laptop-motherboard-schematic.blogspot.com/

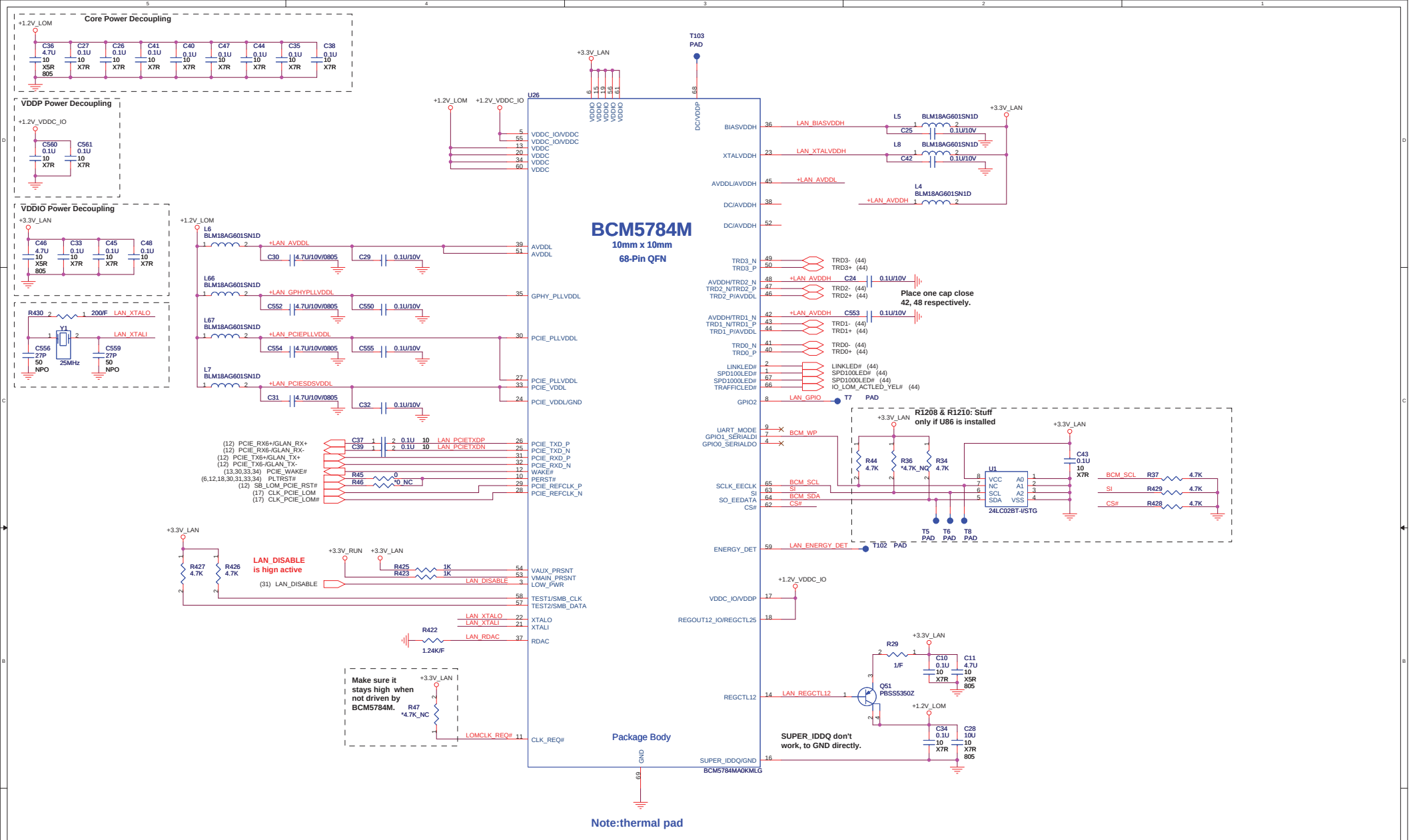

http://laptop-motherboard-schematic.blogspot.com/

QUANTA COMPUTER

Title	LAN (BCM5784M)	
Size	Document Number RM3	Rev 3A
Date: Wednesday, May 06, 2009	Sheet 43 of 60	

TRANSFORMER

Layout Note:
Route TRD+/- pairs with 100 ohm differential trace immpedance.

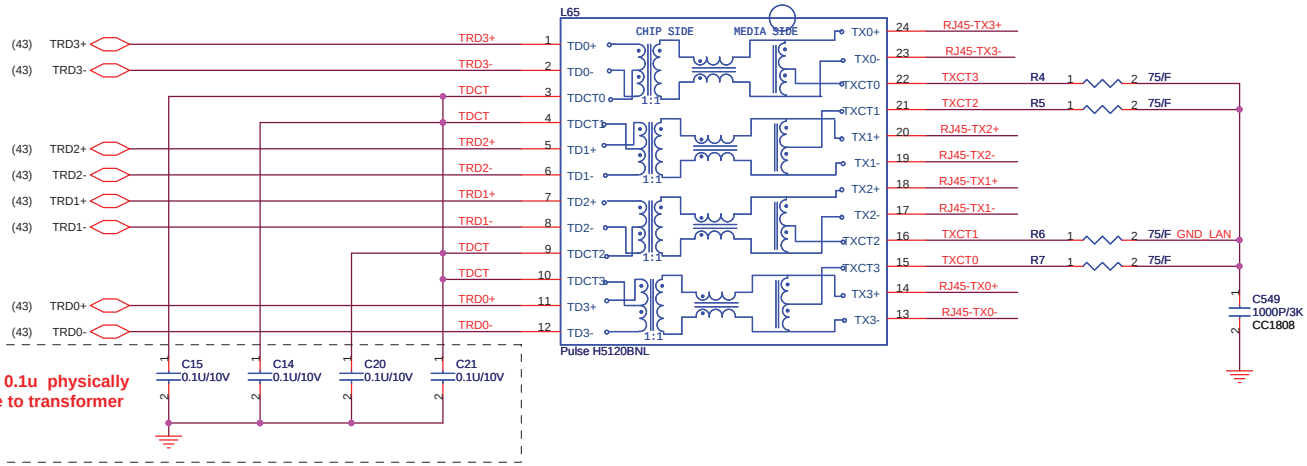

Pace 0.1u physically close to transformer

C15 0.1U/10V
C14 0.1U/10V
C20 0.1U/10V
C21 0.1U/10V

Reserved EMI

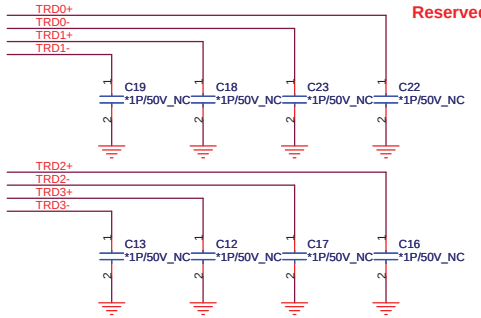

RJ-45 Connector

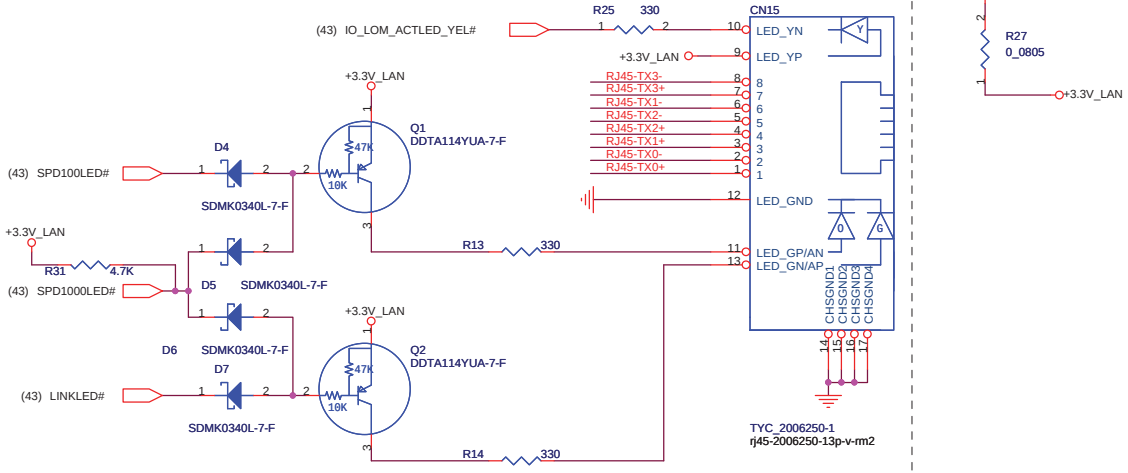

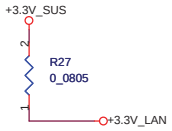

QUANTA COMPUTER

Title	LAN SWITCH	
Size	Document Number RM3	Rev 3A
Date: Wednesday, May 06, 2009	Sheet 44 of 60	

http://laptop-motherboard-schematic.blogspot.com/

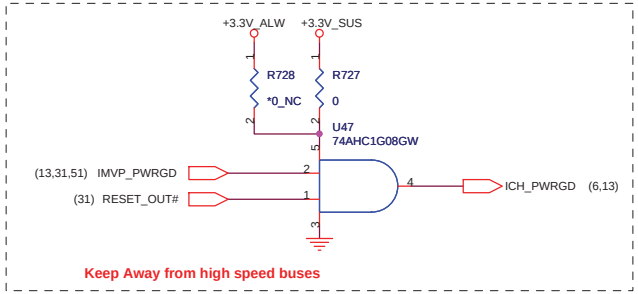

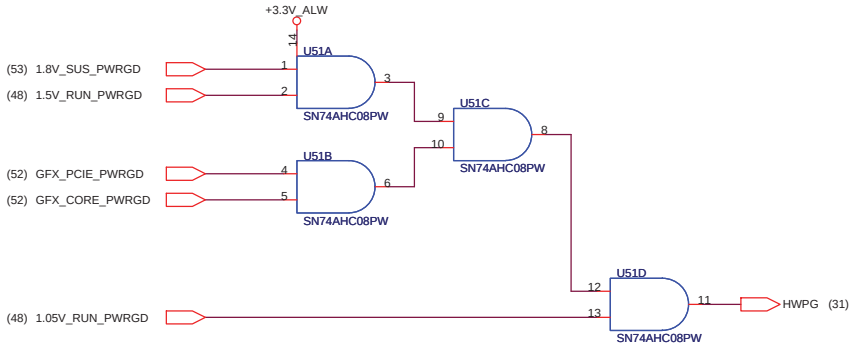

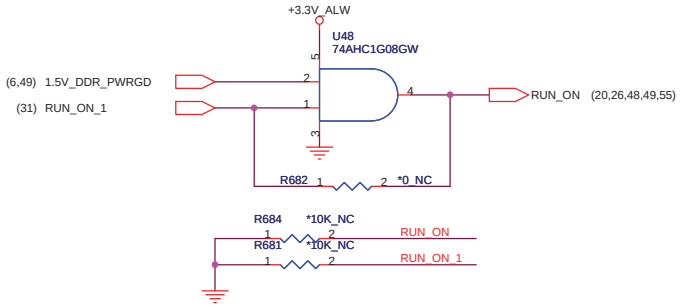

QUANTA COMPUTER

Title	System Reset Circuit
Size	Document Number RM3
Rev	3A
Date	Wednesday, May 06, 2009
Sheet	45 of 60

http://laptop-motherboard-schematic.blogspot.com/

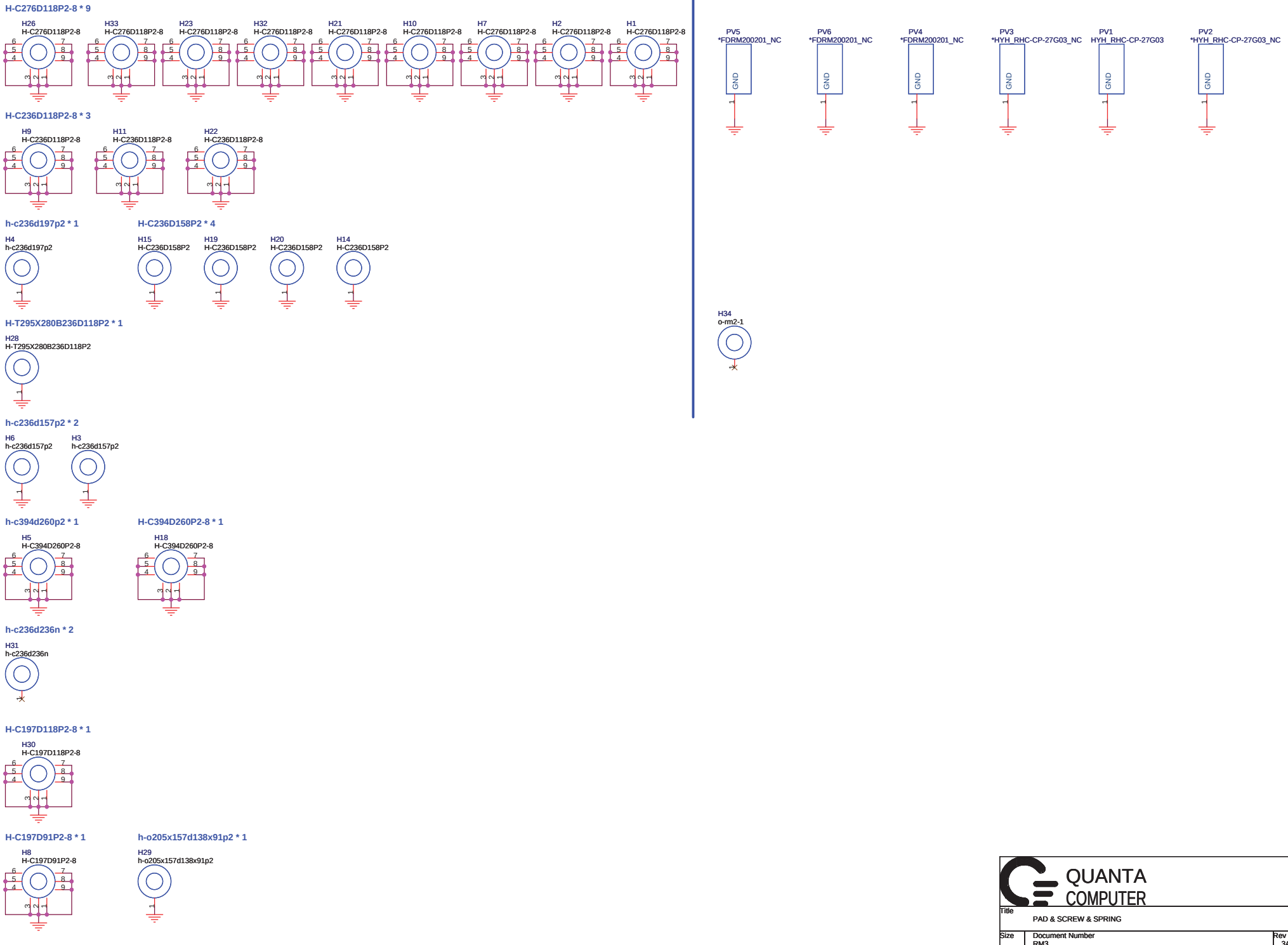

http://laptop-motherboard-schematic.blogspot.com/

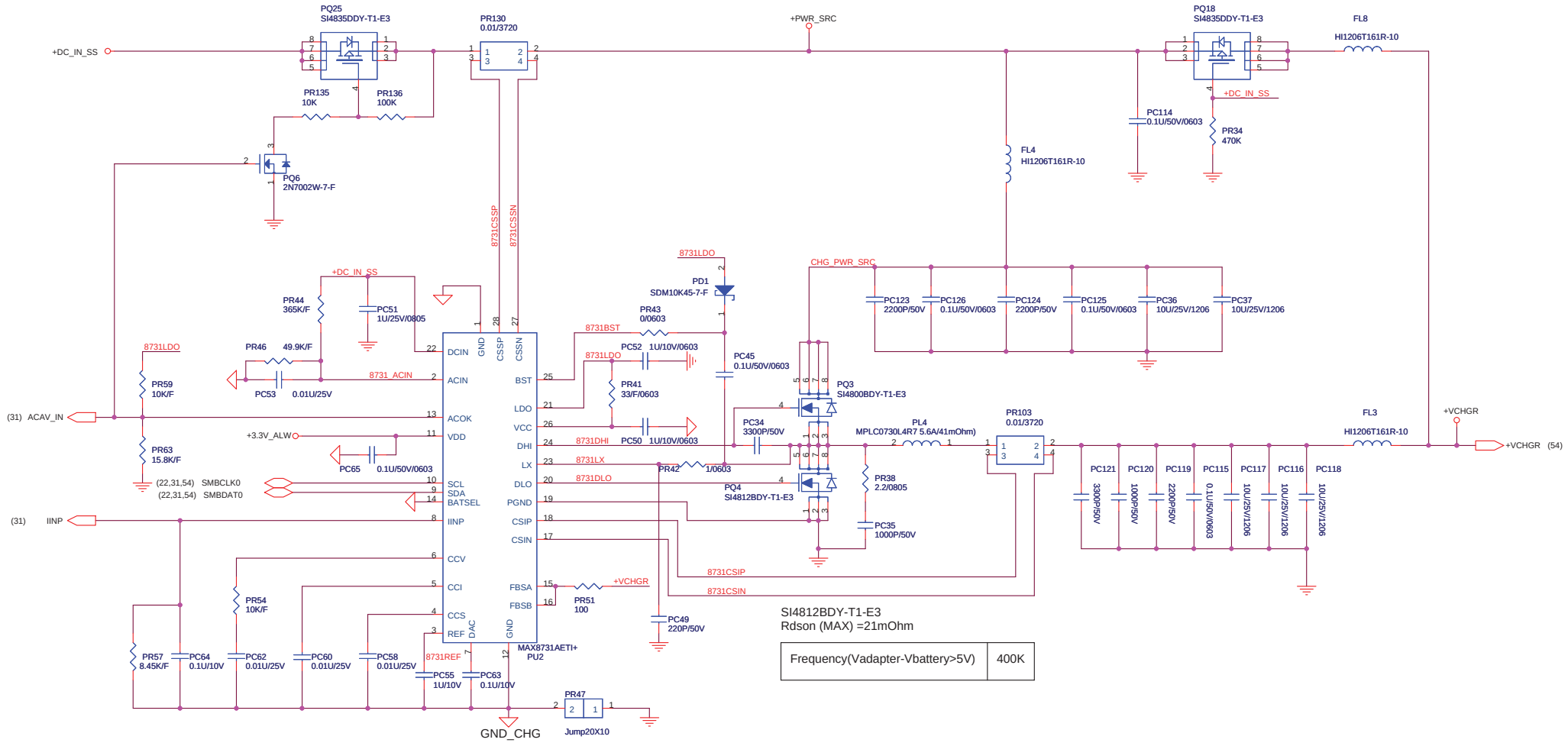

QUANTA COMPUTER

Title	CHARGER (MAX8731A)
Size	Document Number RM3
Rev	3A
Date:	Sheet 47 of 60

http://laptop-motherboard-schematic.blogspot.com/

2005/4/21

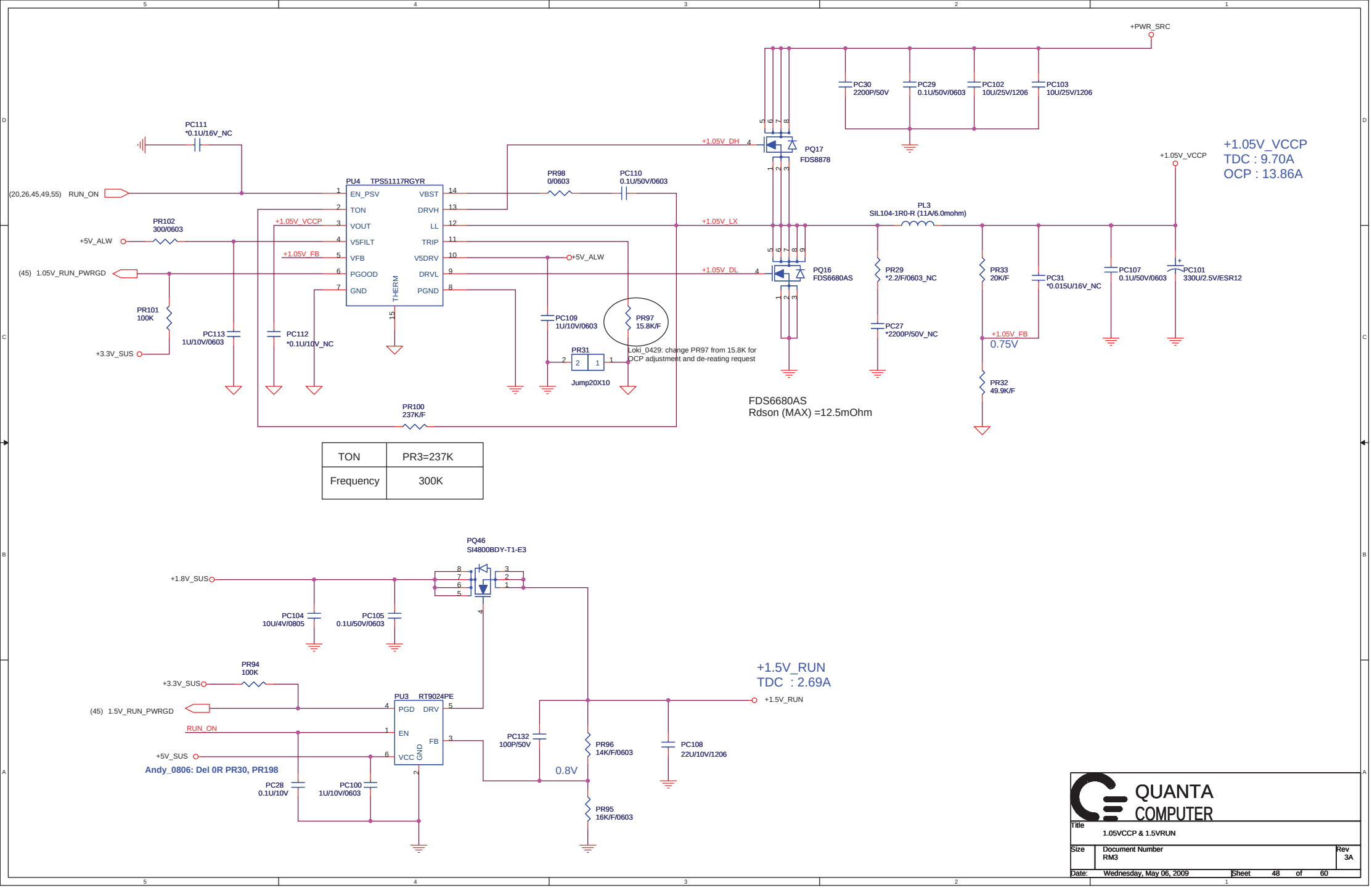

http://laptop-motherboard-schematic.blogspot.com/

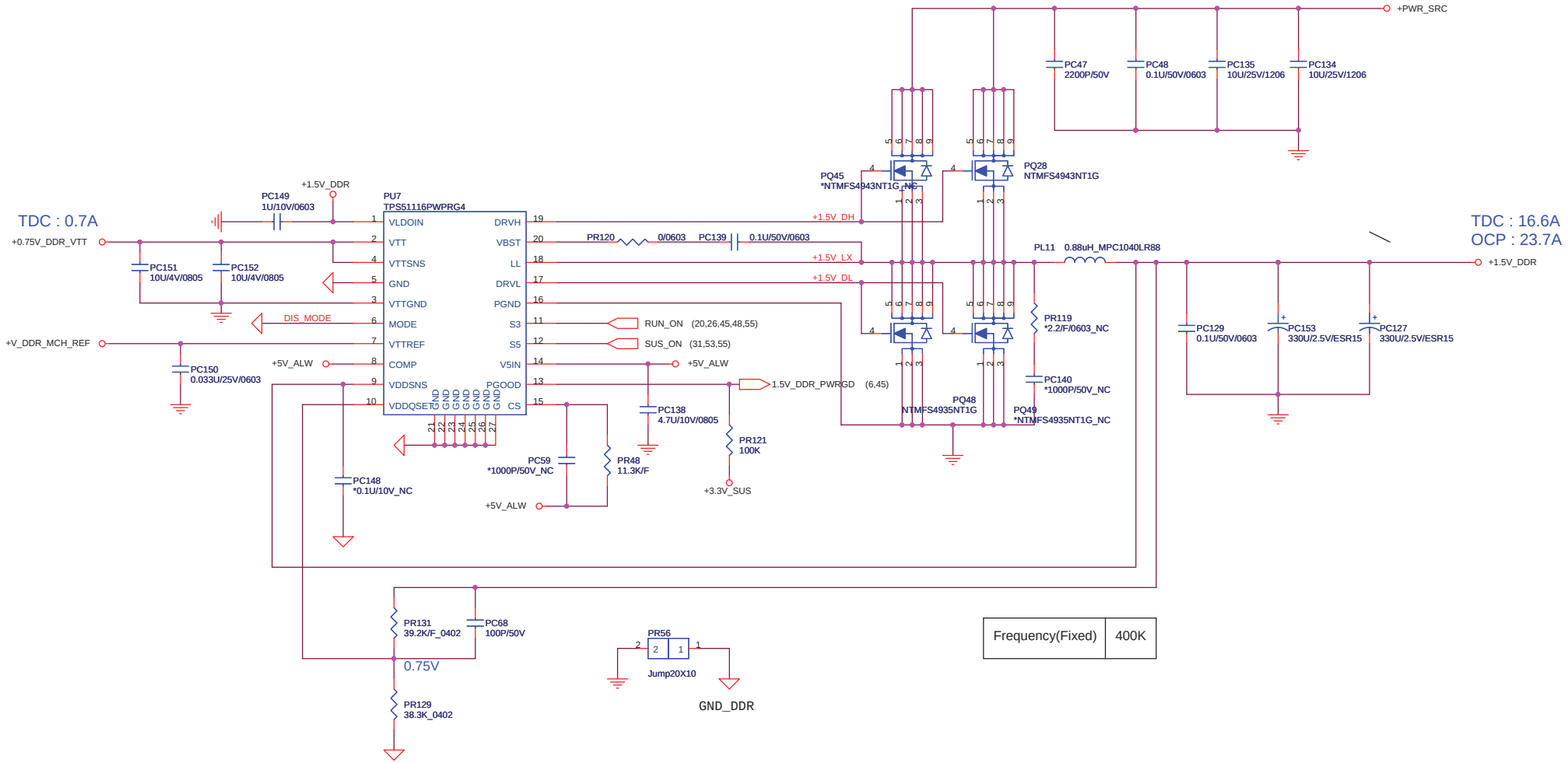

Frequency(Fixed)	400K

QUANTA COMPUTER

Title	1.5_DDR/0.75(TPS51116)	
Size	Document Number RM3	Rev 3A
Date: Wednesday, May 06, 2009	Sheet 49 of 60	

http://laptop-motherboard-schematic.blogspot.com/

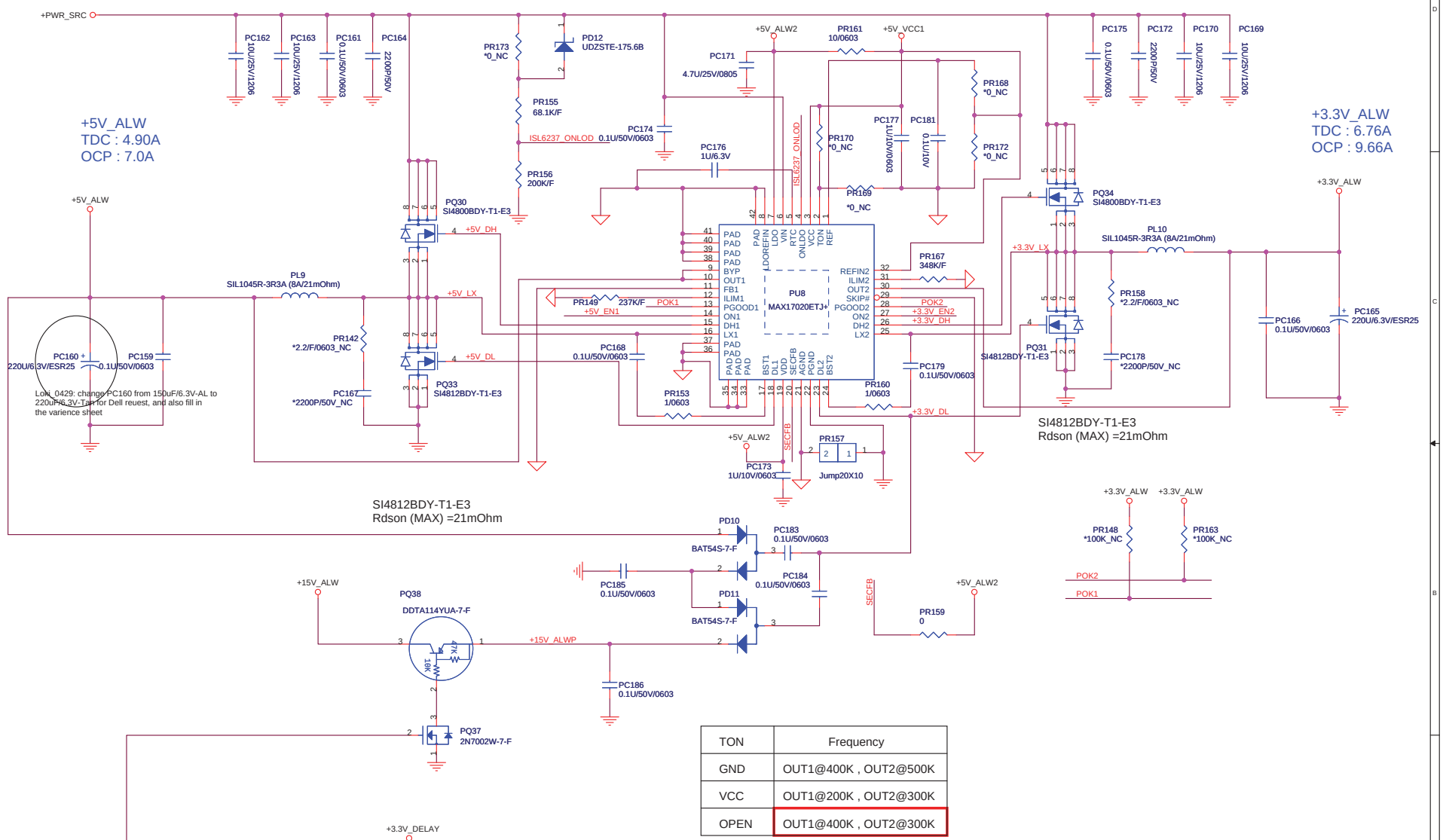

TON	Frequency
GND	OUT1@400K , OUT2@500K
VCC	OUT1@200K , OUT2@300K
OPEN	OUT1@400K , OUT2@300K

QUANTA COMPUTER

Title	3.3V/5V/15V (MAX17020)
Size	Document Number RMB
Rev	3A
Date:	Wednesday, May 06, 2009
Sheet	50 of 60

http://laptop-motherboard-schematic.blogspot.com/

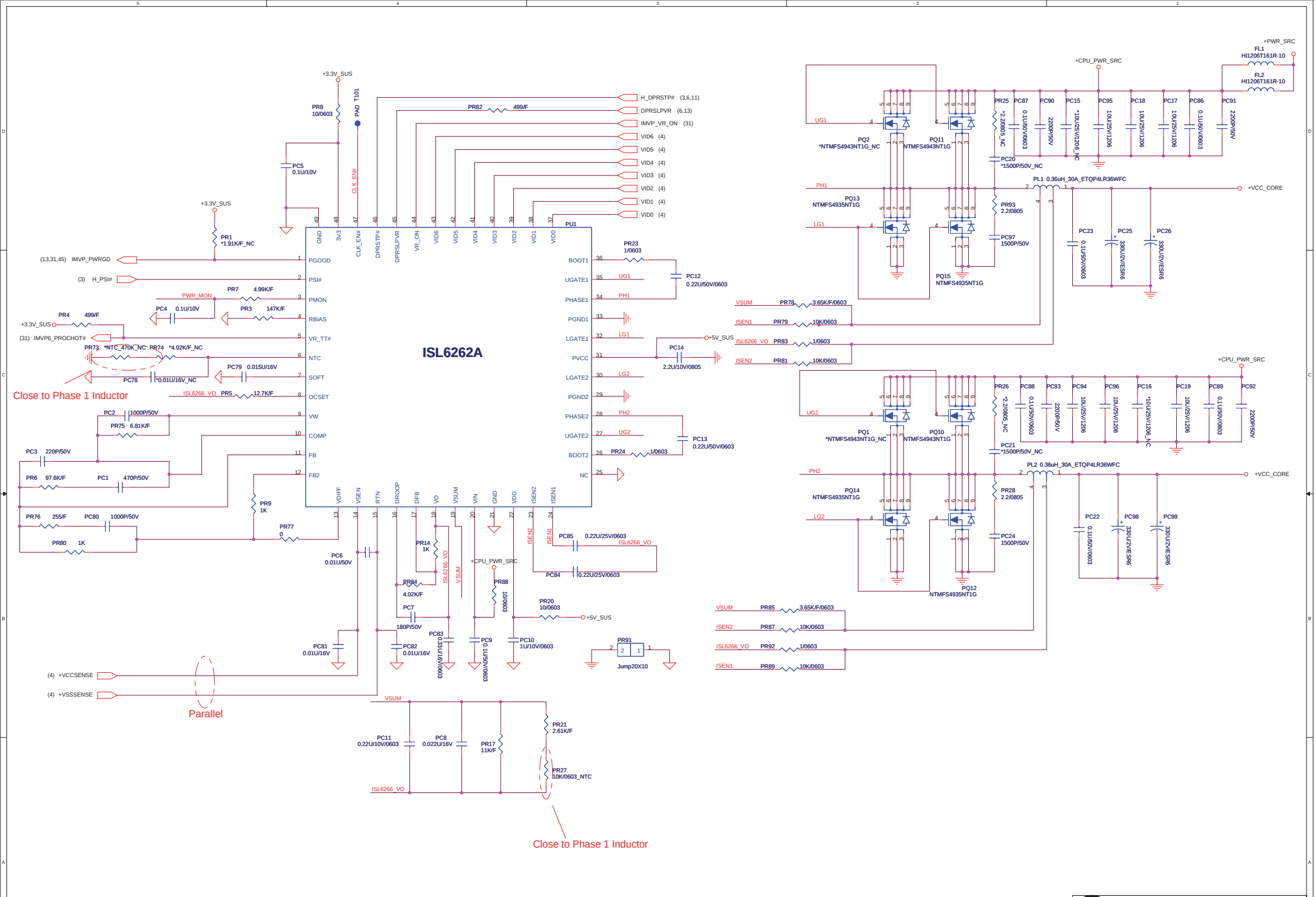

QUANTA COMPUTER

Title	CPU_POWER (ISL6262A)	
Size	Document Number RM3	Rev 3A
Date: Wednesday, May 06, 2009	Sheet 51 of 60	

http://laptop-motherboard-schematic.blogspot.com/

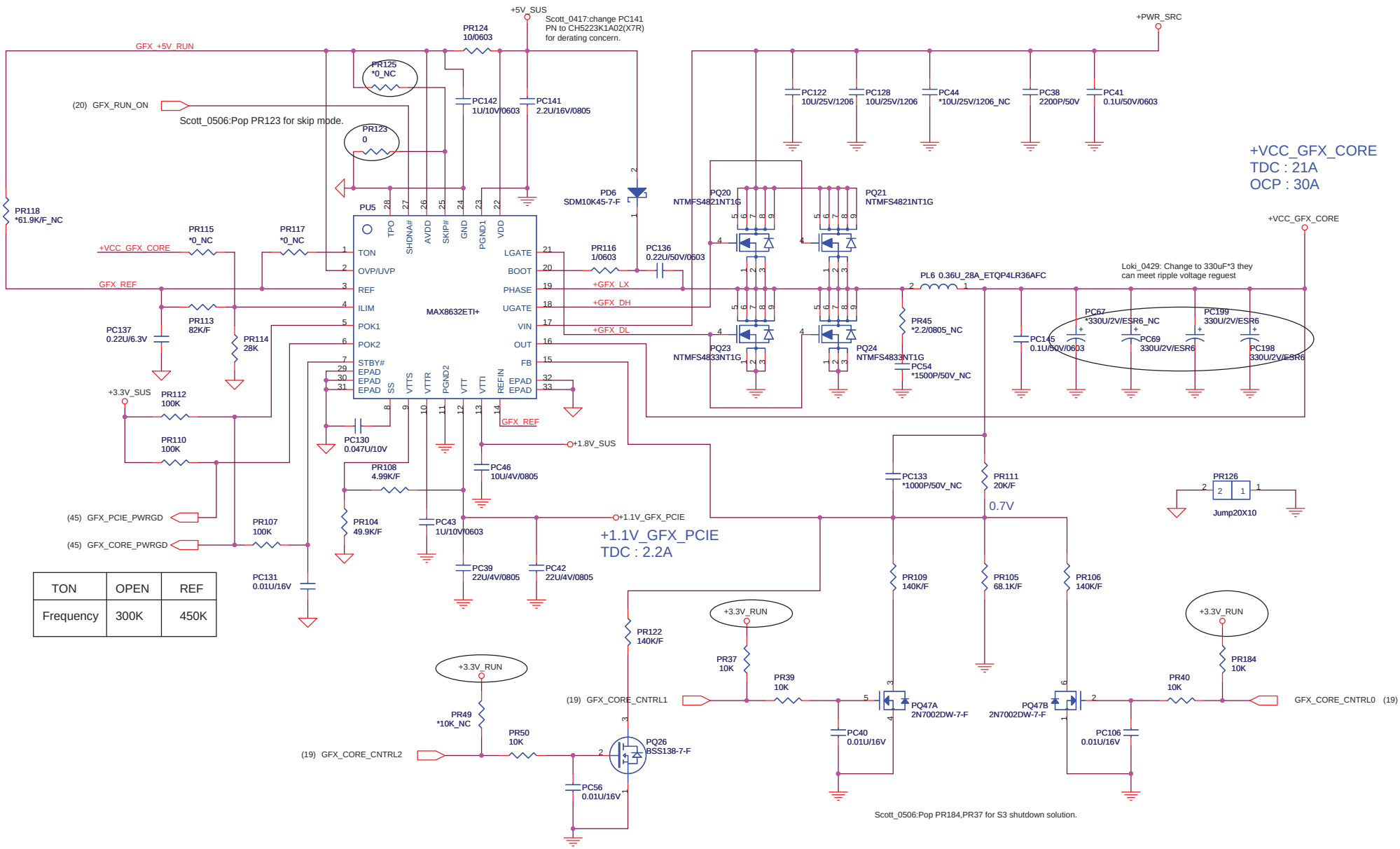

TON	OPEN	REF
Frequency	300K	450K

GFX_CORE_CNTRL0	GFX_CORE_CNTRL1	GFX_CORE_CNTRL2	+VCC_GFX_CORE
LOW	LOW	LOW	0.9V
HIGH	LOW	LOW	1.0V
HIGH	HIGH	LOW	1.1V
HIGH	HIGH	HIGH	1.2V

ILIM	Iovp=(2*(Rb/(Ra+Rb))*0.1*(1/RDSON)+(I_DELTA/2)
SKIP#	AVDD = Low-noise, forced-PWM mode. GND = Pulse-skipping operation.
OVP/UVP	The overvoltage limit is 116% of Vout. The undervoltage limit is 70% of Vout.

QUANTA COMPUTER

Title	VGA_M86 (MAX8632)	
Size	Document Number RM3	Rev 3A
Date: Wednesday, May 06, 2009	Sheet 52 of 60	

http://laptop-motherboard-schematic.blogspot.com/

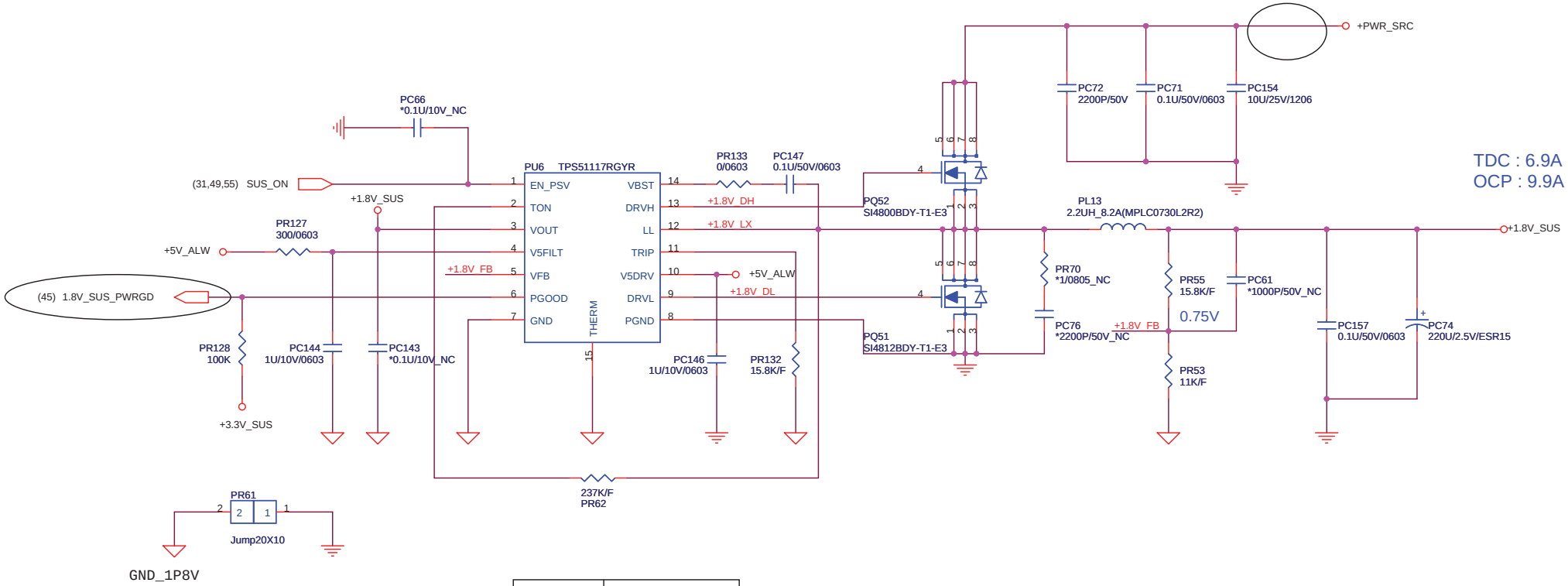

TON	PR62=237K
Frequency	300K

QUANTA COMPUTER

Title	1.8V_SUS (TPS51117)		
Size	Document Number RM3		Rev 3A
Date: Wednesday, May 06, 2009	Sheet 53 of 60		

http://laptop-motherboard-schematic.blogspot.com/

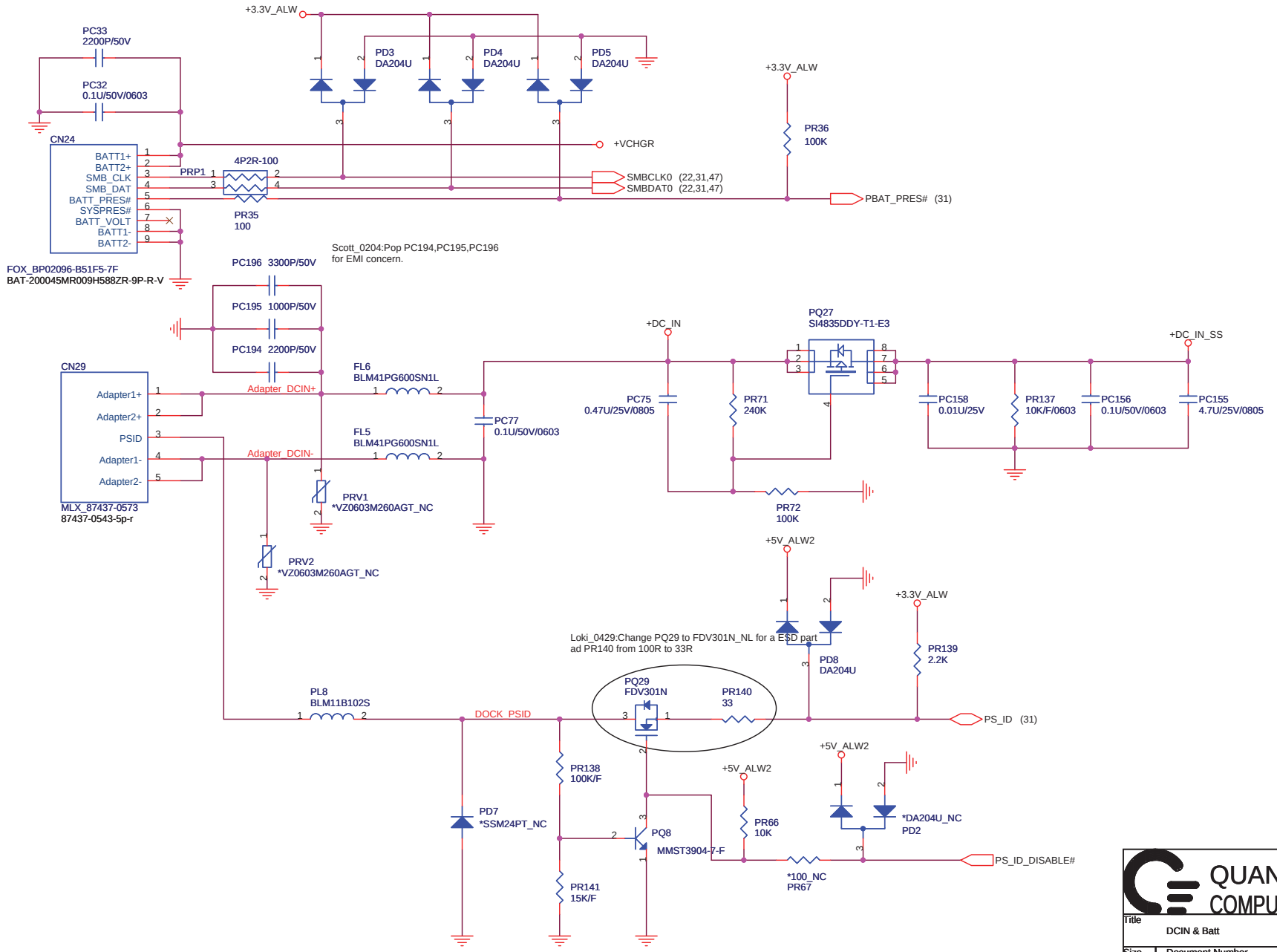

QUANTA COMPUTER

Title	DCIN & Batt
Size	Document Number RM3
Rev	3A
Date:	Wednesday, May 06, 2009
Sheet	54 of 60

http://laptop-motherboard-schematic.blogspot.com/

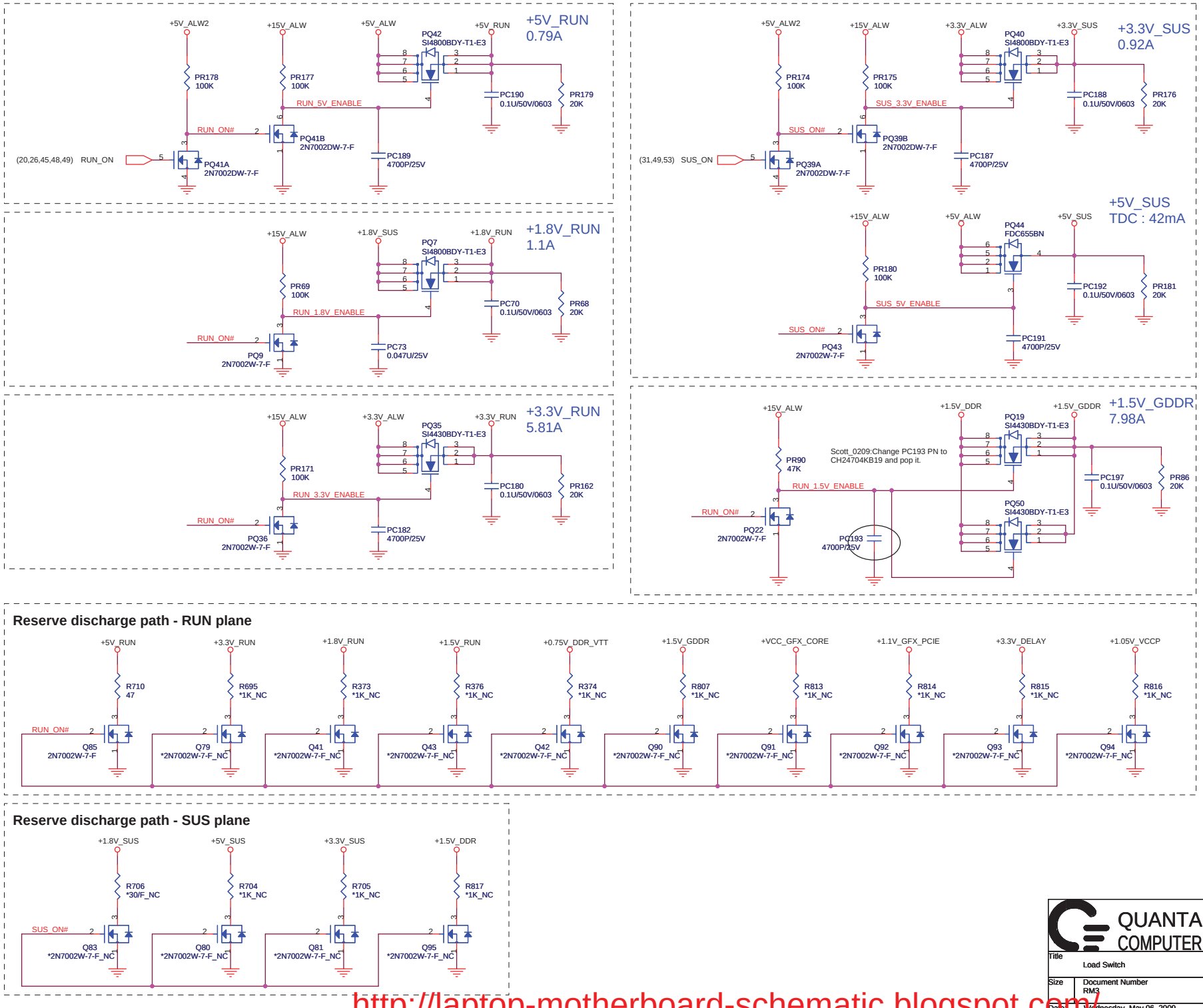

QUANTA COMPUTER

Title	Load Switch	
Size	Document Number RM3	Rev 3A
Date	Wednesday, May 06, 2009	Sheet 55 of 60

http://laptop-motherboard-schematic.blogspot.com/

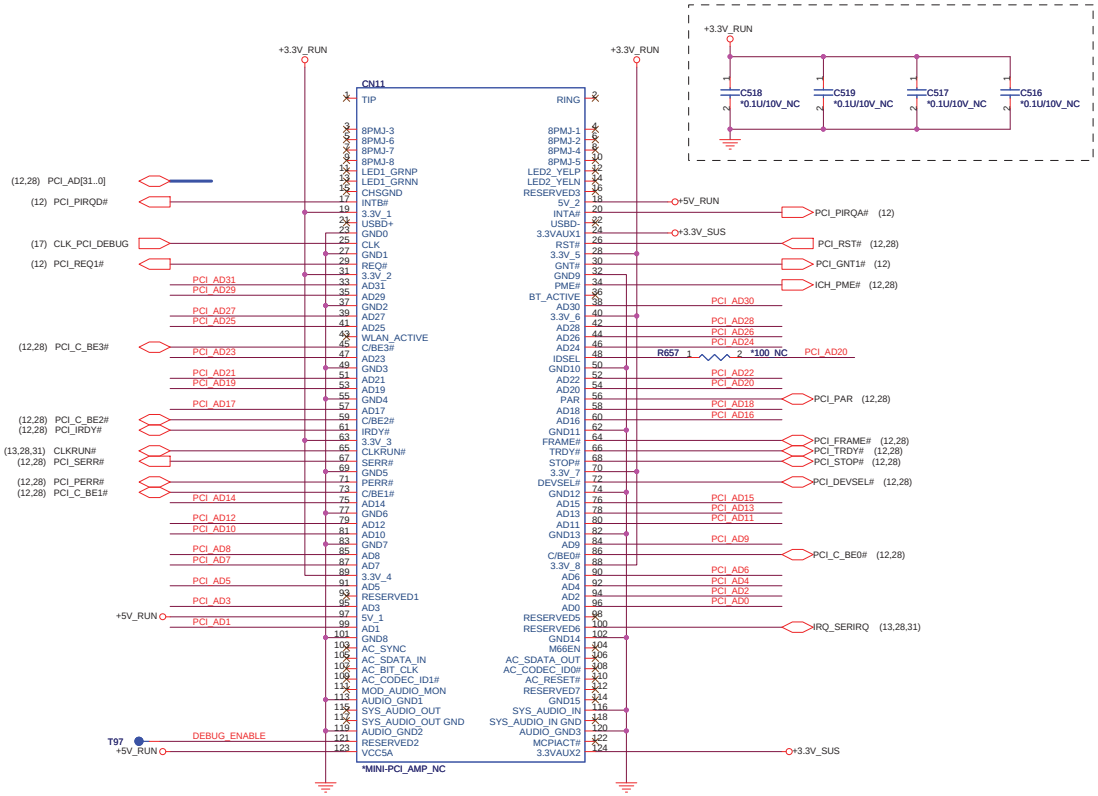

QUANTA COMPUTER

Title	Debug Port (Mini PCI)	
Size	Document Number RM3	Rev 3A
Date: Wednesday, May 06, 2009	Sheet 56 of 60	

http://laptop-motherboard-schematic.blogspot.com/

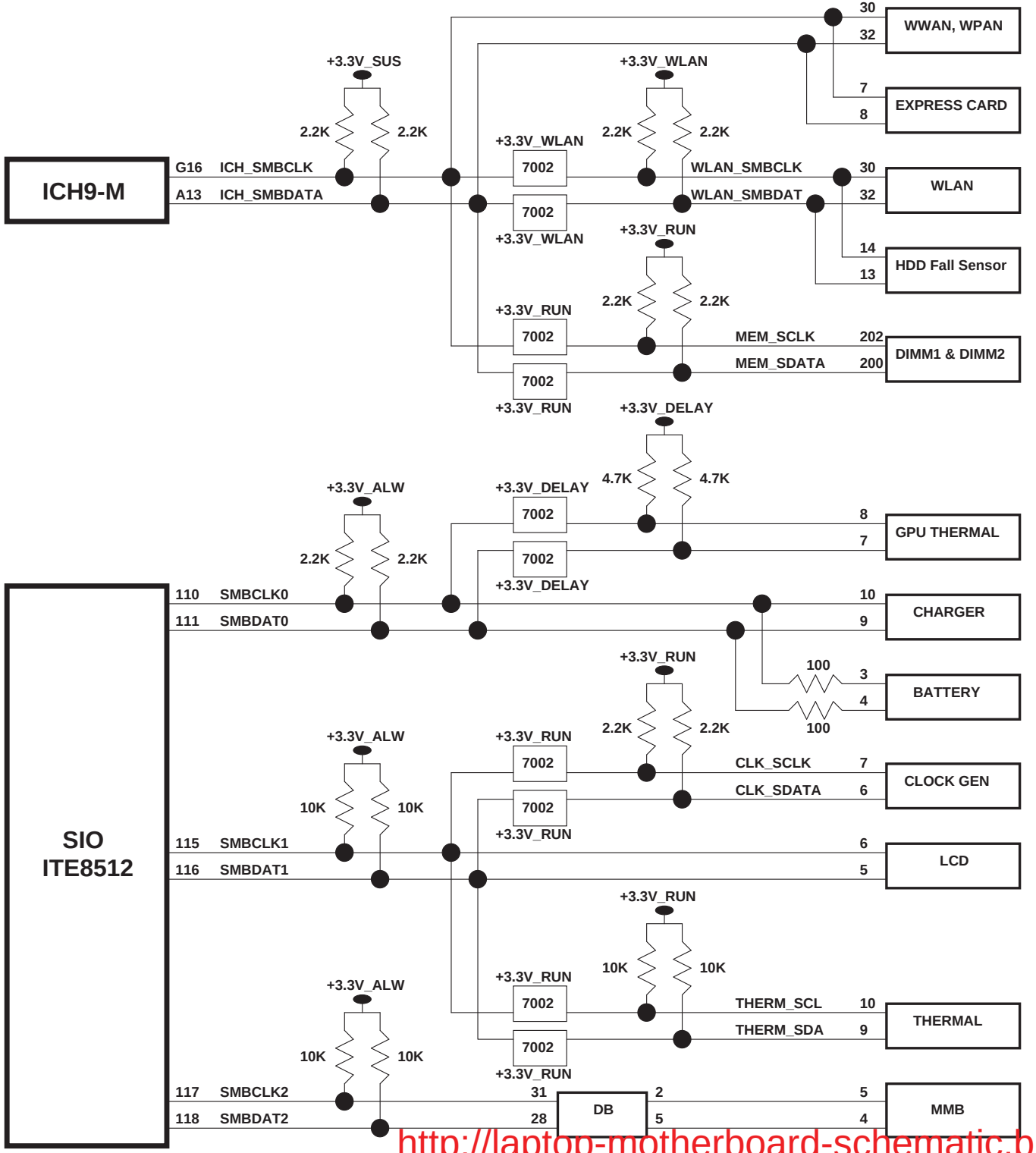

QUANTA COMPUTER

Title	SMBUS BLOCK		
Size	Document Number RM3		Rev 3A
Date: Wednesday, May 06, 2009	Sheet 57 of 60		

http://laptop-motherboard-schematic.blogspot.com/

POWER STATES

State \ Signal	SLP_S3#	SLP_S4#	SLP_S5#	S4_STATE#	ALWAYS PLANE	SUS PLANE	RUN PLANE	CLOCKS
S0 (Full ON) / M0	HIGH	N/A	HIGH	N/A	ON	ON	ON	ON
S3 (Suspend to RAM) / M-OFF	LOW	N/A	HIGH	N/A	ON	ON	OFF	OFF
S4 (Suspend to DISK) / M-OFF	LOW	N/A	HIGH	N/A	ON	OFF	OFF	OFF
S5 (SOFT OFF) / M-OFF	LOW	N/A	LOW	N/A	ON	OFF	OFF	OFF

PM TABLE

State \ power plane	+RTC_CELL	+DC_IN +DC_IN_SS +PWR_SRC +CPU_PWR_SRC +5V_ALW2 +MMB_PWR +3.3V_ALW	+5V_ALW +15V_ALW +5V_SUS +3.3V_SUS +3.3V_LAN +3.3V_CARDAUX +1.8V_SUS +1.5V_DDR	+VCC_CORE +0.75V_DDR_VTT +1.05V_VCCP +1.1V_GFX_PCIE +1.2V_LOM +1.5V_RUN +1.5V_CARD +1.8V_RUN +3.3V_RUN +3.3V_DELAY +3.3V_R5C833	+3.3V_RUN_CARD +3.3V_CARD +3.3V_WLAN +5V_RUN +LCDVCC +5V_HDD +5V_MOD +5V_SPK_AMP +VDDA +GFX_PWR_SRC
S0	ON	ON	ON	ON	
S3	ON	ON	ON	OFF	
S5 & S4 with AC or BAT	ON	ON	OFF	OFF	
no AC/Battery	ON	OFF	OFF	OFF	

PCI TABLE

PCI DEVICE	IDSEL	REQ#/GNT#	PIRQ
R5C833	AD17	REQ#0 / GNT#0	PIRQB: 1394 PIEQC: Card reader

	USB PORT#	DESTINATION
ICH9-M	0	Side pair Top / left
	1	Side pair Bottom / left
	2	Reserved
	3	Reserved
	4	Mini Card (WLAN)
	5	Mini Card (WWAN)
	6	Mini Card (WPAN)
	7	Express Card
	8	USB W/ E-SATA port
	9	TV
	10	Reserved
	11	Camera

	PCI EXPRESS	DESTINATION
ICH9-M	Lane 1	Mini Card-1 WWAN
	Lane 2	Mini Card-2 WLAN
	Lane 3	Mini Card-3 WPAN
	Lane 4	Express Card
	Lane 5	None
	Lane 6	LOM

QUANTA COMPUTER

Title	Power statu	
Size	Document Number RM3	Rev 3A
Date: Wednesday, May 06, 2009	Sheet 58 of 60	

http://laptop-motherboard-schematic.blogspot.com/

RM2 Power Design Block Diagram 2008/10/03

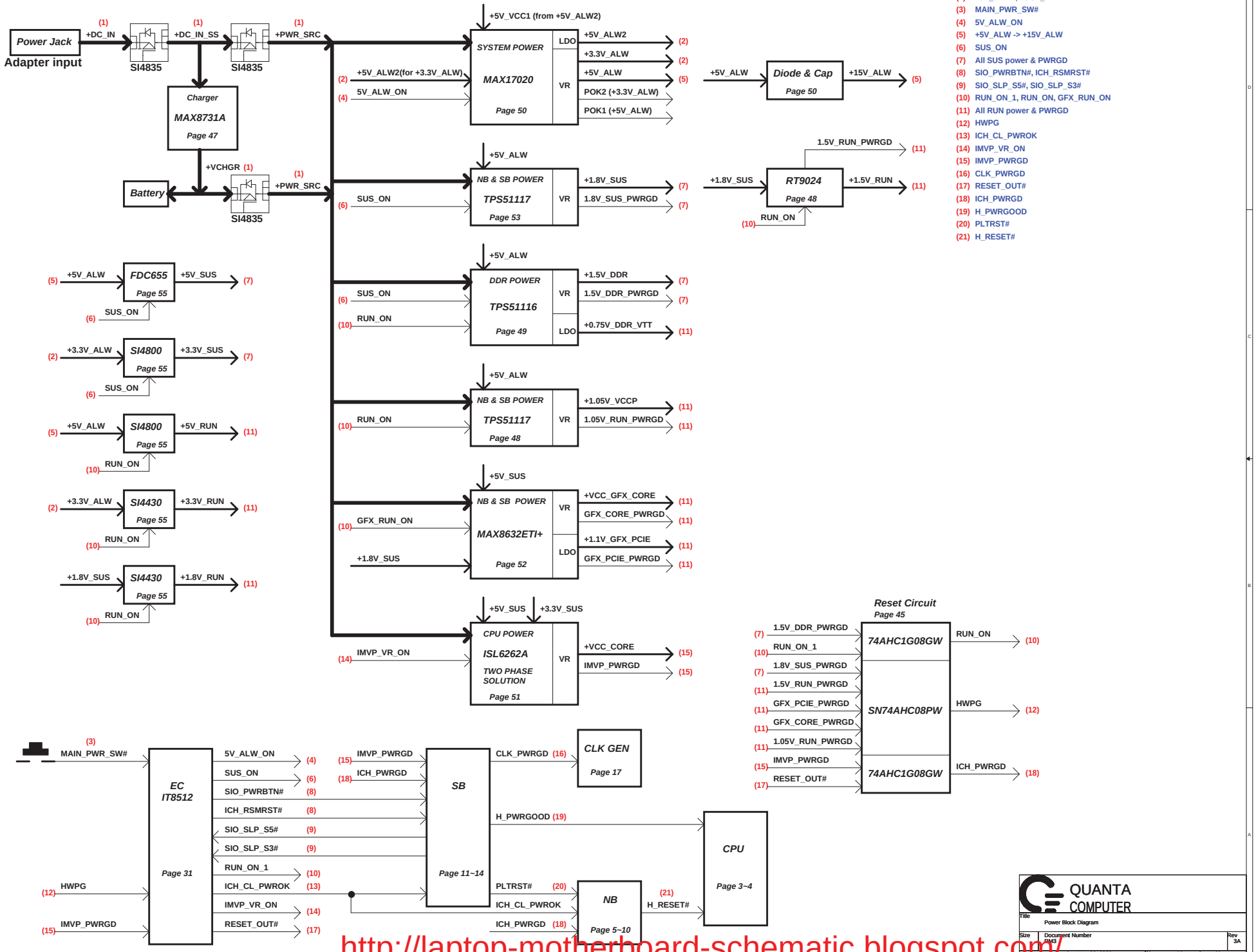

(1) AC : DC_IN -> DC_IN_SS -> +PWR_SRC
Bat : +VCHGR -> +PWR_SRC
(2) +5V_ALW2, +3.3V_ALW
(3) MAIN_PWR_SW#
(4) 5V_ALW_ON
(5) +5V_ALW -> +15V_ALW
(6) SUS_ON
(7) All SUS power & PWRGD
(8) SIO_PWRBTN#, ICH_RSMRST#
(9) SIO_SLP_S5#, SIO_SLP_S3#
(10) RUN_ON_1, RUN_ON, GFX_RUN_ON
(11) All RUN power & PWRGD
(12) HWPG
(13) ICH_CL_PWROK
(14) IMVP_VR_ON
(15) IMVP_PWRGD
(16) CLK_PWRGD
(17) RESET_OUT#
(18) ICH_PWRGD
(19) H_PWRGOOD
(20) PLTRST#
(21) H_RESET#

QUANTA COMPUTER

Title	Power Block Diagram
Size	Document Number RM3
Rev	3A
Date	Wednesday, May 06, 2009
Sheet	59 of 60

http://laptop-motherboard-schematic.blogspot.com/