http://hobi-elektronika.net

ZA5(11.6") Block Diagram

ZA5 PCB STACK UP

- LAYER 1 : TOP
- LAYER 2 : GND
- LAYER 3 : IN1
- LAYER 4 : IN2
- LAYER 5 : VCC
- LAYER 6 : BOT

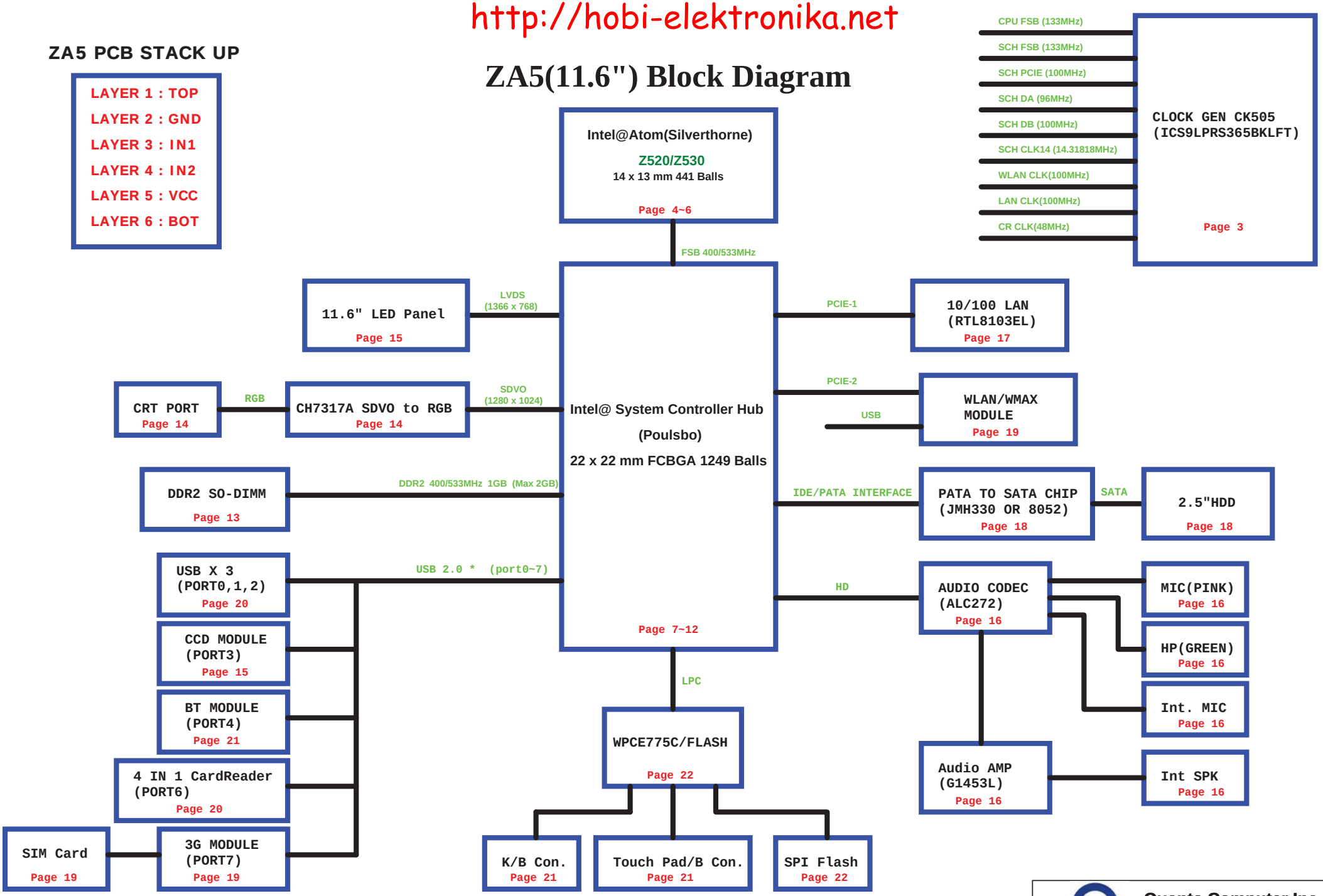

Quanta Computer Inc.		
PROJECT : ZA5		
Size	Document Number: BLOCK DIAGRAM	Rev 1A
Date: Thursday, April 09, 2009	Sheet 1 of 35	

Clock Generator(CLK)

http://hobi-elektronika.net

Clock Gen I2C

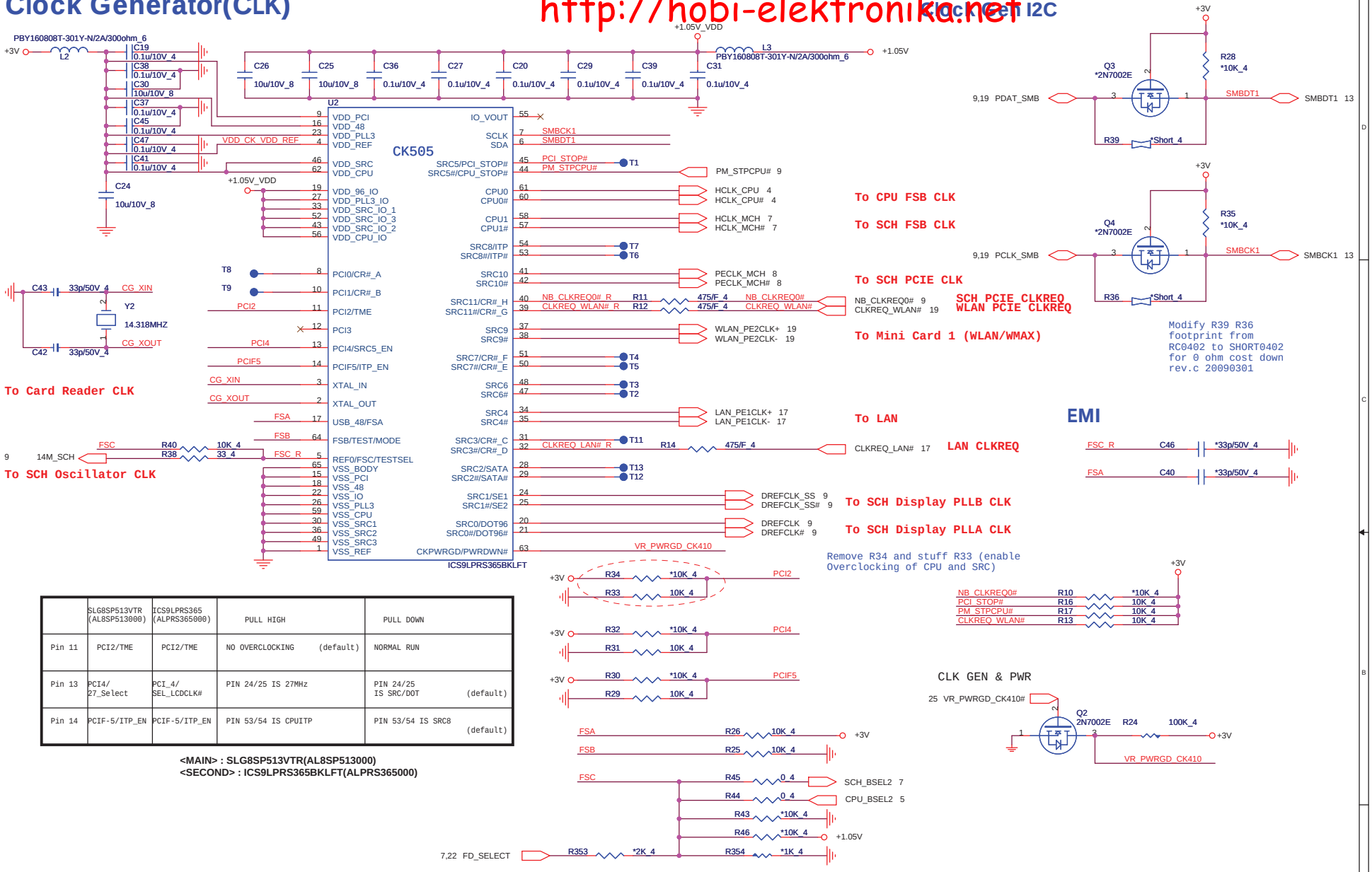

	SLG8SP513VTR (AL8SP513000)	ICS9LPRS365 (ALPRS365000)	PULL HIGH	PULL DOWN
Pin 11	PCI2/TME	PCI2/TME	NO OVERCLOCKING (default)	NORMAL RUN
Pin 13	PCI4/ 27_Select	PCI_4/ SEL_LCDCLK#	PIN 24/25 IS 27MHz	PIN 24/25 IS SRC/DOT (default)
Pin 14	PCIF-5/ITP_EN	PCIF-5/ITP_EN	PIN 53/54 IS CPUITP	PIN 53/54 IS SRC8 (default)

<MAIN> : SLG8SP513VTR(AL8SP513000)
<SECOND> : ICS9LPRS365BKLFT(ALPRS365000)

SEL2 SEL1 SEL0 Frequence select

FD_SELECT	FSC	FSB	FSA	CPU	SRC	PCI	States
1	1	0	1	100	100	33	
0	0	0	1	133	100	33	Default

Quanta Computer Inc.
PROJECT : ZA5

Size	Document Number	Rev
	CLOCK GEN(CK505)	1A

Date: Thursday, April 09, 2009 Sheet 3 of 35

http://hobi-elektronika.net

Silverthorne(CPU)

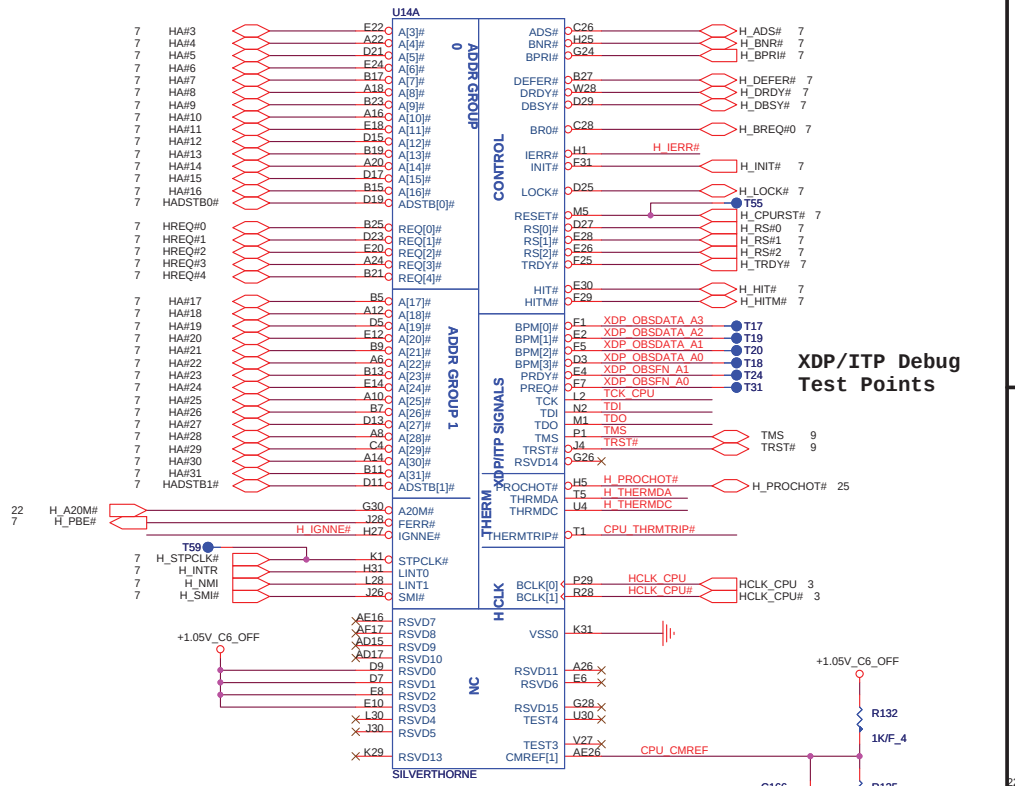

Note : H_FERR# for layout length must be greater than 150mils 20081128

For intel suggest R115 connect to +1.05V_C6_OFF 20081218

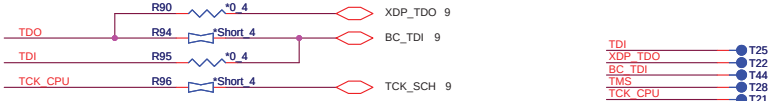

Modify JETC pins for Boundary Scan rev.b 20090205

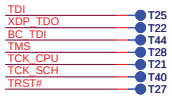

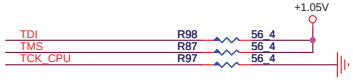

FIE Thermal Monitor(THM)

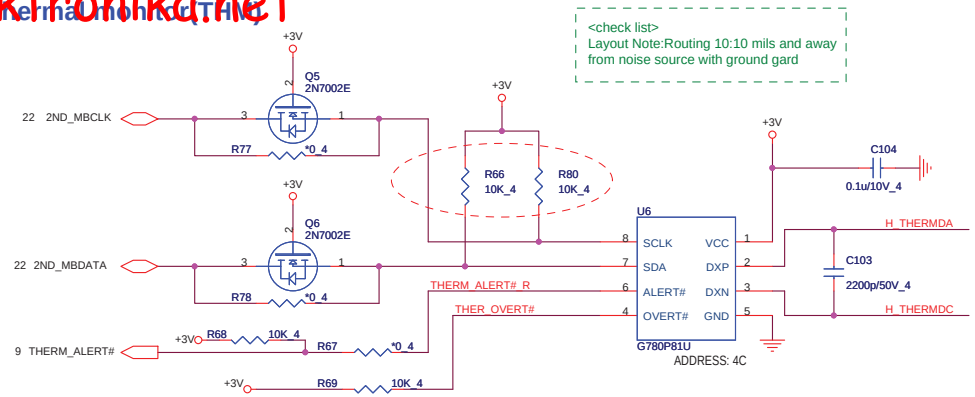

FAN(THM)

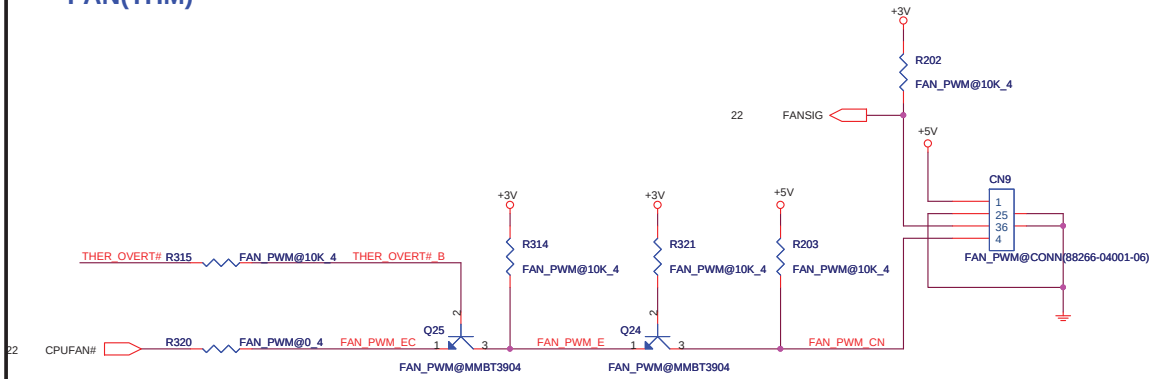

Thermal Trip(CPU)

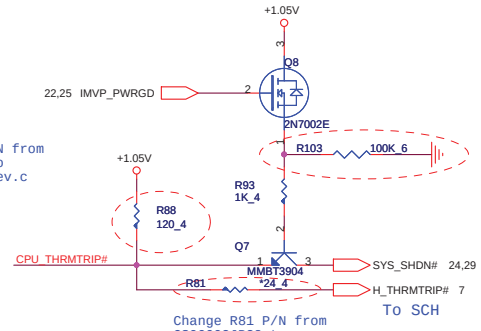

Change R88 P/N from CS05602JB17 to CS11202JB21 rev.c 20090301

Change R81 P/N from CS00002JB38 to CS02402JB11 rev.c 20090301

Quanta Computer Inc.

PROJECT : ZA5

Size	Document Number	Rev
	Silverthorne CPU(01_HOST)	1A

Date: Thursday, April 09, 2009 Sheet 4 of 35

http://hobi-elektronika.net

Silverthorne(CPU)

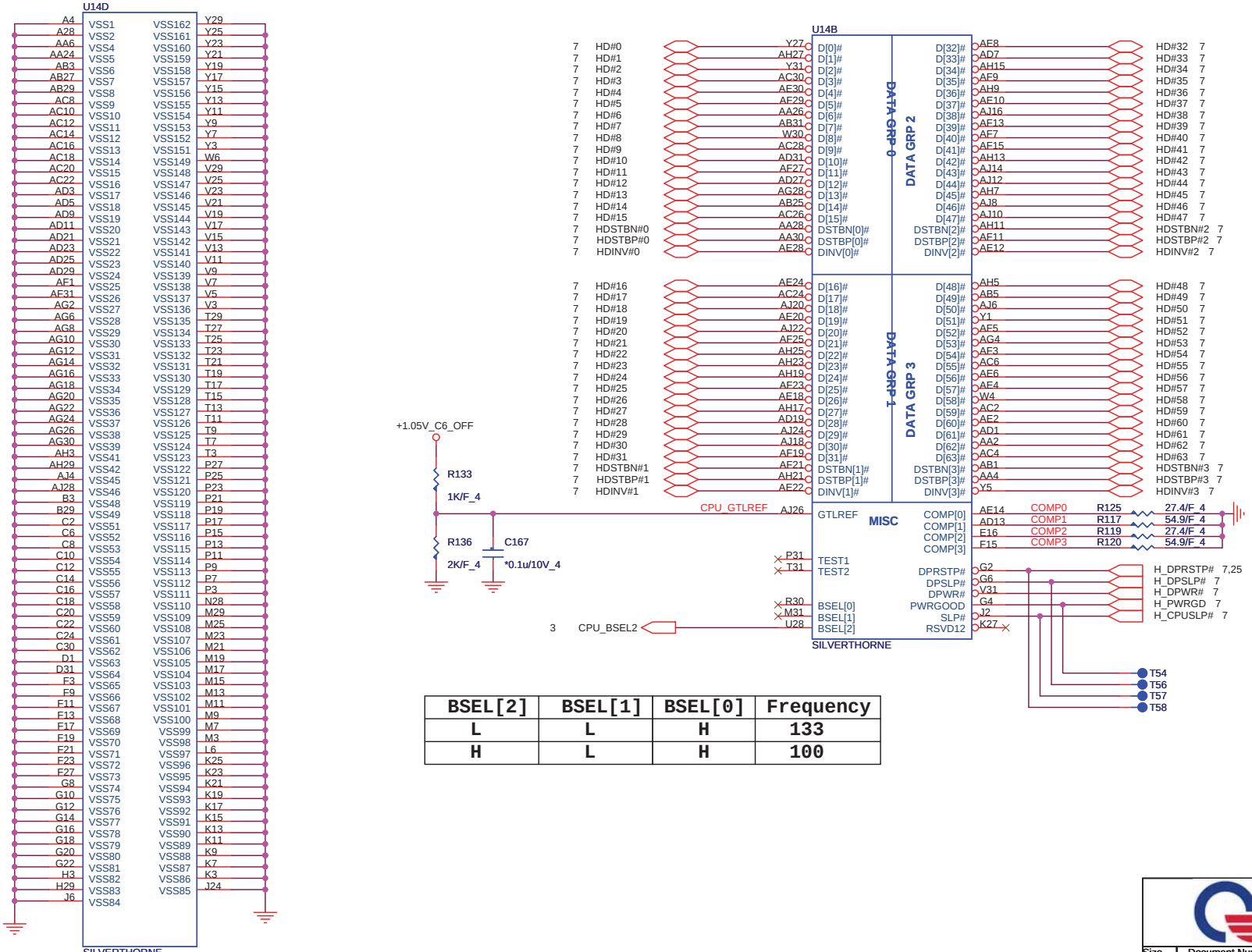

BSEL[2]	BSEL[1]	BSEL[0]	Frequency
L	L	H	133
H	L	H	100

Quanta Computer Inc.

PROJECT : ZA5

Size	Document Number	Rev
	Silverthorne CPU(02_HOST)	1A

Date: Thursday, April 09, 2009 Sheet 5 of 35

Silverthorne(CPU)

http://hobi-elektronika.net

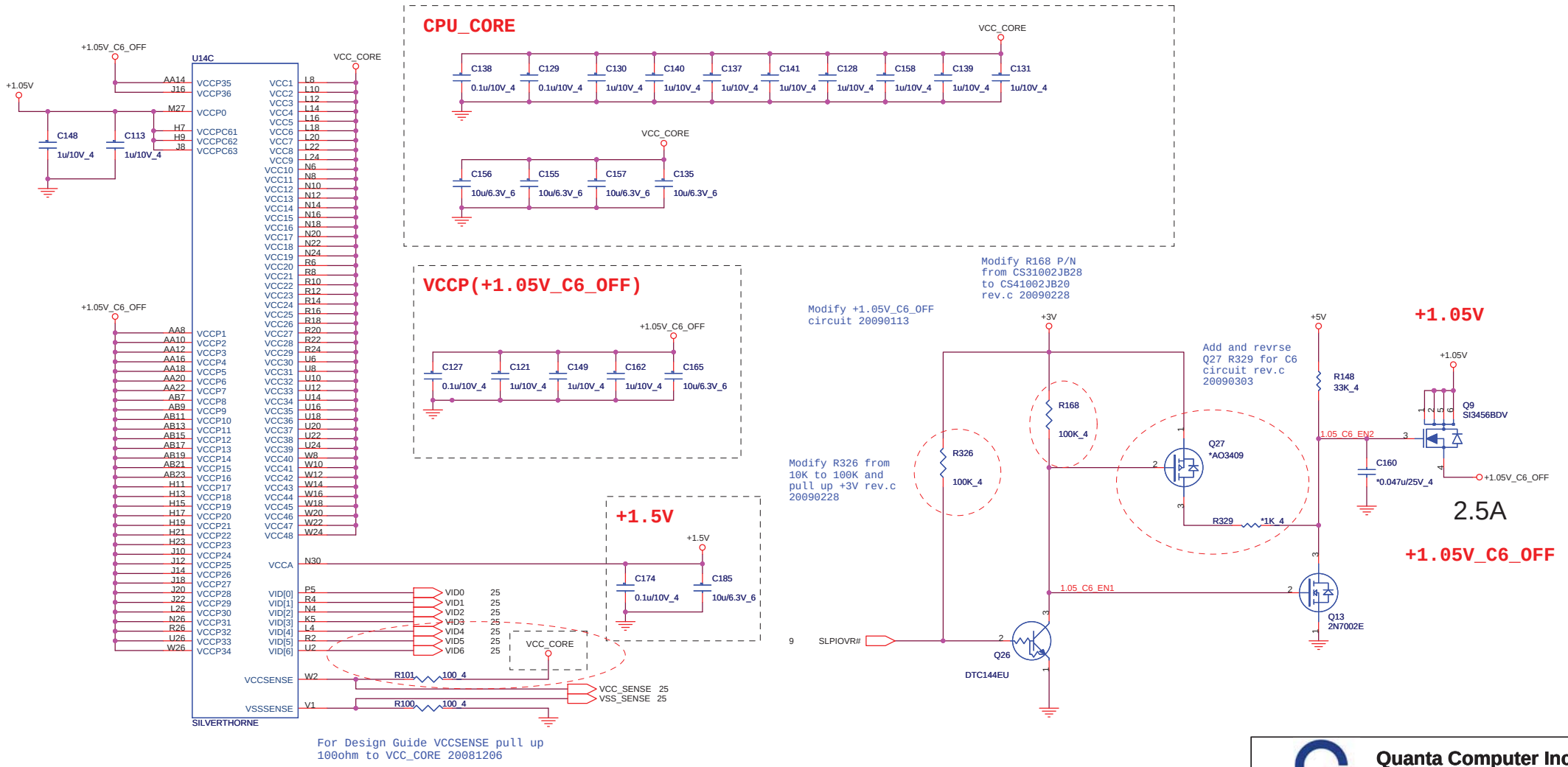

For Design Guide VCCSENSE pull up 100ohm to VCC_CORE 20081206

Quanta Computer Inc.		
PROJECT : ZA5		
Size	Document Number: Silverthorne CPU(03_Power)	Rev 1A
Date: Thursday, April 09, 2009	Sheet 6 of 35	

Poulsbo(CLG)

http://hobi-elektronika.net

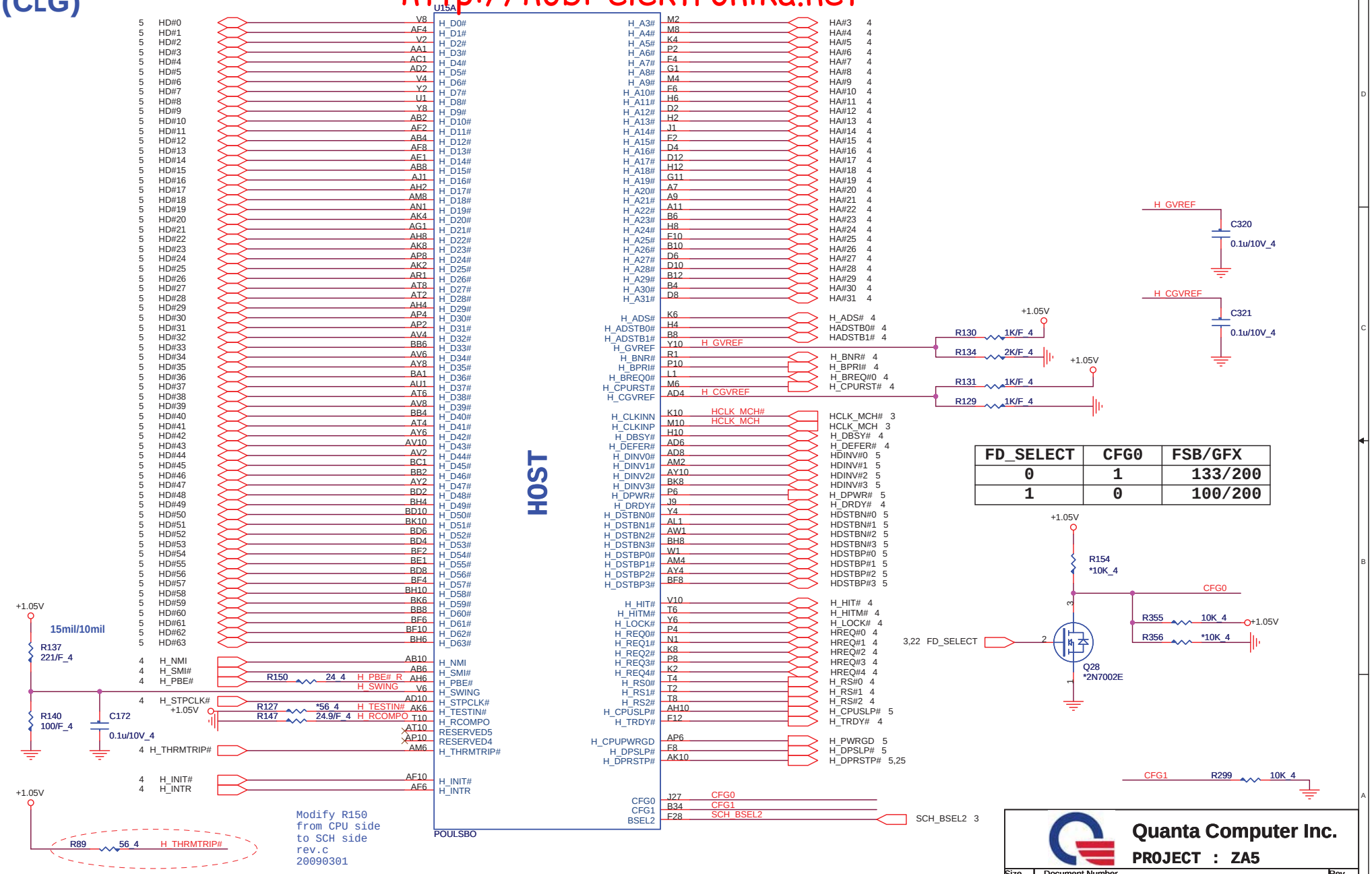

FD_SELECT	CFG0	FSB/GFX
0	1	133/200
1	0	100/200

Quanta Computer Inc.

PROJECT : ZA5

Size	Document Number	Rev
	Poulsbo(01_HOST)	1A

Date: Thursday, April 09, 2009 Sheet 7 of 35

http://hobi-elektronika.net

Poulsbo(CLG)

Stuff R312 for Keyboard
and TP issues rev.c
20090228

Add R333 R334
R335 R336 for
LPC AD0~AD3
rev.c 20090301

EMI

C192 *22p/50V_4 LCLK_EC

Add T60 T61 T62 T63
test point for
Boundary Scan rev.b
20090205

SCH_RSV1 : (LPC_CLKOUT0 buffer strength)
0 = 1 Load driver strength
1 = 2 Load driver strength
*** intel has integrated 300K puii-up

Change C233 C231 C243
C240 C239 C238 C237
C235 from SDVO chip
side to SCH side rev.c
20090301

SDVO to CRT

PCIE TO LAN

PCIE TO WLAN/WMAX

RTC Battery

SANYO:	AHL03001502 ; ML1220-CM11
MATSUSHITA:	AHL03001405 ; ML1220/USTC/TSB1
MAXELL:	AHL03001404 ; ML1220-ZR1S

RTC(RTC)

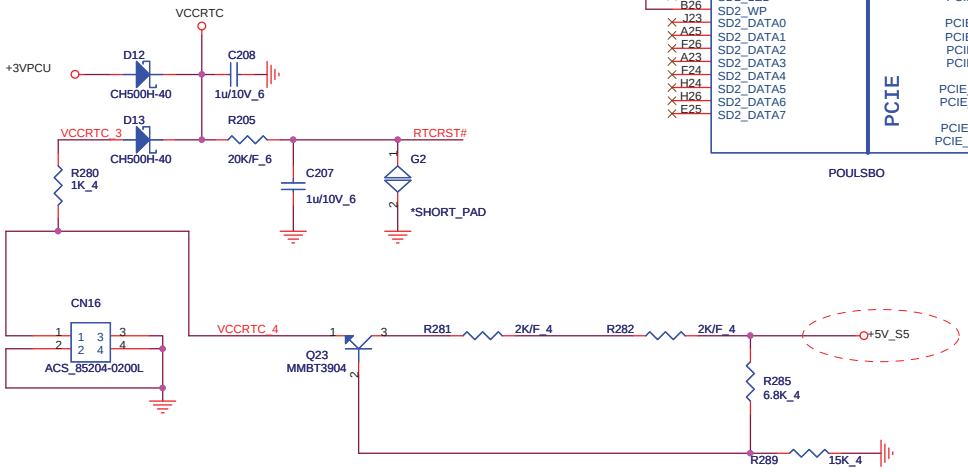

Quanta Computer Inc.

PROJECT : ZA5

Size	Document Number	Rev
	Poulsbo(02_LPC/LVDS/SDIO)	1A

Date: Thursday, April 09, 2009 Sheet 8 of 35

Poulsbo(CLG)

http://hobi-elektronika.net

0--MB USB PORT1
1--MB USB PORT2
2--DB USB PORT3
3--CCD Module
4--BT Module
5--MINI WLAN/WMAX
6--CARD READER
7--MINI 3G Module

U15C

USB I/F: USB_DN0, USB_DP0, USB_DN1, USB_DP1, USB_DN2, USB_DP2, USB_DN3, USB_DP3, USB_DN4, USB_DP4, USB_DN5, USB_DP5, USB_DN6, USB_DP6, USB_DN7, USB_DP7

USBP0- AE47, USBP0+ AE49, USBP1- AD48, USBP1+ AD50, USBP2- AB50, USBP2+ AB48, USBP3- AA49, USBP3+ AA47, USBP4- Y48, USBP4+ Y50, USBP5- V50, USBP5+ V48, USBP6- U47, USBP6+ U49, USBP7- T50, USBP7+ T48

USBOC#0_1 R43, USBOC#2 W45

USB_OC0# R43, USB_OC1# W45, USB_OC2# R45, USB_OC3# U43, USB_OC4# AA45, USB_OC5# AA43, USB_OC6# W43, USB_OC7# U45

+3V_S5: R240 10K_4, R124 10K_4

R128 22.6/F_4 USB_RBIAS_P/N: USB_RBIASN AC45, USB_RBIASP AC43

Termination Voltage: VTT_1 AW13, VTT_2 AV12, VTT_3 AU13, VTT_4 AT12, VTT_5 AR13, VTT_6 AP12, VTT_7 AN13, VTT_8 AM12, VTT_9 AL13, VTT_10 AK12, VTT_11 AJ13, VTT_12 AH12, VTT_13 AG13, VTT_14 AF12, VTT_15 AF13, VTT_17 AC13, VTT_18 AB12, VTT_19 AA13, VTT_20 Y12, VTT_21 W13, VTT_22 V12, VTT_23 U13, VTT_24 T12, VTT_25 R13, VTT_26 P12, VTT_27 N13, VTT_28 M14, VTT_29 M12, VTT_16 AD12

+1.05V: C124 1u/10V_4, C143 *1u/10V_4, C153 *1u/10V_4, C145 10u/6.3V_6

PATA/IDE: PATA_DDREQ, PATA_IORDY, PATA_IDEIRQ, PATA_DDACK#, PATA_DIOW#, PATA_DIOR#, PATA_DCS3#, PATA_DCS1#, PATA_DA2, PATA_DA1, PATA_DA0, PATA_DD15, PATA_DD14, PATA_DD13, PATA_DD12, PATA_DD11, PATA_DD10, PATA_DD9, PATA_DD8, PATA_DD7, PATA_DD6, PATA_DD5, PATA_DD4, PATA_DD3, PATA_DD2, PATA_DD1, PATA_DD0

PDDREQ J43, PIORDY D46, IRQ14 G45, PDDACK# B46, PDIOW# A37, PDIOR# F44, PDCS3# C47, PDCS1# F47

PDA2 K42, PDA1 J45, PDA0 H40

PDD15 B40, PDD14 E43, PDD13 H42, PDD12 D42, PDD11 F40, PDD10 A43, PDD9 A41, PDD8 J41, PDD7 A39, PDD6 B42, PDD5 F42, PDD4 D44, PDD3 L41, PDD2 B44, PDD1 G43, PDD0 D40

+3V: R301 4.7K_4 PIORDY, R279 10K_4 IRQ14

JTAG: TRST# N49, TMS M50, TDI K48, TDO M48, TCK N47

TRST# 4, TMS 4, BC_TDI 4, XDP_TDO 4, TCK_SCH 4

Modify JETC pins for Boundary Scan rev.b 20090205

+1.05V: BC_TDI R265 56_4, XDP_TDO R260 200_4, TMS R259 56_4, TRST# R244 1K_4, R257 *56_4, TCK_SCH R256 56_4

SYSTEM GPIOs: STPCPU# H30 — PM_STPCPU# 3

RSTRDY# H50 — PM_RSTRDY# 22

RESET# BA41, RSTWARN K50 — PLTRST# 14,17,18,19,20,22; PM_RSTWARN 22

GPIOSUS0 U41 — T45

GPIOSUS1 N43 SWI#

GPIOSUS2 N45 DNBSWON# — DNBSWON# 22

GPIOSUS3 R41 — T50

WAKE# N41 PCIE_WAKE#_R R116 *0_4 — PCIE_WAKE# 17,19

SMI# B30 EC_SMI# — EC_SMI# 22

THRMB E32 — THERM_ALERT# 4

GPE# P50 EC_SCI# — EC_SCI# 22

GPIO0 G29 SCH_GPIO0

GPIO1 K30 — T51

GPIO2 F34 — T48

GPIO3 G33 SCH_GPIO3

GPIO4 K36 — T52

GPIO5 H36 BOARD_ID0

GPIO6 F36 BOARD_ID1 — T41

GPIO7 J31 — SLPIOVR# 6

GPIO8 H34 — T53

GPIO9 K28 — T49

Change R186 R184 R309 R296 P/N from CS31002JB28 to CS21002JB34 rev.c 20090301

+3V: R316 *10K_4 BOARD_ID0, R319 10K_4 BOARD_ID1; R317 10K_4, R318 *10K_4

ID0	ID1	Functions
0	0	
0	1	SCH DPST Function
1	0	
1	1	

+3V: R186 *1K_4 SCH_GPIO3, R309 *1K_4 SCH_GPIO0; R184 *1K_4, R296 *1K_4

GPIO3	GPIO0	CMC Base Add.
0	0	FFFB000h
0	1	FFFC000h
1	0	FFFD000h(*)
1	1	FFFE000h

* : Default

XDP/ITP Debug Test Points

Change R297 from +3V_S5 to +3V for SMI# rev.c 20090304

+3V: ACZ_SDOUT_AUDIO R263 *1K_4, EC_SMI# R297 10K_4

+3V_S5: DNBSWON# R236 10K_4, PCIE_WAKE#_R R238 1K_4, EC_SCI# R245 *10K_4, SWI# R239 *10K_4

NB_CLKREQ0# R295 10K_4

For intel suggest add R295 pull down 20081218

HD AUDIO: SPKR J35 — SB_BEEP 16

HDA_CLK K14 ACZ_BITCLK_AUDIO_R R277 33_4 — ACZ_BITCLK_AUDIO 16

HDA_SYNC E13 ACZ_SYNC_AUDIO_R R283 33_4 — ACZ_SYNC_AUDIO 16

HDA_RST# A13 ACZ_RESET#_AUDIO_R R284 33_4 — ACZ_RESET#_AUDIO 16

HDA_SDI0 F14 — ACZ_SDIN0 16

HDA_SDI1 B14

HDA_SDO D14 ACZ_SDOUT_AUDIO_R R264 33_4 — ACZ_SDOUT_AUDIO 16

HDA_DOCKEN# F15 — T47

HDA_DOCKRST# H14 — T46

CLOCK I/F: RESERVED6 AU43, RESERVED7 AU45

DA_REFCLKINN AL45 — DREFCLK# 3

DA_REFCLKINP AL43 — DREFCLK 3

DB_REFCLKINNSSC AE45 — DREFCLK_SS# 3

DB_REFCLKINPSSC AE43 — DREFCLK_SS 3

CLKREQ# B28 — NB_CLKREQ0# 3

CLK14 H32 14M_SCH — 14M_SCH 3

USB_CLK48 W41

SUSCLK J47

SCH GFX Clock
SCH GFX SS Clock

SMB: SMB_ALERT# K32 SMB_ALERT# R308 10K_4 +3V

SMB_DATA G37 PDAT_SMB — PDAT_SMB 3,19

SMB_CLK H38 PCLK_SMB — PCLK_SMB 3,19

R337 10K_4, R338 10K_4 +3V

Del RN8 and Add R337 R338 to SCH SMBUS rev.c 20090301

No-Connect

POULSBO

Quanta Computer Inc.

PROJECT : ZA5

Size	Document Number	Rev
	Poulsbo(03_USB/PATA/HD)	1A

Date: Thursday, April 09, 2009 Sheet 9 of 35

Poulsbo(CLG)

http://hobi-elektronika.net

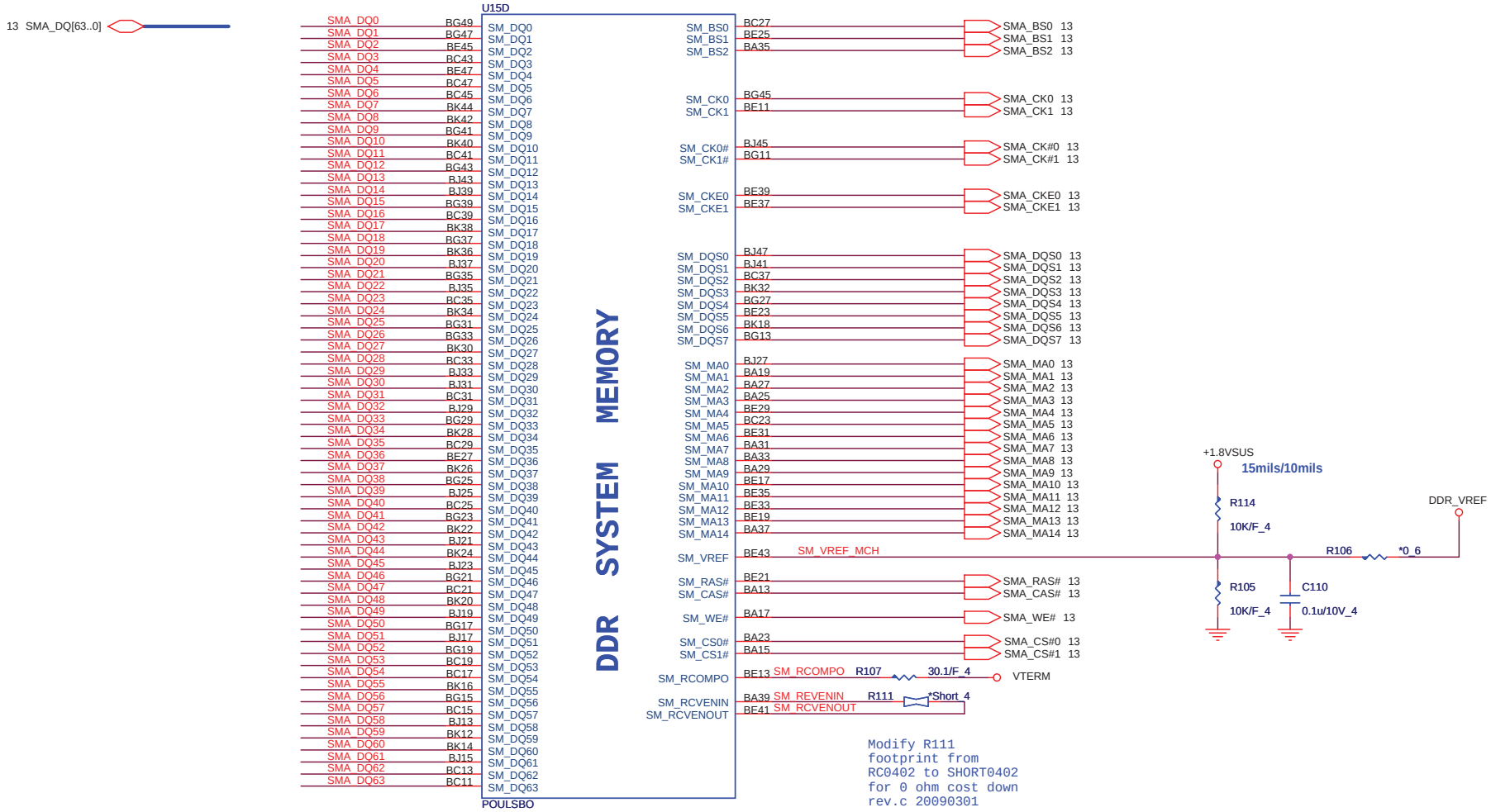

Quanta Computer Inc.		
PROJECT : ZA5		
Size	Document Number: Poulsbo(04_MEM)	Rev 1A
Date: Thursday, April 09, 2009	Sheet 10 of 35	

http://hobi-elektronika.net

Poulsbo(CLG)

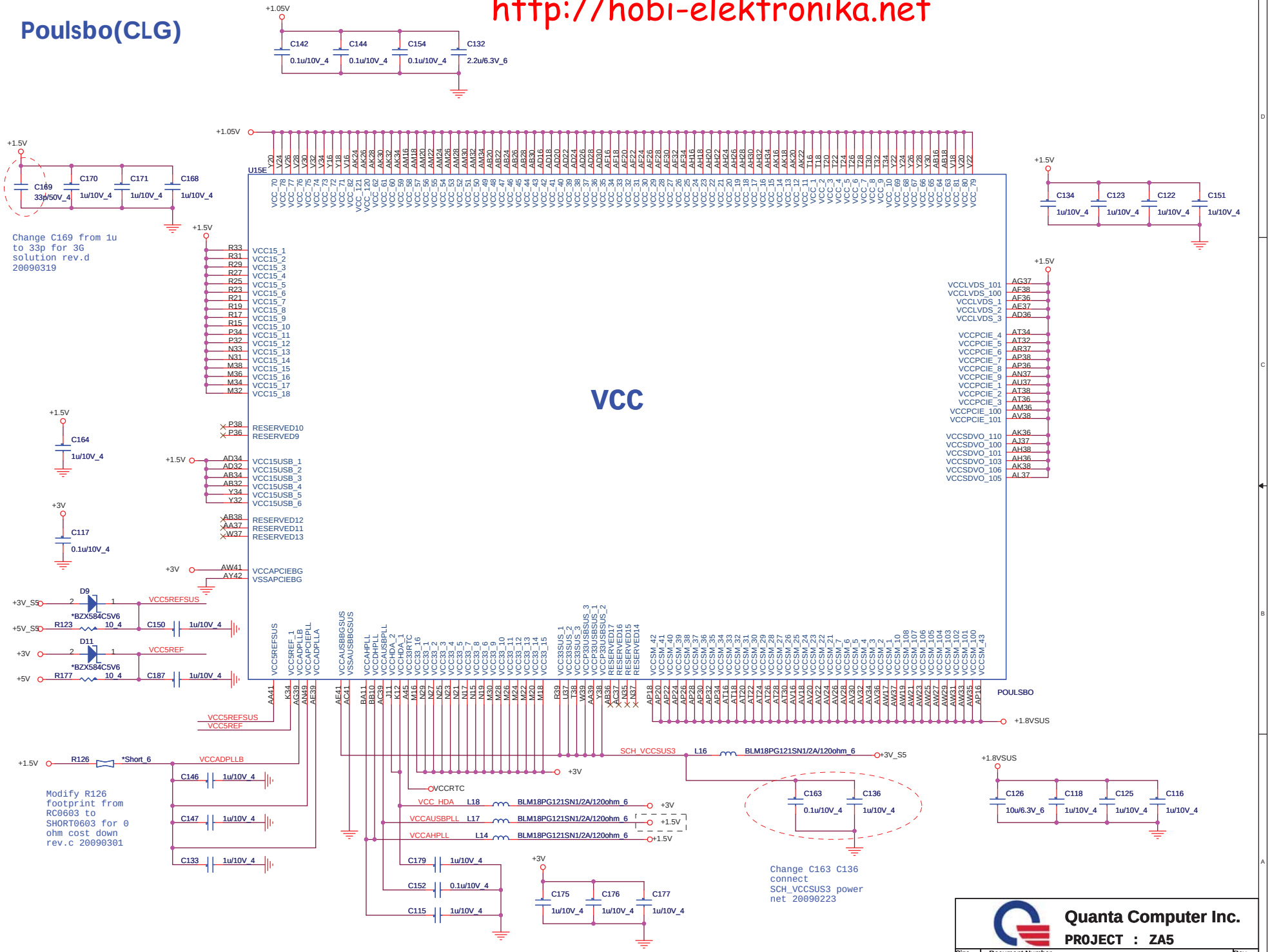

Quanta Computer Inc.			
PROJECT : ZA5			
Size	Document Number: Poulsbo(05_Power)		Rev 1A
Date: Thursday, April 09, 2009		Sheet 11 of 35	

Poulsbo(CLG)

http://hobi-elektronika.net

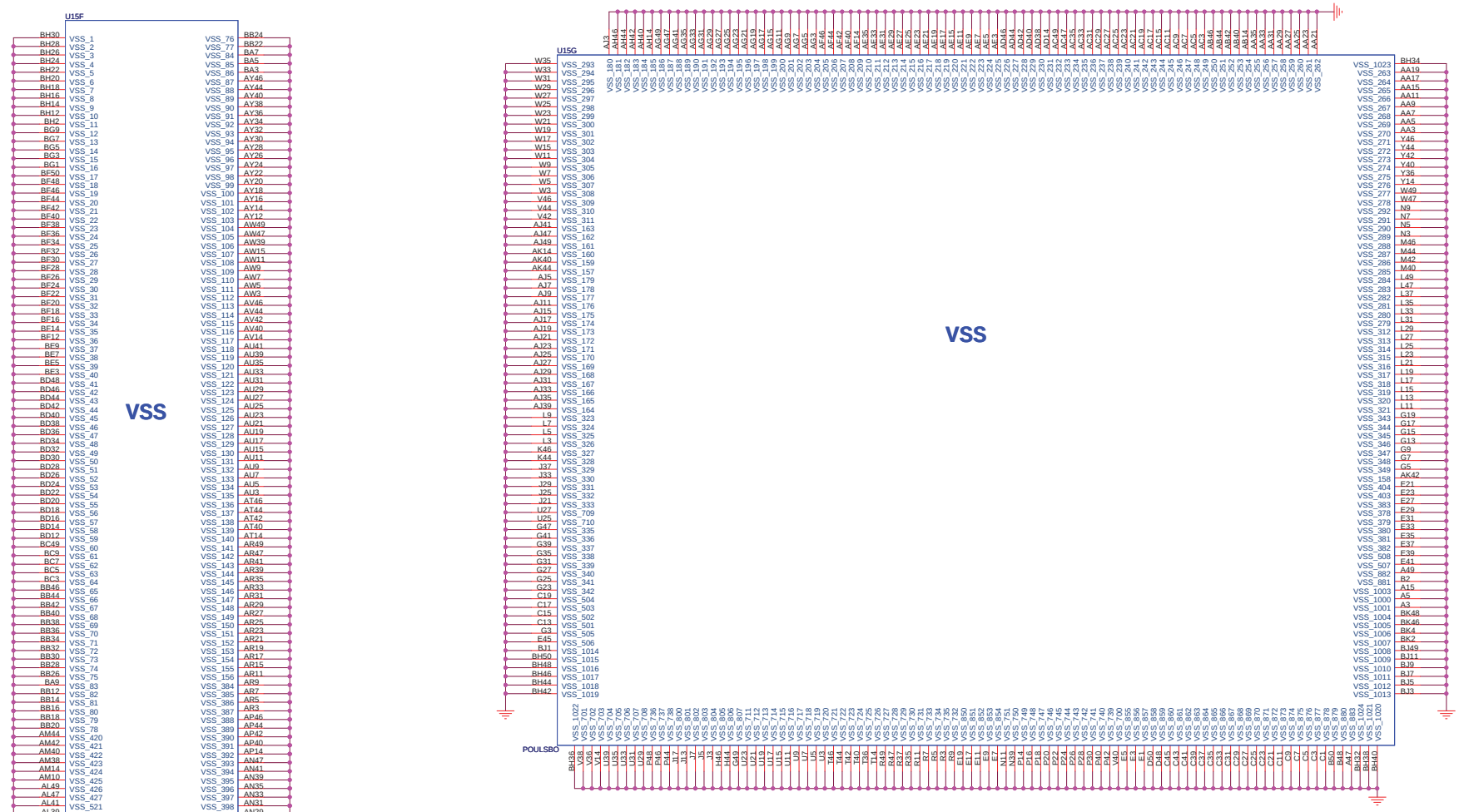

Quanta Computer Inc.	
PROJECT : ZA5	
Size	Document Number: Poulsbo(06_GND)
Rev	1A
Date: Thursday, April 09, 2009	Sheet 12 of 35

SO-DIMM(DDR)

http://hobi-elektronika.net

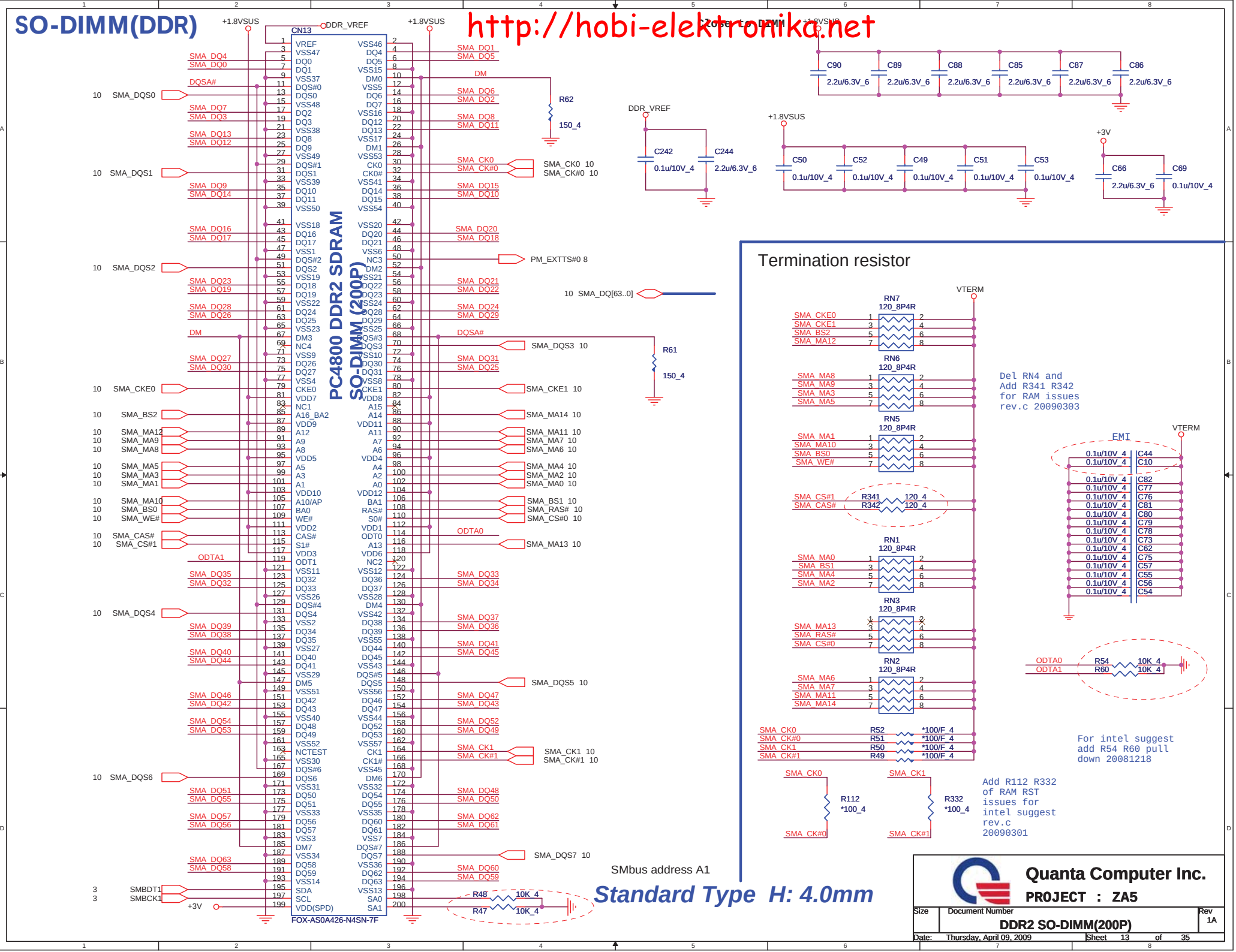

SDVO To CRT(CRT)

http://hobi-elektronika.net

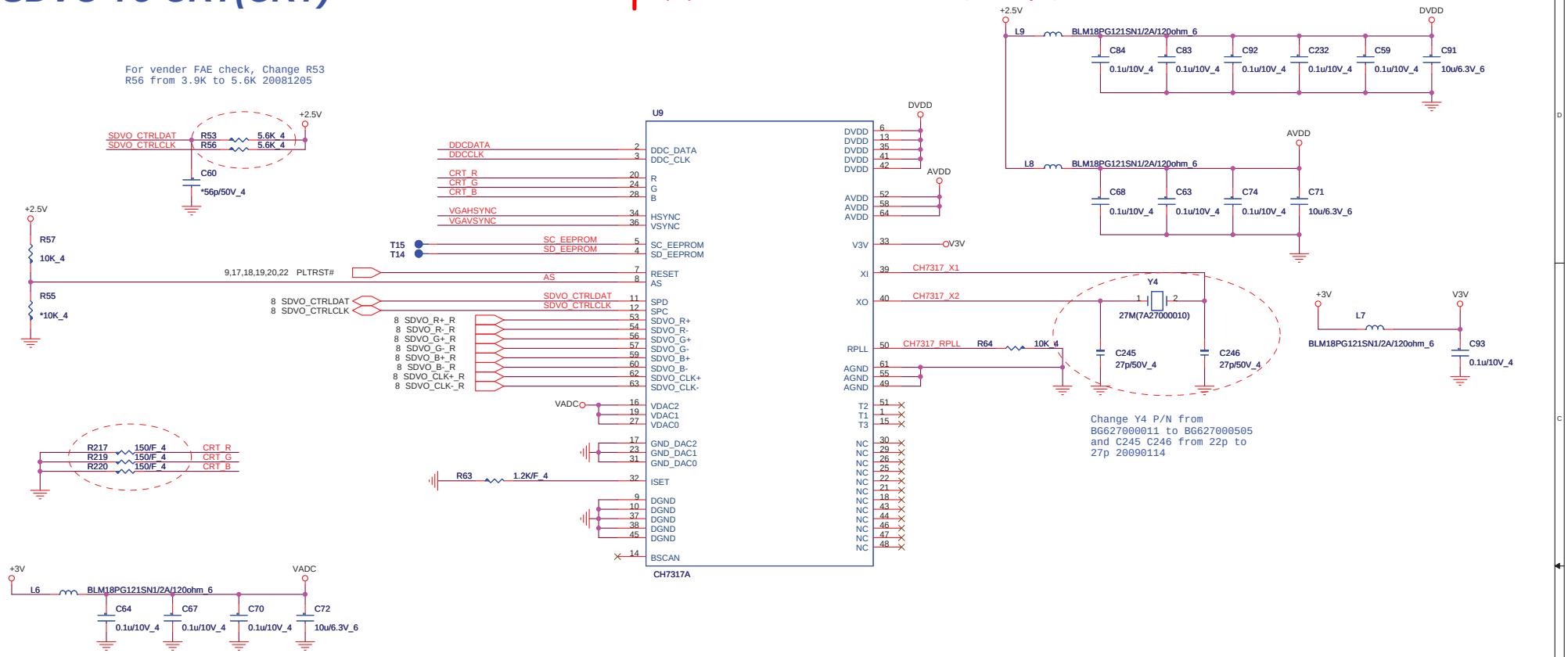

CRT DB CONNECTER(CRT)

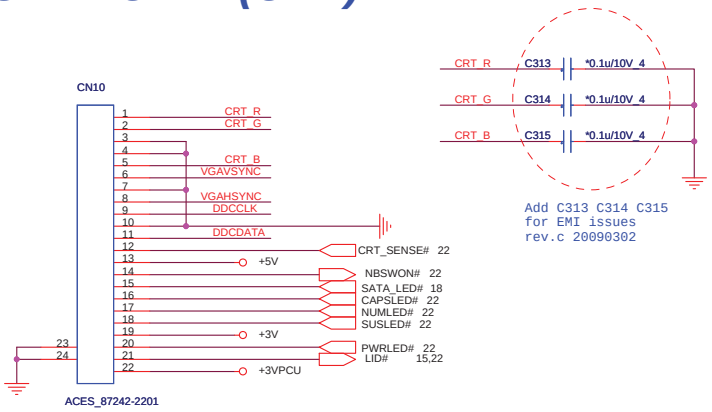

Quanta Computer Inc.

PROJECT : ZA5

Size	Document Number	Rev
	SDVO TO CRT(CH7317A)	1A

Date: Thursday, April 09, 2009 Sheet 14 of 35

http://hobielektronika.net

Backlight Control(LDS)

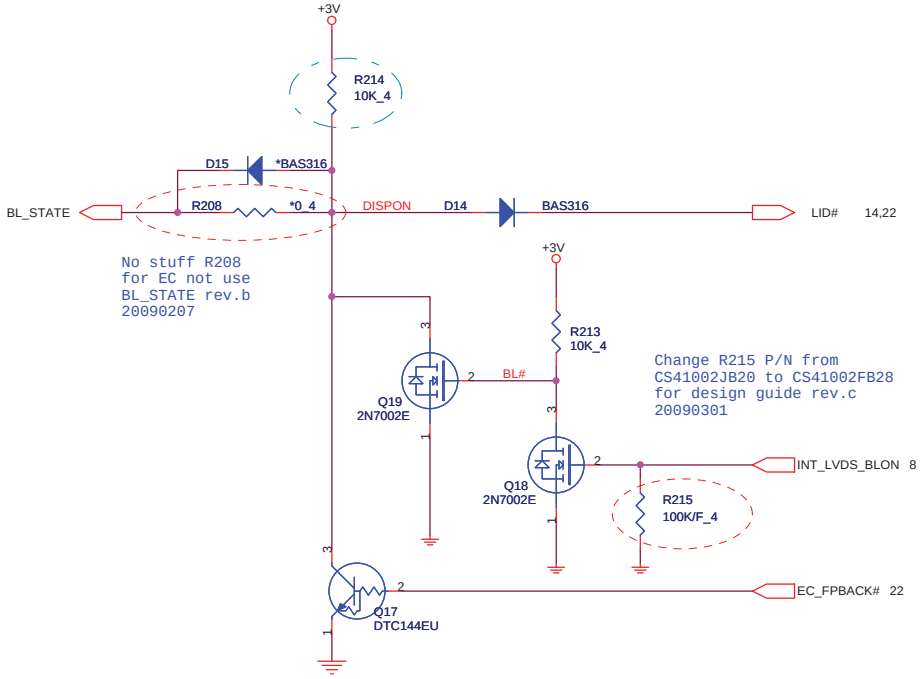

LED Panel(LDS)

V_BLIGHT : ?V ?A

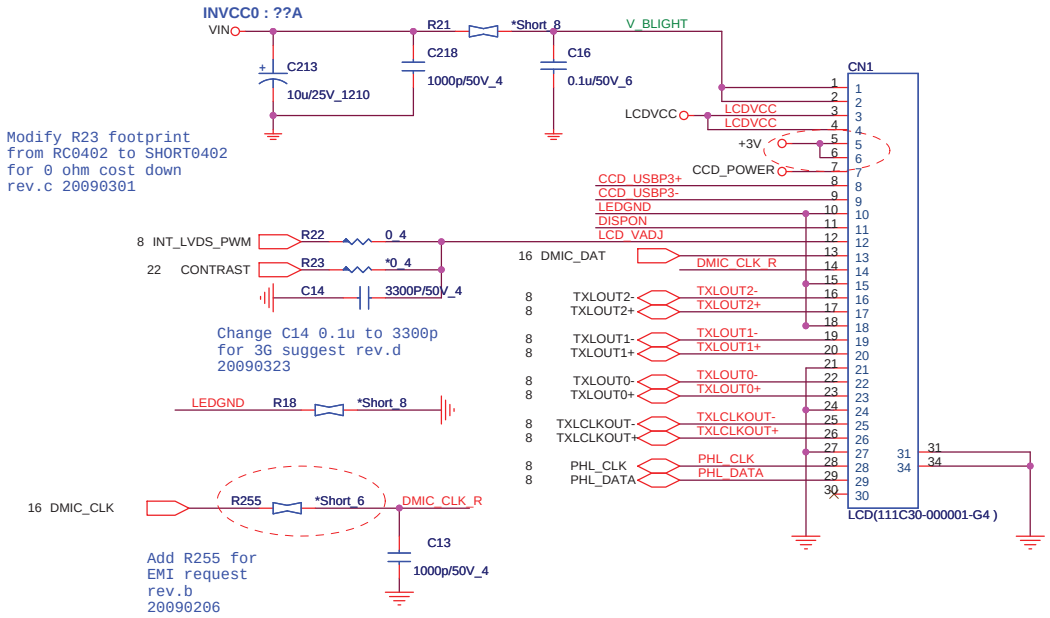

LED Panel POWER SWITCH(LDS)

Change C217 0.01u
to 33p for 3G
suggest rev.d
20090323

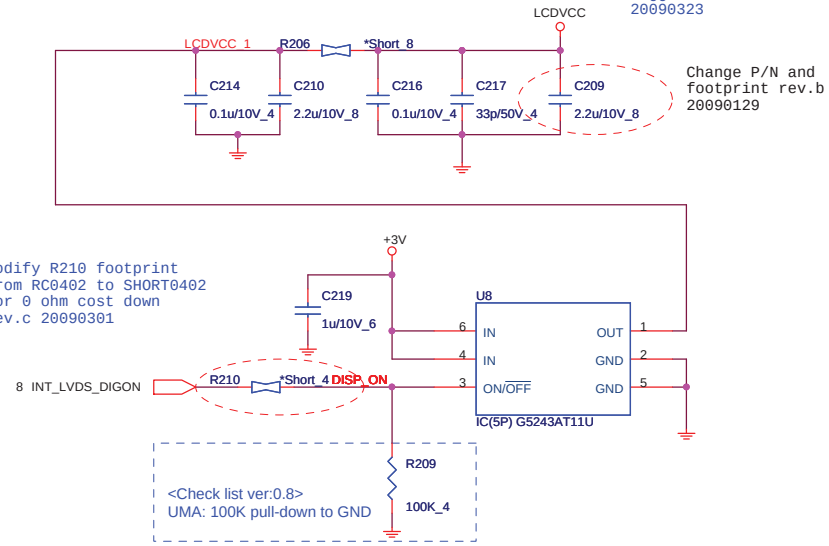

Camera(CCD)

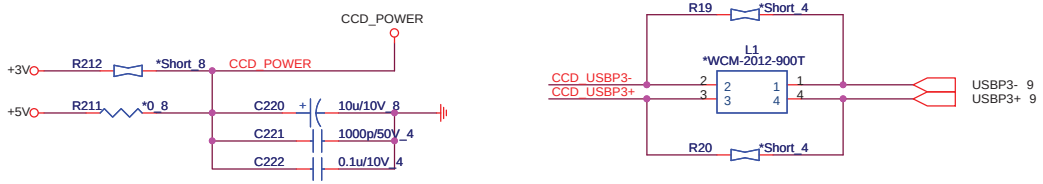

Quanta Computer Inc.		
PROJECT : ZA5		
Size	Document Number: LED PANEL/CCD MODULE	Rev 1A
Date: Thursday, April 09, 2009	Sheet 15 of 35	

http://hobi-elektronika.net

CODEC(ADO)

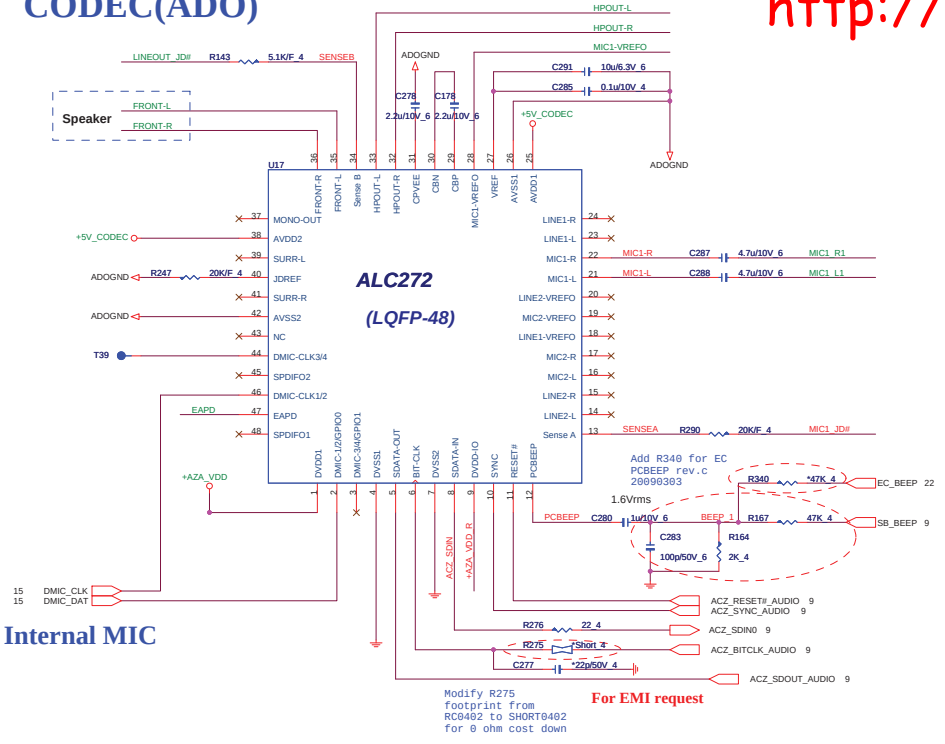

Internal MIC

Codec Power(ADO)

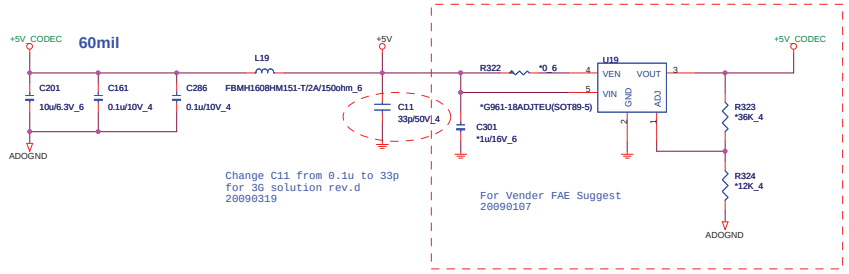

HDA Power(ADO)

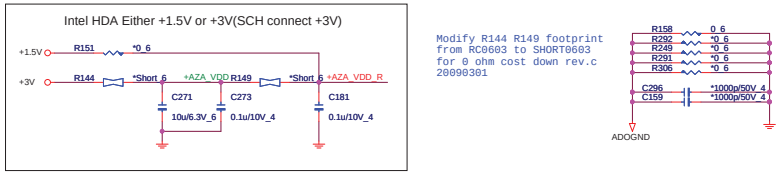

HP_Green(AMP)

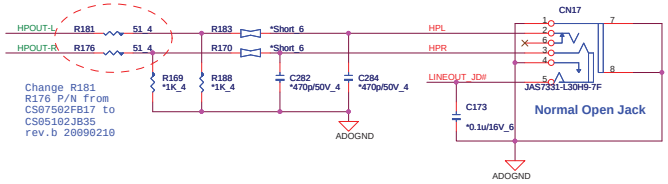

HP_Green ESD(EMC)

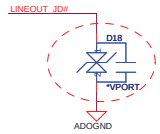

Speaker Amplifier(AMP)

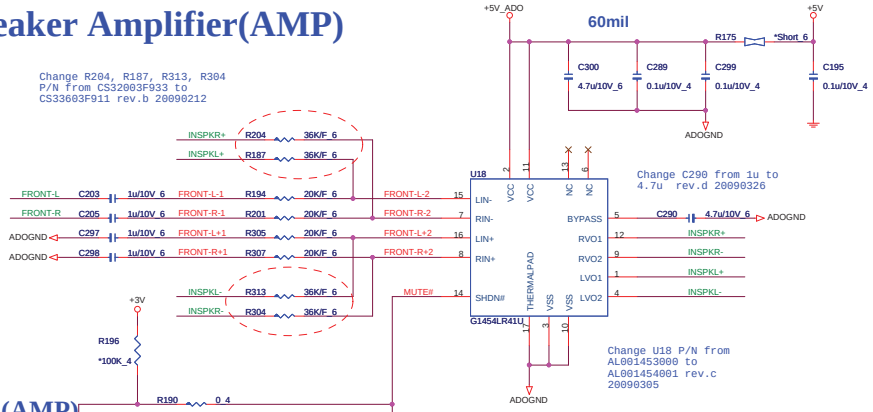

MUTE(AMP)

System MIC_Pink(AMP)

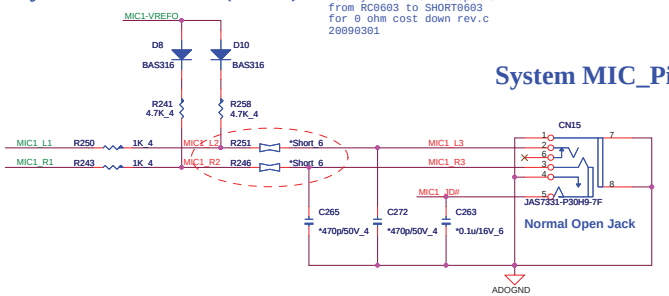

System MIC_Pink ESD(EMC)

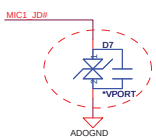

Speaker(AMP)

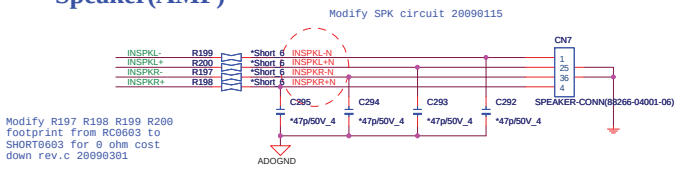

Quanta Computer Inc.		
PROJECT : ZA5		
Size	Document Number: AL272/AMP/MIC/LINE-OUT	Rev 1A
Date: Thursday, April 09, 2009	Sheet 16 of 35	

LAN RTL8103EL (LAN)

http://hobi-elektronika.net

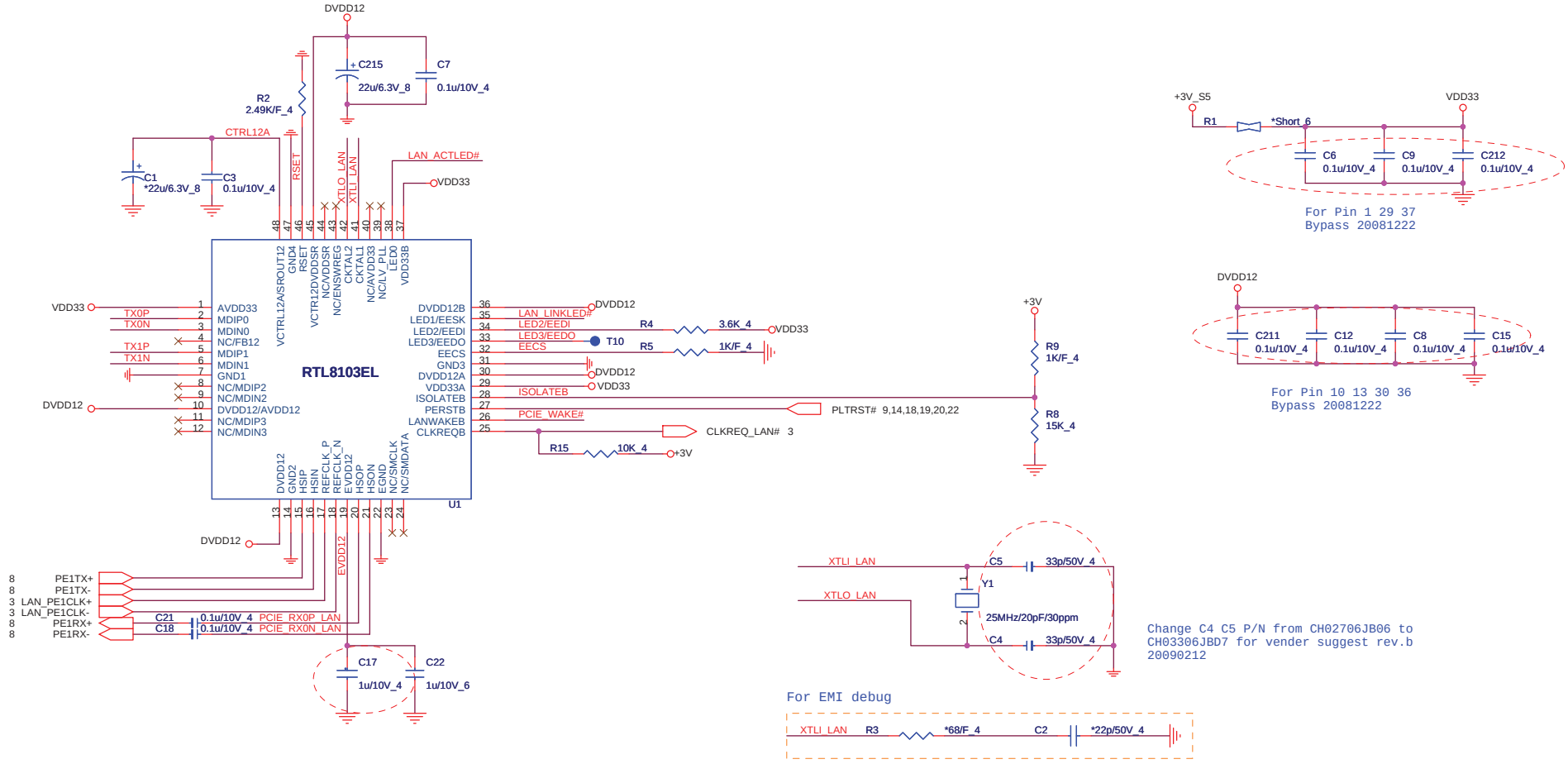

Change C4 C5 P/N from CH02706JB06 to CH03306JBD7 for vender suggest rev.b 20090212

For EMI debug

LAN D/B CONNECTER(LAN)

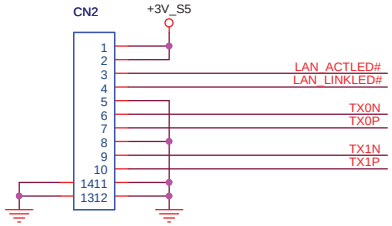

LAN CONN(88501-120N)

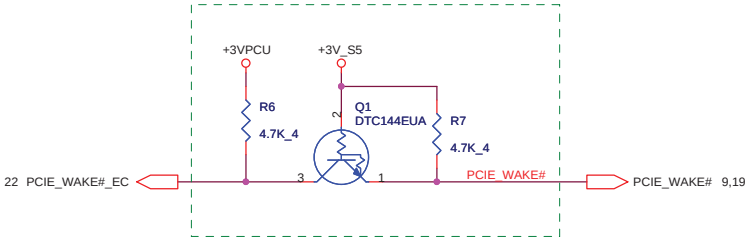

Quanta Computer Inc.

PROJECT : ZA5

Size	Document Number	Rev
	LAN RTL8103EL	C

Date: Thursday, April 09, 2009 Sheet 17 of 35

http://hobi-elektronika.net

PATA TO SATA BRIDGE(HDD)

Bypass CAP must place close to power pins

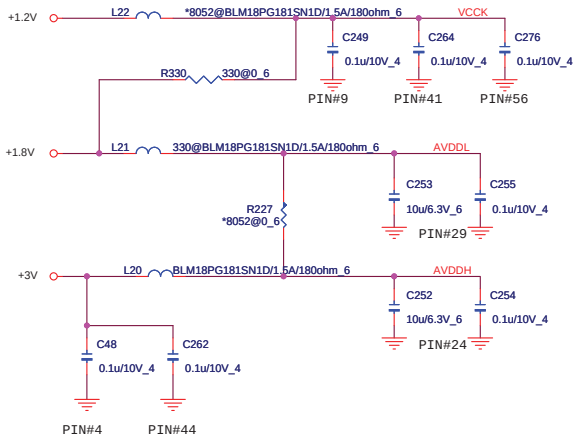

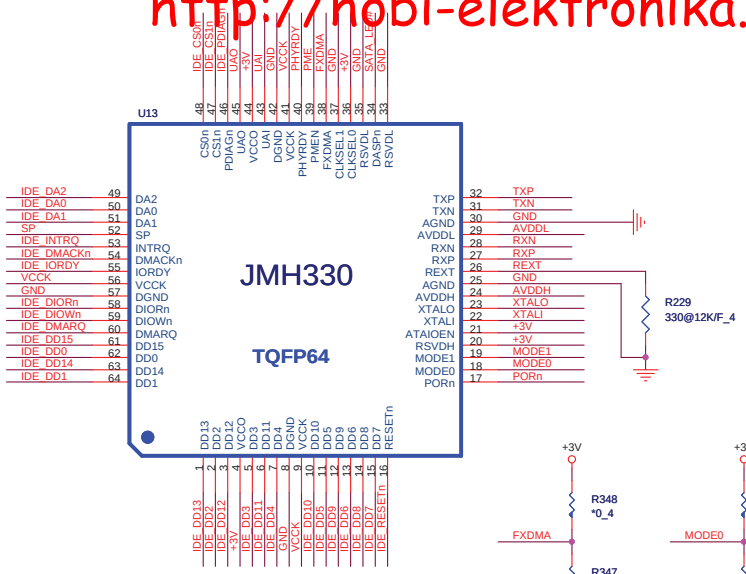

2.5" SATA HDD OR SSD(TOSHIBA)

SATA ESD(EMC)

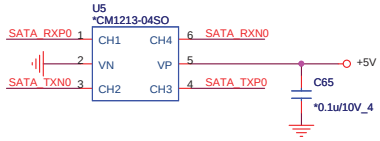

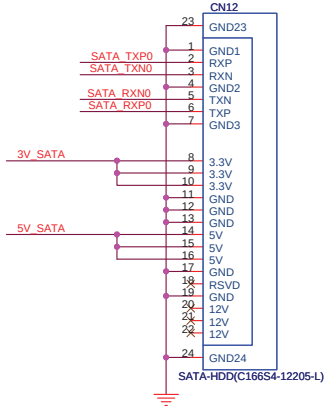

Close to SATA Connecter

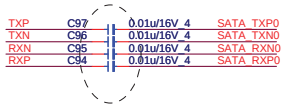

SATA POWER(HDD)

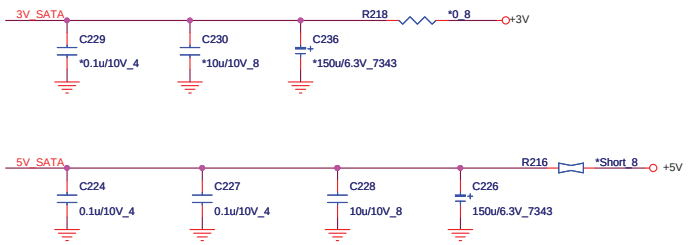

PME

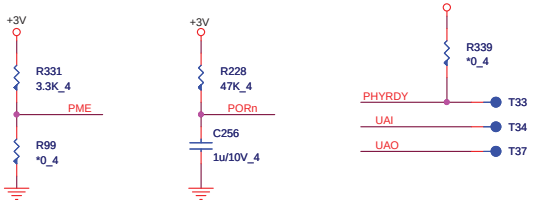

Stuff R331 by 3.3k ohm and remove R99(enable PME of PATA to SATA bridge)

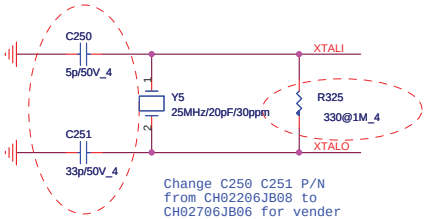

Add R325 for JMH330 XTAL issues 20090113

Change C250 C251 P/N from CH02206JB08 to CH02706JB06 for vender suggest rev.b 20090212

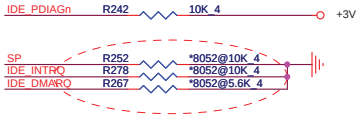

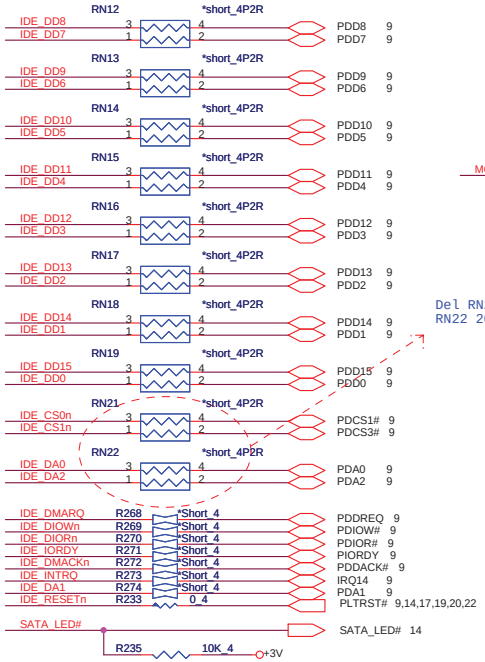

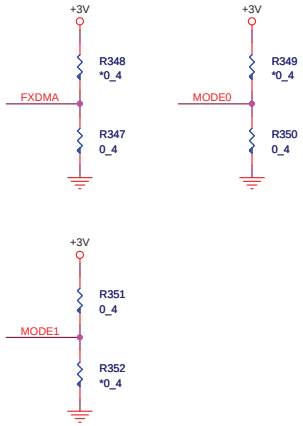

Del RN20 and add RN21 RN22 20090113

	JMH330 (AJ003300H00)	88SA8052 (AJ080520H00)
Stuff	L21 R330 R325	L22 R227
No Stuff	L22 R227	L21 R330 R325
Change	R229 = 12K C250 = 5P C251 = 33P	R229 = 6.04K C250 = 27P C251 = 27P

For JMicron FAE Check : Can chenge RN20 R269 R270 R272 R274 from 82ohm to 0ohm, R268 R271 R273 from 22ohm to 0ohm, RN12 RN13 RN14 RN15 RN16 RN17 RN18 RN19 R233 from 33ohm to 0ohm 20081223

Quanta Computer Inc.

PROJECT : ZA5

Size	Document Number	Rev
	PATA TO SATA BRIDGE(88SA8052)	1A

Date: Thursday, April 09, 2009 Sheet 18 of 35

Mini Card1-WLAN/WMAX(MPC)

http://hobi-elektronika.net

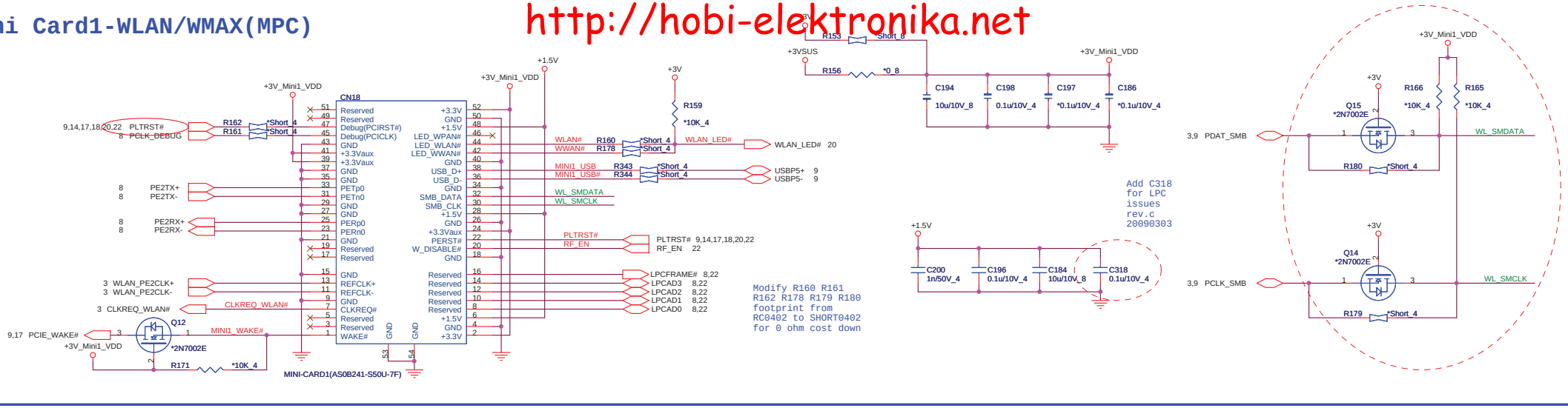

Mini Card2-3G(MNC)

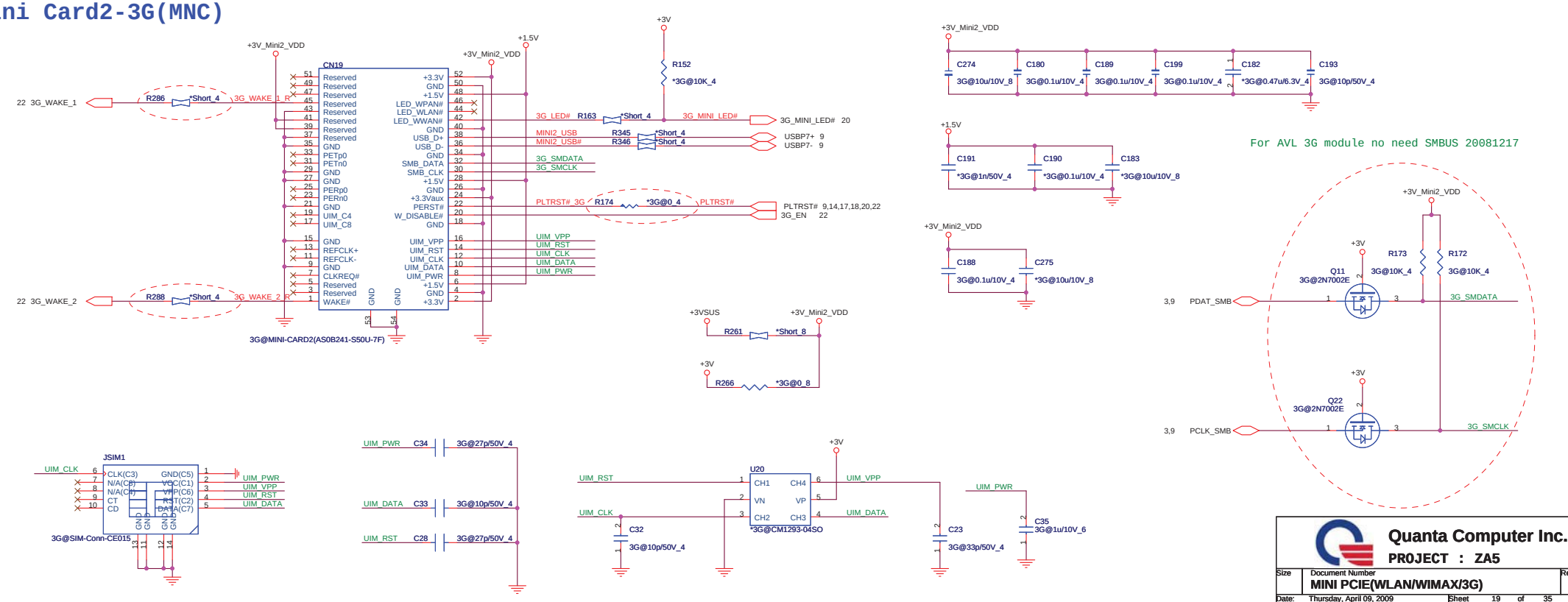

Quanta Computer Inc.		
PROJECT : ZA5		
Size	Document Number: MINI PCIE(WLAN/WIMAX/3G)	Rev 1A
Date: Thursday, April 09, 2009	Sheet 19 of 35	

MB USB PORTS(USB)

http://hobi-elektronika.net

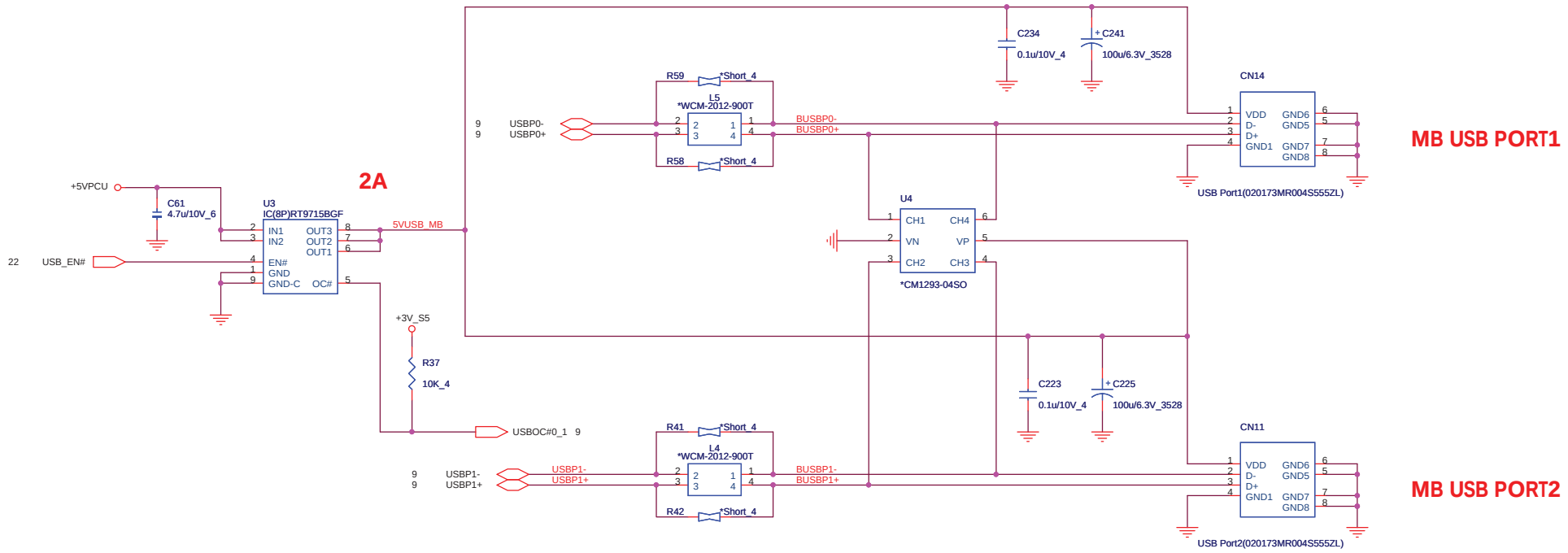

LED DB CONNECTER(UIF)

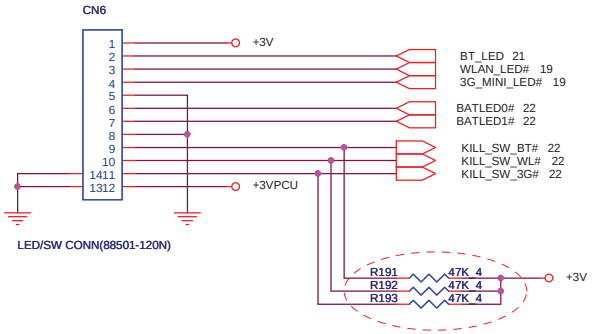

EC GPIO	Button
KILL_SW_WL#(GPIO57 PIN33)	WLAN Switch
KILL_SW_3G#(GPIO60 PIN34)	3G Switch
KILL_SW_BT#(GPIO12 PIN13)	BT Switch

Card Reader/USB DB CONNECTER(MMC)

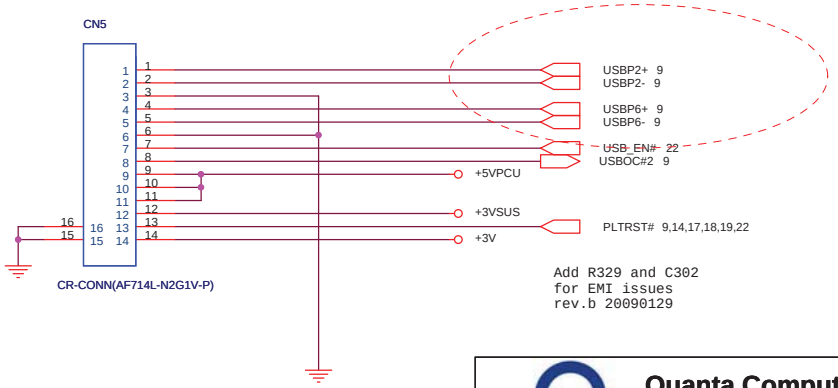

Add R329 and C302
for EMI issues
rev.b 20090129

Quanta Computer Inc.

PROJECT : ZA5

Size	Document Number	Rev
	USB/SD_LED AND CR_USB DB	1A

Date: Thursday, April 09, 2009 Sheet 20 of 35

http://hobi-elektronika.net

Keyboard(KBC)

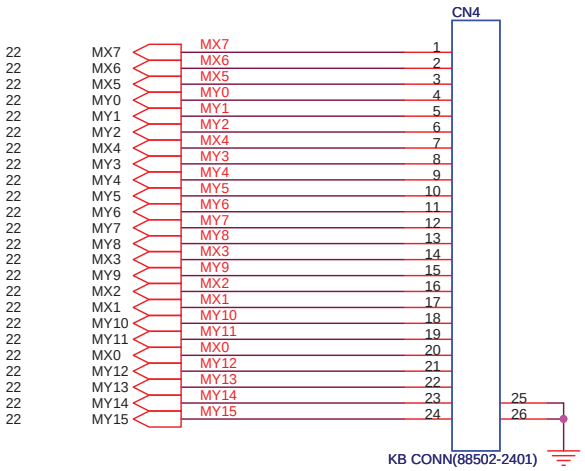

For EMI Reserve Caps for debug

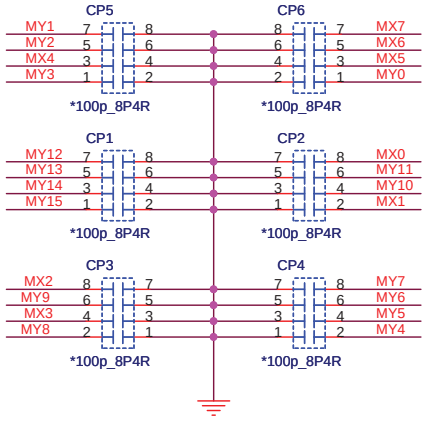

BT CONNECTOR(BTM)

Modify CN8 footprint and pin define rev.c 20090301

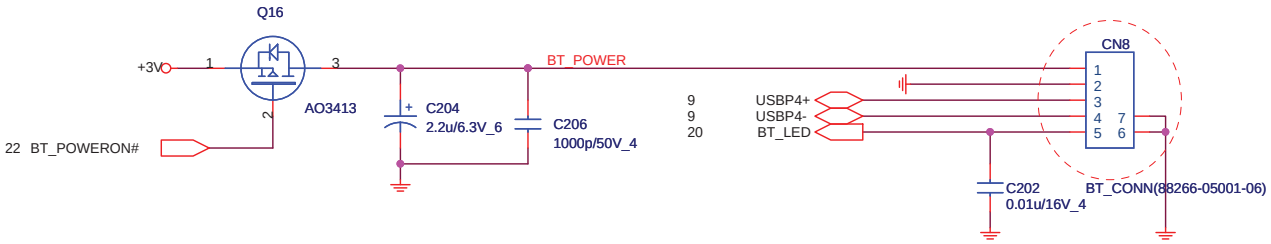

TO DB CONNECTOR(TPD)

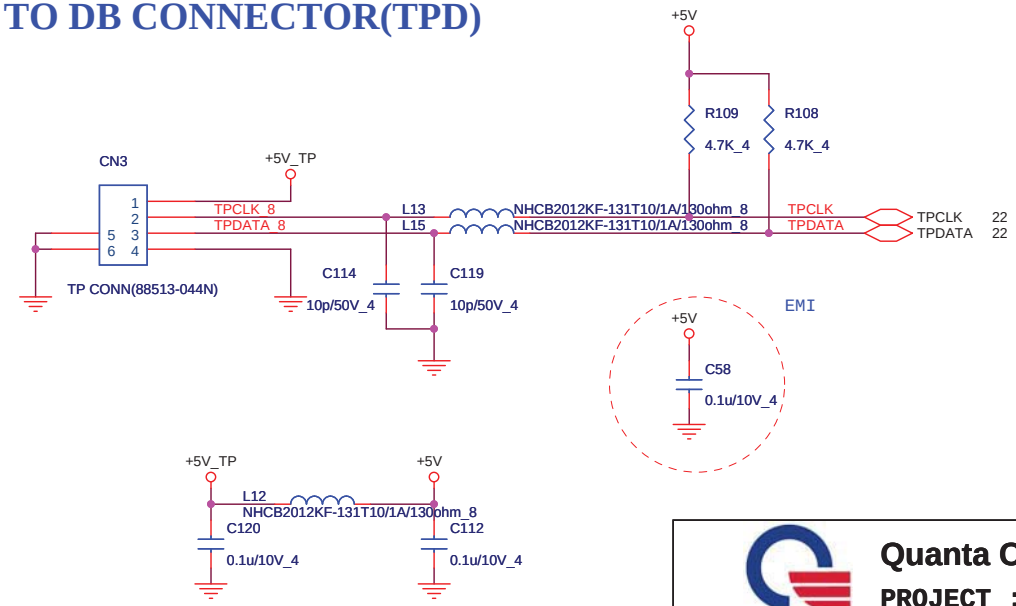

Quanta Computer Inc.

PROJECT : ZA5

Size	Document Number	Rev
	KB/BT/TP	1A

Date: Thursday, April 09, 2009 Sheet 21 of 35

EC(KBC)

http://hobi-elektronika.net

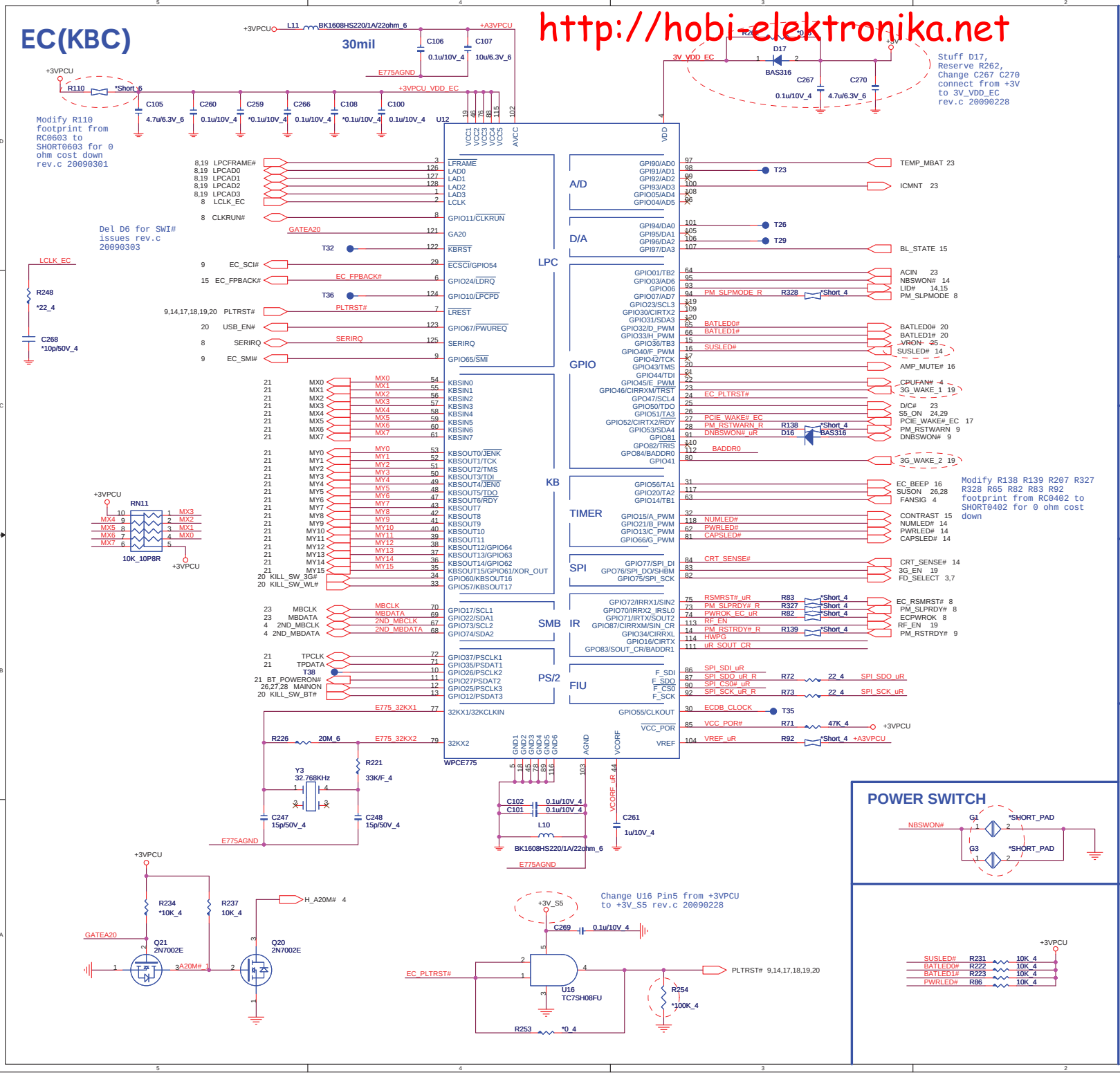

I/O ADDRESS SETTING

	I/O Address	
BADDR1-0	Index	Data
0 0	XOR TREE TEST MODE	
0 1	CORE DEFINED	
1 0	2Eh	2Fh
1 1	164Eh	164Fh

SHBM=0: Enable shared memory with host BIOS

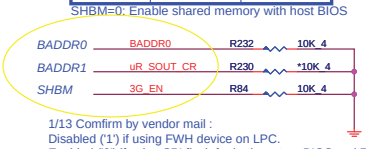

1/13 Comfirm by vendor mail :
Disabled ('1') if using FWH device on LPC.
Enabled ('0') if using SPI flash for both system BIOS and EC firmware

SM BUS PU

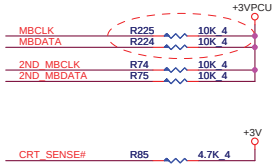

ACER ID

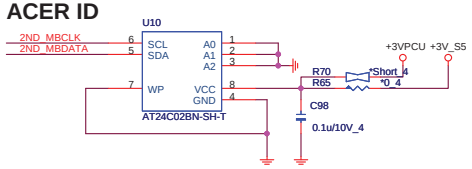

SPI FLASH

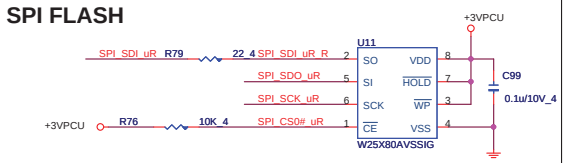

1/13 Comfirm by vendor mail :
If the Southbridge enables 'Long Wait Abort' by default, the flash device should be 50MHz (or faster)

HWPG

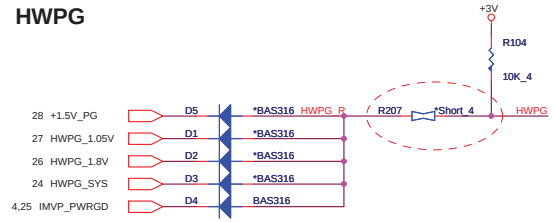

POWER SWITCH

INTERNAL KEYBOARD STRIP SET

Quanta Computer Inc.

PROJECT : ZA5

Size	Document Number	Rev
	WPCE775C/FLASH	1A

Date: Thursday, April 09, 2009 Sheet 22 of 35

http://hobi-elektronika.net

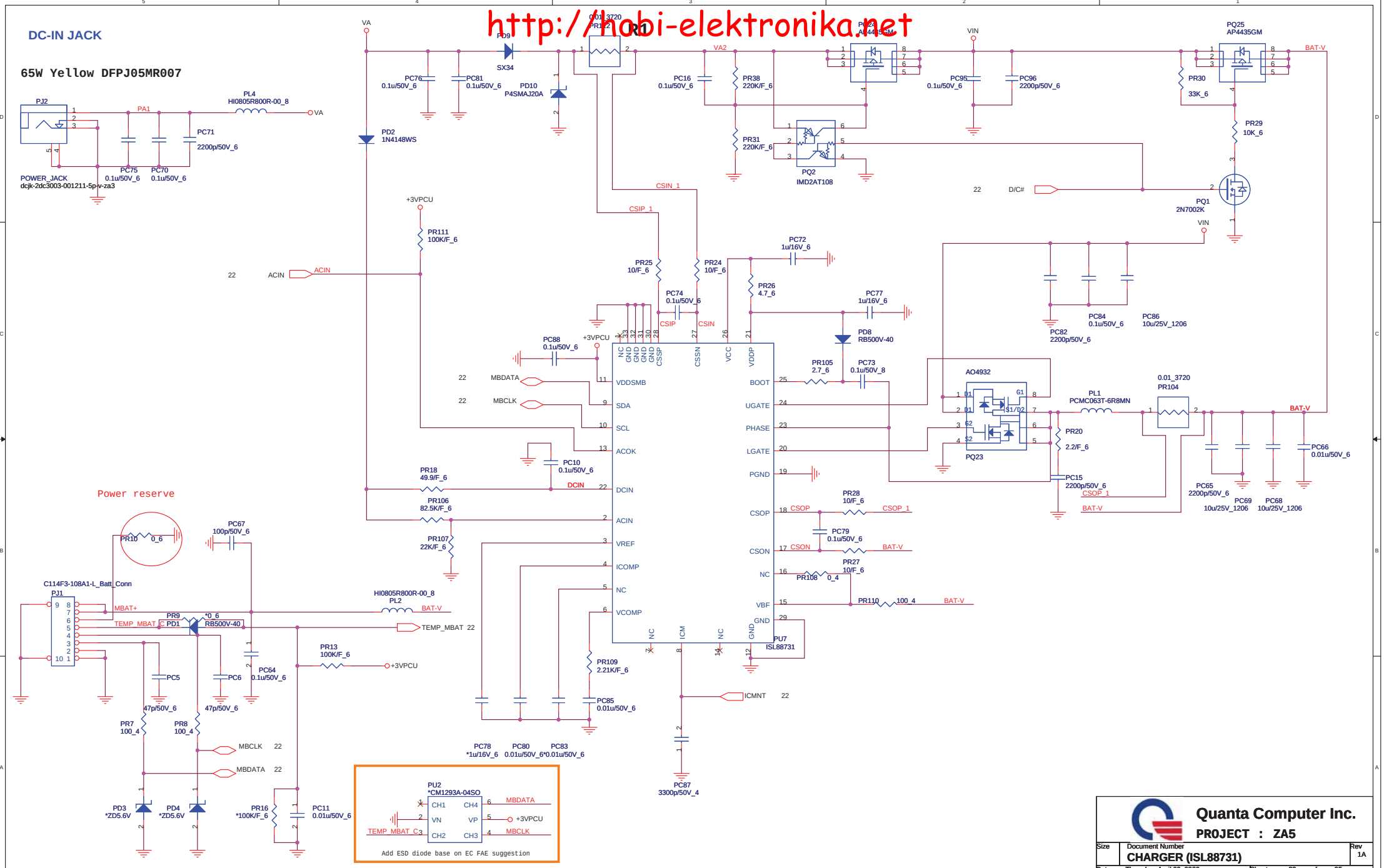

http://hobi-elektronika.net

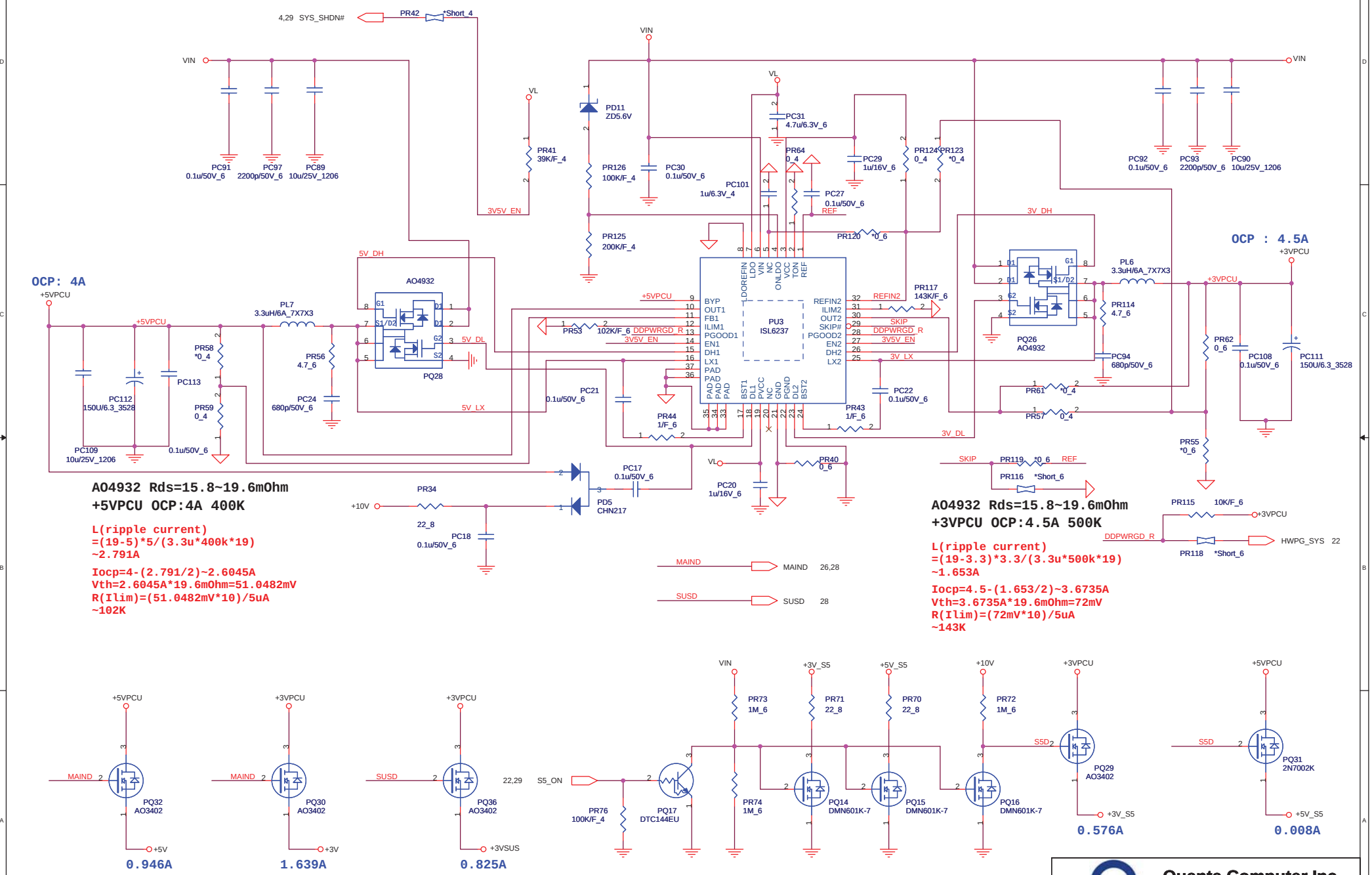

Quanta Computer Inc.

PROJECT : ZA5

Size	Document Number	Rev
	SYSTEM 5V/3V (ISL6237)	1A

Date: Thursday, April 09, 2009 Sheet 24 of 35

http://hobi-elektronika.net

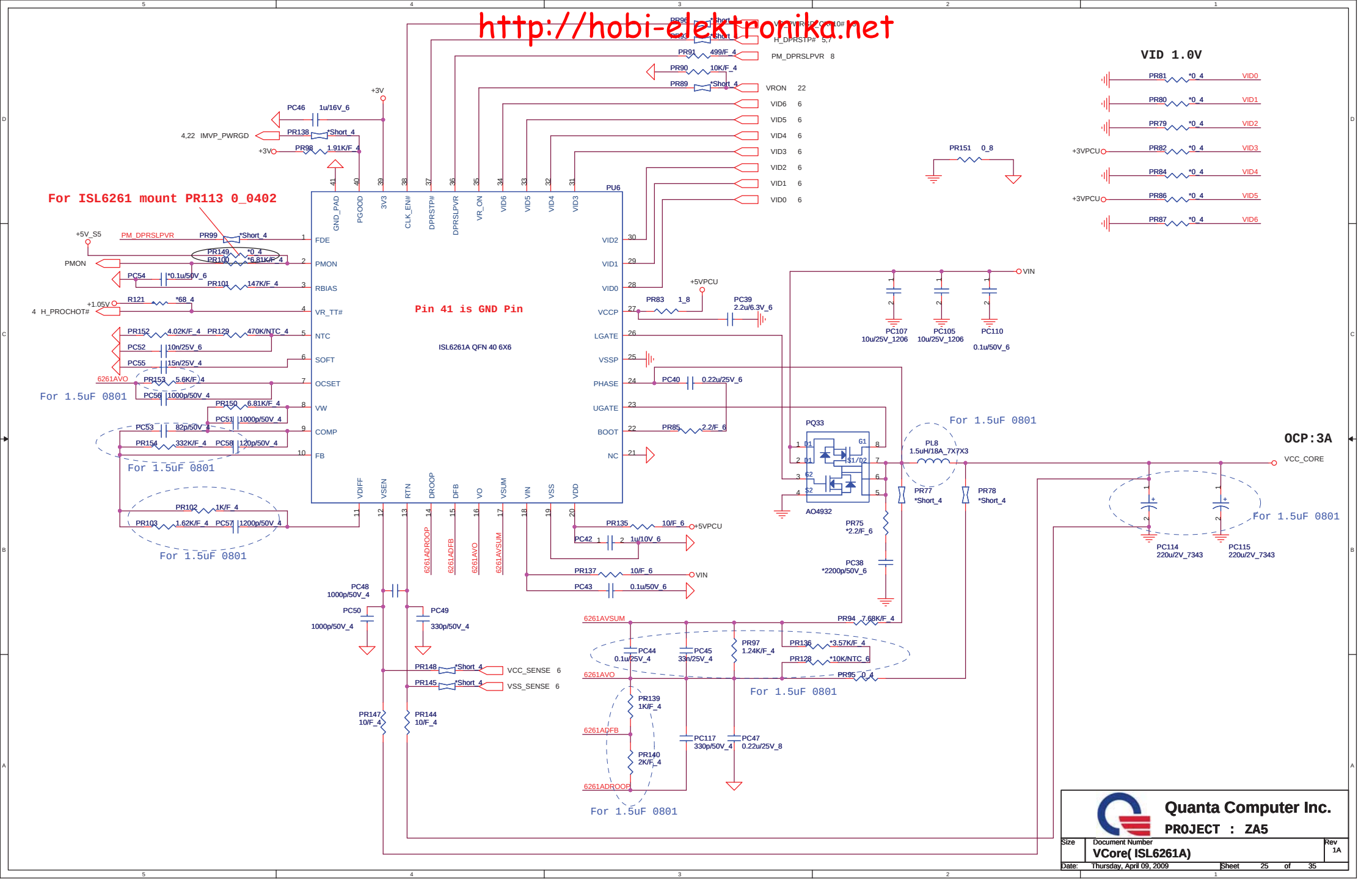

http://hobi-elektronika.net

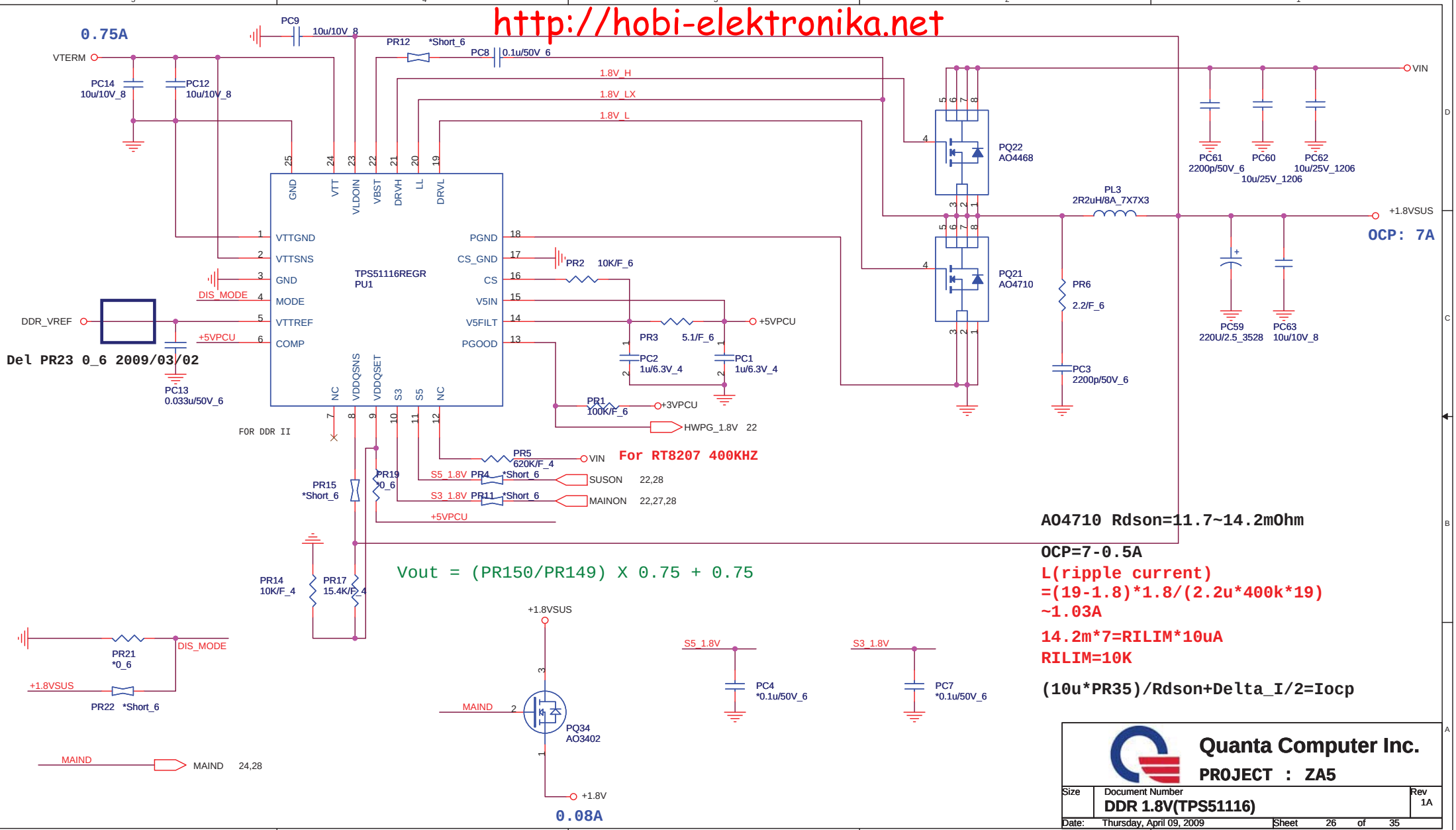

AO4710 Rdson=11.7~14.2mOhm

OCP=7-0.5A

L(ripple current)
=(19-1.8)*1.8/(2.2u*400k*19)
~1.03A

14.2m*7=RILIM*10uA
RILIM=10K

(10u*PR35)/Rdson+Delta_I/2=Iocp

Quanta Computer Inc.		
PROJECT : ZA5		
Size	Document Number DDR 1.8V(TPS51116)	Rev 1A
Date: Thursday, April 09, 2009	Sheet 26 of 35	

http://hobi-elektronika.net

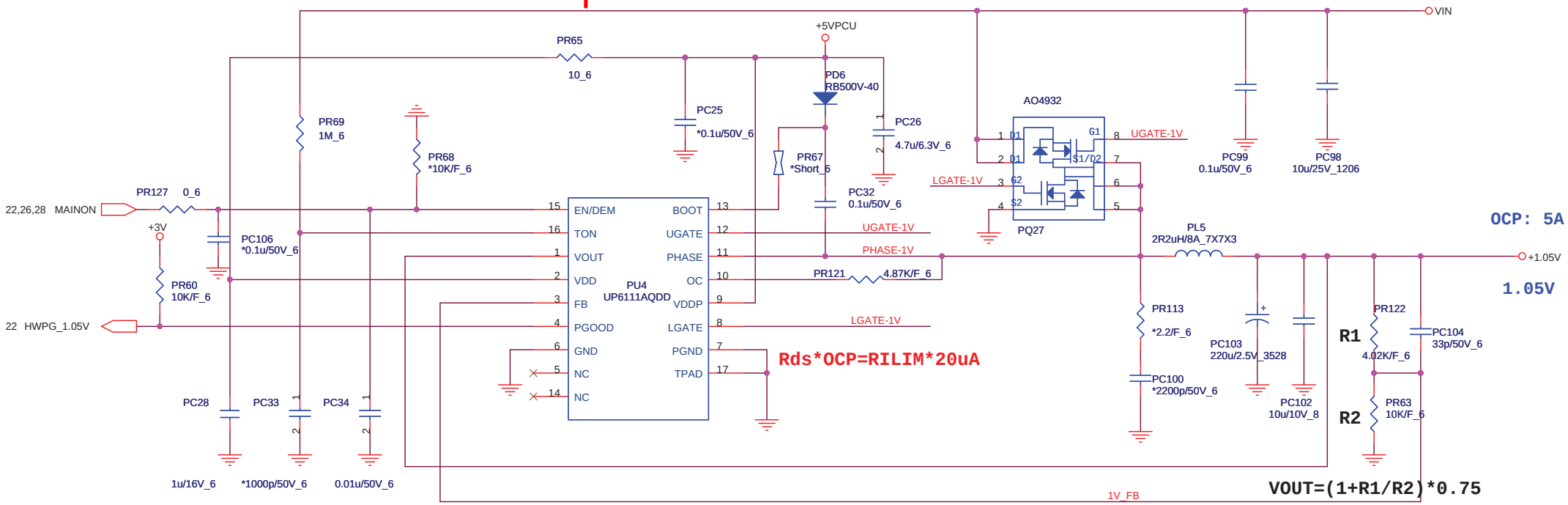

TON=3.85p*RTON*Vout/(Vin-0.5)

Frequency=Vout/(Vin*TON)

TON=3.85p*1M*1/(Vin-0.5)

Frequency=1/(0.0036767)=272K

AO4932 Rdson=15.8~19.6mOhm
OCP=7.2-0.8A
L(ripple current)
=(19-1.05)*1.05/(3.3u*272k*19)
~1.105A

19.6m*5=RILIM*20uA
RILIM=4.9K(4.87K)

Quanta Computer Inc.		
PROJECT : ZA5		
Size	Document Number: VCCP 1.05V(UP6111AQDD)	Rev 1A
Date: Thursday, April 09, 2009	Sheet 27 of 35	

http://hobi-elektronika.net

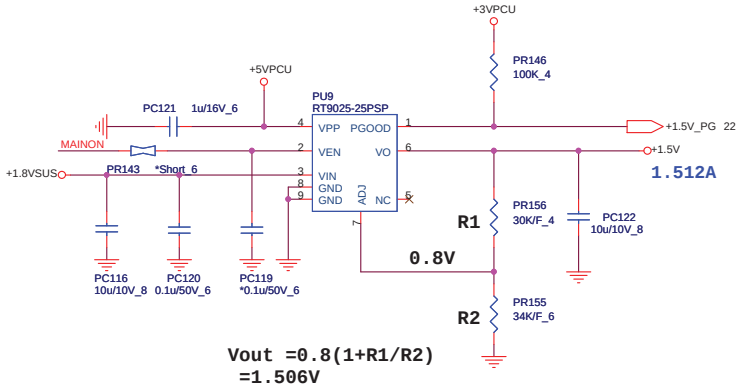

Vout =0.8(1+R1/R2)
=1.506V

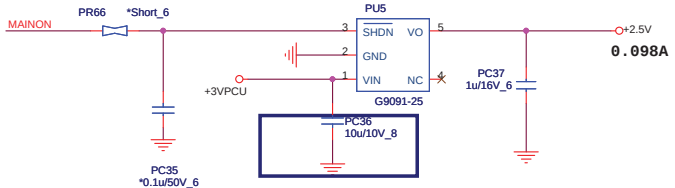

Change PC36 from 2.2u/10V_6 to 10u/10V_8 2009/03/02

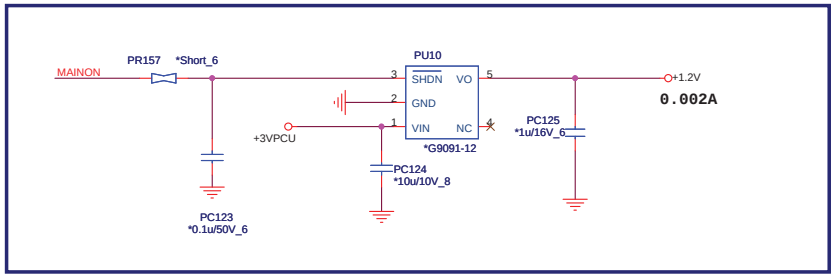

Addition +1.2v LDO 2009/03/02

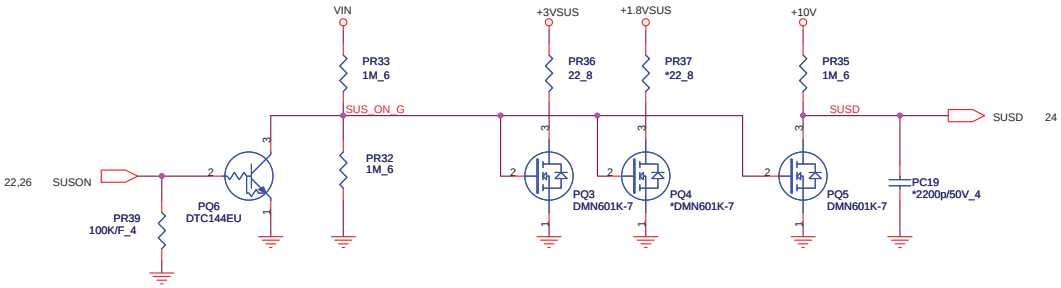

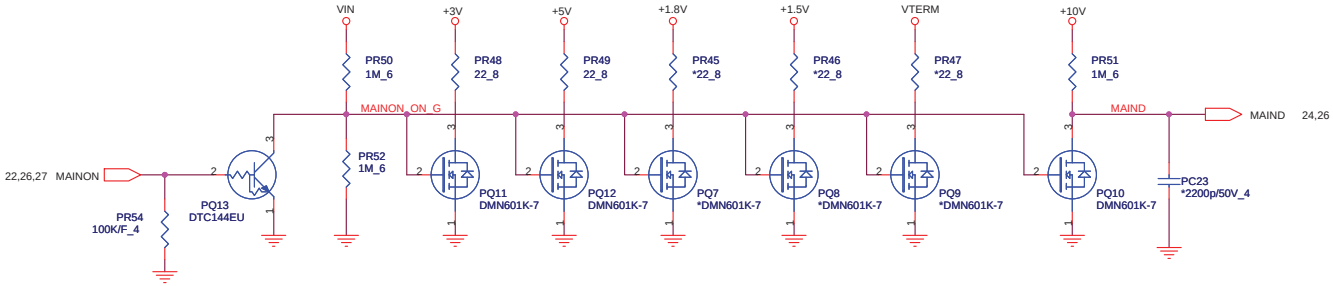

Quanta Computer Inc.		
PROJECT : ZA5		
Size	Document Number: Discharge/1.5/2.5V	Rev 1A
Date: Thursday, April 09, 2009	Sheet 28 of 35	

http://hobi-elektronika.net

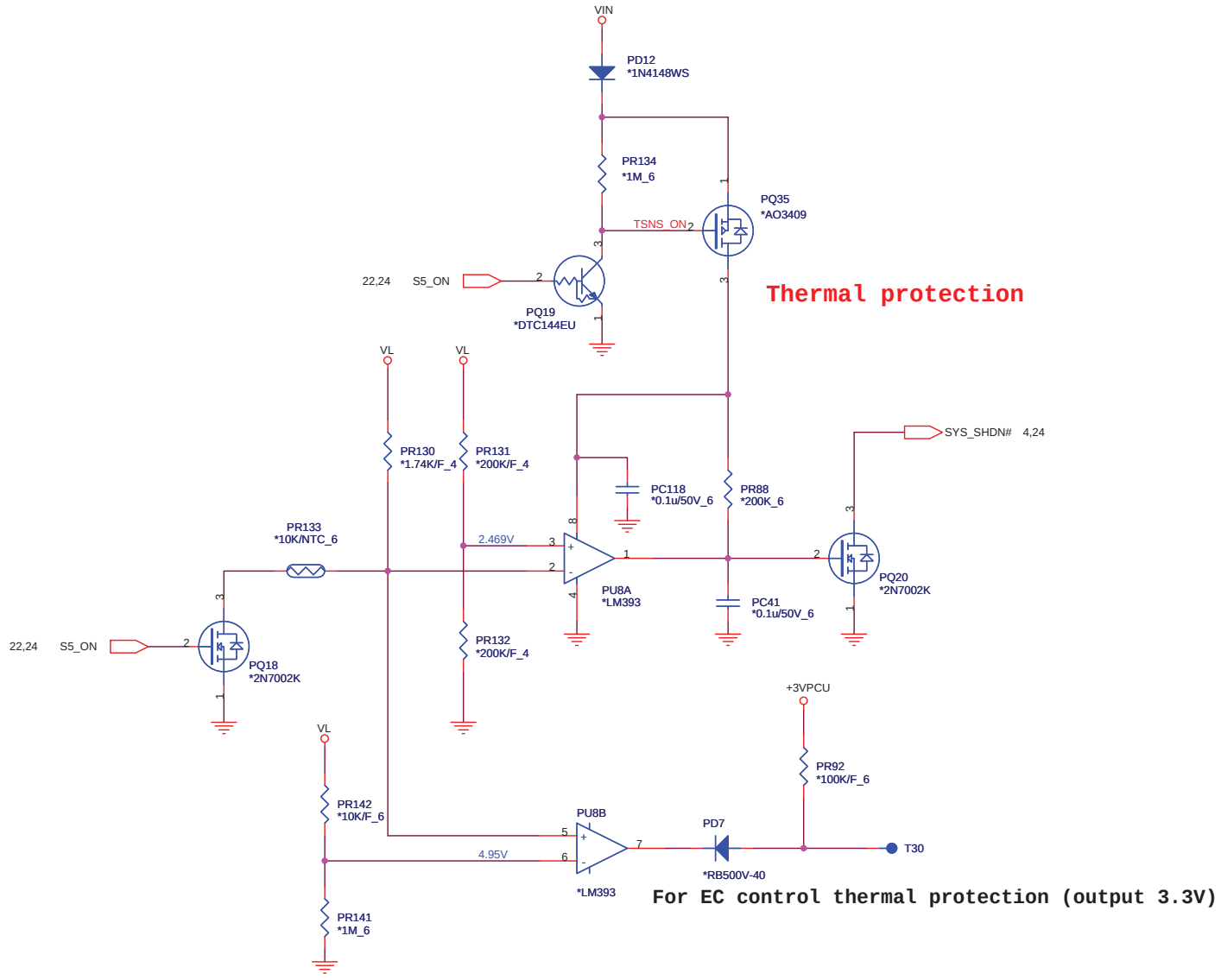

For EC control thermal protection (output 3.3V)

Quanta Computer Inc.

PROJECT : ZA5

Size	Document Number	Rev
	Thermal protect	1A

Date: Thursday, April 09, 2009 Sheet 29 of 35

http://hobi-elektronika.net

HOLES

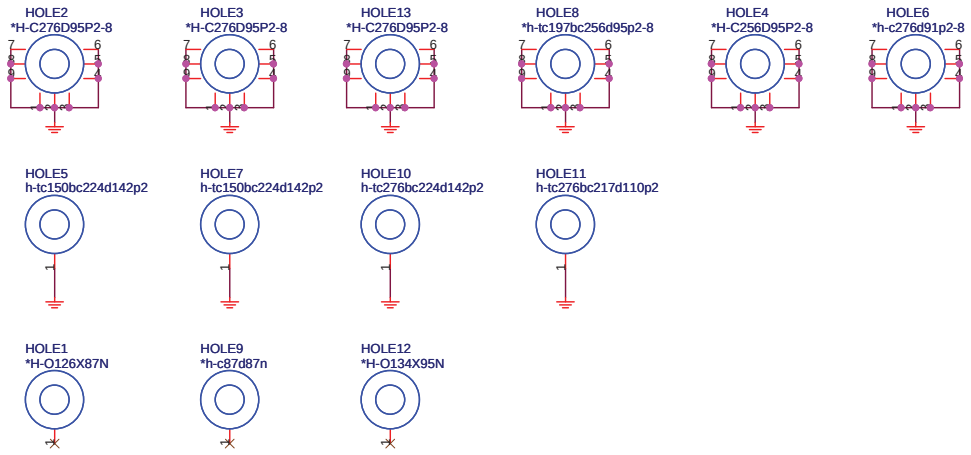

PAD

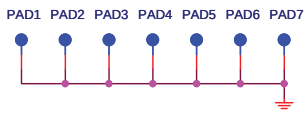

3G

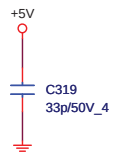

EMI

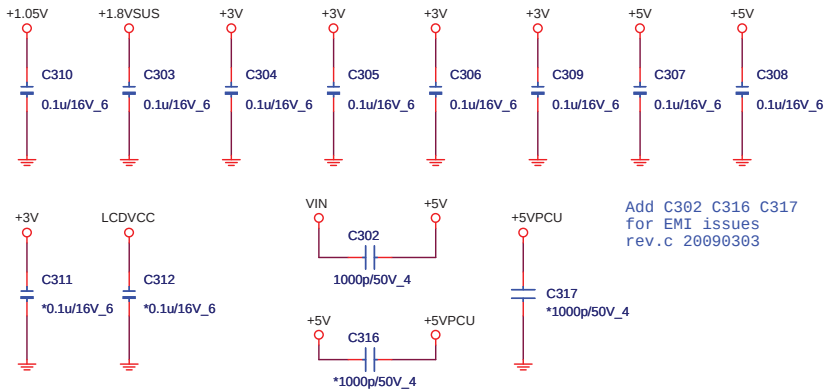

Add C303 C304 C305 C306 C307 C308 for EMI request rev.b 20090206 Add C309 C310 for EMI request rev.b 20090207

Add C302 C316 C317 for EMI issues rev.c 20090303

Quanta Computer Inc.		
PROJECT : ZA5		
Size	Document Number: HOLE	Rev 1A
Date: Thursday, April 09, 2009	Sheet 30 of 35	