http://hobi-elektronika.net

14.5 Envy (Huron River+Whistler Pro+GDDR5) BLOCK DIAGRAM

Dis.

PCB 10L STACK UP

LAYER 1 : TOP
LAYER 2 : SGND
LAYER 3 : IN1(High)
LAYER 4 : IN2(Low)
LAYER 5 : SVCC
LAYER 6 : IN3(High)
LAYER 7 : SGND
LAYER 8 : IN4(High)
LAYER 9 : SGND
LAYER 10 : BOT

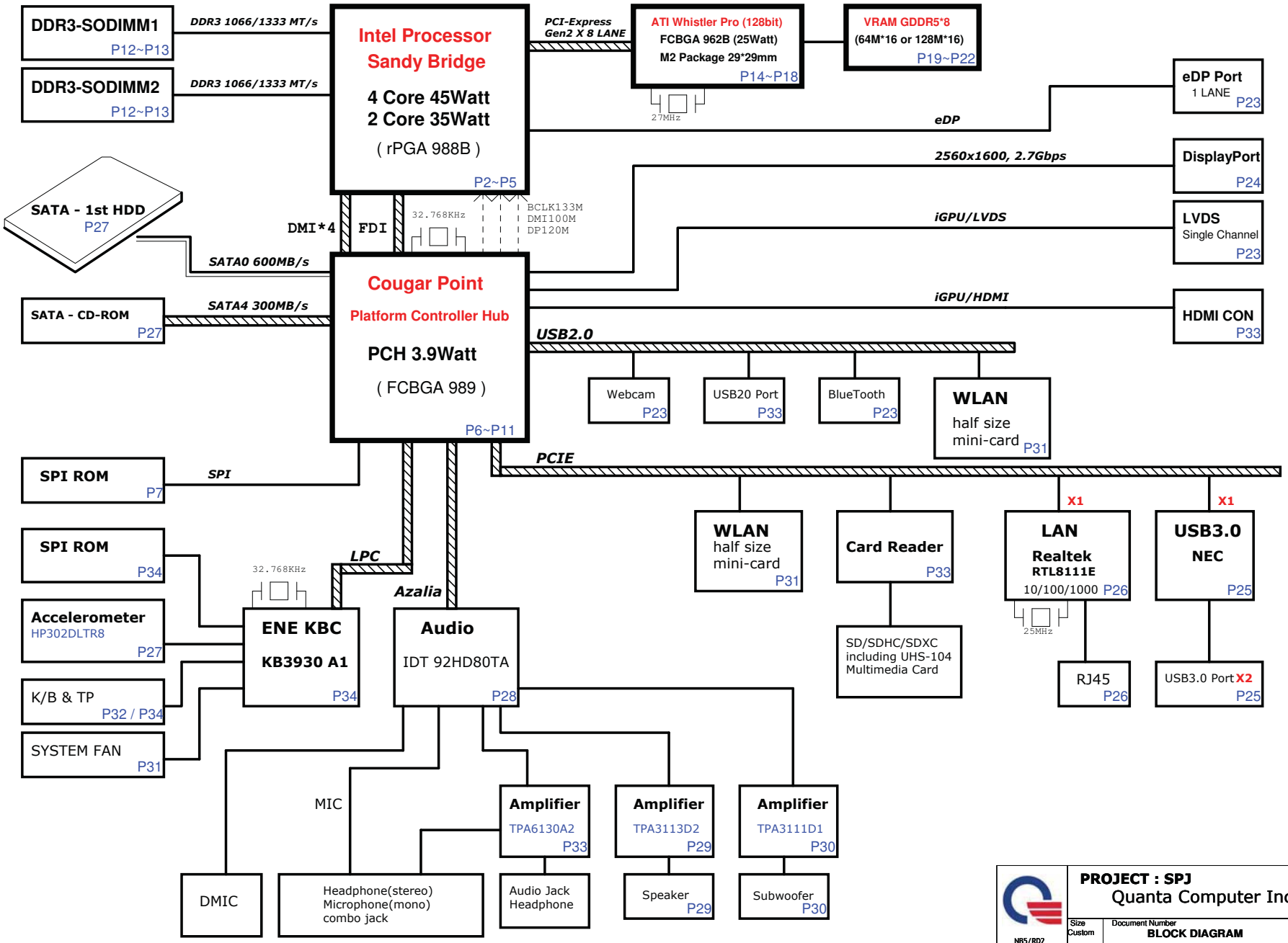

PROJECT : SPJ

Quanta Computer Inc.

Size	Document Number	Rev
Custom	BLOCK DIAGRAM	1A

Date: Thursday, October 07, 2010 | Sheet 1 of 42

NB5/RD2

http://hobi-elektronika.net

Sandy Bridge Processor (DMI,PEG,FDI) — Sandy Bridge Processor (CLK,MISC,JTAG)

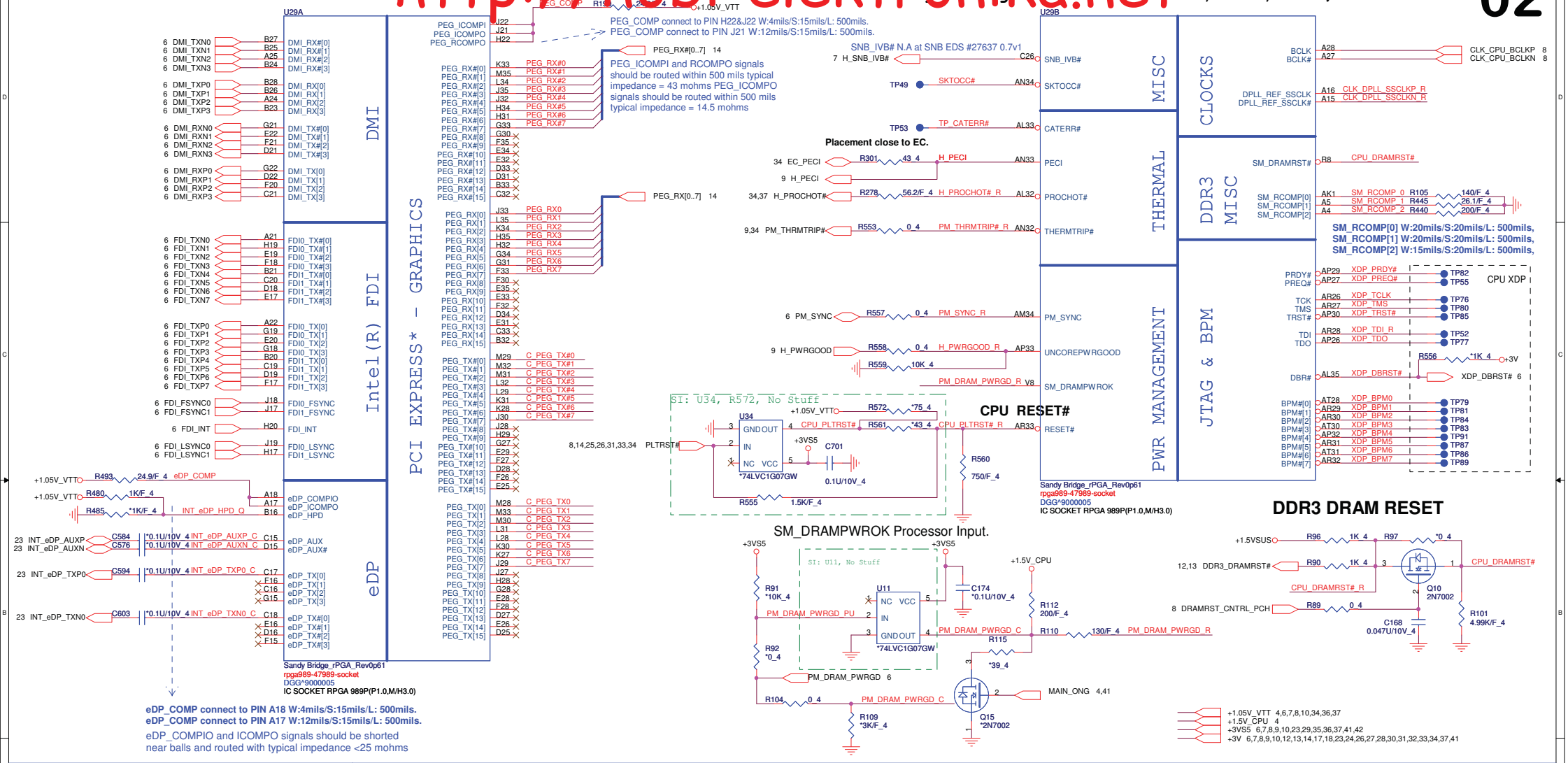

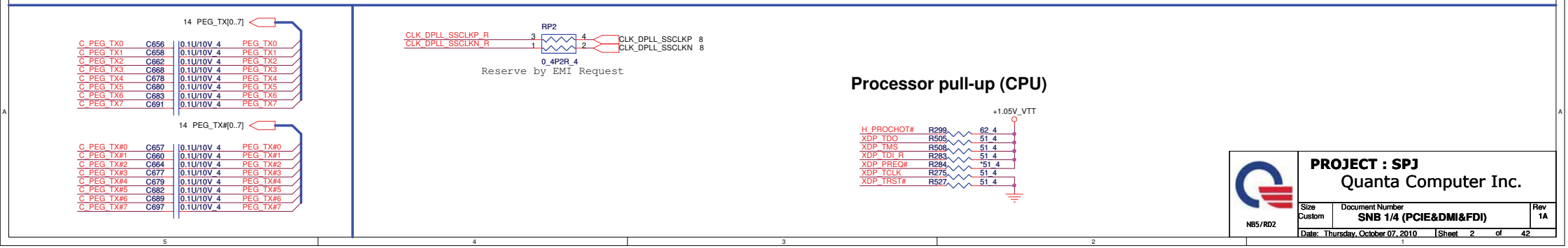

PROJECT : SPJ
Quanta Computer Inc.

Size	Document Number	Rev
Custom	SNB 1/4 (PCIE&DMI&FDI)	1A

Date: Thursday, October 07, 2010 Sheet 2 of 42

N85/RD2

http://hobi-elektronika.net

Sandy Bridge Processor (DDR3)

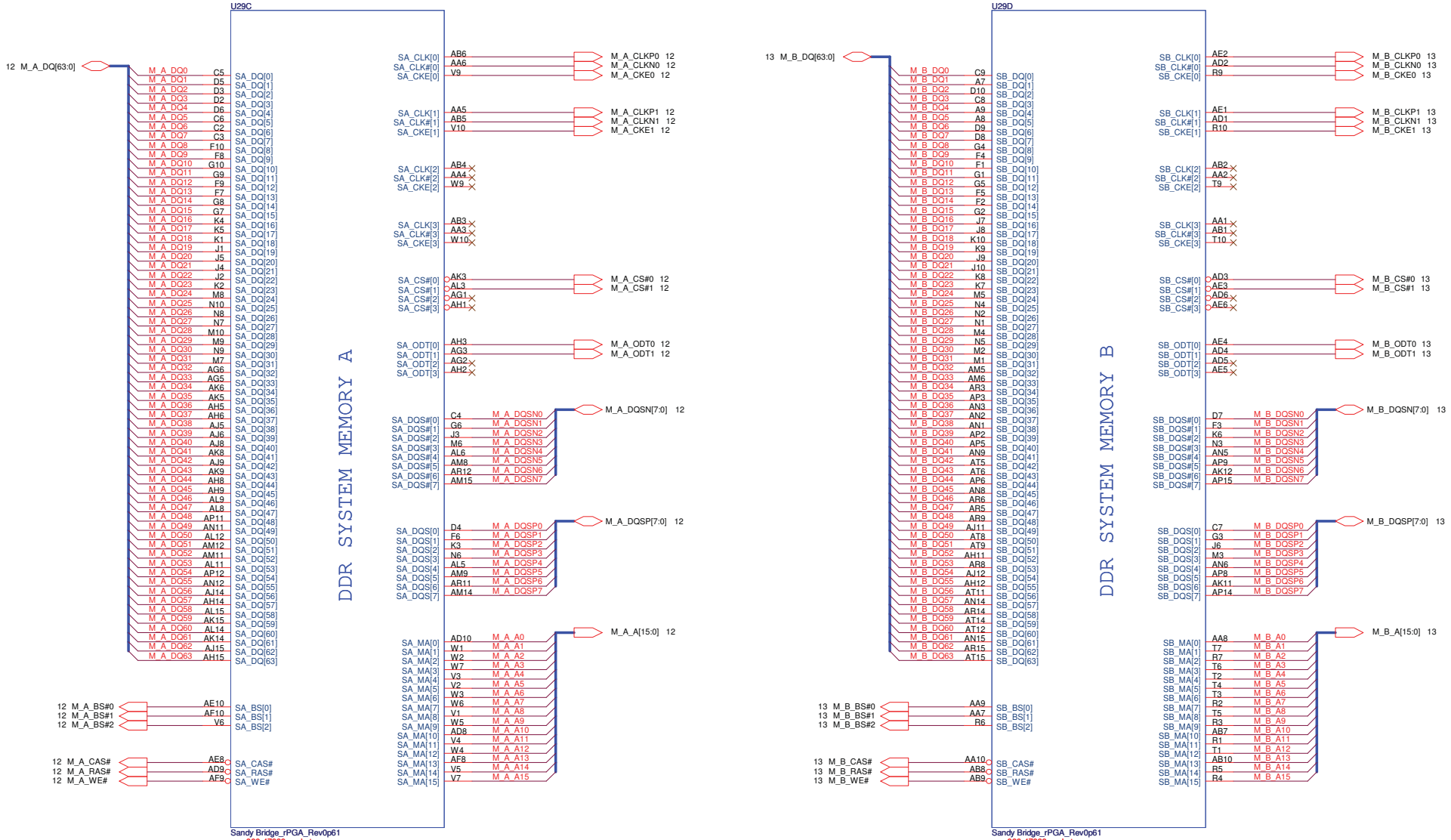

NB5/RD2

PROJECT : SPJ

Quanta Computer Inc.

Size	Document Number	Rev
Custom	SNB 2/4 (DDR3 I/F)	1A

Date: Thursday, October 07, 2010 | Sheet 3 of 42

http://hobi-elektronika.net

Sandy Bridge Processor (POWER)

Sandy Bridge Processor (GRAPHIC POWER)

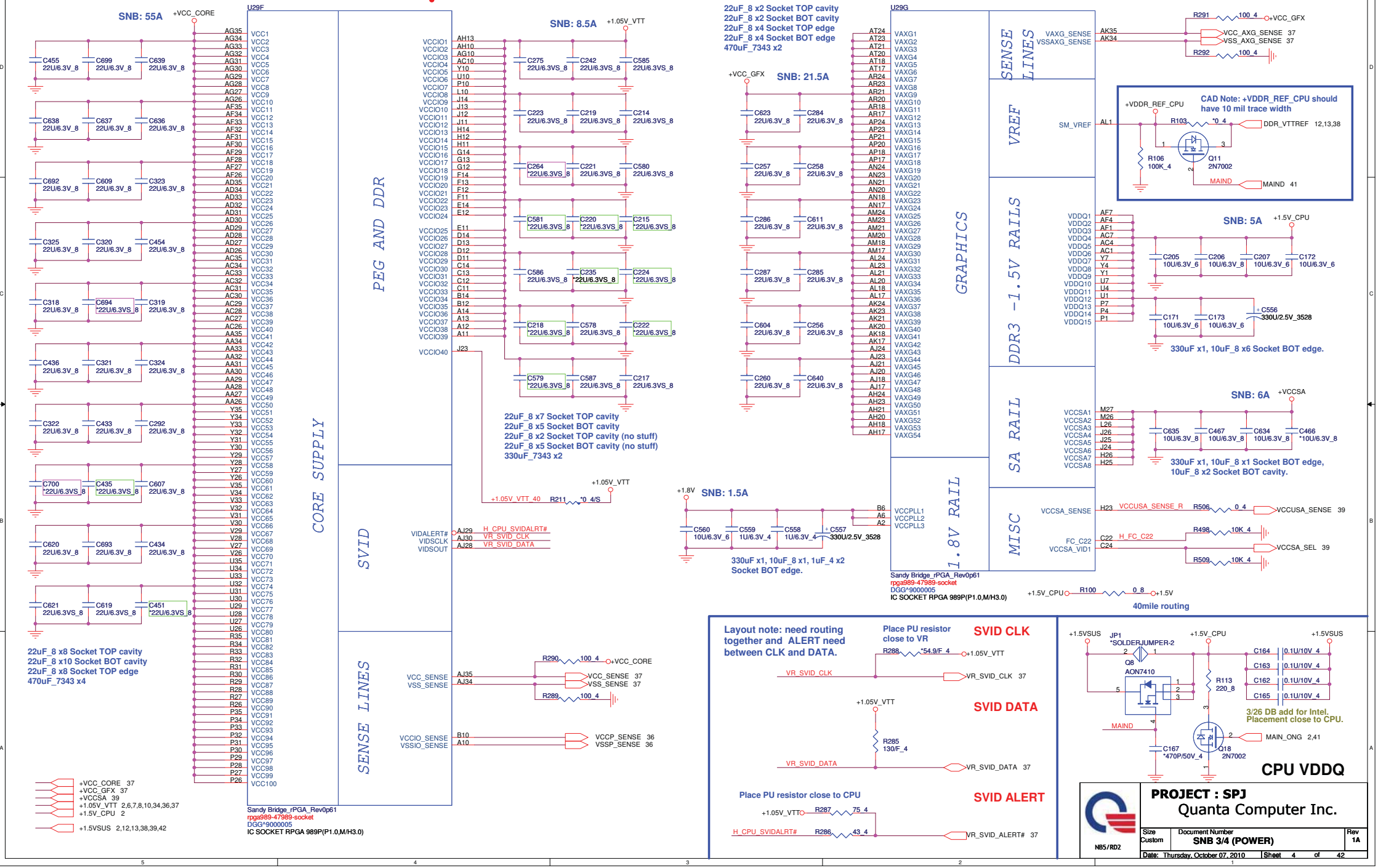

http://hobi-elektronika.net

Sandy Bridge Processor (GND)

Sandy Bridge Processor (RESERVED, CFG)

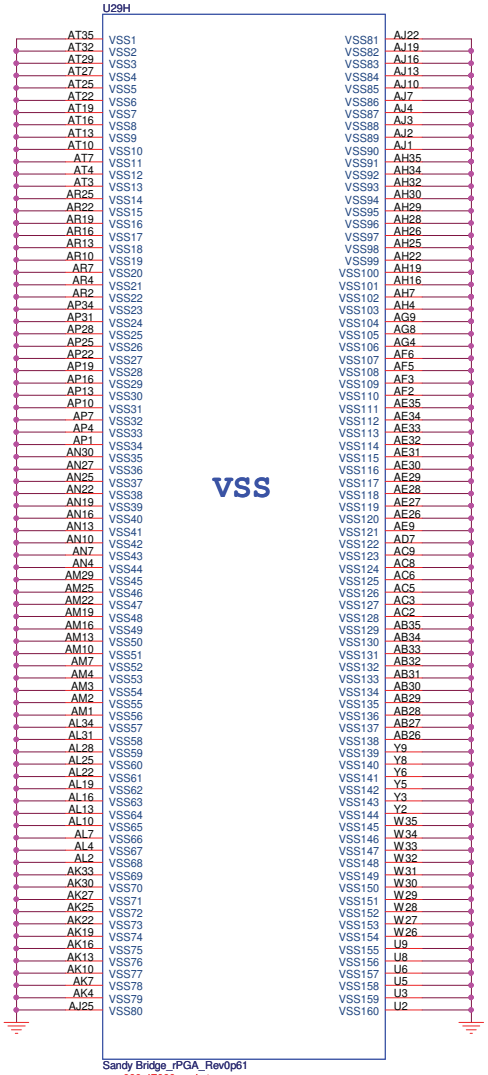

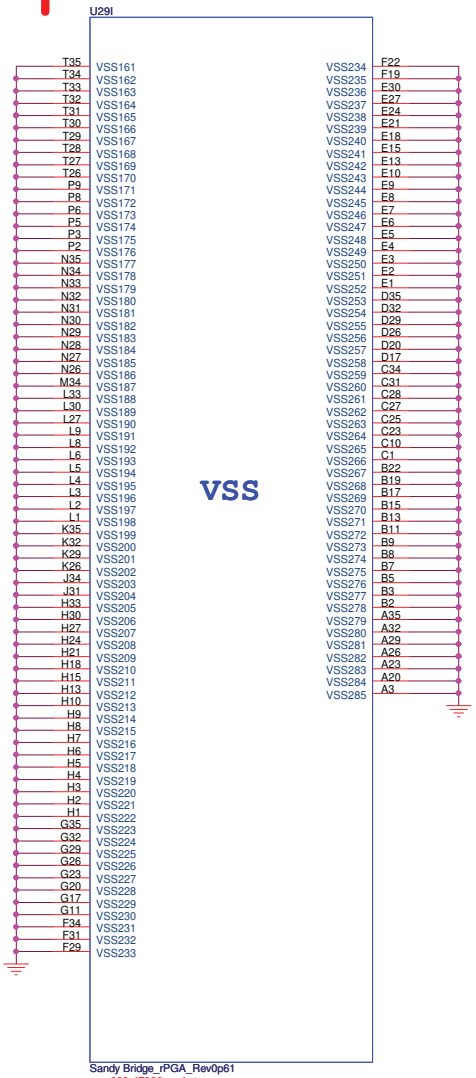

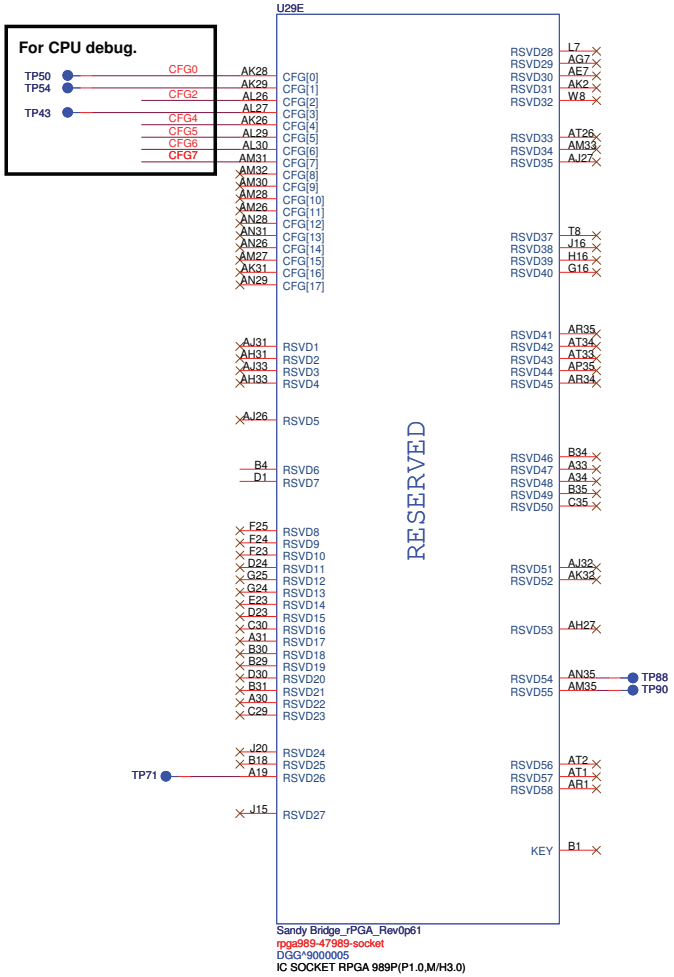

Processor Strapping

The CFG signals have a default value of '1' if not terminated on the board.

	1	0
CFG2 (PEG Static Lane Reversal)	Normal Operation	Lane Reversed
CFG4 (DP Presence Strap)	Disable; No physical DP attached to eDP	Enable; An ext DP device is connected to eDP
CFG7 (PEG Defer Training)	PEG train immediately following xxRESETB de assertion	PEG wait for BIOS training

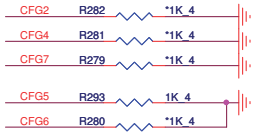

CFG[6:5] (PCIE Port Bifurcation Straps)

11: (Default) x16 - Device 1 functions 1 and 2 disabled
10: x8, x8 - Device 1 function 1 enabled ; function 2 disabled
01: Reserved - (Device 1 function 1 disabled ; function 2 enabled)
00: x8,x4,x4 - Device 1 functions 1 and 2 enabled

PROJECT : SPJ
Quanta Computer Inc.

Size	Document Number	Rev
Custom	SNB 4/4 (GND)	1A

Date: Thursday, October 07, 2010 Sheet 5 of 42

NB5/RD2

http://hobi-elektronika.net

Cougar Point (DMI,FDI,PM)

Cougar Point (LVDS,DDI)

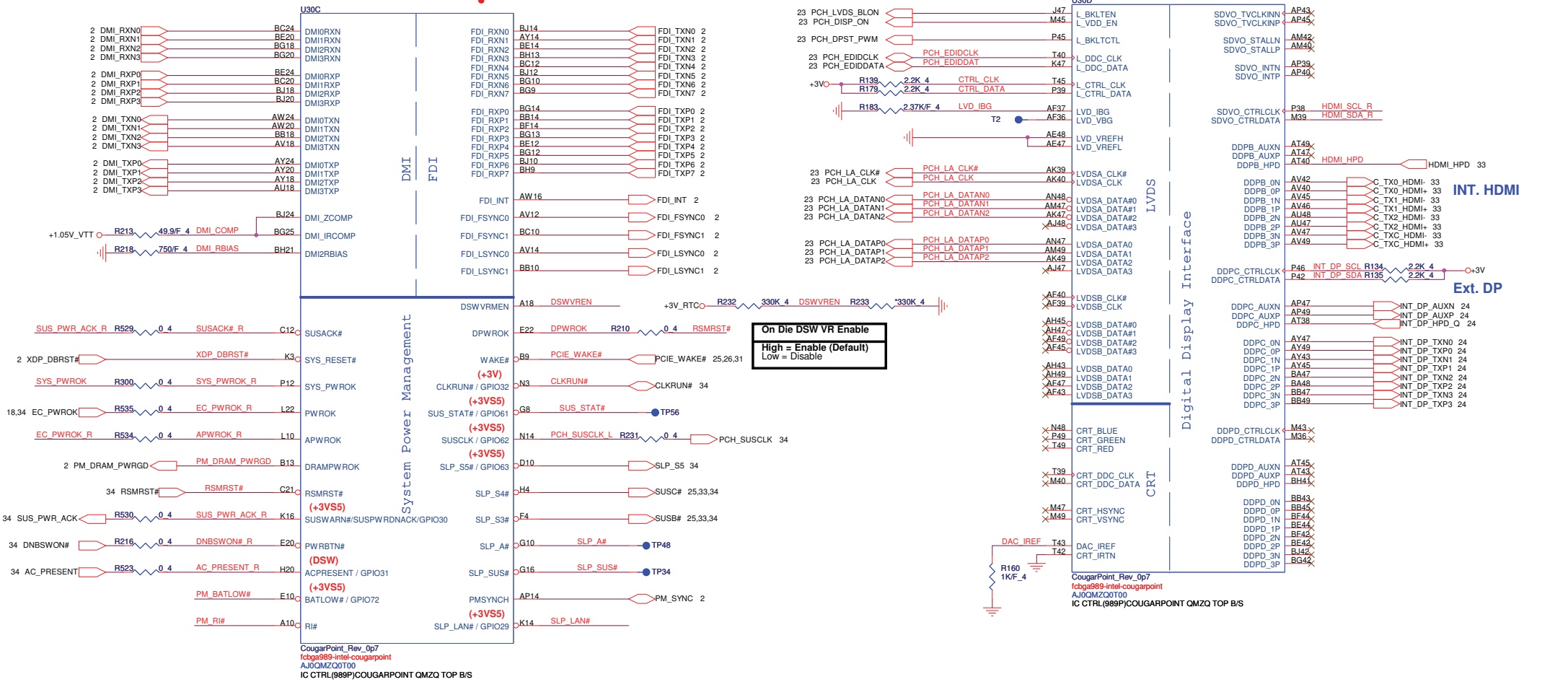

PCH Pull-high/low(CLG)

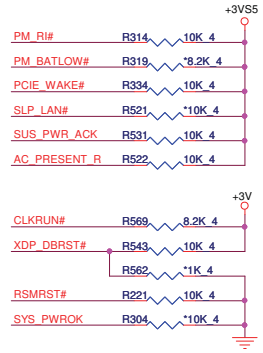

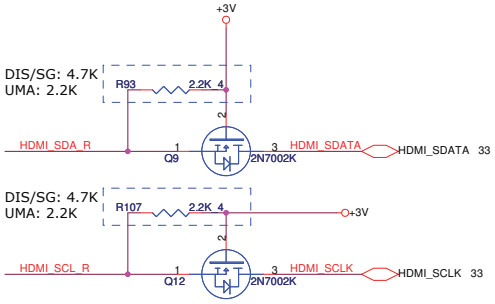

System PWR_OK(CLG)

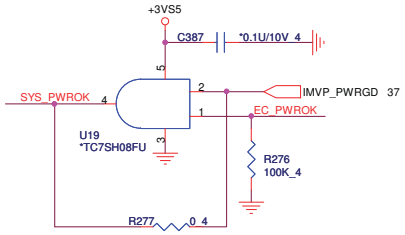

+1.05V_VTT 2,4,7,8,10,34,36,37
+3V_RTC 7,10

+3VPCU 7,23,32,33,34,35,40
+3VS5 2,7,8,9,10,23,29,35,36,37,41,42
+3V 2,7,8,9,10,12,13,14,17,18,23,24,26,27,28,30,31,32,33,34,37,41
+5V 7,10,18,23,24,27,28,31,32,33,41

NB5/RD2	PROJECT : SPJ Quanta Computer Inc.		
Size Custom	Document Number PCH 1/6 (DMI/FDI/VIDEO)		Rev 1A
Date: Thursday, October 07, 2010		Sheet 6 of 42	

http://hobi-elektronika.net

Cougar Point (HDA,JTAG,SATA)

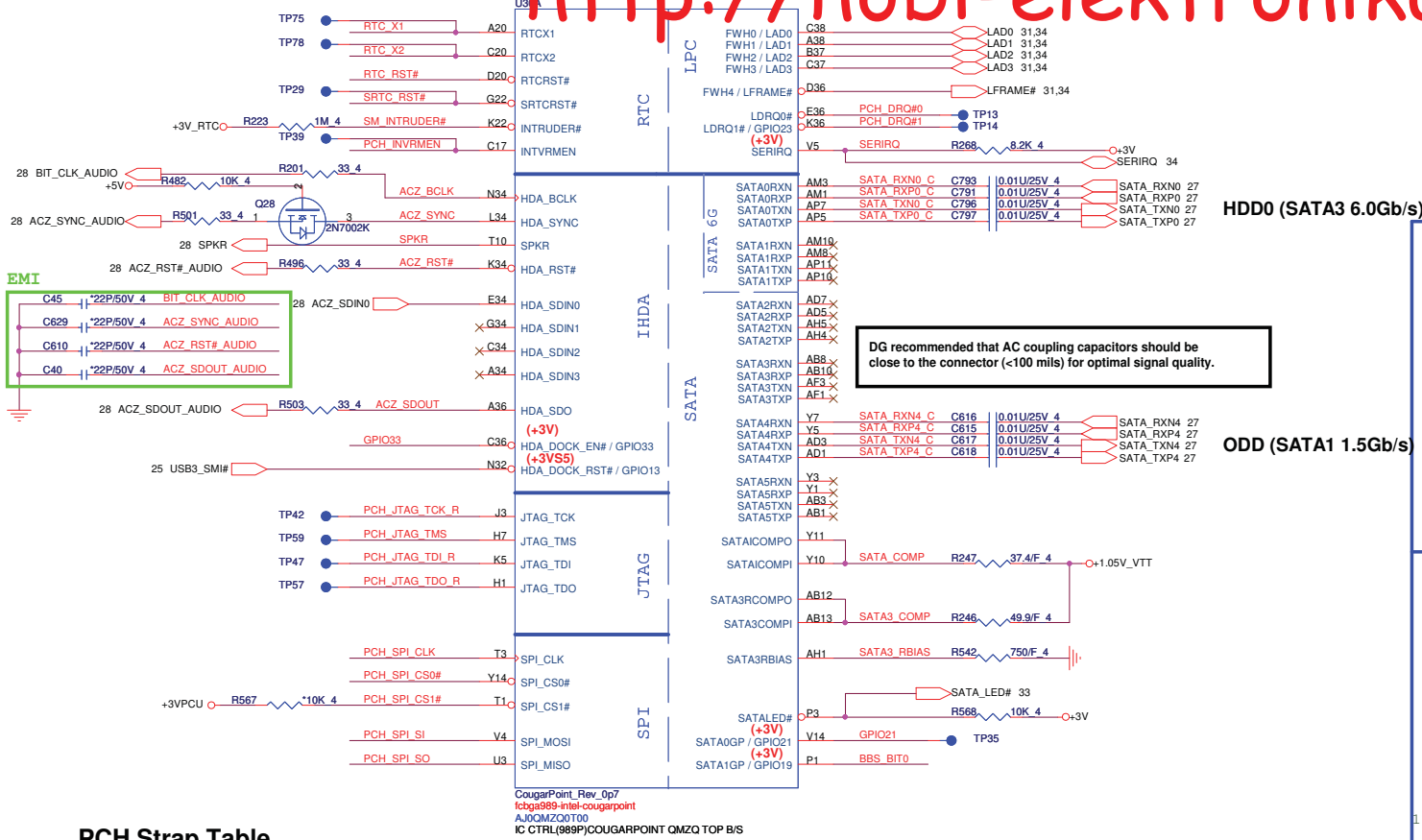

RTC Clock 32.768KHz

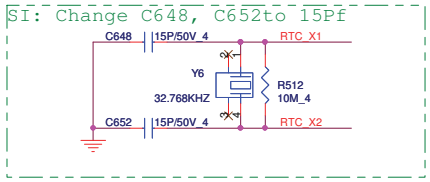

RTC Circuitry(RTC)

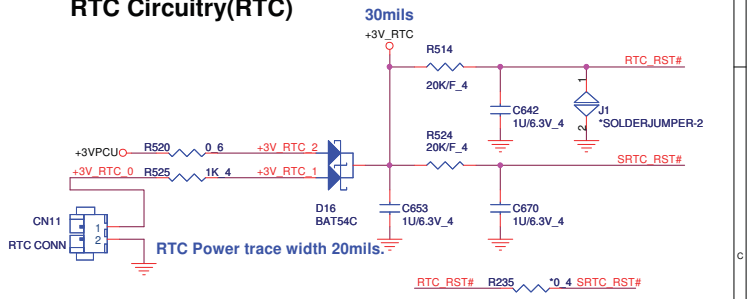

PCH JTAG Debug(CLG)

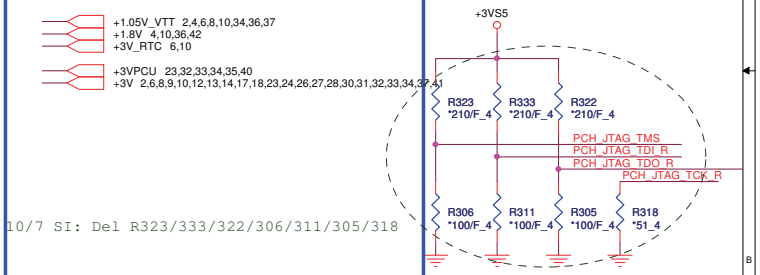

PCH SPI ROM(CLG)

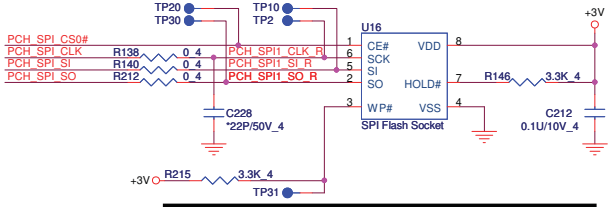

Vender	Size	P/N
EON	4MB	AKE39FN0Q00 (EN25F32-100HIP)
Winbond	4MB	AKE391P0N00 (W25Q32BVSSIG)
Socket		DG008000031

PCH Strap Table

Pin Name	Strap description	Sampled	Configuration	Circuit
SPKR (Different from Calpella)	No reboot mode setting	PWROK	0 = Default (weak pull-down 20K) 1 = Setting to No-Reboot mode	
GNT3# / GPIO55	Top-Block Swap Override	PWROK	0 = "top-block swap" mode 1 = Default (weak pull-up 20K)	R126 *1K_4, R121 10K_4, +3V, PCI_GNT3# 8
INTVRMEN	Integrated 1.05V VRM enable	ALWAYS	Should be always pull-up	PCH_INVRMEN R517 330K_4 +3V_RTC
HDA_DOCK_EN#/GPIO33	Flash Descriptor Security Only for Interposer	PWROK	0 = Override 1 = Default (weak pull-up 20K)	SI: 9/21 follow LX, Del R507 GPIO33 R507 *1K_4 GPIO33_E 34
GNT1# / GPIO51	Boot BIOS Selection 1 [bit-1]	PWROK	GNT1# 1 0; GNT0# 1 0; Boot Location SPI LPC	[Need external pull-down for LPC BIOS] Default weak pull-up on GNT0/1#
GPIO19 (Different from Calpella)	Boot BIOS Selection 0 [bit-0]	PWROK		R550 *1K_4 BBS_BIT0, R127 *1K_4 BBS_BIT1 8
GNT2# / GPIO53	ESI strap (Server only)	PWROK	Should not be pull-down (weak pull-up 20K)	USE GPIO PIN
NV_ALE	Intel Anti-Theft HDD protection Only for Interposer	PWROK	0 = Disable (Internal pull-down 20kohm)	+1.8V R541 *1K_4 NV_ALE 8
NV_CLE	DMI Termination voltage	PWROK	weak pull-down 20kohm	+1.8V R540 2.2K_4 R537 4.7K_4 NV_CLE 8 H_SNB_IVB# 2 N.A at CPT EDS 0.7
HDA_SYNC	On-Die PLL VR Voltage Select	RSMRST	0 = Support by 1.8V (weak pull-down) 1 = Support by 1.5V	+3VS5 R504 1K_4 ACZ_SYNC
HDA_SDO	Flash Descriptor Security	PWROK	0 = Override 1 = Default (weak pull-up 20K)	SI : 9/21 follow LX 34 GPIO33_E ACZ_SDOUT R499 *1K_4 +3VS5
GPIO8	Integrated Clock Chip Enable	RSMRST#	Should be pull-down (weak pull-up 20K)	R262 *1K_4 ICC_EN# 9
GPIO28 (Different from Calpella)	On-die PLL Voltage Regulator	RSMRST#	0 = Disable 1 = Enable (Default)	R532 *1K_4 PLL_ODVR_EN 9
SPI_MOSI	iTPM function Disable	APWROK	0 = Default (weak pull-down 20K) 1 = Enable	PCH_SPI_SI R158 1K_4 +3V

PROJECT : SPJ
Quanta Computer Inc.

Size	Document Number	Rev
Custom	PCH 2/6 (SATA/HDA/SPI)	1A

Date: Friday, October 08, 2010 | Sheet 7 of 42

NB5/RD2

http://hobi-elektronika.net

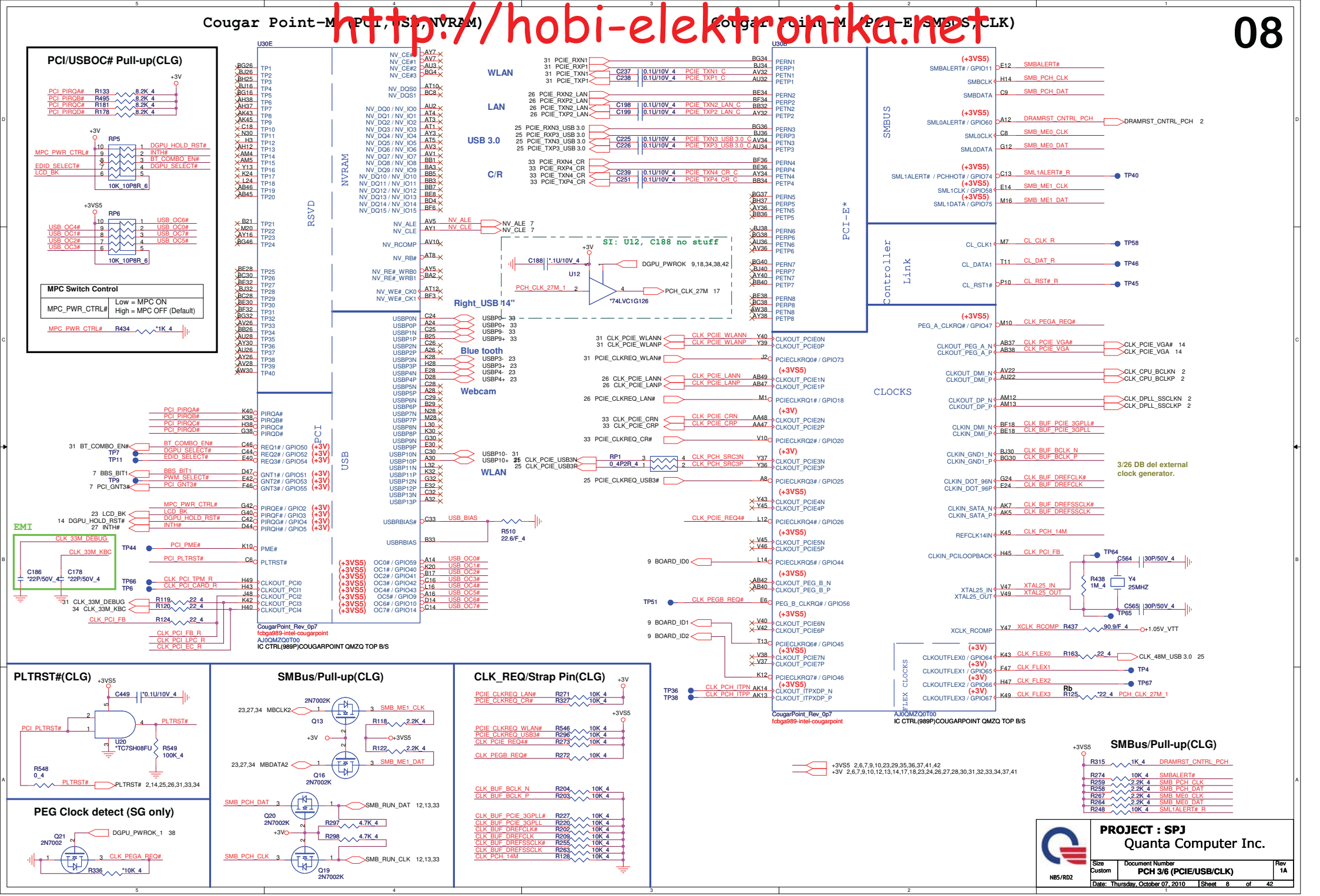

http://hobi-elektronika.net

Cougar Point (GPIO,VSS_NCTF,RSVD)

MFG-TEST

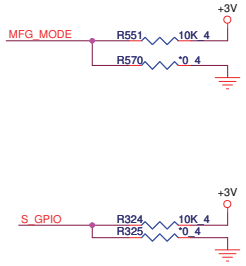

GPIO Pull-up/Pull-down(CLG)

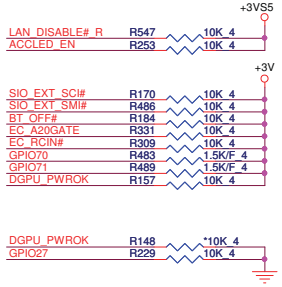

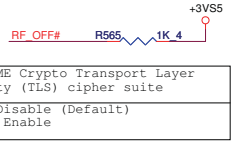

Intel ME Crypto Transport Layer Security (TLS) cipher suite
Low = Disable (Default) High = Enable

BIOS RECOVERY	High = Disable (Default) Low = Enable

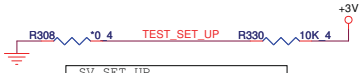

SV_SET_UP
High = Strong (Default)

TEST DETECT
Low = Default

DMI TERMINATION VOLTAGE OVERRIDE	Low = Tx, Rx terminated to same voltage (DC Coupling Mode) (DEFAULT)

FDI TERMINATION VOLTAGE OVERRIDE	LOW - Tx, Rx terminated to same voltage

BOARD ID SETTING

BOARD ID SETTING	0	1
BOARD_ID0 GPIO 44	14"	15"
BOARD_ID1 GPIO 45	CPU 35W	CPU 45W
BOARD_ID2 GPIO 46	LVDS	eDP
BOARD_ID3 GPIO 34	RESERVE	RESERVE
BOARD_ID4 GPIO 35	RESERVE	RESERVE
BOARD_ID5 GPIO 24	RESERVE	RESERVE

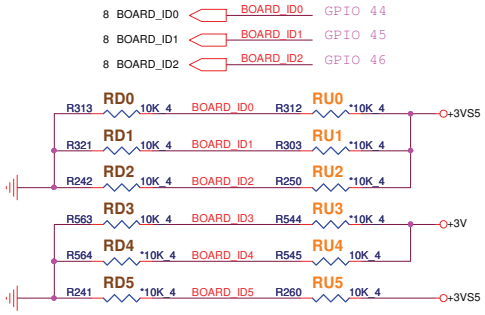

GFX Present

	SG	UMA
Stuff	Ra	Rb
NC	Rb	Ra

NB5/RD2

PROJECT : SPJ

Quanta Computer Inc.

Size	Document Number	Rev
Custom	PCH 4/6 (GPIO/MISC)	1A

Date: Thursday, October 07, 2010 Sheet 9 of 42

http://hobi-elektronika.net

Cougar Point-M (POWER)

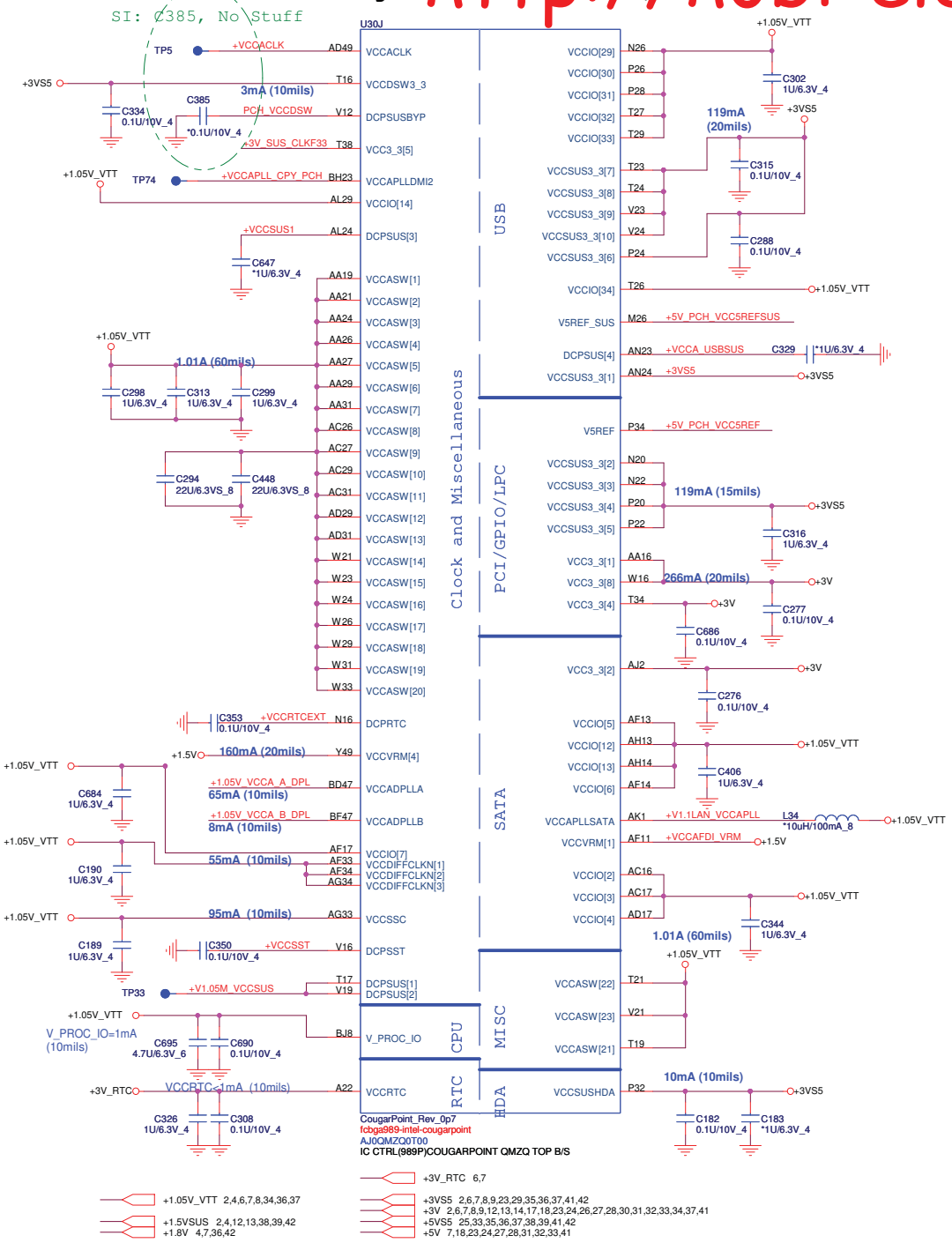

COUGAR POINT (POWER)

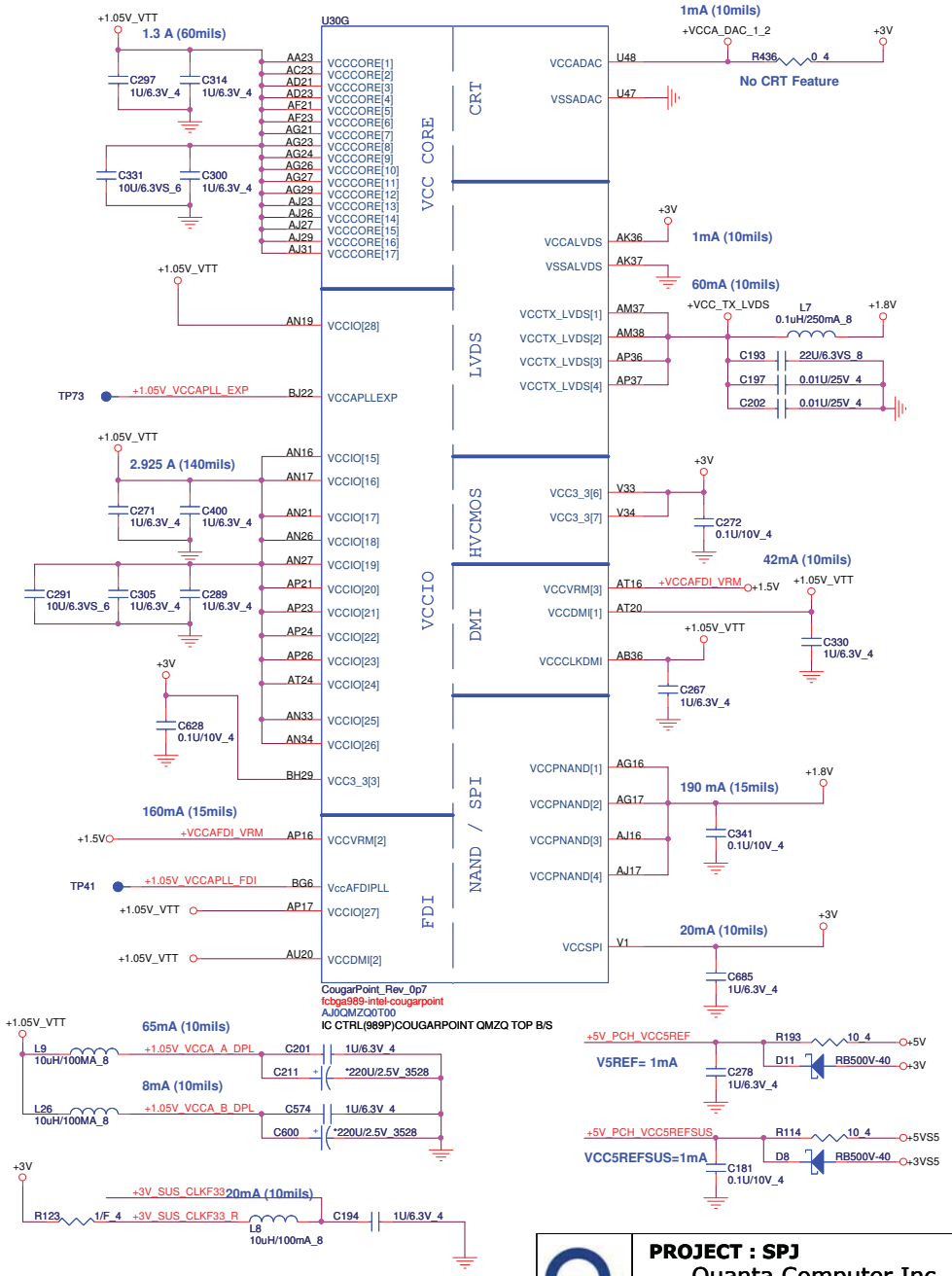

+3V_RTC 6,7

+1.05V_VTT 2,4,6,7,8,34,36,37

+1.5VSUS 2,4,12,13,38,39,42

+1.8V 4,7,36,42

+3VS5 2,6,7,8,9,23,29,35,36,37,41,42

+3V 2,6,7,8,9,12,13,14,17,18,23,24,26,27,28,30,31,32,33,34,37,41

+5VS5 25,33,35,36,37,38,39,41,42

+5V 7,18,23,24,27,28,31,32,33,41

NB5/RD2

PROJECT : SPJ

Quanta Computer Inc.

Size	Document Number	Rev
Custom	PCH 5/6 (POWER)	1A

Date: Thursday, October 07, 2010 | Sheet 10 of 42

http://hobi-elektronika.net

IBEX PEAK-M (GND)

U30I

AY4	VSS[159]	VSS[259]	H46
AY42	VSS[160]	VSS[260]	K18
AY46	VSS[161]	VSS[261]	K26
AY8	VSS[162]	VSS[262]	K39
B11	VSS[163]	VSS[263]	K46
B15	VSS[164]	VSS[264]	K7
B19	VSS[165]	VSS[265]	L18
B23	VSS[166]	VSS[266]	L2
B27	VSS[167]	VSS[267]	L20
B31	VSS[168]	VSS[268]	L26
B35	VSS[169]	VSS[269]	L28
B39	VSS[170]	VSS[270]	L36
B7	VSS[171]	VSS[271]	L48
F45	VSS[172]	VSS[272]	M12
BB12	VSS[173]	VSS[273]	P16
BB16	VSS[174]	VSS[274]	M18
BB20	VSS[175]	VSS[275]	M22
BB22	VSS[176]	VSS[276]	M24
BB24	VSS[177]	VSS[277]	M30
BB28	VSS[178]	VSS[278]	M32
BB30	VSS[179]	VSS[279]	M34
BB38	VSS[180]	VSS[280]	M38
BB4	VSS[181]	VSS[281]	M4
BB46	VSS[182]	VSS[282]	M42
BC14	VSS[183]	VSS[283]	M46
BC18	VSS[184]	VSS[284]	M8
BC2	VSS[185]	VSS[285]	N18
BC22	VSS[186]	VSS[286]	P30
BC26	VSS[187]	VSS[287]	N47
BC32	VSS[188]	VSS[288]	P11
BC34	VSS[189]	VSS[289]	P18
BC36	VSS[190]	VSS[290]	T33
BC40	VSS[191]	VSS[291]	P40
BC42	VSS[192]	VSS[292]	P43
BC48	VSS[193]	VSS[293]	P47
BD46	VSS[194]	VSS[294]	P7
BD5	VSS[195]	VSS[295]	R2
BF22	VSS[196]	VSS[296]	R48
BF26	VSS[197]	VSS[297]	T12
BF40	VSS[198]	VSS[298]	T31
BF10	VSS[199]	VSS[299]	T37
BF12	VSS[200]	VSS[300]	T4
BF16	VSS[201]	VSS[301]	W34
BF20	VSS[202]	VSS[302]	T46
BF22	VSS[203]	VSS[303]	T47
BF24	VSS[204]	VSS[304]	T8
BF26	VSS[205]	VSS[305]	V11
BF28	VSS[206]	VSS[306]	V17
BD3	VSS[207]	VSS[307]	V26
BF30	VSS[208]	VSS[308]	V27
BF38	VSS[209]	VSS[309]	V29
BF40	VSS[210]	VSS[310]	V31
BF8	VSS[211]	VSS[311]	V36
BG17	VSS[212]	VSS[312]	V39
BG21	VSS[213]	VSS[313]	V43
BG33	VSS[214]	VSS[314]	V7
BG44	VSS[215]	VSS[315]	W17
BG8	VSS[216]	VSS[316]	W19
BH11	VSS[217]	VSS[317]	W2
BH15	VSS[218]	VSS[318]	W27
BH17	VSS[219]	VSS[319]	W48
BH19	VSS[220]	VSS[320]	Y12
H10	VSS[221]	VSS[321]	Y38
BH27	VSS[222]	VSS[322]	Y4
BH31	VSS[223]	VSS[323]	Y42
BH33	VSS[224]	VSS[324]	Y46
BH35	VSS[225]	VSS[325]	Y8
BH39	VSS[226]	VSS[328]	BG29
BH43	VSS[227]	VSS[329]	N24
BH7	VSS[228]	VSS[330]	AJ3
D3	VSS[229]	VSS[331]	AD47
D12	VSS[230]	VSS[333]	B43
D16	VSS[231]	VSS[334]	BE10
D18	VSS[232]	VSS[335]	BG41
D22	VSS[233]	VSS[337]	G14
D24	VSS[234]	VSS[338]	H16
D26	VSS[235]	VSS[340]	T36
D30	VSS[236]	VSS[342]	BG22
D32	VSS[237]	VSS[343]	BG24
D34	VSS[238]	VSS[344]	C22
D38	VSS[239]	VSS[345]	AP13
D42	VSS[240]	VSS[346]	M14
D8	VSS[241]	VSS[347]	AP3
E18	VSS[242]	VSS[348]	AP1
E26	VSS[243]	VSS[349]	BE16
G18	VSS[244]	VSS[350]	BC16
G20	VSS[245]	VSS[351]	BG28
G26	VSS[246]	VSS[352]	BJ28
G28	VSS[247]		
G36	VSS[248]		
G48	VSS[249]		
H12	VSS[250]		
H18	VSS[251]		
H22	VSS[252]		
H24	VSS[253]		
H26	VSS[254]		
H30	VSS[255]		
H32	VSS[256]		
H34	VSS[257]		
F3	VSS[258]		

CougarPoint_Rev_0p7

IBEX PEAK-M (GND)

U30H

H5	VSS[0]		
AA17	VSS[1]	VSS[80]	AK38
AA2	VSS[2]	VSS[81]	AK4
AA3	VSS[3]	VSS[82]	AK42
AA33	VSS[4]	VSS[83]	AK46
AA34	VSS[5]	VSS[84]	AK8
AB11	VSS[6]	VSS[85]	AL16
AB14	VSS[7]	VSS[86]	AL17
AB39	VSS[8]	VSS[87]	AL19
AB4	VSS[9]	VSS[88]	AL2
AB43	VSS[10]	VSS[89]	AL21
AB5	VSS[11]	VSS[90]	AL23
AB7	VSS[12]	VSS[91]	AL26
AC19	VSS[13]	VSS[92]	AL27
AC2	VSS[14]	VSS[93]	AL31
AC21	VSS[15]	VSS[94]	AL33
AC24	VSS[16]	VSS[95]	AL34
AC33	VSS[17]	VSS[96]	AL48
AC34	VSS[18]	VSS[97]	AM11
AC48	VSS[19]	VSS[98]	AM14
AD10	VSS[20]	VSS[99]	AM36
AD11	VSS[21]	VSS[100]	AM39
AD12	VSS[22]	VSS[101]	AM43
AD13	VSS[23]	VSS[102]	AM45
AD19	VSS[24]	VSS[103]	AM46
AD24	VSS[25]	VSS[104]	AM7
AD26	VSS[26]	VSS[105]	AN2
AD27	VSS[27]	VSS[106]	AN29
AD33	VSS[28]	VSS[107]	AN3
AD34	VSS[29]	VSS[108]	AN31
AD36	VSS[30]	VSS[109]	AP12
AD37	VSS[31]	VSS[110]	AP19
AD38	VSS[32]	VSS[111]	AP28
AD39	VSS[33]	VSS[112]	AP30
AD4	VSS[34]	VSS[113]	AP32
AD40	VSS[35]	VSS[114]	AP38
AD42	VSS[36]	VSS[115]	AP4
AD43	VSS[37]	VSS[116]	AP42
AD45	VSS[38]	VSS[117]	AP46
AD46	VSS[39]	VSS[118]	AP8
AD8	VSS[40]	VSS[119]	AR2
AE2	VSS[41]	VSS[120]	AR48
AE3	VSS[42]	VSS[121]	AT11
AF10	VSS[43]	VSS[122]	AT13
AF12	VSS[44]	VSS[123]	AT18
AD14	VSS[45]	VSS[124]	AT22
AD16	VSS[46]	VSS[125]	AT26
AF16	VSS[47]	VSS[126]	AT28
AF19	VSS[48]	VSS[127]	AT30
AF24	VSS[49]	VSS[128]	AT32
AF26	VSS[50]	VSS[129]	AT34
AF27	VSS[51]	VSS[130]	AT39
AF29	VSS[52]	VSS[131]	AT42
AF31	VSS[53]	VSS[132]	AT46
AF38	VSS[54]	VSS[133]	AT7
AF4	VSS[55]	VSS[134]	AU24
AF42	VSS[56]	VSS[135]	AU30
AF46	VSS[57]	VSS[136]	AV16
AF5	VSS[58]	VSS[137]	AV20
AF7	VSS[59]	VSS[138]	AV24
AF8	VSS[60]	VSS[139]	AV30
AG19	VSS[61]	VSS[140]	AV38
AG2	VSS[62]	VSS[141]	AV4
AG31	VSS[63]	VSS[142]	AV43
AG48	VSS[64]	VSS[143]	AV8
AH11	VSS[65]	VSS[144]	AW14
AH3	VSS[66]	VSS[145]	AW18
AH36	VSS[67]	VSS[146]	AW2
AH39	VSS[68]	VSS[147]	AW22
AH40	VSS[69]	VSS[148]	AW26
AH42	VSS[70]	VSS[149]	AW28
AH46	VSS[71]	VSS[150]	AW32
AH7	VSS[72]	VSS[151]	AW34
AJ19	VSS[73]	VSS[152]	AW36
AJ21	VSS[74]	VSS[153]	AW40
AJ24	VSS[75]	VSS[154]	AW48
AJ33	VSS[76]	VSS[155]	AV11
AJ34	VSS[77]	VSS[156]	AY12
AK12	VSS[78]	VSS[157]	AY22
AK3	VSS[79]	VSS[158]	AY28

CougarPoint_Rev_0p7

NB5/RD2

PROJECT : SPJ

Quanta Computer Inc.

Size	Document Number	Rev
Custom	PCH 6/6 (GND)	1A

Date: Thursday, October 07, 2010 | Sheet 11 of 42

http://hobi-elektronika.net

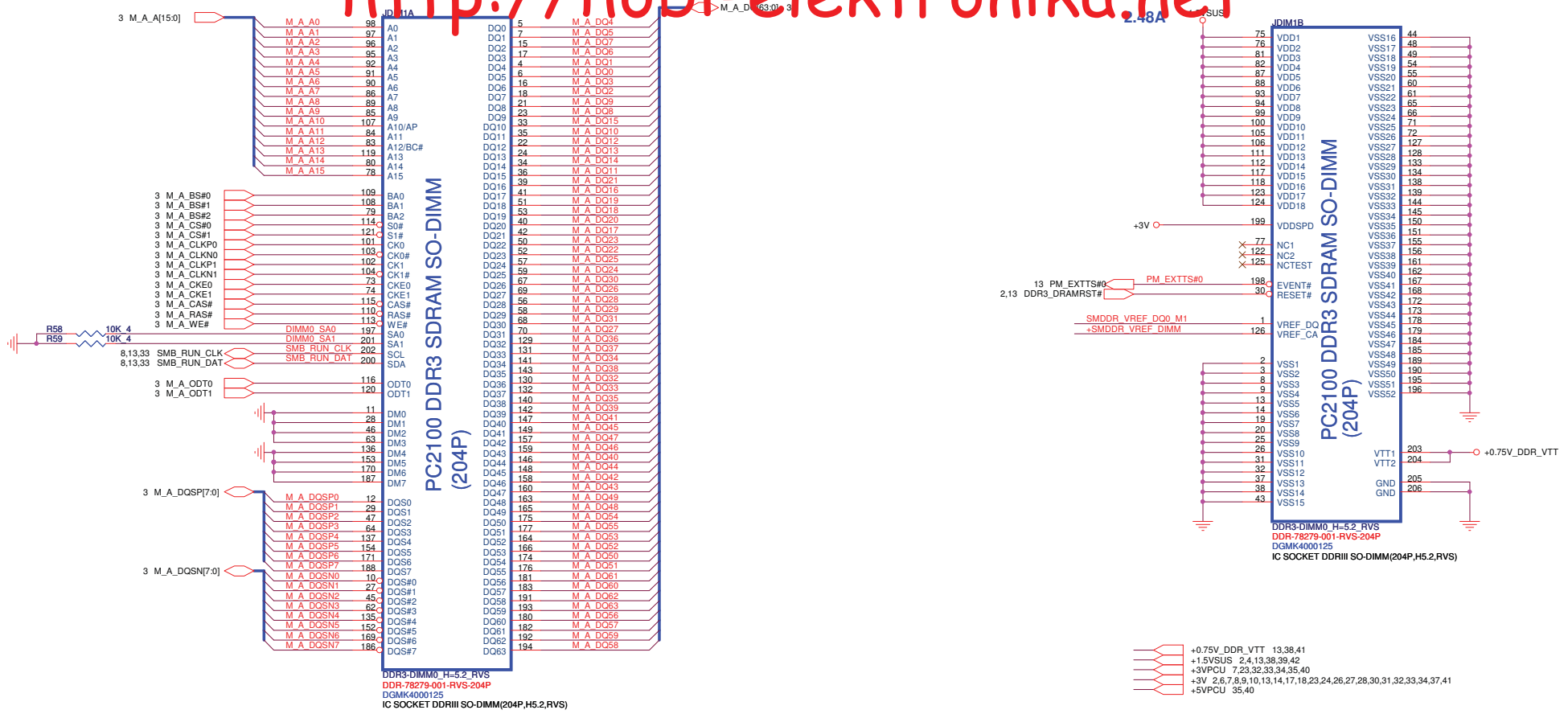

Place these Caps near So-Dimm0.

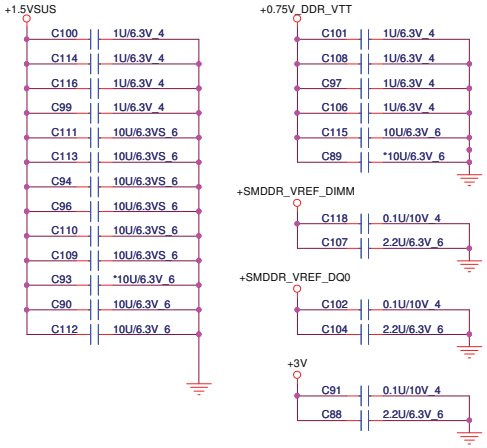

VREF DQ0 M1 Solution

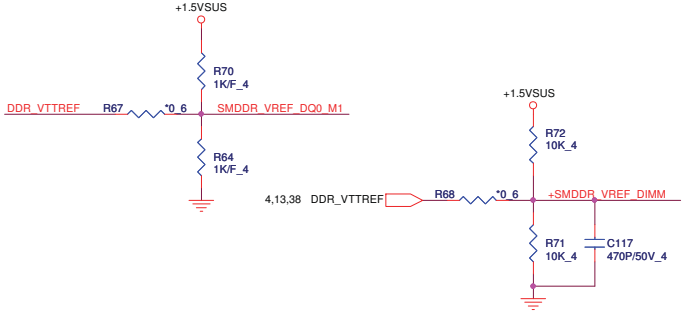

PROJECT : SPJ

Quanta Computer Inc.

Size	Document Number	Rev
Custom	DDR3 DIMM0-RVS (5.2H)	1A

NB5/RD2

Date: Thursday, October 07, 2010 Sheet 12 of 42

http://hobi-elektronika.net

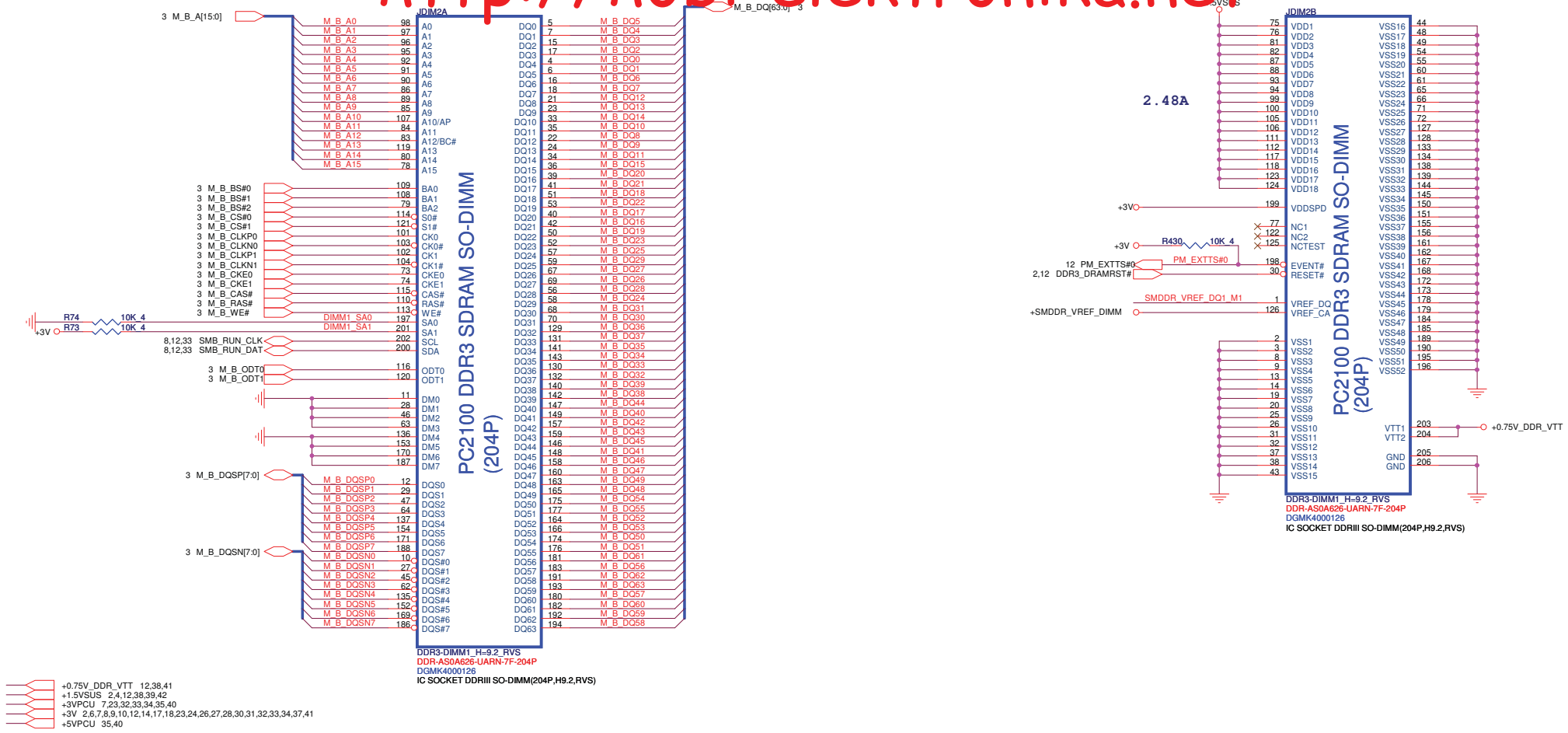

Place these Caps near So-Dimm1.

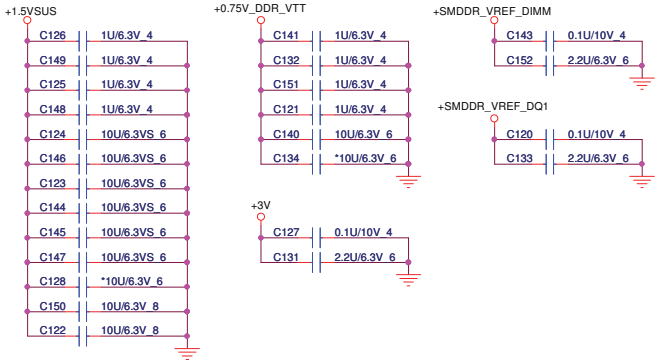

VREF DQ1 M1 Solution

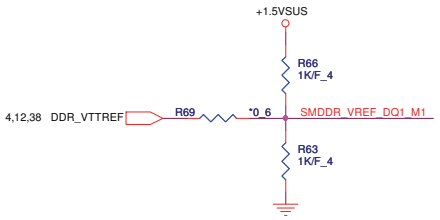

NB5/RD2	**PROJECT : SPJ** Quanta Computer Inc.	
Size Custom	Document Number **DDR3 DIMM1-RVS (9.2H)**	Rev 1A
Date: Thursday, October 07, 2010	Sheet 13 of 42	

http://hobi-elektronika.net

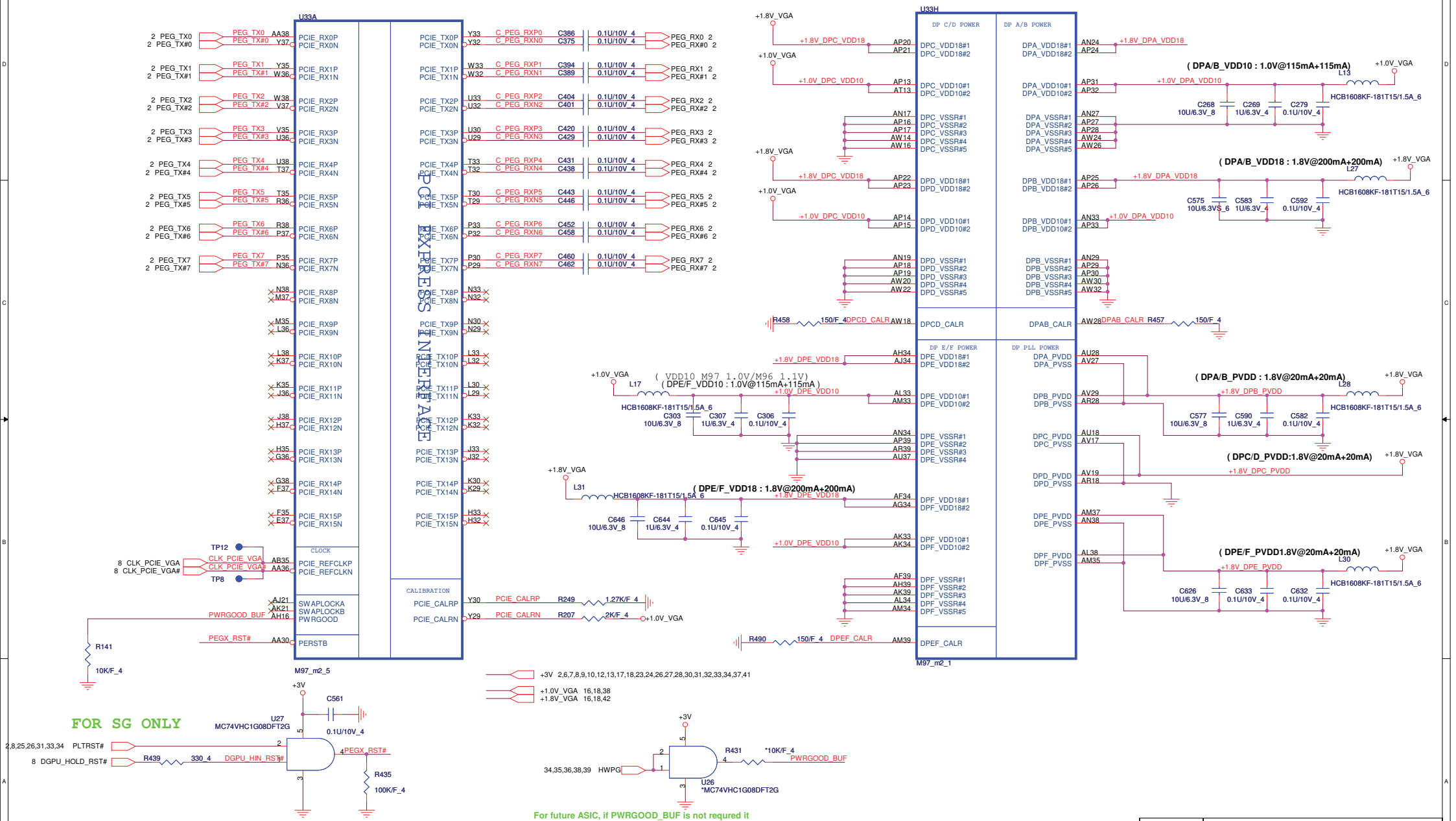

PROJECT : SPJ
Quanta Computer Inc.

Size	Document Number	Rev
Custom	Wishtler PRO (PCIE) 1/5	1A

NB5/RD2

Date: Thursday, October 07, 2010 Sheet 14 of 42

http://hobi-elektronika.net

Park, M92M Use Channel B Memory Interface Only

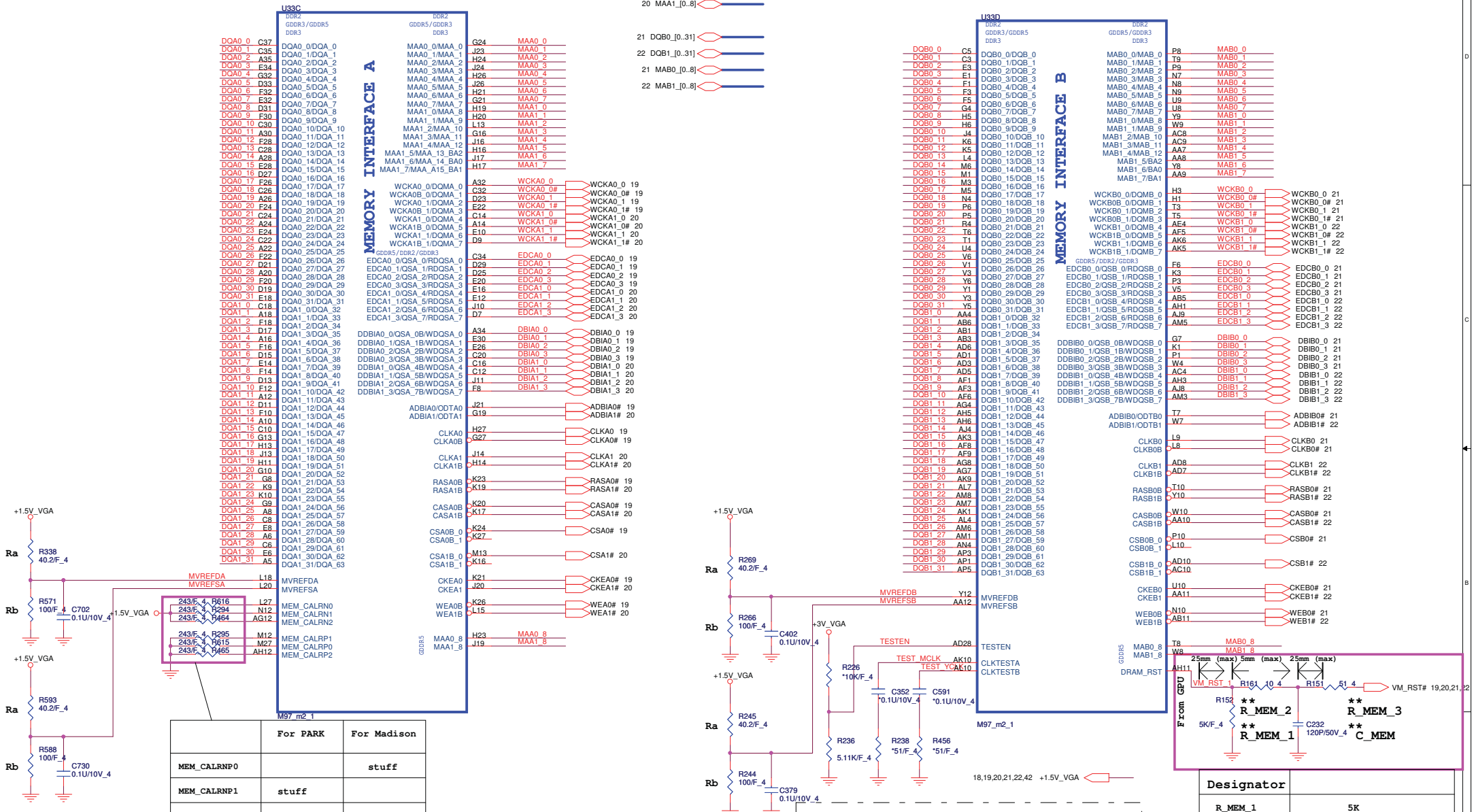

	For PARK	For Madison
MEM_CALRNP0		stuff
MEM_CALRNP1	stuff	
MEM_CALRNP2		stuff

DDR3/GDDR3 Memory Stuff Option

	GDDR5	GDDR3	DDR3
+1.5V_VGA	1.5V	1.8V/1.5V	1.5V
Ra	40.2R	40.2R	40.2R
Rb	100R	100R	100R

Place all these components very close to GPU (Within 25mm) and keep all component close to each Other (within 5mm) except Rser2

** This basic topology should be used for DRAM_RST for DDR3/GDDR3/GDDR5.These Capacitors and Resistor values are an example only. The Series R and || Cap values will depend on the DRAM load and will have to be calculated for different Memory ,DRAM Load and board to pass Reset Signal Spec.

Designator	
R_MEM_1	5K
R_MEM_2	10R
R_MEM_3	51R
C_MEM	120pF

N85/RD2

PROJECT : SPJ

Quanta Computer Inc.

Size	Document Number	Rev
Custom	Wishtler PRO (MEM)2/5	1A

Date: Thursday, October 07, 2010 Sheet 15 of 42

http://hobi-elektronika.net

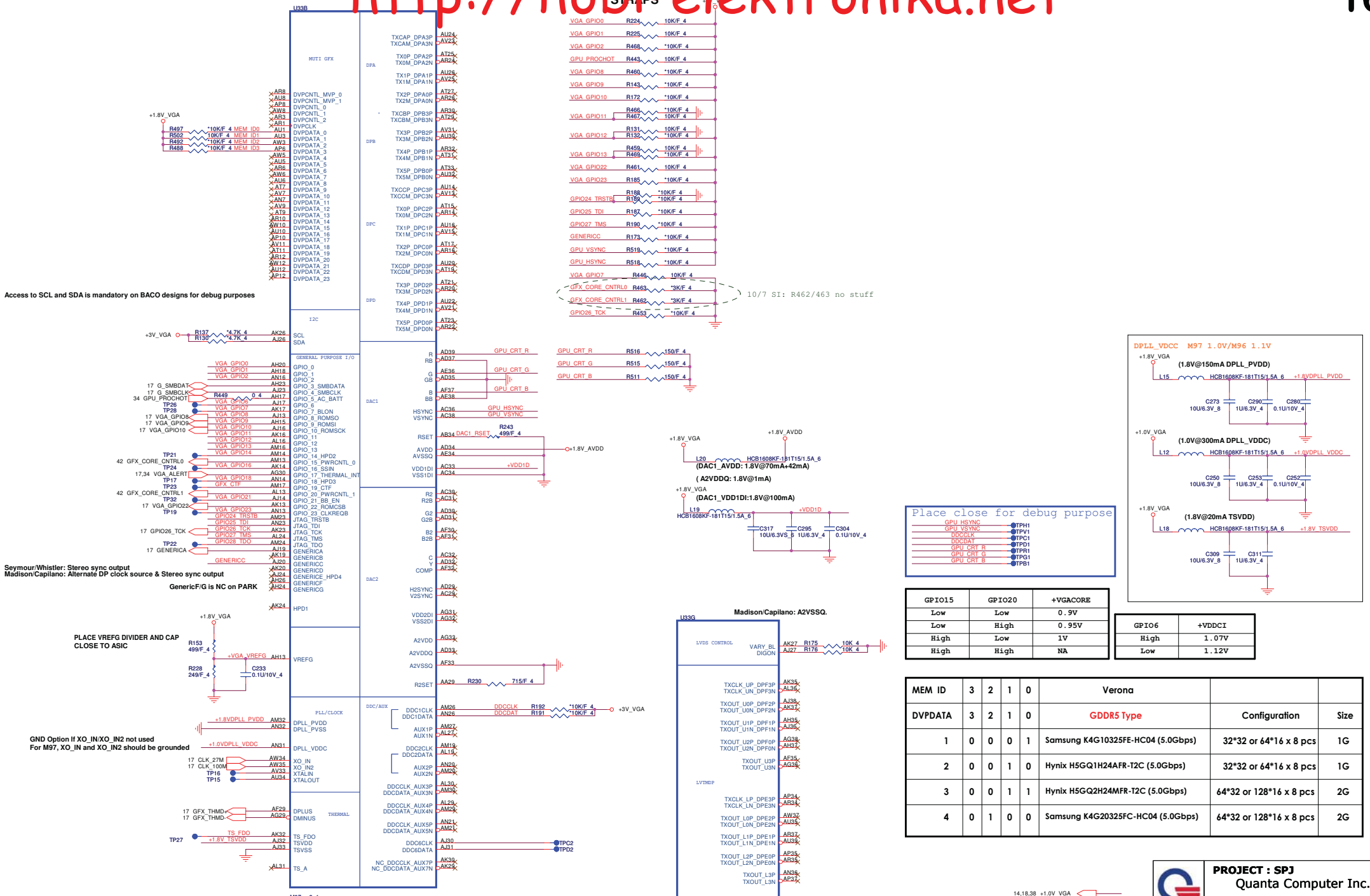

GPIO15	GPIO20	+VGACORE
Low	Low	0.9V
Low	High	0.95V
High	Low	1V
High	High	NA

GPIO6	+VDDCI
High	1.07V
Low	1.12V

MEM ID	3	2	1	0	Verona		
DVPDATA	3	2	1	0	GDDR5 Type	Configuration	Size
1	0	0	0	1	Samsung K4G10325FE-HC04 (5.0Gbps)	32*32 or 64*16 x 8 pcs	1G
2	0	0	1	0	Hynix H5GQ1H24AFR-T2C (5.0Gbps)	32*32 or 64*16 x 8 pcs	1G
3	0	0	1	1	Hynix H5GQ2H24MFR-T2C (5.0Gbps)	64*32 or 128*16 x 8 pcs	2G
4	0	1	0	0	Samsung K4G20325FC-HC04 (5.0Gbps)	64*32 or 128*16 x 8 pcs	2G

14,18,38 +1.0V_VGA
14,18,42 +1.8V_VGA
15,17,18,42 +3V_VGA

NB5/RD2

PROJECT : SPJ
Quanta Computer Inc.

Size	Document Number	Rev
Custom	Wishtler PRO (DISPLAY)3/5	1A

Date: Thursday, October 07, 2010 Sheet 16 of 42

http://hobi-elektronika.net

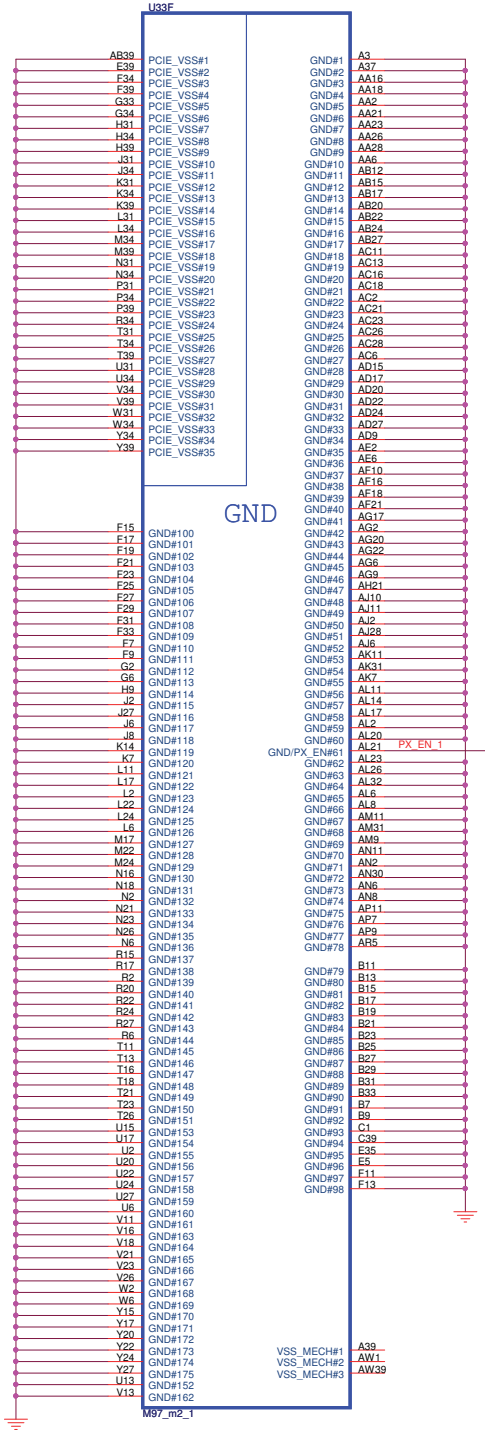

Table 3-34 ROM Configuration

Manufacturer	Part Number	Size	CONFIG[2:0]
Atmel	AT25F512	512 kbit	001
	AT25F512A	512 kbit	010
	AT25F1024	1 Mbit	011
	AT26F1024A	1 Mbit	011
	AT25F2048	2 Mbit	011
	AT25F4096	4 Mbit	011
ST Microelectronics	M25P05A	512 kbit	100
	M25P10A	1 Mbit	101
	M25P20	2 Mbit	101
	M25P40	4 Mbit	101
	M25P80	8 Mbit	101
Silicon Storage Technology	SST25VF512	512 kbit	010
	SST25VF010	1 Mbit	011
	SST25VF020	2 Mbit	011
	SST25VF040	4 Mbit	011
Winbond Electronics Corporation	W45B512	512 kbit	110
	W45B012	1 Mbit	111
YMC	Y25LF05	512 kbit	010
	SA25C020	2 Mbit	011
PMC	Pm25LV512	512 kbit	100
	Pm25LV010	1 Mbit	101

SSEL1(Pin3)	SSEL0(Pin7)	Spread Percent(Pin5)
Low	Low	No Spread/Off
Low	Floating	-0.5%
Low	High	-2.5%
Floating	Low	-0.25%
Floating	Floating	-0.75%
Floating	High	-1.00%
High	Low	-1.5%
High	Floating	-2.0%
High	High	-3.0%

BACO Design control

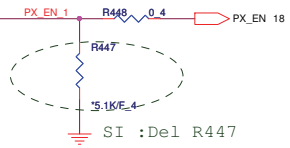

27MHz + 100Mhz OSC Option

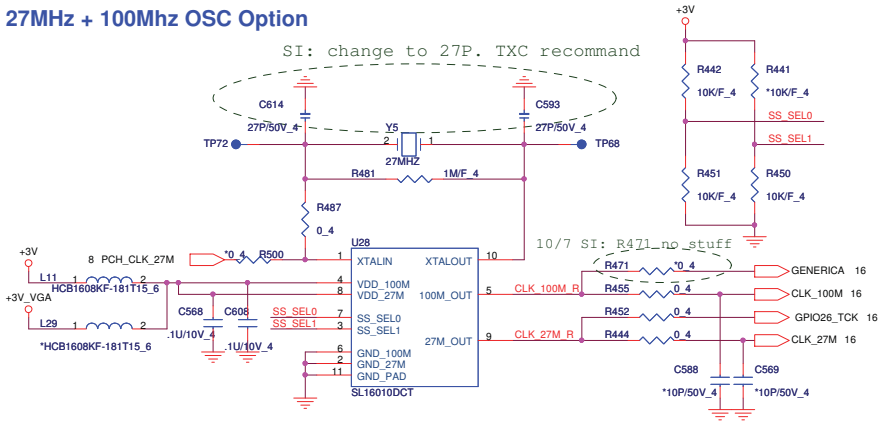

For GDDR5 EEPROM

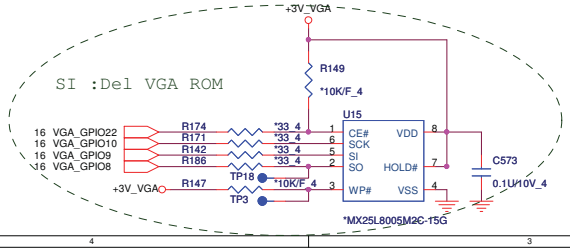

GPU Thermal Sensor

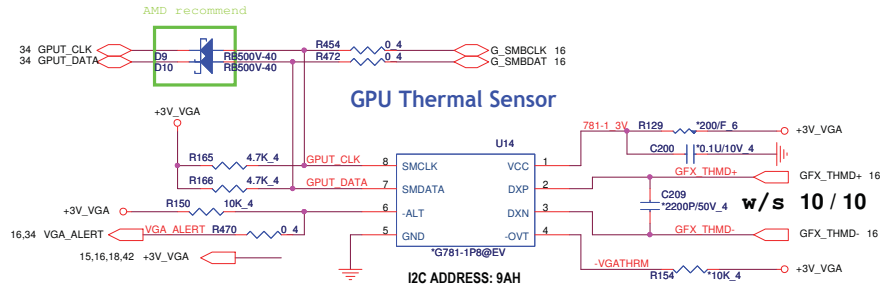

NB5/RD2	PROJECT : SPJ Quanta Computer Inc.	
Size Custom	Document Number Wishtler PRO (GD&Str)4/5	Rev 1A
Date: Thursday, October 07, 2010	Sheet 17 of 42	

http://hobi-elektronika.net

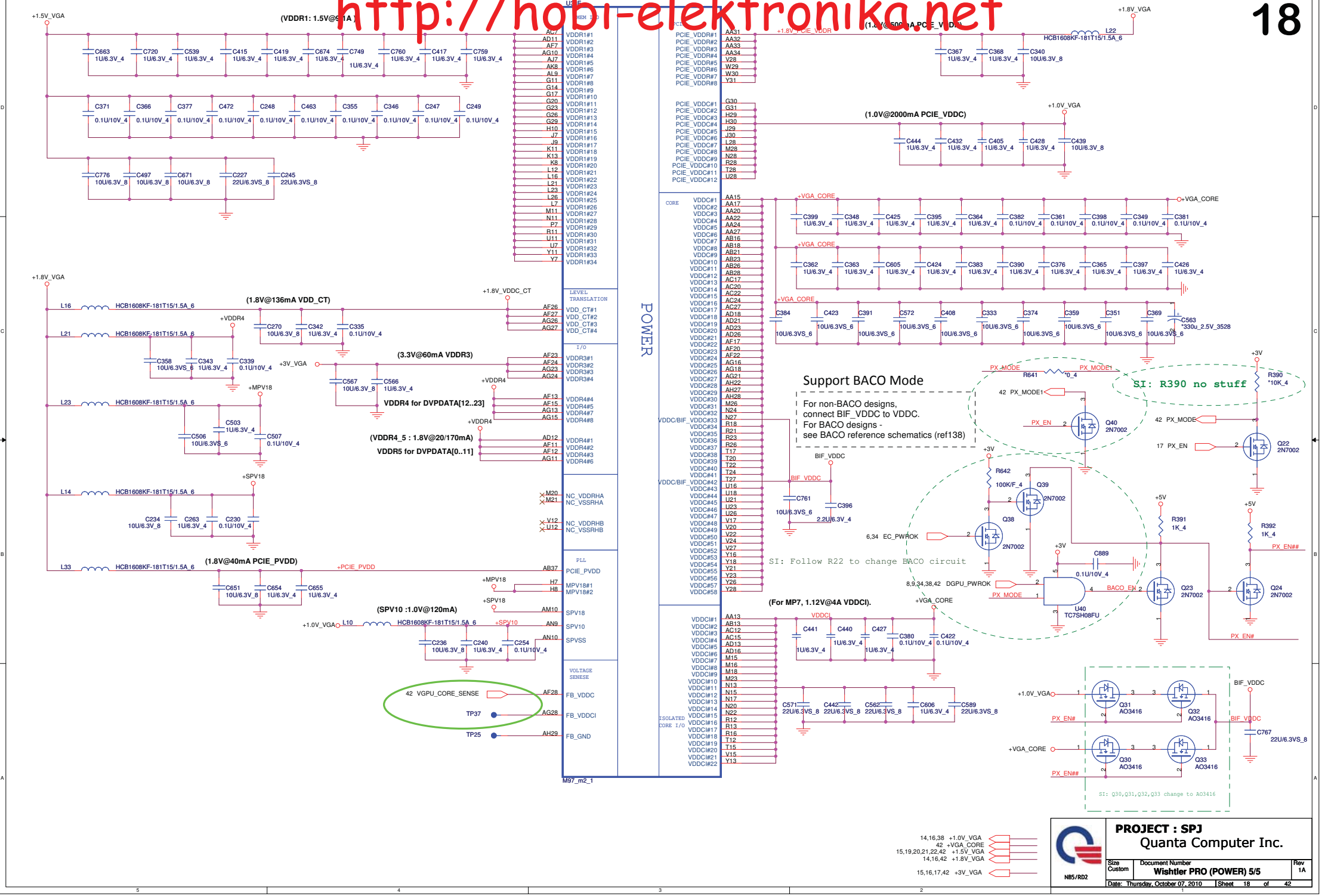

http://hobi-elektronika.net

1GB GDDR5 : CHANNEL A-0 (64Mx16)

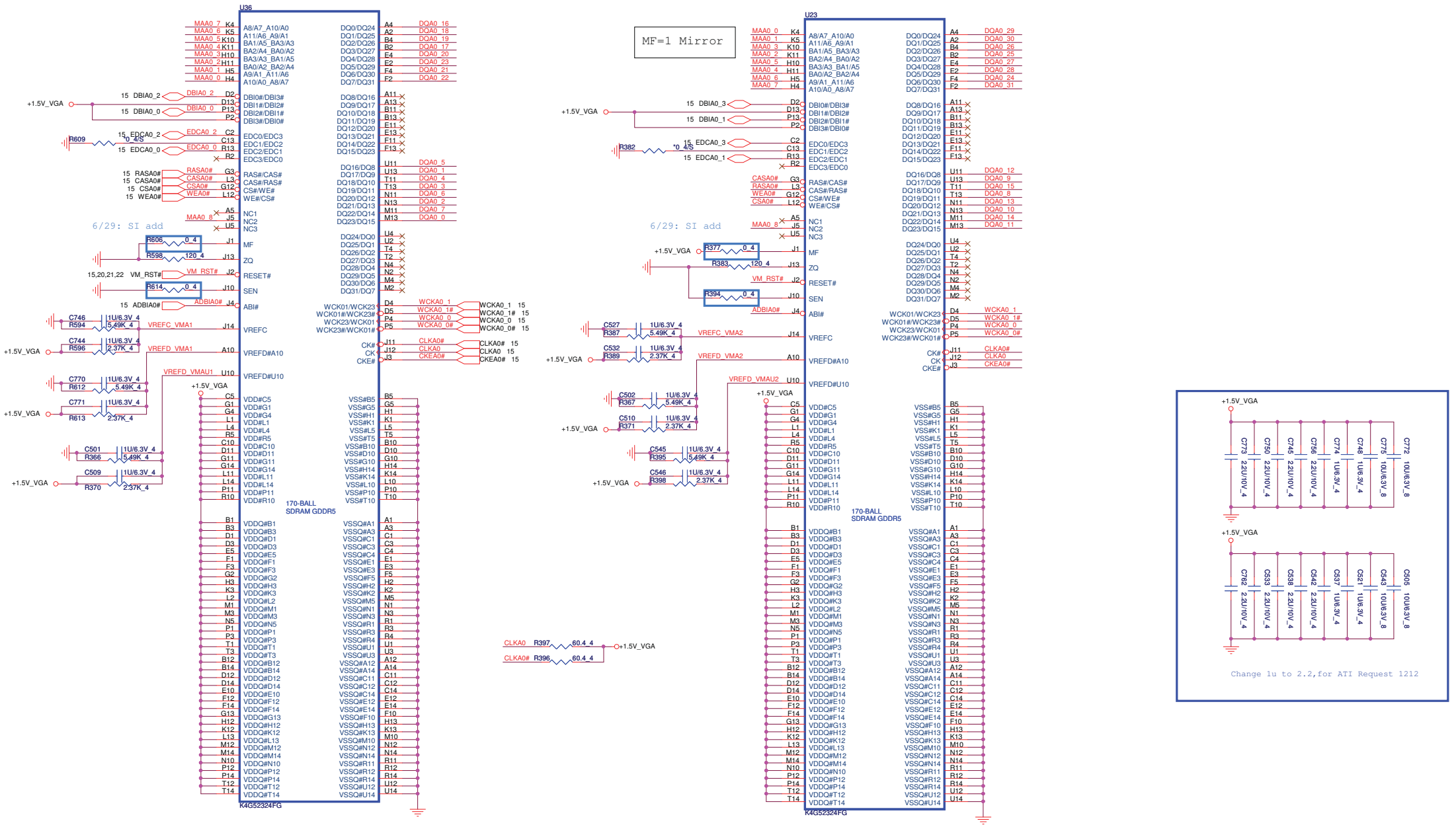

PROJECT : SPJ
Quanta Computer Inc.

Size	Document Number	Rev
Custom	VRAM-A0	1A

NB5/RD2

Date: Thursday, October 07, 2010 | Sheet 19 of 42

http://hobi-elektronika.net

1GB GDDR5 - CHANNEL A (64M x 16)

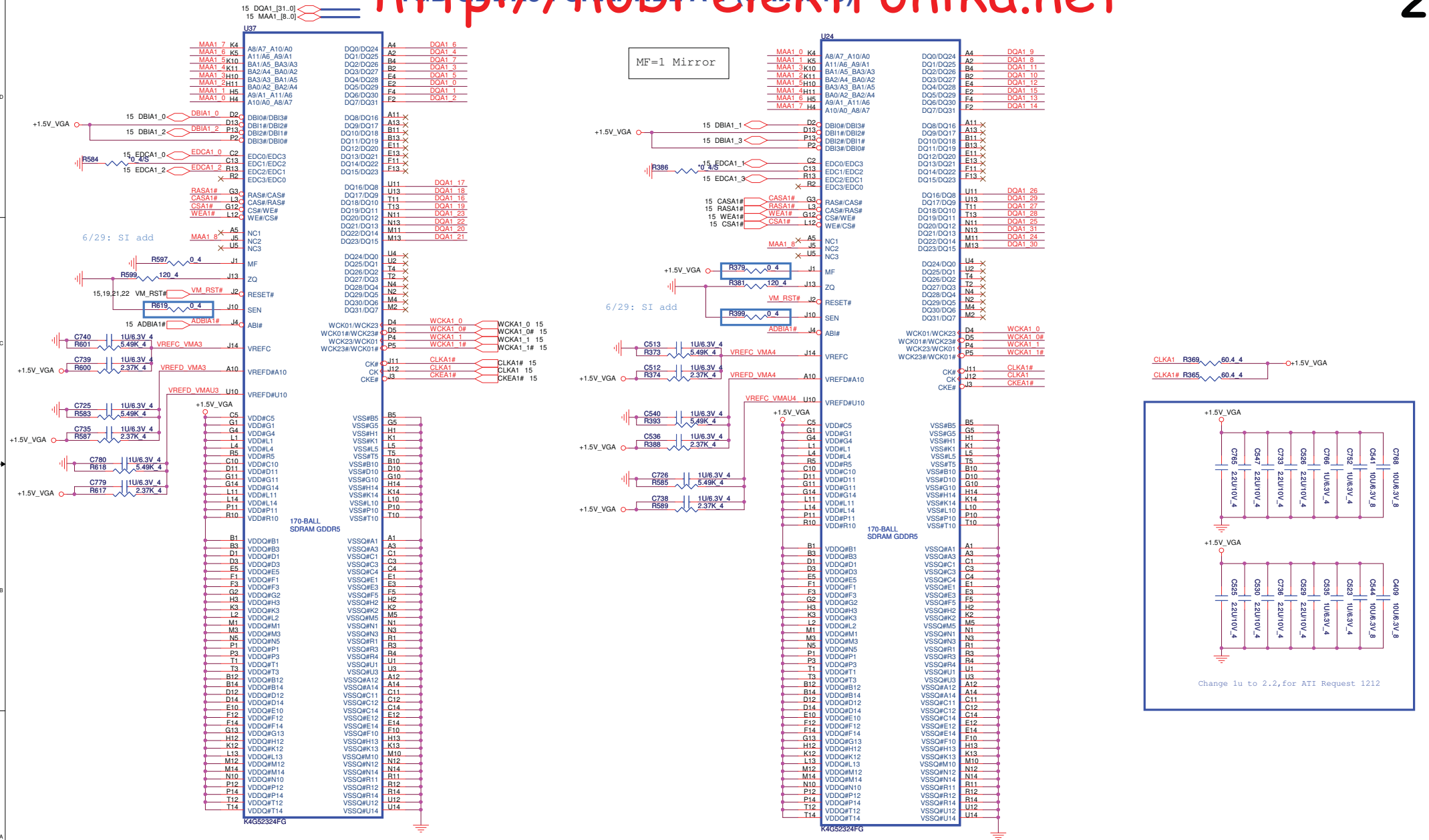

PROJECT : SPJ
Quanta Computer Inc.

Size	Document Number	Rev
Custom	VRAM-A1	1A

NB5/RD2

Date: Thursday, October 07, 2010 | Sheet 20 of 42

http://hobi-elektronika.net

1GB GDDR5 - CHANNEL B - (64M x 16)

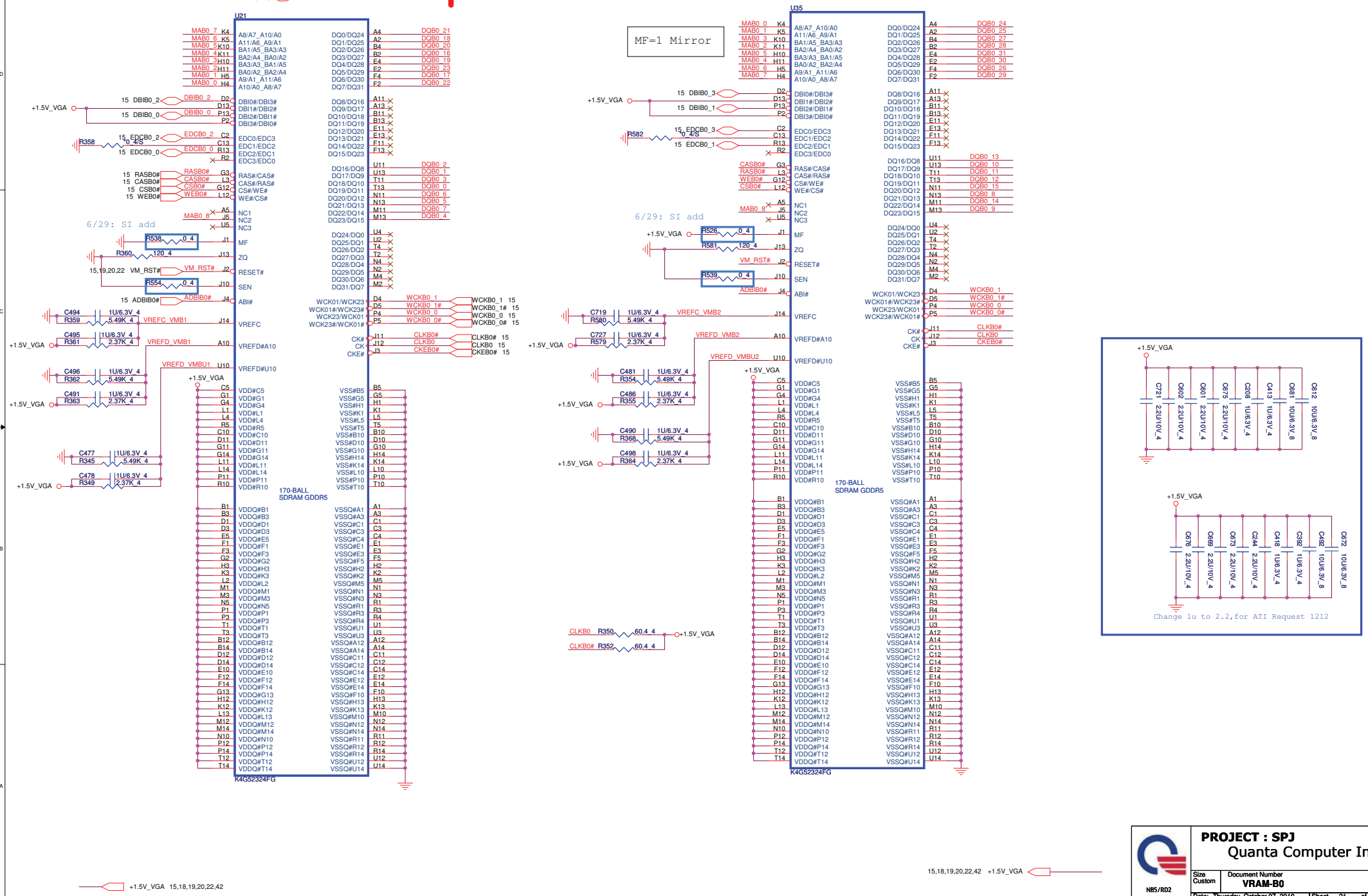

PROJECT : SPJ
Quanta Computer Inc.

Size	Document Number	Rev
Custom	VRAM-B0	1A

NB5/RD2

Date: Thursday, October 07, 2010 | Sheet 21 of 42

http://hobi-elektronika.net

1GB GDDR5 : CHANNEL B-1 (64M x 16)

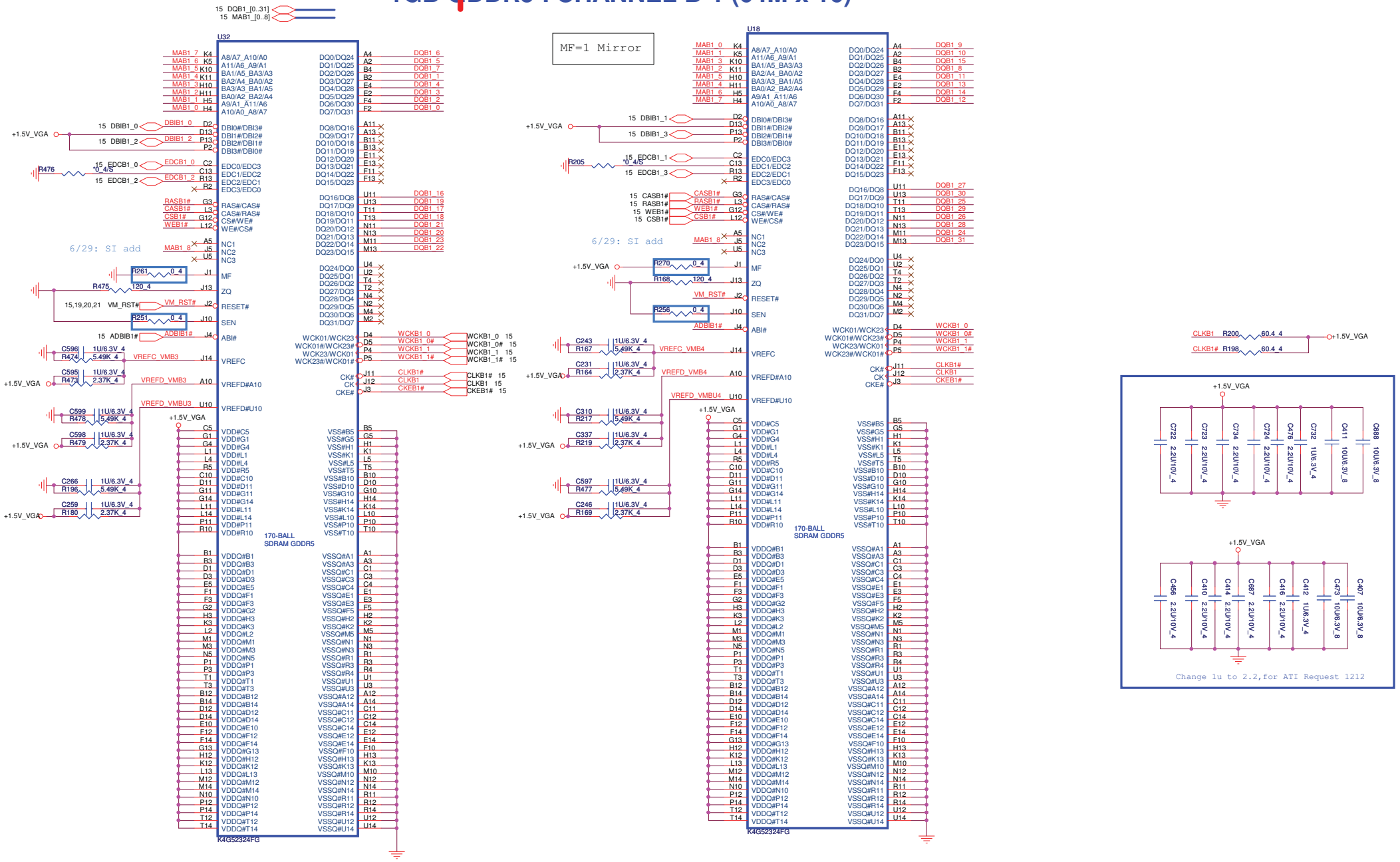

PROJECT : SPJ
Quanta Computer Inc.

Size	Document Number	Rev
Custom	VRAM-B1	1A

NB5/RD2

Date: Thursday, October 07, 2010 | Sheet 22 of 42

http://hobi-elektronika.net

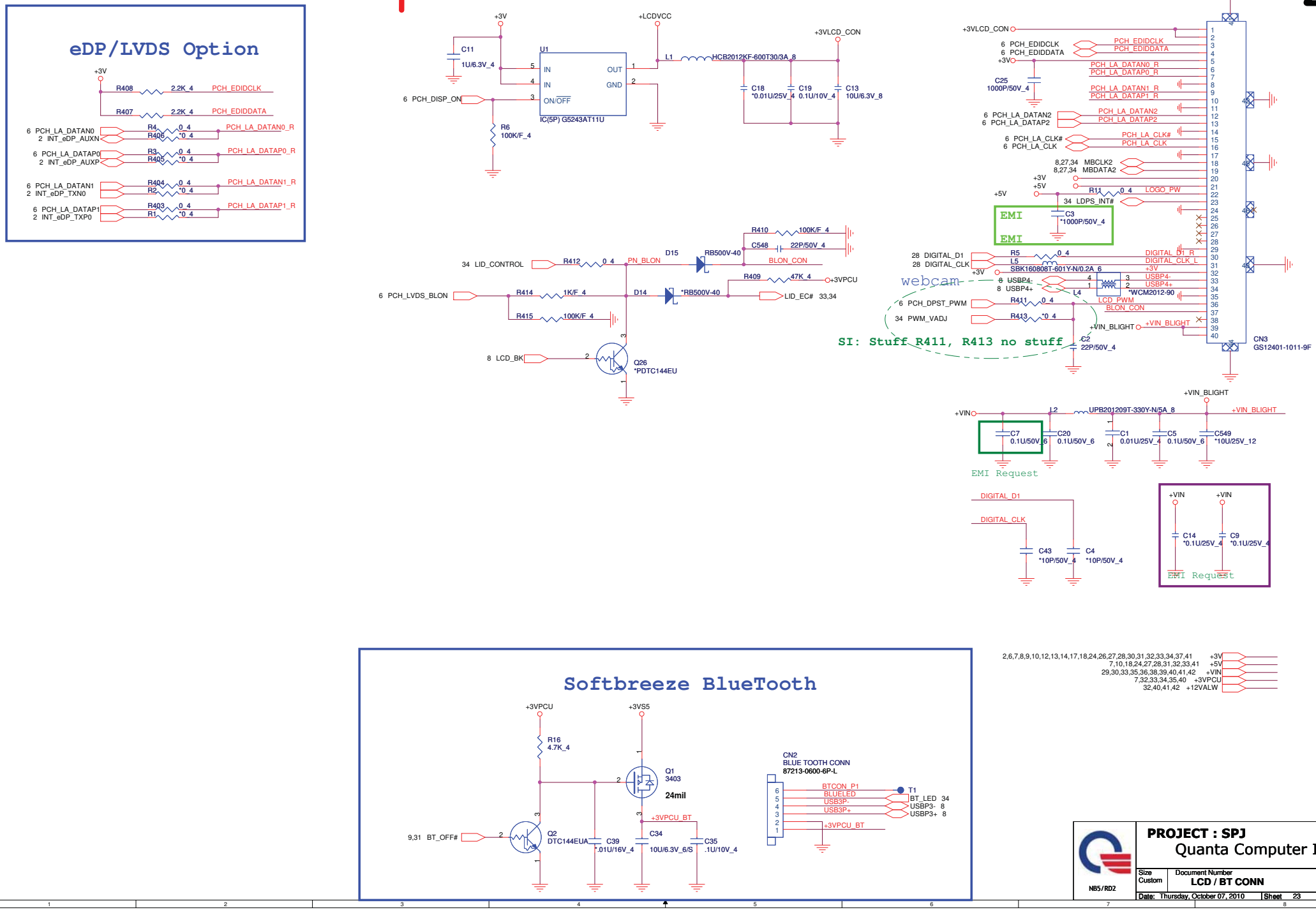

http://hobi-elektronika.net

Standard Display Port Connector

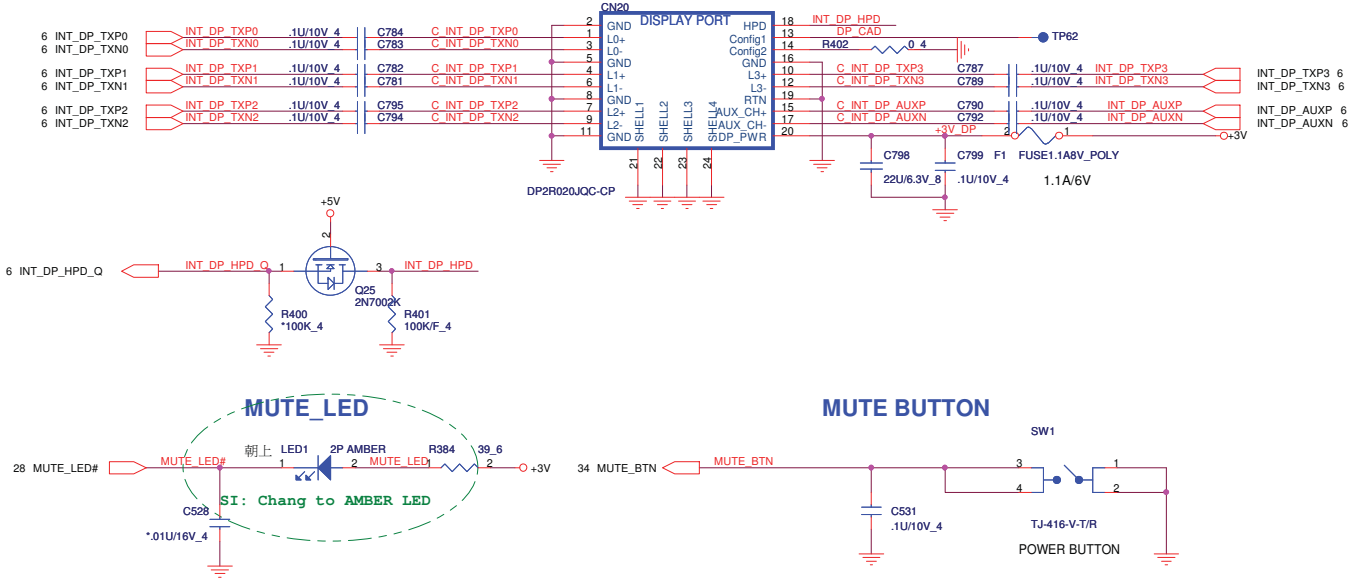

NB5/RD2	**PROJECT : SPJ** Quanta Computer Inc.	
Size Custom	Document Number **eDP & Display Conn./ LED**	Rev 1A
Date: Friday, October 08, 2010	Sheet 24 of 42	

http://hobi-elektronika.net

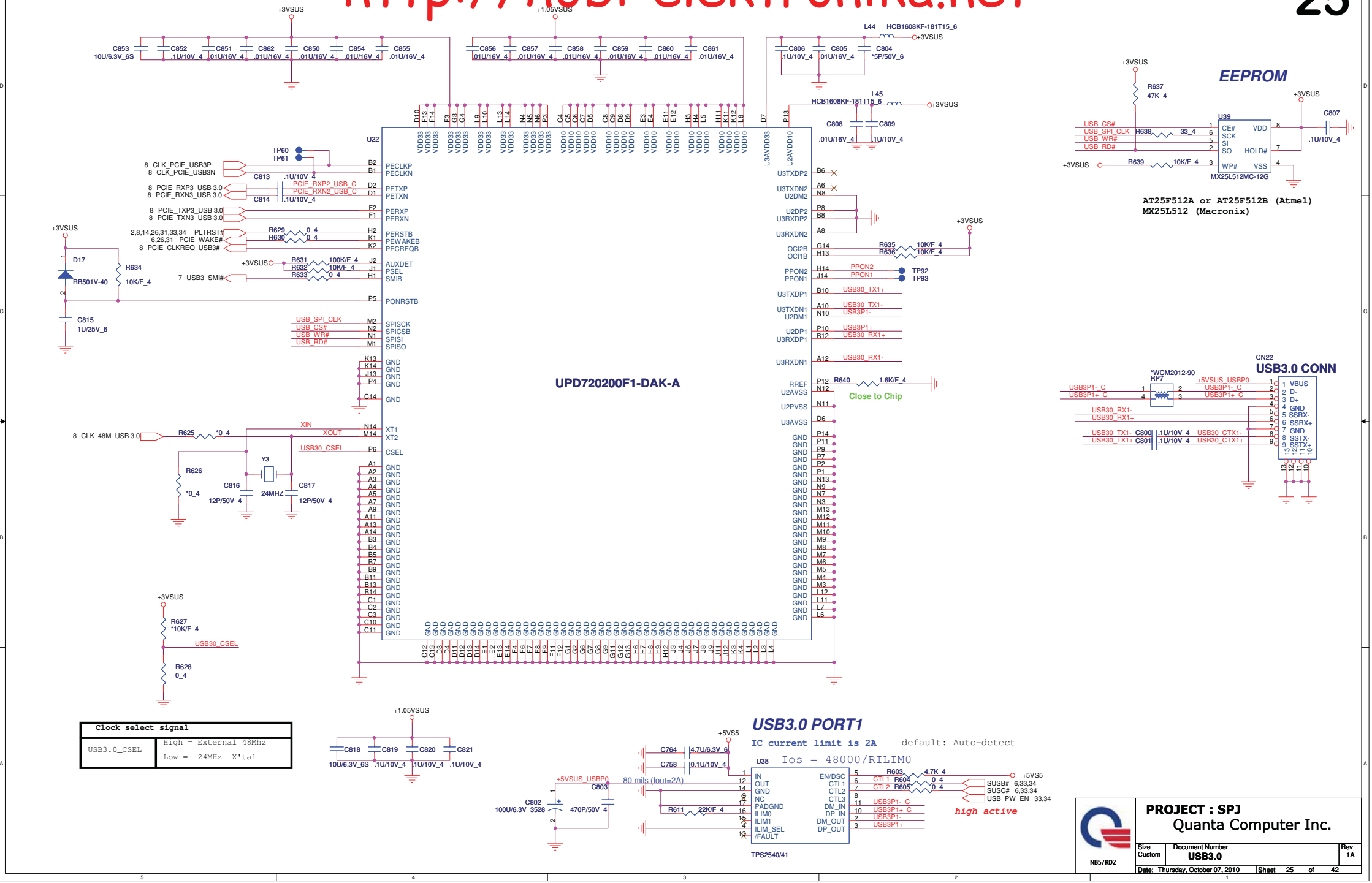

http://hobi-elektronika.net

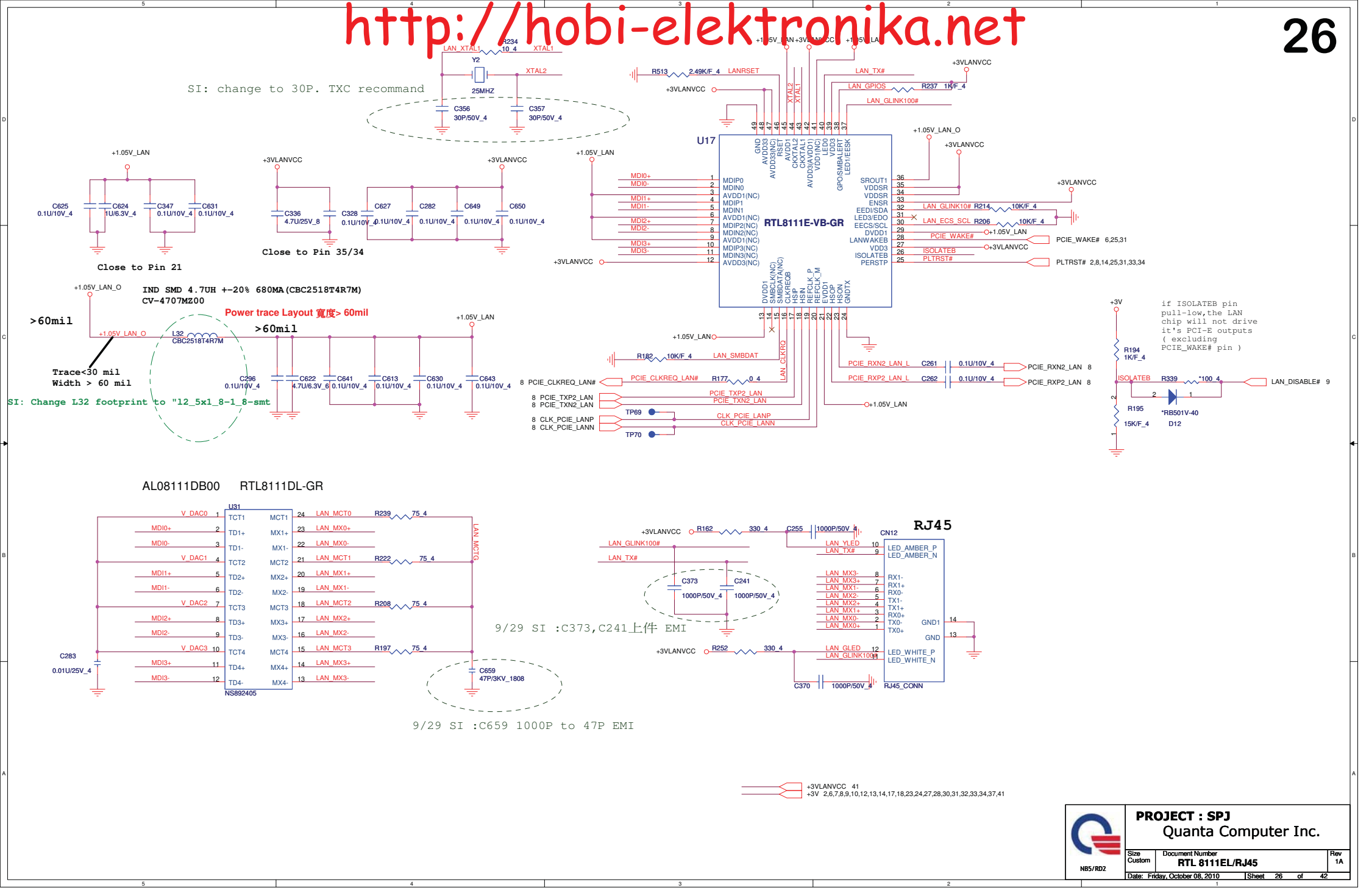

PROJECT : SPJ
Quanta Computer Inc.

Size	Document Number	Rev
Custom	RTL 8111EL/RJ45	1A

Date: Friday, October 08, 2010 Sheet 26 of 42

NB5/RD2

http://hobi-elektronika.net

SATA_1 HDD CONNECTOR

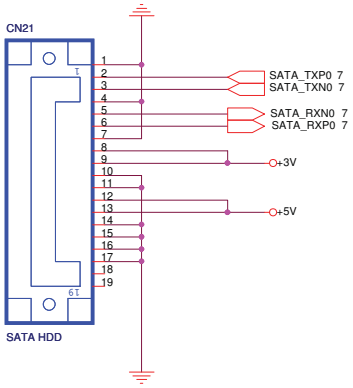

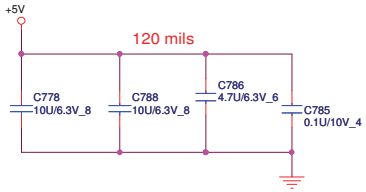

SATA_2 ODD CONNECTOR

2.5A >100mils TO M/B

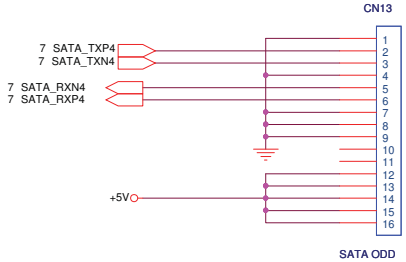

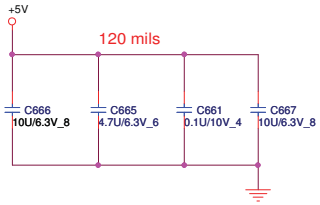

Accelerometer Sensor

SGT-HP3DCTR interrupt pin default is low / active Hi , BIOS need to programming 22h to change status from active Hi to low

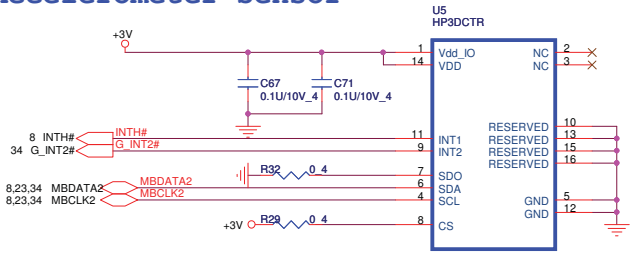

Pin 12: Low 38hex

Pin 12: unconnected/floating 3Ahex

NB5/RD2	PROJECT : SPJ Quanta Computer Inc.	
Size Custom	Document Number HDD/ODD/G-Sen	Rev 1A
Date: Thursday, October 07, 2010	Sheet 27 of 42	

http://hobi-elektronika.net

2,6,7,8,9,10,12,13,14,17,18,23,24,26,27,30,31,32,33,34,37,41 +3V
30 +4.75VAVDD
7,10,18,23,24,27,31,32,33,41 +5V

Headphone singal routing:
A minimum of 15 mils separation should be used between L/R singnals to audio jacks and docks.

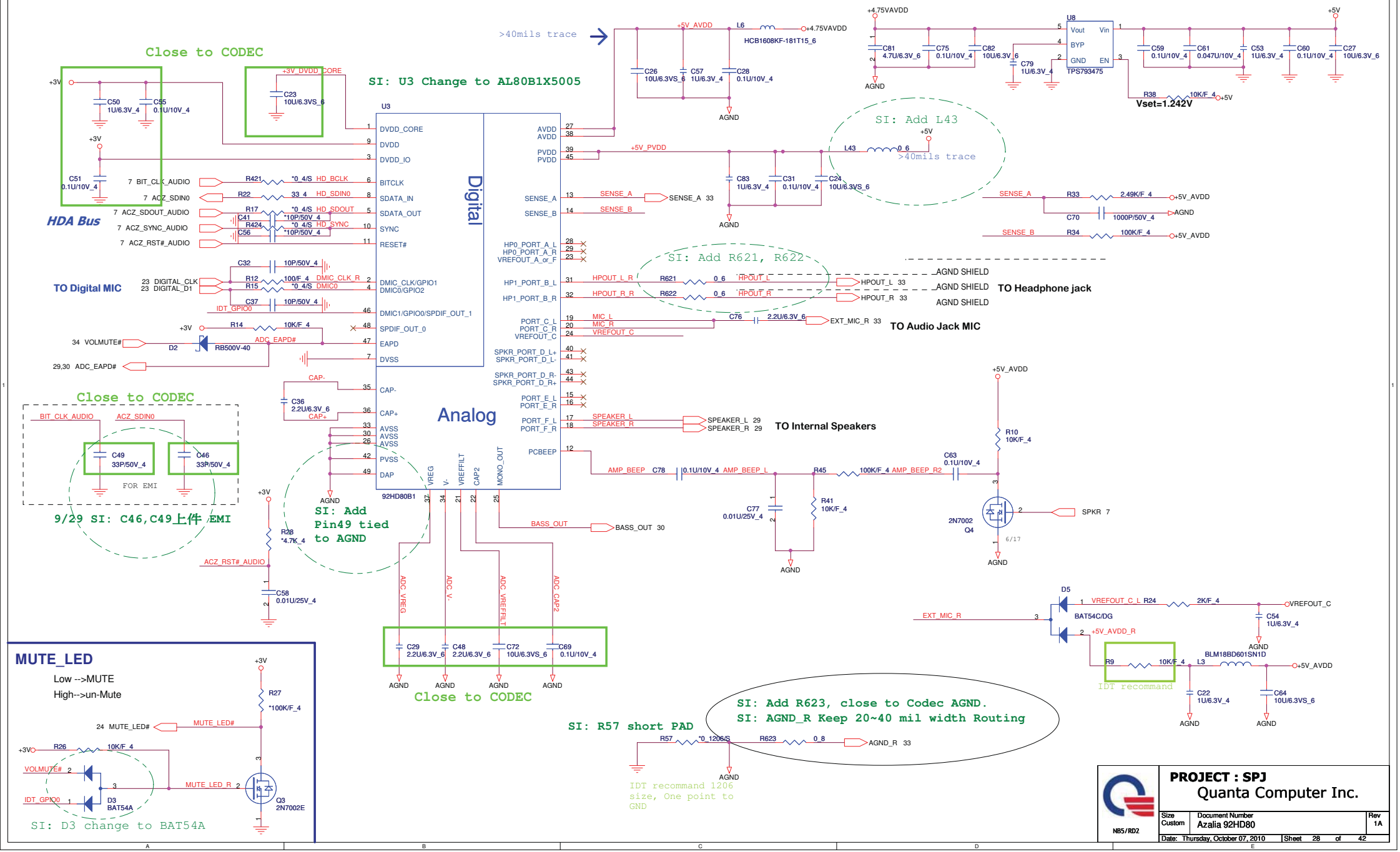

http://hobi-elektronika.net

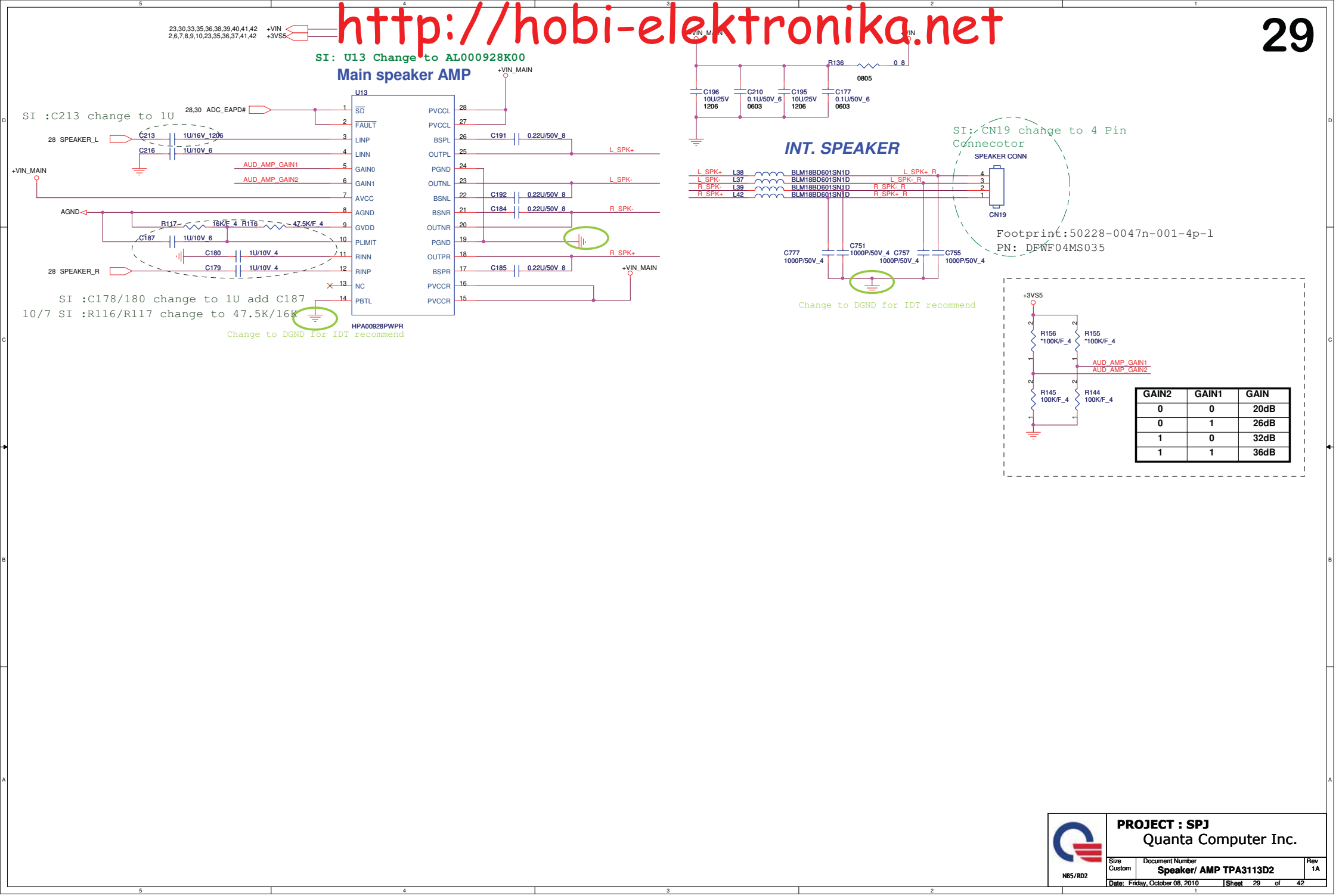

GAIN2	GAIN1	GAIN
0	0	20dB
0	1	26dB
1	0	32dB
1	1	36dB

NB5/RD2

PROJECT : SPJ

Quanta Computer Inc.

Size	Document Number	Rev
Custom	Speaker/ AMP TPA3113D2	1A

Date: Friday, October 08, 2010 Sheet 29 of 42

http://hobi-elektronika.net

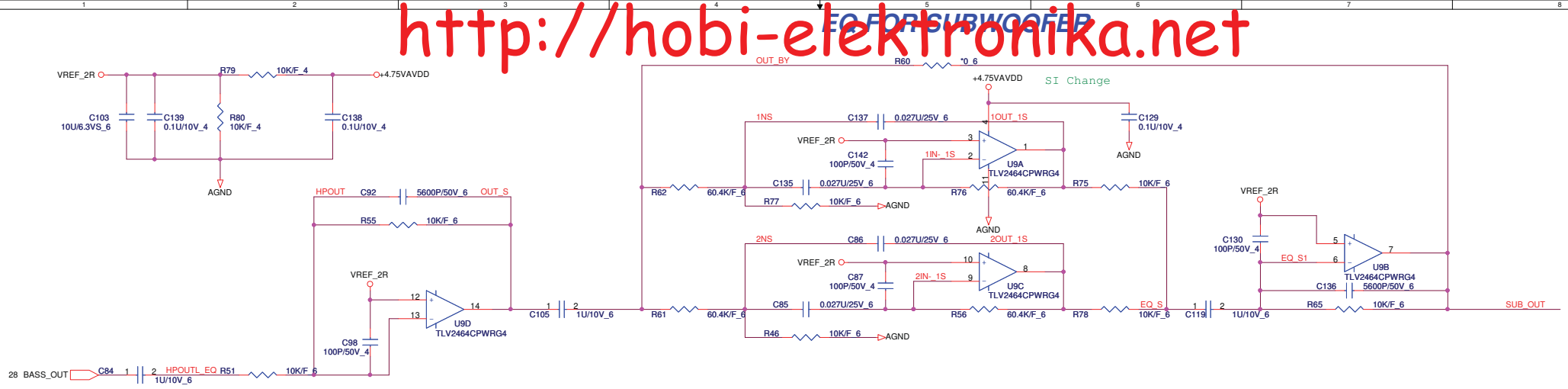

Sub-Woofer power

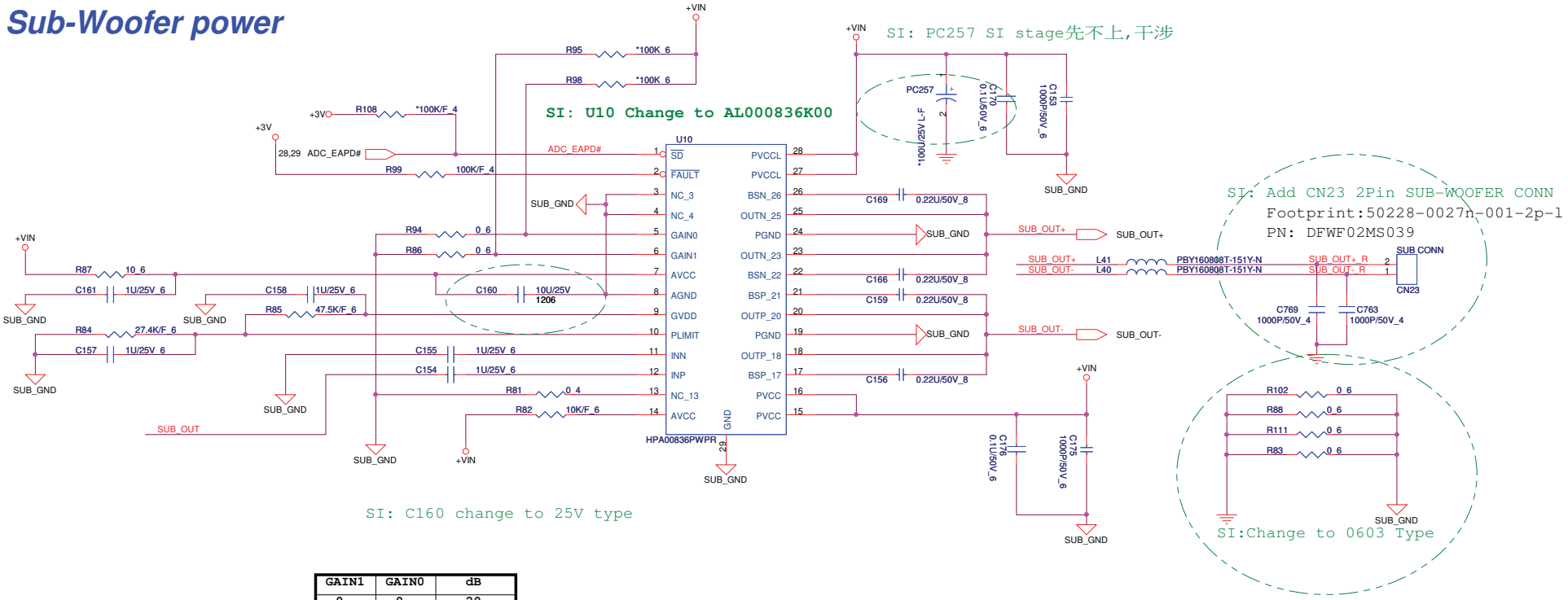

GAIN1	GAIN0	dB
0	0	20
0	1	26
1	0	32
1	1	36

+3V 2,6,7,8,9,10,12,13,14,17,18,23,24,26,27,28,31,32,33,34,37,41
+4.75VAVDD 28
+VIN 23,29,33,35,36,38,39,40,41,42

PROJECT : SPJ
Quanta Computer Inc.

Size	Document Number	Rev
Custom	SUBWOOFER (EQ & AMP.)	1A

NB5/RD2

Date: Thursday, October 07, 2010 Sheet 30 of 42

http://hobi-elektronika.net

Mini PCI-E Card 1 WLAN

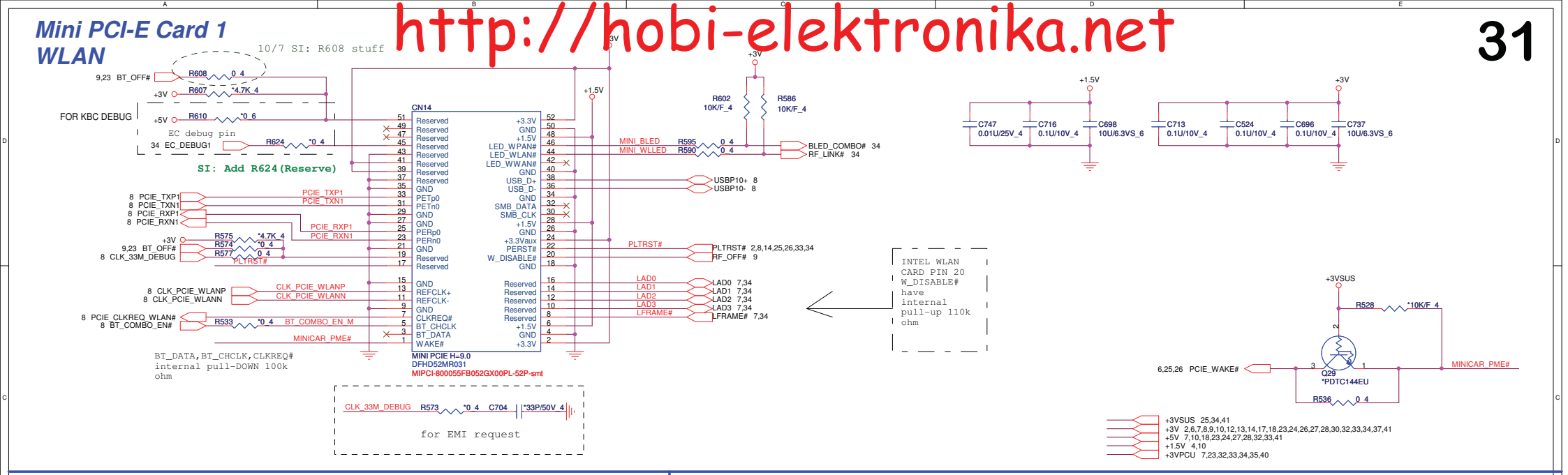

CPU FAN

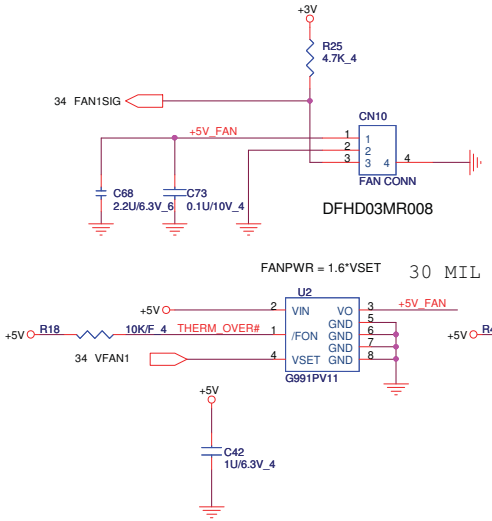

GPU FAN

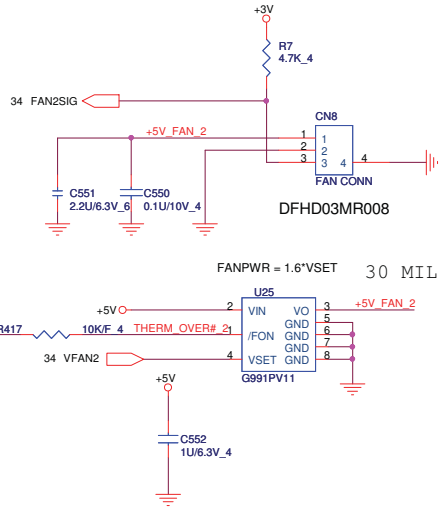

NB5/RD2	**PROJECT : SPJ** Quanta Computer Inc.	
Size Custom	Document Number **MINI PCIE CONN/FAN**	Rev 1A
Date: Friday, October 08, 2010	Sheet 31 of 42	

http://hobi-elektronika.net

KEYBOARD PULL-UP

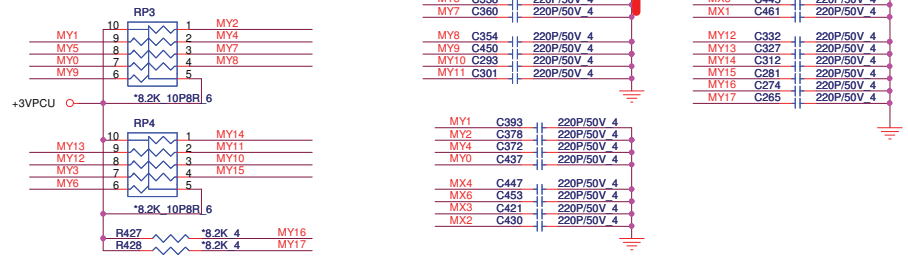

clear ABS 758 resin for key cap.

7 LEDs for 15.4" (total LED current 140mA)

KB backlight for 15"

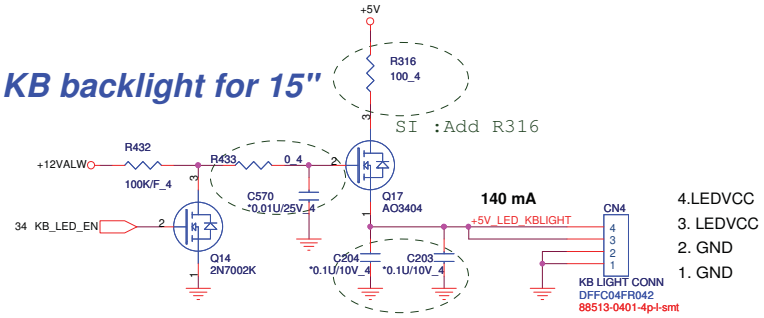

SI :R433 change to 0 ohm

SI :Del C570,C204,C203

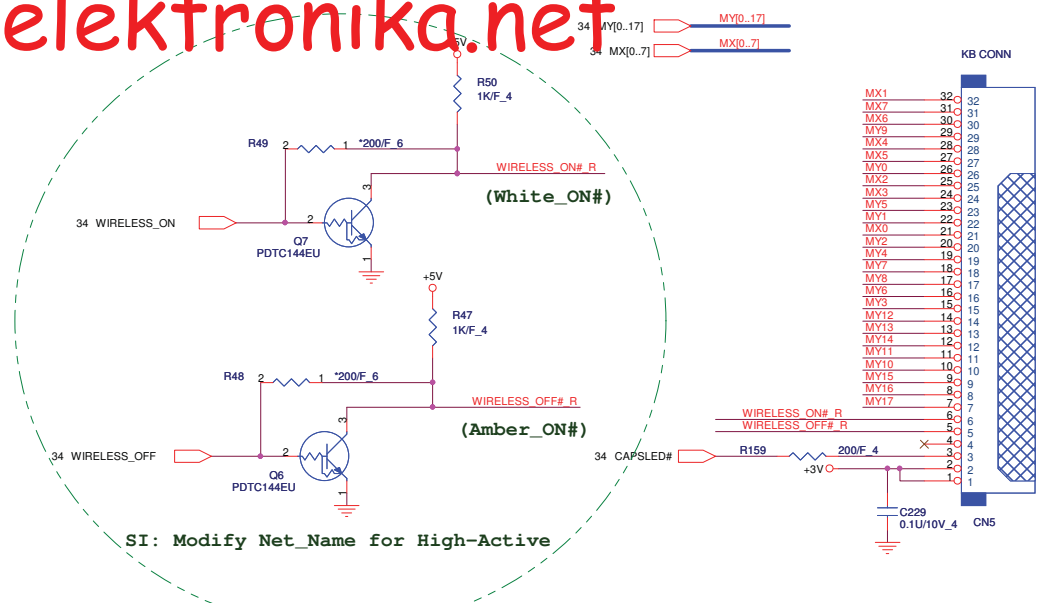

PIN 8,7,4 NC

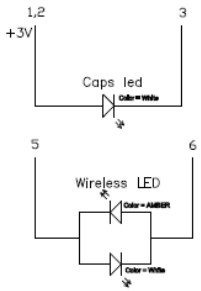

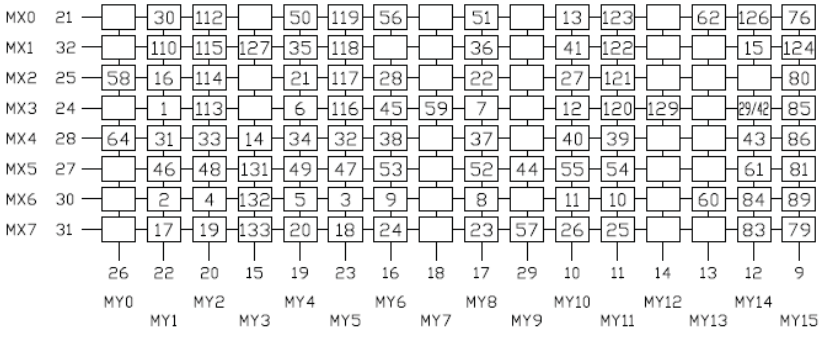

PCB Holes

CPU

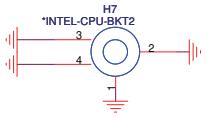

GPU

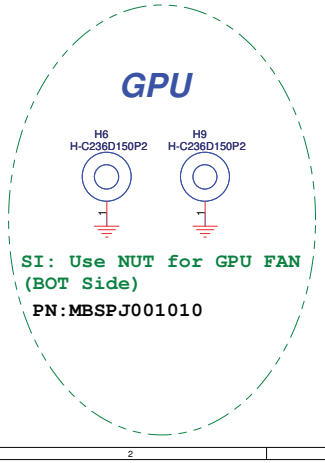

Wireless

FAN

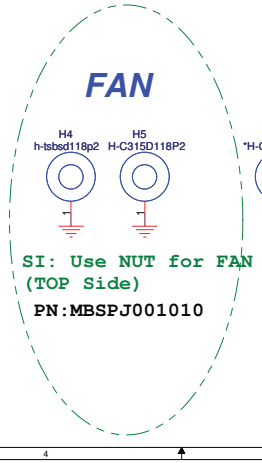

Hole

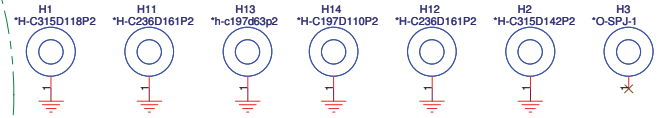

+3V 2,6,7,8,9,10,12,13,14,17,18,23,24,26,27,28,30,31,33,34,37,41
+5V 7,10,18,23,24,27,28,31,33,41
+3VPCU 7,23,33,34,35,40
+12VALW 40,41,42

NB5/RD2

PROJECT : SPJ
Quanta Computer Inc.

Size	Document Number	Rev
Custom	KB/Hyper power/Hole	1A

Date: Thursday, October 07, 2010 Sheet 32 of 42

http://hobi-elektronika.net

To HDMI/ 2x USB2.0/Audio/HDD_LED/PowerLED

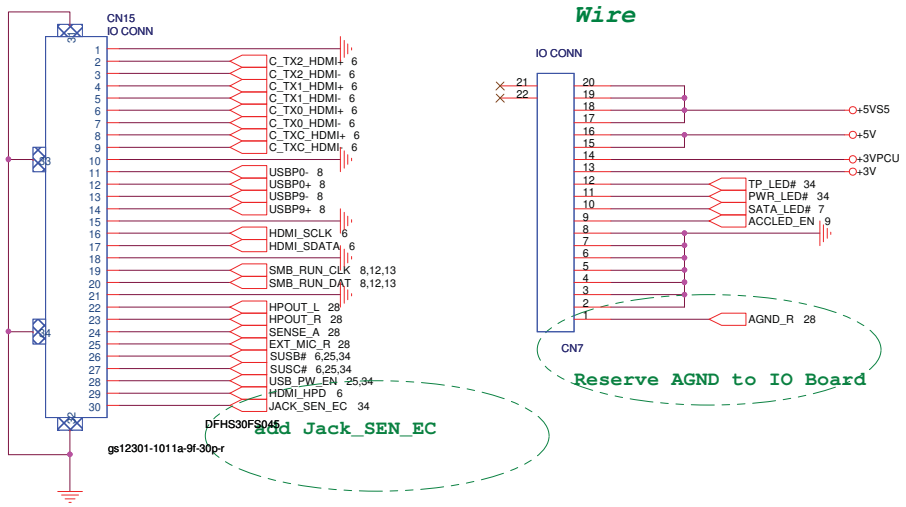

Wire

SI: Change CN15 Connector type, follow
R11 LCD Conn. PN DFHS30FS045

To PW_BT/Quick Board

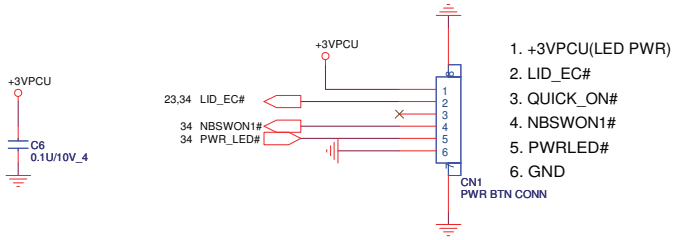

To CR Board

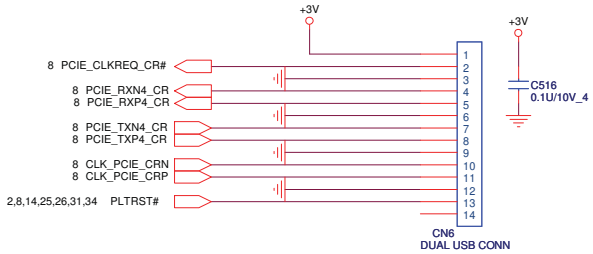

To JogDial Module

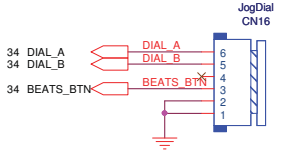

SI :Del C10

9/29 SI :C8,C12,C15土件 EMI

8/11 for EMI(DB)

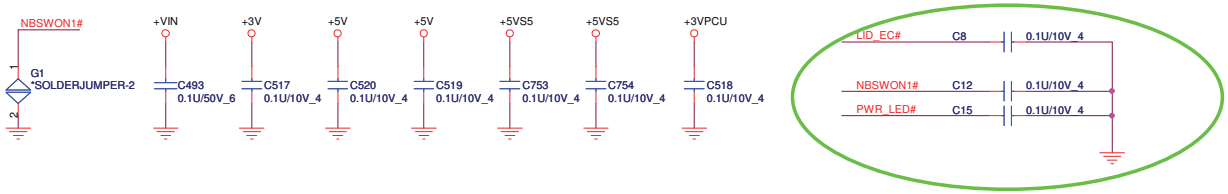

NB5/RD2	PROJECT : SPJ Quanta Computer Inc.	
Size Custom	Document Number BTB Connectors	Rev 1A
Date: Thursday, October 07, 2010	Sheet 33 of 42	

http://hobi-elektronika.net

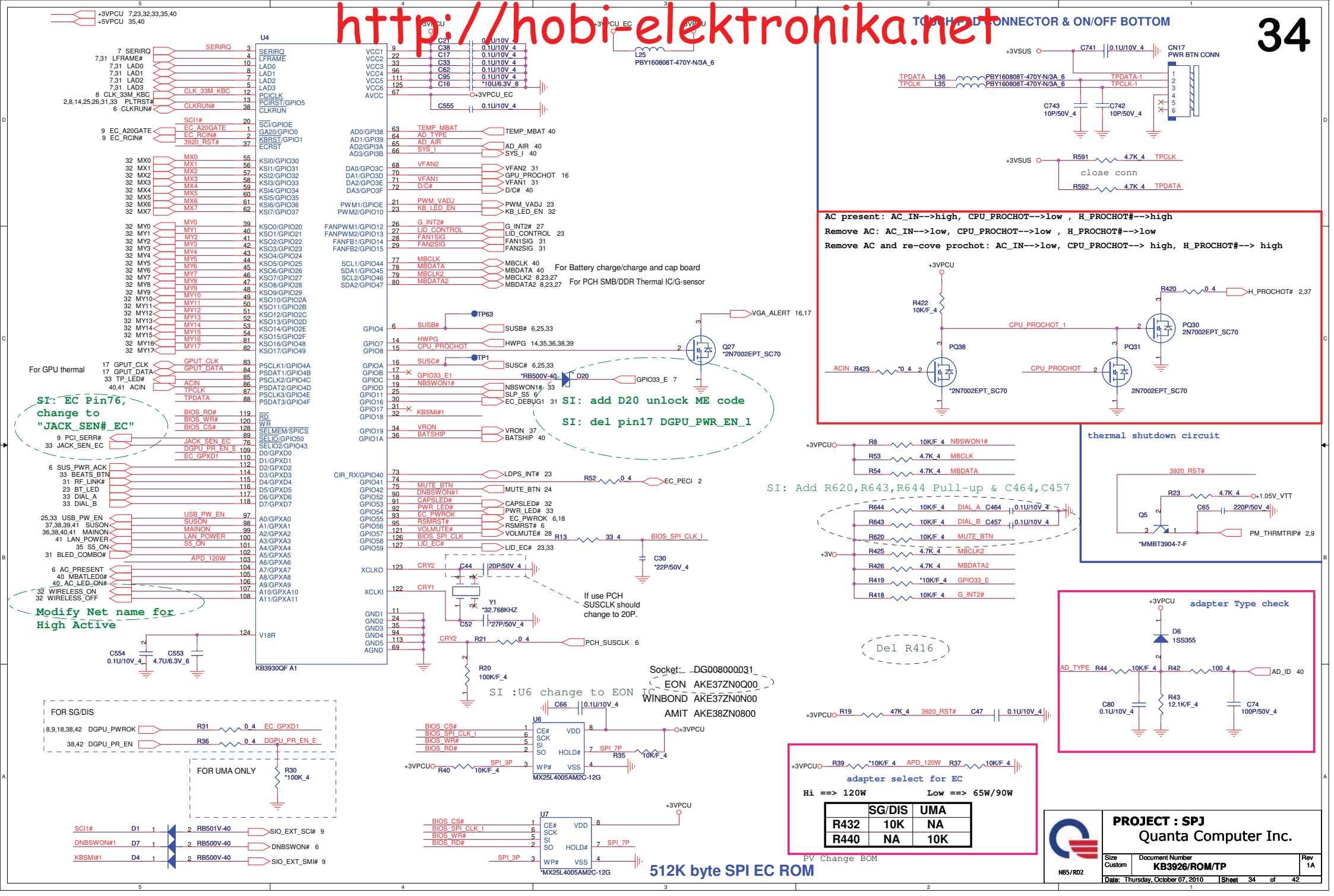

http://hobi-elektronika.net

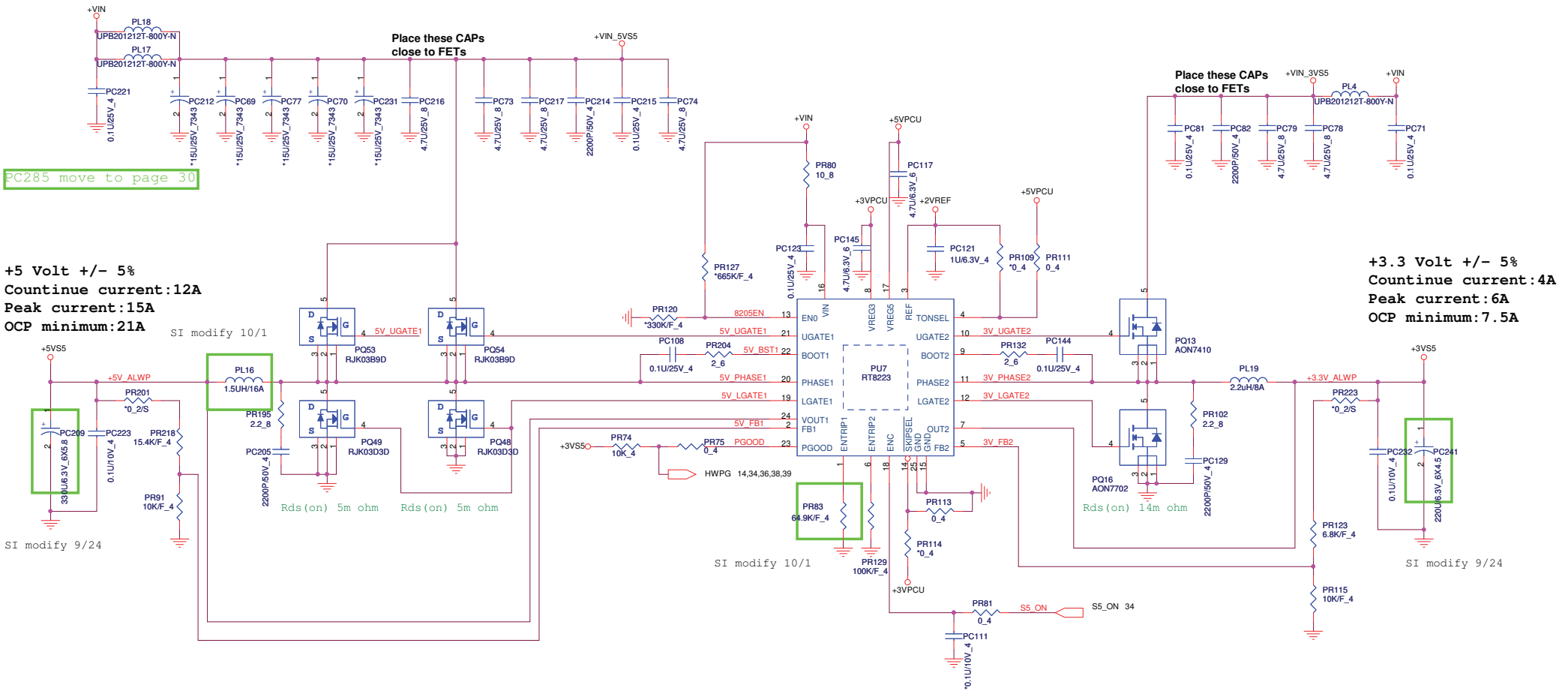

PROJECT : SPJ

Quanta Computer Inc.

Size	Document Number	Rev
Custom	+5V/+3V (RT8206B)	1A

Date: Thursday, October 07, 2010 | Sheet 35 of 42

N85/RD2

http://hobi-elektronika.net

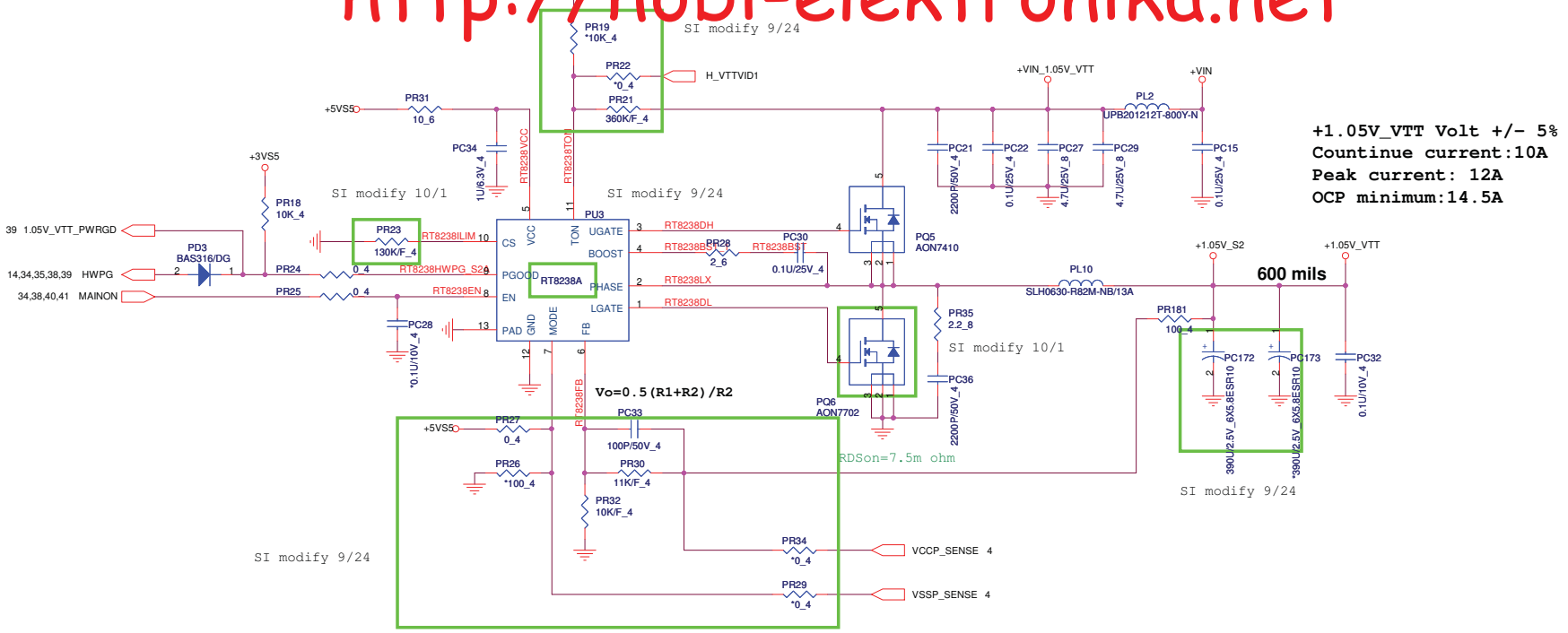

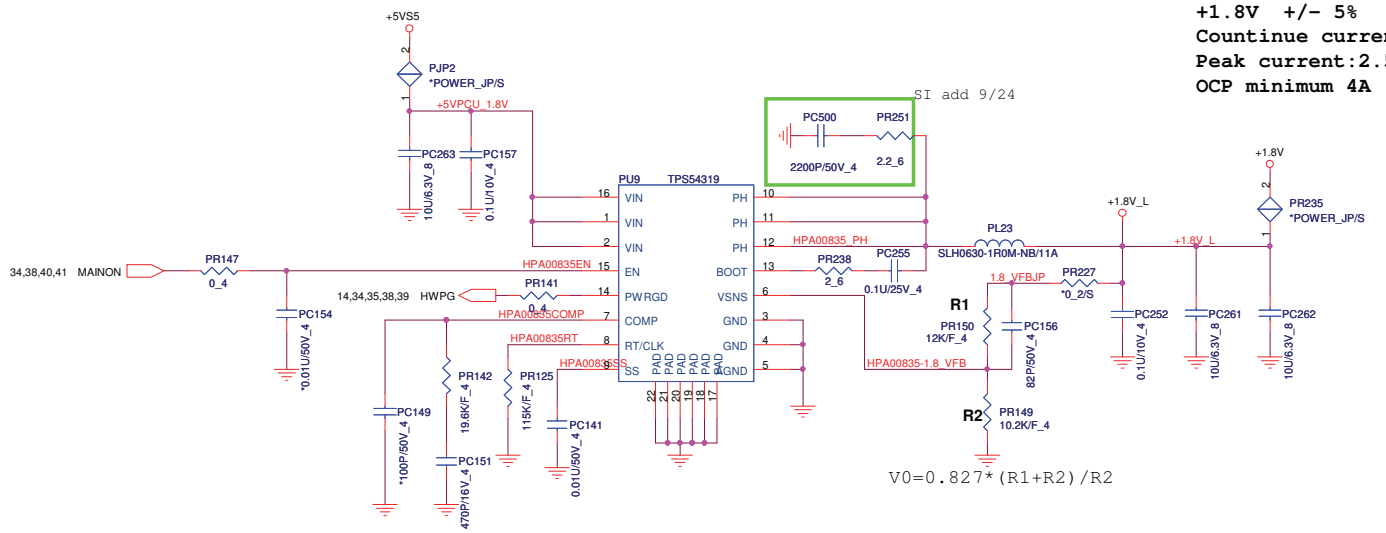

PROJECT : SPJ
Quanta Computer Inc.

Size	Document Number	Rev
Custom	+1.05V_VTT(RT8240B)/+1.8V	1A

NB5/RD2

Date: Thursday, October 07, 2010 Sheet 36 of 42

http://hobi-elektronika.net

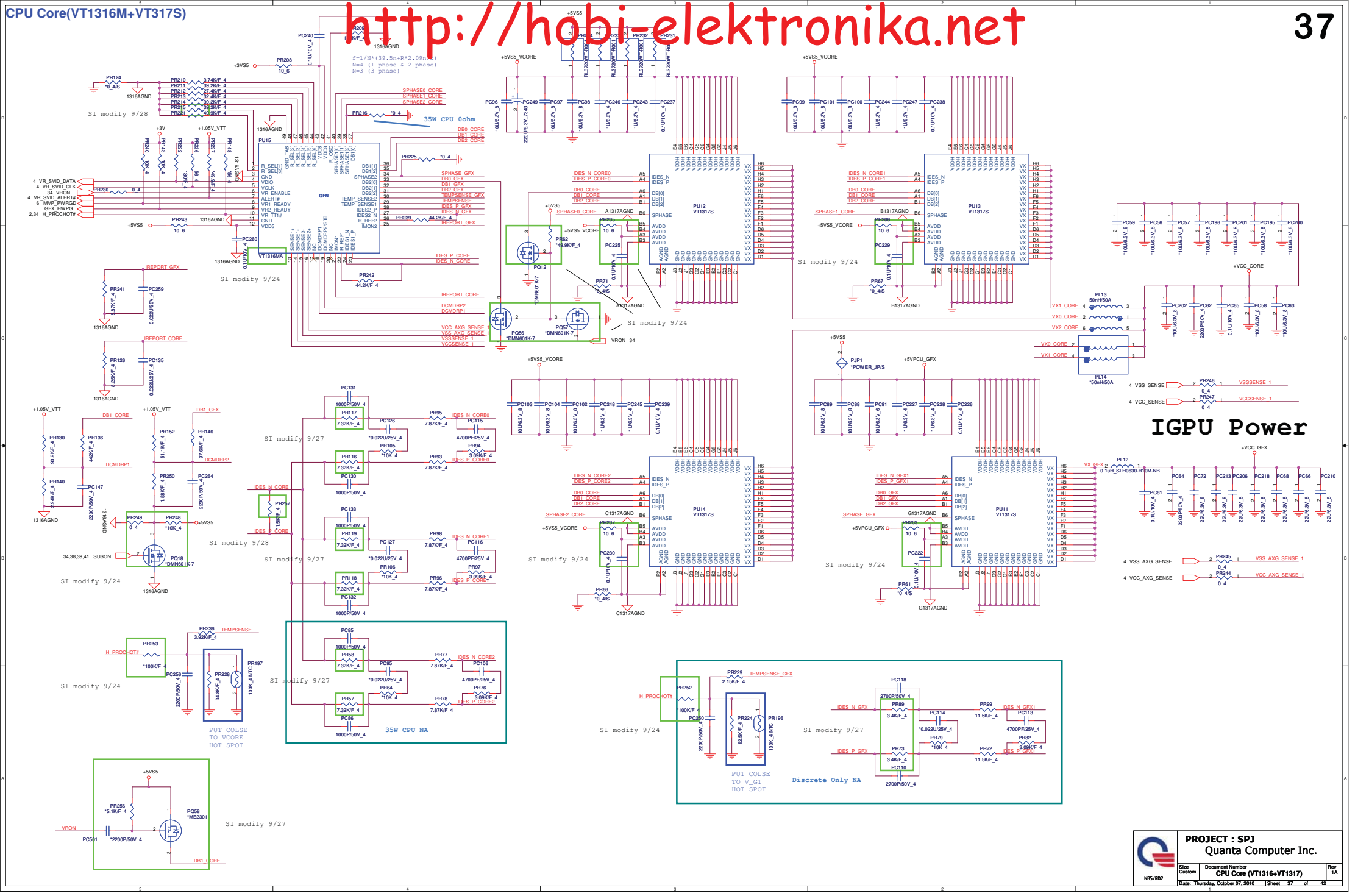

PROJECT : SPJ
Quanta Computer Inc.

Size	Document Number	Rev
Custom	CPU Core (VT1316+VT1317)	1A

Date: Thursday, October 07, 2010 Sheet 37 of 42

NB5/RD2

http://hobi-elektronika.net

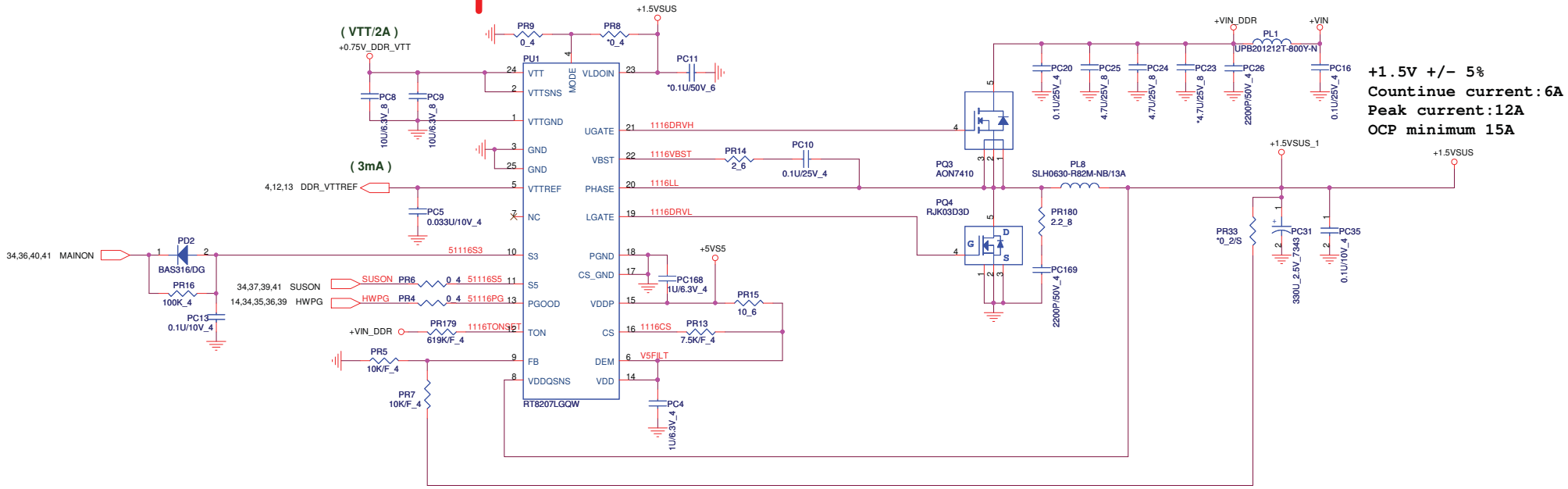

+1.5V +/- 5%
Countinue current:6A
Peak current:12A
OCP minimum 15A

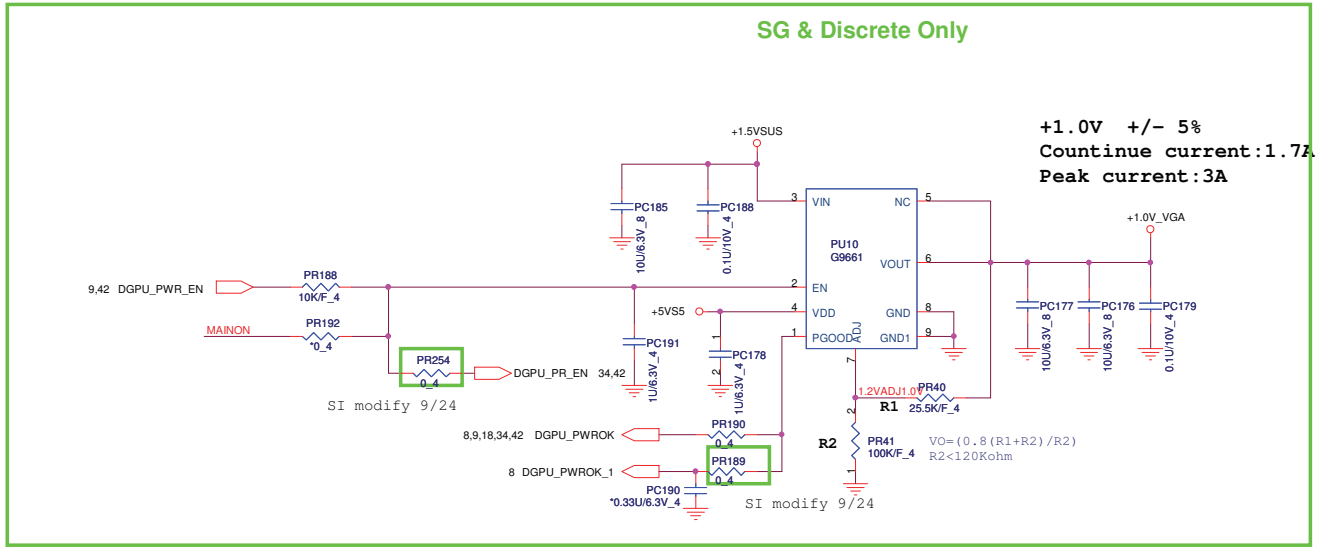

+1.0V +/- 5%
Countinue current:1.7A
Peak current:3A

NB5/RD2	PROJECT : SPJ Quanta Computer Inc.	
Size Custom	Document Number DDR3 (RT8207)	Rev 1A
Date: Thursday, October 07, 2010	Sheet 38 of 42	

http://hobi-elektronika.net

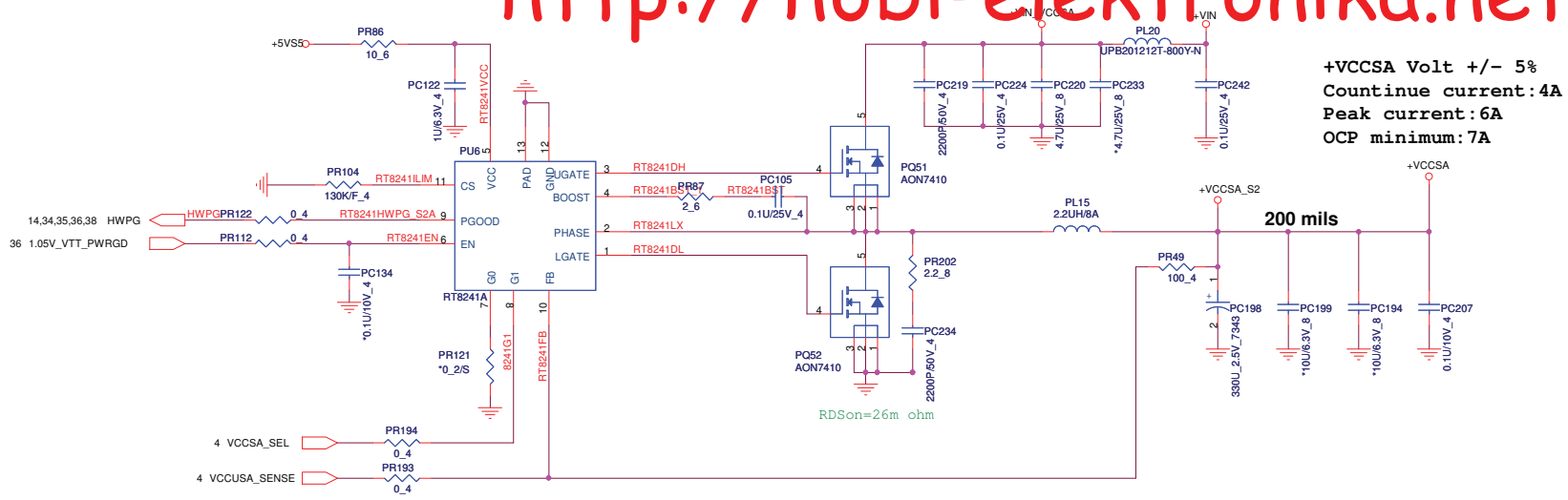

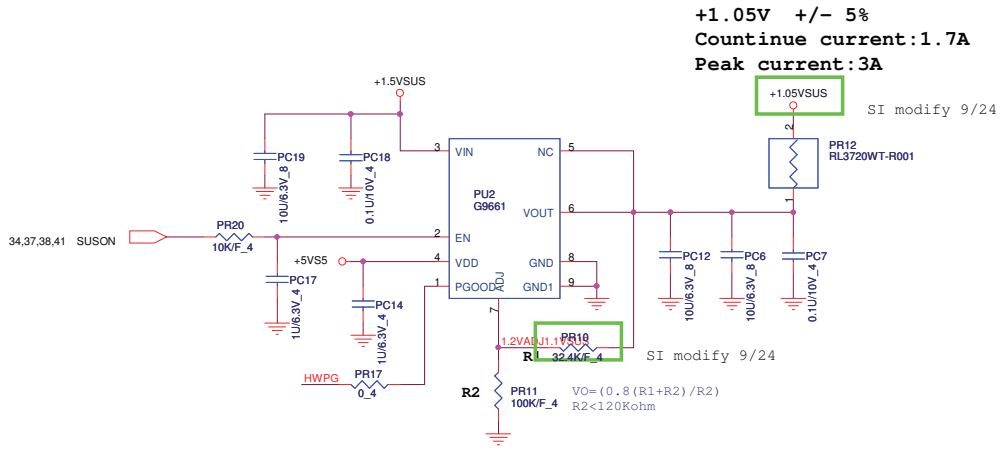

NB5/RD2	**PROJECT : SPJ** Quanta Computer Inc.	
Size Custom	Document Number VCCSA (RT8241A)	Rev 1A
Date: Thursday, October 07, 2010	Sheet 39 of 42	

http://hobi-elektronika.net

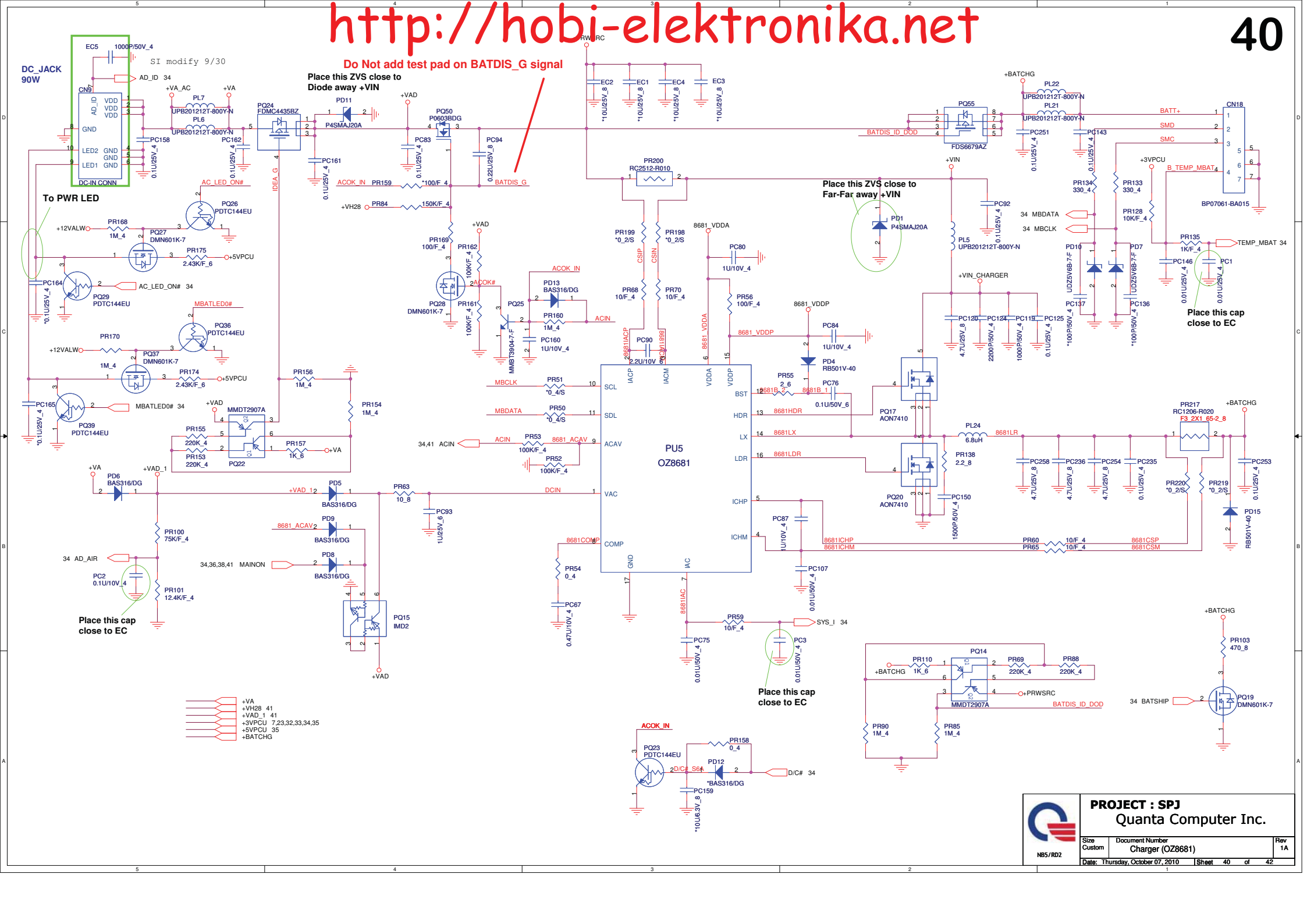

http://hobi-elektronika.net

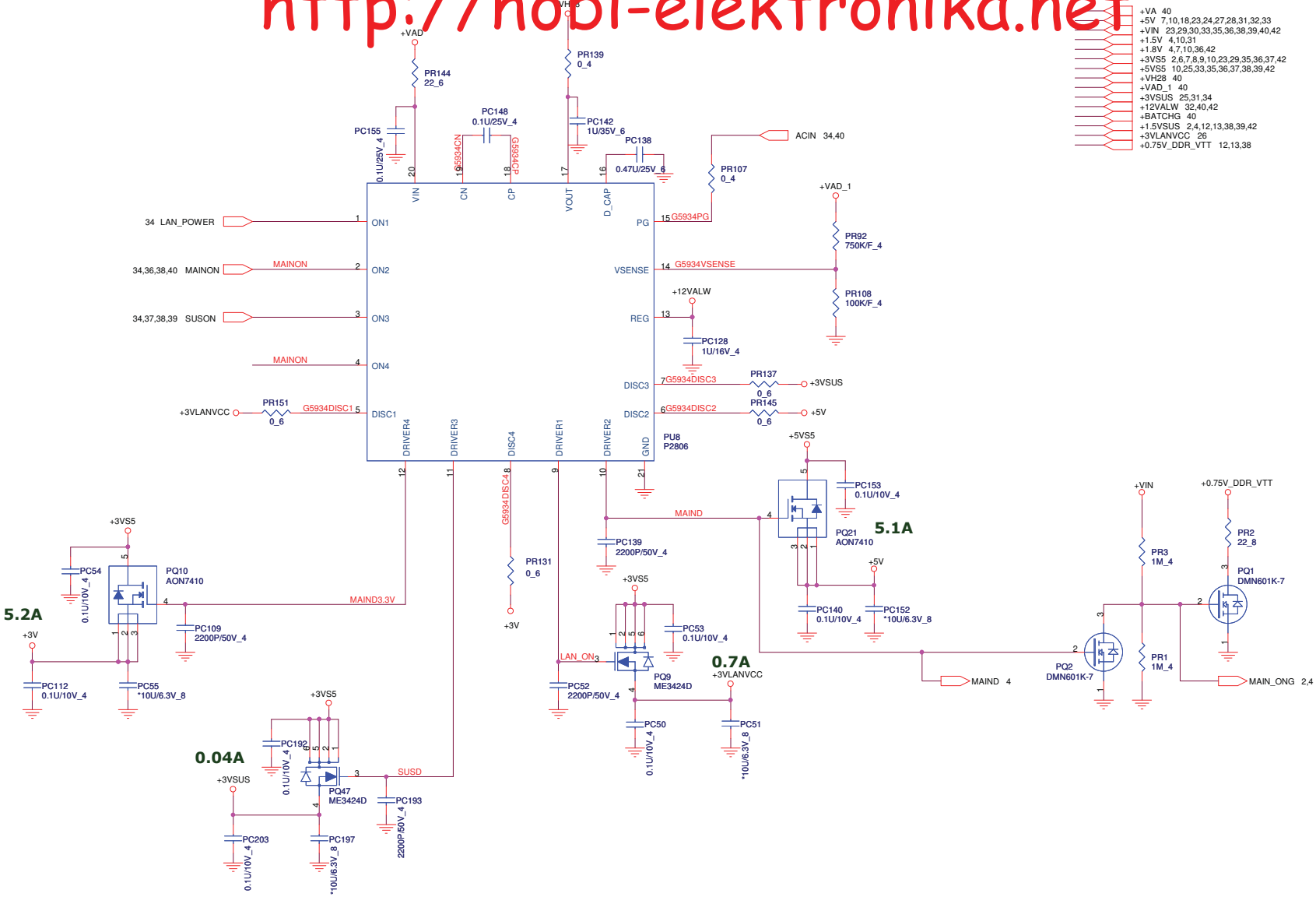

NB5/RD2	**PROJECT : SPJ** Quanta Computer Inc.	
Size Custom	Document Number Dis-charge IC (G5934)	Rev 1A
Date: Thursday, October 07, 2010	Sheet 41 of 42	

http://hobi-elektronika.net

VGA Core

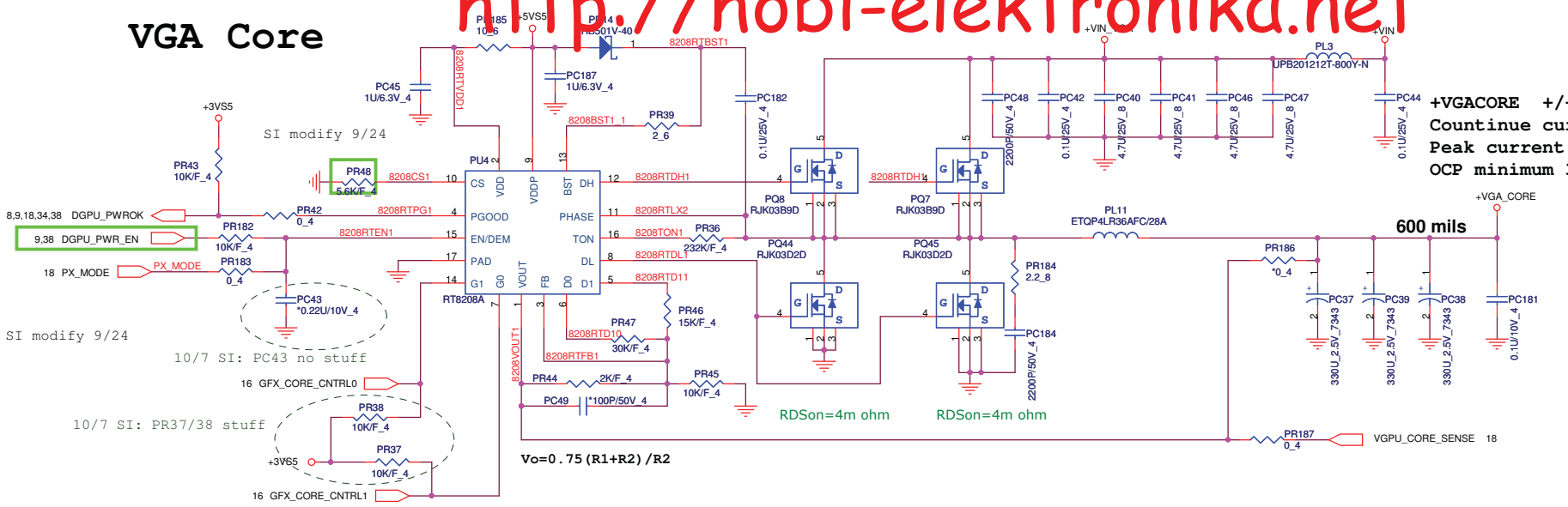

Whistler PRO G5

PWRCNTL0	PWRCNTL1	Voltage
0	0	0.9V
0	1	0.95V
1	0	1V
1	1	1.05V

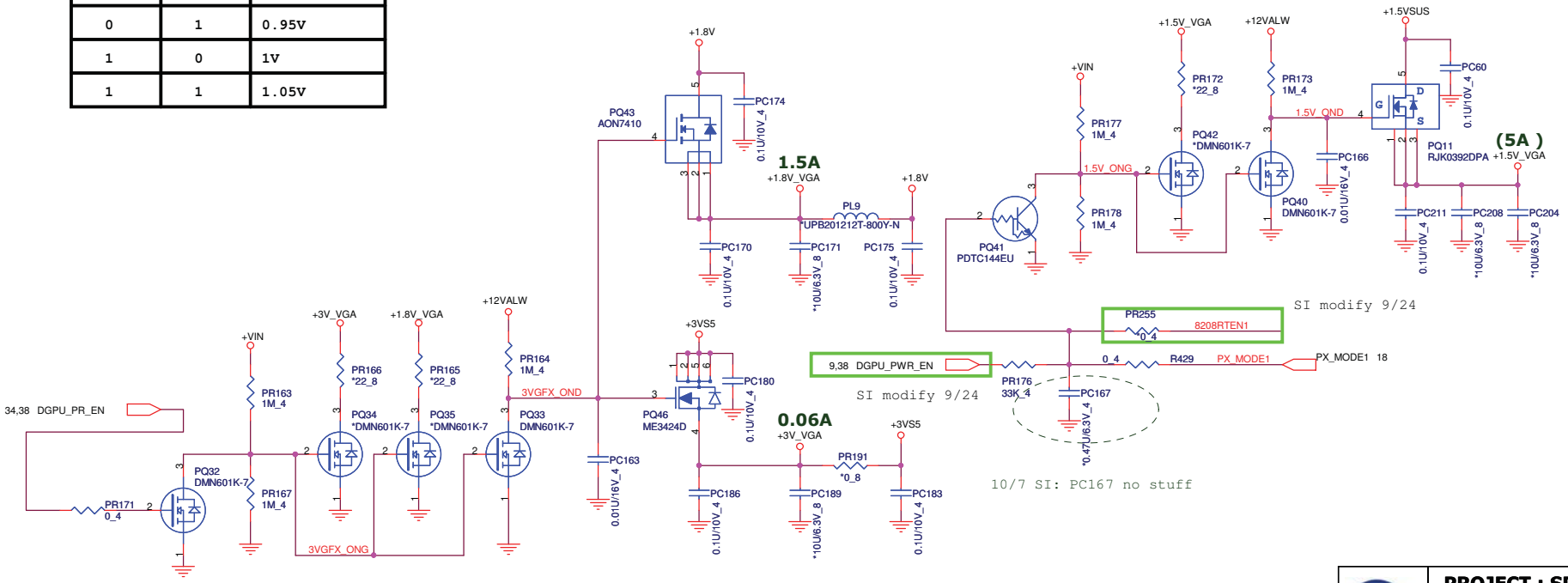

PROJECT : SPJ

Quanta Computer Inc.

Size	Document Number	Rev
Custom	+VGACORE (RT8208/1.8V)	1A

Date: Friday, October 08, 2010 Sheet 42 of 42

NB5/RD2