LLW-1/LGG-1 Schematics

Sandy Bridge

Cougar Point

2011-01-18

REV : -1

DY:None Installed
UMA:UMA platform installed only
PX:Discrete(both Robson and Whistler) SKU installed
RBS:Robson SKU installed only
WTL:Whistler SKU installed only
SAMSUNG:Use SAMSUNG VRAM
Hynix:Use Hynix VRAM
VRAM_1G:Use 1G VRAM
VRAM_2G:Use 2G VRAM

<Core Design>

緯創資通 Wistron Corporation
21F, 88, Sec.1, Hsin Tai Wu Rd., Hsichih,
Taipei Hsien 221, Taiwan, R.O.C.

Title: Cover Page		
Size: A3	Document Number: LLW-1 / LGG-1	Rev: -1
Date: Tuesday, January 18, 2011	Sheet 1 of 94	

LLW-1 / LGG-1 Block Diagram

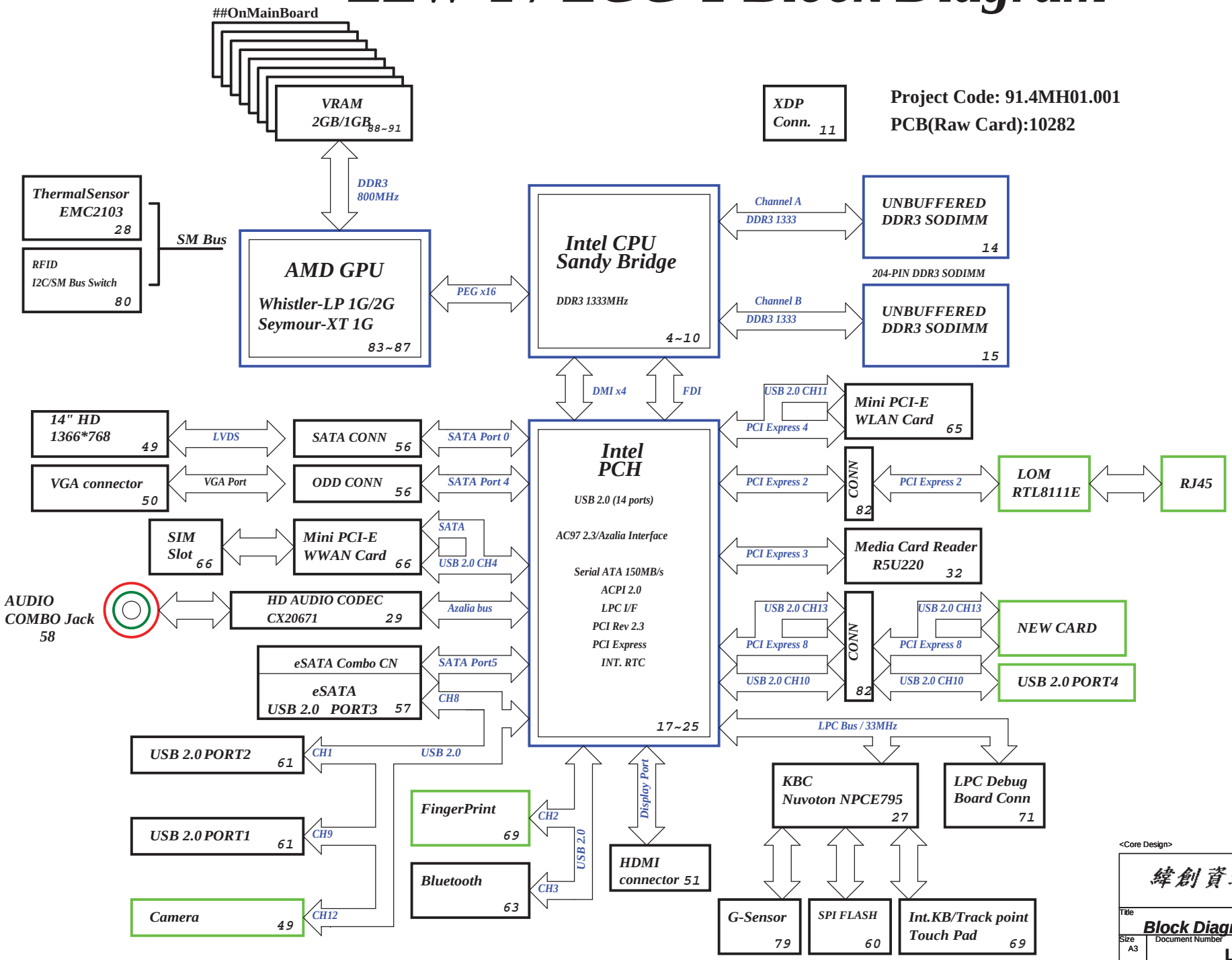

Project Code: 91.4MH01.001

PCB(Raw Card):10282

PCB Layer Stackup

L1: TOP	L5: VCC
L2: GND	L6: Signal
L3: Signal	L7: GND
L4: Signal	L8: BOTTOM

Battery Charger/Selector
BQ24745 40

INPUTS	OUTPUTS
DCBATOUT	BT+

System DC/DC
BD95280 41

PWR_3D3V_DCBATOUT	3D3V_S5
PWR_5V_DCBATOUT	5V_S5

CPU DC/DC
NCP6131 42~44

DCBATOUT	VCC_CORE
DCBATOUT_VCC_GFXCORE	VCC_GFXCORE

1D05V_VTT
TPS51218 45

PWR_1D05V_DCBATOUT	1D05V_VTT

1D5V_S3
TPS51218 46

PWR_1D5V_DCBATOUT	1D5V_S3

0D75V
RT9026 46

1D5V_S3	DDR_VREF_S3
	0D75V_S0

1D8V_S0
RT8015 47

3D3V_S5	1D8V_S0

VCCSA
RT8208B 48

PWR_VCCSA_DCBATOUT	0D85V_S0

GFX CORE
RT8208B 92

PWR_DCBATOUT_VGA_CORE	VGA_CORE

1V_VGA
RT9025 93

1D5V_S3	1V_VGA_S0

1D8V_VGA
RT9025 93

3D3V_S5	1D8V_VGA_S0

<Core Design>

緯創資通 **Wistron Corporation**
21F, 88, Sec.1, Hsin Tai Wu Rd., Hsichih,
Taipei Hsien 221, Taiwan, R.O.C.

Title: **Block Diagram**

Size	Document Number	Rev
A3	LLW-1 / LGG-1	-1

Date: Tuesday, January 18, 2011 Sheet 2 of 94

PCH Strapping

Huron River Schematic Checklist Rev.0_7

Name	Schematics Notes
SPKR	**Reboot option at power-up** **Default Mode:** Internal weak Pull-down. **No Reboot Mode with TCO Disabled:** Connect to Vcc3_3 with 8.2-kΩ - 10-kΩ weak pull-up resistor.
INIT3_3V#	Weak internal pull-up. Leave as "No Connect".
GNT3#/GPIO55 GNT2#/GPIO53 GNT1#/GPIO51	GNT[3:0]# functionality is not available on Mobile. Mobile: Used as GPIO only Pull-up resistors are not required on these signals. If pull-ups are used, they should be tied to the Vcc3_3power rail.
SPI_MOSI	**Enable Danbury:** Connect to Vcc3_3 with 8.2-k? weak pull-up resistor. **Disable Danbury:** Left floating, no pull-down required.
NV_ALE	**Enable Danbury:** Connect to +NVRAM_VCCQ with 8.2-kohm weak pull-up resistor [CRB has it pulled up with 1-kohm no-stuff resistor] **Disable Danbury:** Leave floating (internal pull-down)
NC_CLE	DMI termination voltage. Weak internal pull-up. Do not pull low.
HAD_DOCK_EN# /GPIO[33]	Low (0) - Flash Descriptor Security will be overridden. Also, when this signals is sampled on the rising edge of PWROK then it will also disable Intel ME and its features. High (1) - Security measure defined in the Flash Descriptor will be enabled. Platform design should provide appropriate pull-up or pull-down depending on the desired settings. If a jumper option is used to tie this signal to GND as required by the functional strap, the signal should be pulled low through a weak pull-down in order to avoid asserting HDA_DOCK_EN# inadvertently. Note: CRB recommends 1-kohm pull-down for FD Override. There is an internal pull-up of 20 kohm for DA_DOCK_EN# which is only enabled at boot/reset for strapping functions.
HDA_SDO	Weak internal pull-down. Do not pull high. Sampled at rising edge of RSMRST#.
HDA_SYNC	Weak internal pull-down. Do not pull high. Sampled at rising edge of RSMRST#.
GPIO15	Low (1) - Intel ME Crypto Transport Layer Security (TLS) cipher suite with no confidentiality High (1) - Intel ME Crypto Transport Layer Security (TLS) cipher suite with confidentiality Note : This is an un-muxed signal. This signal has a weak internal pull-down of 20 kohm which is enabled when PWROK is low. Sampled at rising edge of RSMRST#. CRB has a 1-kohm pull-up on this signal to +3.3VA rail.
GPIO8	GPIO8 on PCH is the Integrated Clock Enable strap and is required to be pulled-down using a 1k +/- 5% resistor. When this signal is sampled high at the rising edge of RSMRST#, Integrated Clocking is enabled, When sampled low, Buffer Through Mode is enabled.
GPIO27	**Default = Do not connect (floating)** High(1) = Enables the internal VccVRM to have a clean supply for analog rails. No need to use on-board filter circuit. Low (0) = Disables the VccVRM. Need to use on-board filter circuits for analog rails.

Processor Strapping

Huron River Schematic Checklist Rev.0_7

Pin Name	Strap Description	Configuration (Default value for each bit is 1 unless specified otherwise)	Default Value
CFG[2]	**PCI-Express Static Lane Reversal**	**1:** Normal Operation. **0:** Lane Numbers Reversed 15 -> 0, 14 -> 1, ...	1
CFG[4]		**1:** Disabled - No Physical Display Port attached to Embedded DisplayPort. **0:** Enabled - An external Display Port device is connectd to the EMBEDDED display Port	0
CFG[6:5]	**PCI-Express Port Bifurcation Straps**	11 : x16 - Device 1 functions 1 and 2 disabled 10 : x8, x8 - Device 1 function 1 enabled ; function 2 disabled 01 : Reserved - (Device 1 function 1 disabled ; function 2 enabled) 00 : x8, x4, x4 - Device 1 functions 1 and 2 enabled	11
CFG[7]	**PEG DEFER TRAINING**	**1:** PEG Train immediately following xxRESETB de assertion **0:** PEG Wait for BIOS for training	1

POWER PLANE	VOLTAGE	Voltage Rails ACTIVE IN	DESCRIPTION
5V_S0 3D3V_S0 1D8V_S0 1D5V_S0 1D05V_VTT 0D85V_S0 0D75V_S0 VCC_CORE VCC_GFXCORE 1D8V_VGA_S0 3D3V_VGA_S0 1V_VGA_S0	5V 3.3V 1.8V 1.5V 1.05V 0.95 - 0.85V 0.75V 0.35V to 1.5V 0.4 to 1.25V 1.8V 3.3V 1V	S0	CPU Core Rail Graphics Core Rail
5V_USBX_S3 1D5V_S3 DDR_VREF_S3	5V 1.5V 0.75V	S3	
BT+ DCBATOUT 5V_S5 5V_AUX_S5 3D3V_S5 3D3V_AUX_S5	6V-14.1V 6V-14.1V 5V 5V 3.3V 3.3V	All S states	AC Brick Mode only
3D3V_LAN_S5	3.3V	WOL_EN	Legacy WOL
3D3V_AUX_KBC	3.3V	DSW, Sx	ON for supporting Deep Sleep states
3D3V_AUX_S5	3.3V	G3, Sx	Powered by Li Coin Cell in G3 and +V3ALW in Sx

USB Table

Pair	Device
0	X
1	USB2
2	FINGERPRINT
3	BLUETOOTH
4	Mini Card2 (WWAN)
5	X
6	X
7	X
8	ESATA1
9	USB1
10	USB Ext. port 4
11	Mini Card1 (WLAN)
12	CAMERA
13	New Card

PCIE Routing

LANE1	RESERVED
LANE2	LAN
LANE3	CARD READER
LANE4	MiniCard WLAN
LANE5	RESERVED
LANE6	RESERVED
LANE7	RESERVED
LANE8	NEW CARD

SATA Table

SATA	
Pair	Device
0	HDD
1	mSATA
2	N/A
3	N/A
4	ODD
5	ESATA

SMBus ADDRESSES

I² C / SMBus Addresses Device	Ref Des	HURON RIVER ORB Address Hex Bus
EC SMBus 1 Battery Capacity Board		KBC_SDA1/KBC_SCL1 KBC_SDA1/KBC_SCL1
EC SMBus 2 PCH MXM LCD Thermal Sensor		KBC_SDA2/KBC_SCL2 KBC_SDA2/KBC_SCL2 KBC_SDA2/KBC_SCL2 KBC_SDA2/KBC_SCL2
PCH SMBus CK505 Clock Generator SO-DIMMA (SPD) SO-DIMMB (SPD) Digital Pot		PCH_SMBDATA/PCH_SMBCLK PCH_SMBDATA/PCH_SMBCLK PCH_SMBDATA/PCH_SMBCLK PCH_SMBDATA/PCH_SMBCLK

<Core Design>

緯創資通 Wistron Corporation
21F, 88, Sec.1, Hsin Tai Wu Rd., Hsichih,
Taipei Hsien 221, Taiwan, R.O.C.

Title: Table of Content

Size	Document Number	Rev
A3	LLW-1 / LGG-1	-1

SSID = CPU

Signal Routing Guideline:
PEG_ICOMPO keep W/S=12/15 mils and routing length less than 500 mils.
PEG_ICOMPI & PEG_RCOMPO keep W/S=4/15 mils and routing length less than 500 mils.

Note:
Intel DMI supports both Lane Reversal and polarity inversion but only at PCH side. This is enabled via a soft strap.

Note:
Intel FDI supports both Lane Reversal and polarity inversion but only at PCH side. This is enabled via a soft strap.

Note:
Lane reversal does not apply to FDI sideband signals.

Signal Routing Guideline:
EDP_ICOMPO keep W/S=12/15 mils and routing length less than 500 mils.
EDP_COMPIO keep W/S=4/15 mils and routing length less than 500 mils.

NOTE.
Processor strap CFG[4] should be pulled low to enable Embedded DisplayPort.

NOTE.
If PEG is not implemented, the RX&TX pairs can be left as No Connect

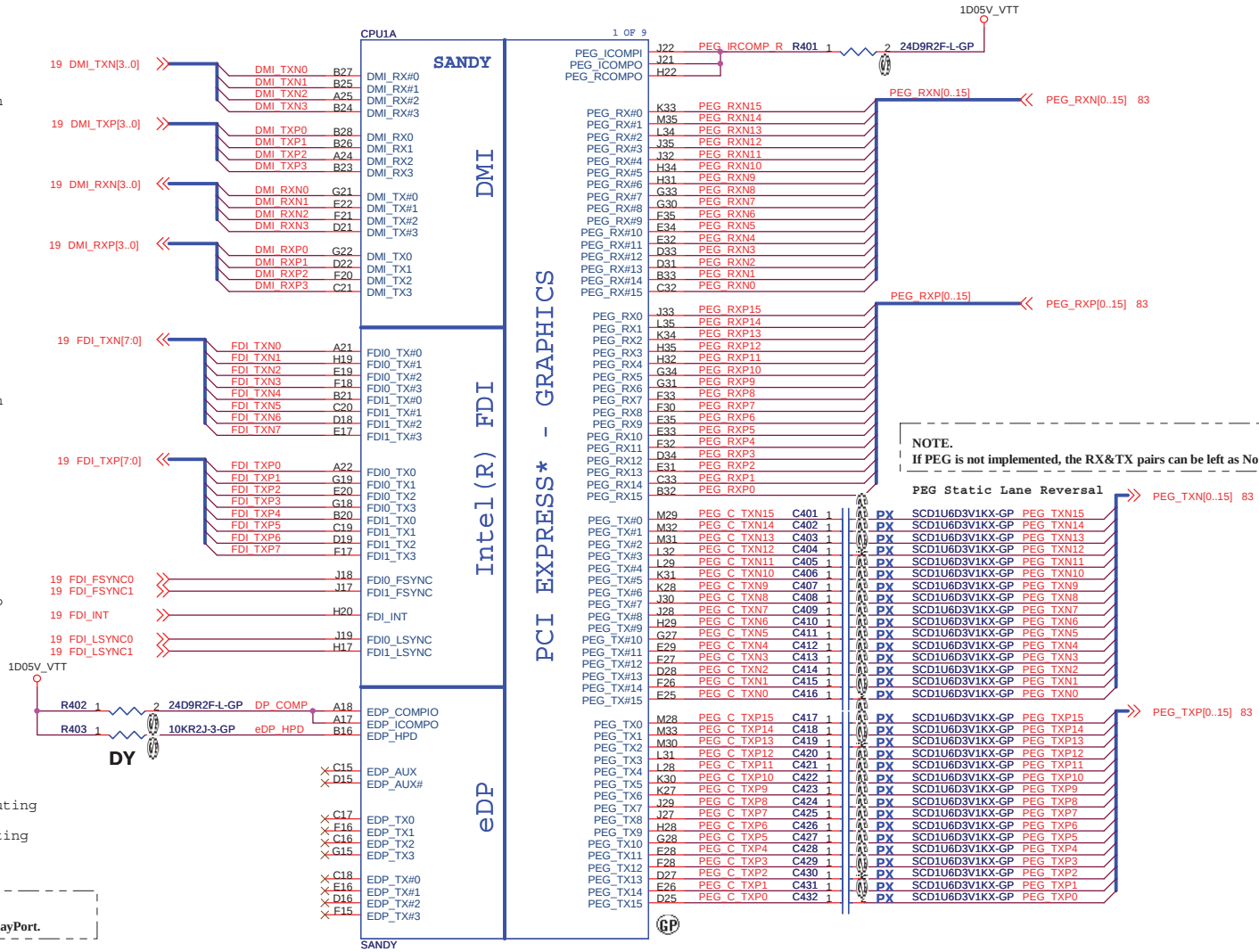

Table 4.1- Central Processing Unit slot multi-source

Supplier	Description	Lenovo P/N	Wistron P/N
FOXCONN	PZ98827-364B-41F	N/A	62.10055.421
TYCO	2-2013620-3	N/A	62.10040.771

<Core Design>

緯創資通 Wistron Corporation
21F, 88, Sec.1, Hsin Tai Wu Rd., Hsichih,
Taipei Hsien 221, Taiwan, R.O.C.

Title: CPU (PCIE/DMI/FDI)
Size: A3 | Document Number: LLW-1 / LGG-1 | Rev: -1
Date: Tuesday, January 18, 2011 | Sheet 4 of 94

SSID = CPU

Disabling Guidelines:
If motherboard only supports external graphics:
Connect DPLL_REF_SSCLK on Processor to GND through 1K +/- 5% resistor.
Connect DPLL_REF_SSCLK# on Processor to VCCP through 1K +/- 5% resistorpower (~15 mW) may be wasted.

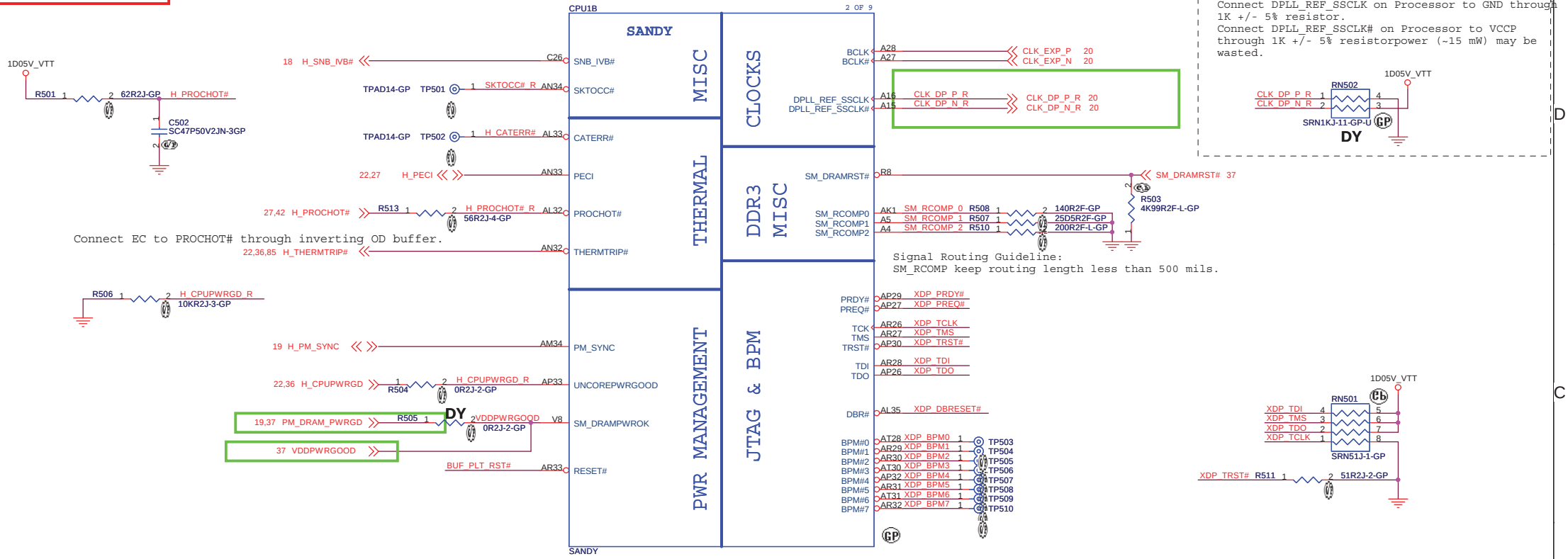

Table 5.1- N-Channel MOSFET multi-source

Supplier	Description	Lenovo P/N	Wistron P/N
PANJIT	2N7002K	N/A	84.2N702.J31
DIODES	2N7002K	N/A	84.2N702.031
NXP	2N7002BK	N/A	84.07002.I31

<Core Design>

緯創資通 Wistron Corporation
21F, 88, Sec.1, Hsin Tai Wu Rd., Hsichih,
Taipei Hsien 221, Taiwan, R.O.C.

Title: CPU (Thermal/CLK/PM)

Size: A3 | Document Number: LLW-1 / LGG-1 | Rev: -1

Date: Tuesday, January 18, 2011 | Sheet 5 of 94

SSID = CPU

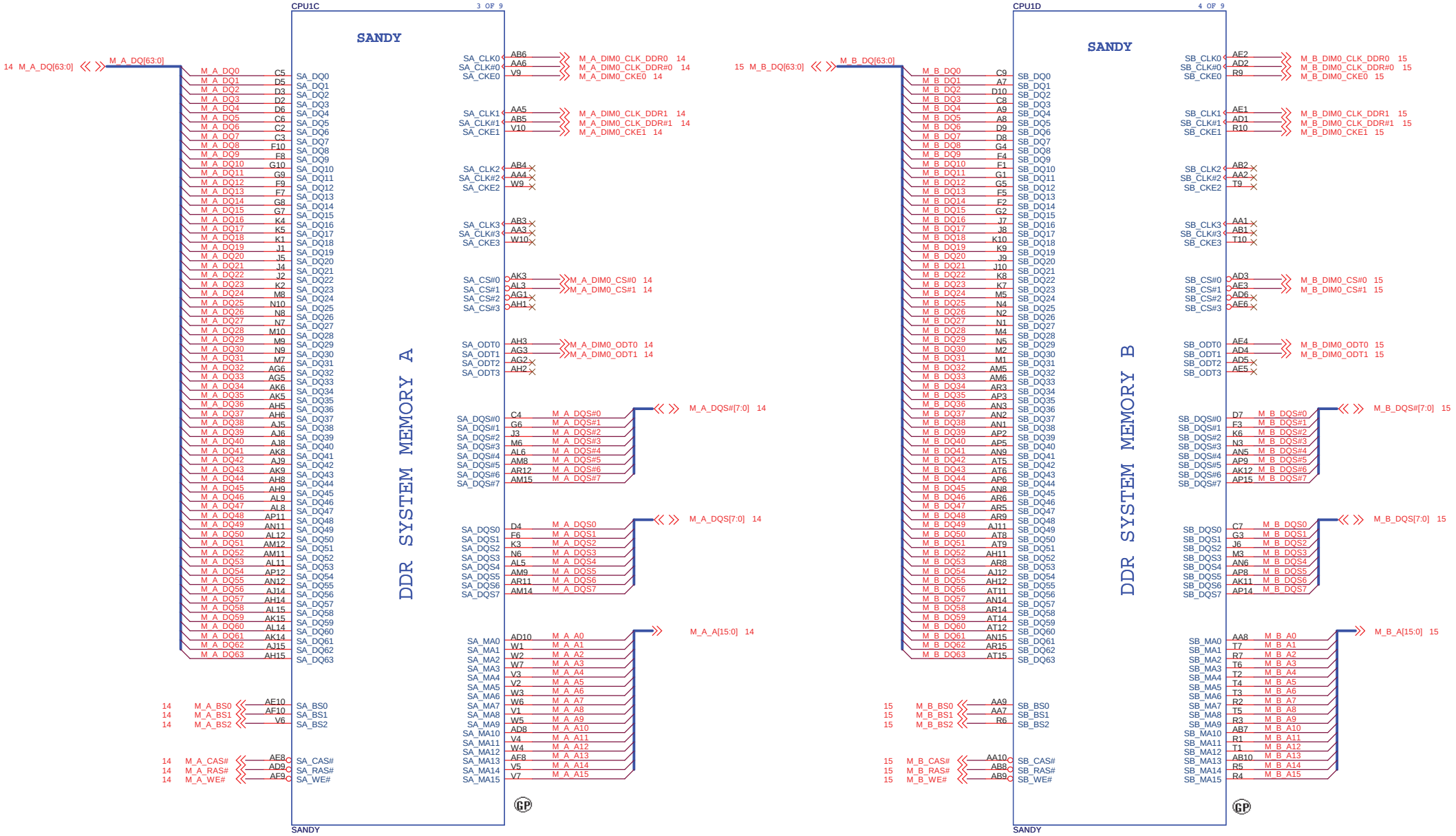

<Core Design>

緯創資通 **Wistron Corporation**
21F, 88, Sec.1, Hsin Tai Wu Rd., Hsichih,
Taipei Hsien 221, Taiwan, R.O.C.

Title	CPU (DDR)	
Size A3	Document Number LLW-1 / LGG-1	Rev -1
Date: Tuesday, January 18, 2011	Sheet 6 of 94	

SSID = CPU

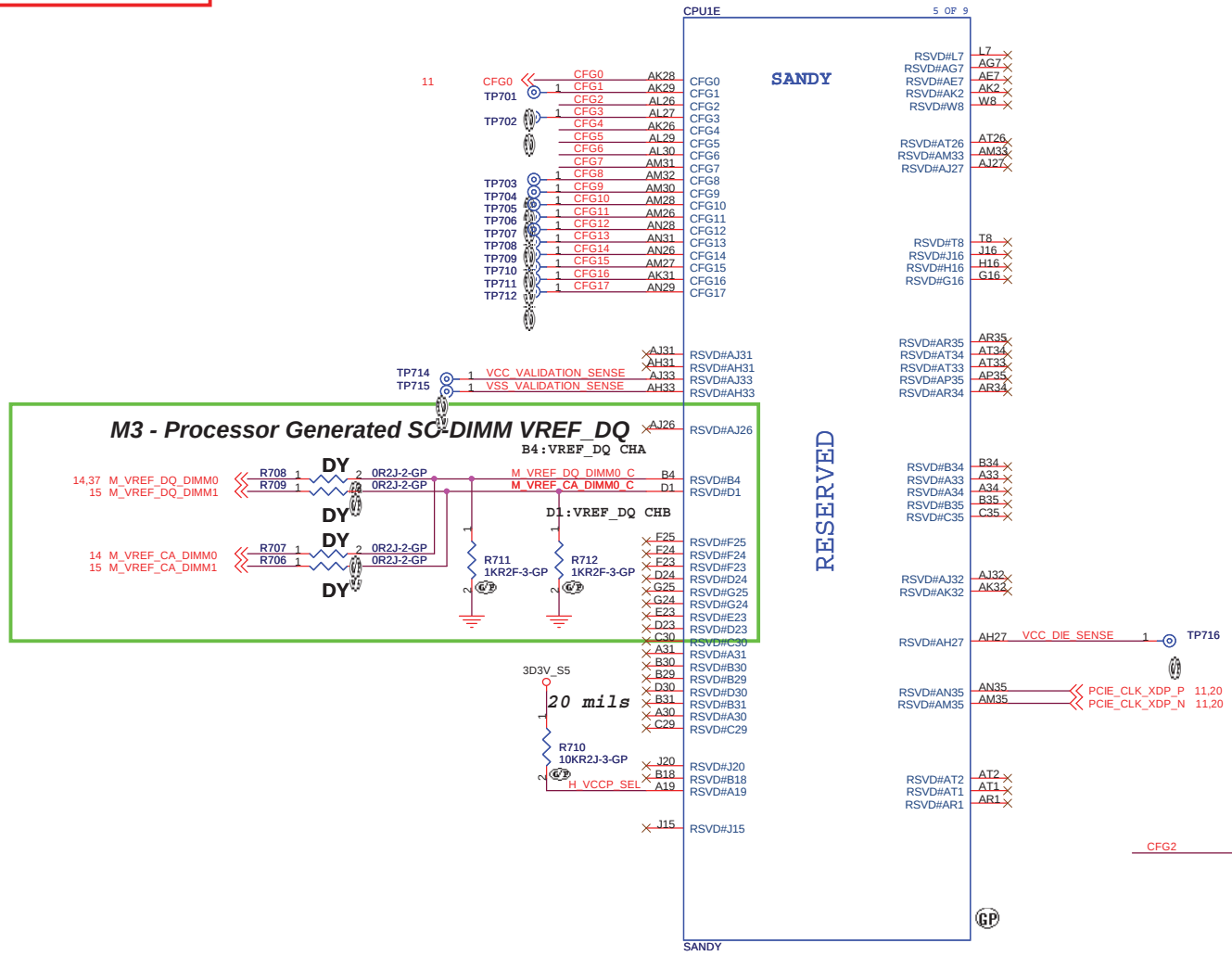

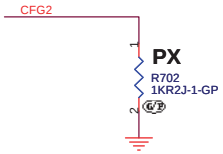

PEG Static Lane Reversal	
CFG2	1: Normal Operation; Lane # definition matches socket pin map definition
	0:Lane Reversed

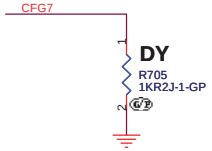

PEG DEFER TRAINING	
CFG7	1: PEG Train immediately following xxRESETB de assertion
	0: PEG Wait for BIOS for training

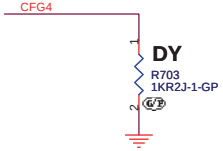

Display Port Presence Strap	
CFG4	1: Disabled; No Physical Display Port attached to Embedded Display Port
	0: Enabled; An external Display Port device is connected to the Embedded Display Port

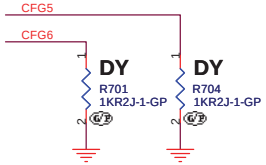

PCIE Port Bifurcation Straps	
CFG[6:5]	11: x16 - Device 1 functions 1 and 2 disabled
	10: x8, x8 - Device 1 function 1 enabled ; function 2 disabled 01: Reserved - (Device 1 function 1 disabled ; function 2 enabled) 00: x8,x4,x4 - Device 1 functions 1 and 2 enabled

<Core Design>

緯創資通 Wistron Corporation
21F, 88, Sec.1, Hsin Tai Wu Rd., Hsichih,
Taipei Hsien 221, Taiwan, R.O.C.

Title: CPU (RESERVED)

Size: A3 | Document Number: LLW-1 / LGG-1 | Rev: -1

Date: Tuesday, January 18, 2011 | Sheet 7 of 94

SSID = CPU

POWER

PROCESSOR CORE POWER

53A

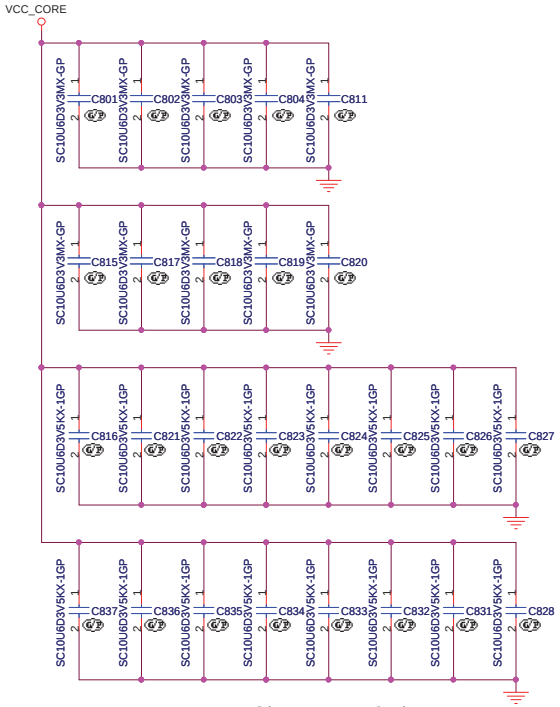

VCC Output Decoupling Recommendation:
4 x 470 uF at Bottom Socket Edge
8 x 22 uF at Top Socket Cavity
8 x 22 uF at Top Socket Edge
8 x 22 uF at Bottom Socket Cavity

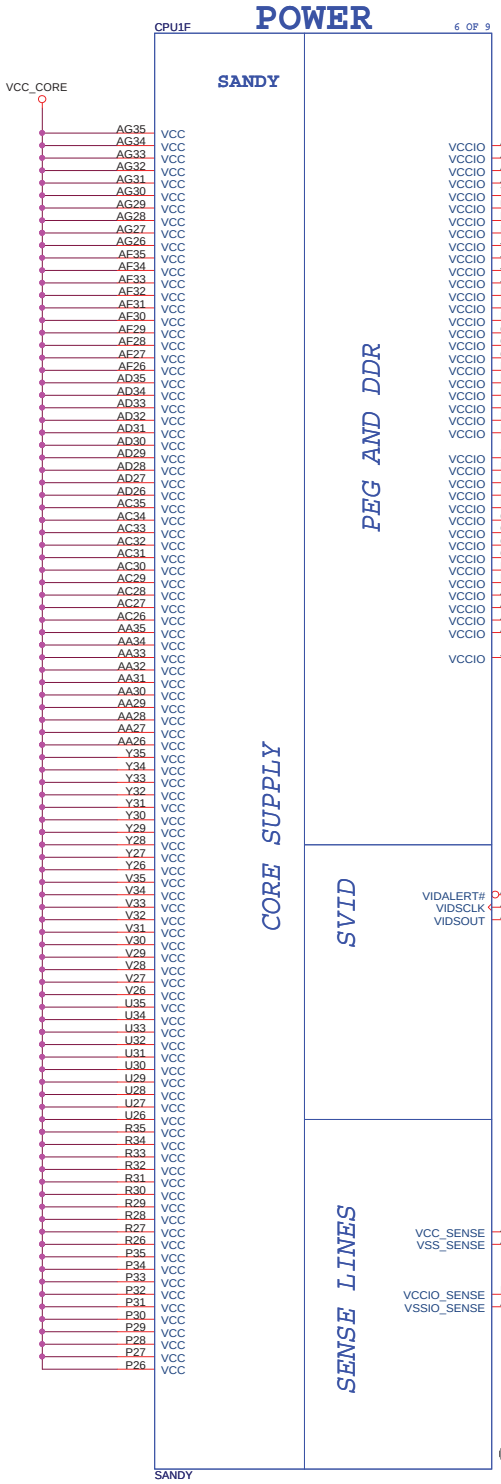

VCCIO Output Decoupling Recommendation:
2 x 330 uF (3 x 330 uF for 2012 capable designs)
5 x 22 uF & 5 x 0805 no-stuff at Bottom
7 x 22 uF & 2 x 0805 no-stuff at Top

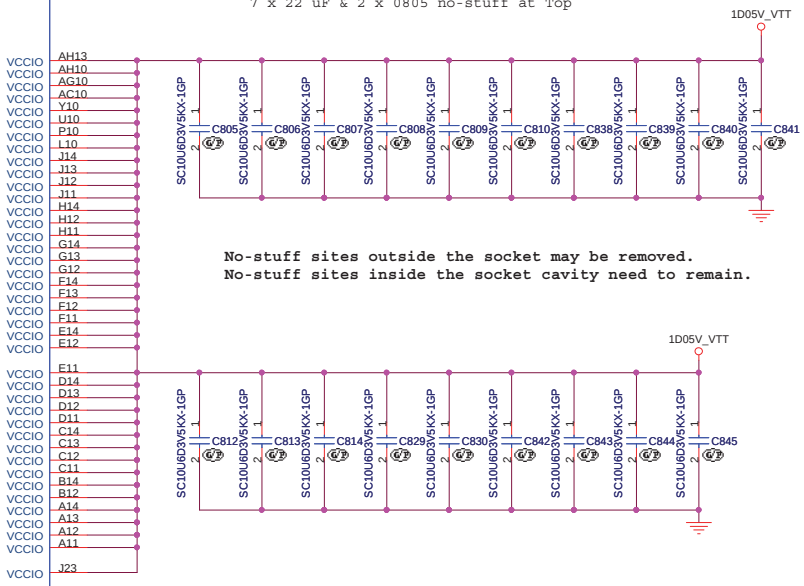

No-stuff sites outside the socket may be removed.
No-stuff sites inside the socket cavity need to remain.

For CRB VIDSOUT need to pull high 130 ohm closr to CPU and IMVP7
For CRB VIDALERT# need to pull high 75 ohm close to CPU

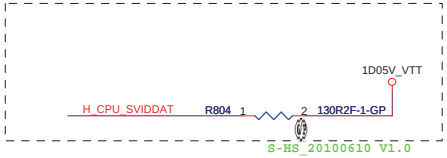

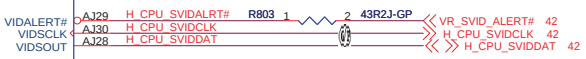

R801, R802 need to close to CPU

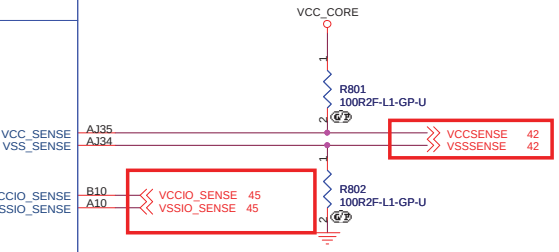

<Core Design>

緯創資通 Wistron Corporation
21F, 88, Sec.1, Hsin Tai Wu Rd., Hsichih,
Taipei Hsien 221, Taiwan, R.O.C.

Title: CPU (VCC_CORE)

Size	Document Number	Rev
Custom	LLW-1 / LGG-1	-1

Date: Tuesday, January 18, 2011 Sheet 8 of 94

SSID = CPU

VAXG Output Decoupling Recommendation:
2 x 470 uF at Bottom Socket Edge
2 x 22 uF at Top Socket Cavity
4 x 22 uF at Top Socket Edge
2 x 22 uF at Bottom Socket Cavity
4 x 22 uF at Bottom Socket Edge

R906,R907 close to CPU

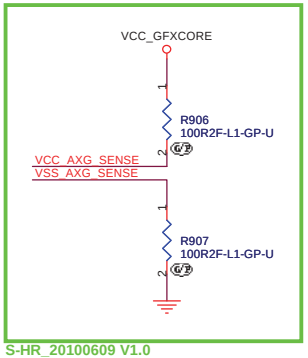

S-HR_20100609 V1.0

POWER

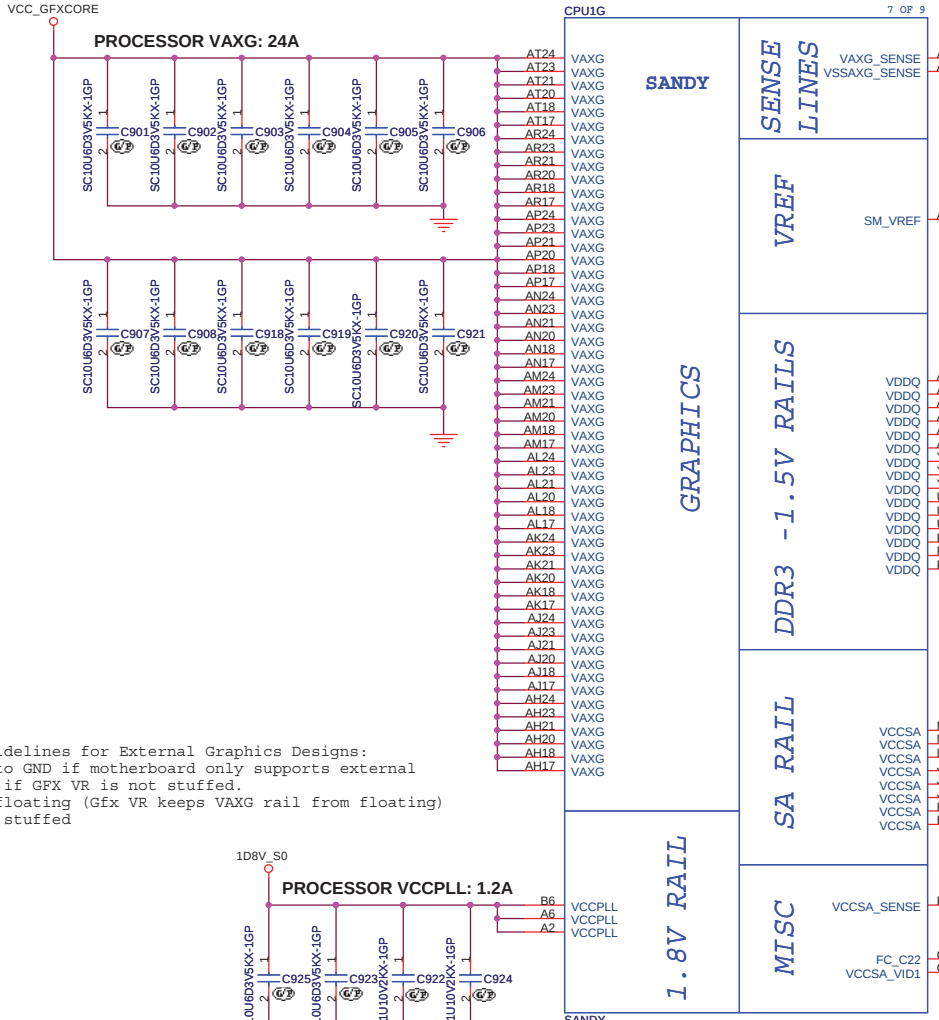

Refer to the latest Huron River Mainstream PDG (Doc# 436735) for more details on S3 power reduction implementation.

+V_SM_VREF_CNT should have 10 mil trace width

Routing Guideline:
Power from DDR_VREF_S3 and +V_SM_VREF_CNT should have 10 mils trace width.

VDDQ Output Decoupling Recommendation:
1 x 330 uF
6 x 10 uF

VCCSA Output Decoupling Recommendation:
1 x 330 uF
2 x 10 uF at Bottom Socket Cavity
1 x 10 uF at Bottom Socket Edge

R902 need be close to pin H23.

Disabling Guidelines for External Graphics Designs:
Can connect to GND if motherboard only supports external graphics and if GFX VR is not stuffed.
Can be left floating (Gfx VR keeps VAXG rail from floating) if the VR is stuffed

VCCPLL Output Decoupling Recommendation:
1 x 330 uF
2 x 1 uF
1 x 10 uF

<Core Design>

緯創資通 Wistron Corporation
21F, 88, Sec.1, Hsin Tai Wu Rd., Hsichih,
Taipei Hsien 221, Taiwan, R.O.C.

Title: CPU (VCC_GFXCORE)

Size: A3 | Document Number: LLW-1 / LGG-1 | Rev: -1

Date: Tuesday, January 18, 2011 | Sheet 9 of 94

SSID = CPU

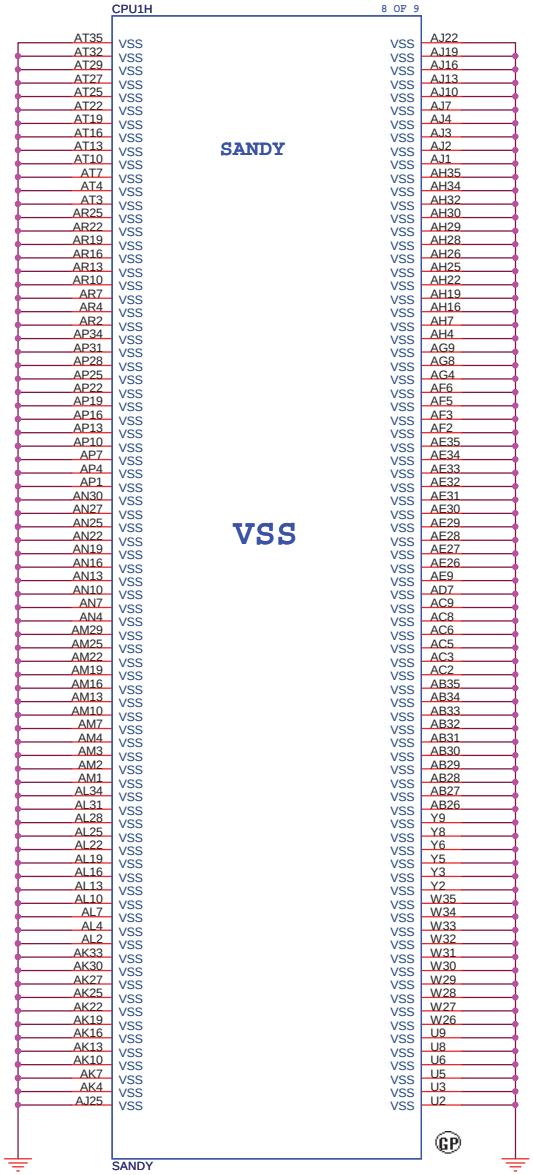

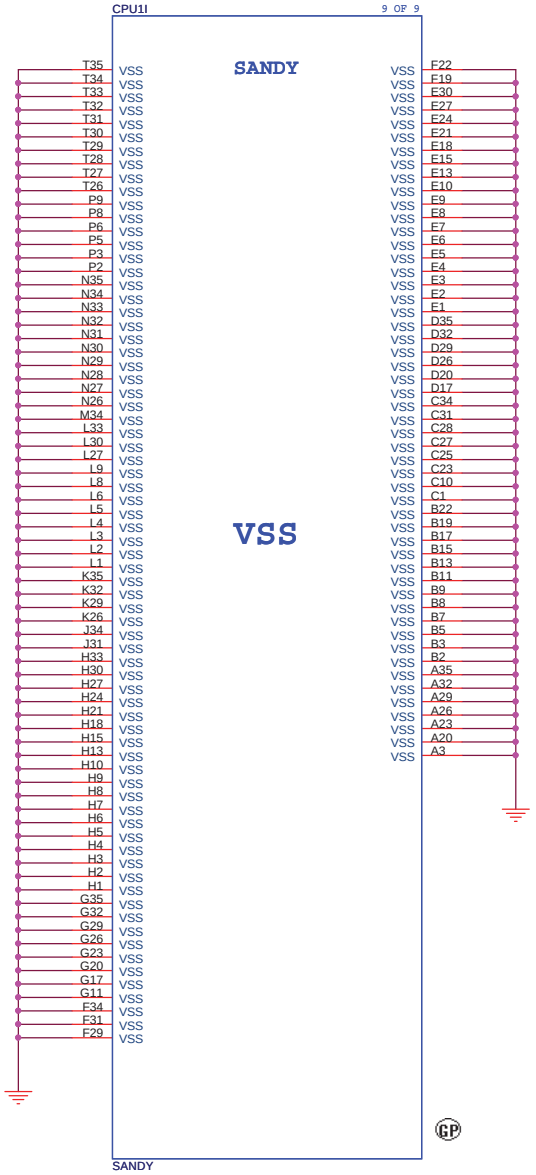

<Core Design>

緯創資通 **Wistron Corporation**
21F, 88, Sec.1, Hsin Tai Wu Rd., Hsichih,
Taipei Hsien 221, Taiwan, R.O.C.

Title	CPU (VSS)	
Size A3	Document Number LLW-1 / LGG-1	Rev -1
Date: Tuesday, January 18, 2011	Sheet 10 of 94	

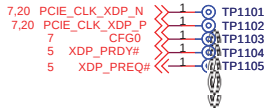

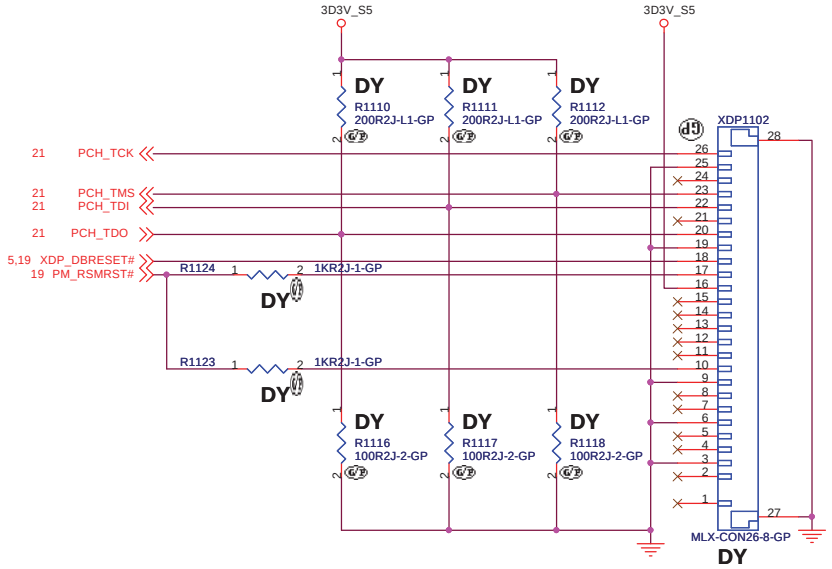

DEBUG Interface for Processor.

CPU XDP SFF 26pin IF
Pin 1 OBSFN_A0 (PREQ#, I/O)
Pin 2 OBSFN_A1 (PRDY#, I/O)
Pin 3 GND
Pin 4 OBSDATA_A0 (Open, I/O)
Pin 5 OBSDATA_A1 (Open, I/O)
Pin 6 GND
Pin 7 OBSDATA_A2 (Open, I/O)
Pin 8 OBSDATA_A3 (Open, I/O)
Pin 9 GND
Pin 10 HOOK0 (PWRGD, In)
Pin 11 HOOK1 (BP_PWRGD_RST#, Out)
Pin 12 HOOK2 (CFG0, Out)
Pin 13 HOOK3 (vr_READYSYS_PWROK,Out)
Pin 14 HOOK4 (BCLK, In)
Pin 15 HOOK5 (BCLK#, In)
Pin 16 VCCOBS_AB (VCCP Voltage of CPU, In)
Pin 17 HOOK6 (RESET#, Out)
Pin 18 HOOK7 (DBR#, Out)
Pin 19 GND
Pin 20 TDO, In
Pin 21 TRST#, Out
Pin 22 TDI, Out
Pin 23 TMS, Out
Pin 24 TCK1 (Open)
Pin 25 GND
Pin 26 TCK0 ,Out

TABLE

PCH PIN	REF DES	PCH ES1 JTAG		PCH ES2 JTAG		PRODUCTION	
		Enable	Disable	Enable	Disable	Enable	Disable
TDO	R1110	DY	DY	200 Ohms	DY	DY	DY
	R1116	DY	DY	100 Ohms	DY	DY	DY
	R2	DY	DY	DY	DY	51 Ohms	DY
TMS	R1112	200 Ohms	DY	200 Ohms	DY	DY	DY
	R1118	100 Ohms	DY	100 Ohms	DY	DY	DY
	R91	DY	DY	DY	DY	51 Ohms	DY
TDI	R1111	200 Ohms	20K Ohms	200 Ohms	DY	DY	DY
	R1117	100 Ohms	10K Ohms	100 Ohms	DY	DY	DY
	R90	DY	DY	DY	DY	51 Ohms	DY
TCK	R541	51 Ohms	51 Ohms	51 Ohms	51 Ohms	51 Ohms	51 Ohms
TRST#	R953	20K Ohms	DY	DY	DY	DY	DY
	R535	10K Ohms	DY	DY	DY	DY	DY
	R103	DY	DY	DY	DY	DY	DY

LOGIC

DEBUG Interface for PCH.

PCH XDP SFF 26pin IF
Pin 1 OBSFN_A0 (Open), I/O)
Pin 2 OBSFN_A1 (Open, I/O)
Pin 3 GND
Pin 4 OBSDATA_A0 (Open, I/O)
Pin 5 OBSDATA_A1 (Open, I/O)
Pin 6 GND
Pin 7 OBSDATA_A2 (Open, I/O)
Pin 8 OBSDATA_A3 (Open, I/O)
Pin 9 GND
Pin 10 HOOK0 (RSMRST#, In)
Pin 11 HOOK1 (BP_PWRGD_RST#, Out)
Pin 12 HOOK2 (Open)
Pin 13 HOOK3 (Open)
Pin 14 HOOK4 (Open)
Pin 15 HOOK5 (Open)
Pin 16 VCCOBS_AB (3.3VSUS, In)
Pin 17 HOOK6 (RSMRST#, Out)
Pin 18 HOOK7 (DBR#, Out)
Pin 19 GND
Pin 20 TDO (JTAG, In)
Pin 21 TRST# (Open)
Pin 22 TDI (JTAG, Out)
Pin 23 TMS (JTAG, Out)
Pin 24 TCK1 (Open)
Pin 25 GND
Pin 26 TCK0 (JTAG, Out)

<Core Design>

緯創資通 Wistron Corporation
21F, 88, Sec.1, Hsin Tai Wu Rd., Hsichih,
Taipei Hsien 221, Taiwan, R.O.C.

Title: XDP CONN

Size: A3 | Document Number: LLW-1 / LGG-1 | Rev: -1

Date: Tuesday, January 18, 2011 | Sheet 11 of 94

BLANK

<Core Design>

緯創資通 Wistron Corporation
21F, 88, Sec.1, Hsin Tai Wu Rd., Hsichih,
Taipei Hsien 221, Taiwan, R.O.C.

Title

Reserved

Size	Document Number	Rev
A4	LLW-1 / LGG-1	-1

Date: Tuesday, January 18, 2011 Sheet 12 of 94

BLANK

<Core Design>

緯創資通 Wistron Corporation
21F, 88, Sec.1, Hsin Tai Wu Rd., Hsichih,
Taipei Hsien 221, Taiwan, R.O.C.

Title

CLOCK GEN

Size	Document Number	Rev
A4	LLW-1 / LGG-1	-1

Date: Tuesday, January 18, 2011 Sheet 13 of 94

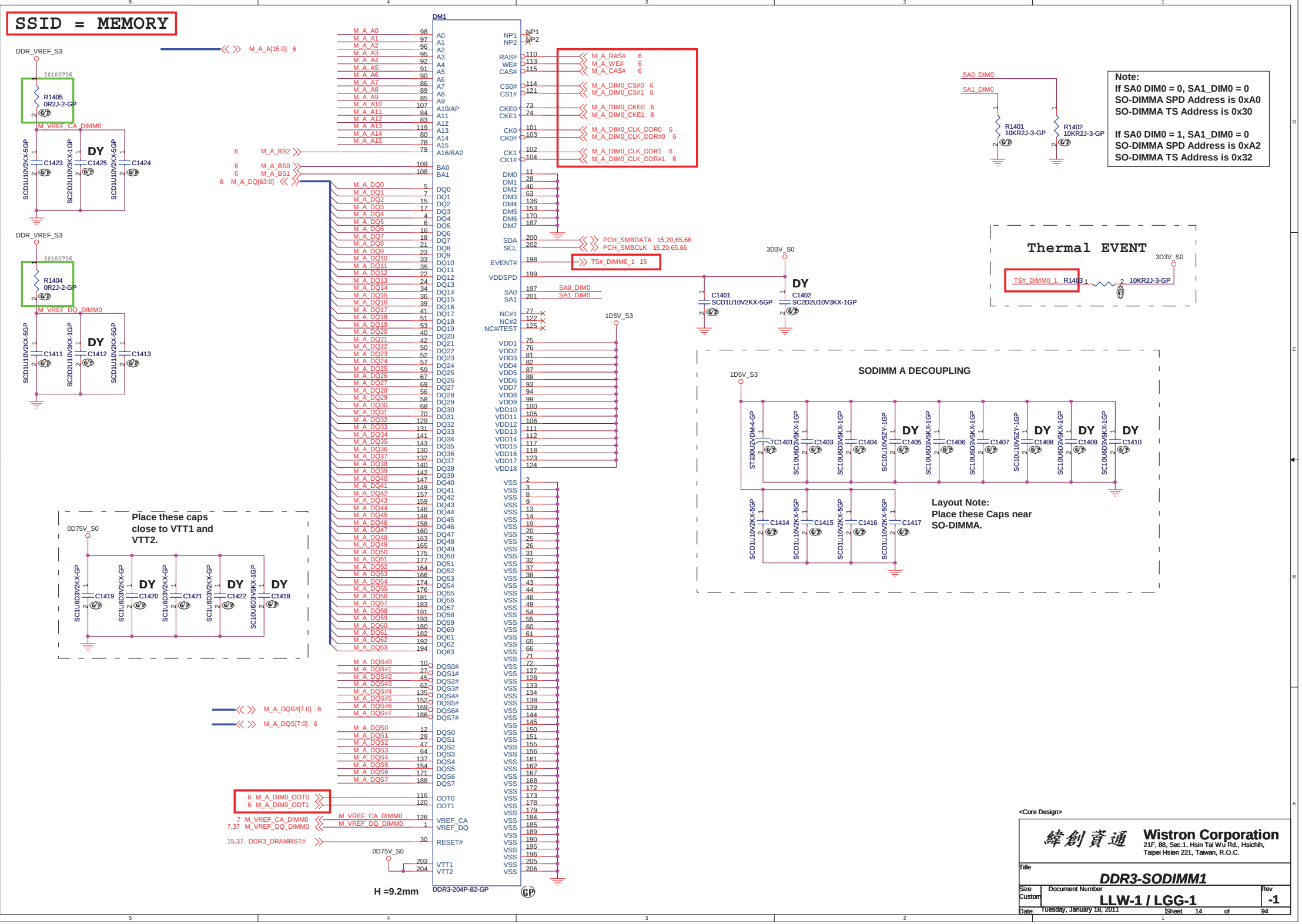
SSID = MEMORY
DDR_VREF_S3
R1405 0R2J-2-GP
M_VREF_CA_DIMM0
C1423 SCD1U10V2KX-5GP
C1425 SC2D2U10V3KX-1GP DY
C1424 SCD1U10V2KX-5GP
DDR_VREF_S3
R1404 0R2J-2-GP
M_VREF_DQ_DIMM0
C1411 SCD1U10V2KX-5GP
C1412 SC2D2U10V3KX-1GP DY
C1413 SCD1U10V2KX-5GP
M_A_A[15:0] 6
M_A_BS2 6
M_A_BS0 6
M_A_BS1 6
M_A_DQ[63:0] 6
DM1
DDR3-204P-82-GP
M_A_RAS# 6
M_A_WE# 6
M_A_CAS# 6
M_A_DIM0_CS#0 6
M_A_DIM0_CS#1 6
M_A_DIM0_CKE0 6
M_A_DIM0_CKE1 6
M_A_DIM0_CLK_DDR0 6
M_A_DIM0_CLK_DDR#0 6
M_A_DIM0_CLK_DDR1 6
M_A_DIM0_CLK_DDR#1 6
PCH_SMBDATA 15,20,65,66
PCH_SMBCLK 15,20,65,66
TS#_DIMM0_1 15
SA0_DIM0
SA1_DIM0
1D5V_S3
3D3V_S0
C1401 SCD1U10V2KX-5GP
C1402 SC2D2U10V3KX-1GP DY
M_A_DQS#[7:0] 6
M_A_DQS[7:0] 6
M_A_DIM0_ODT0 6
M_A_DIM0_ODT1 6
M_VREF_CA_DIMM0 7
M_VREF_DQ_DIMM0 7,37
DDR3_DRAMRST# 15,37
0D75V_S0
H =9.2mm
Place these caps close to VTT1 and VTT2.
C1419 SC1U6D3V2KX-GP
C1420 SC1U6D3V2KX-GP DY
C1421 SC1U6D3V2KX-GP
C1422 SC1U6D3V2KX-GP DY
C1418 SC10U6D3V5KX-1GP DY
SODIMM A DECOUPLING
ST330U2VDM4-GP TC1401
C1403 SC10U6D3V5KX-1GP
C1404 SC10U6D3V5KX-1GP
C1405 SC10U10V5ZY-1GP DY
C1406 SC10U6D3V5KX-1GP
C1407 SC10U6D3V5KX-1GP
C1408 SC10U10V5ZY-1GP DY
C1409 SC10U6D3V5KX-1GP DY
C1410 SC10U6D3V5KX-1GP DY
C1414 SCD1U10V2KX-5GP
C1415 SCD1U10V2KX-5GP
C1416 SCD1U10V2KX-5GP
C1417 SCD1U10V2KX-5GP
Layout Note:
Place these Caps near SO-DIMMA.
R1401 10KR2J-3-GP
R1402 10KR2J-3-GP
Note:
If SA0 DIM0 = 0, SA1_DIM0 = 0
SO-DIMMA SPD Address is 0xA0
SO-DIMMA TS Address is 0x30
If SA0 DIM0 = 1, SA1_DIM0 = 0
SO-DIMMA SPD Address is 0xA2
SO-DIMMA TS Address is 0x32
Thermal EVENT
TS#_DIMM0_1
R1403 10KR2J-3-GP
3D3V_S0
<Core Design>
Wistron Corporation
21F, 88, Sec.1, Hsin Tai Wu Rd., Hsichih, Taipei Hsien 221, Taiwan, R.O.C.
Title
DDR3-SODIMM1
Size Custom
Document Number
LLW-1 / LGG-1
Rev -1
Date: Tuesday, January 18, 2011
Sheet 14 of 94

SSID = MEMORY

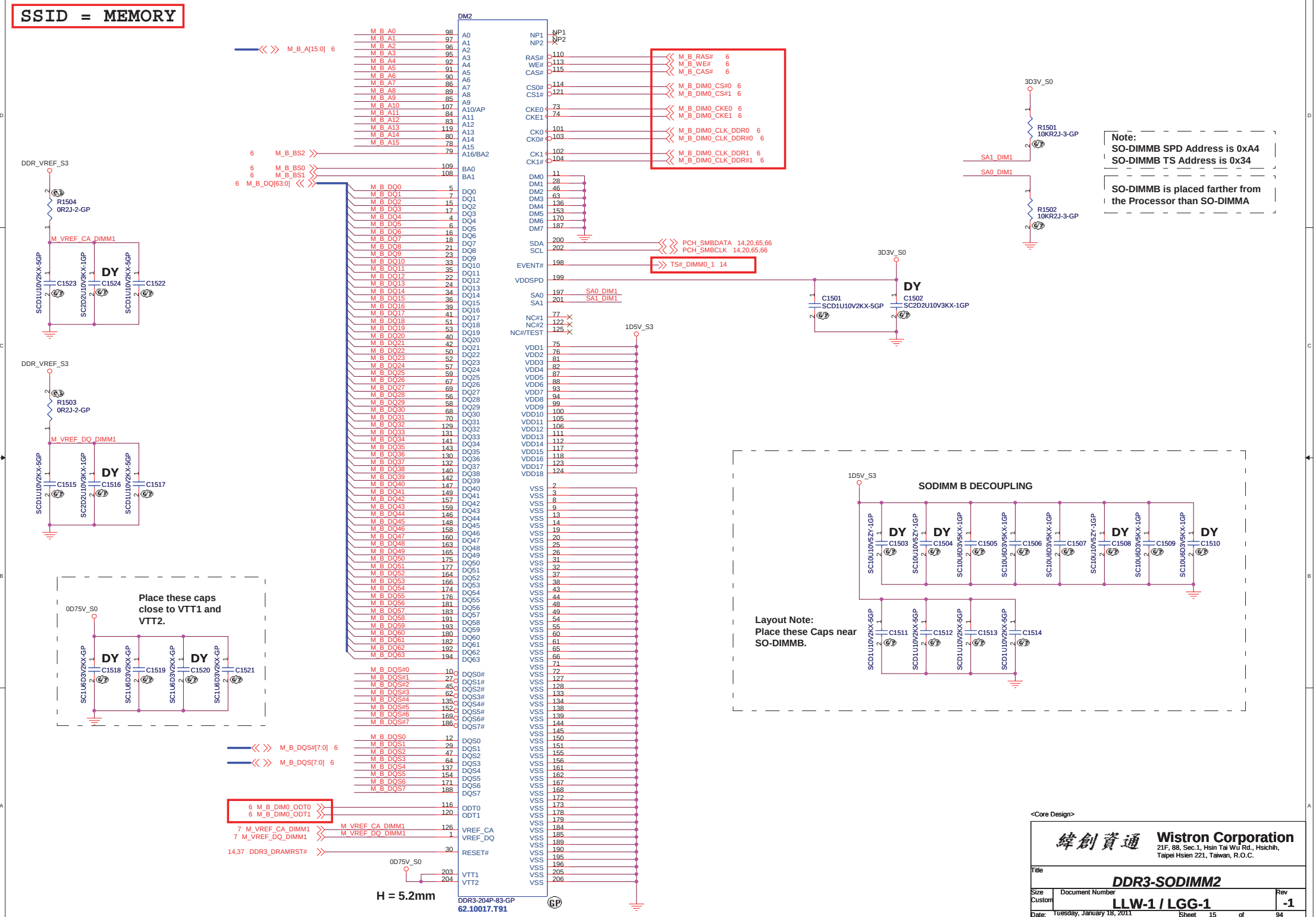

<Core Design>

Wistron Corporation
21F, 88, Sec.1, Hsin Tai Wu Rd., Hsichih, Taipei Hsien 221, Taiwan, R.O.C.

Title: DDR3-SODIMM2

Size: Custom | Document Number: LLW-1 / LGG-1 | Rev: -1

Date: Tuesday, January 18, 2011 | Sheet 15 of 94

(Blanking)

<Core Design>

緯創資通 Wistron Corporation
21F, 88, Sec.1, Hsin Tai Wu Rd., Hsichih,
Taipei Hsien 221, Taiwan, R.O.C.

Title: DDR3-SODIMM2

Size	Document Number	Rev
A4	LLW-1 / LGG-1	-1

Date: Tuesday, January 18, 2011 Sheet 16 of 94

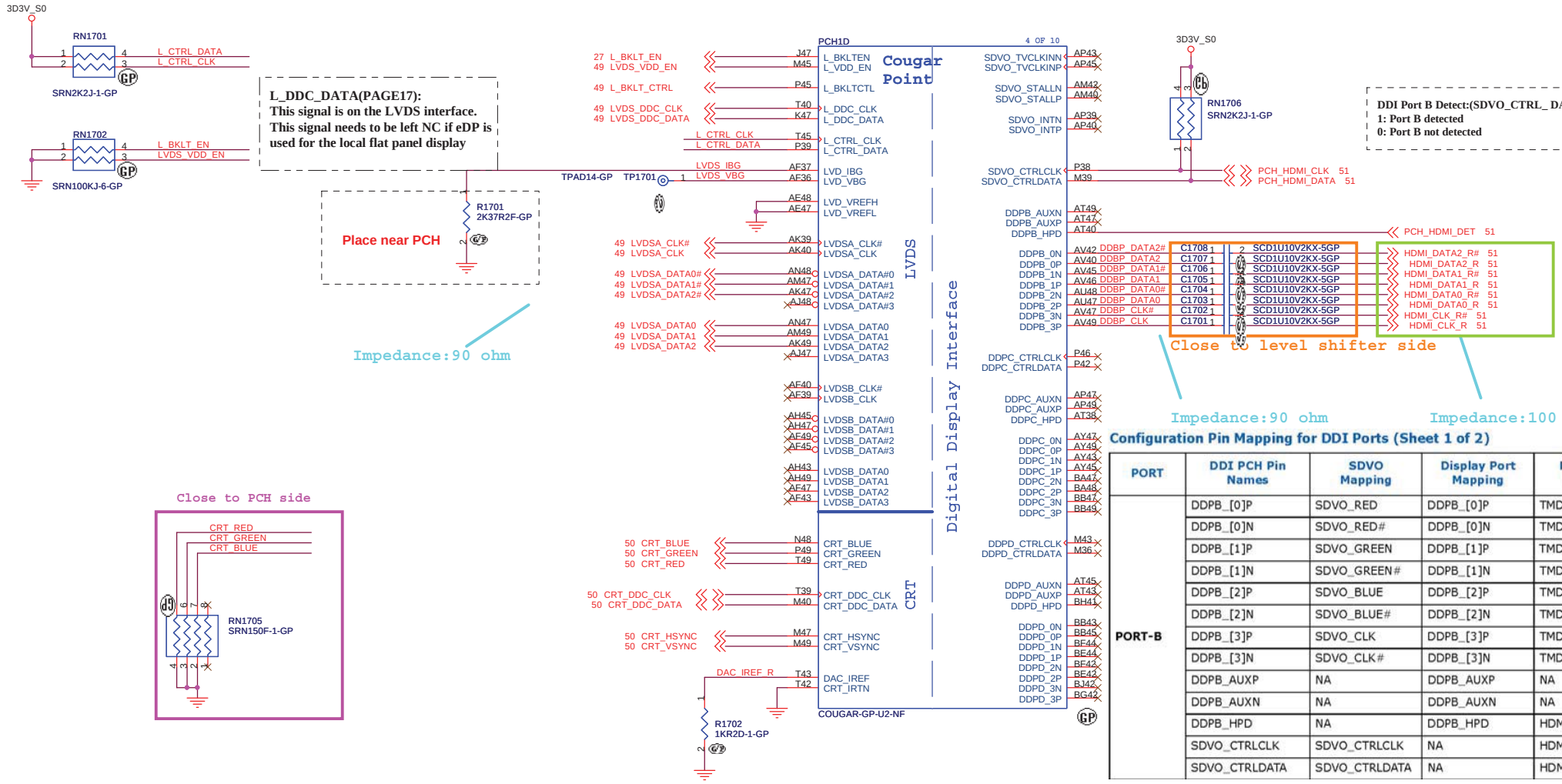

Configuration Pin Mapping for DDI Ports (Sheet 1 of 2)

PORT	DDI PCH Pin Names	SDVO Mapping	Display Port Mapping	HDMI/DVI Mapping
PORT-B	DDPB_[0]P	SDVO_RED	DDPB_[0]P	TMDSB_DATA2
	DDPB_[0]N	SDVO_RED#	DDPB_[0]N	TMDSB_DATA2#
	DDPB_[1]P	SDVO_GREEN	DDPB_[1]P	TMDSB_DATA1
	DDPB_[1]N	SDVO_GREEN#	DDPB_[1]N	TMDSB_DATA1#
	DDPB_[2]P	SDVO_BLUE	DDPB_[2]P	TMDSB_DATA0
	DDPB_[2]N	SDVO_BLUE#	DDPB_[2]N	TMDSB_DATA0#
	DDPB_[3]P	SDVO_CLK	DDPB_[3]P	TMDSB_CLK
	DDPB_[3]N	SDVO_CLK#	DDPB_[3]N	TMDSB_CLK#
	DDPB_AUXP	NA	DDPB_AUXP	NA
	DDPB_AUXN	NA	DDPB_AUXN	NA
	DDPB_HPD	NA	DDPB_HPD	HDMIB_HPD
	SDVO_CTRLCLK	SDVO_CTRLCLK	NA	HDMIB_CTRLCLK
	SDVO_CTRLDATA	SDVO_CTRLDATA	NA	HDMIB_CTRLDATA

<Core Design>

緯創資通 Wistron Corporation
21F, 88, Sec.1, Hsin Tai Wu Rd., Hsichih,
Taipei Hsien 221, Taiwan, R.O.C.

Title: PCH (LVDS/CRT/DDI)

Size: A3 | Document Number: LLW-1 / LGG-1 | Rev: -1

Date: Tuesday, January 18, 2011 | Sheet 17 of 94

SSID = PCH

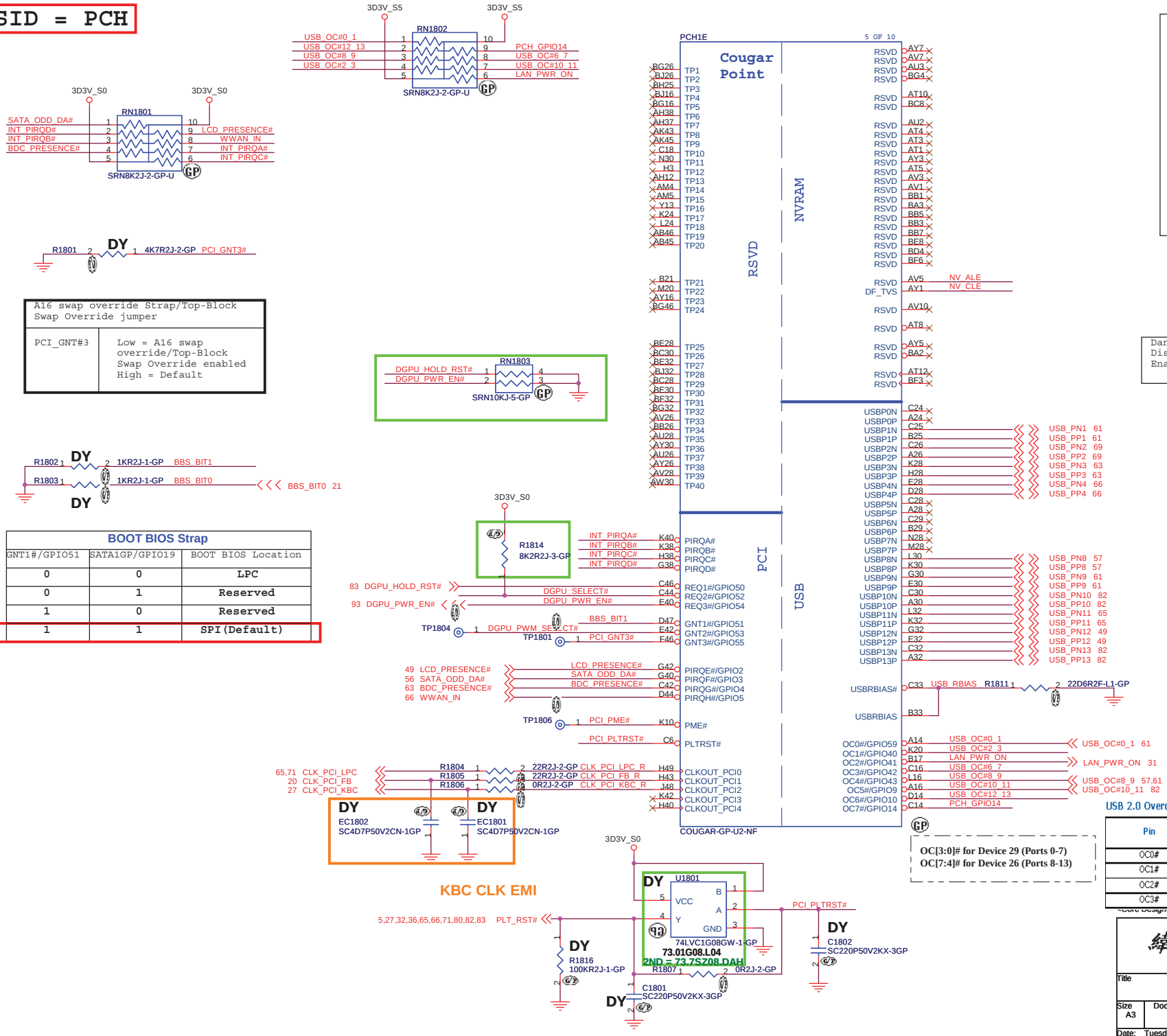

DMI & FDI Termination Voltage	
NV_CLE	Set to Vss when LOW Set to Vcc when HIGH

A16 swap override Strap/Top-Block Swap Override jumper	
PCI_GNT#3	Low = A16 swap override/Top-Block Swap Override enabled High = Default

Danbury Technology:
Disabled when Low.
Enable when High.

BOOT BIOS Strap		
GNT1#/GPIO51	SATA1GP/GPIO19	BOOT BIOS Location
0	0	LPC
0	1	Reserved
1	0	Reserved
1	1	SPI(Default)

USB	
Pair	Device
0	X
1	USB2
2	FINGERPRINT
3	BLUETOOTH
4	Mini Card2 (WWAN)
5	X
6	X
7	X
8	ESATA1
9	USB1
10	USB Ext. port 4
11	Mini Card1 (WLAN)
12	CAMERA
13	New Card

OC[3:0]# for Device 29 (Ports 0-7)
OC[7:4]# for Device 26 (Ports 8-13)

USB 2.0 Overcurrent Pin Default Usage

Pin	Default Port Mapping	Pin	Default Port Mapping
OC0#	Port 0, Port 1	OC4#	Port 8, Port 9
OC1#	Port 2, Port 3	OC5#	Port 10, Port 11
OC2#	Port 4, Port 5	OC6#	Port 12, Port 13
OC3#	Port 6, Port 7	OC7#	Not Used

緯創資通 Wistron Corporation
21F, 88, Sec.1, Hsin Tai Wu Rd., Hsichih,
Taipei Hsien 221, Taiwan, R.O.C.

Title: PCH (PCI/USB/NVRAM)

Size: A3 | Document Number: LLW-1 / LGG-1 | Rev: -1

Date: Tuesday, January 18, 2011 | Sheet 18 of 94

SSID = PCH

Signal Routing Guideline:
DMI_ZCOMP keep W=4 mils and routing length less than 500 mils.
DMI_IRCOMP keep W=4 mils and routing length less than 500 mils.

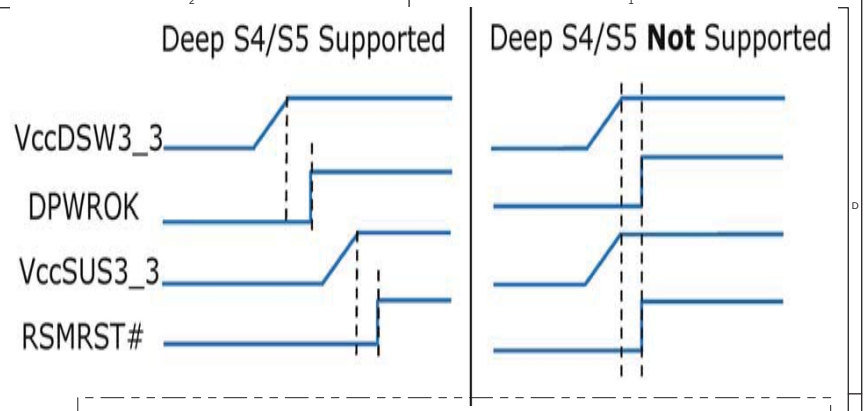

For platforms not supporting Deep S4/S5
1.VccSUS3_3 and VccDSW3_3 will rise at the same time (connected on board)
2.DPWROK and RSMRST# will rise at the same time (connected on board)
3.SLP_SUS# and SUSACK# are left as 'no connect'
4.SUSWARN# used as SUSPWRDNACK/GPIO30

PCH1C — Cougar Point — 3 OF 10

DMI: DMI0RXN BC24, DMI1RXN BE20, DMI2RXN BG18, DMI3RXN BG20 (DMI_RXN3, DMI_RXN2, DMI_RXN1, DMI_RXN0); DMI0RXP BE24, DMI1RXP BC20, DMI2RXP BJ18, DMI3RXP BJ20 (DMI_RXP3, DMI_RXP2, DMI_RXP1, DMI_RXP0); DMI0TXN AW24, DMI1TXN AW20, DMI2TXN BB18, DMI3TXN AV18 (DMI_TXN3, DMI_TXN2, DMI_TXN1, DMI_TXN0); DMI0TXP AY24, DMI1TXP AY20, DMI2TXP AY18, DMI3TXP AU18 (DMI_TXP3, DMI_TXP2, DMI_TXP1, DMI_TXP0)

FDI: FDI_RXN0 BJ14 (FDI_TXN7), FDI_RXN1 AY14 (FDI_TXN6), FDI_RXN2 BE14 (FDI_TXN5), FDI_RXN3 BH13 (FDI_TXN4), FDI_RXN4 BC12 (FDI_TXN3), FDI_RXN5 BJ12 (FDI_TXN2), FDI_RXN6 BG10 (FDI_TXN1), FDI_RXN7 BG9 (FDI_TXN0); FDI_RXP0 BG14 (FDI_TXP7), FDI_RXP1 BB14 (FDI_TXP6), FDI_RXP2 BF14 (FDI_TXP5), FDI_RXP3 BG13 (FDI_TXP4), FDI_RXP4 BE12 (FDI_TXP3), FDI_RXP5 BG12 (FDI_TXP2), FDI_RXP6 BJ10 (FDI_TXP1), FDI_RXP7 BH9 (FDI_TXP0)

DMI_ZCOMP BJ24, DMI_IRCOMP BG25, DMI2RBIAS BH21

FDI_INT AW16 — FDI_FSYNC0 AV12 — FDI_FSYNC1 BC10 — FDI_LSYNC0 AV14 — FDI_LSYNC1 BB10

System Power Management:
SUSACK# C12 — SYS_RESET# K3 — SYS_PWROK P12 — PWROK L22 — APWROK L10 — DRAMPWROK B13 — RSMRST# C21 — SUSWARN#/SUSPWRDNACK/GPIO30 K16 — PWRBTN# E20 — ACPRESENT/GPIO31 H20 — BATLOW#/GPIO72 E10 — RI# A10

DSWVRMEN A18 — DPWROK E22 — WAKE# B9 — CLKRUN#/GPIO32 N3 — SUS_STAT#/GPIO61 G8 — SUSCLK/GPIO62 N14 — SLP_S5#/GPIO63 D10 — SLP_S4# H4 — SLP_S3# E4 — SLP_A# G10 — SLP_SUS# G16 — PMSYNCH AP14 — SLP_LAN#/GPIO29 K14

COUGAR-GP-U2-NF

SYS_PWROK — DY R1926 10KR2J-3-GP; PWROK — R1904 100KR2J-1-GP

1D05V_VTT: R1901 49D9R2F-GP DMI_COMP_R; R1902 750R2F-GP RBIAS_CPY

3D3V_S0: R1903 DY 0R2J-2-GP SUSACK#; R1925 DY 0R2J-2-GP SYS_RESET#; R1905 10KR2J-3-GP; R1923 DY 0R2J-2-GP; R1906 0R2J-2-GP MEPWROK; R1907 DY 0R2J-2-GP

SUS_PWR_ACK; 5,11 XDP_DBRESET#; 36 SYS_PWROK; 27,36 S0_PWR_GOOD; 42,48 D85V_PWRGD; R1924 0R2J-2-GP; R1927 0R2J-2-GP; 36,37,45,46,47 RUNPWROK; 5,37 PM_DRAM_PWRGD

S0_PWR_GOOD after PM_SLP_S3# delay 200 ms

11 PM_RSMRST# — PM_RSMRST#; 27 SUS_PWR_ACK — SUS_PWR_ACK; 27 PM_PWRBTN#; 27 AC_PRESENT — AC_PRESENT; 20 BATLOW#; 20 PM_RI#

RTC_AUX_S5: R1911 DY 10KR2J-3-GP; R1910 0R2J-2-GP PM_RSMRST#

PCIE_WAKE# 65,32; PM_CLKRUN# 27; TP1901 TPAD14-GP; 0R2J-2-GP PCH_SUSCLK_KBC 27; TP1902 TPAD14-GP; R1913 0R2J-2-GP; R1914 0R2J-2-GP PM_SLP_S4# 27,46,82; R1915 0R2J-2-GP PM_SLP_S3# 27,36,37,47,82; TP1903TPAD14-GP; TP1904TPAD14-GP; H_PM_SYNC 5; TP1905TPAD14-GP

DSWODVREN - On Die DSW VR Enable	
HIGH	Enabled (DEFAULT)
LOW	Disabled

RTC_AUX_S5: R1917 330KR2J-L1-GP; R1918 330KR2J-L1-GP; DSWODVREN; DY

3D3V_S0: PM_CLKRUN# R1919 8K2R2J-3-GP

3D3V_S5: RN1901 SRN10KJ-6-GP — AC_PRESENT, SUS_PWR_ACK, PEG_B_CLK_RQ# 20

PCIE_WAKE#
CRB : 1K
CEKLT: 10K

R1921 10KR2J-3-GP PCIE_WAKE#; DY R1922 10KR2J-3-GP PM_PWRBTN#; R1920 10KR2J-3-GP PM_SLP_LAN#

Need Check!!

PM_RSMRST#
CRB : PL 10K
ANNIE : PL 100K

R1908 10KR2J-3-GP PM_RSMRST#

3D3V_AUX_S5: R1909 100KR2J-1-GP; R1916 10KR2J-3-GP 3V_5V_POK_#; Q1901 2N7002KDW-GP; PM_RSMRST# R1912 1KR2J-1-GP RSMRST#_KBC 27; 3V_5V_POK 41

84.2N702.A3F
2nd = 84.DM601.03F

<Core Design>

緯創資通 Wistron Corporation
21F, 88, Sec.1, Hsin Tai Wu Rd., Hsichih, Taipei Hsien 221, Taiwan, R.O.C.

Title: PCH (DMI/FDI/PM)
Size: A3 | Document Number: LLW-1 / LGG-1 | Rev: -1
Date: Tuesday, January 18, 2011 | Sheet 19 of 94

SSID = PCH

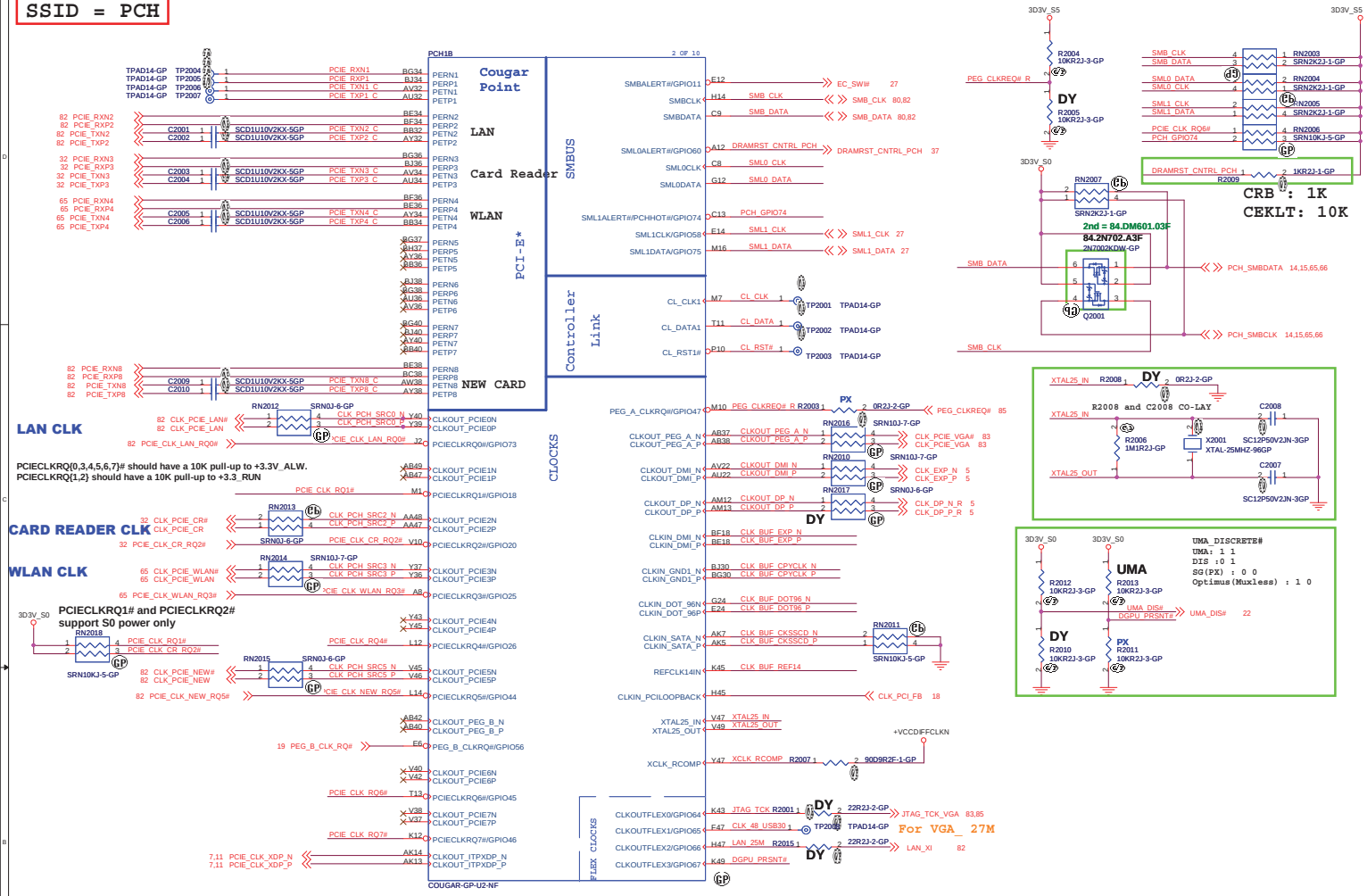

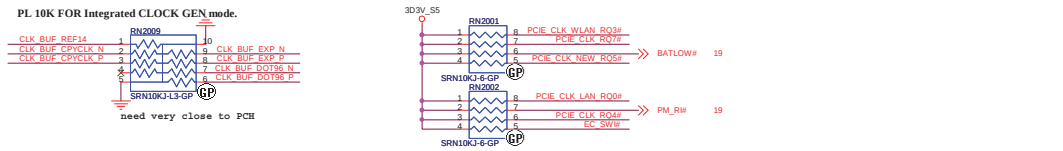

Table 20.1- Dual N-Channel MOSFET multi-source

Supplier	Description	Lenovo P/N	Wistron P/N
PANJIT	2N7002KDW	N/A	84.2N702.A3F
DIODES	DMN601DWK-7	N/A	84.DM601.03F
NXP	2N7002BKS	N/A	84.2N702.E3F

<Core Design>

緯創資通 Wistron Corporation
21F, 88, Sec.1, Hsin Tai Wu Rd., Hsichih,
Taipei Hsien 221, Taiwan, R.O.C.

Title: PCH (PCI-E/SMBUS/CLOCK/CL)

Size: A2 | Document Number: LLW-1 / LGG-1 | Rev: -1

Date: Tuesday, January 18, 2011 | Sheet 20 of 94

SSID = PCH

Table 21.1 Project_ID

	LW_GG_SEL
LW	High
GG	LOW

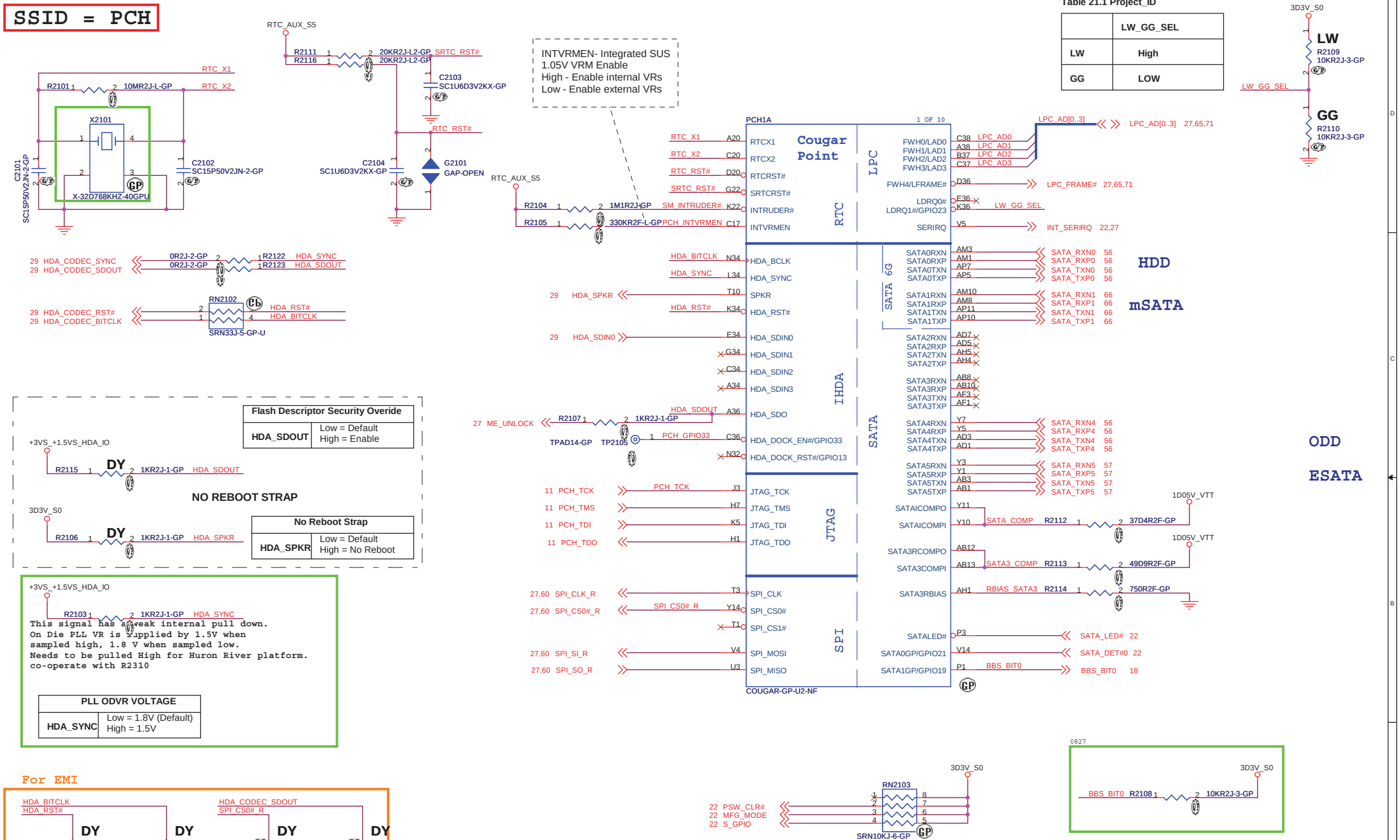

HDA_SYNC: This strap is sampled on rising edge of RSMRST# and is used to sample 1.5V VccVRM supply mode. 1K external pull-up resistor is required on this signal on the board. Signal may have leakage paths via powered off devices (Audio Codec) and hence contend with the external pull-up. A blocking FET is recommended in such a case to isolate HDA_SYNC from the Audio Codec device until after the Strap sampling is complete.

<Core Design>

緯創資通 Wistron Corporation
21F, 88, Sec.1, Hsin Tai Wu Rd., Hsichih,
Taipei Hsien 221, Taiwan, R.O.C.

Title: PCH (SPI/RTC/LPC/SATA/IHDA)

Size: A3 | Document Number: LLW-1 / LGG-1 | Rev: -1

Date: Tuesday, January 18, 2011 | Sheet 21 of 94

SSID = PCH

Note:
For PCH debug with XDP, need to NO STUFF R2218

	INTERNAL GFX	EXTERNAL GFX
R2205	DY	10K
R2206	100K	DY

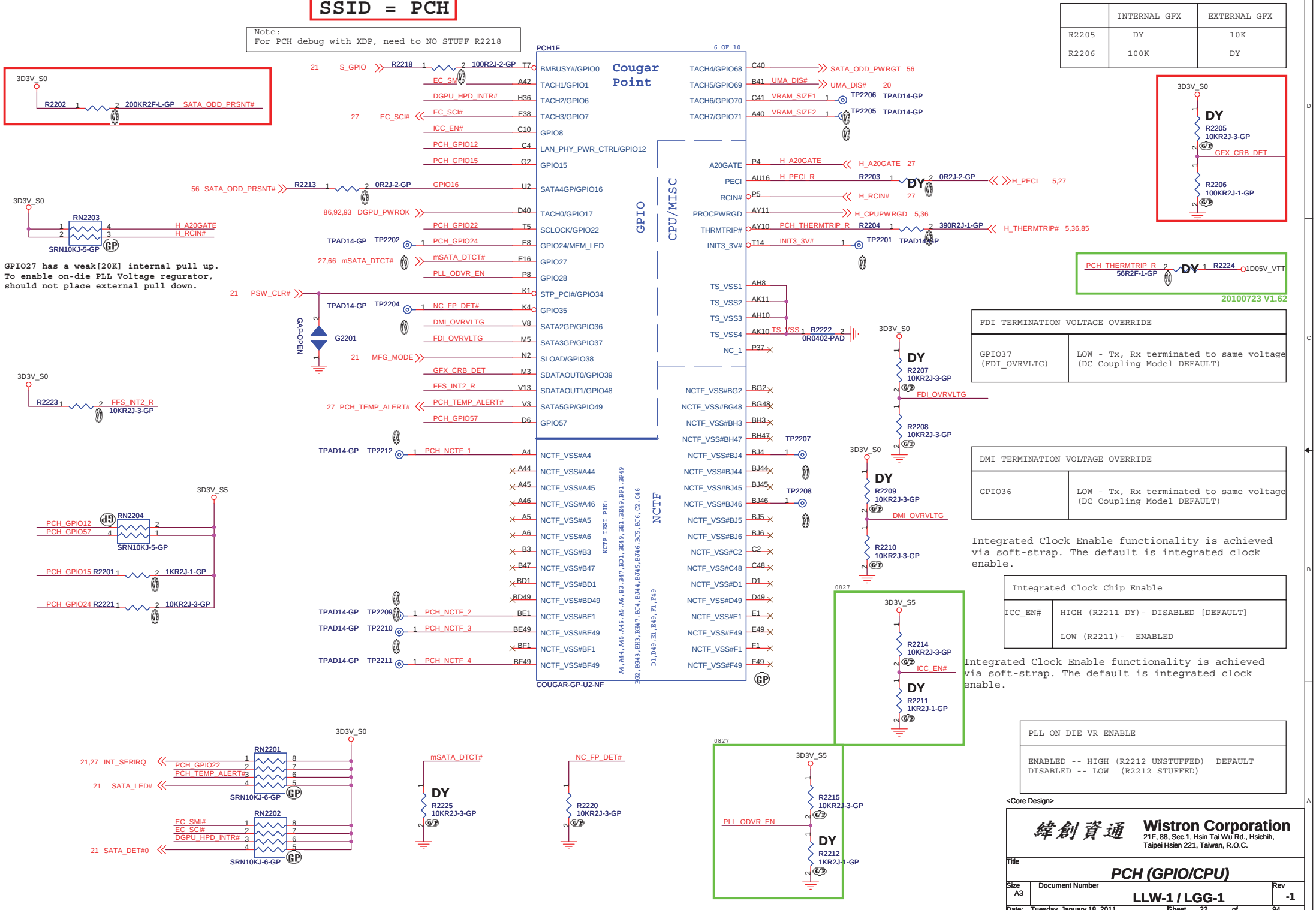

FDI TERMINATION VOLTAGE OVERRIDE	
GPIO37 (FDI_OVRVLTG)	LOW - Tx, Rx terminated to same voltage (DC Coupling Model DEFAULT)

DMI TERMINATION VOLTAGE OVERRIDE	
GPIO36	LOW - Tx, Rx terminated to same voltage (DC Coupling Model DEFAULT)

Integrated Clock Enable functionality is achieved via soft-strap. The default is integrated clock enable.

Integrated Clock Chip Enable	
ICC_EN#	HIGH (R2211 DY)- DISABLED [DEFAULT]
	LOW (R2211)- ENABLED

Integrated Clock Enable functionality is achieved via soft-strap. The default is integrated clock enable.

PLL ON DIE VR ENABLE
ENABLED -- HIGH (R2212 UNSTUFFED) DEFAULT DISABLED -- LOW (R2212 STUFFED)

<Core Design>

緯創資通 Wistron Corporation
21F, 88, Sec.1, Hsin Tai Wu Rd., Hsichih,
Taipei Hsien 221, Taiwan, R.O.C.

Title: PCH (GPIO/CPU)

Size: A3 | Document Number: LLW-1 / LGG-1 | Rev: -1

Date: Tuesday, January 18, 2011 | Sheet 22 of 94

SSID = PCH

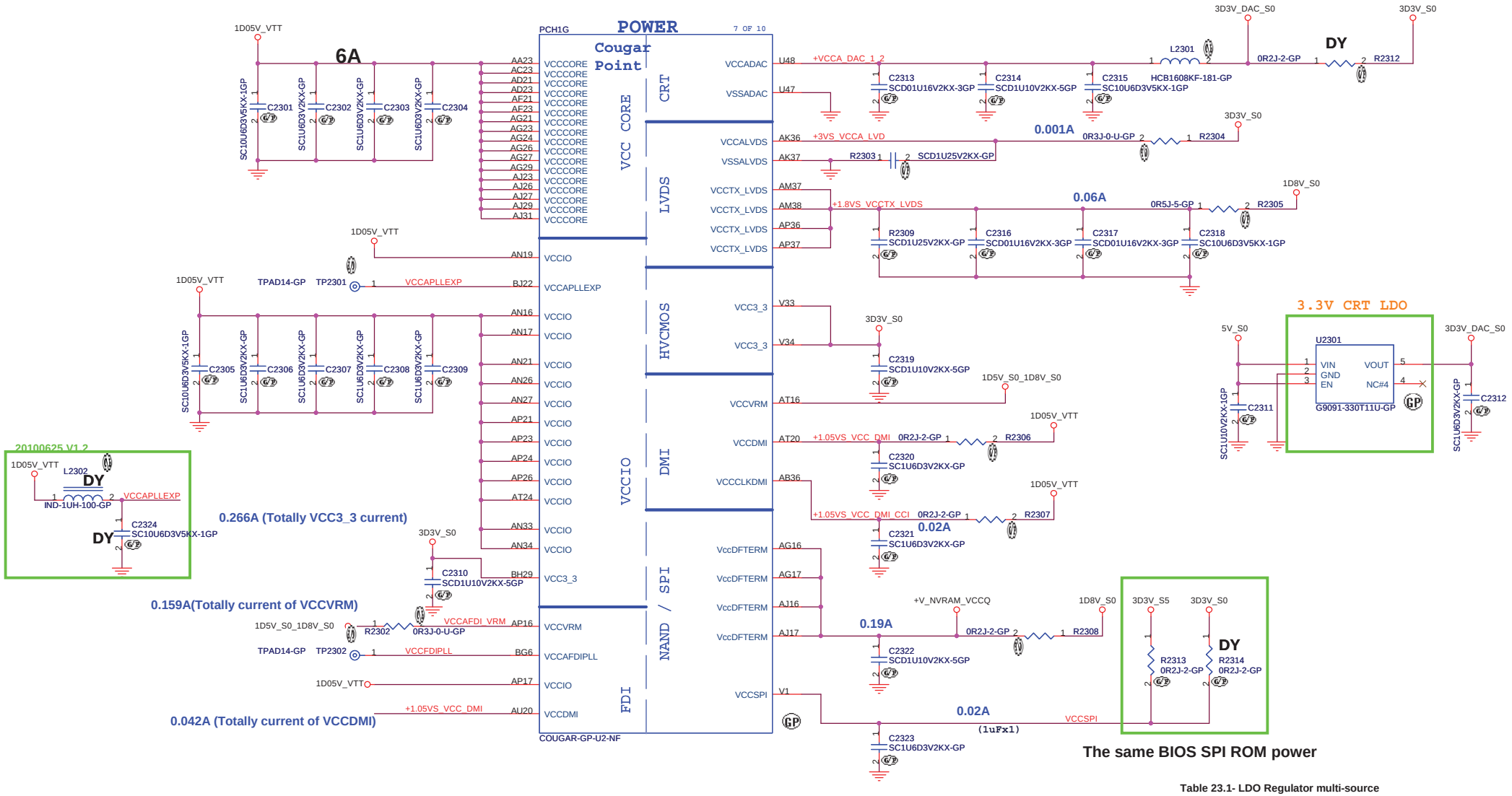

VCCVRM(Internal PLL and VRMs):
A.1.5V for Mobile
B.1.8 V for Desktop
co-operate with R2103

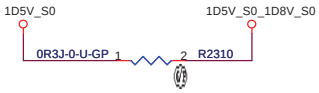

Table 23.1- LDO Regulator multi-source

Supplier	Description	Lenovo P/N	Wistron P/N
GMT	G9091-330T11U	N/A	74.09091.J3F
RICHTEK	RT9198-33GBR	N/A	74.09198.Q7F

<Core Design>

緯創資通 Wistron Corporation
21F, 88, Sec.1, Hsin Tai Wu Rd., Hsichih,
Taipei Hsien 221, Taiwan, R.O.C.

Title: PCH (POWER1)

Size: A3 | Document Number: LLW-1 / LGG-1 | Rev: -1

Date: Tuesday, January 18, 2011 | Sheet 23 of 94

SSID = PCH

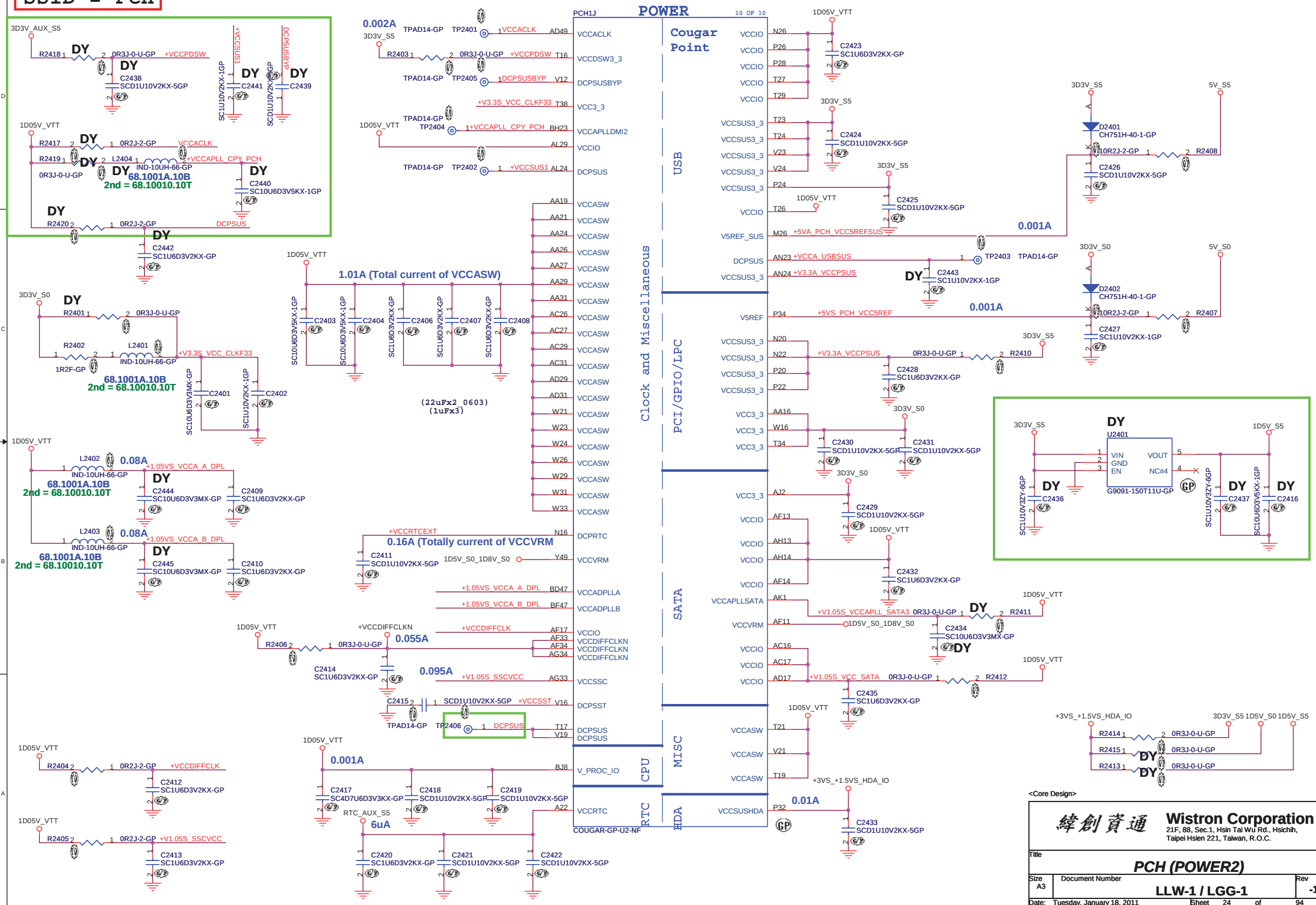
PCH1J
POWER
10 OF 10
Cougar Point
USB
PCI/GPIO/LPC
Clock and Miscellaneous
SATA
MISC
CPU
RTC
HDA
COUGAR-GP-U2-NF
1.01A (Total current of VCCASW)
0.16A (Totally current of VCCVRM)
0.055A
0.095A
0.001A
0.01A
6uA
0.08A
0.002A
68.1001A.10B
2nd = 68.10010.10T
(22uFx2_0603)
(1uFx3)
+V3.3S_VCC_CLKF33
+VCCASW
+VCCRTCEXT
+VCCDIFFCLKN
+VCCDIFFCLK
+V1.05S_SSCVCC
+VCCSST
+1.05VS_VCCA_A_DPL
+1.05VS_VCCA_B_DPL
+V1.05S_VCCAPLL_SATA3
+V1.05S_VCC_SATA
+5VA_PCH_VCC5REFSUS
+5VS_PCH_VCC5REF
+VCCA_USBSUS
+V3.3A_VCCPSUS
+3VS_+1.5VS_HDA_IO
Wistron Corporation
21F, 88, Sec.1, Hsin Tai Wu Rd., Hsichih,
Taipei Hsien 221, Taiwan, R.O.C.
Title
PCH (POWER2)
Size A3
Document Number
LLW-1 / LGG-1
Rev -1
Date: Tuesday, January 18, 2011
Sheet 24 of 94

SSID = PCH

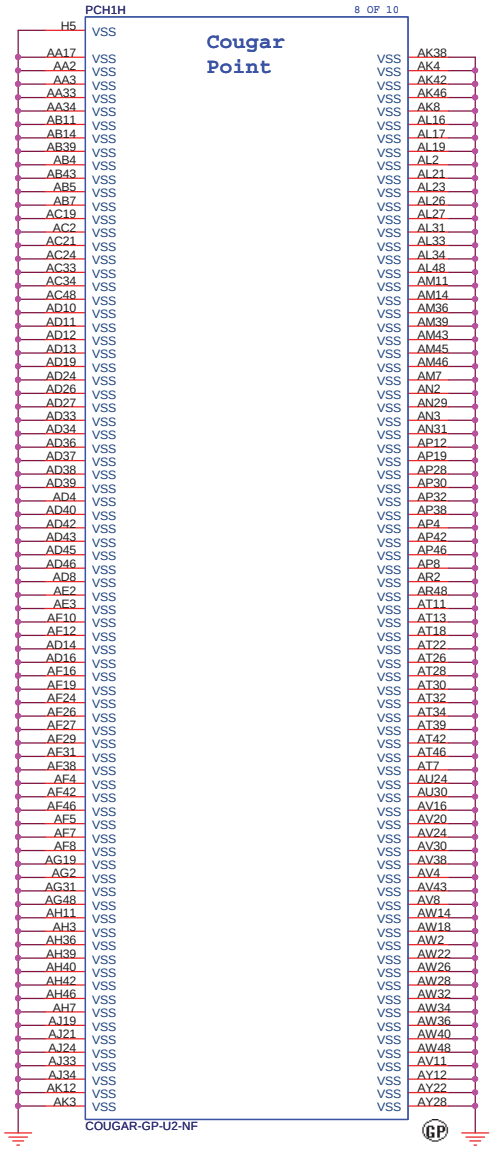

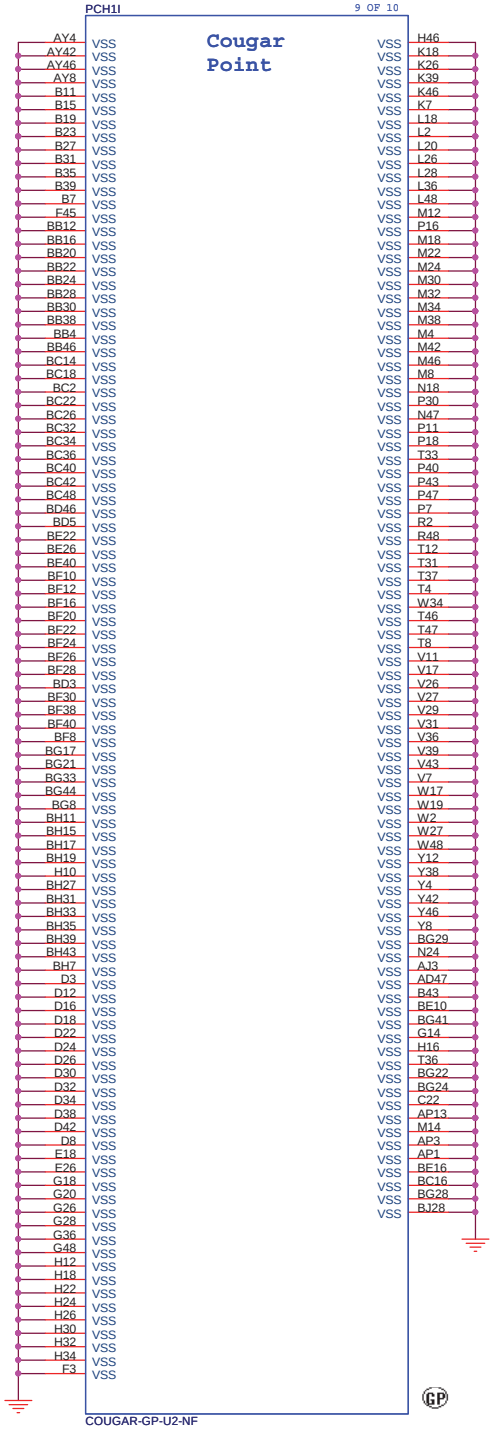

<Core Design>

緯創資通 **Wistron Corporation**
21F, 88, Sec.1, Hsin Tai Wu Rd., Hsichih,
Taipei Hsien 221, Taiwan, R.O.C.

Title	***PCH (VSS)***	
Size A3	Document Number **LLW-1 / LGG-1**	Rev **-1**
Date: Tuesday, January 18, 2011	Sheet 25 of 94	

BLANK

<Core Design>

緯創資通 Wistron Corporation
21F, 88, Sec.1, Hsin Tai Wu Rd., Hsichih,
Taipei Hsien 221, Taiwan, R.O.C.

Title

Reserved

Size	Document Number	Rev
A4	LLW-1 / LGG-1	-1

Date: Tuesday, January 18, 2011 Sheet 26 of 94

SSID = KBC

PCB Version A/D (PIN 98)	Pull-Low Resistor	Pull-High Resistor (3D3V_AUX_S5)	Voltage
SA	100K	10K	3.0V
SB	100K	20K	2.75V
SC	100K	33K	2.48V
SD	100K	47K	2.24V
-1	100K	64.9K	2.0V
Reserved	100K	76.8K	1.87V
Reserved	100K	100K	1.65V

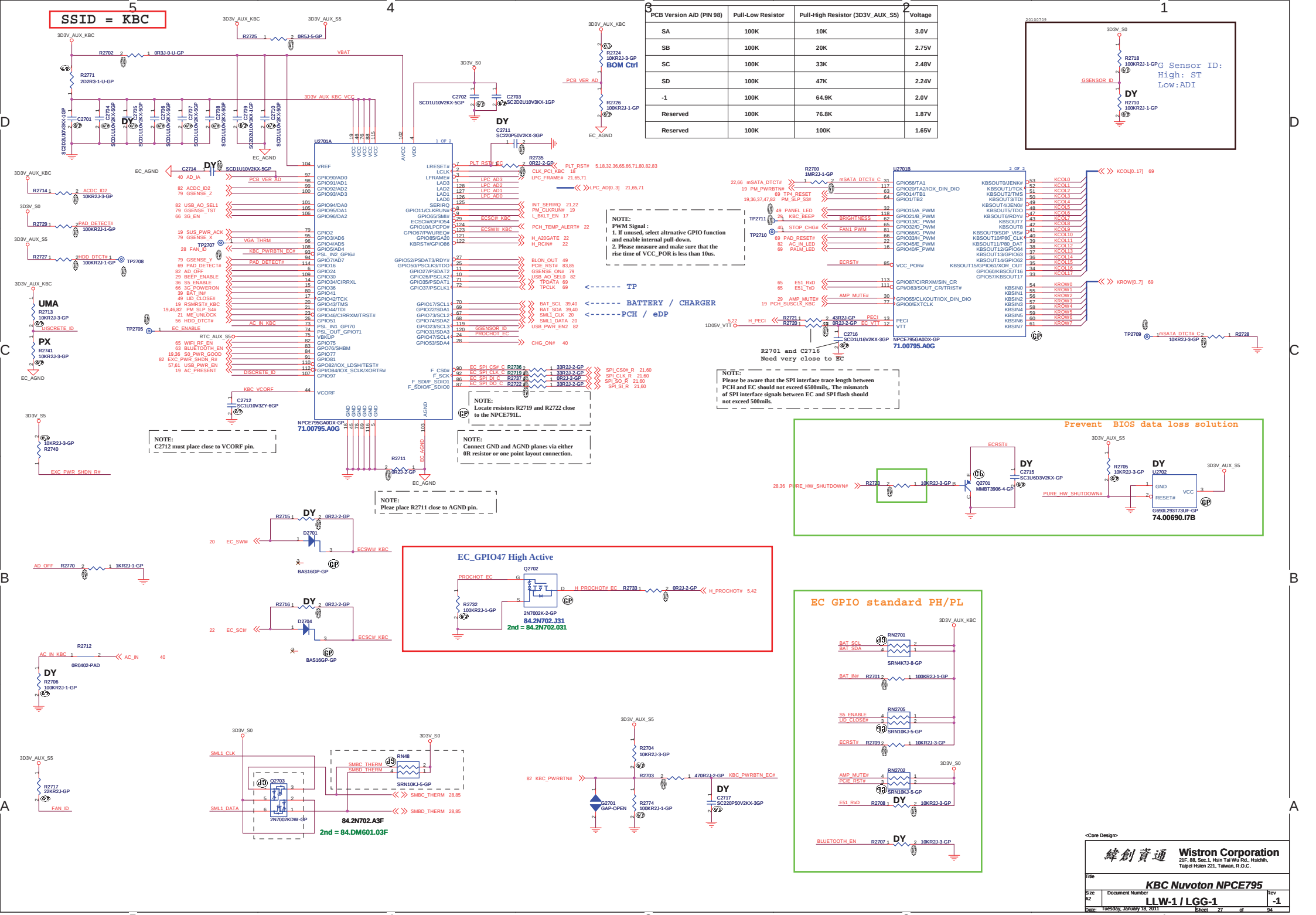

SSID = Thermal

Thermal sensor

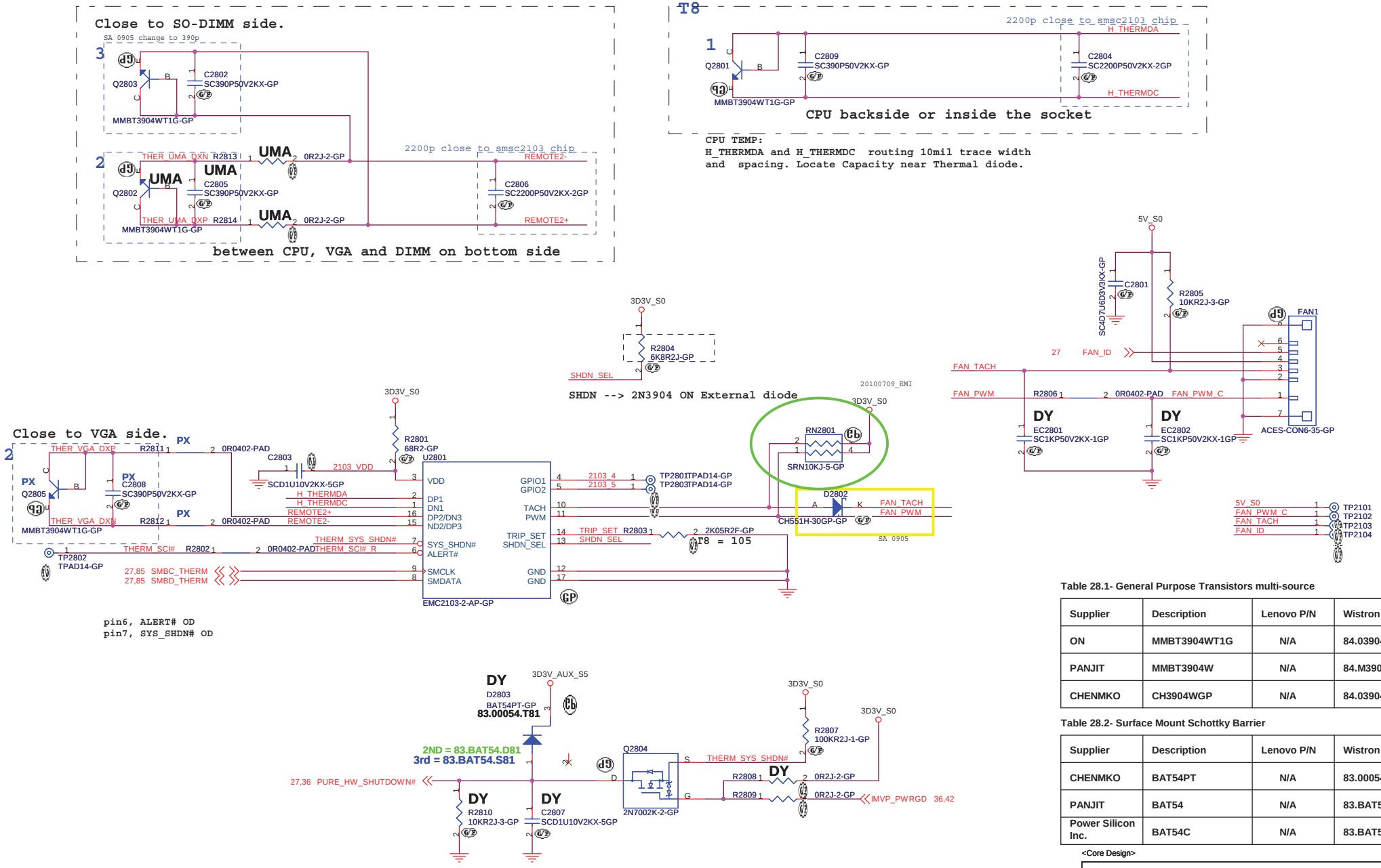

Table 28.1- General Purpose Transistors multi-source

Supplier	Description	Lenovo P/N	Wistron P/N
ON	MMBT3904WT1G	N/A	84.03904.R11
PANJIT	MMBT3904W	N/A	84.M3904.A11
CHENMKO	CH3904WGP	N/A	84.03904.Y11

Table 28.2- Surface Mount Schottky Barrier

Supplier	Description	Lenovo P/N	Wistron P/N
CHENMKO	BAT54PT	N/A	83.00054.T81
PANJIT	BAT54	N/A	83.BAT54.D81
Power Silicon Inc.	BAT54C	N/A	83.BAT54.S81

<Core Design>

緯創資通 Wistron Corporation
21F, 88, Sec.1, Hsin Tai Wu Rd., Hsichih,
Taipei Hsien 221, Taiwan, R.O.C.

Title: THERMAL SENSOR SMSC EMC2103

Size: A3 | Document Number: LLW-1 / LGG-1 | Rev: -1

Date: Tuesday, January 18, 2011 | Sheet 28 of 94

AUDIO CODEC

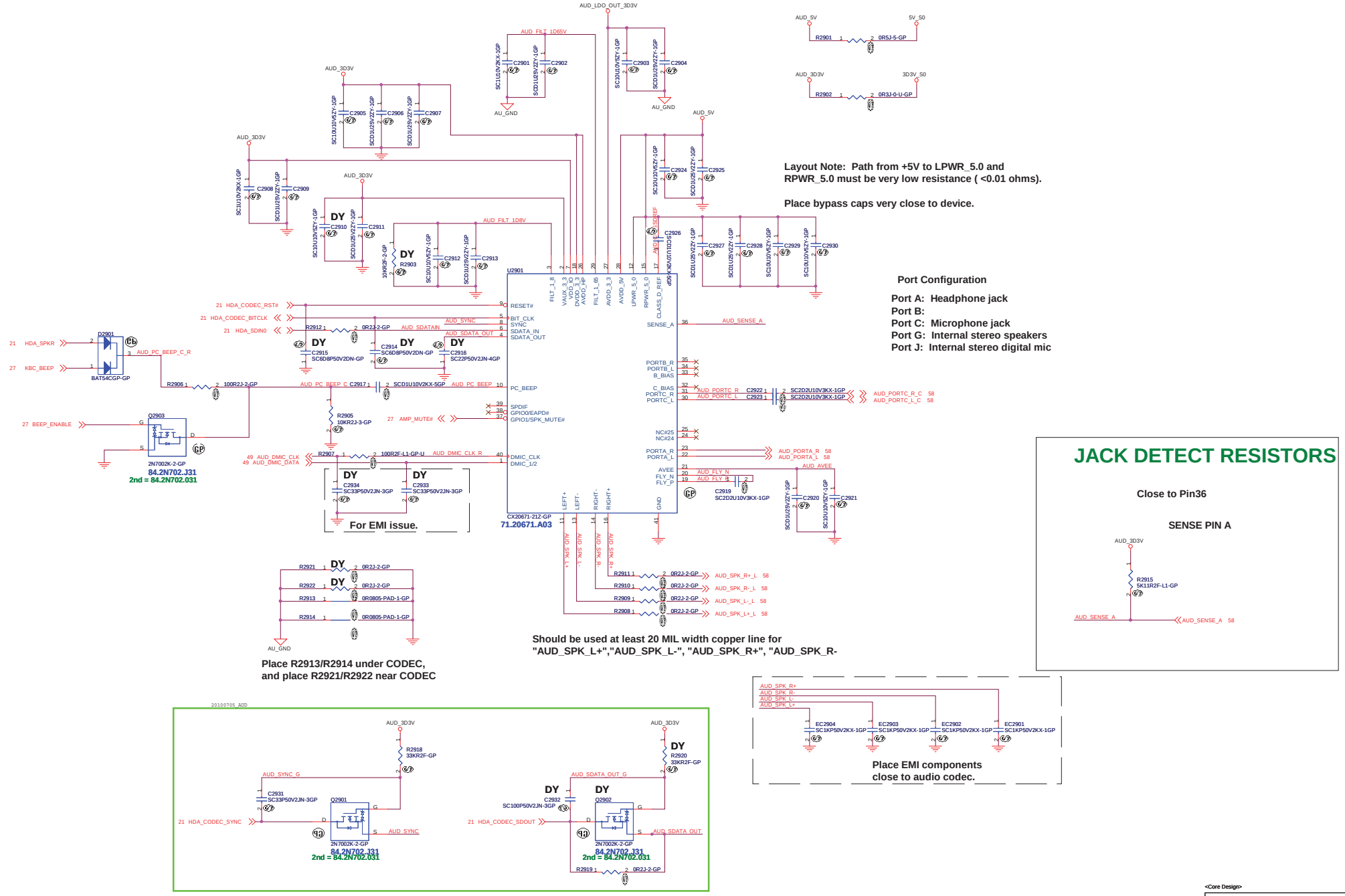

<Core Design>

緯創資通 Wistron Corporation 21F, 88, Sec.1, Hsin Tai Wu Rd., Hsichih, Taipei Hsien 221, Taiwan, R.O.C.		
Title: AUDIO CODEC		
Size: A2	Document Number: LLW-1 / LGG-1	Rev: -1
Date: Tuesday, January 18, 2011	Sheet 29 of 94	

<Core Design>

緯創資通 **Wistron Corporation**
21F, 88, Sec.1, Hsin Tai Wu Rd., Hsichih,
Taipei Hsien 221, Taiwan, R.O.C.

Title: ***AMP***

Size	Document Number	Rev
A3	**LLW-1 / LGG-1**	**-1**

Date: Tuesday, January 18, 2011 Sheet 30 of 94

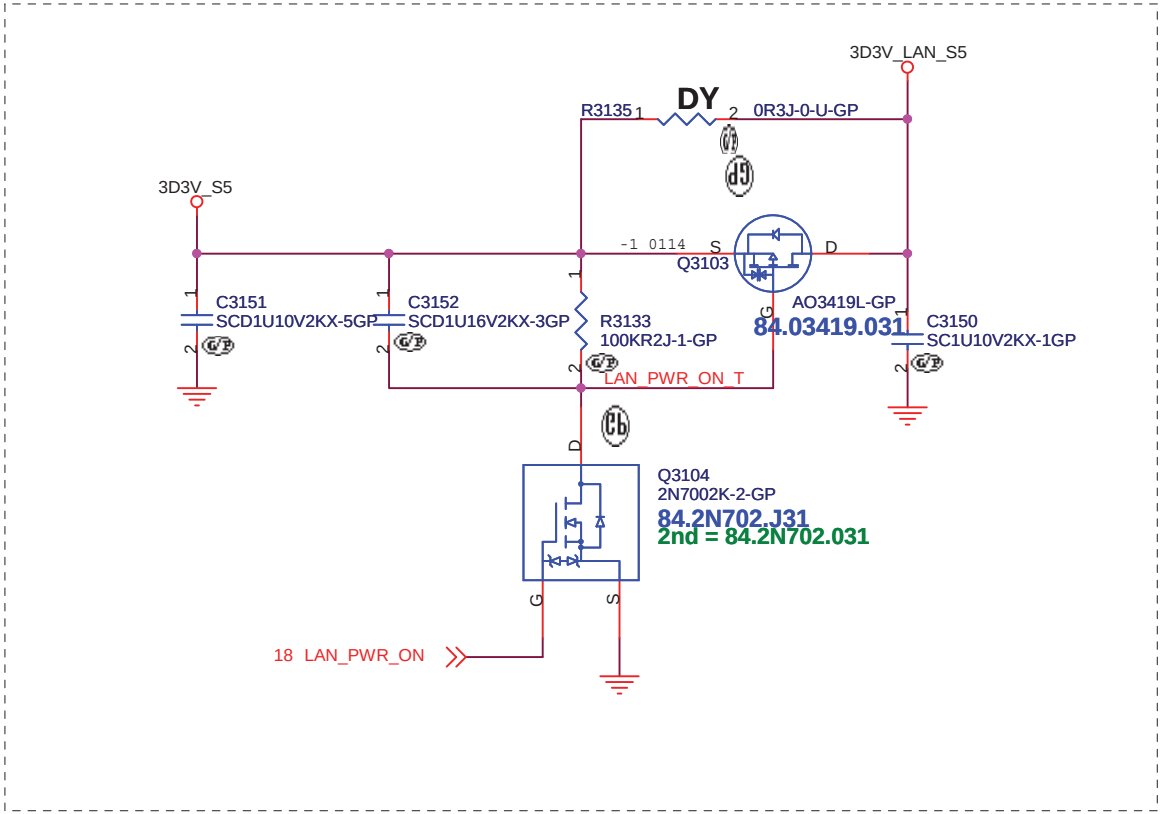

<Core Design>

緯創資通 **Wistron Corporation**
21F, 88, Sec.1, Hsin Tai Wu Rd., Hsichih,
Taipei Hsien 221, Taiwan, R.O.C.

Title: ***LAN PWR SW***

Size	Document Number	Rev
A4	LLW-1 / LGG-1	-1

Date: Tuesday, January 18, 2011 Sheet 31 of 94

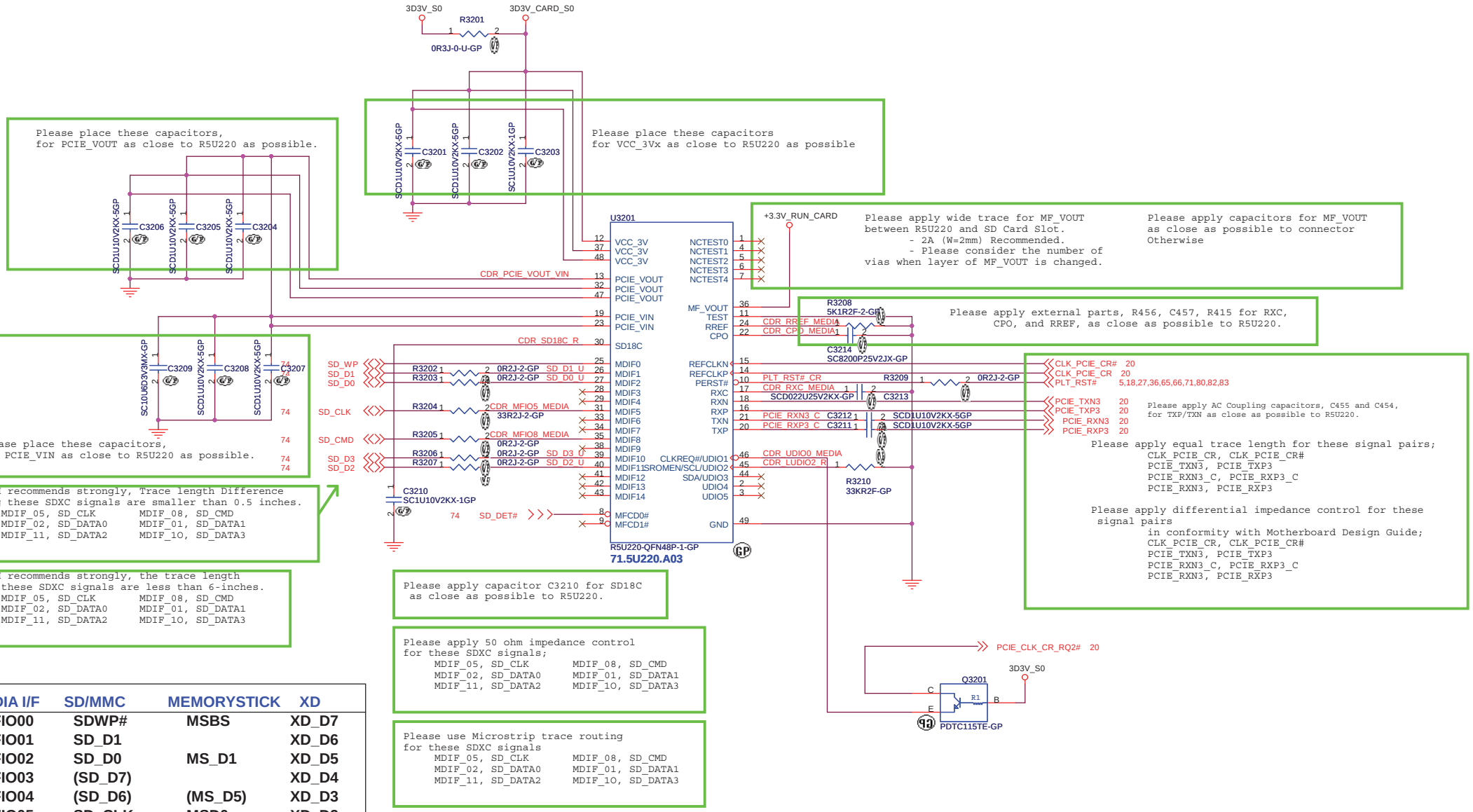

MEDIA I/F	SD/MMC	MEMORYSTICK	XD
MFIO00	SDWP#	MSBS	XD_D7
MFIO01	SD_D1		XD_D6
MFIO02	SD_D0	MS_D1	XD_D5
MFIO03	(SD_D7)		XD_D4
MFIO04	(SD_D6)	(MS_D5)	XD_D3
MFIO05	SD_CLK	MSD0	XD_D2
MFIO06			XD_D1
MFIO07	(SD_D5)	(MS_D4)	XD_D0
MFIO08	SD_CDM	MS_D2	XD_WP#
MFIO09	(SD_D4)	(MS_D6)	XD_WE#
MFIO10	SD_D3	MS_D3	XD_ALE
MFIO11	SD_D2		XD_CLE
MFIO12			XD_CE#
MFIO13		(MS_D7)	XD_RE#
MFIO14		MS_CLK	XD_R/B
MFCD0#	SDDC#		XDCD0#
MFCD1#		MSINS#	XDCD1#

<Core Design>

緯創資通 Wistron Corporation
21F, 88, Sec.1, Hsin Tai Wu Rd., Hsichih,
Taipei Hsien 221, Taiwan, R.O.C.

Title: R5U220 (CARD READER)

Size: A3 | Document Number: LLW-1 / LGG-1 | Rev: -1

Date: Tuesday, January 18, 2011 | Sheet 32 of 94

BLANK

<Core Design>

緯創資通 Wistron Corporation
21F, 88, Sec.1, Hsin Tai Wu Rd., Hsichih,
Taipei Hsien 221, Taiwan, R.O.C.

Title	1394	
Size A4	Document Number LLW-1 / LGG-1	Rev -1
Date: Tuesday, January 18, 2011	Sheet 33 of 94	

BLANK

<Core Design>

緯創資通 Wistron Corporation
21F, 88, Sec.1, Hsin Tai Wu Rd., Hsichih,
Taipei Hsien 221, Taiwan, R.O.C.

Title: *Smart Card Reader*

Size	Document Number	Rev
A4	LLW-1 / LGG-1	-1

Date: Tuesday, January 18, 2011 Sheet 34 of 94

BLANK

<Core Design>

緯創資通 Wistron Corporation
21F, 88, Sec.1, Hsin Tai Wu Rd., Hsichih,
Taipei Hsien 221, Taiwan, R.O.C.

Title	USB3.0	
Size A4	Document Number LLW-1 / LGG-1	Rev -1
Date: Tuesday, January 18, 2011	Sheet 35 of 94	

Power Sequence

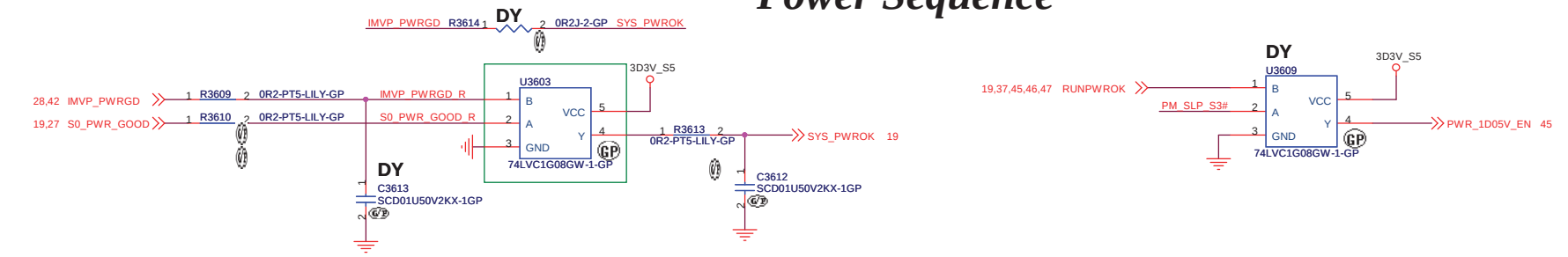

Run Power

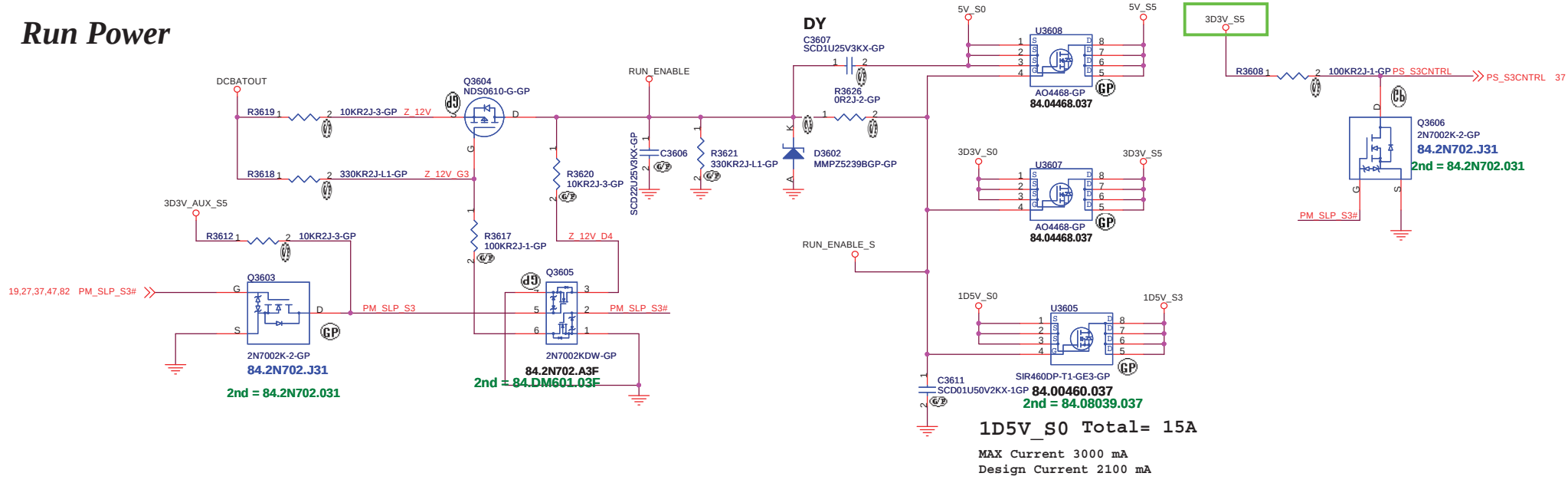

1D5V_S0 Total= 15A

MAX Current 3000 mA
Design Current 2100 mA

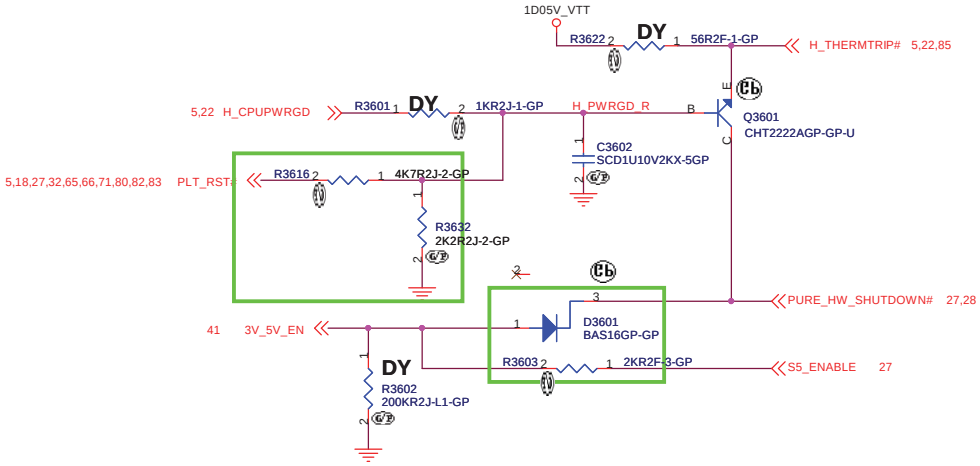

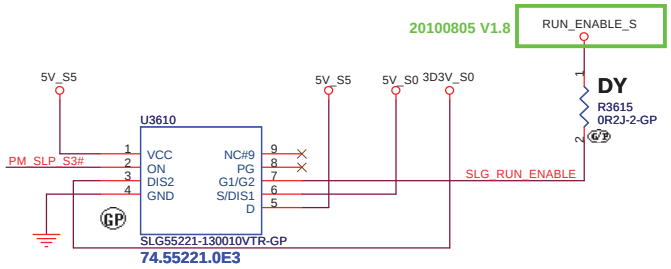

<Core Design>

緯創資通	**Wistron Corporation** 21F, 88, Sec.1, Hsin Tai Wu Rd., Hsichih, Taipei Hsien 221, Taiwan, R.O.C.	
Title	**POWER SEQUENCE**	
Size A3	Document Number **LLW-1 / LGG-1**	Rev -1
Date: Tuesday, January 18, 2011	Sheet 36 of 94	

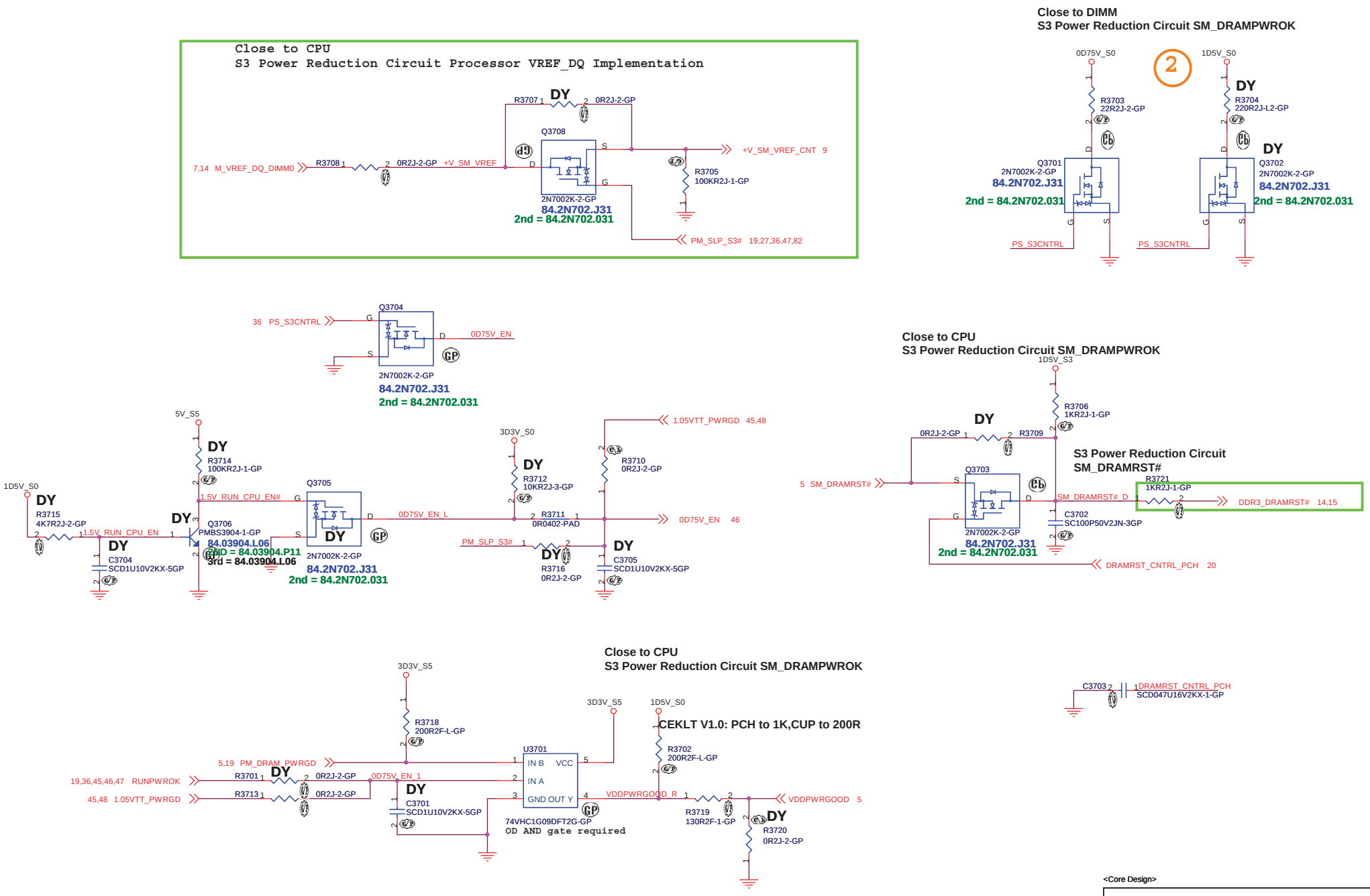

<Core Design>

緯創資通 **Wistron Corporation**
21F, 88, Sec.1, Hsin Tai Wu Rd., Hsichih,
Taipei Hsien 221, Taiwan, R.O.C.

Title: ***ADAPTER OCP / S3 reduction***

Size	Document Number	Rev
A3	LLW-1 / LGG-1	-1

Date: Tuesday, January 18, 2011 Sheet 37 of 94

<Core Design>

緯創資通 **Wistron Corporation**
21F, 88, Sec.1, Hsin Tai Wu Rd., Hsichih,
Taipei Hsien 221, Taiwan, R.O.C.

Title	***DCIN_JACK***		
Size	Document Number	**LLW-1 / LGG-1**	Rev **-1**
Date: Tuesday, January 18, 2011		Sheet 38 of 94	

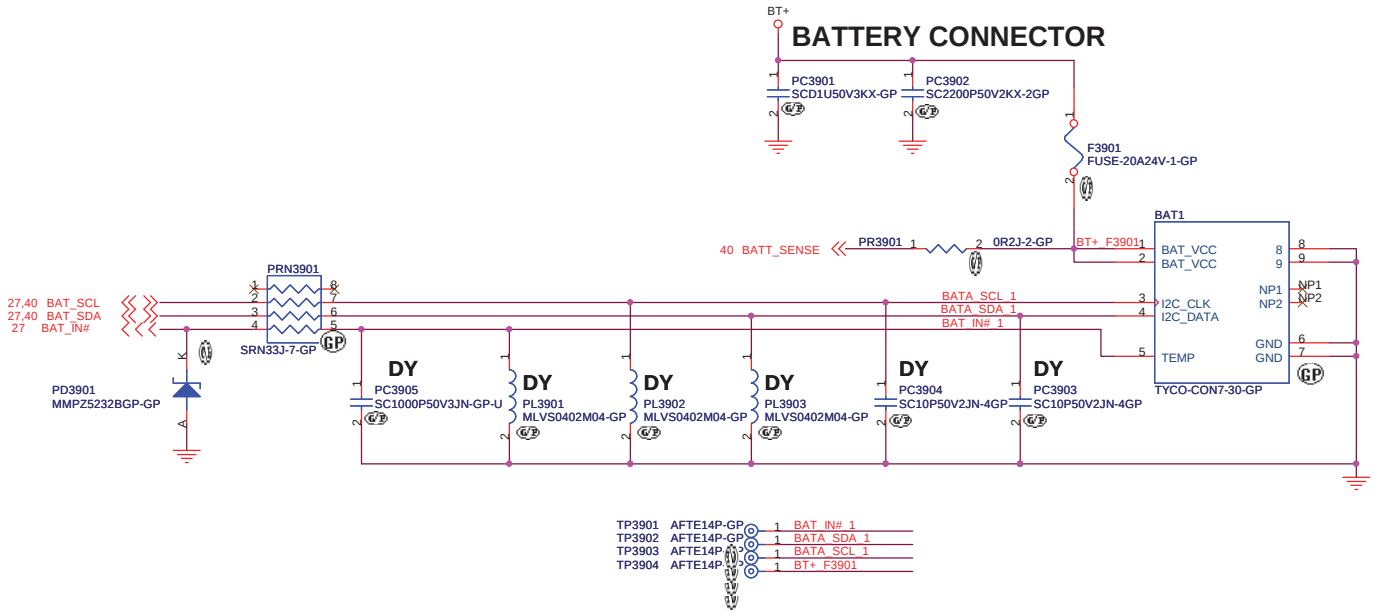

Table 39.1- Surface Mount Zener ESD multi-source

Supplier	Description	Lenovo P/N	Wistron P/N
CHENMKO	MMPZ5232BGP	N/A	83.5R603.R3F
DIODES	MMSZ5232BS-7-F	N/A	83.5R603.K3F
PANJIT	MMSZ5232BS	N/A	83.5R603.Q3F

<Core Design>

緯創資通 **Wistron Corporation**
21F, 88, Sec.1, Hsin Tai Wu Rd., Hsichih,
Taipei Hsien 221, Taiwan, R.O.C.

Title: ***BATT_CONN***

Size | Document Number: **LLW-1 / LGG-1** | Rev: **-1**

Date: Tuesday, January 18, 2011 | Sheet 39 of 94

AD+ total power	R1	R2	AD+ total power	R1	R2
65w	187k	49.9k	80w	137k	49.9k
90w	121k	49.9k			

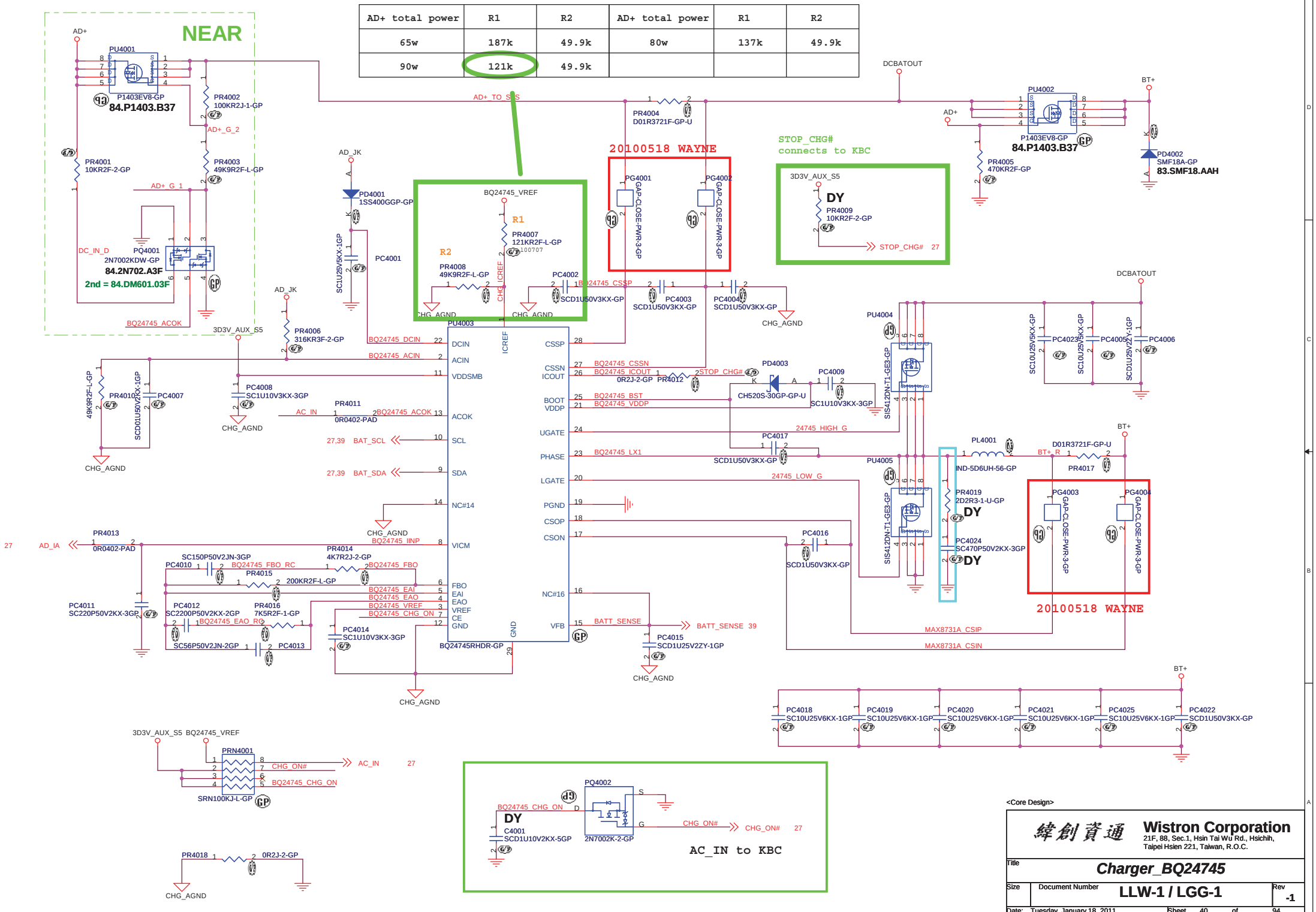

<Core Design>

Wistron Corporation
21F, 88, Sec.1, Hsin Tai Wu Rd., Hsichih,
Taipei Hsien 221, Taiwan, R.O.C.

Title: Charger_BQ24745

Size | Document Number: LLW-1 / LGG-1 | Rev: -1

Date: Tuesday, January 18, 2011 | Sheet 40 of 94

SSID = PWR.Plane.Regulator_5v3p3v

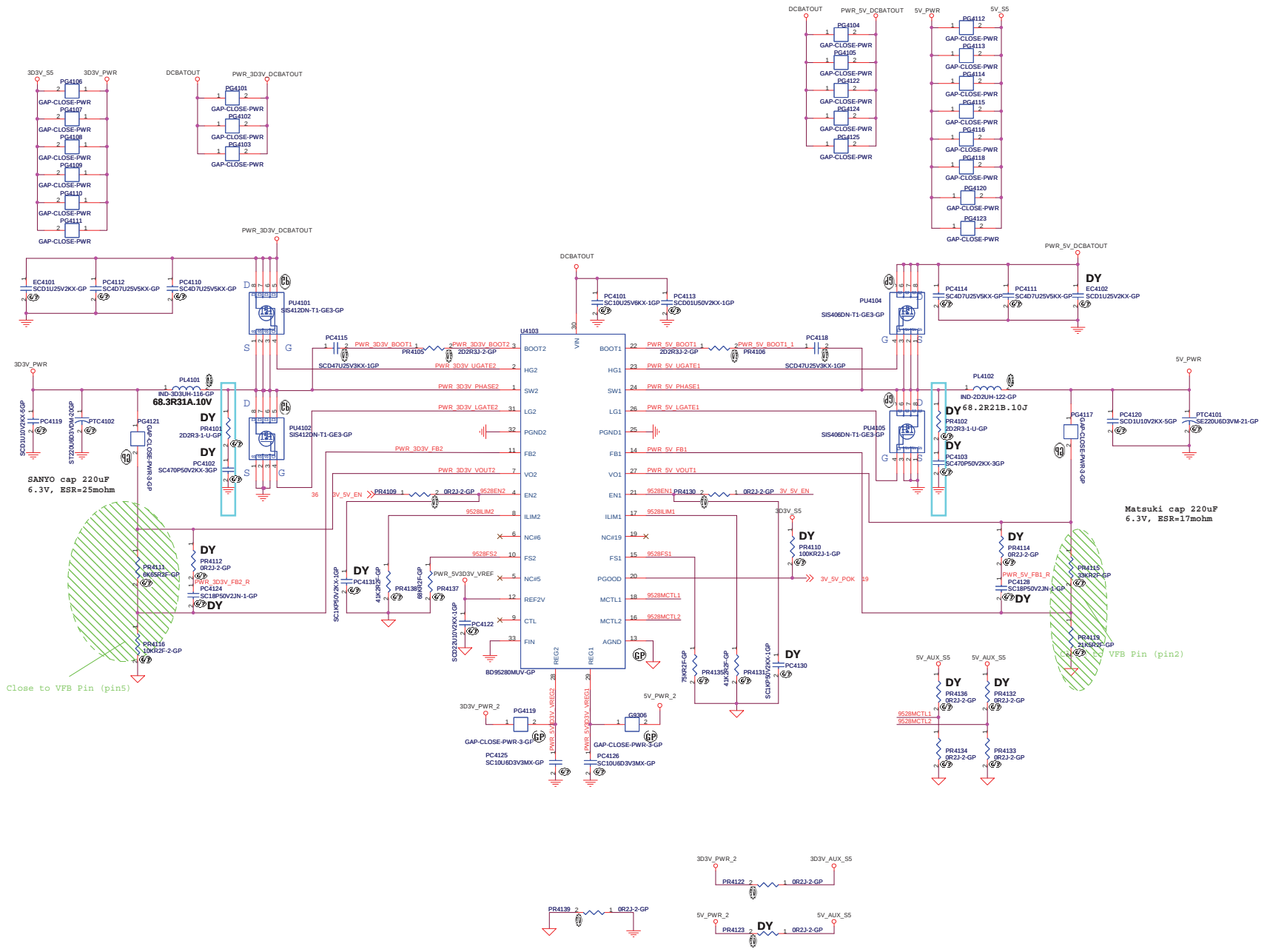

Table 41.1 - POSCAP multi-source

Supplier	Description	Lenovo P/N	Wistron P/N
SANYO	6TPE220MAP	N/A	77.22271.27L
NEC-TOKIN	V0J227M(25)12RE	N/A	77.C2271.00L

<Core Design>

緯創資通 Wistron Corporation
21F, 88, Sec.1, Hsin Tai Wu Rd., Hsichih, Taipei Hsien 221, Taiwan, R.O.C.

Title: DC/DC 3D3V5V

Size | Document Number: LLW-1 / LGG-1 | Rev: -1

Date: Tuesday, January 18, 2011 | Sheet 41 of 94

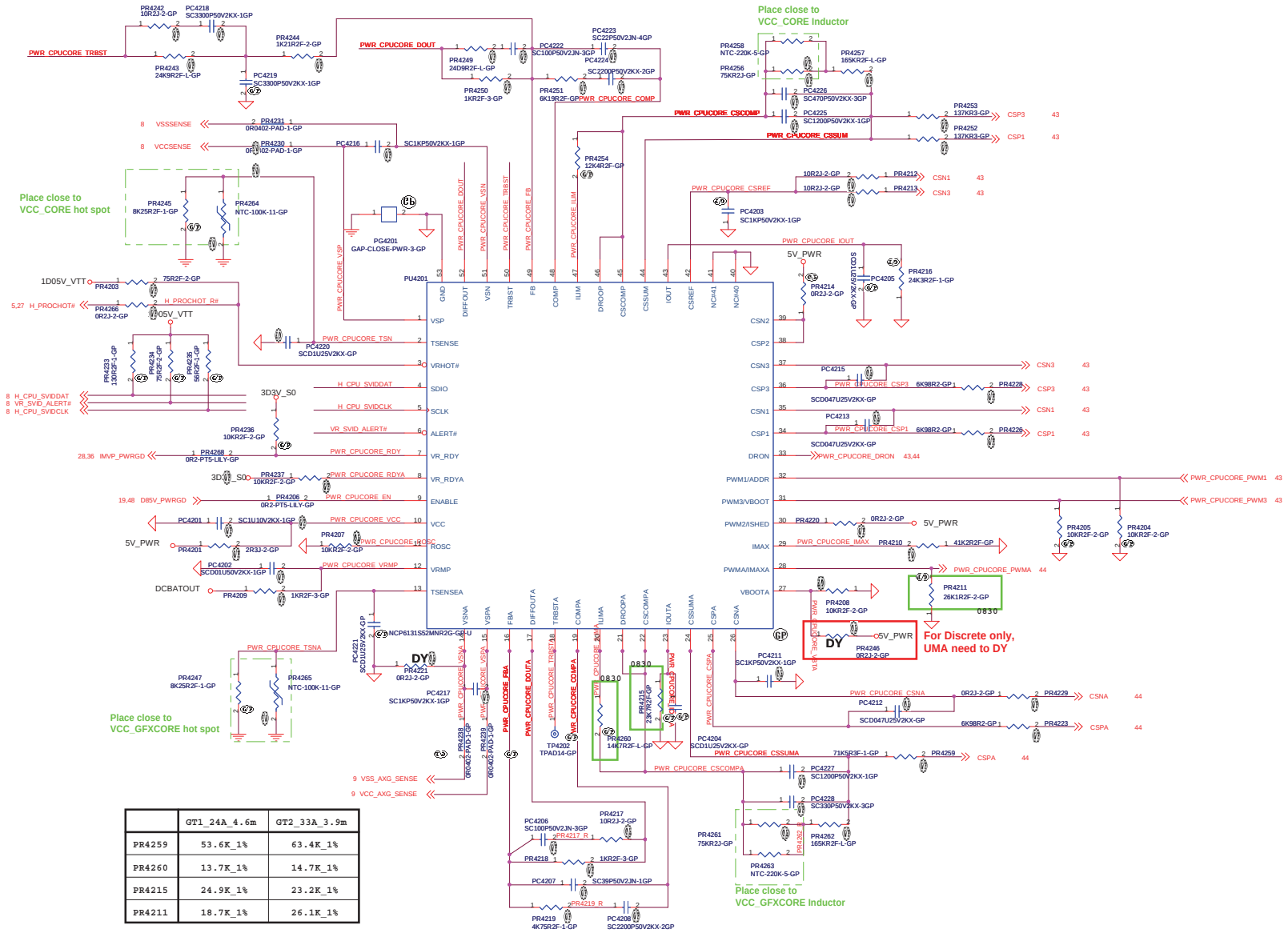

	GT1_24A_4.6m	GT2_33A_3.9m
PR4259	53.6K_1%	63.4K_1%
PR4260	13.7K_1%	14.7K_1%
PR4215	24.9K_1%	23.2K_1%
PR4211	18.7K_1%	26.1K_1%

<Core Design>

緯創資通 **Wistron Corporation**
21F, 88, Sec.1, Hsin Tai Wu Rd., Hsichih,
Taipei Hsien 221, Taiwan, R.O.C.

Title: ***DC/DC CPU CORE1 _NCP6131***

Size | Document Number: **LLW-1 / LGG-1** | Rev: -1

Date: Tuesday, January 18, 2011 | Sheet 42 of 94

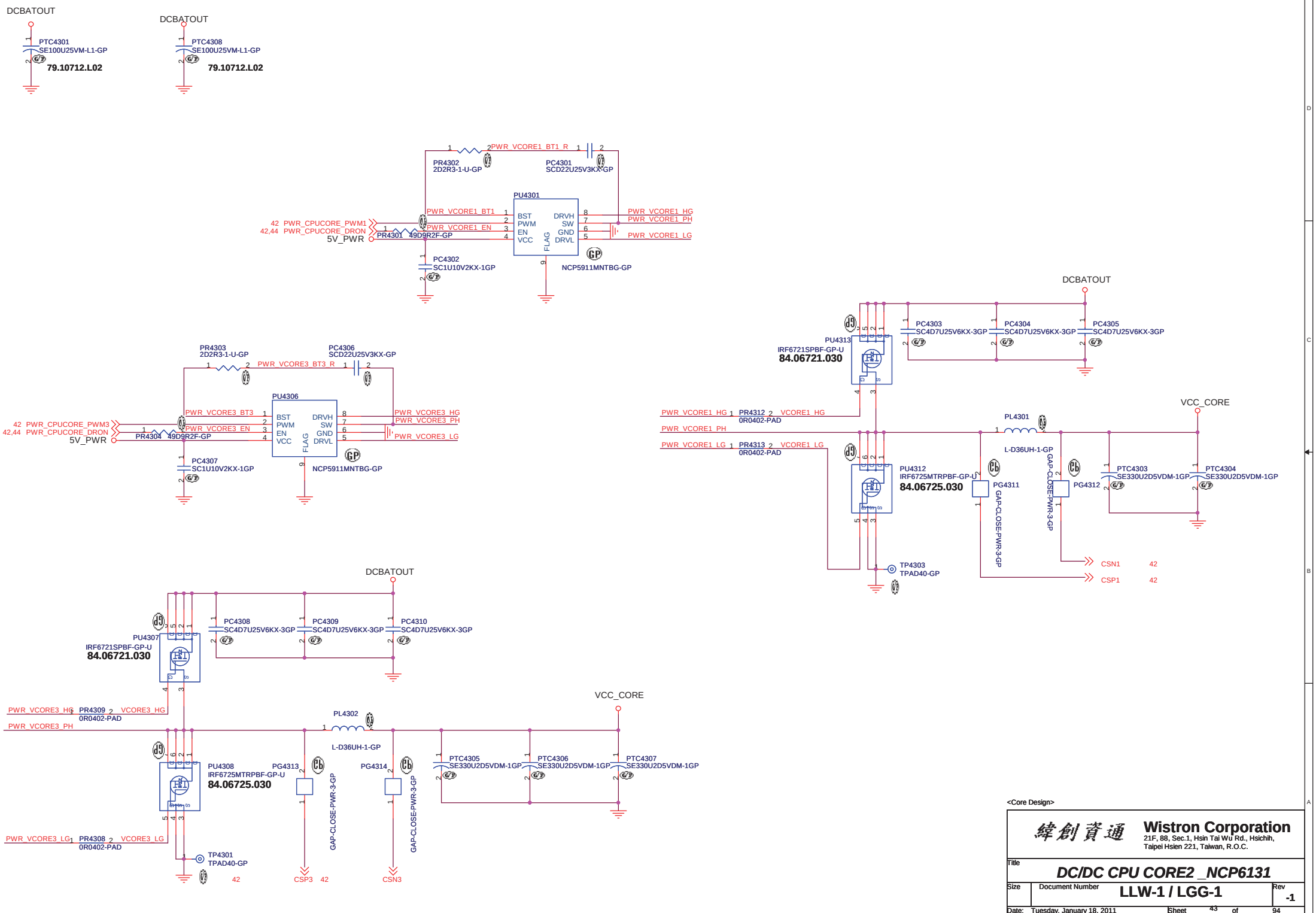

<Core Design>

緯創資通 **Wistron Corporation**
21F, 88, Sec.1, Hsin Tai Wu Rd., Hsichih,
Taipei Hsien 221, Taiwan, R.O.C.

Title: ***DC/DC CPU CORE2 _NCP6131***

Size | Document Number: **LLW-1 / LGG-1** | Rev: **-1**

Date: Tuesday, January 18, 2011 | Sheet 43 of 94

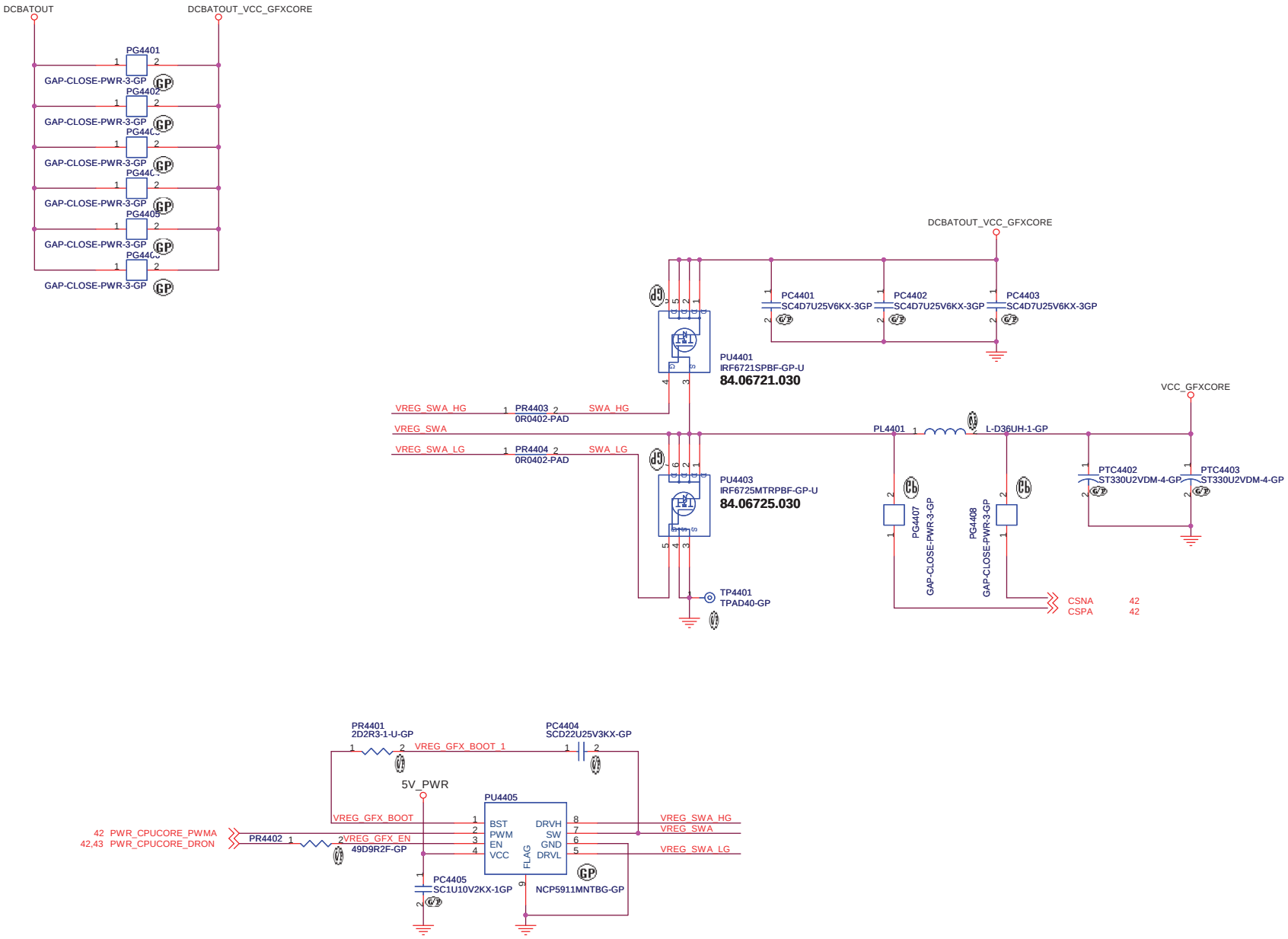

<Core Design>

緯創資通 **Wistron Corporation**
21F, 88, Sec.1, Hsin Tai Wu Rd., Hsichih,
Taipei Hsien 221, Taiwan, R.O.C.

Title: ***DC/DC CPU CORE3 _NCP6131***

Size	Document Number	Rev
	LLW-1 / LGG-1	-1

Date: Tuesday, January 18, 2011 Sheet 44 of 94

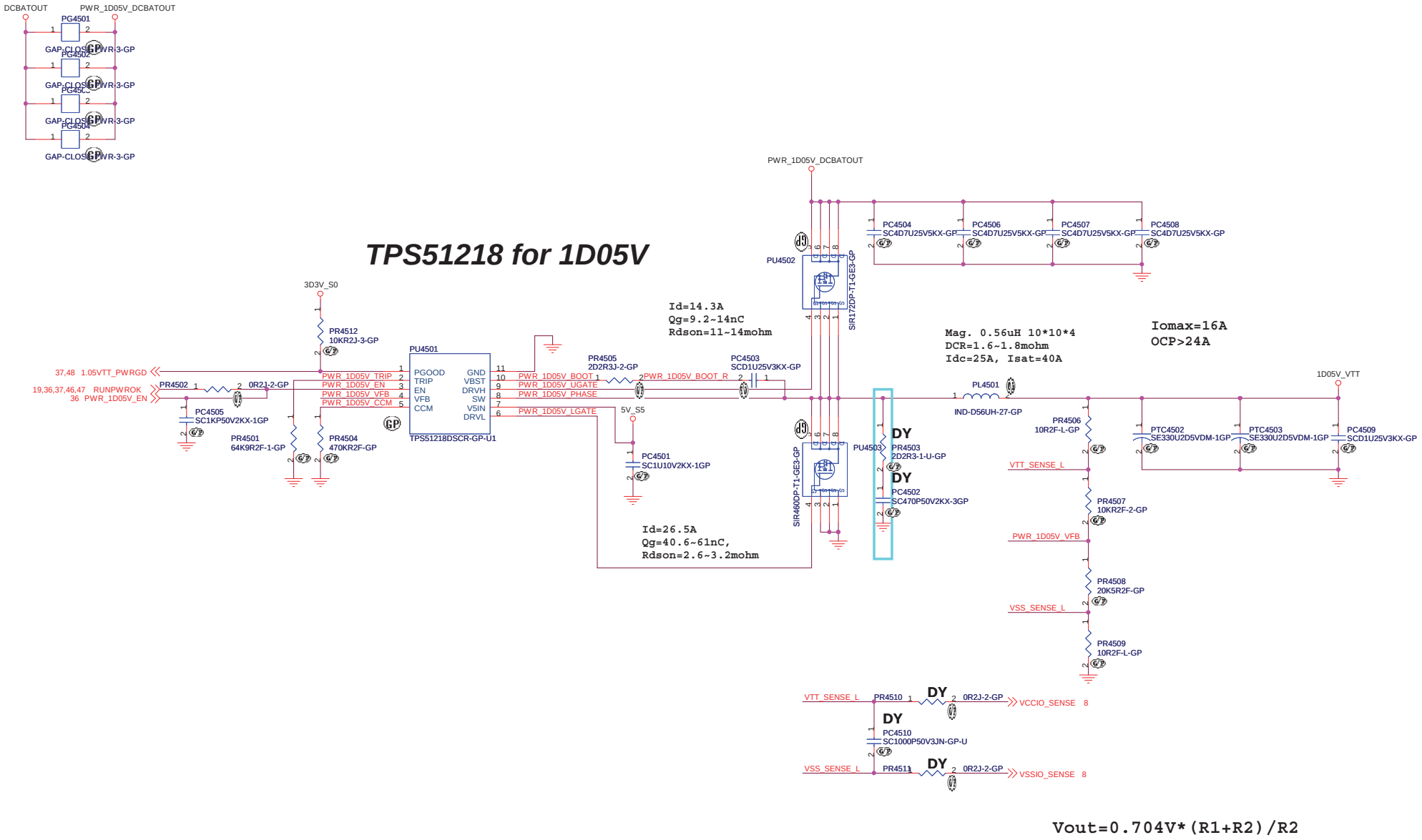

<Core Design>

緯創資通	Wistron Corporation 21F, 88, Sec.1, Hsin Tai Wu Rd., Hsichih, Taipei Hsien 221, Taiwan, R.O.C.	
Title	TPS51218_1D05V	
Size	Document Number LLW-1 / LGG-1	Rev -1
Date: Tuesday, January 18, 2011	Sheet 45 of 94	

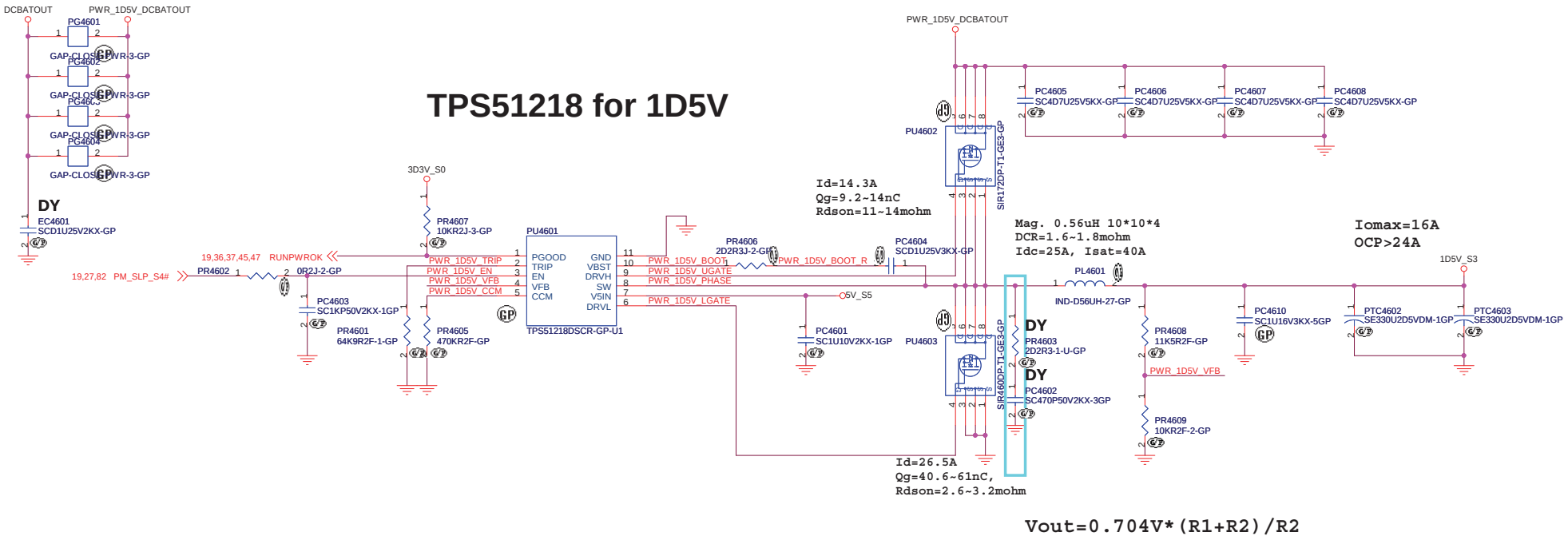

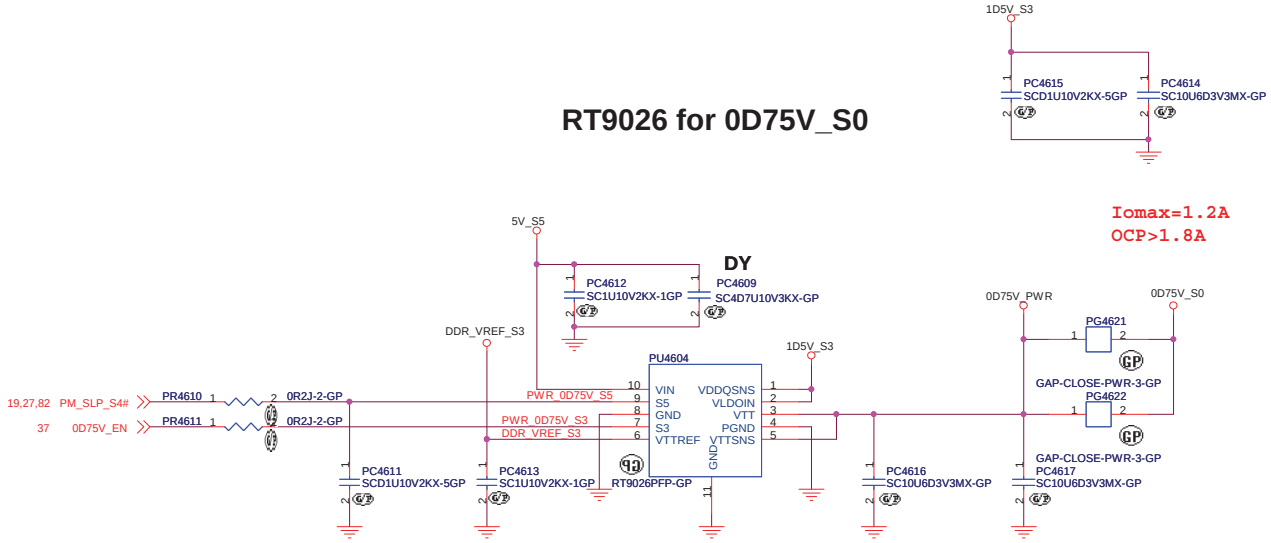

<Core Design>

緯創資通 **Wistron Corporation**
21F, 88, Sec.1, Hsin Tai Wu Rd., Hsichih,
Taipei Hsien 221, Taiwan, R.O.C.

Title		
	TPS51128_1D5V & RT9026_0D75V	
Size	Document Number	Rev
	LLW-1 / LGG-1	-1
Date: Tuesday, January 18, 2011	Sheet 46 of 94	

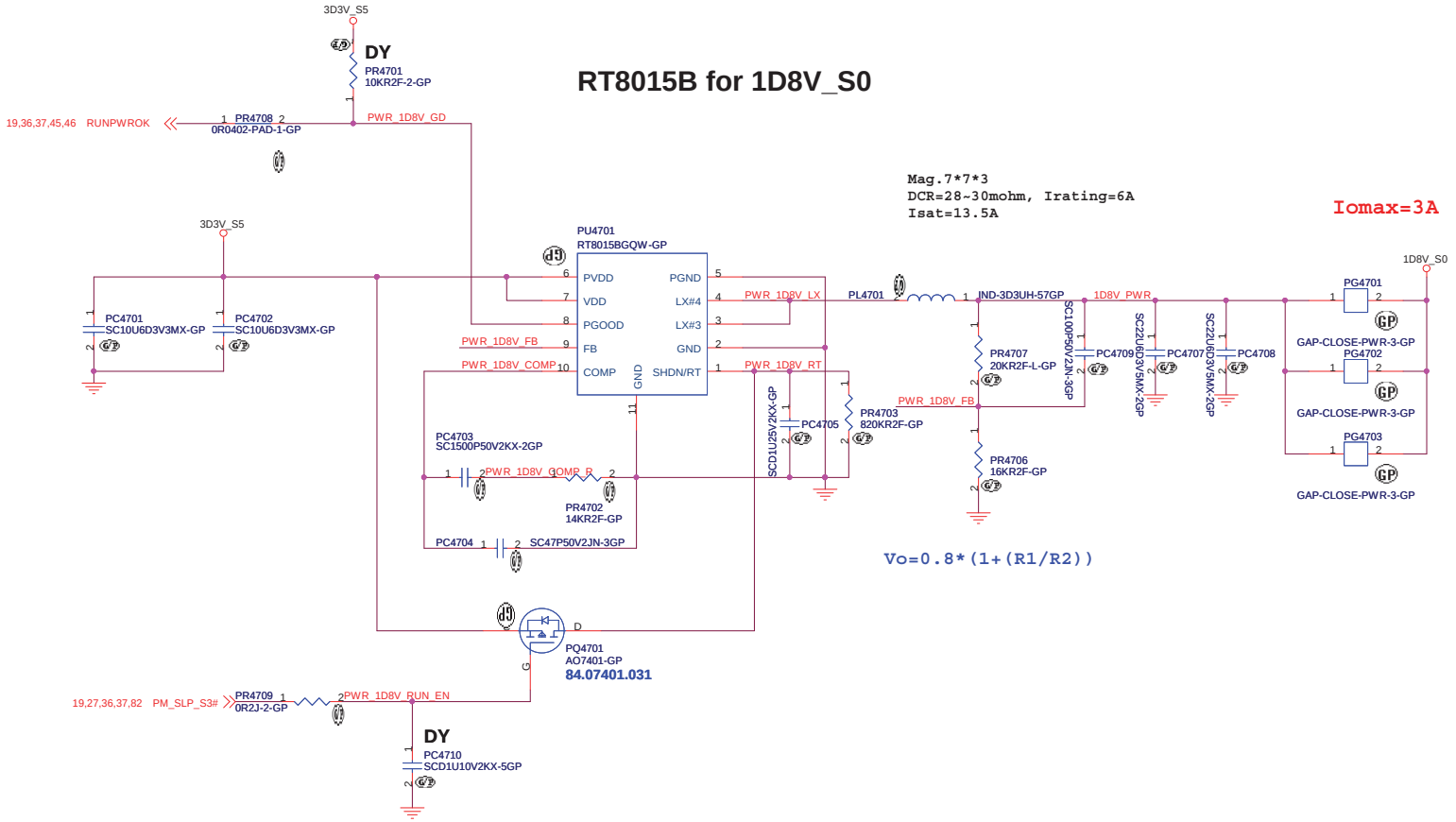

<Core Design>

緯創資通	Wistron Corporation 21F, 88, Sec.1, Hsin Tai Wu Rd., Hsichih, Taipei Hsien 221, Taiwan, R.O.C.		
Title	PWM_1D8V_RT8015B		
Size	Document Number LLW-1 / LGG-1		Rev -1
Date: Tuesday, January 18, 2011	Sheet 47 of 94		

RT8208A for VCCSA

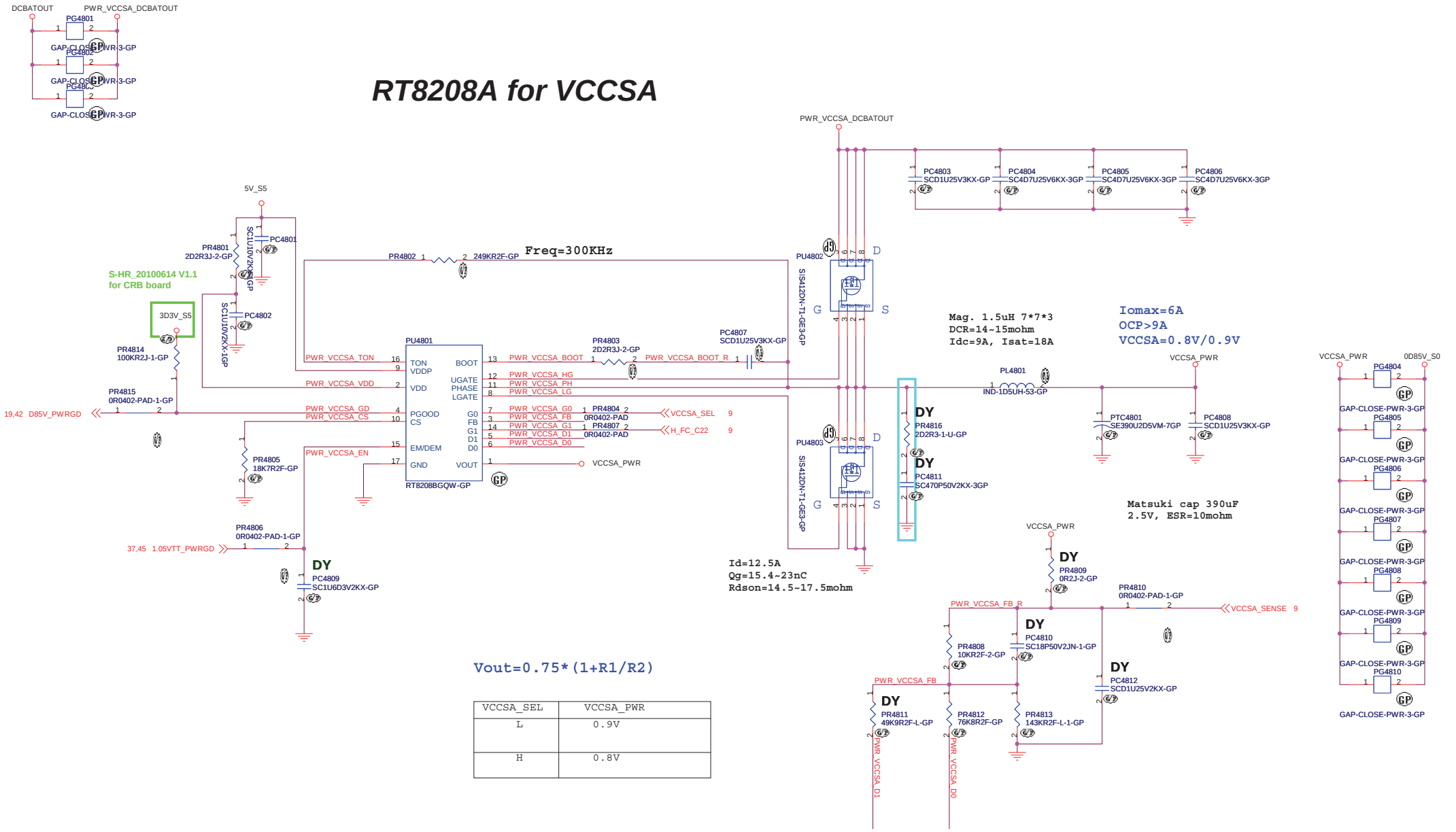

Vout=0.75*(1+R1/R2)

VCCSA_SEL	VCCSA_PWR
L	0.9V
H	0.8V

<Core Design>

緯創資通 **Wistron Corporation**
21F, 88, Sec.1, Hsin Tai Wu Rd., Hsichih,
Taipei Hsien 221, Taiwan, R.O.C.

Title	RT8208B_VCCSA	
Size	Document Number: LLW-1 / LGG-1	Rev -1
Date: Tuesday, January 18, 2011	Sheet 48 of 94	

LCD / Inverter Connector

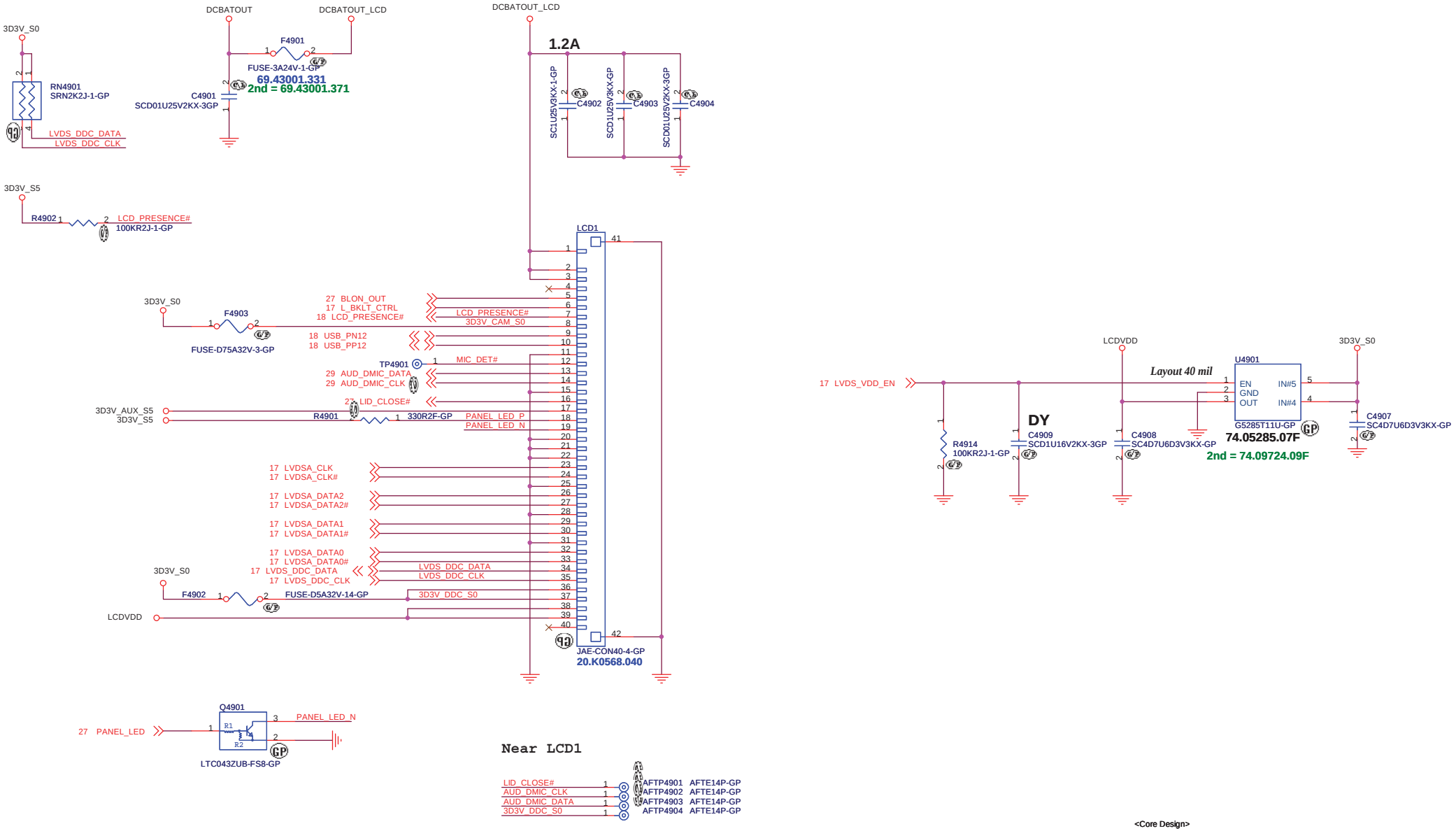

<Core Design>

緯創資通	**Wistron Corporation** 21F, 88, Sec.1, Hsin Tai Wu Rd., Hsichih, Taipei Hsien 221, Taiwan, R.O.C.	
Title	***LCD CONNECTOR***	
Size A3	Document Number **LLW-1 / LGG-1**	Rev -1
Date: Tuesday, January 18, 2011	Sheet 49 of 94	

CRT CONNECTOR

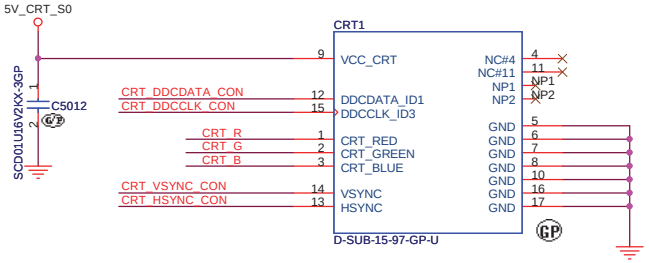

Near CRT1

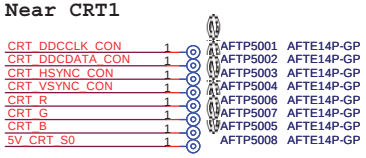

CRT DDCDATA & DDCCLK level shift

Pull High 5V Design on CRT Board

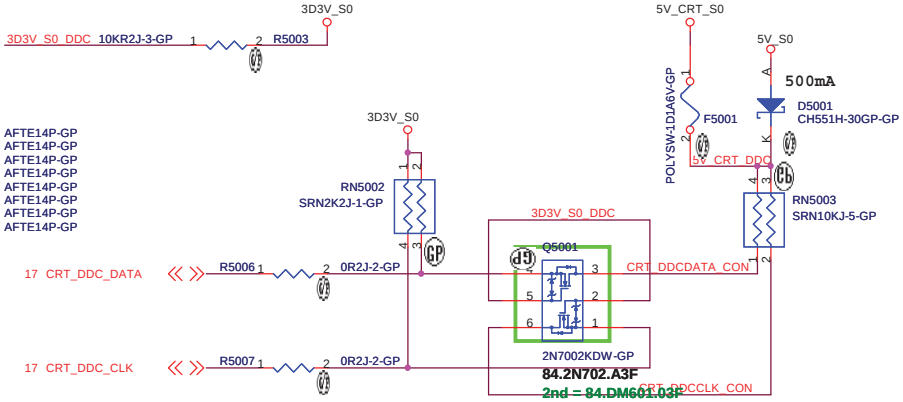

CRT Hsync & Vsync level shift

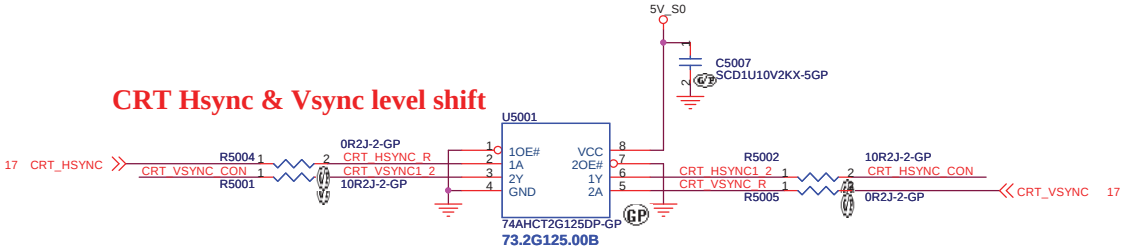

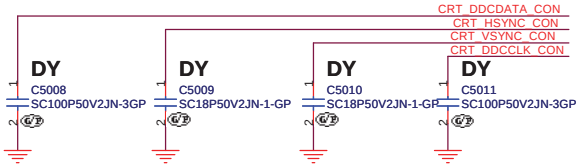

CRT RGB

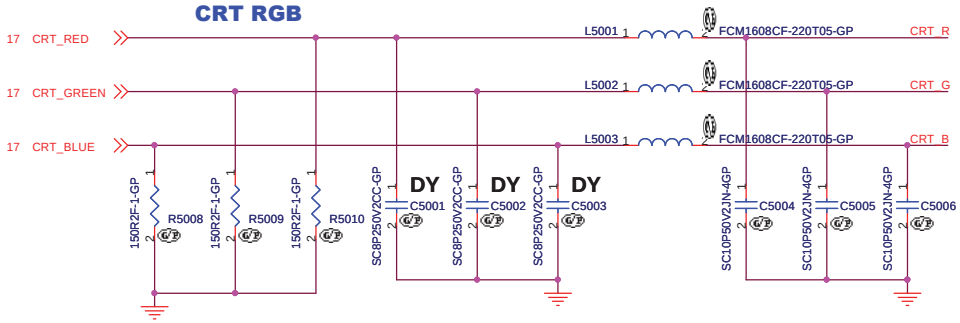

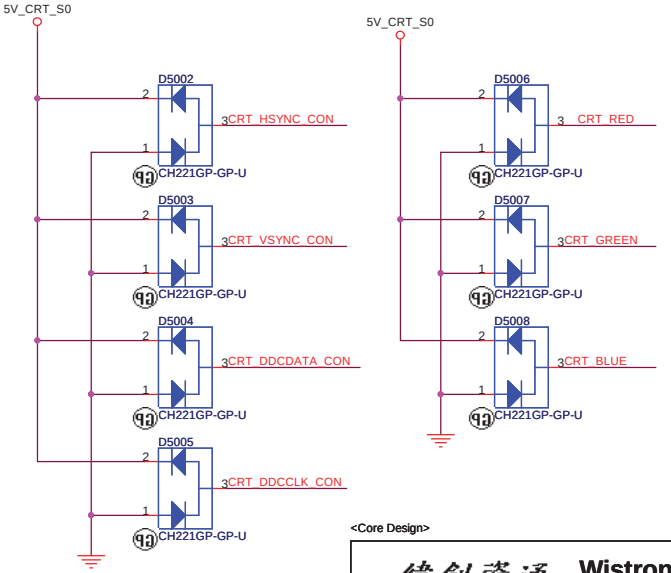

<Core Design>

緯創資通 Wistron Corporation
21F, 88, Sec.1, Hsin Tai Wu Rd., Hsichih,
Taipei Hsien 221, Taiwan, R.O.C.

Title		
CRT Connector		
Size A3	Document Number LLW-1 / LGG-1	Rev -1
Date: Tuesday, January 18, 2011	Sheet 50 of 94	

HDMI Connector

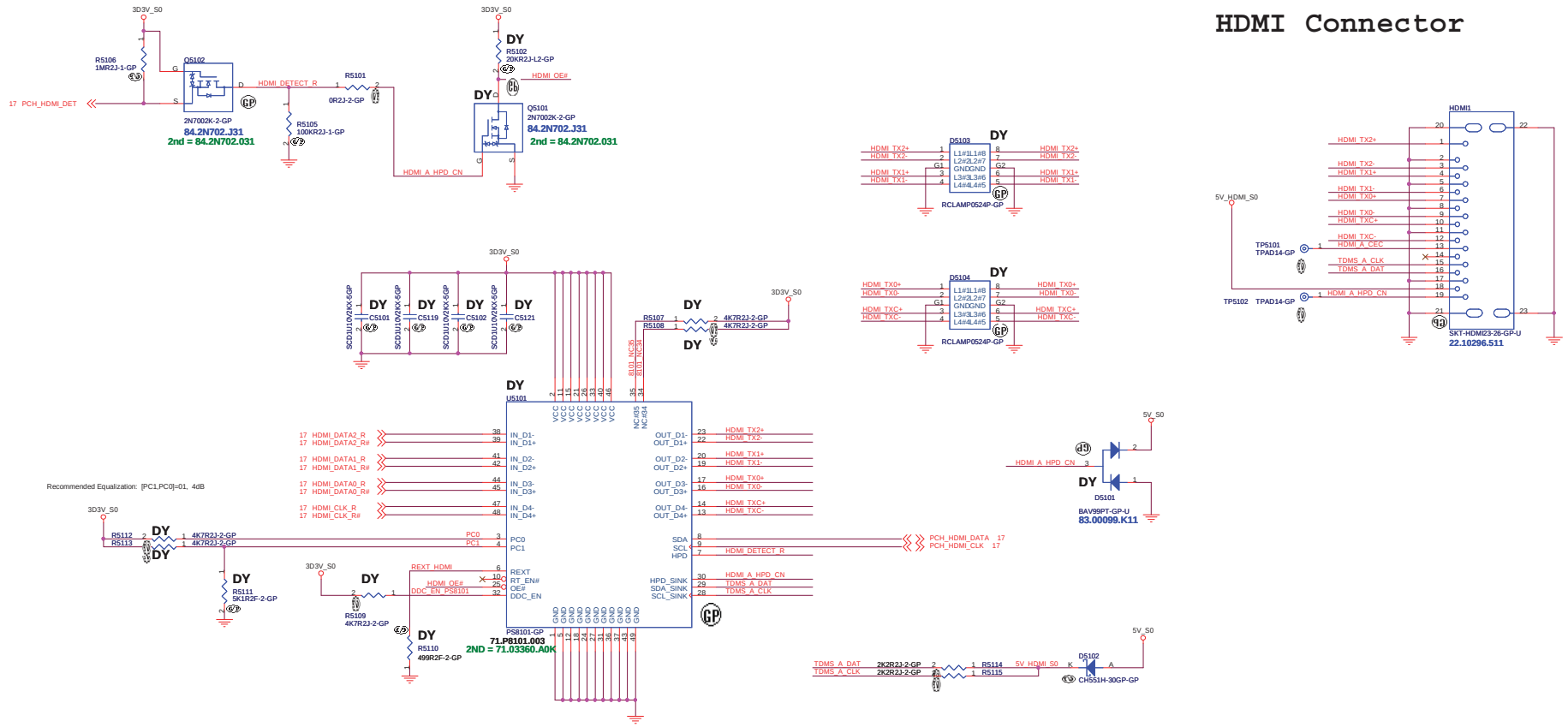

HDMI Passive Level Shifter

Close to HDMI Connector

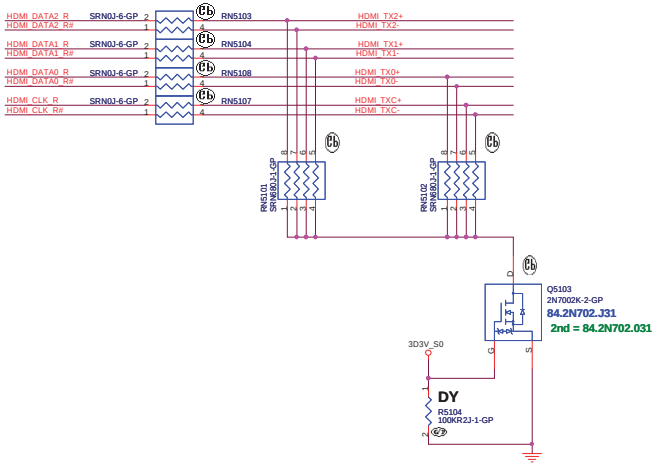

HDMI DDC Passive Level Shifter

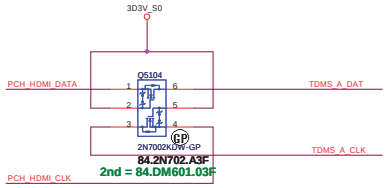

<Core Design>

緯創資通	Wistron Corporation 21F, 88, Sec.1, Hsin Tai Wu Rd., Hsichih, Taipei Hsien 221, Taiwan, R.O.C.	
Title	HDMI	
Size A2	Document Number LLW-1 / LGG-1	Rev -1
Date: Tuesday, January 18, 2011	Sheet 51 of 94	

BLANK

<Core Design>

緯創資通 Wistron Corporation
21F, 88, Sec.1, Hsin Tai Wu Rd., Hsichih,
Taipei Hsien 221, Taiwan, R.O.C.

Title: **DISPLAY PORT CONNECTOR**

Size	Document Number	Rev
A4	LLW-1 / LGG-1	-1

Date: Tuesday, January 18, 2011 Sheet 52 of 94

BLANK

<Core Design>

緯創資通 Wistron Corporation
21F, 88, Sec.1, Hsin Tai Wu Rd., Hsichih,
Taipei Hsien 221, Taiwan, R.O.C.

Title	***BLANK***	
Size A4	Document Number **LLW-1 / LGG-1**	Rev **-1**
Date: Tuesday, January 18, 2011	Sheet 53 of 94	

BLANK

<Core Design>

緯創資通 Wistron Corporation
21F, 88, Sec.1, Hsin Tai Wu Rd., Hsichih,
Taipei Hsien 221, Taiwan, R.O.C.

Title	BLANK	
Size A4	Document Number LLW-1 / LGG-1	Rev -1
Date: Tuesday, January 18, 2011	Sheet 54 of 94	

<Core Design>

緯創資通

Wistron Corporation
21F, 88, Sec.1, Hsin Tai Wu Rd., Hsichih,
Taipei Hsien 221, Taiwan, R.O.C.

Title

FAN CONTROL

Size	Document Number	Rev
A4	**LLW-1 / LGG-1**	-1

Date: Tuesday, January 18, 2011 Sheet 55 of 94

HDD Connector

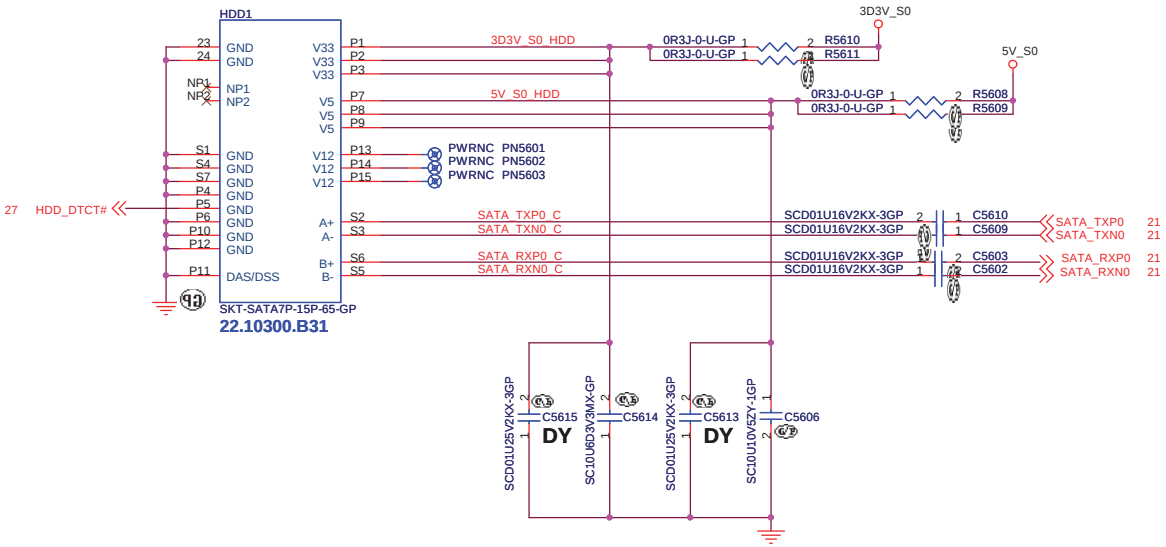

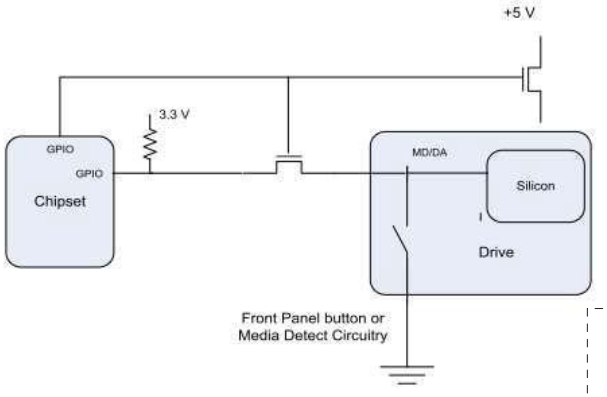

ODD Connector

SATA_RX- and SATA_RX+ Trace
Length match within 20 mil

Mars:
Exchange ODD and ESATA differential pair each other.

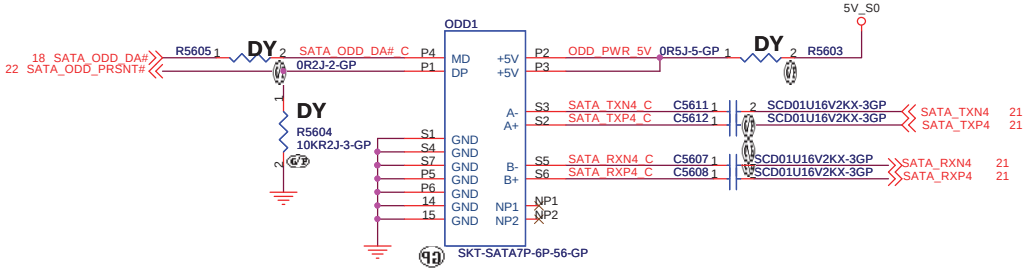

When the drive is powered on, the FET to the MD/DA pin drive is OFF.
When the drive is powered off, the FET to the MD/DA pin is ON

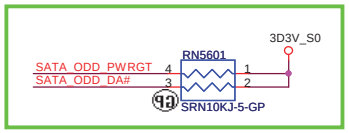

SUPPORT ZERO SATA ODD

20100926 V2.2

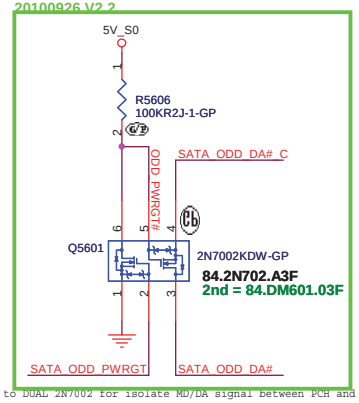

SATA Zero Power ODD

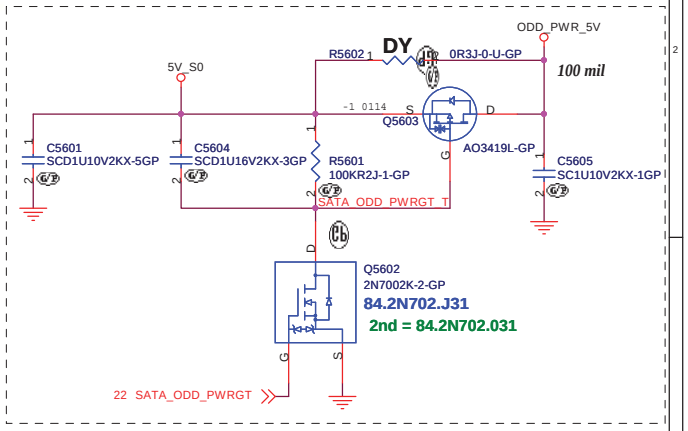

0707 Modify:
Change Q5601 to DUAL 2N7002 for isolate MD/DA signal between PCH and ODD.

<Core Design>

緯創資通	Wistron Corporation 21F, 88, Sec.1, Hsin Tai Wu Rd., Hsichih, Taipei Hsien 221, Taiwan, R.O.C.	
Title	SATA HDD	
Size A3	Document Number LLW-1 / LGG-1	Rev -1
Date: Tuesday, January 18, 2011	Sheet 56 of 94	

ESATA Connector

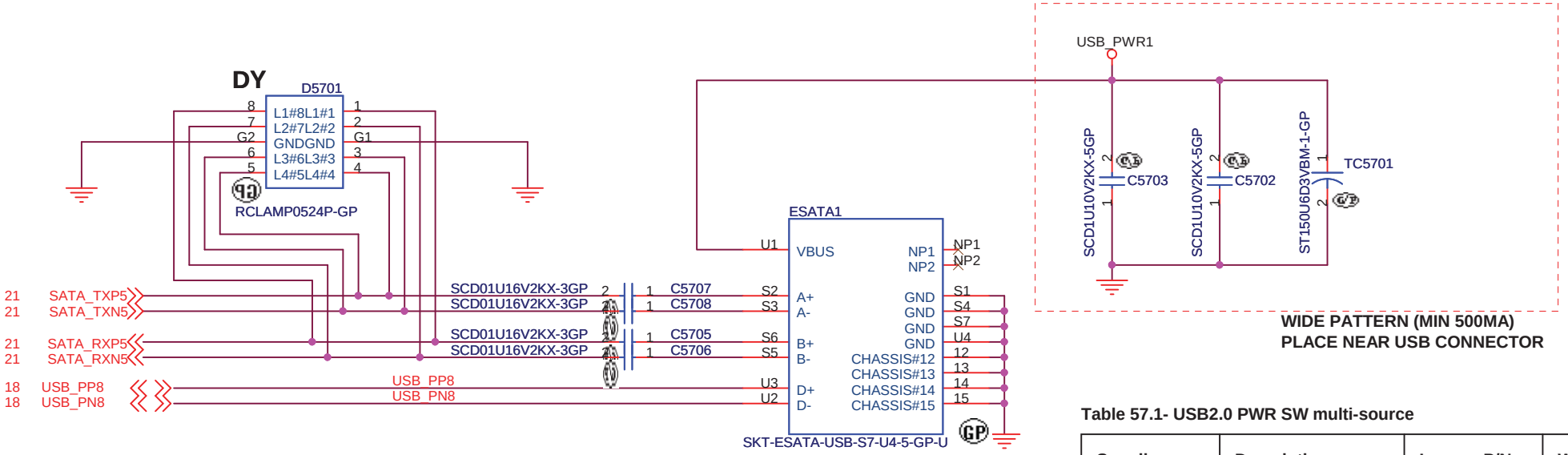

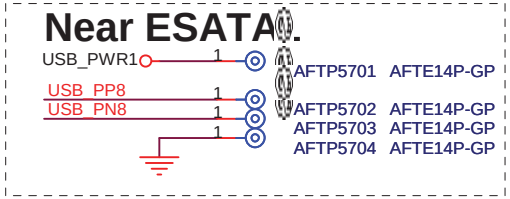

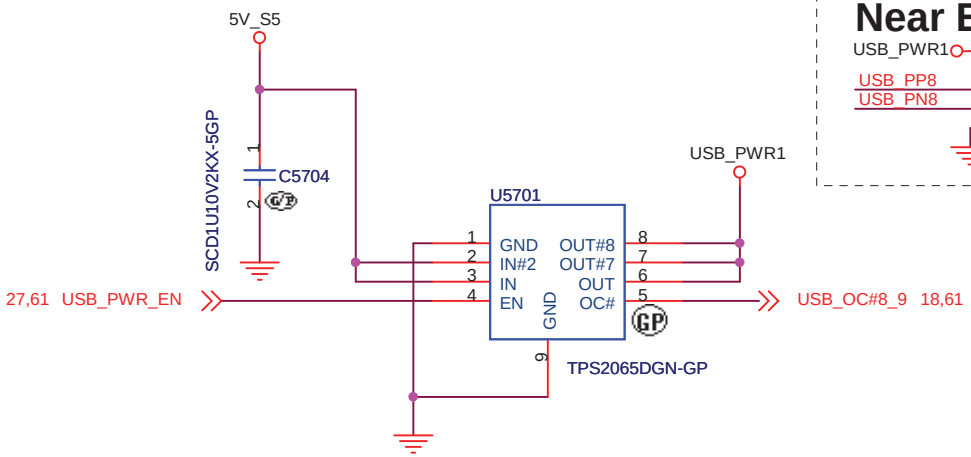

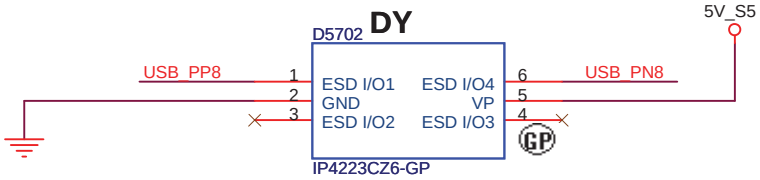

Table 57.1- USB2.0 PWR SW multi-source

Supplier	Description	Lenovo P/N	Wistron P/N
TI	TPS2065DGN4	54Y9024BA	74.02065.079
ROHM	BD8012FVJ	54Y9024AA	74.08012.07G

Table 57.2- 150U 6.3V POSCAP multi-source

Supplier	Description	Lenovo P/N	Wistron P/N
NEC-TOKIN	TEPSLB20J157M	N/A	77.C1571.09L
SANYO	6TPE150MAZB	N/A	77.21571.111
HPC	TNCB0J157MTRZTF	N/A	80.15715.12L

<Core Design>

緯創資通 **Wistron Corporation**
21F, 88, Sec.1, Hsin Tai Wu Rd., Hsichih,
Taipei Hsien 221, Taiwan, R.O.C.

Title: ***ESATA CONNECTOR***

Size: A4 | Document Number: **LLW-1 / LGG-1** | Rev: **-1**

Date: Tuesday, January 18, 2011 | Sheet 57 of 94

NEAR HEADPHONE CONN

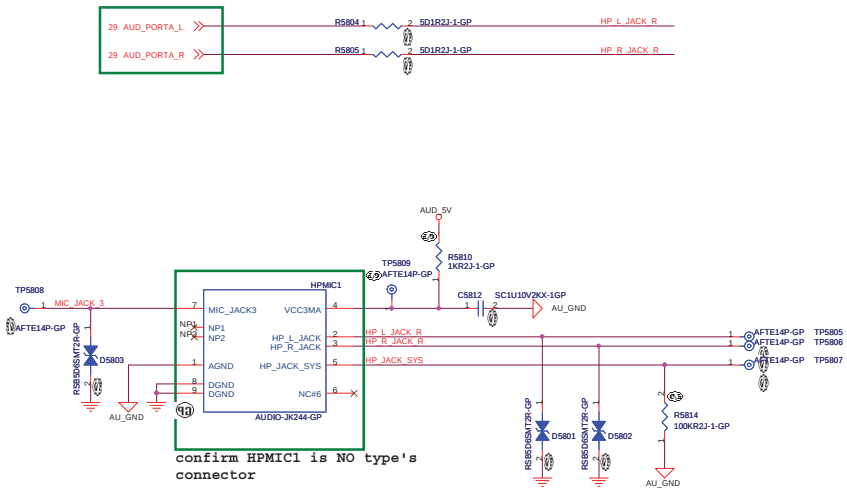

JACK SENSE

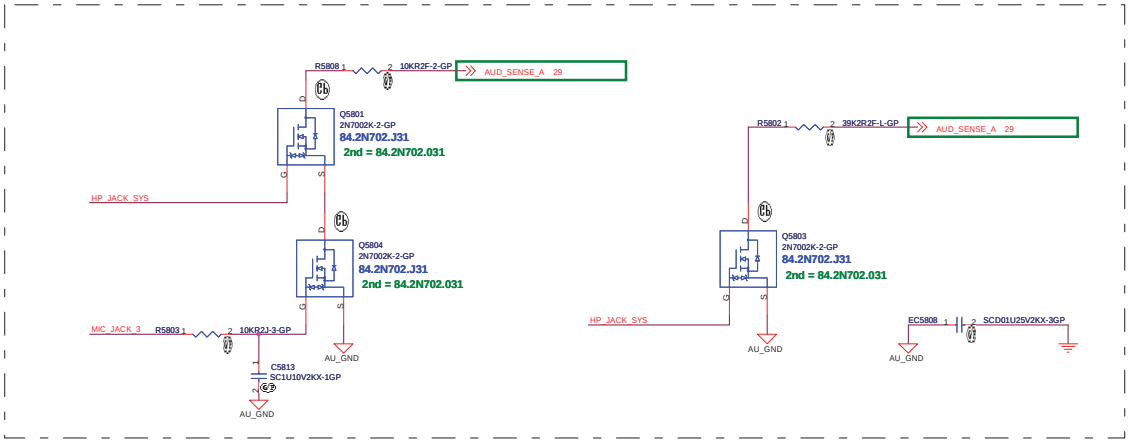

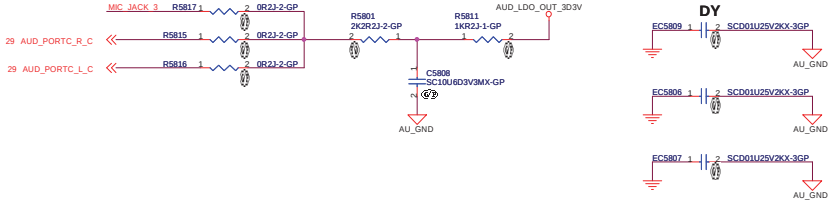

DY

INTERNAL STEREO SPEAKERS

Port G

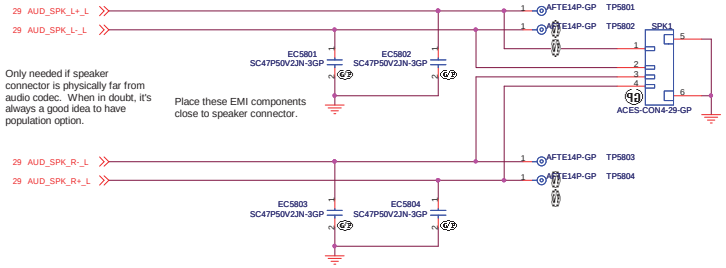

Table 58.1 - Bi-direction ESD multi-source

Supplier	Description	Lenovo P/N	Wistron P/N
ROHM	RSB5.6SMT2R	N/A	83.RSB56.BAF
ON SEMI	ESD5B5.0ST1G	N/A	83.ESD5B.0AF
NXP	PESD5V0S1BB	N/A	83.0005V.0AF

<Core Design>

緯創資通 **Wistron Corporation**
21F, 88, Sec.1, Hsin Tai Wu Rd., Hsichih, Taipei Hsien 221, Taiwan, R.O.C.

Title: **Audio Jack**

Size	Document Number	Rev
A2	LLW-1 / LGG-1	-1

Date: Tuesday, January 18, 2011 Sheet 58 of 94

<Core Design>

緯創資通 **Wistron Corporation**
21F, 88, Sec.1, Hsin Tai Wu Rd., Hsichih,
Taipei Hsien 221, Taiwan, R.O.C.

Title		
	BLANK	
Size A3	Document Number **LLW-1 / LGG-1**	Rev **-1**
Date: Tuesday, January 18, 2011	Sheet 59 of 94	

SSID = Flash.ROM

SPI FLASH ROM (4M byte) for PCH

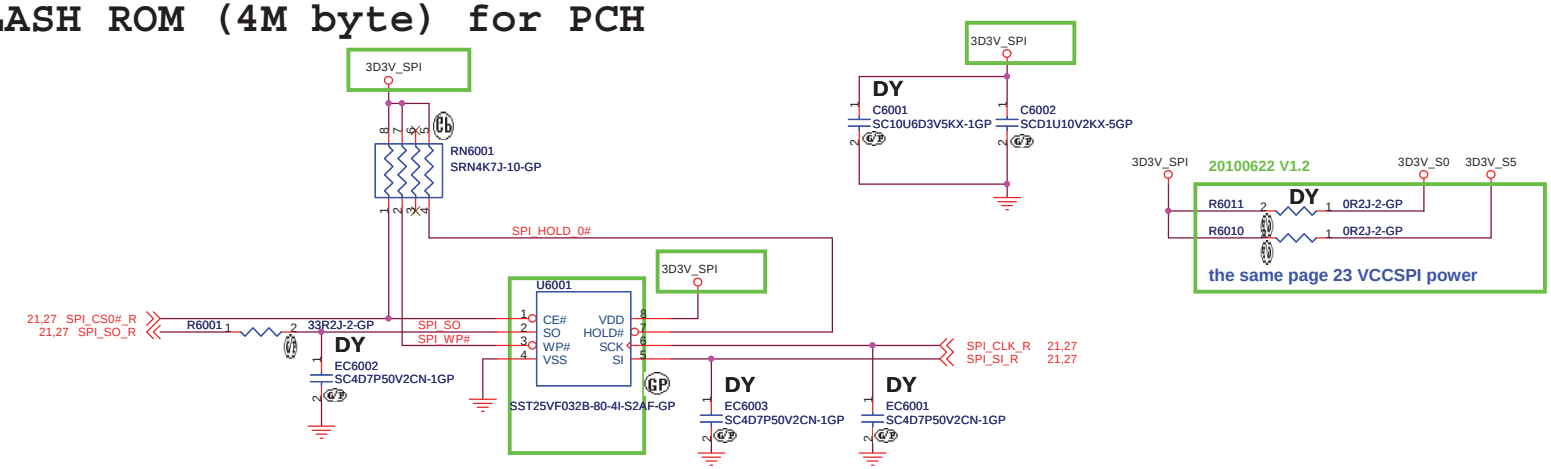

Table 60.1- SPI Serial Flash Memory multi-source

Supplier	Description	Lenovo P/N	Wistron P/N
MXIC	MX25L3206EM2I-12G	N/A	72.25320.C01
WINBOND	W25Q32BVSSIG	N/A	72.25Q32.A01
NUMONYX	M25PX32-VMW6F	N/A	72.25P32.C01

SSID = RBATT

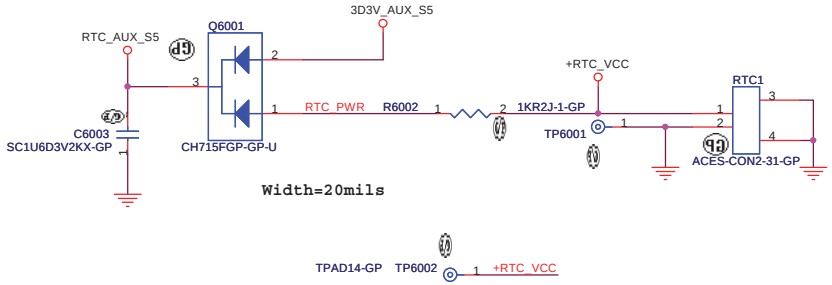

Table 60.2 - Schottky Barrier Diode multi-source

Supplier	Description	Lenovo P/N	Wistron P/N
CHENMKO	CH715FGP	N/A	83.R0304.D81
CHENMKO	BAS40CWGP	N/A	83.00040.R81
PANJIT	BAS40CW	N/A	83.00040.E81

<Core Design>

緯創資通 Wistron Corporation
21F, 88, Sec.1, Hsin Tai Wu Rd., Hsichih,
Taipei Hsien 221, Taiwan, R.O.C.

Title: Flash/RTC

Size: A3 | Document Number: LLW-1 / LGG-1 | Rev: -1

Date: Tuesday, January 18, 2011 | Sheet 60 of 94

USB Connector

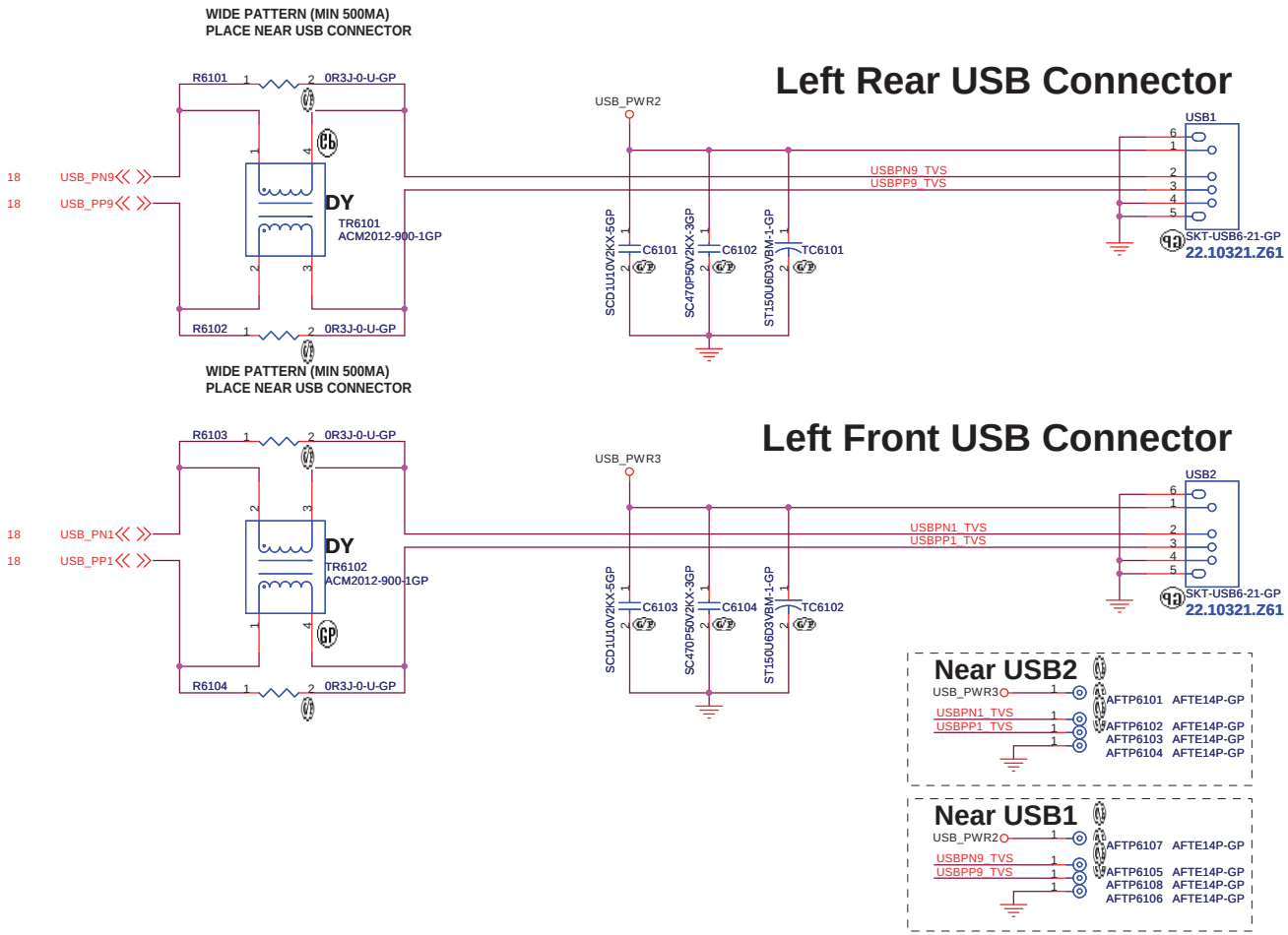

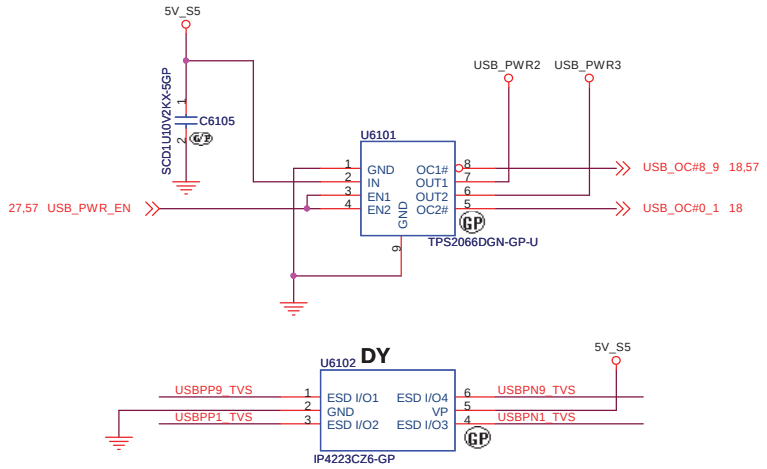

Table 61.1- USB2.0 PWR SW multi-source

Supplier	Description	Lenovo P/N	Wistron P/N
TI	TPS2066DGN	41R0511AA	74.02066.A71
TI	TPS2066DGN-1	N/A	74.02066.B71

Table 61.2- 150U 6.3V POSCAP multi-source

Supplier	Description	Lenovo P/N	Wistron P/N
NEC-TOKIN	TEPSLB20J157M	N/A	77.C1571.09L
SANYO	6TPE150MAZB	N/A	77.21571.111
HPC	TNCB0J157MTRZTF	N/A	80.15715.12L

BLANK

<Core Design>

緯創資通 Wistron Corporation
21F, 88, Sec.1, Hsin Tai Wu Rd., Hsichih,
Taipei Hsien 221, Taiwan, R.O.C.

Title		
	BLANK	
Size A4	Document Number **LLW-1 / LGG-1**	Rev **-1**
Date: Tuesday, January 18, 2011	Sheet 62 of 94	

Bluetooth Connector

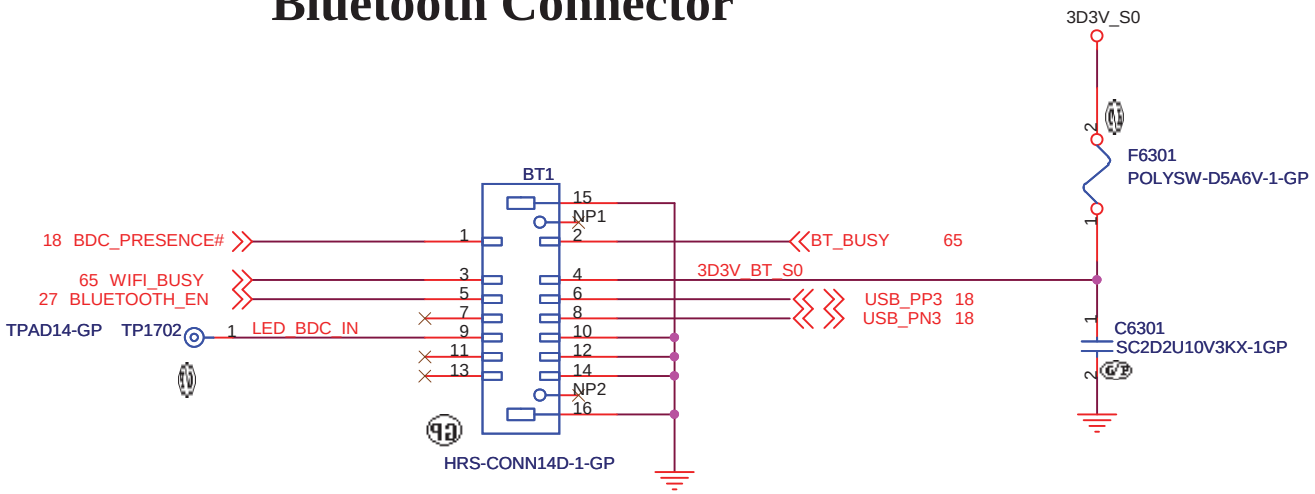

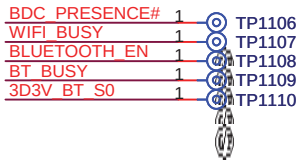

<Core Design>

緯創資通 **Wistron Corporation**
21F, 88, Sec.1, Hsin Tai Wu Rd., Hsichih,
Taipei Hsien 221, Taiwan, R.O.C.

Title	***Bluetooth***	
Size A4	Document Number **LLW-1 / LGG-1**	Rev **-1**
Date: Tuesday, January 18, 2011	Sheet 63 of 94	

BLANK

<Core Design>

緯創資通 Wistron Corporation
21F, 88, Sec.1, Hsin Tai Wu Rd., Hsichih,
Taipei Hsien 221, Taiwan, R.O.C.

Title	FingerPrint	
Size A4	Document Number LLW-1 / LGG-1	Rev -1
Date: Tuesday, January 18, 2011	Sheet 64 of 94	

HALF MINI CARD FOR WLAN

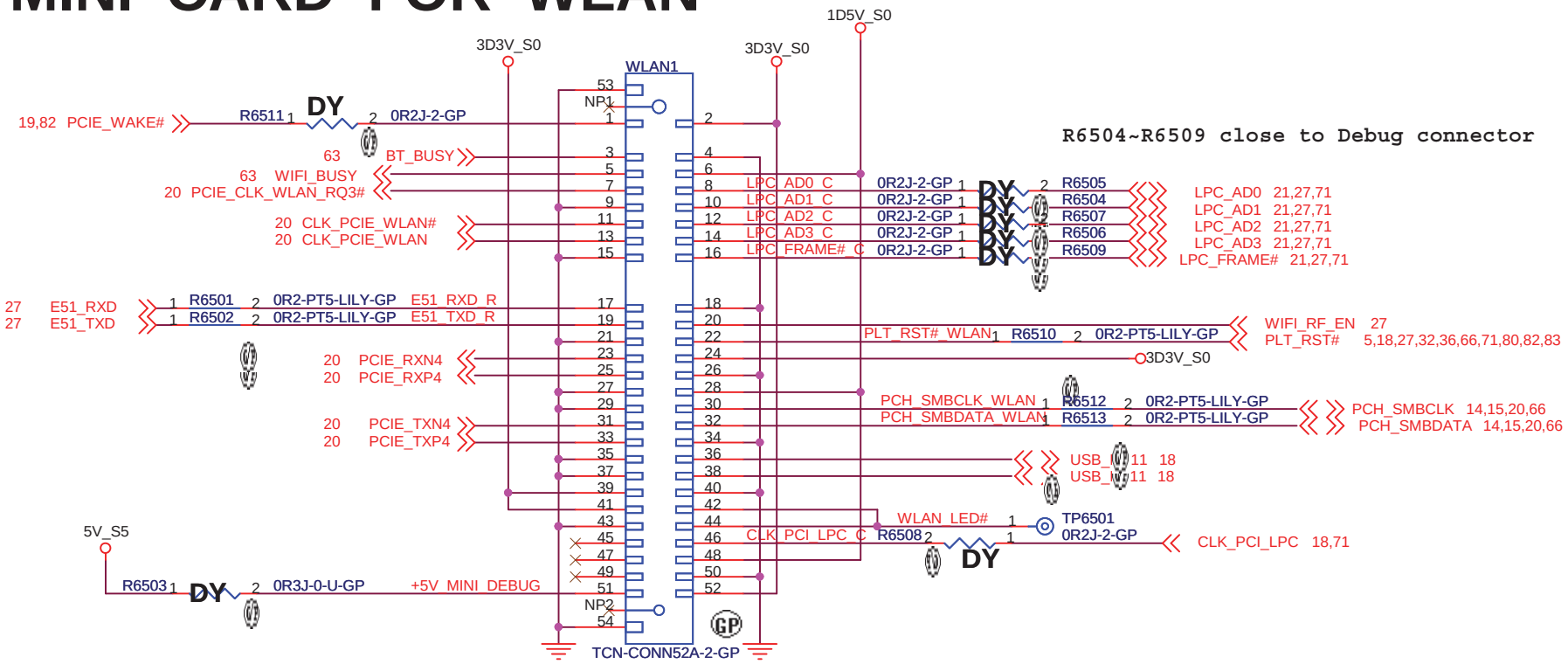

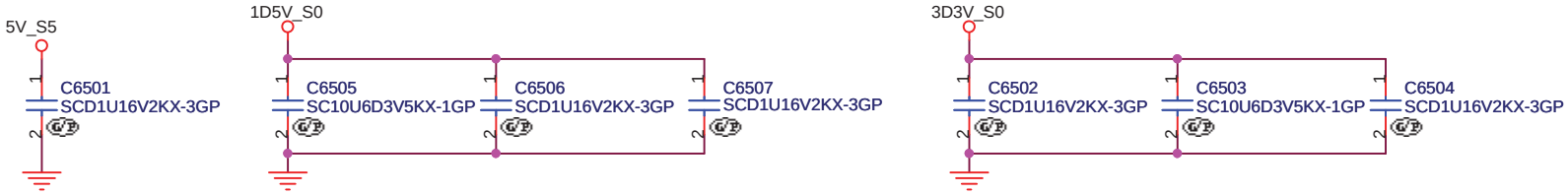

<Core Design>

緯創資通 Wistron Corporation
21F, 88, Sec.1, Hsin Tai Wu Rd., Hsichih,
Taipei Hsien 221, Taiwan, R.O.C.

Title		
MINI CARD SLOT 1		
Size A4	Document Number LLW-1 / LGG-1	Rev -1
Date: Tuesday, January 18, 2011	Sheet 65 of 94	

Mini Card Connector(WWAN)

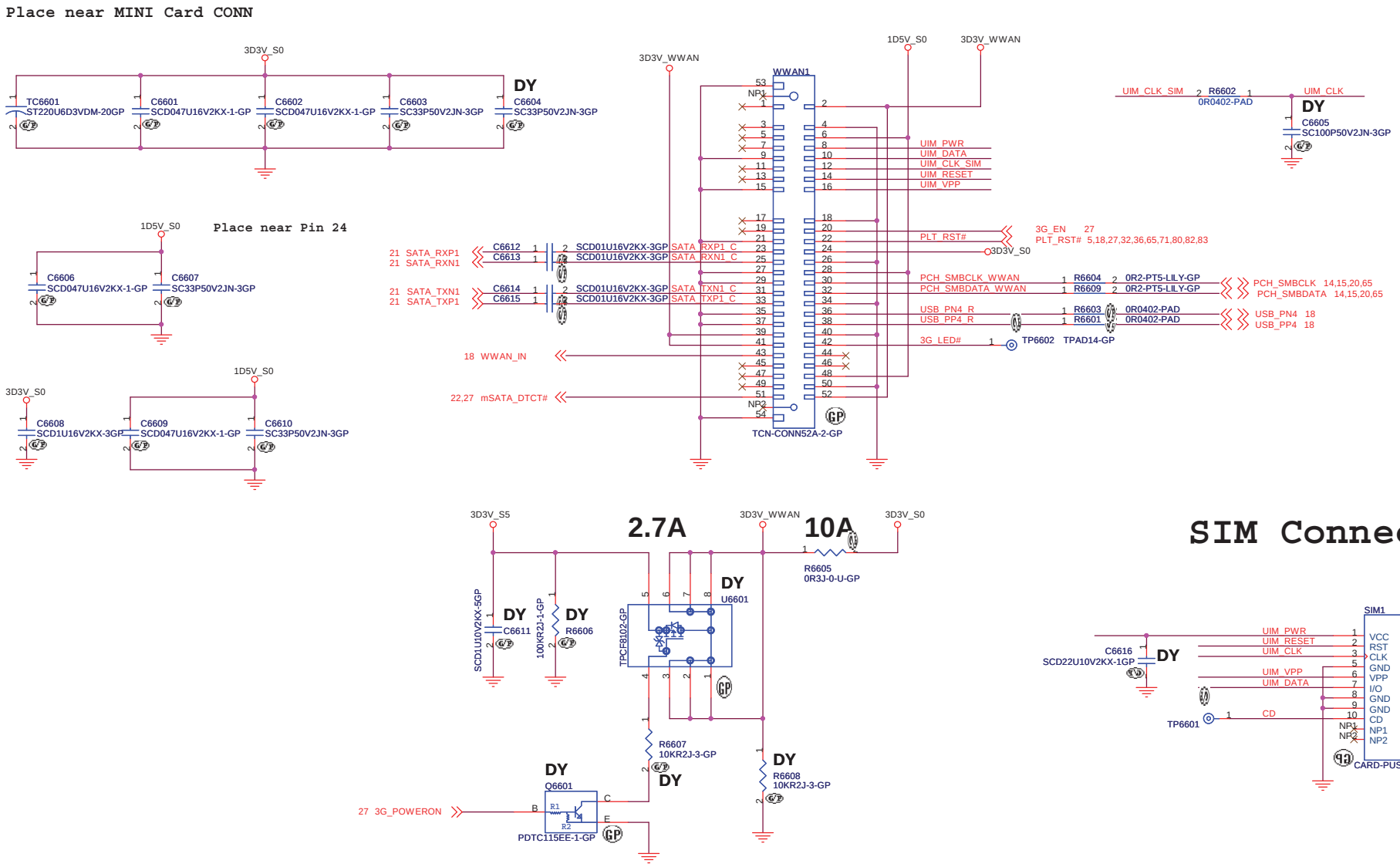

<Core Design>

緯創資通	Wistron Corporation 21F, 88, Sec.1, Hsin Tai Wu Rd., Hsichih, Taipei Hsien 221, Taiwan, R.O.C.	
Title	MINI CARD SLOT 2	
Size A3	Document Number LLW-1 / LGG-1	Rev -1
Date: Tuesday, January 18, 2011	Sheet 66 of 94	

BLANK

<Core Design>

緯創資通 Wistron Corporation
21F, 88, Sec.1, Hsin Tai Wu Rd., Hsichih,
Taipei Hsien 221, Taiwan, R.O.C.

Title		
	BLANK	
Size A4	Document Number **LLW-1 / LGG-1**	Rev **-1**
Date: Tuesday, January 18, 2011	Sheet 67 of 94	

BLANK

<Core Design>

緯創資通 Wistron Corporation
21F, 88, Sec.1, Hsin Tai Wu Rd., Hsichih,
Taipei Hsien 221, Taiwan, R.O.C.

Title		
	BLANK	
Size A4	Document Number **LLW-1 / LGG-1**	Rev **-1**
Date: Tuesday, January 18, 2011	Sheet 68 of 94	

Touch Pad Connector

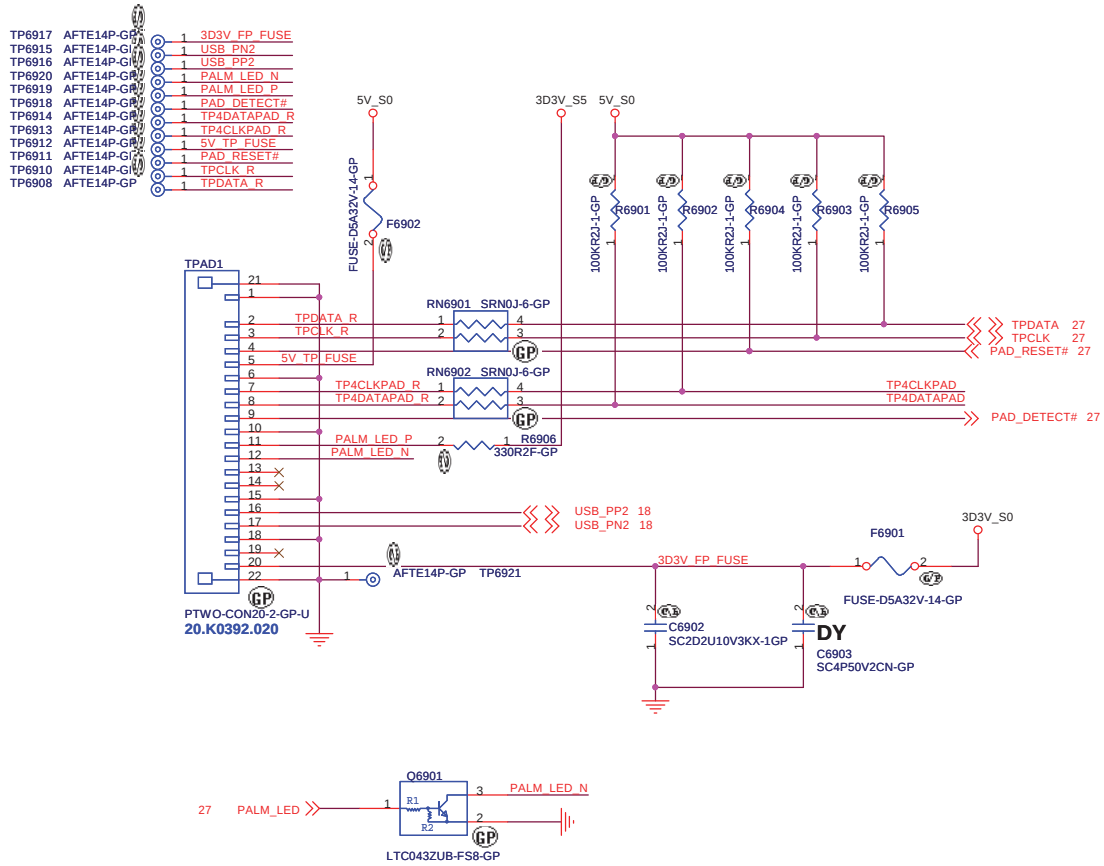

Table 69.1- Transistor multi-source

Supplier	Description	Lenovo P/N	Wistron P/N
NXP	PDTC143ZU	N/A	84.00143.E1K
ROHM	LTC043ZUB	N/A	84.00043.011
Panasonic	DRC5143Z0L	N/A	84.05143.011

Track Point Connector

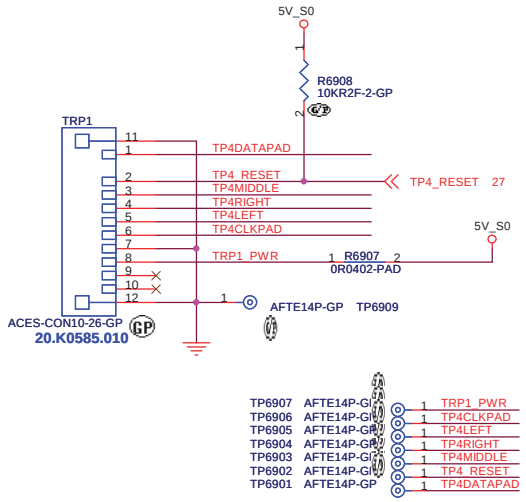

KeyBoard Connector

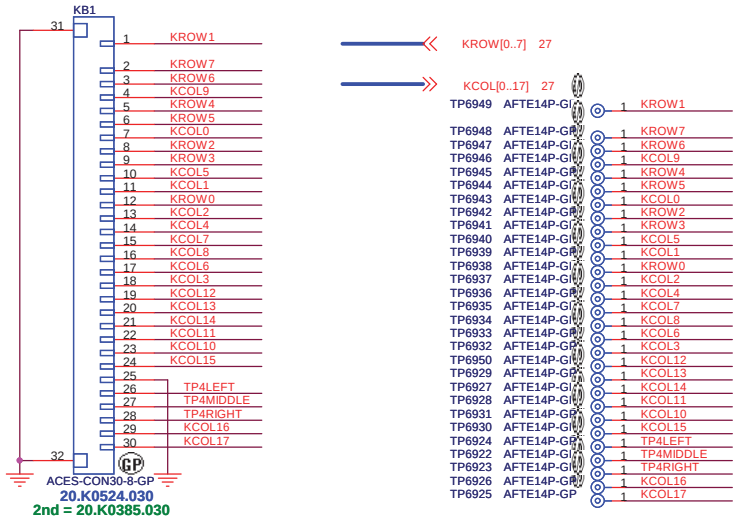

<Core Design>

緯創資通 **Wistron Corporation**
21F, 88, Sec.1, Hsin Tai Wu Rd., Hsichih,
Taipei Hsien 221, Taiwan, R.O.C.

Title: **TOUCH PAD CONNECTOR**

Size	Document Number	Rev
A3	LLW-1 / LGG-1	-1

Date: Tuesday, January 18, 2011 Sheet 69 of 94

BLANK

<Core Design>

緯創資通 Wistron Corporation
21F, 88, Sec.1, Hsin Tai Wu Rd., Hsichih,
Taipei Hsien 221, Taiwan, R.O.C.

Title	BLANK	
Size A4	Document Number LLW-1 / LGG-1	Rev -1
Date: Tuesday, January 18, 2011	Sheet 70 of 94	

Golden Finger for Debug Board

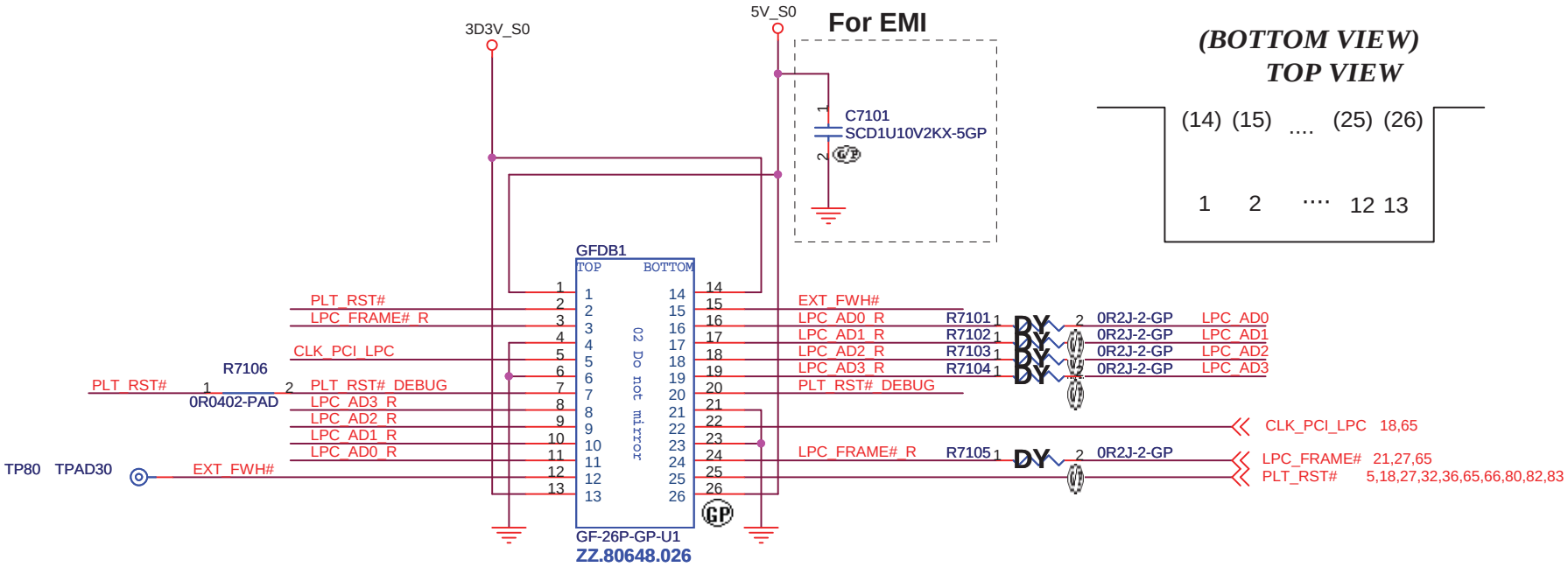

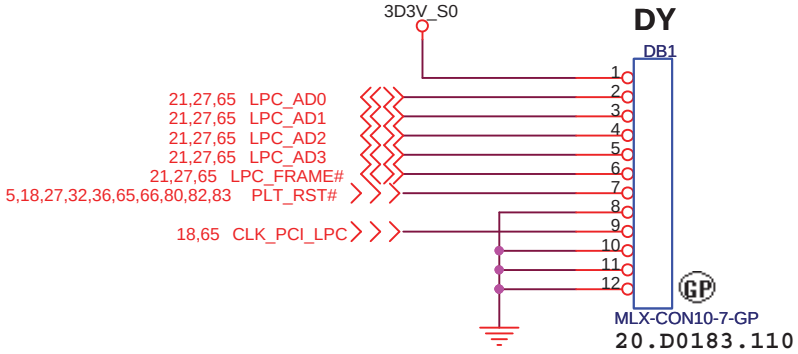

<Core Design>

緯創資通 Wistron Corporation
21F, 88, Sec.1, Hsin Tai Wu Rd., Hsichih,
Taipei Hsien 221, Taiwan, R.O.C.

Title	DEBUG CONN	
Size A4	Document Number LLW-1 / LGG-1	Rev -1
Date: Tuesday, January 18, 2011	Sheet 71 of 94	

BLANK

<Core Design>

緯創資通 Wistron Corporation
21F, 88, Sec.1, Hsin Tai Wu Rd., Hsichih,
Taipei Hsien 221, Taiwan, R.O.C.

Title		
	BLANK	
Size A4	Document Number **LLW-1 / LGG-1**	Rev **-1**
Date: Tuesday, January 18, 2011	Sheet 72 of 94	

BLANK

<Core Design>

緯創資通 Wistron Corporation
21F, 88, Sec.1, Hsin Tai Wu Rd., Hsichih,
Taipei Hsien 221, Taiwan, R.O.C.

Title		
	BLANK	
Size A4	Document Number **LLW-1 / LGG-1**	Rev **-1**
Date: Tuesday, January 18, 2011	Sheet 73 of 94	

Please apply Shield GND for SD_CLK signal between
R5U220 and SD Card Slot to decrease external noise.

Card Reader Connector

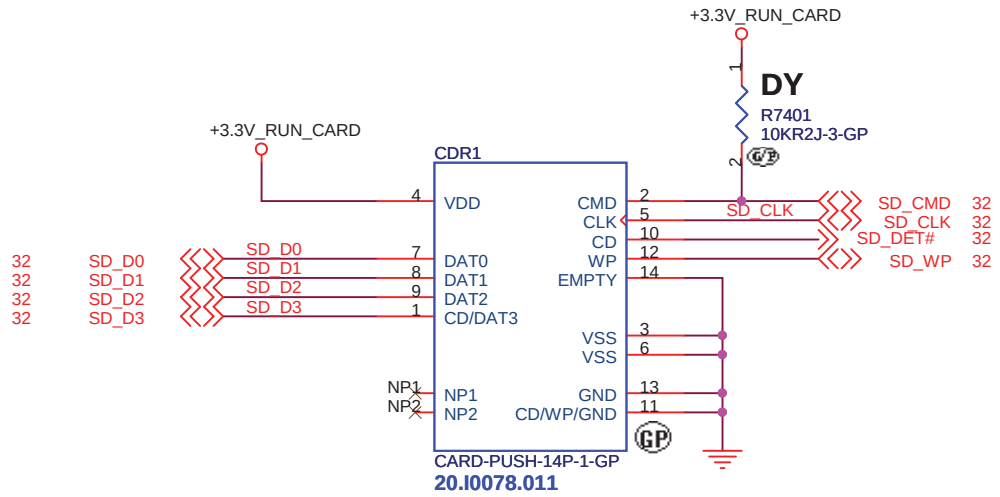

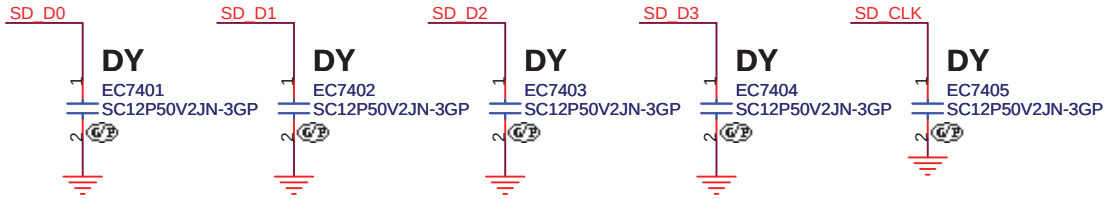

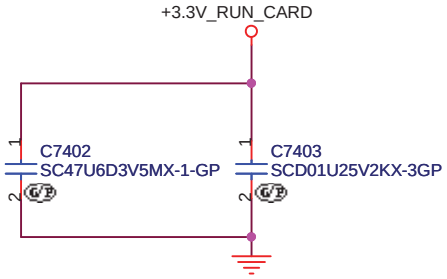

+3.3V_RUN_CARD trace = 40mil

C7402 lose CDR1

<Core Design>

緯創資通 **Wistron Corporation**
21F, 88, Sec.1, Hsin Tai Wu Rd., Hsichih,
Taipei Hsien 221, Taiwan, R.O.C.

Title	***CARD Reader CONN***	
Size A4	Document Number **LLW-1 / LGG-1**	Rev **-1**
Date: Tuesday, January 18, 2011	Sheet 74 of 94	

SSID = ExpressCard

+1.5V_CARD Max. 650mA, Average 500mA.
+3.3V_CARD Max. 1300mA, Average 1000mA
+3.3V_CARDAUX Max. 275mA

<Core Design>

緯創資通 Wistron Corporation
21F, 88, Sec.1, Hsin Tai Wu Rd., Hsichih,
Taipei Hsien 221, Taiwan, R.O.C.

Title: New Card

Size	Document Number	Rev
A3	LLW-1 / LGG-1	-1

Date: Tuesday, January 18, 2011 Sheet 75 of 94

BLANK

<Core Design>

緯創資通 Wistron Corporation
21F, 88, Sec.1, Hsin Tai Wu Rd., Hsichih,
Taipei Hsien 221, Taiwan, R.O.C.

Title		
	BLANK	
Size A4	Document Number **LLW-1 / LGG-1**	Rev **-1**
Date: Tuesday, January 18, 2011	Sheet 76 of 94	

BLANK

<Core Design>

緯創資通	**Wistron Corporation** 21F, 88, Sec.1, Hsin Tai Wu Rd., Hsichih, Taipei Hsien 221, Taiwan, R.O.C.	
Title	***TPM***	
Size Custom	Document Number **LLW-1 / LGG-1**	Rev **-1**
Date: Tuesday, January 18, 2011	Sheet 77 of 94	

BLANK

<Core Design>

緯創資通 Wistron Corporation
21F, 88, Sec.1, Hsin Tai Wu Rd., Hsichih,
Taipei Hsien 221, Taiwan, R.O.C.

Title		
	BLANK	
Size A4	Document Number **LLW-1 / LGG-1**	Rev **-1**
Date: Tuesday, January 18, 2011	Sheet 78 of 94	

G-Sensor

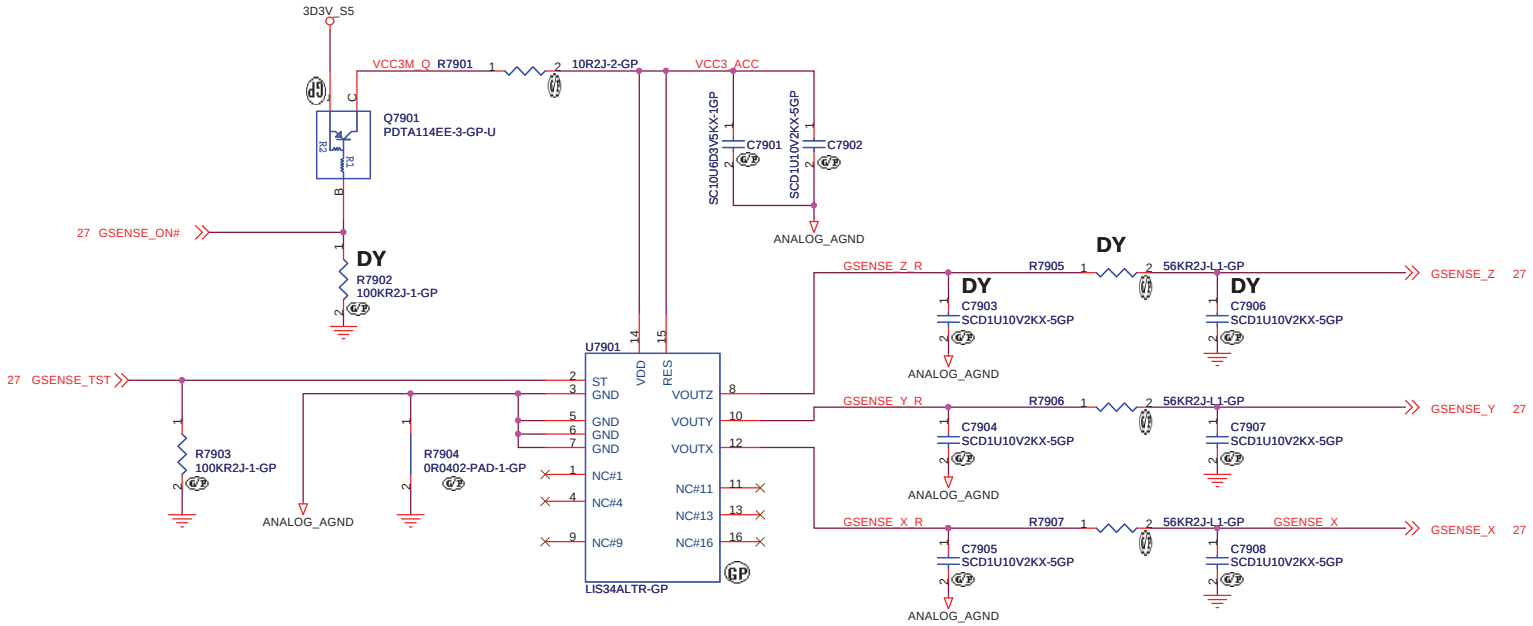

	LIS34AL KXTC8-2850	No Accel
R7902	NO_ASM	ASM
R7903	ASM	ASM
All other	ASM	NO_ASM

Layout Comment :

(1) Place C7904, C7905, Q7901, R7901, R7902, C7901, C7902, R7903, R508 close to U7901.

(2) Avoid routing under DCDC switching area.

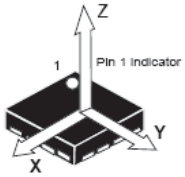

Table 79.1- Transistor multi-source

Supplier	Description	Lenovo P/N	Wistron P/N
NXP	PDTA114EE	N/A	84.00114.H1K
ON	DTA114EET1G	N/A	84.DT114.B11
ROHM	LTA014EEB	N/A	84.00014.01H
Panasonic	DRA9114E0L	N/A	84.09114.A11

Table 79.2- Accelerometer multi-source

Supplier	Description	Lenovo P/N	Wistron P/N
ST	LIS34ALTR-GP	41R0828AA	74.00034.0BZ
ROHM-KIONIX	KXTC8-2850-GP	N/A	74.KXTC8.0BZ

RFID

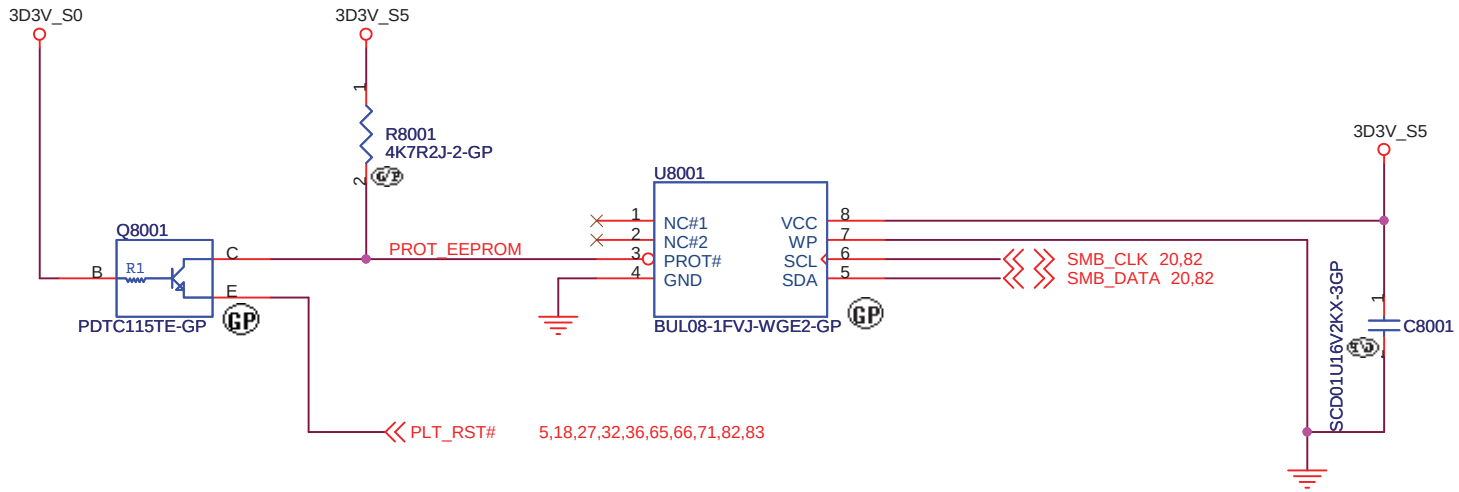

Table 80.1- Transistor multi-source

Supplier	Description	Lenovo P/N	Wistron P/N
NXP	PDTC115TE	N/A	84.00115.E1K
ROHM	LTC015EEB	N/A	84.00015.01H
Panasonic	DRC9115T0L	N/A	84.09115.A11

Table 80.2- EEPROM multi-source

Supplier	Description	Lenovo P/N	Wistron P/N
ROHM	BUL08-1FVJ-WGE2	N/A	72.BUL08.A0Q
NXP	PCA24S08ADP	N/A	72.24S08.A0Q
SANYO	LE26CAP08TT-TLM-H	N/A	72.26C08.00R

<Core Design>

緯創資通 Wistron Corporation
21F, 88, Sec.1, Hsin Tai Wu Rd., Hsichih,
Taipei Hsien 221, Taiwan, R.O.C.

Title: RFID

Size: A4 | Document Number: LLW-1 / LGG-1 | Rev: -1

Date: Tuesday, January 18, 2011 | Sheet 80 of 94

BLANK

TO EXP BOARD CONN

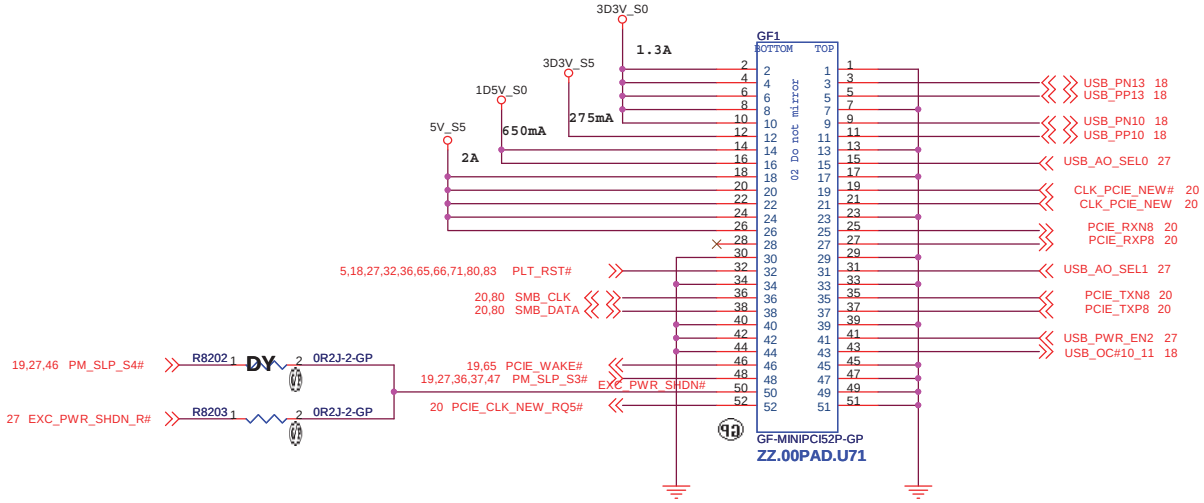

DC BOARD CONN

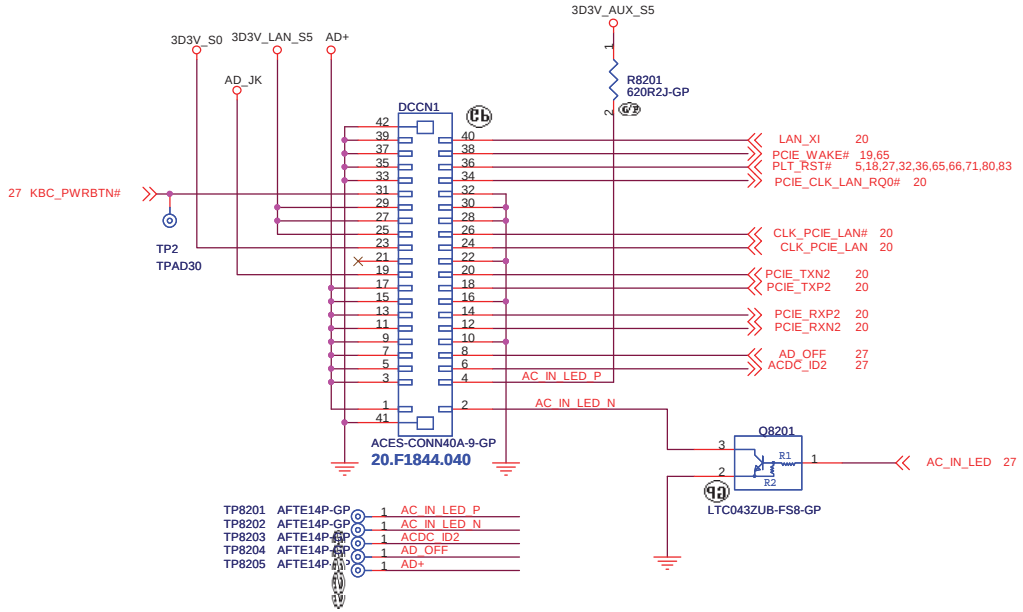

<Core Design>

緯創資通 **Wistron Corporation**
21F, 88, Sec.1, Hsin Tai Wu Rd., Hsichih,
Taipei Hsien 221, Taiwan, R.O.C.

Title: ***IO Board Connector***

Size	Document Number	Rev
A3	LLW-1 / LGG-1	-1

Date: Tuesday, January 18, 2011 Sheet 82 of 94

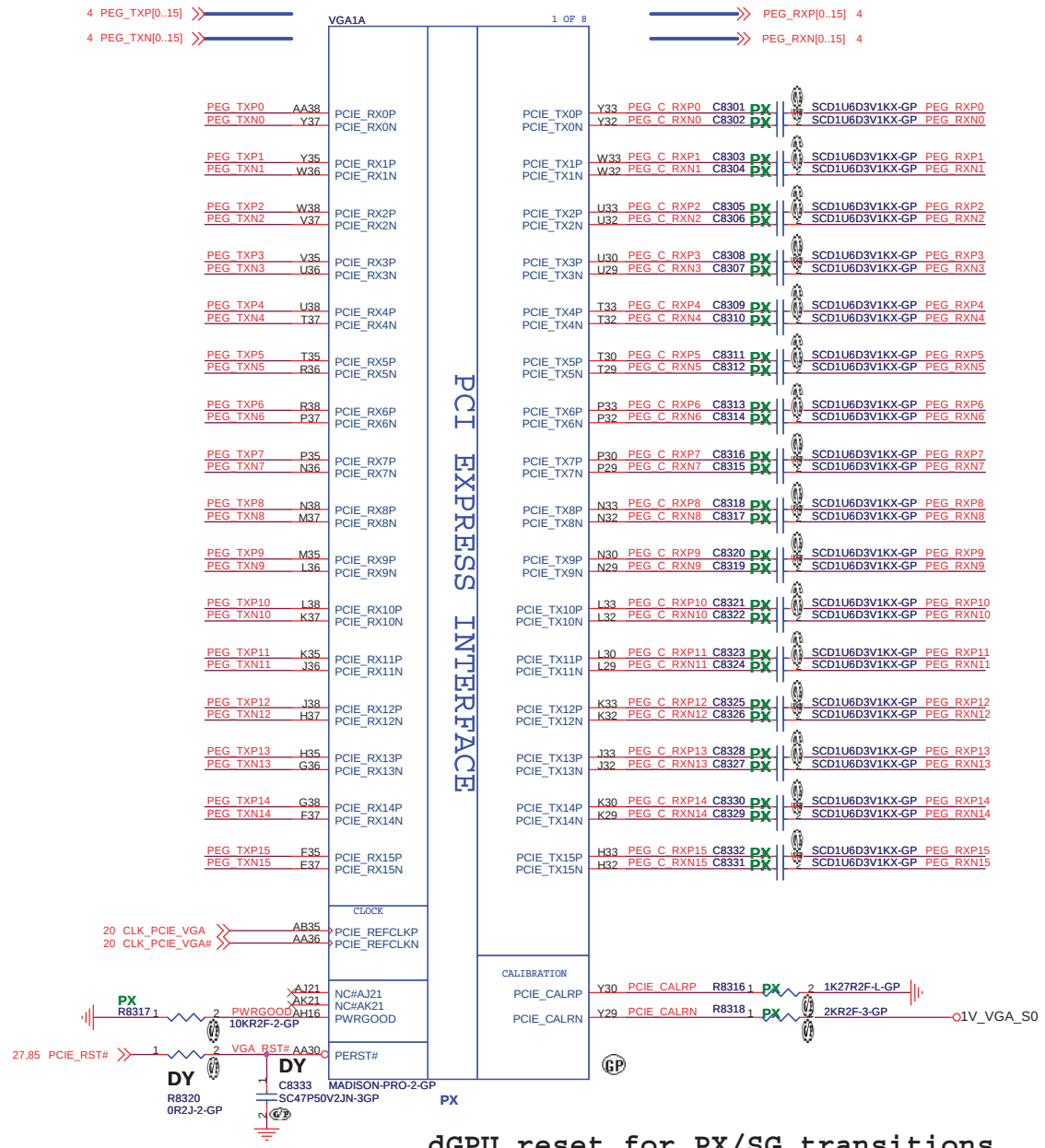

CONFIGURATION STRAPS

ALLOW FOR PULLUP PADS FOR THESE STRAPS AND IF THESE GPIOS ARE USED, THEY MUST NOT CONFLICT DURING RESET

RECOMMENDED SETTINGS
0= DO NOT INSTALL RESISTOR
1 = INSTALL 3K RESISTOR
X = DESIGN DEPENDANT
NA = NOT APPLICABLE

STRAPS	PIN	DESCRIPTION OF DEFAULT SETTINGS	RECOMMEND	PLATFORM SETTING
TX_PWRS_ENB	GPIO0	Transmitter Power Savings Enable 0: 50% Tx output swing 1: Full Tx output swing	X	1
TX_DEEMPH_EN	GPIO1	PCIE TRANSMITTER DE-EMPHASIS ENABLED 0:Tx de-emphasis disabled 1:Tx de-emphasis enabled	X	1
BIF_GEN2_EN_A	GPIO2	0:Advertises the PCIe device as 2.5GT/s capable at power on. 1:Advertises the PCIe device as 5.0GT/s capable at power on.	0	0
GPIO5_AC_BATT	GPIO5	optional input allow the system to request a fast power reduction by setting GPIO5 to low.	?	0
GPIO8_ROMSO	GPIO8	RESERVED	0	0
VGA_DIS	GPIO9	0:VGA Controller capacity enabled 1:The device won't be recognized as the system's VGA controller	0	0
ROMIDCFG[2:0]	GPIO[13:11]	BIOS_ROM_EN=1, Config[2:0] defines the ROM type BIOS_ROM_EN=0, Config[2:0] defines the primary memory aperture size	X X X	0 0 1 (256MB)
GPIO21_BB_EN	GPIO21	RESERVED	0	0
BIOS_ROM_EN	GPIO_22_ROMCSB	0:Disable external BIOS ROM device 1:Enable external BIOS ROM device	X	0
VIP_DEVICE_STRAP_EN	V2SYNC	VIP Device Strap Enable indicates to the software driver that it sense whether or not a VIP device is connected on the VIP Host interface.	X	0
RSVD	H2SYNC	RESERVED	0	0
RSVD	GENERICC	RESERVED	0	0
AUD[1]	HSYNC	AUD[1:0]:11-Audio for both DisplayPort and HDMI	X	1
AUD[0]	VSYNC		X	1

PIN STRAPS

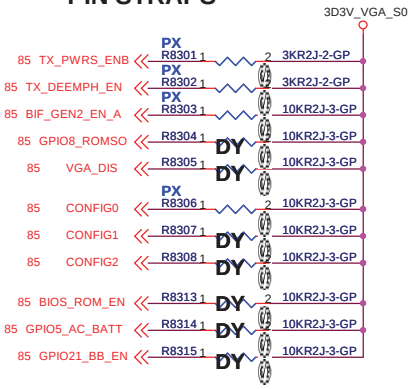

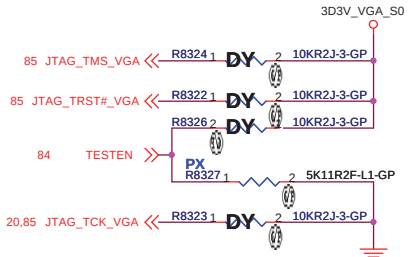

TESTEN Vancouver need to 5.1K ohm
Mannhatton need to 1K ohm

	PE_GPIO0
dGPU mode	H
IGPU	L
IGPU with BACO	H

JTAG SIGNAL OPTION

Signal	Normal mode	Debug mode	pilot run mode
TESTEN	"1"(PU)	"1"(PU)	"0"(PD)
JTAG_TRST#	"0"(PD)	"1"(PU)	NC
JTAG_TCK	CLK	"1"(PU)	NC
JTAG_TMS	"1"(PU)	"1"(PU)	NC

dGPU reset for PX/SG transitions

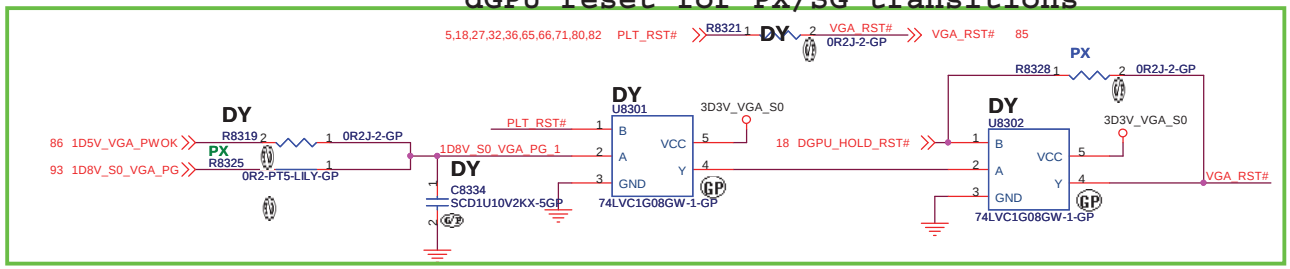

<Core Design>
緯創資通 Wistron Corporation
21F, 88, Sec.1, Hsin Tai Wu Rd., Hsichih, Taipei Hsien 221, Taiwan, R.O.C.

Title: GPU_PCIE/STRAPPING(1/5)

Size: A3 | Document Number: LLW-1 / LGG-1 | Rev: -1

Date: Tuesday, January 18, 2011 | Sheet 83 of 94

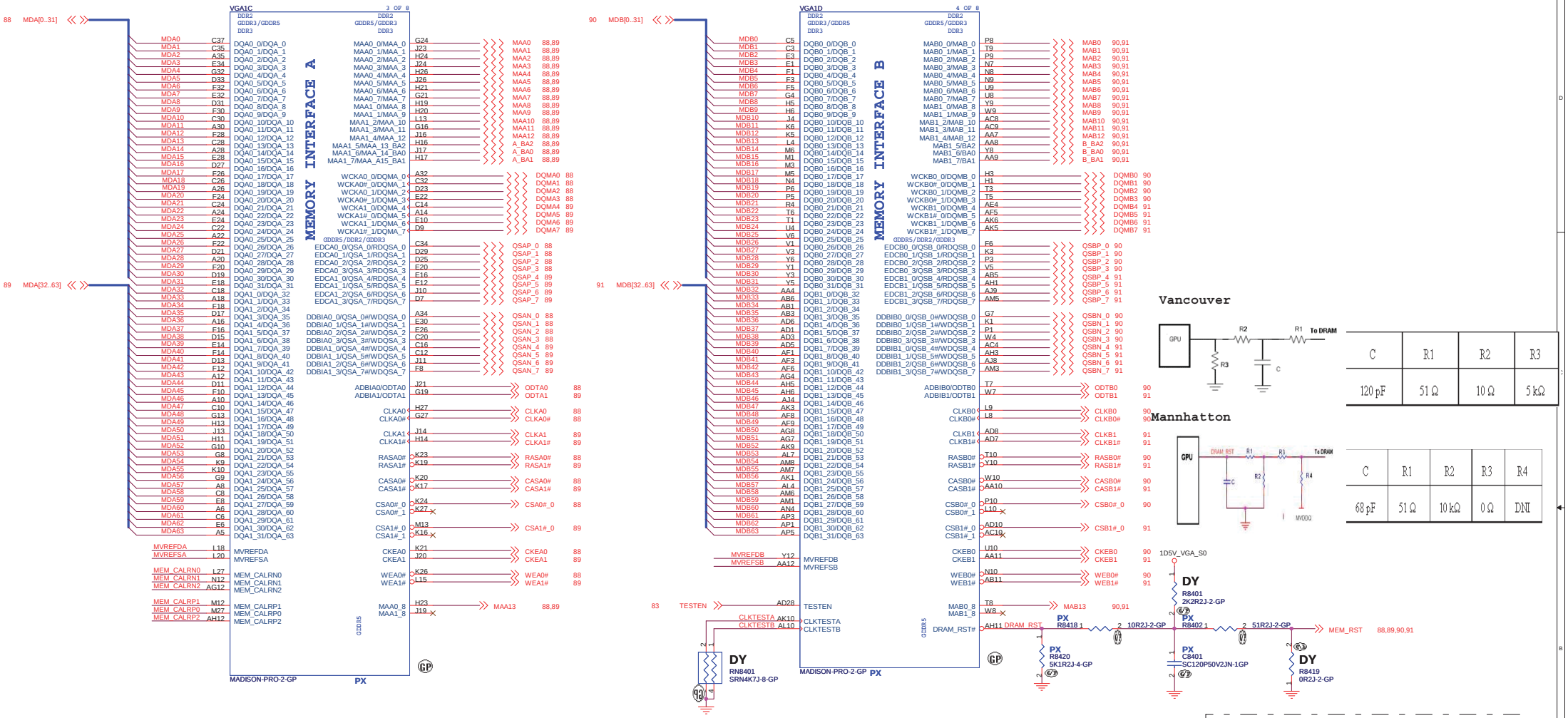

** This basic topology should be used for DRAM_RST for DDR3/GDDR3/GDDR5.These Capacitors and Resistor values are an example only. The Series R and || Cap values will depend on the DRAM load and will have to be calculated for different Memory ,DRAM Load and board to pass Reset Signal Spec.

Madison: MEM_CALRP[0,2] signals are used.
Park: MEM_CALRP1 and MEM_CALRN1 are used

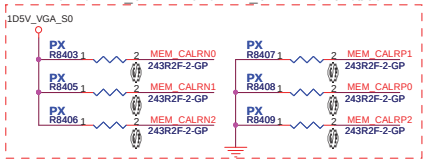

PLACE MVREF DIVIDERS AND CAPS CLOSE TO ASIC

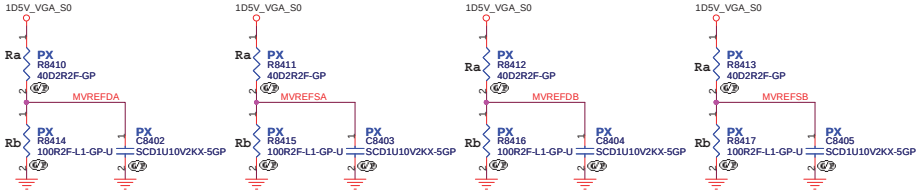

DDR3/GDDR3 Memory Stuff Option(Mad/Park)

	GDDR5	GDDR3	DDR3
MVDDQ	1.5V	1.8V/1.5V	1.5V
Ra	40.2R	40.2R	40.2R
Rb	100R	100R	100R

<Core Design>

緯創資通 Wistron Corporation
21F, 88, Sec.1, Hsin Tai Wu Rd., Hsichih,
Taipei Hsien 221, Taiwan, R.O.C.

Title: GPU Memory(2/5)

Size: Custom | Document Number: LLW-1 / LGG-1 | Rev: -1

Date: Tuesday, January 18, 2011 | Sheet 84 of 94

DVPDATA [3:2:1:0] for VRAM type
selection H/W strap
Should provide VRAM Table for VBios request

DVPDATA [3:0]
0111 2Gbit Hynix-H5TQ2G63BFR-12C (800MHz) (Whistler-LP 2G / Seymour-XT 1G)
1111 2Gbit Samsung-K4W2G1646C-HC12 (800MHz) (Whistler-LP 2G / Seymour-XT 1G)
0011 1Gbit Hynix-H5TQ1G63BFR-12C (800MHz) (Whistler-LP 1G)
1011 1Gbit Samsung-K4W1G1646E-HC12 (800MHz) (Whistler-LP 1G)

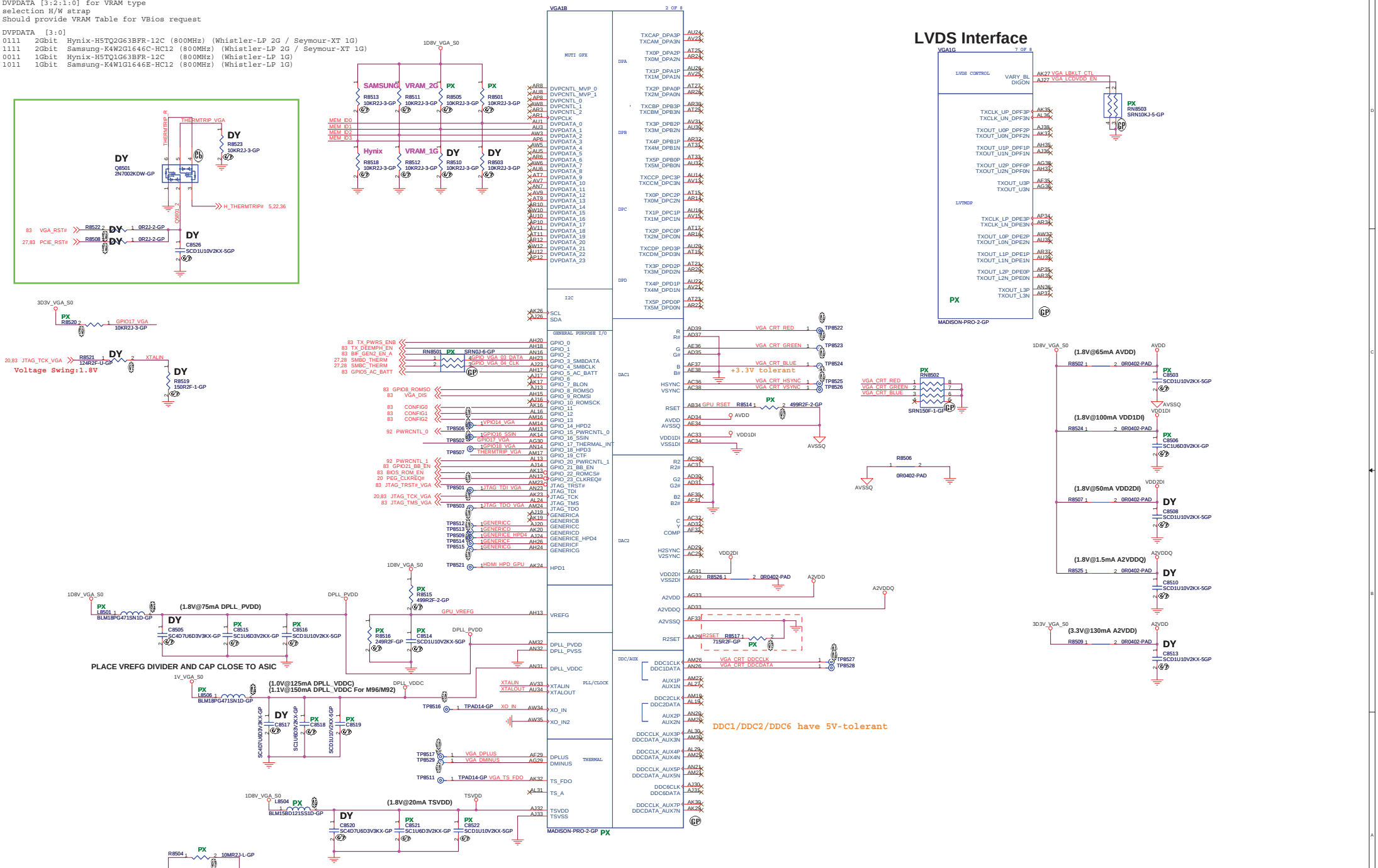

Clock Input Configuraiton -GDDR3/DDR3
a) 27MHz crystal connected to XTALIN or XTALOUT or
b) 27MHz (1.8V) oscillator connected to XTALIN or
c) 27MHz (3.3V) oscillator connected to XO_IN (Park, Madison, and Broadway only)

<Core Design>

Wistron Corporation
21F, 88, Sec.1, Hsin Tai Wu Rd., Hsichih, Taipei Hsien 221, Taiwan, R.O.C.

Title: GPU_DP/LVDS/CRT/GPIO(3/5)

Size	Document Number	Rev
A2	LLW-1 / LGG-1	-1

Date: Tuesday, January 18, 2011 Sheet 85 of 94

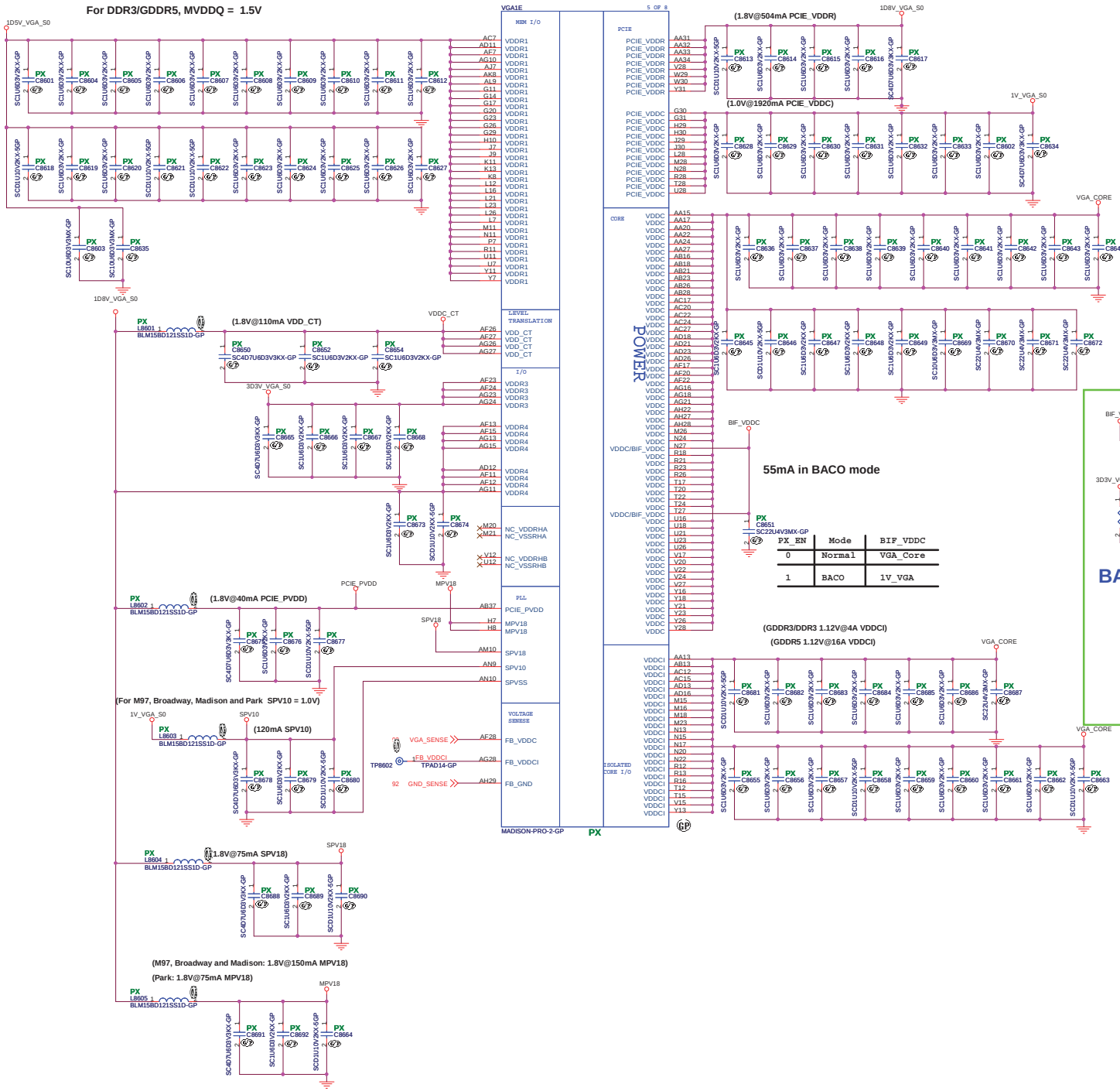

dGPU Power Pins	Voltage	In BACO Mode
PCIE_PVDD, PCIE_VDDR, TSVDD, VDDR4, VDD_CT, DPE_PVDD, DP[F:E]_VDD18, DP[D:A]_PVDD, DP[D:A]_VDD18, AVDD, VDD1DI, A2VDDQ, VDD2DI, DPLL_PVDD, MPV18, and SPV18	1.8V	ON
DP[F:E]_VDD10, DP[D:A]_VDD10, DPLL_VDDC, and SPV10	1.0V	ON
PCIE_VDDC	1.0V	ON
VDDR3 , and A2VDD	3.3V	ON
BIF_VDDC (current consumption = 55mA@1.0V, in BACO mode)	Same as VDDC	ON (Same as PCIE_VDDC)
VDDR1	1.8V/1.5V	OFF
VDDC/VDDCI	0.85-1.15V	OFF

PX_EN	Mode	BIF_VDDC
0	Normal	VGA_Core
1	BACO	1V_VGA

Wistron Corporation
21F, 88, Sec.1, Hsin Tai Wu Rd., Hsichih, Taipei Hsien 221, Taiwan, R.O.C.

Title: GPU_POWER(4/5)

Size: A2 | Document Number: LLW-1 / LGG-1 | Rev: -1

Date: Tuesday, January 18, 2011 | Sheet 86 of 94

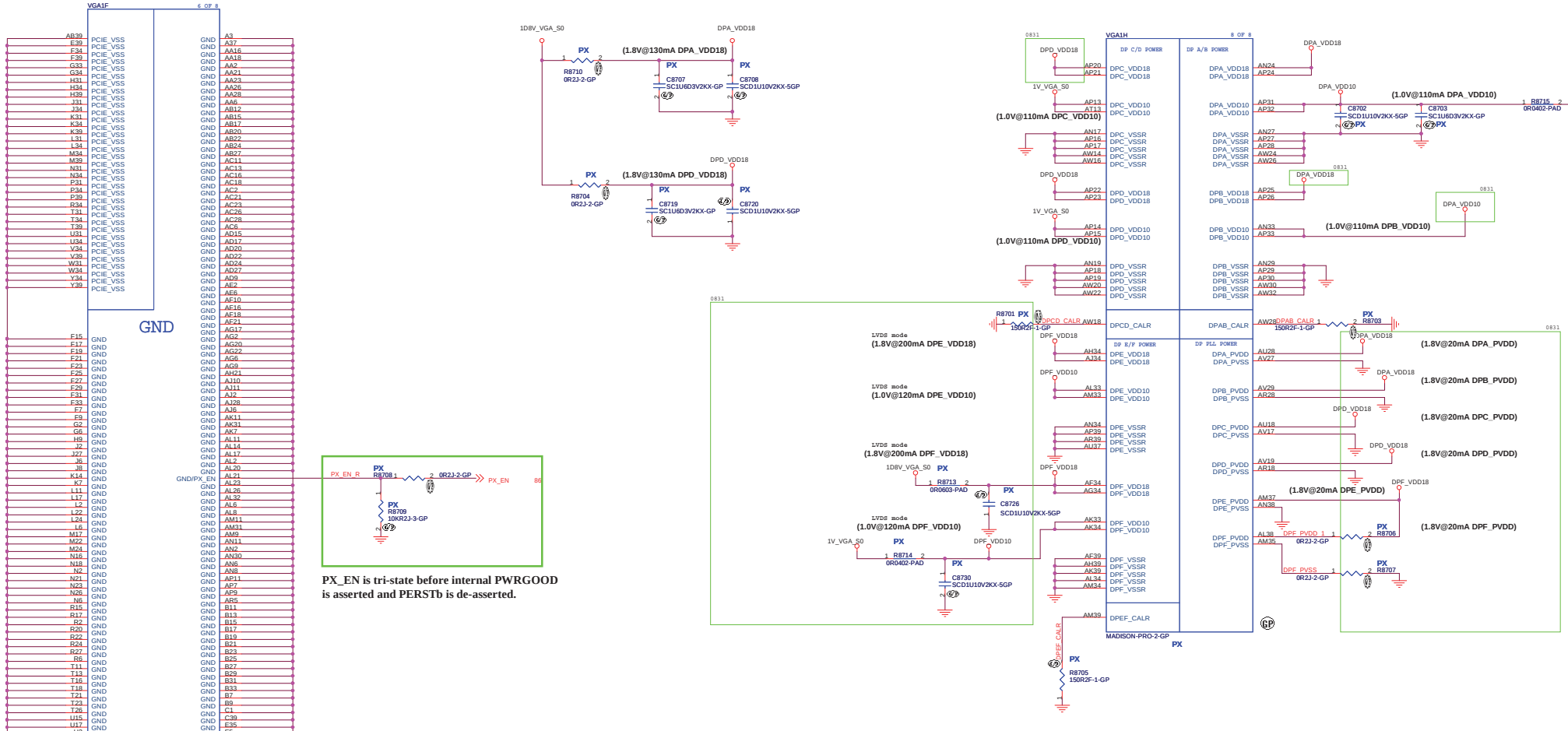

PX_EN is tri-state before internal PWRGOOD is asserted and PERSTb is de-asserted.

For M97/M96, DPF_VDD18 can be shared with DPE_VDD18

For M97/M96, DPF_VDD10 can be shared with DPE_VDD10

For dual link DVI using DPA AND DPB, DPA_VDDxx and DPB_VDDxx can be shared respectively

For dual link DVI using DPC AND DPD, DPC_VDDxx and DPD_VDDxx can be shared respectively

For dual link LVDS, DPE_VDDxx and DPF_VDDxx can be shared respectively

<Core Design>

緯創資通	Wistron Corporation 21F, 88, Sec.1, Hsin Tai Wu Rd., Hsichih, Taipei Hsien 221, Taiwan, R.O.C.	
Title	GPU_DPPWR/GND(5/5)	
Size A2	Document Number LLW-1 / LGG-1	Rev -1
Date: Tuesday, January 18, 2011	Sheet 87 of 94	

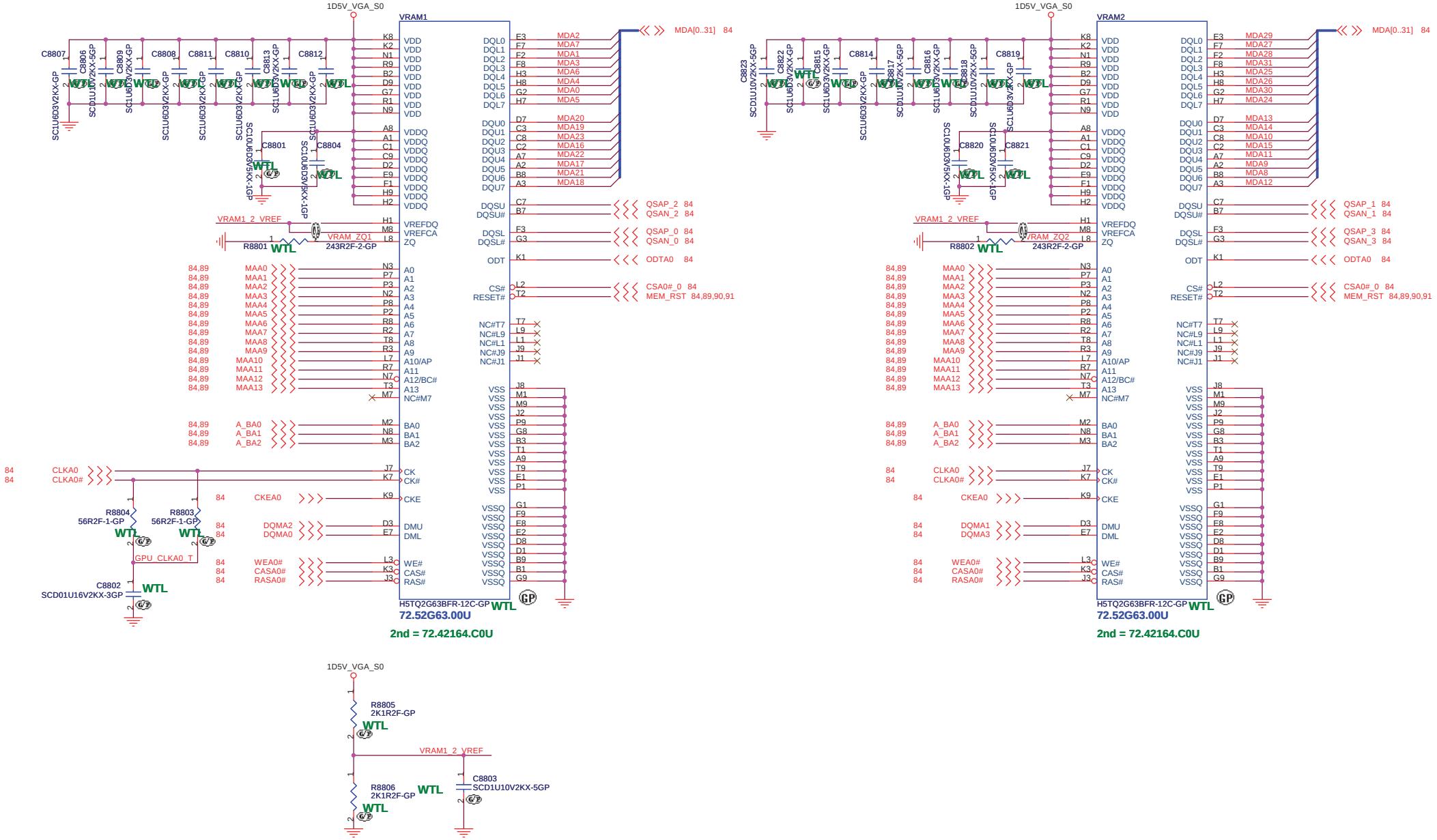

<Core Design>

緯創資通 Wistron Corporation
21F, 88, Sec.1, Hsin Tai Wu Rd., Hsichih,
Taipei Hsien 221, Taiwan, R.O.C.

Title: **GPU-VRAM1,2 (1/4)**

Size	Document Number	Rev
A3	LLW-1 / LGG-1	-1

Date: Tuesday, January 18, 2011 Sheet 88 of 94

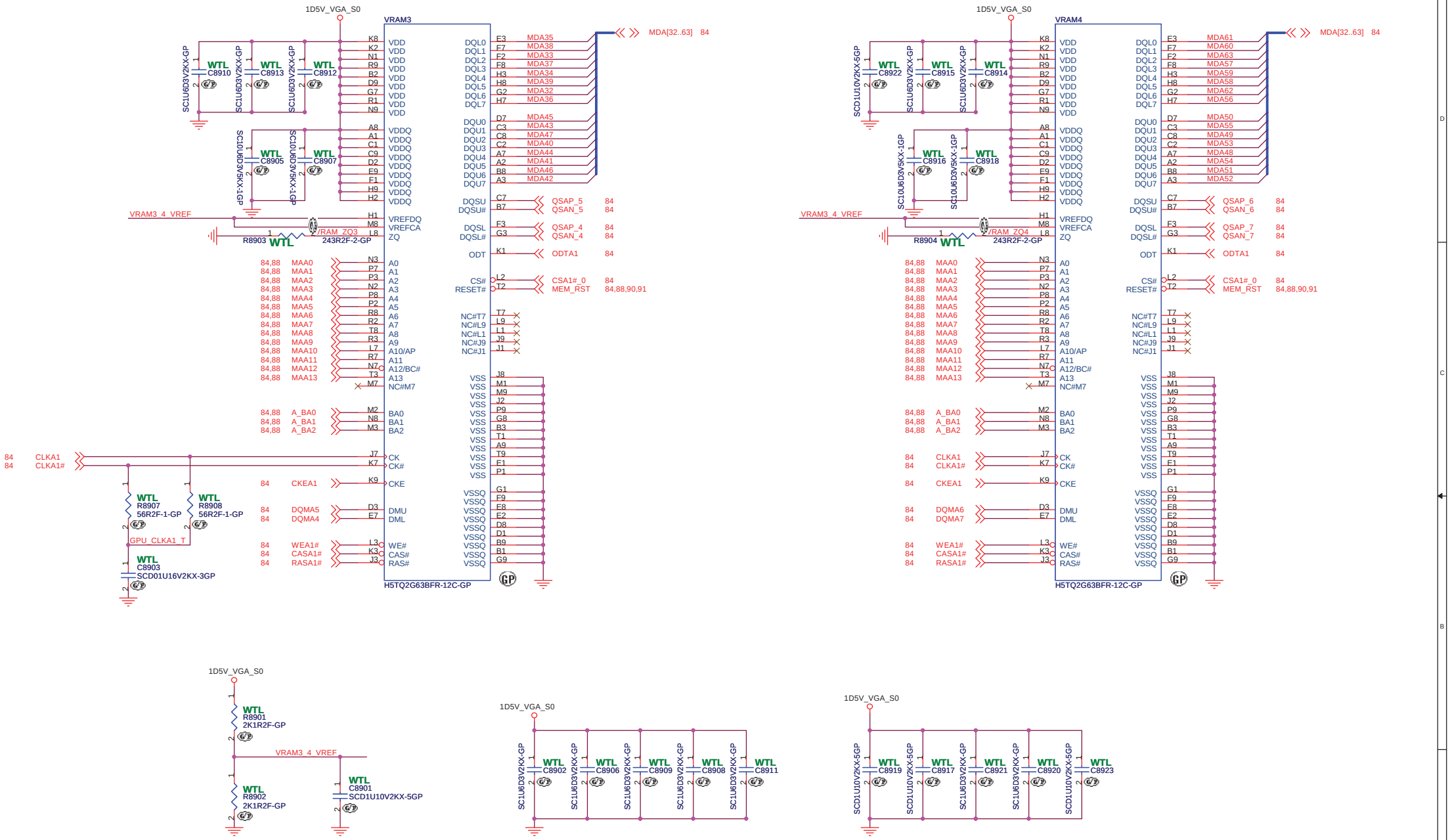

<Core Design>

Wistron Corporation
21F, 88, Sec.1, Hsin Tai Wu Rd., Hsichih,
Taipei Hsien 221, Taiwan, R.O.C.

Title: **GPU-VRAM3,4 (2/4)**

Size	Document Number	Rev
A3	LLW-1 / LGG-1	-1

Date: Tuesday, January 18, 2011 Sheet 89 of 94

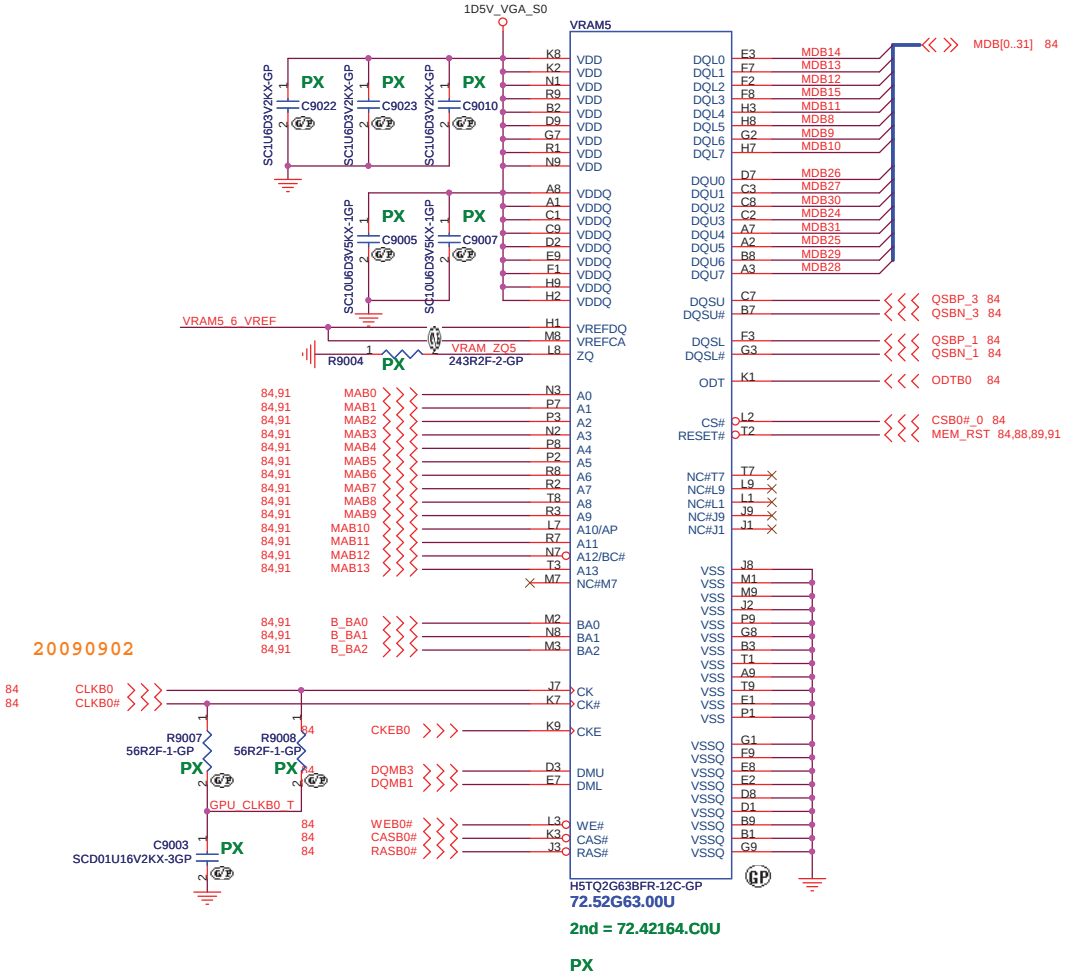

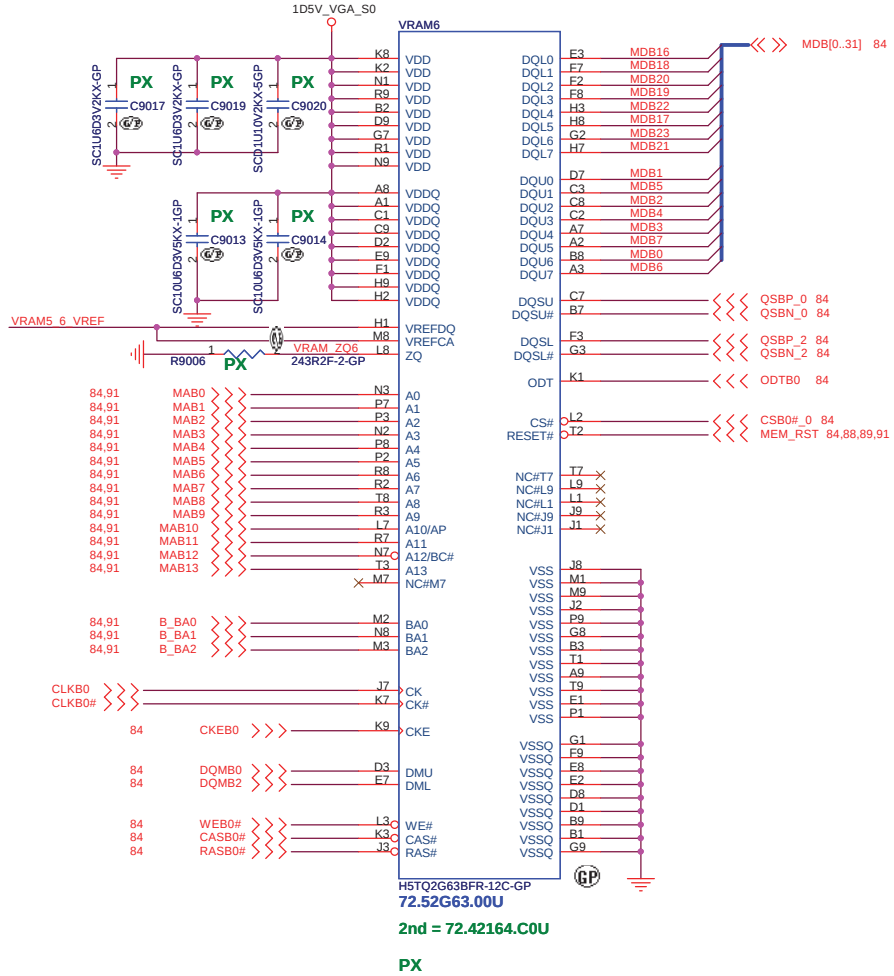

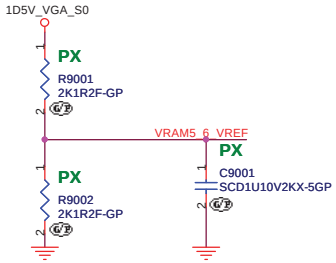

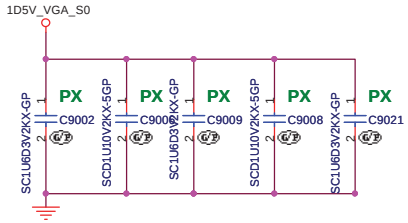

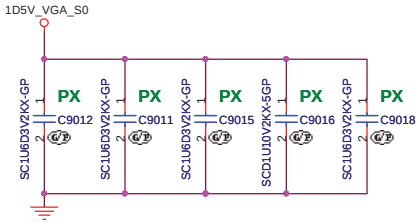

<Core Design>

緯創資通	**Wistron Corporation** 21F, 88, Sec.1, Hsin Tai Wu Rd., Hsichih, Taipei Hsien 221, Taiwan, R.O.C.
Title	***GPU-VRAM5,6 (3/4)***
Size A3 / Document Number	**LLW-1 / LGG-1**
Rev	**-1**
Date: Tuesday, January 18, 2011	Sheet 90 of 94

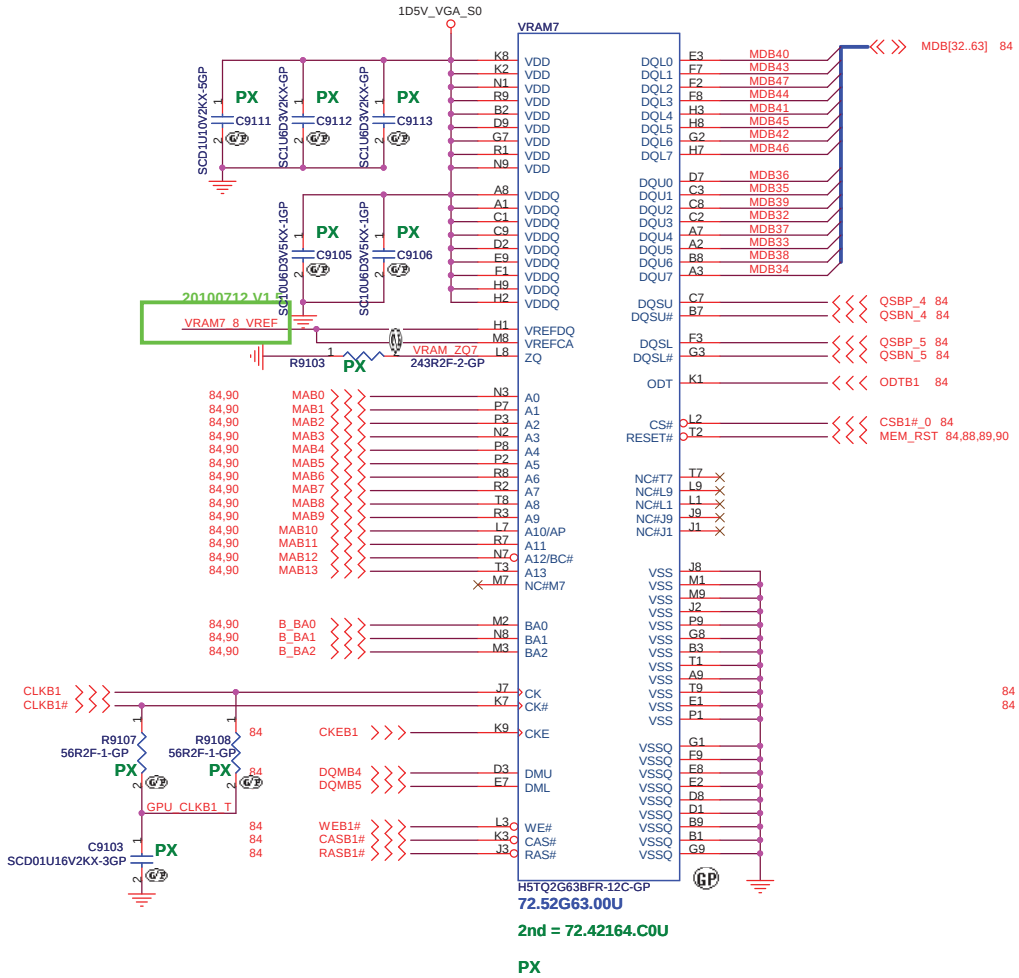

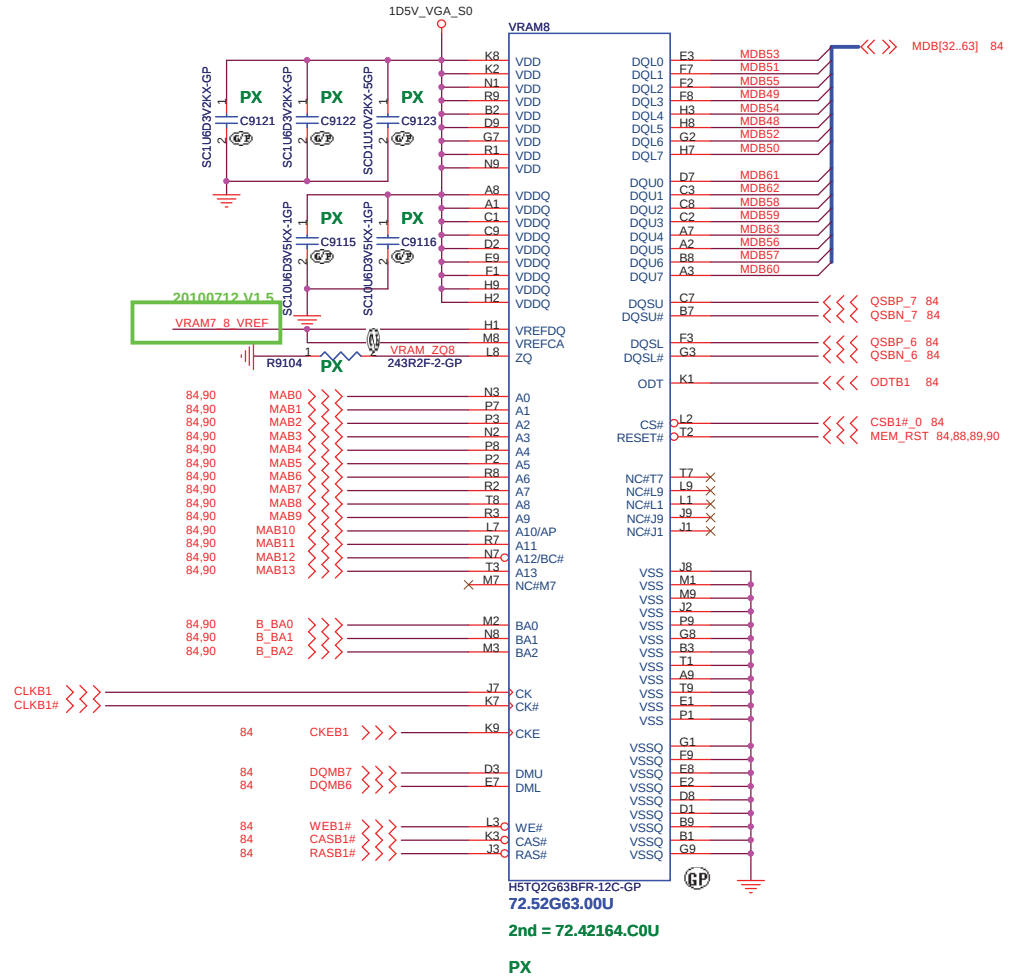

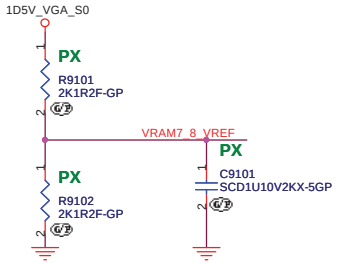

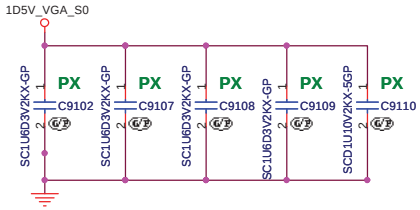

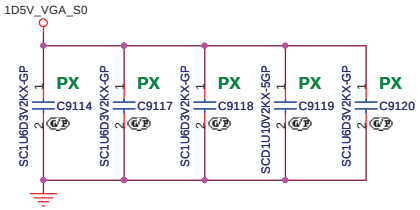

<Core Design>

緯創資通 Wistron Corporation
21F, 88, Sec.1, Hsin Tai Wu Rd., Hsichih,
Taipei Hsien 221, Taiwan, R.O.C.

Title: GPU-VRAM7,8 (4/4)

Size	Document Number	Rev
A3	LLW-1 / LGG-1	-1

Date: Tuesday, January 18, 2011 Sheet 91 of 94

SSID = PWR.Plane.Regulator_GFX

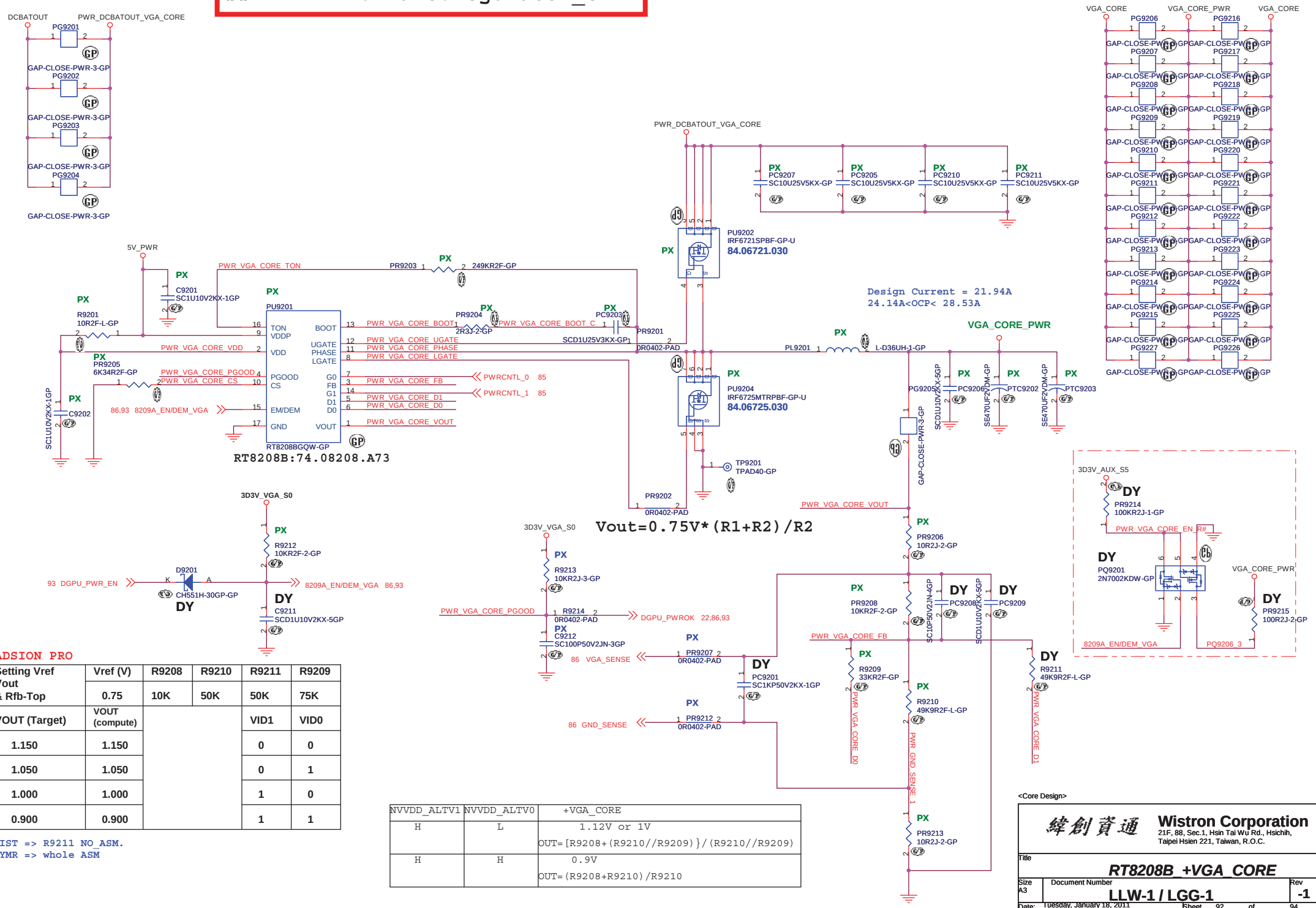

MADSION PRO

Setting Vref Vout & Rfb-Top	Vref (V)	R9208	R9210	R9211	R9209
	0.75	10K	50K	50K	75K
VOUT (Target)	VOUT (compute)			VID1	VID0
1.150	1.150			0	0
1.050	1.050			0	1
1.000	1.000			1	0
0.900	0.900			1	1

WHIST => R9211 NO_ASM.
SEYMR => whole ASM

NVVDD_ALTV1	NVVDD_ALTV0	+VGA_CORE
H	L	1.12V or 1V OUT=[R9208+(R9210//R9209)}/(R9210//R9209)
H	H	0.9V OUT=(R9208+R9210)/R9210

<Core Design>

緯創資通 Wistron Corporation
21F, 88, Sec.1, Hsin Tai Wu Rd., Hsichih, Taipei Hsien 221, Taiwan, R.O.C.

Title: RT8208B_+VGA_CORE

Size: A3 | Document Number: LLW-1 / LGG-1 | Rev: -1

Date: Tuesday, January 18, 2011 | Sheet 92 of 94

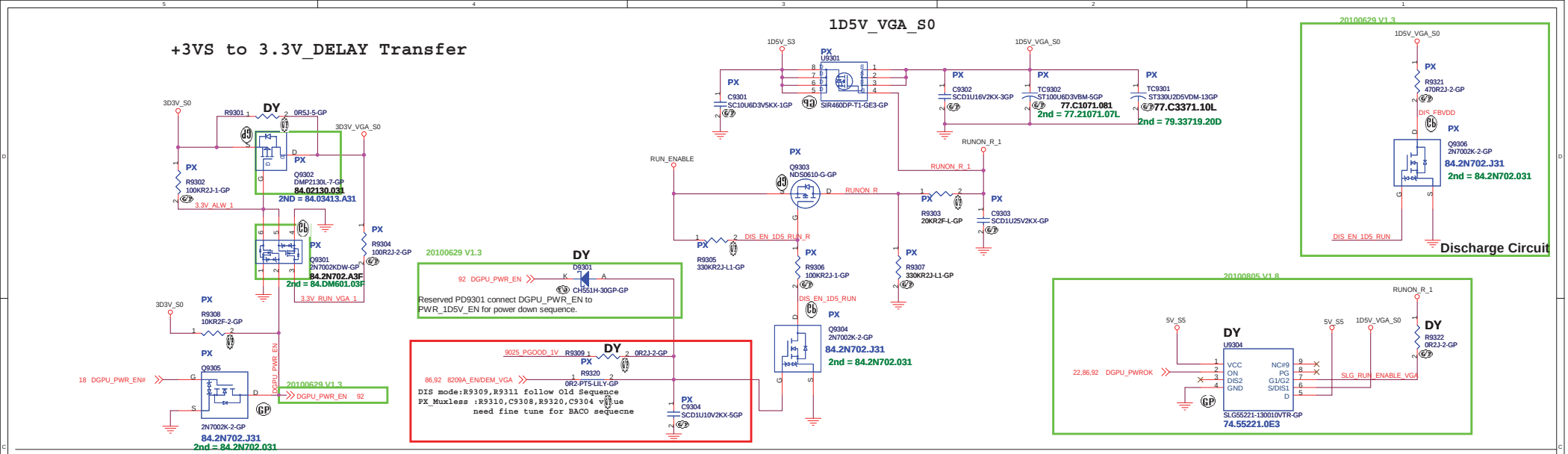

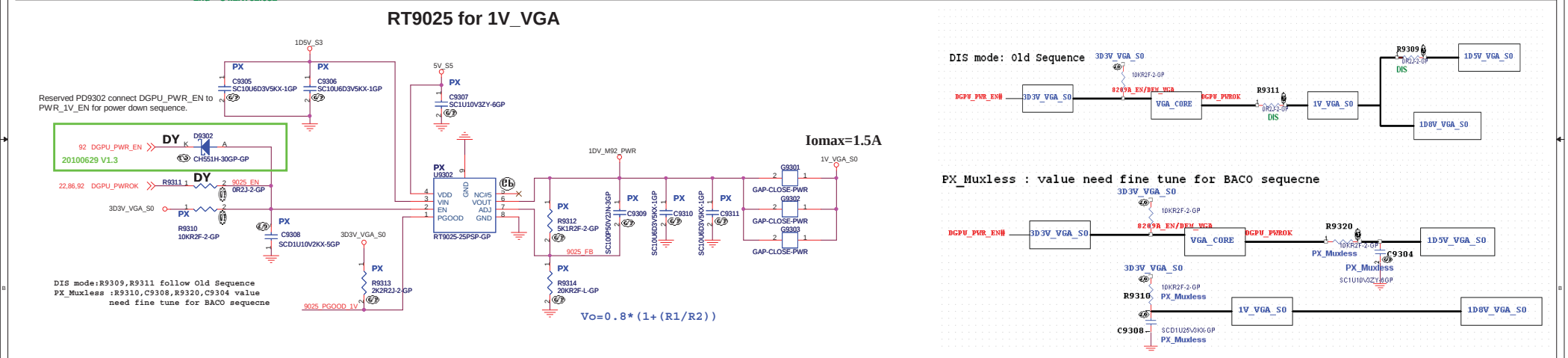

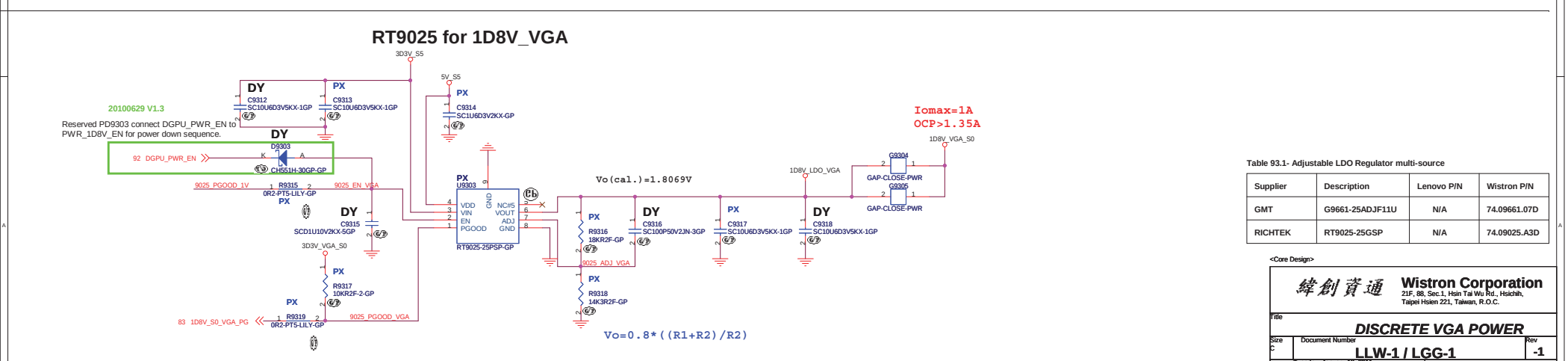

Table 93.1- Adjustable LDO Regulator multi-source

Supplier	Description	Lenovo P/N	Wistron P/N
GMT	G9661-25ADJF11U	N/A	74.09661.07D
RICHTEK	RT9025-25GSP	N/A	74.09025.A3D

<Core Design>

緯創資通 **Wistron Corporation**
21F, 88, Sec.1, Hsin Tai Wu Rd., Hsichih, Taipei Hsien 221, Taiwan, R.O.C.

Title: ***DISCRETE VGA POWER***

Size	Document Number	Rev
C	LLW-1 / LGG-1	-1

Date: Tuesday, January 18, 2011 Sheet 93 of 94

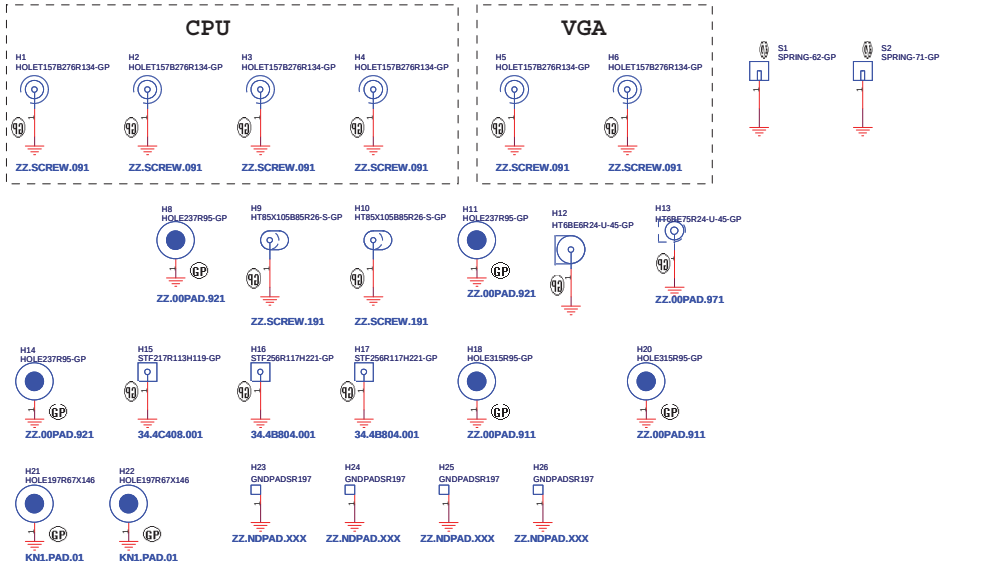

EMI CAP

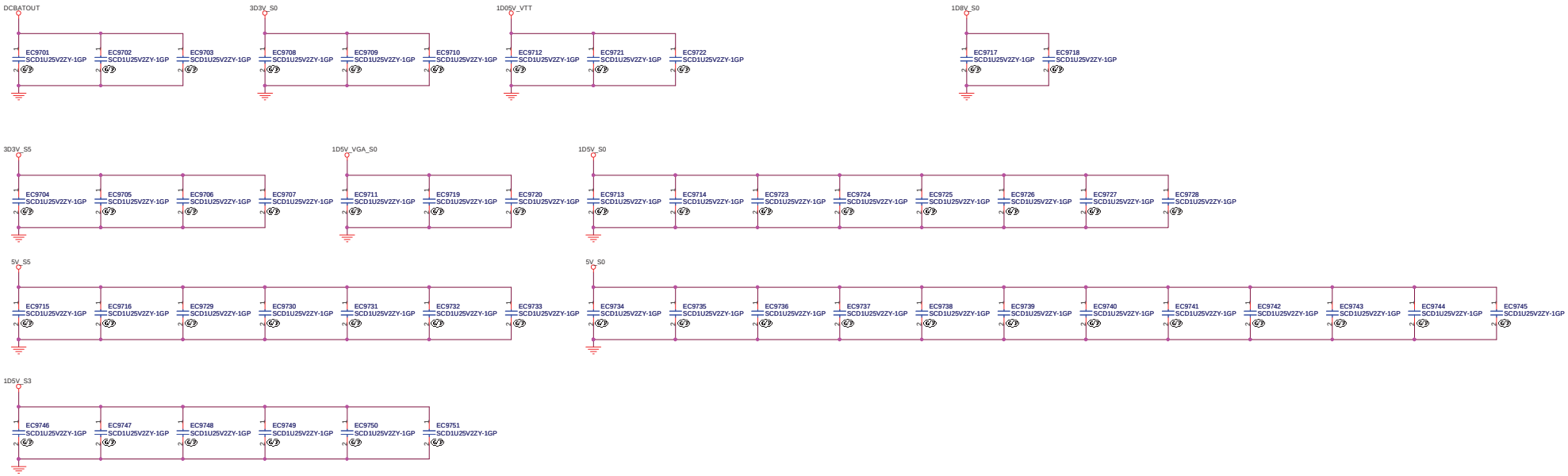

<Core Design>

緯創資通 **Wistron Corporation**
21F, 88, Sec.1, Hsin Tai Wu Rd., Hsichih,
Taipei Hsien 221, Taiwan, R.O.C.

Title: ***UNUSED PARTS/EMI Capacitors***

Size	Document Number	Rev
A2	LLW-1 / LGG-1	-1

Date: Tuesday, January 18, 2011 Sheet 94 of 94