UT7 BLOCK DIAGRAM

01

PCB STACK UP

8L

- **LAYER 1 : TOP**
- **LAYER 2 : SGND**
- **LAYER 3 : IN1**
- **LAYER 4 : SVCC**
- **LAYER 5 : IN2**
- **LAYER 6 : IN3**
- **LAYER 7 : SGND1**
- **LAYER 8 : BOT**

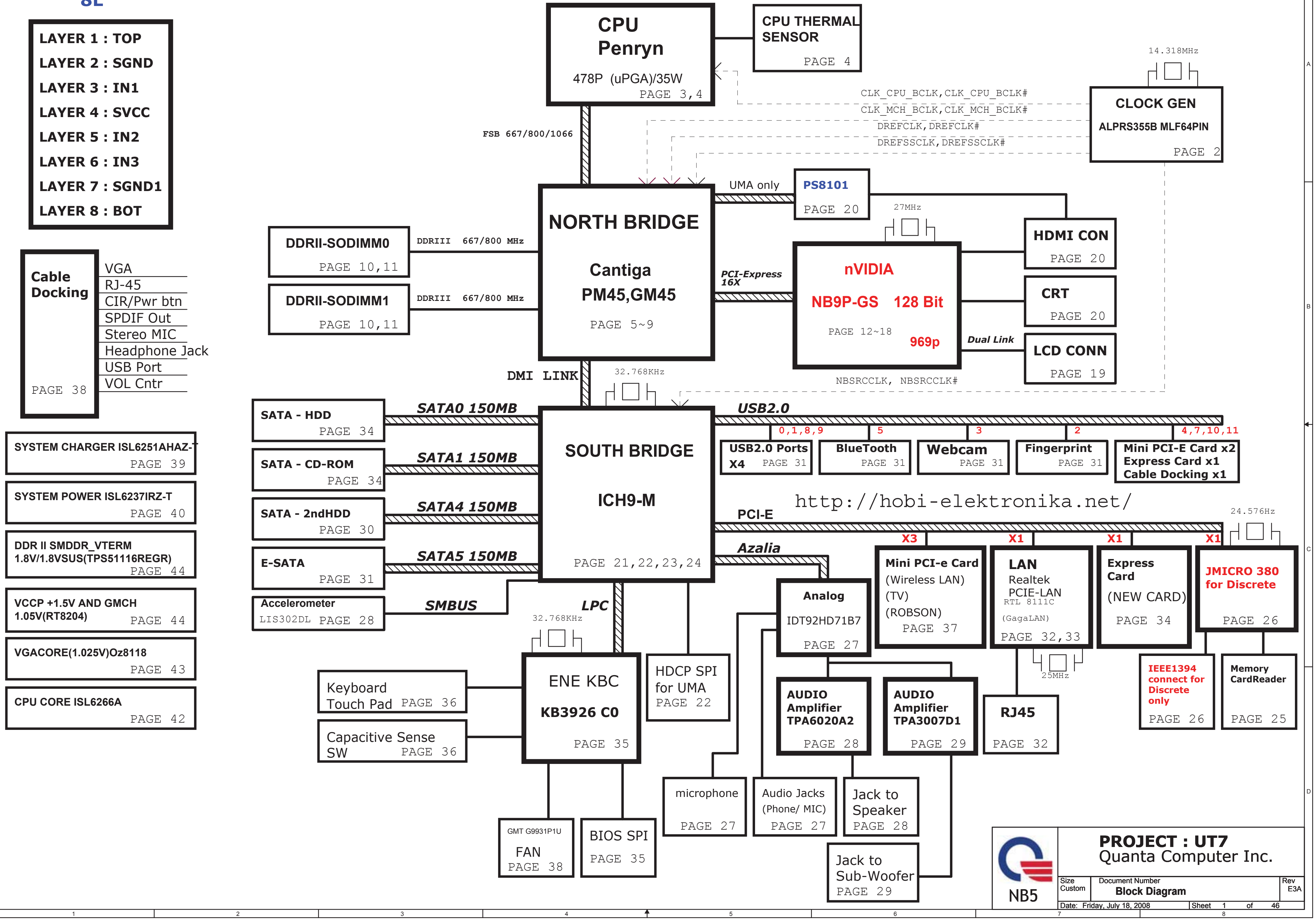

CPU
Penryn
478P (uPGA)/35W
PAGE 3,4
CPU THERMAL SENSOR
PAGE 4
14.318MHz
CLOCK GEN
ALPRS355B MLF64PIN
PAGE 2
CLK_CPU_BCLK,CLK_CPU_BCLK#
CLK_MCH_BCLK,CLK_MCH_BCLK#
DREFCLK,DREFCLK#
DREFSSCLK,DREFSSCLK#
FSB 667/800/1066
NORTH BRIDGE
Cantiga
PM45,GM45
PAGE 5~9
UMA only
PS8101
PAGE 20
27MHz
HDMI CON
PAGE 20
PCI-Express 16X
nVIDIA
NB9P-GS 128 Bit
PAGE 12~18
969p
CRT
PAGE 20
Dual Link
LCD CONN
PAGE 19
NBSRCCLK, NBSRCCLK#
DDRII-SODIMM0
PAGE 10,11
DDRIII 667/800 MHz
DDRII-SODIMM1
PAGE 10,11
DDRIII 667/800 MHz
Cable Docking
PAGE 38
VGA
RJ-45
CIR/Pwr btn
SPDIF Out
Stereo MIC
Headphone Jack
USB Port
VOL Cntr
DMI LINK
32.768KHz
SATA - HDD
PAGE 34
SATA0 150MB
SATA - CD-ROM
PAGE 34
SATA1 150MB
SATA - 2ndHDD
PAGE 30
SATA4 150MB
E-SATA
PAGE 31
SATA5 150MB
Accelerometer
LIS302DL PAGE 28
SMBUS
SOUTH BRIDGE
ICH9-M
PAGE 21,22,23,24
USB2.0
0,1,8,9
5
3
2
4,7,10,11
USB2.0 Ports X4
PAGE 31
BlueTooth
PAGE 31
Webcam
PAGE 31
Fingerprint
PAGE 31
Mini PCI-E Card x2
Express Card x1
Cable Docking x1
http://hobi-elektronika.net/
PCI-E
24.576Hz
Azalia
X3
X1
X1
X1
Analog
IDT92HD71B7
PAGE 27
Mini PCI-e Card
(Wireless LAN)
(TV)
(ROBSON)
PAGE 37
LAN
Realtek
PCIE-LAN
RTL 8111C
(GagaLAN)
PAGE 32,33
Express Card
(NEW CARD)
PAGE 34
JMICRO 380
for Discrete
PAGE 26
25MHz
IEEE1394
connect for Discrete only
PAGE 26
Memory CardReader
PAGE 25
SYSTEM CHARGER ISL6251AHAZ-T
PAGE 39
SYSTEM POWER ISL6237IRZ-T
PAGE 40
DDR II SMDDR_VTERM
1.8V/1.8VSUS(TPS51116REGR)
PAGE 44
VCCP +1.5V AND GMCH
1.05V(RT8204)
PAGE 44
VGACORE(1.025V)Oz8118
PAGE 43
CPU CORE ISL6266A
PAGE 42
LPC
32.768KHz
Keyboard
Touch Pad PAGE 36
Capacitive Sense SW PAGE 36
ENE KBC
KB3926 C0
PAGE 35
HDCP SPI
for UMA
PAGE 22
AUDIO
Amplifier
TPA6020A2
PAGE 28
AUDIO
Amplifier
TPA3007D1
PAGE 29
RJ45
PAGE 32
GMT G9931P1U
FAN
PAGE 38
BIOS SPI
PAGE 35
microphone
PAGE 27
Audio Jacks
(Phone/ MIC)
PAGE 27
Jack to Speaker
PAGE 28
Jack to Sub-Woofer
PAGE 29

NB5

PROJECT : UT7
Quanta Computer Inc.

Size	Document Number	Rev
Custom	**Block Diagram**	E3A

Date: Friday, July 18, 2008 | Sheet 1 of 46

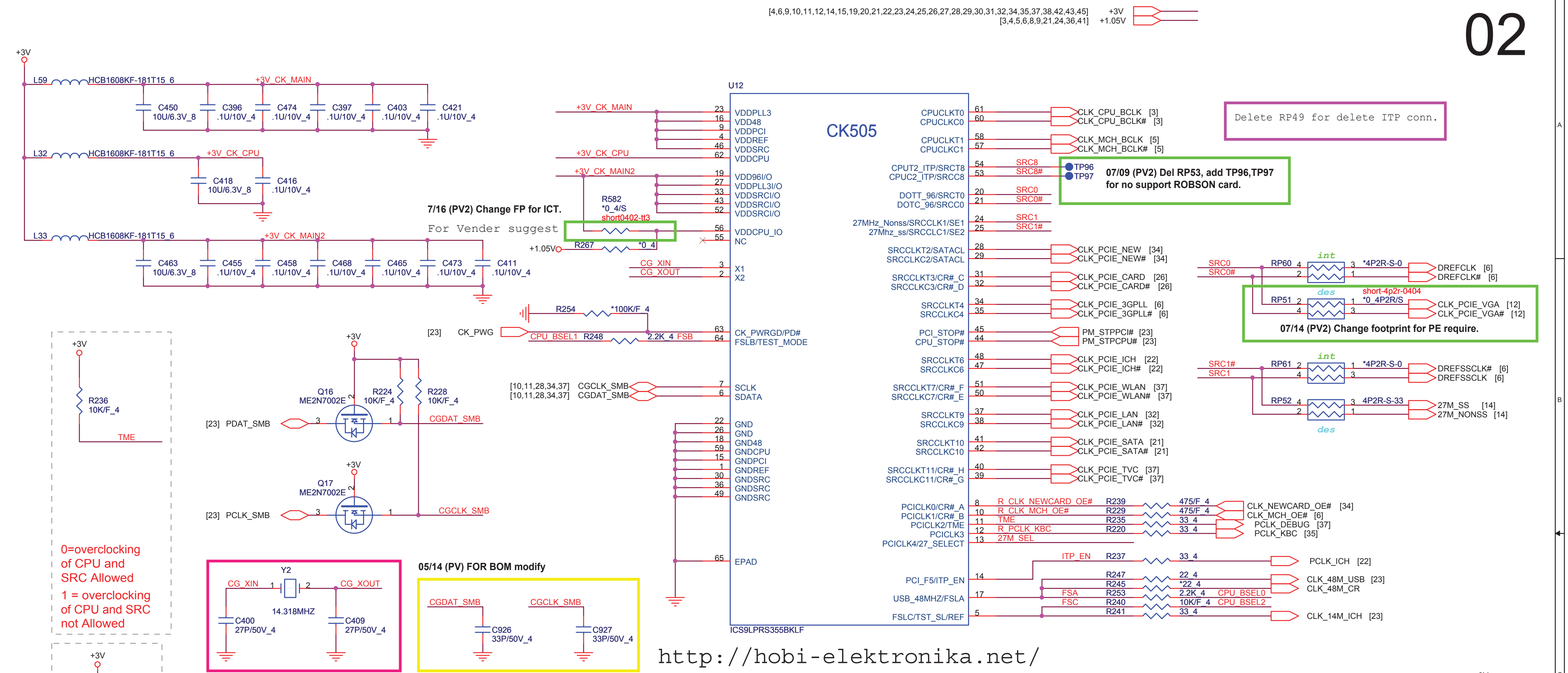
[4,6,9,10,11,12,14,15,19,20,21,22,23,24,25,26,27,28,29,30,31,32,34,35,37,38,42,43,45] +3V
[3,4,5,6,8,9,21,24,36,41] +1.05V
+3V
L59 HCB1608KF-181T15_6
+3V_CK_MAIN
C450 10U/6.3V_8
C396 .1U/10V_4
C474 .1U/10V_4
C397 .1U/10V_4
C403 .1U/10V_4
C421 .1U/10V_4
L32 HCB1608KF-181T15_6
+3V_CK_CPU
C418 10U/6.3V_8
C416 .1U/10V_4
L33 HCB1608KF-181T15_6
+3V_CK_MAIN2
C463 10U/6.3V_8
C455 .1U/10V_4
C458 .1U/10V_4
C468 .1U/10V_4
C465 .1U/10V_4
C473 .1U/10V_4
C411 .1U/10V_4
U12
CK505
VDDPLL3
VDD48
VDDPCI
VDDREF
VDDSRC
VDDCPU
VDD96I/O
VDDPLL3I/O
VDDSRCI/O
VDDSRCI/O
VDDSRCI/O
VDDCPU_IO
NC
X1
X2
CK_PWRGD/PD#
FSLB/TEST_MODE
SCLK
SDATA
GND
GND
GND48
GNDCPU
GNDPCI
GNDREF
GNDSRC
GNDSRC
GNDSRC
EPAD
ICS9LPRS355BKLF
R582 *0_4/S short0402-tt3
R267 *0_4
+1.05V
CG_XIN
CG_XOUT
R254 *100K/F_4
[23] CK_PWG
CPU_BSEL1 R248 2.2K_4 FSB
[10,11,28,34,37] CGCLK_SMB
[10,11,28,34,37] CGDAT_SMB
Q16 ME2N7002E
Q17 ME2N7002E
R224 10K/F_4
R228 10K/F_4
CGDAT_SMB
CGCLK_SMB
[23] PDAT_SMB
[23] PCLK_SMB
CPUCLKT0
CPUCLKC0
CPUCLKT1
CPUCLKC1
CPUT2_ITP/SRCT8
CPUC2_ITP/SRCC8
DOTT_96/SRCT0
DOTC_96/SRCC0
27MHz_Nonss/SRCCLK1/SE1
27Mhz_ss/SRCCLKC1/SE2
SRCCLKT2/SATACL
SRCCLKC2/SATACL
SRCCLKT3/CR#_C
SRCCLKC3/CR#_D
SRCCLKT4
SRCCLKC4
PCI_STOP#
CPU_STOP#
SRCCLKT6
SRCCLKC6
SRCCLKT7/CR#_F
SRCCLKC7/CR#_E
SRCCLKT9
SRCCLKC9
SRCCLKT10
SRCCLKC10
SRCCLKT11/CR#_H
SRCCLKC11/CR#_G
PCICLK0/CR#_A
PCICLK1/CR#_B
PCICLK2/TME
PCICLK3
PCICLK4/27_SELECT
PCI_F5/ITP_EN
USB_48MHZ/FSLA
FSLC/TST_SL/REF
CLK_CPU_BCLK [3]
CLK_CPU_BCLK# [3]
CLK_MCH_BCLK [5]
CLK_MCH_BCLK# [5]
SRC8
SRC8#
TP96
TP97
SRC0
SRC0#
SRC1
SRC1#
CLK_PCIE_NEW [34]
CLK_PCIE_NEW# [34]
CLK_PCIE_CARD [26]
CLK_PCIE_CARD# [26]
CLK_PCIE_3GPLL [6]
CLK_PCIE_3GPLL# [6]
PM_STPPCI# [23]
PM_STPCPU# [23]
CLK_PCIE_ICH [22]
CLK_PCIE_ICH# [22]
CLK_PCIE_WLAN [37]
CLK_PCIE_WLAN# [37]
CLK_PCIE_LAN [32]
CLK_PCIE_LAN# [32]
CLK_PCIE_SATA [21]
CLK_PCIE_SATA# [21]
CLK_PCIE_TVC [37]
CLK_PCIE_TVC# [37]
R_CLK_NEWCARD_OE# R239 475/F_4
R_CLK_MCH_OE# R229 475/F_4
TME R235 33_4
R_PCLK_KBC R220 33_4
27M_SEL
CLK_NEWCARD_OE# [34]
CLK_MCH_OE# [6]
PCLK_DEBUG [37]
PCLK_KBC [35]
ITP_EN R237 33_4
PCLK_ICH [22]
R247 22_4
R245 *22_4
FSA R253 2.2K_4 CPU_BSEL0
FSC R240 10K/F_4 CPU_BSEL2
R241 33_4
CLK_48M_USB [23]
CLK_48M_CR
CLK_14M_ICH [23]
SRC0 SRC0# RP60 int *4P2R-S-0 DREFCLK [6] DREFCLK# [6]
RP51 des short-4p2r-0404 *0_4P2R/S CLK_PCIE_VGA [12] CLK_PCIE_VGA# [12]
SRC1# SRC1 RP61 int *4P2R-S-0 DREFSSCLK# [6] DREFSSCLK [6]
RP52 des 4P2R-S-33 27M_SS [14] 27M_NONSS [14]
+3V
R236 10K/F_4
TME
Y2 14.318MHZ
CG_XIN CG_XOUT
C400 27P/50V_4
C409 27P/50V_4
CGDAT_SMB CGCLK_SMB
C926 33P/50V_4
C927 33P/50V_4

Delete RP49 for delete ITP conn.

07/09 (PV2) Del RP53, add TP96,TP97 for no support ROBSON card.

7/16 (PV2) Change FP for ICT.

For Vender suggest

07/14 (PV2) Change footprint for PE require.

0=overclocking of CPU and SRC Allowed
1 = overclocking of CPU and SRC not Allowed

05/14 (PV) FOR BOM modify

SI modified
C400,C409 change to 27p

http://hobi-elektronika.net/

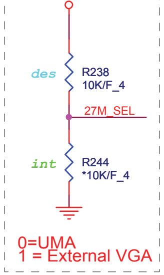
des
R238 10K/F_4
27M_SEL
int
R244 *10K/F_4

0=UMA
1 = External VGA

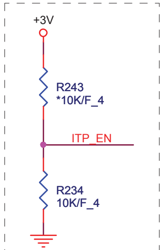
+3V
R243 *10K/F_4
ITP_EN
R234 10K/F_4

Enable ITP CLK

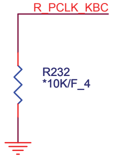
R_PCLK_KBC
R232 *10K/F_4

CK505 QFN64

ICS	ICS9LPRS355BKLF	ALPRS355000
Silego	SLG8SP513VTR	AL8SP513000
Realtek	RTM875N-606-VD-GR	AL000875000

27M_SEL PIN13	PIN20	PIN21	PIN24	PIN25
0=UMA	DOT96T	DOT96C	SRCT1/LCDT_100	SRCT1/LCDT_100
1 = External VGA	SRCT0	SRCC0	27Mout-NSS	27Mout-SS

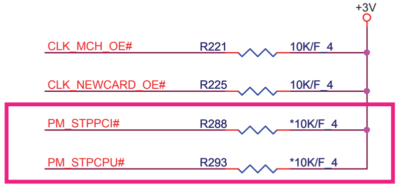
+3V
CLK_MCH_OE# R221 10K/F_4
CLK_NEWCARD_OE# R225 10K/F_4
PM_STPPCI# R288 *10K/F_4
PM_STPCPU# R293 *10K/F_4

For Vender suggest

QT6 modified-0117

CPU Clock select

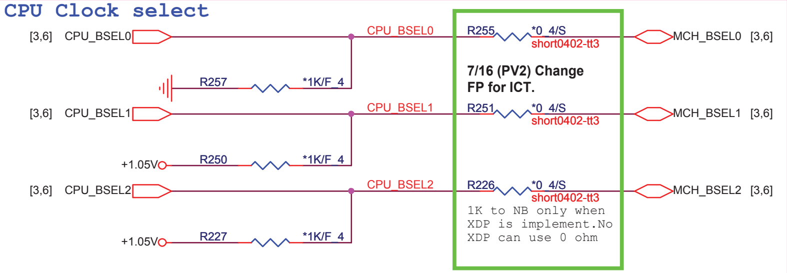
[3,6] CPU_BSEL0
CPU_BSEL0
R255 *0_4/S short0402-tt3
MCH_BSEL0 [3,6]
R257 *1K/F_4
[3,6] CPU_BSEL1
CPU_BSEL1
R251 *0_4/S short0402-tt3
MCH_BSEL1 [3,6]
+1.05V
R250 *1K/F_4
[3,6] CPU_BSEL2
CPU_BSEL2
R226 *0_4/S short0402-tt3
MCH_BSEL2 [3,6]
+1.05V
R227 *1K/F_4

7/16 (PV2) Change FP for ICT.

1K to NB only when XDP is implement.No XDP can use 0 ohm

FSC	FSB	FSA	CPU	SRC	PCI
1	0	1	100	100	33
0	0	1	133	100	33
0	1	1	166	100	33
0	1	0	200	100	33
0	0	0	266	100	33
1	0	0	333	100	33
1	1	0	400	100	33
1	1	1	RSVD	100	33

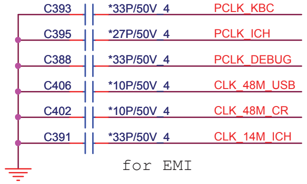
C393 *33P/50V_4 PCLK_KBC
C395 *27P/50V_4 PCLK_ICH
C388 *33P/50V_4 PCLK_DEBUG
C406 *10P/50V_4 CLK_48M_USB
C402 *10P/50V_4 CLK_48M_CR
C391 *33P/50V_4 CLK_14M_ICH

for EMI

PROJECT : UT7
Quanta Computer Inc.
NB5
Size Custom
Document Number **Clock Generator**
Rev E3A
Date: Friday, July 18, 2008 Sheet 2 of 46

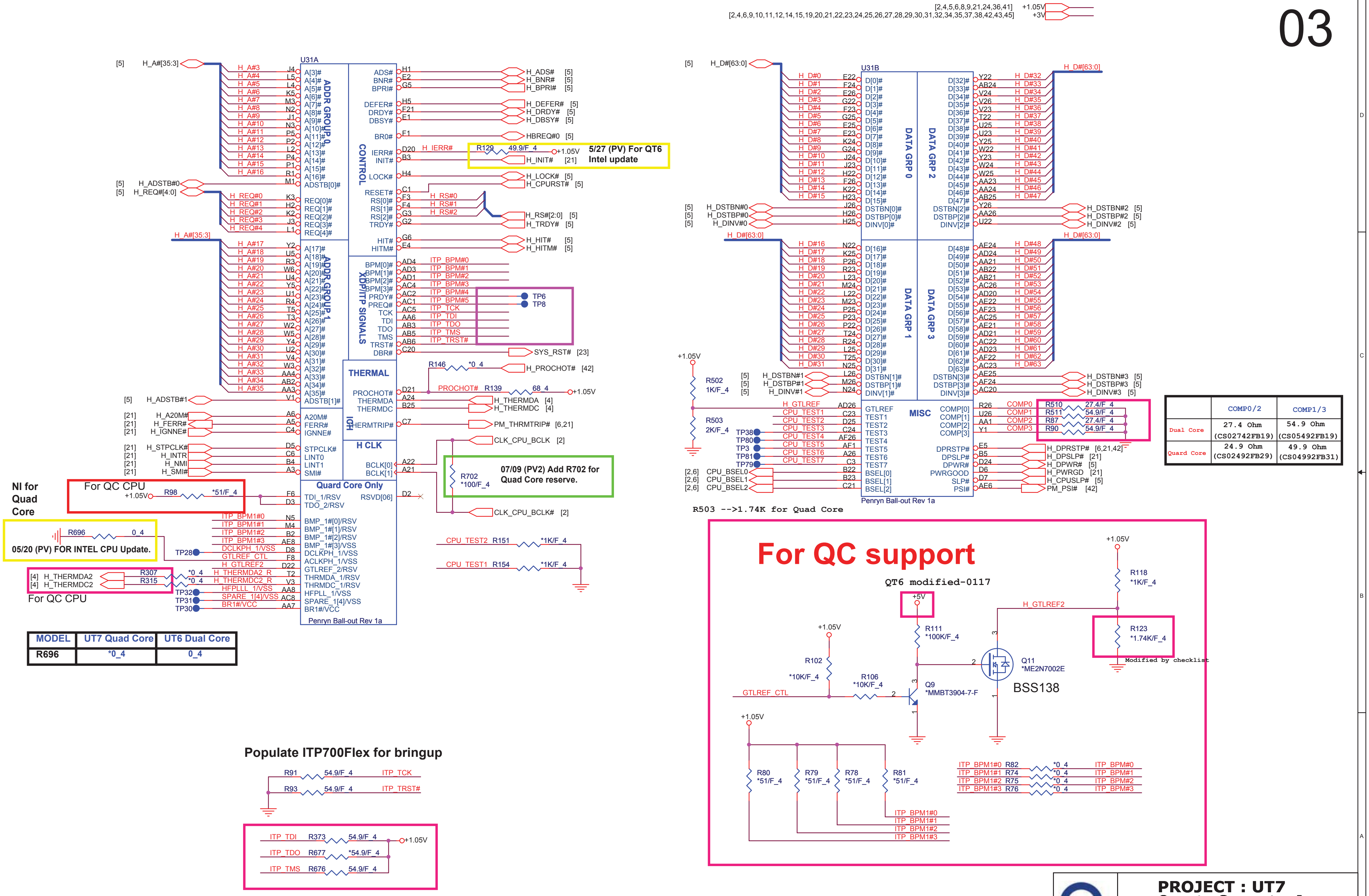
[2,4,5,6,8,9,21,24,36,41] +1.05V
[2,4,6,9,10,11,12,14,15,19,20,21,22,23,24,25,26,27,28,29,30,31,32,34,35,37,38,42,43,45] +3V
U31A
ADDR GROUP_0
ADDR GROUP_1
CONTROL
XDP/ITP SIGNALS
THERMAL
H CLK
ICH
Quard Core Only
Penryn Ball-out Rev 1a
[5] H_A#[35:3]
[5] H_ADSTB#0
[5] H_REQ#[4:0]
[5] H_ADSTB#1
H_ADS# [5]
H_BNR# [5]
H_BPRI# [5]
H_DEFER# [5]
H_DRDY# [5]
H_DBSY# [5]
HBREQ#0 [5]
H_IERR#
R129 49.9/F_4 +1.05V
5/27 (PV) For QT6
Intel update
H_INIT# [21]
H_LOCK# [5]
H_CPURST# [5]
H_RS#[2:0] [5]
H_TRDY# [5]
H_HIT# [5]
H_HITM# [5]
TP6
TP8
SYS_RST# [23]
R146 *0_4
H_PROCHOT# [42]
PROCHOT# R139 68_4 +1.05V
H_THERMDA [4]
H_THERMDC [4]
PM_THRMTRIP# [6,21]
CLK_CPU_BCLK [2]
CLK_CPU_BCLK# [2]
R702 *100/F_4
07/09 (PV2) Add R702 for
Quad Core reserve.
[21] H_A20M#
[21] H_FERR#
[21] H_IGNNE#
[21] H_STPCLK#
[21] H_INTR
[21] H_NMI
[21] H_SMI#
NI for
Quad
Core
For QC CPU
+1.05V R98 *51/F_4
R696 0_4
05/20 (PV) FOR INTEL CPU Update.
TP28
[4] H_THERMDA2
[4] H_THERMDC2
R307 *0_4
R315 *0_4
For QC CPU
TP32
TP31
TP30
CPU_TEST2 R151 *1K/F_4
CPU_TEST1 R154 *1K/F_4
U31B
DATA GRP 0
DATA GRP 1
DATA GRP 2
DATA GRP 3
MISC
[5] H_D#[63:0]
[5] H_DSTBN#0
[5] H_DSTBP#0
[5] H_DINV#0
H_DSTBN#2 [5]
H_DSTBP#2 [5]
H_DINV#2 [5]
[5] H_DSTBN#1
[5] H_DSTBP#1
[5] H_DINV#1
H_DSTBN#3 [5]
H_DSTBP#3 [5]
H_DINV#3 [5]
+1.05V
R502 1K/F_4
R503 2K/F_4
H_GTLREF
TP38
TP80
TP3
TP81
TP79
[2,6] CPU_BSEL0
[2,6] CPU_BSEL1
[2,6] CPU_BSEL2
COMP0 R510 27.4/F_4
COMP1 R511 54.9/F_4
COMP2 R87 27.4/F_4
COMP3 R90 54.9/F_4
H_DPRSTP# [6,21,42]
H_DPSLP# [21]
H_DPWR# [5]
H_PWRGD [21]
H_CPUSLP# [5]
PM_PSI# [42]
R503 -->1.74K for Quad Core
For QC support
QT6 modified-0117
+5V
R111 *100K/F_4
+1.05V
R102 *10K/F_4
R106 *10K/F_4
GTLREF_CTL
Q9 *MMBT3904-7-F
Q11 *ME2N7002E
BSS138
H_GTLREF2
R118 *1K/F_4
R123 *1.74K/F_4
Modified by checklist
R80 *51/F_4
R79 *51/F_4
R78 *51/F_4
R81 *51/F_4
ITP_BPM1#0 R82 *0_4 ITP_BPM#0
ITP_BPM1#1 R74 *0_4 ITP_BPM#1
ITP_BPM1#2 R75 *0_4 ITP_BPM#2
ITP_BPM1#3 R76 *0_4 ITP_BPM#3
Populate ITP700Flex for bringup
R91 54.9/F_4 ITP_TCK
R93 54.9/F_4 ITP_TRST#
ITP_TDI R373 54.9/F_4 +1.05V
ITP_TDO R677 *54.9/F_4
ITP_TMS R676 54.9/F_4

	COMP0/2	COMP1/3
Dual Core	27.4 Ohm (CS02742FB19)	54.9 Ohm (CS05492FB19)
Quard Core	24.9 Ohm (CS02492FB29)	49.9 Ohm (CS04992FB31)

MODEL	UT7 Quad Core	UT6 Dual Core
R696	*0_4	0_4

NB5

PROJECT : UT7
Quanta Computer Inc.

Size Custom
Document Number Penryn 1/2
Rev E3A
Date: Friday, July 18, 2008
Sheet 3 of 46

04

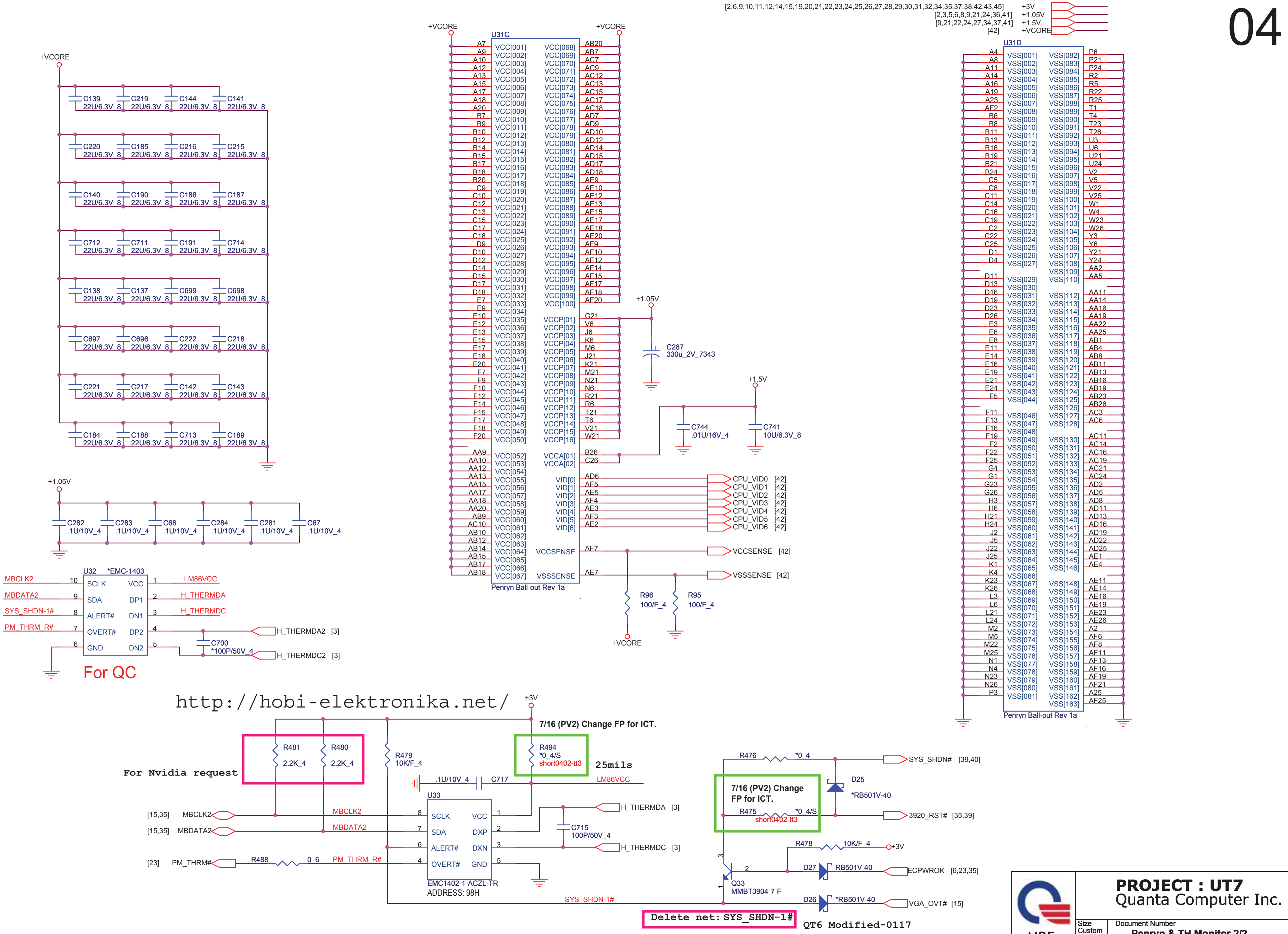

[2,6,9,10,11,12,14,15,19,20,21,22,23,24,25,26,27,28,29,30,31,32,34,35,37,38,42,43,45] +3V
[2,3,5,6,8,9,21,24,36,41] +1.05V
[9,21,22,24,27,34,37,41] +1.5V
[42] +VCORE
+VCORE
C139 22U/6.3V_8
C219 22U/6.3V_8
C144 22U/6.3V_8
C141 22U/6.3V_8
C220 22U/6.3V_8
C185 22U/6.3V_8
C216 22U/6.3V_8
C215 22U/6.3V_8
C140 22U/6.3V_8
C190 22U/6.3V_8
C186 22U/6.3V_8
C187 22U/6.3V_8
C712 22U/6.3V_8
C711 22U/6.3V_8
C191 22U/6.3V_8
C714 22U/6.3V_8
C138 22U/6.3V_8
C137 22U/6.3V_8
C699 22U/6.3V_8
C698 22U/6.3V_8
C697 22U/6.3V_8
C696 22U/6.3V_8
C222 22U/6.3V_8
C218 22U/6.3V_8
C221 22U/6.3V_8
C217 22U/6.3V_8
C142 22U/6.3V_8
C143 22U/6.3V_8
C184 22U/6.3V_8
C188 22U/6.3V_8
C713 22U/6.3V_8
C189 22U/6.3V_8
+1.05V
C282 .1U/10V_4
C283 .1U/10V_4
C68 .1U/10V_4
C284 .1U/10V_4
C281 .1U/10V_4
C67 .1U/10V_4
U31C
VCC[001] … VCC[067]
VCC[068] … VCC[100]
VCCP[01] … VCCP[16]
VCCA[01] VCCA[02]
VID[0] … VID[6]
VCCSENSE
VSSSENSE
Penryn Ball-out Rev 1a
+1.05V
C287 330u_2V_7343
+1.5V
C744 .01U/16V_4
C741 10U/6.3V_8
CPU_VID0 [42]
CPU_VID1 [42]
CPU_VID2 [42]
CPU_VID3 [42]
CPU_VID4 [42]
CPU_VID5 [42]
CPU_VID6 [42]
VCCSENSE [42]
VSSSENSE [42]
R96 100/F_4
R95 100/F_4
+VCORE
U31D
VSS[001] … VSS[163]
Penryn Ball-out Rev 1a
U32 *EMC-1403
MBCLK2
MBDATA2
SYS_SHDN-1#
PM_THRM_R#
SCLK
SDA
ALERT#
OVERT#
GND
VCC
DP1
DN1
DP2
DN2
LM86VCC
H_THERMDA
H_THERMDC
H_THERMDA2 [3]
H_THERMDC2 [3]
C700 *100P/50V_4
For QC
http://hobi-elektronika.net/
+3V
7/16 (PV2) Change FP for ICT.
R481 2.2K_4
R480 2.2K_4
R479 10K/F_4
R494 *0_4/S short0402-tt3
25mils
For Nvidia request
.1U/10V_4
C717
LM86VCC
U33
[15,35] MBCLK2
[15,35] MBDATA2
[23] PM_THRM#
R488 0_6
PM_THRM_R#
EMC1402-1-ACZL-TR
ADDRESS: 98H
H_THERMDA [3]
C715 100P/50V_4
H_THERMDC [3]
SYS_SHDN-1#
Delete net: SYS_SHDN-1#
QT6 Modified-0117
R476 *0_4
SYS_SHDN# [39,40]
D25 *RB501V-40
7/16 (PV2) Change FP for ICT.
R475 *0_4/S short0402-tt3
3920_RST# [35,39]
R478 10K/F_4
+3V
Q33 MMBT3904-7-F
D27 RB501V-40
ECPWROK [6,23,35]
D26 *RB501V-40
VGA_OVT# [15]

PROJECT : UT7
Quanta Computer Inc.

NB5

Size	Document Number	Rev
Custom	Penryn & TH Monitor 2/2	E3A

Date: Friday, July 18, 2008 Sheet 4 of 46

05

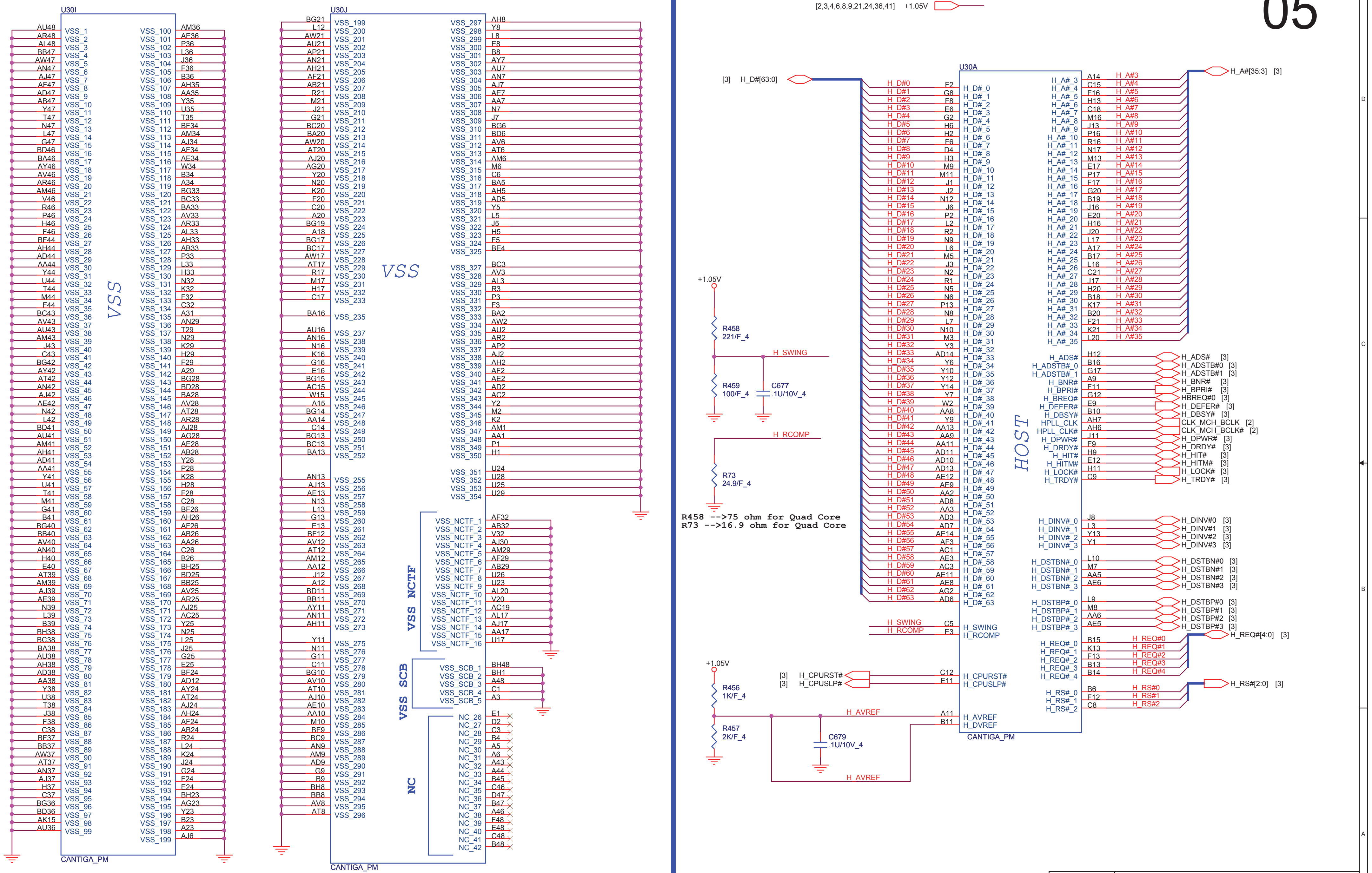
U30I
VSS
CANTIGA_PM
U30J
VSS
VSS NCTF
VSS SCB
NC
CANTIGA_PM
[2,3,4,6,8,9,21,24,36,41] +1.05V
U30A
HOST
CANTIGA_PM
[3] H_D#[63:0]
H_A#[35:3] [3]
+1.05V
R458
221/F_4
H_SWING
R459
100/F_4
C677
.1U/10V_4
H_RCOMP
R73
24.9/F_4
H_ADS# [3]
H_ADSTB#0 [3]
H_ADSTB#1 [3]
H_BNR# [3]
H_BPRI# [3]
HBREQ#0 [3]
H_DEFER# [3]
H_DBSY# [3]
CLK_MCH_BCLK [2]
CLK_MCH_BCLK# [2]
H_DPWR# [3]
H_DRDY# [3]
H_HIT# [3]
H_HITM# [3]
H_LOCK# [3]
H_TRDY# [3]
H_DINV#0 [3]
H_DINV#1 [3]
H_DINV#2 [3]
H_DINV#3 [3]
H_DSTBN#0 [3]
H_DSTBN#1 [3]
H_DSTBN#2 [3]
H_DSTBN#3 [3]
H_DSTBP#0 [3]
H_DSTBP#1 [3]
H_DSTBP#2 [3]
H_DSTBP#3 [3]
H_REQ#[4:0] [3]
H_RS#[2:0] [3]
+1.05V
[3] H_CPURST#
[3] H_CPUSLP#
R456
1K/F_4
R457
2K/F_4
H_AVREF
C679
.1U/10V_4
H_SWING
H_RCOMP
H_CPURST#
H_CPUSLP#
H_AVREF
H_DVREF

R458 -->75 ohm for Quad Core
R73 -->16.9 ohm for Quad Core

NB5

PROJECT : UT7
Quanta Computer Inc.

Size	Document Number	Rev
Custom	Cantiga Host & VSS 1/5	E3A

Date: Friday, July 18, 2008 Sheet 5 of 46

MCH_CFG_5 DMIx2 selection
Low = DMI X2
High = DMI X4 (Default)

MCH_CFG_16 FSB Dynamic ODT
Low = Dynamic ODT disabled
High = Dynamic ODT enabled (default)

MCH_CFG_9 PCI Express Graphic Lane
Low: Reverse Lane
High: Normal operation(Default)

MCH_CFG_19 DMI Lane Reversal
Low = Normal operation (Default)
High = Reverse Lanes

MCH_CFG_6 iTPM Host Interface
Low =The ITPM Host Interface is enabled2
High = The ITPM Host Interface is disabled (default)

MCH_CFG_7 Intel (R) Management Engine Crypto
Low: Intel (R) Management Engine Crypto
TLS cipher suite with no confidentiality
High: Intel (R) Management Engine Crypto
TLS cipher suite with no confidentiality (Default)

MCH_CFG_10 PCIe Lookback Enable
Low = Enabled3
High: Disabled (Default)

MCH_CFG_12/13 XOR/ALLZ/CLOCK Un-gating

MCH_CFG_13	MCH_CFG_12	Configuration
0	0	Reserved
1	0	XOR Mode enabled
0	1	All-Z Mode enabled
1	1	Normal operation (Default)

MCH_CFG_20

Digital Display Port (SDVO/DP/iHDMI) Concurrent with PCIE
Low = Only digital display port (SDVO/DP/iHDMI) or PCIE is operational (default)

High = Digital display port (SDVO/DP/iHDMI) and PCIE are operating simultaneously via the PEG port

MCH_CFG2:0
000 = FSB1066
010 = FSB800
011 = FSB667
Others = Reserved

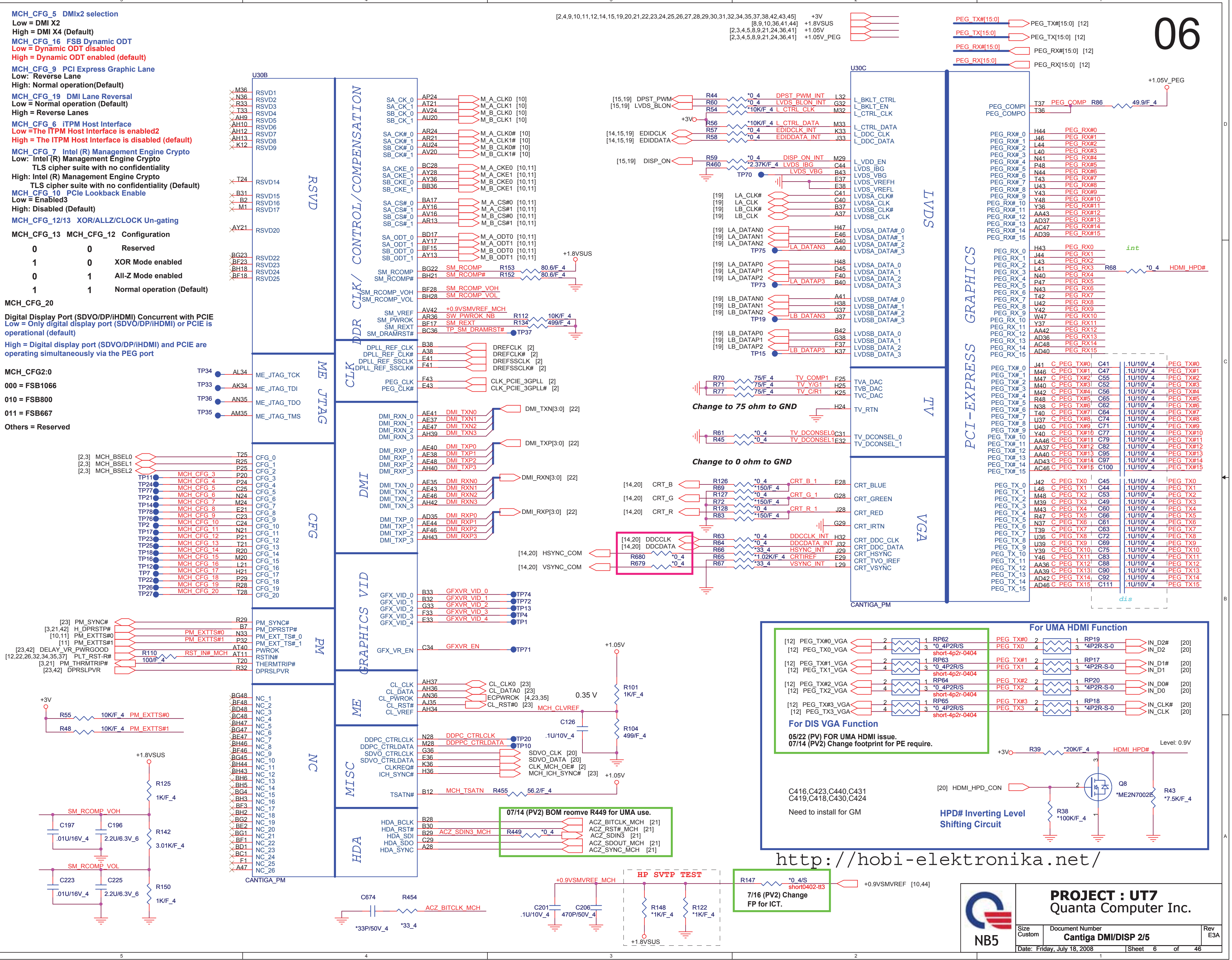
U30B
RSVD
DDR CLK/ CONTROL/COMPENSATION
ME JTAG
CLK
DMI
CFG
GRAPHICS VID
PM
ME
NC
MISC
HDA
CANTIGA_PM
U30C
LVDS
TV
VGA
PCI-EXPRESS GRAPHICS
RSVD1 RSVD2 RSVD3 RSVD4 RSVD5 RSVD6 RSVD7 RSVD8 RSVD9 RSVD14 RSVD15 RSVD16 RSVD17 RSVD20 RSVD22 RSVD23 RSVD24 RSVD25
SA_CK_0 SA_CK_1 SB_CK_0 SB_CK_1
SA_CK#_0 SA_CK#_1 SB_CK#_0 SB_CK#_1
SA_CKE_0 SA_CKE_1 SB_CKE_0 SB_CKE_1
SA_CS#_0 SA_CS#_1 SB_CS#_0 SB_CS#_1
SA_ODT_0 SA_ODT_1 SB_ODT_0 SB_ODT_1
M_A_CLK0 [10] M_A_CLK1 [10] M_B_CLK0 [10] M_B_CLK1 [10]
M_A_CLK0# [10] M_A_CLK1# [10] M_B_CLK0# [10] M_B_CLK1# [10]
M_A_CKE0 [10,11] M_A_CKE1 [10,11] M_B_CKE0 [10,11] M_B_CKE1 [10,11]
M_A_CS#0 [10,11] M_A_CS#1 [10,11] M_B_CS#0 [10,11] M_B_CS#1 [10,11]
M_A_ODT0 [10,11] M_A_ODT1 [10,11] M_B_ODT0 [10,11] M_B_ODT1 [10,11]
SM_RCOMP SM_RCOMP# R153 R152 80.6/F_4 +1.8VSUS
SM_RCOMP_VOH SM_RCOMP_VOL
SM_VREF SM_PWROK SM_REXT SM_DRAMRST#
+0.9VSMVREF_MCH SW_PWROK_NB SM_REXT TP_SM_DRAMRST# R112 10K/F_4 R134 499/F_4 TP37
DPLL_REF_CLK DPLL_REF_CLK# DPLL_REF_SSCLK DPLL_REF_SSCLK#
DREFCLK [2] DREFCLK# [2] DREFSSCLK [2] DREFSSCLK# [2]
PEG_CLK PEG_CLK# CLK_PCIE_3GPLL [2] CLK_PCIE_3GPLL# [2]
ME_JTAG_TCK ME_JTAG_TDI ME_JTAG_TDO ME_JTAG_TMS TP34 TP33 TP36 TP35
DMI_RXN_0 DMI_RXN_1 DMI_RXN_2 DMI_RXN_3 DMI_TXN[3:0] [22]
DMI_RXP_0 DMI_RXP_1 DMI_RXP_2 DMI_RXP_3 DMI_TXP[3:0] [22]
DMI_TXN_0 DMI_TXN_1 DMI_TXN_2 DMI_TXN_3 DMI_RXN[3:0] [22]
DMI_TXP_0 DMI_TXP_1 DMI_TXP_2 DMI_TXP_3 DMI_RXP[3:0] [22]
[2,3] MCH_BSEL0 [2,3] MCH_BSEL1 [2,3] MCH_BSEL2
CFG_0 … CFG_20
MCH_CFG_3 … MCH_CFG_20
TP11 TP24 TP77 TP21 TP14 TP78 TP76 TP2 TP17 TP23 TP25 TP18 TP16 TP12 TP7 TP22 TP26 TP27
GFX_VID_0 GFX_VID_1 GFX_VID_2 GFX_VID_3 GFX_VID_4 GFX_VR_EN
GFXVR_VID_0 TP74 GFXVR_VID_1 TP72 GFXVR_VID_2 TP13 GFXVR_VID_3 TP4 GFXVR_VID_4 TP1 GFXVR_EN TP71
[23] PM_SYNC# [3,21,42] H_DPRSTP# [10,11] PM_EXTTS#0 [11] PM_EXTTS#1 [23,42] DELAY_VR_PWRGOOD [12,22,26,32,34,35,37] PLT_RST-R# [3,21] PM_THRMTRIP# [23,42] DPRSLPVR
PM_SYNC# PM_DPRSTP# PM_EXT_TS#_0 PM_EXT_TS#_1 PWROK RSTIN# THERMTRIP# DPRSLPVR
R110 100/F_4 RST_IN#_MCH
+3V R55 10K/F_4 PM_EXTTS#0 R48 10K/F_4 PM_EXTTS#1
NC_1 … NC_26
CL_CLK CL_DATA CL_PWROK CL_RST# CL_VREF
CL_CLK0 [23] CL_DATA0 [23] ECPWROK [4,23,35] CL_RST#0 [23] MCH_CLVREF
0.35 V +1.05V R101 1K/F_4 R104 499/F_4 C126 .1U/10V_4
DDPC_CTRLCLK DDPC_CTRLDATA SDVO_CTRLCLK SDVO_CTRLDATA CLKREQ# ICH_SYNC# TSATN#
TP20 TP10 SDVO_CLK [20] SDVO_DATA [20] CLK_MCH_OE# [2] MCH_ICH_SYNC# [23]
MCH_TSATN R455 56.2/F_4 +1.05V
HDA_BCLK HDA_RST# HDA_SDI HDA_SDO HDA_SYNC
ACZ_SDIN3_MCH R449 *0_4
ACZ_BITCLK_MCH [21] ACZ_RST#_MCH [21] ACZ_SDIN3 [21] ACZ_SDOUT_MCH [21] ACZ_SYNC_MCH [21]
+1.8VSUS R125 1K/F_4 R142 3.01K/F_4 R150 1K/F_4
SM_RCOMP_VOH C197 .01U/16V_4 C196 2.2U/6.3V_6
SM_RCOMP_VOL C223 .01U/16V_4 C225 2.2U/6.3V_6
C674 *33P/50V_4 R454 *33_4 ACZ_BITCLK_MCH
+0.9VSMVREF_MCH C201 .1U/10V_4 C206 470P/50V_4
HP SVTP TEST R148 *1K/F_4 R122 *1K/F_4 +1.8VSUS
R147 *0_4/S short0402-tt3 +0.9VSMVREF [10,44]
[2,4,9,10,11,12,14,15,19,20,21,22,23,24,25,26,27,28,29,30,31,32,34,35,37,38,42,43,45] +3V
[8,9,10,36,41,44] +1.8VSUS
[2,3,4,5,8,9,21,24,36,41] +1.05V
[2,3,4,5,8,9,21,24,36,41] +1.05V_PEG
PEG_TX#[15:0] [12] PEG_TX[15:0] [12] PEG_RX#[15:0] [12] PEG_RX[15:0] [12]
[15,19] DPST_PWM [15,19] LVDS_BLON R44 R60 R54 DPST_PWM_INT LVDS_BLON_INT L_CTRL_CLK *10K/F_4
+3V R56 *10K/F_4 L_CTRL_DATA
[14,15,19] EDIDCLK [14,15,19] EDIDDATA R57 R58 EDIDCLK_INT EDIDDATA_INT
[15,19] DISP_ON R59 DISP_ON_INT R460 *2.37K/F_4 LVDS_IBG TP70 LVDS_VBG
L_BKLT_CTRL L_BKLT_EN L_CTRL_CLK L_CTRL_DATA L_DDC_CLK L_DDC_DATA L_VDD_EN LVDS_IBG LVDS_VBG LVDS_VREFH LVDS_VREFL
[19] LA_CLK# [19] LA_CLK [19] LB_CLK# [19] LB_CLK
LVDSA_CLK# LVDSA_CLK LVDSB_CLK# LVDSB_CLK
[19] LA_DATAN0 [19] LA_DATAN1 [19] LA_DATAN2 TP75 LA_DATAN3
[19] LA_DATAP0 [19] LA_DATAP1 [19] LA_DATAP2 TP73 LA_DATAP3
[19] LB_DATAN0 [19] LB_DATAN1 [19] LB_DATAN2 TP19 LB_DATAN3
[19] LB_DATAP0 [19] LB_DATAP1 [19] LB_DATAP2 TP15 LB_DATAP3
LVDSA_DATA#_0 … LVDSB_DATA_3
R70 R71 R77 75/F_4 TV_COMP1 TV_Y/G1 TV_C/R1
TVA_DAC TVB_DAC TVC_DAC TV_RTN
Change to 75 ohm to GND
R61 R45 *0_4 TV_DCONSEL0 TV_DCONSEL1 TV_DCONSEL_0 TV_DCONSEL_1
Change to 0 ohm to GND
[14,20] CRT_B [14,20] CRT_G [14,20] CRT_R
R126 R69 R127 R72 R128 R83 *0_4 *150/F_4 CRT_B_1 CRT_G_1 CRT_R_1
CRT_BLUE CRT_GREEN CRT_RED CRT_IRTN
[14,20] DDCCLK [14,20] DDCDATA R680 R679 *0_4
[14,20] HSYNC_COM [14,20] VSYNC_COM
R63 R64 R66 R65 R67 DDCCLK_INT DDCDATA_INT HSYNC_INT CRTIREF VSYNC_INT *33_4 *1.02K/F_4
CRT_DDC_CLK CRT_DDC_DATA CRT_HSYNC CRT_TVO_IREF CRT_VSYNC
CANTIGA_PM
PEG_COMPI PEG_COMPO +1.05V_PEG PEG_COMP R86 49.9/F_4
PEG_RX#_0 … PEG_RX#_15 PEG_RX#0 … PEG_RX#15
PEG_RX_0 … PEG_RX_15 PEG_RX0 … PEG_RX15
int R68 *0_4 HDMI_HPD#
PEG_TX#_0 … PEG_TX#_15 C_PEG_TX#0 … C_PEG_TX#15 .1U/10V_4 PEG_TX#0 … PEG_TX#15
PEG_TX_0 … PEG_TX_15 C_PEG_TX0 … C_PEG_TX15 .1U/10V_4 PEG_TX0 … PEG_TX15
dis
For UMA HDMI Function
[12] PEG_TX#0_VGA [12] PEG_TX0_VGA RP62 *0_4P2R/S short-4p2r-0404 PEG_TX#0 PEG_TX0 RP19 *4P2R-S-0 IN_D2# [20] IN_D2 [20]
[12] PEG_TX#1_VGA [12] PEG_TX1_VGA RP63 *0_4P2R/S short-4p2r-0404 PEG_TX#1 PEG_TX1 RP17 *4P2R-S-0 IN_D1# [20] IN_D1 [20]
[12] PEG_TX#2_VGA [12] PEG_TX2_VGA RP64 *0_4P2R/S short-4p2r-0404 PEG_TX#2 PEG_TX2 RP20 *4P2R-S-0 IN_D0# [20] IN_D0 [20]
[12] PEG_TX#3_VGA [12] PEG_TX3_VGA RP65 *0_4P2R/S short-4p2r-0404 PEG_TX#3 PEG_TX3 RP18 *4P2R-S-0 IN_CLK# [20] IN_CLK [20]
For DIS VGA Function
+3V R39 *20K/F_4 HDMI_HPD# Level: 0.9V
[20] HDMI_HPD_CON R38 *100K/F_4 Q8 *ME2N7002E R43 *7.5K/F_4
HPD# Inverting Level Shifting Circuit

05/22 (PV) FOR UMA HDMI issue.
07/14 (PV2) Change footprint for PE require.

07/14 (PV2) BOM reomve R449 for UMA use.

7/16 (PV2) Change
FP for ICT.

C416,C423,C440,C431
C419,C418,C430,C424

Need to install for GM

http://hobi-elektronika.net/

PROJECT : UT7
Quanta Computer Inc.
NB5

Size	Document Number	Rev
Custom	Cantiga DMI/DISP 2/5	E3A

Date: Friday, July 18, 2008 Sheet 6 of 46

07

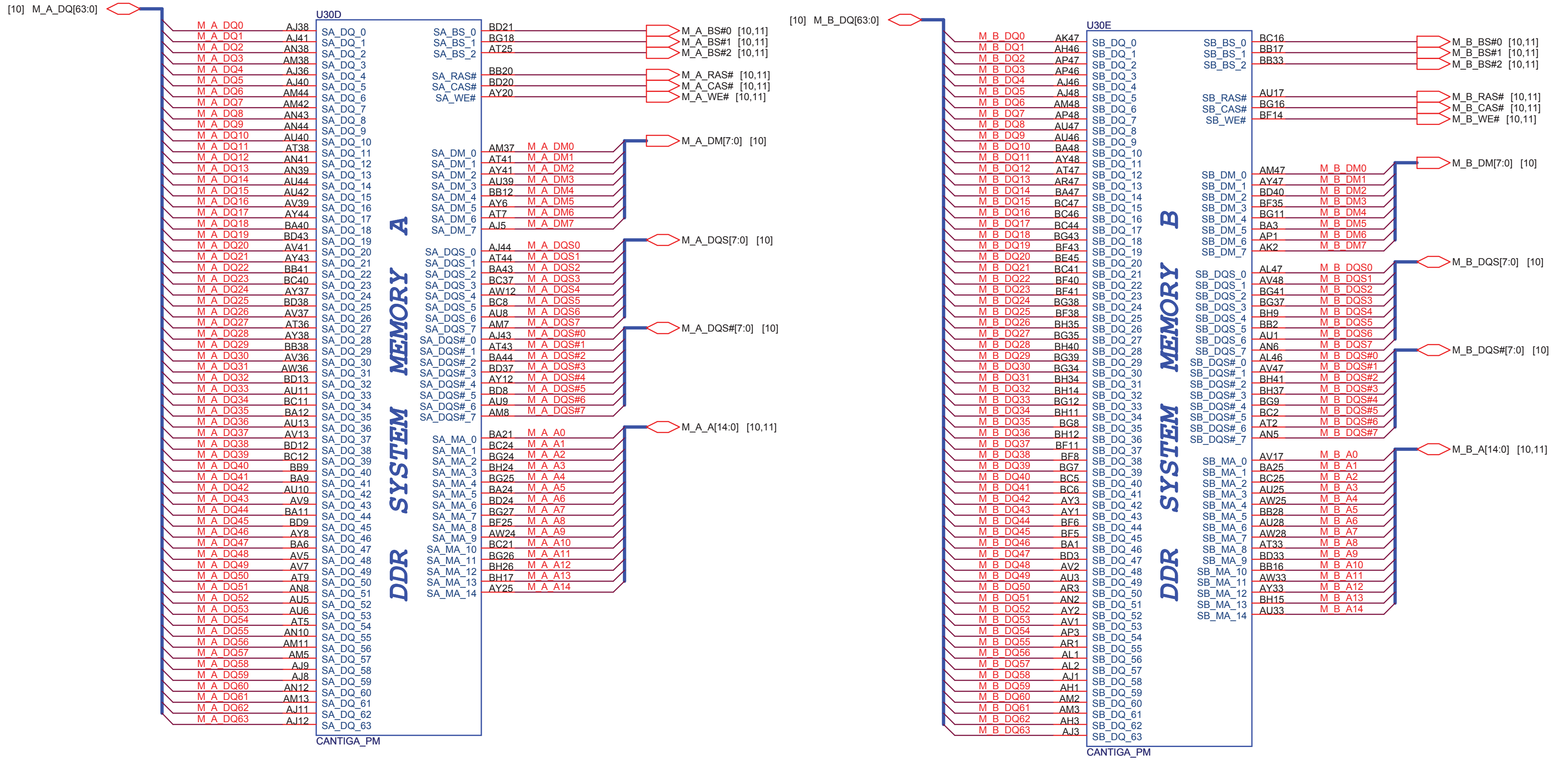
[10] M_A_DQ[63:0]
U30D
DDR SYSTEM MEMORY A
M_A_DQ0 AJ38 SA_DQ_0
M_A_DQ1 AJ41 SA_DQ_1
M_A_DQ2 AN38 SA_DQ_2
M_A_DQ3 AM38 SA_DQ_3
M_A_DQ4 AJ36 SA_DQ_4
M_A_DQ5 AJ40 SA_DQ_5
M_A_DQ6 AM44 SA_DQ_6
M_A_DQ7 AM42 SA_DQ_7
M_A_DQ8 AN43 SA_DQ_8
M_A_DQ9 AN44 SA_DQ_9
M_A_DQ10 AU40 SA_DQ_10
M_A_DQ11 AT38 SA_DQ_11
M_A_DQ12 AN41 SA_DQ_12
M_A_DQ13 AN39 SA_DQ_13
M_A_DQ14 AU44 SA_DQ_14
M_A_DQ15 AU42 SA_DQ_15
M_A_DQ16 AV39 SA_DQ_16
M_A_DQ17 AY44 SA_DQ_17
M_A_DQ18 BA40 SA_DQ_18
M_A_DQ19 BD43 SA_DQ_19
M_A_DQ20 AV41 SA_DQ_20
M_A_DQ21 AY43 SA_DQ_21
M_A_DQ22 BB41 SA_DQ_22
M_A_DQ23 BC40 SA_DQ_23
M_A_DQ24 AY37 SA_DQ_24
M_A_DQ25 BD38 SA_DQ_25
M_A_DQ26 AV37 SA_DQ_26
M_A_DQ27 AT36 SA_DQ_27
M_A_DQ28 AY38 SA_DQ_28
M_A_DQ29 BB38 SA_DQ_29
M_A_DQ30 AV36 SA_DQ_30
M_A_DQ31 AW36 SA_DQ_31
M_A_DQ32 BD13 SA_DQ_32
M_A_DQ33 AU11 SA_DQ_33
M_A_DQ34 BC11 SA_DQ_34
M_A_DQ35 BA12 SA_DQ_35
M_A_DQ36 AU13 SA_DQ_36
M_A_DQ37 AV13 SA_DQ_37
M_A_DQ38 BD12 SA_DQ_38
M_A_DQ39 BC12 SA_DQ_39
M_A_DQ40 BB9 SA_DQ_40
M_A_DQ41 BA9 SA_DQ_41
M_A_DQ42 AU10 SA_DQ_42
M_A_DQ43 AV9 SA_DQ_43
M_A_DQ44 BA11 SA_DQ_44
M_A_DQ45 BD9 SA_DQ_45
M_A_DQ46 AY8 SA_DQ_46
M_A_DQ47 BA6 SA_DQ_47
M_A_DQ48 AV5 SA_DQ_48
M_A_DQ49 AV7 SA_DQ_49
M_A_DQ50 AT9 SA_DQ_50
M_A_DQ51 AN8 SA_DQ_51
M_A_DQ52 AU5 SA_DQ_52
M_A_DQ53 AU6 SA_DQ_53
M_A_DQ54 AT5 SA_DQ_54
M_A_DQ55 AN10 SA_DQ_55
M_A_DQ56 AM11 SA_DQ_56
M_A_DQ57 AM5 SA_DQ_57
M_A_DQ58 AJ9 SA_DQ_58
M_A_DQ59 AJ8 SA_DQ_59
M_A_DQ60 AN12 SA_DQ_60
M_A_DQ61 AM13 SA_DQ_61
M_A_DQ62 AJ11 SA_DQ_62
M_A_DQ63 AJ12 SA_DQ_63
CANTIGA_PM
SA_BS_0 BD21 M_A_BS#0 [10,11]
SA_BS_1 BG18 M_A_BS#1 [10,11]
SA_BS_2 AT25 M_A_BS#2 [10,11]
SA_RAS# BB20 M_A_RAS# [10,11]
SA_CAS# BD20 M_A_CAS# [10,11]
SA_WE# AY20 M_A_WE# [10,11]
SA_DM_0 AM37 M_A_DM0
SA_DM_1 AT41 M_A_DM1
SA_DM_2 AY41 M_A_DM2
SA_DM_3 AU39 M_A_DM3
SA_DM_4 BB12 M_A_DM4
SA_DM_5 AY6 M_A_DM5
SA_DM_6 AT7 M_A_DM6
SA_DM_7 AJ5 M_A_DM7
M_A_DM[7:0] [10]
SA_DQS_0 AJ44 M_A_DQS0
SA_DQS_1 AT44 M_A_DQS1
SA_DQS_2 BA43 M_A_DQS2
SA_DQS_3 BC37 M_A_DQS3
SA_DQS_4 AW12 M_A_DQS4
SA_DQS_5 BC8 M_A_DQS5
SA_DQS_6 AU8 M_A_DQS6
SA_DQS_7 AM7 M_A_DQS7
M_A_DQS[7:0] [10]
SA_DQS#_0 AJ43 M_A_DQS#0
SA_DQS#_1 AT43 M_A_DQS#1
SA_DQS#_2 BA44 M_A_DQS#2
SA_DQS#_3 BD37 M_A_DQS#3
SA_DQS#_4 AY12 M_A_DQS#4
SA_DQS#_5 BD8 M_A_DQS#5
SA_DQS#_6 AU9 M_A_DQS#6
SA_DQS#_7 AM8 M_A_DQS#7
M_A_DQS#[7:0] [10]
SA_MA_0 BA21 M_A_A0
SA_MA_1 BC24 M_A_A1
SA_MA_2 BG24 M_A_A2
SA_MA_3 BH24 M_A_A3
SA_MA_4 BG25 M_A_A4
SA_MA_5 BA24 M_A_A5
SA_MA_6 BD24 M_A_A6
SA_MA_7 BG27 M_A_A7
SA_MA_8 BF25 M_A_A8
SA_MA_9 AW24 M_A_A9
SA_MA_10 BC21 M_A_A10
SA_MA_11 BG26 M_A_A11
SA_MA_12 BH26 M_A_A12
SA_MA_13 BH17 M_A_A13
SA_MA_14 AY25 M_A_A14
M_A_A[14:0] [10,11]
[10] M_B_DQ[63:0]
U30E
DDR SYSTEM MEMORY B
M_B_DQ0 AK47 SB_DQ_0
M_B_DQ1 AH46 SB_DQ_1
M_B_DQ2 AP47 SB_DQ_2
M_B_DQ3 AP46 SB_DQ_3
M_B_DQ4 AJ46 SB_DQ_4
M_B_DQ5 AJ48 SB_DQ_5
M_B_DQ6 AM48 SB_DQ_6
M_B_DQ7 AP48 SB_DQ_7
M_B_DQ8 AU47 SB_DQ_8
M_B_DQ9 AU46 SB_DQ_9
M_B_DQ10 BA48 SB_DQ_10
M_B_DQ11 AY48 SB_DQ_11
M_B_DQ12 AT47 SB_DQ_12
M_B_DQ13 AR47 SB_DQ_13
M_B_DQ14 BA47 SB_DQ_14
M_B_DQ15 BC47 SB_DQ_15
M_B_DQ16 BC46 SB_DQ_16
M_B_DQ17 BC44 SB_DQ_17
M_B_DQ18 BG43 SB_DQ_18
M_B_DQ19 BF43 SB_DQ_19
M_B_DQ20 BE45 SB_DQ_20
M_B_DQ21 BC41 SB_DQ_21
M_B_DQ22 BF40 SB_DQ_22
M_B_DQ23 BF41 SB_DQ_23
M_B_DQ24 BG38 SB_DQ_24
M_B_DQ25 BF38 SB_DQ_25
M_B_DQ26 BH35 SB_DQ_26
M_B_DQ27 BG35 SB_DQ_27
M_B_DQ28 BH40 SB_DQ_28
M_B_DQ29 BG39 SB_DQ_29
M_B_DQ30 BG34 SB_DQ_30
M_B_DQ31 BH34 SB_DQ_31
M_B_DQ32 BH14 SB_DQ_32
M_B_DQ33 BG12 SB_DQ_33
M_B_DQ34 BH11 SB_DQ_34
M_B_DQ35 BG8 SB_DQ_35
M_B_DQ36 BH12 SB_DQ_36
M_B_DQ37 BF11 SB_DQ_37
M_B_DQ38 BF8 SB_DQ_38
M_B_DQ39 BG7 SB_DQ_39
M_B_DQ40 BC5 SB_DQ_40
M_B_DQ41 BC6 SB_DQ_41
M_B_DQ42 AY3 SB_DQ_42
M_B_DQ43 AY1 SB_DQ_43
M_B_DQ44 BF6 SB_DQ_44
M_B_DQ45 BF5 SB_DQ_45
M_B_DQ46 BA1 SB_DQ_46
M_B_DQ47 BD3 SB_DQ_47
M_B_DQ48 AV2 SB_DQ_48
M_B_DQ49 AU3 SB_DQ_49
M_B_DQ50 AR3 SB_DQ_50
M_B_DQ51 AN2 SB_DQ_51
M_B_DQ52 AY2 SB_DQ_52
M_B_DQ53 AV1 SB_DQ_53
M_B_DQ54 AP3 SB_DQ_54
M_B_DQ55 AR1 SB_DQ_55
M_B_DQ56 AL1 SB_DQ_56
M_B_DQ57 AL2 SB_DQ_57
M_B_DQ58 AJ1 SB_DQ_58
M_B_DQ59 AH1 SB_DQ_59
M_B_DQ60 AM2 SB_DQ_60
M_B_DQ61 AM3 SB_DQ_61
M_B_DQ62 AH3 SB_DQ_62
M_B_DQ63 AJ3 SB_DQ_63
CANTIGA_PM
SB_BS_0 BC16 M_B_BS#0 [10,11]
SB_BS_1 BB17 M_B_BS#1 [10,11]
SB_BS_2 BB33 M_B_BS#2 [10,11]
SB_RAS# AU17 M_B_RAS# [10,11]
SB_CAS# BG16 M_B_CAS# [10,11]
SB_WE# BF14 M_B_WE# [10,11]
SB_DM_0 AM47 M_B_DM0
SB_DM_1 AY47 M_B_DM1
SB_DM_2 BD40 M_B_DM2
SB_DM_3 BF35 M_B_DM3
SB_DM_4 BG11 M_B_DM4
SB_DM_5 BA3 M_B_DM5
SB_DM_6 AP1 M_B_DM6
SB_DM_7 AK2 M_B_DM7
M_B_DM[7:0] [10]
SB_DQS_0 AL47 M_B_DQS0
SB_DQS_1 AV48 M_B_DQS1
SB_DQS_2 BG41 M_B_DQS2
SB_DQS_3 BG37 M_B_DQS3
SB_DQS_4 BH9 M_B_DQS4
SB_DQS_5 BB2 M_B_DQS5
SB_DQS_6 AU1 M_B_DQS6
SB_DQS_7 AN6 M_B_DQS7
M_B_DQS[7:0] [10]
SB_DQS#_0 AL46 M_B_DQS#0
SB_DQS#_1 AV47 M_B_DQS#1
SB_DQS#_2 BH41 M_B_DQS#2
SB_DQS#_3 BH37 M_B_DQS#3
SB_DQS#_4 BG9 M_B_DQS#4
SB_DQS#_5 BC2 M_B_DQS#5
SB_DQS#_6 AT2 M_B_DQS#6
SB_DQS#_7 AN5 M_B_DQS#7
M_B_DQS#[7:0] [10]
SB_MA_0 AV17 M_B_A0
SB_MA_1 BA25 M_B_A1
SB_MA_2 BC25 M_B_A2
SB_MA_3 AU25 M_B_A3
SB_MA_4 AW25 M_B_A4
SB_MA_5 BB28 M_B_A5
SB_MA_6 AU28 M_B_A6
SB_MA_7 AW28 M_B_A7
SB_MA_8 AT33 M_B_A8
SB_MA_9 BD33 M_B_A9
SB_MA_10 BB16 M_B_A10
SB_MA_11 AW33 M_B_A11
SB_MA_12 AY33 M_B_A12
SB_MA_13 BH15 M_B_A13
SB_MA_14 AU33 M_B_A14
M_B_A[14:0] [10,11]

PROJECT : UT7
Quanta Computer Inc.

NB5

Size	Document Number	Rev
Custom	**Cantiga DDR2 3/5**	E3A

Date: Friday, July 18, 2008 Sheet 7 of 46

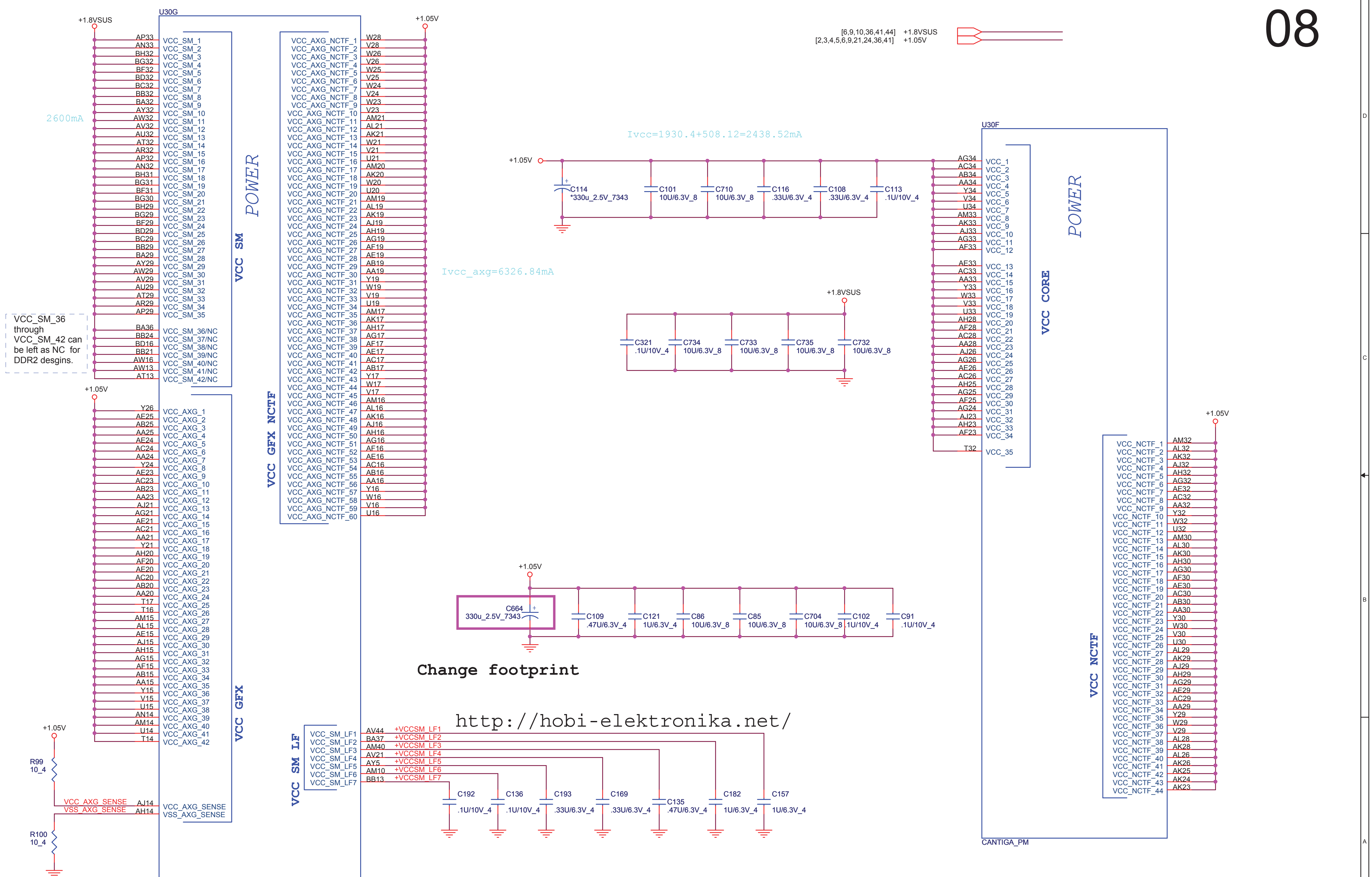
[6,9,10,36,41,44] +1.8VSUS
[2,3,4,5,6,9,21,24,36,41] +1.05V
U30G
+1.8VSUS
2600mA
AP33 VCC_SM_1
AN33 VCC_SM_2
BH32 VCC_SM_3
BG32 VCC_SM_4
BF32 VCC_SM_5
BD32 VCC_SM_6
BC32 VCC_SM_7
BB32 VCC_SM_8
BA32 VCC_SM_9
AY32 VCC_SM_10
AW32 VCC_SM_11
AV32 VCC_SM_12
AU32 VCC_SM_13
AT32 VCC_SM_14
AR32 VCC_SM_15
AP32 VCC_SM_16
AN32 VCC_SM_17
BH31 VCC_SM_18
BG31 VCC_SM_19
BF31 VCC_SM_20
BG30 VCC_SM_21
BH29 VCC_SM_22
BG29 VCC_SM_23
BF29 VCC_SM_24
BD29 VCC_SM_25
BC29 VCC_SM_26
BB29 VCC_SM_27
BA29 VCC_SM_28
AY29 VCC_SM_29
AW29 VCC_SM_30
AV29 VCC_SM_31
AU29 VCC_SM_32
AT29 VCC_SM_33
AR29 VCC_SM_34
AP29 VCC_SM_35
BA36 VCC_SM_36/NC
BB24 VCC_SM_37/NC
BD16 VCC_SM_38/NC
BB21 VCC_SM_39/NC
AW16 VCC_SM_40/NC
AW13 VCC_SM_41/NC
AT13 VCC_SM_42/NC
VCC_SM_36 through VCC_SM_42 can be left as NC for DDR2 desgins.
POWER
VCC SM
+1.05V
Y26 VCC_AXG_1
AE25 VCC_AXG_2
AB25 VCC_AXG_3
AA25 VCC_AXG_4
AE24 VCC_AXG_5
AC24 VCC_AXG_6
AA24 VCC_AXG_7
Y24 VCC_AXG_8
AE23 VCC_AXG_9
AC23 VCC_AXG_10
AB23 VCC_AXG_11
AA23 VCC_AXG_12
AJ21 VCC_AXG_13
AG21 VCC_AXG_14
AE21 VCC_AXG_15
AC21 VCC_AXG_16
AA21 VCC_AXG_17
Y21 VCC_AXG_18
AH20 VCC_AXG_19
AF20 VCC_AXG_20
AE20 VCC_AXG_21
AC20 VCC_AXG_22
AB20 VCC_AXG_23
AA20 VCC_AXG_24
T17 VCC_AXG_25
T16 VCC_AXG_26
AM15 VCC_AXG_27
AL15 VCC_AXG_28
AE15 VCC_AXG_29
AJ15 VCC_AXG_30
AH15 VCC_AXG_31
AG15 VCC_AXG_32
AF15 VCC_AXG_33
AB15 VCC_AXG_34
AA15 VCC_AXG_35
Y15 VCC_AXG_36
V15 VCC_AXG_37
U15 VCC_AXG_38
AN14 VCC_AXG_39
AM14 VCC_AXG_40
U14 VCC_AXG_41
T14 VCC_AXG_42
VCC GFX
+1.05V
R99
10_4
VCC_AXG_SENSE AJ14 VCC_AXG_SENSE
VSS_AXG_SENSE AH14 VSS_AXG_SENSE
R100
10_4
CANTIGA_PM
+1.05V
VCC_AXG_NCTF_1 W28
VCC_AXG_NCTF_2 V28
VCC_AXG_NCTF_3 W26
VCC_AXG_NCTF_4 V26
VCC_AXG_NCTF_5 W25
VCC_AXG_NCTF_6 V25
VCC_AXG_NCTF_7 W24
VCC_AXG_NCTF_8 V24
VCC_AXG_NCTF_9 W23
VCC_AXG_NCTF_10 V23
VCC_AXG_NCTF_11 AM21
VCC_AXG_NCTF_12 AL21
VCC_AXG_NCTF_13 AK21
VCC_AXG_NCTF_14 W21
VCC_AXG_NCTF_15 V21
VCC_AXG_NCTF_16 U21
VCC_AXG_NCTF_17 AM20
VCC_AXG_NCTF_18 AK20
VCC_AXG_NCTF_19 W20
VCC_AXG_NCTF_20 U20
VCC_AXG_NCTF_21 AM19
VCC_AXG_NCTF_22 AL19
VCC_AXG_NCTF_23 AK19
VCC_AXG_NCTF_24 AJ19
VCC_AXG_NCTF_25 AH19
VCC_AXG_NCTF_26 AG19
VCC_AXG_NCTF_27 AF19
VCC_AXG_NCTF_28 AE19
VCC_AXG_NCTF_29 AB19
VCC_AXG_NCTF_30 AA19
VCC_AXG_NCTF_31 Y19
VCC_AXG_NCTF_32 W19
VCC_AXG_NCTF_33 V19
VCC_AXG_NCTF_34 U19
VCC_AXG_NCTF_35 AM17
VCC_AXG_NCTF_36 AK17
VCC_AXG_NCTF_37 AH17
VCC_AXG_NCTF_38 AG17
VCC_AXG_NCTF_39 AF17
VCC_AXG_NCTF_40 AE17
VCC_AXG_NCTF_41 AC17
VCC_AXG_NCTF_42 AB17
VCC_AXG_NCTF_43 Y17
VCC_AXG_NCTF_44 W17
VCC_AXG_NCTF_45 V17
VCC_AXG_NCTF_46 AM16
VCC_AXG_NCTF_47 AL16
VCC_AXG_NCTF_48 AK16
VCC_AXG_NCTF_49 AJ16
VCC_AXG_NCTF_50 AH16
VCC_AXG_NCTF_51 AG16
VCC_AXG_NCTF_52 AF16
VCC_AXG_NCTF_53 AE16
VCC_AXG_NCTF_54 AC16
VCC_AXG_NCTF_55 AB16
VCC_AXG_NCTF_56 AA16
VCC_AXG_NCTF_57 Y16
VCC_AXG_NCTF_58 W16
VCC_AXG_NCTF_59 V16
VCC_AXG_NCTF_60 U16
VCC GFX NCTF
Ivcc_axg=6326.84mA
VCC_SM_LF1 AV44 +VCCSM_LF1
VCC_SM_LF2 BA37 +VCCSM_LF2
VCC_SM_LF3 AM40 +VCCSM_LF3
VCC_SM_LF4 AV21 +VCCSM_LF4
VCC_SM_LF5 AY5 +VCCSM_LF5
VCC_SM_LF6 AM10 +VCCSM_LF6
VCC_SM_LF7 BB13 +VCCSM_LF7
VCC SM LF
C192 .1U/10V_4
C136 .1U/10V_4
C193 .33U/6.3V_4
C169 .33U/6.3V_4
C135 .47U/6.3V_4
C182 1U/6.3V_4
C157 1U/6.3V_4
http://hobi-elektronika.net/
Ivcc=1930.4+508.12=2438.52mA
+1.05V
C114 *330u_2.5V_7343
C101 10U/6.3V_8
C710 10U/6.3V_8
C116 .33U/6.3V_4
C108 .33U/6.3V_4
C113 .1U/10V_4
+1.8VSUS
C321 .1U/10V_4
C734 10U/6.3V_8
C733 10U/6.3V_8
C735 10U/6.3V_8
C732 10U/6.3V_8
+1.05V
C664 330u_2.5V_7343
C109 .47U/6.3V_4
C121 1U/6.3V_4
C86 10U/6.3V_8
C85 10U/6.3V_8
C704 10U/6.3V_8
C102 1U/10V_4
C91 .1U/10V_4
Change footprint
U30F
AG34 VCC_1
AC34 VCC_2
AB34 VCC_3
AA34 VCC_4
Y34 VCC_5
V34 VCC_6
U34 VCC_7
AM33 VCC_8
AK33 VCC_9
AJ33 VCC_10
AG33 VCC_11
AF33 VCC_12
AE33 VCC_13
AC33 VCC_14
AA33 VCC_15
Y33 VCC_16
W33 VCC_17
V33 VCC_18
U33 VCC_19
AH28 VCC_20
AF28 VCC_21
AC28 VCC_22
AA28 VCC_23
AJ26 VCC_24
AG26 VCC_25
AE26 VCC_26
AC26 VCC_27
AH25 VCC_28
AG25 VCC_29
AF25 VCC_30
AG24 VCC_31
AJ23 VCC_32
AH23 VCC_33
AF23 VCC_34
T32 VCC_35
POWER
VCC CORE
+1.05V
VCC_NCTF_1 AM32
VCC_NCTF_2 AL32
VCC_NCTF_3 AK32
VCC_NCTF_4 AJ32
VCC_NCTF_5 AH32
VCC_NCTF_6 AG32
VCC_NCTF_7 AF32
VCC_NCTF_8 AC32
VCC_NCTF_9 AA32
VCC_NCTF_10 Y32
VCC_NCTF_11 W32
VCC_NCTF_12 U32
VCC_NCTF_13 AM30
VCC_NCTF_14 AL30
VCC_NCTF_15 AK30
VCC_NCTF_16 AH30
VCC_NCTF_17 AG30
VCC_NCTF_18 AF30
VCC_NCTF_19 AE30
VCC_NCTF_20 AC30
VCC_NCTF_21 AB30
VCC_NCTF_22 AA30
VCC_NCTF_23 Y30
VCC_NCTF_24 W30
VCC_NCTF_25 V30
VCC_NCTF_26 U30
VCC_NCTF_27 AL29
VCC_NCTF_28 AK29
VCC_NCTF_29 AJ29
VCC_NCTF_30 AH29
VCC_NCTF_31 AG29
VCC_NCTF_32 AE29
VCC_NCTF_33 AC29
VCC_NCTF_34 AA29
VCC_NCTF_35 Y29
VCC_NCTF_36 W29
VCC_NCTF_37 V29
VCC_NCTF_38 AL28
VCC_NCTF_39 AK28
VCC_NCTF_40 AL26
VCC_NCTF_41 AK26
VCC_NCTF_42 AK25
VCC_NCTF_43 AK24
VCC_NCTF_44 AK23
VCC NCTF
CANTIGA_PM

PROJECT : UT7
Quanta Computer Inc.

NB5

Size	Document Number	Rev
Custom	Cantiga Vcc 4/5	E3A

Date: Friday, July 18, 2008 | Sheet 8 of 46

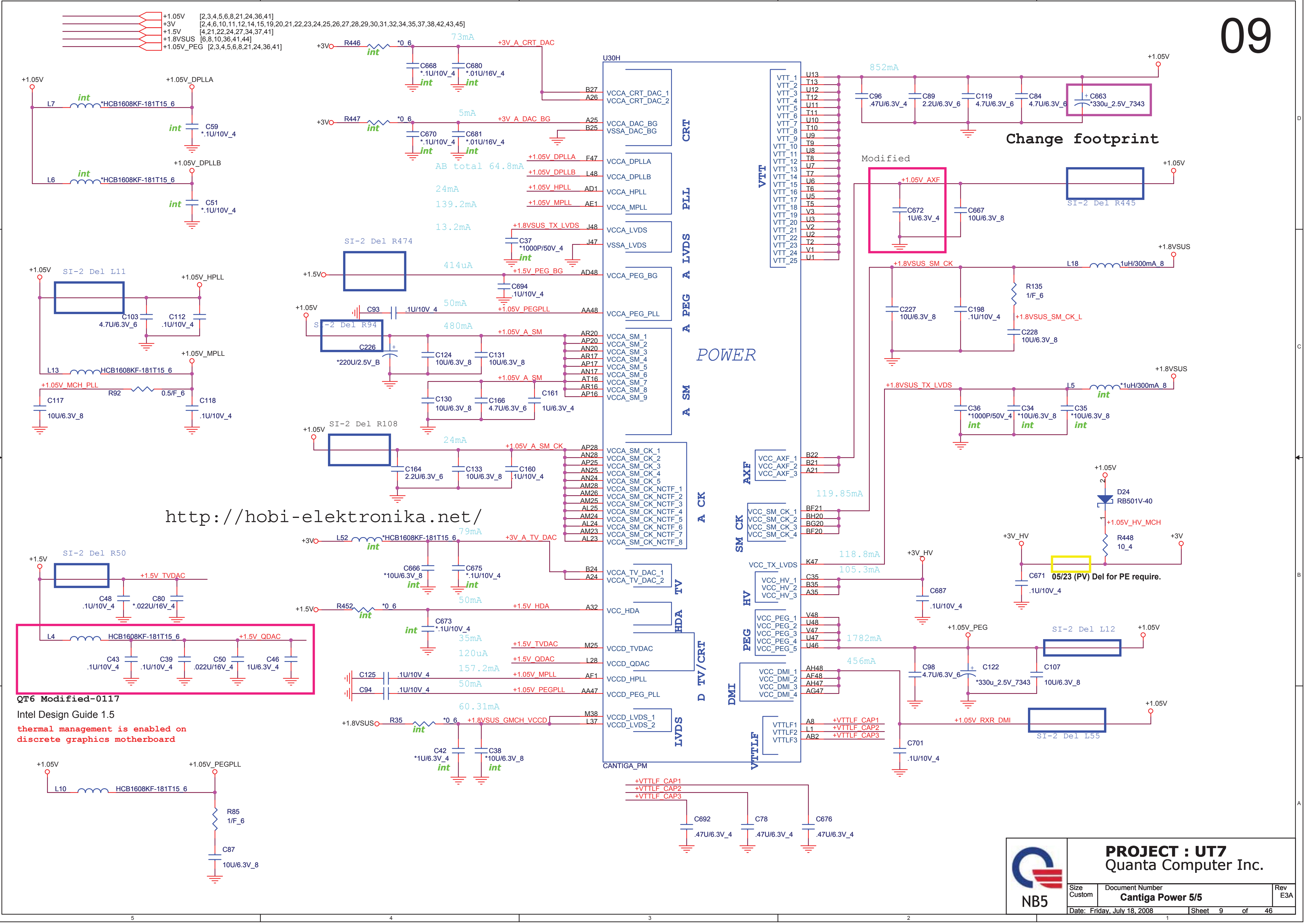
+1.05V [2,3,4,5,6,8,21,24,36,41]
+3V [2,4,6,10,11,12,14,15,19,20,21,22,23,24,25,26,27,28,29,30,31,32,34,35,37,38,42,43,45]
+1.5V [4,21,22,24,27,34,37,41]
+1.8VSUS [6,8,10,36,41,44]
+1.05V_PEG [2,3,4,5,6,8,21,24,36,41]
U30H
CANTIGA_PM
POWER
CRT
PLL
LVDS
A PEG
A SM
A CK
TV
HDA
D TV/CRT
LVDS
VTT
AXF
SM CK
HV
PEG
DMI
VTTLF
VCCA_CRT_DAC_1
VCCA_CRT_DAC_2
VCCA_DAC_BG
VSSA_DAC_BG
VCCA_DPLLA
VCCA_DPLLB
VCCA_HPLL
VCCA_MPLL
VCCA_LVDS
VSSA_LVDS
VCCA_PEG_BG
VCCA_PEG_PLL
VCCA_SM_1 … VCCA_SM_9
VCCA_SM_CK_1 … VCCA_SM_CK_5
VCCA_SM_CK_NCTF_1 … VCCA_SM_CK_NCTF_8
VCCA_TV_DAC_1
VCCA_TV_DAC_2
VCC_HDA
VCCD_TVDAC
VCCD_QDAC
VCCD_HPLL
VCCD_PEG_PLL
VCCD_LVDS_1
VCCD_LVDS_2
VTT_1 … VTT_25
VCC_AXF_1
VCC_AXF_2
VCC_AXF_3
VCC_SM_CK_1 … VCC_SM_CK_4
VCC_TX_LVDS
VCC_HV_1
VCC_HV_2
VCC_HV_3
VCC_PEG_1 … VCC_PEG_5
VCC_DMI_1 … VCC_DMI_4
VTTLF1
VTTLF2
VTTLF3
73mA
5mA
AB total 64.8mA
24mA
139.2mA
13.2mA
414uA
50mA
480mA
24mA
79mA
50mA
35mA
120uA
157.2mA
50mA
60.31mA
852mA
119.85mA
118.8mA
105.3mA
1782mA
456mA
+3V_A_CRT_DAC
+3V_A_DAC_BG
+1.05V_DPLLA
+1.05V_DPLLB
+1.05V_HPLL
+1.05V_MPLL
+1.8VSUS_TX_LVDS
+1.5V_PEG_BG
+1.05V_PEGPLL
+1.05V_A_SM
+1.05V_A_SM_CK
+3V_A_TV_DAC
+1.5V_HDA
+1.5V_TVDAC
+1.5V_QDAC
+1.05V_MCH_PLL
+1.8VSUS_GMCH_VCCD
+1.05V_AXF
+1.8VSUS_SM_CK
+1.8VSUS_SM_CK_L
+1.05V_HV_MCH
+1.05V_RXR_DMI
+VTTLF_CAP1
+VTTLF_CAP2
+VTTLF_CAP3
R446 *0_6
R447 *0_6
R452 *0_6
R35 *0_6
R92 0.5/F_6
R85 1/F_6
R135 1/F_6
R448 10_4
L7 *HCB1608KF-181T15_6
L6 *HCB1608KF-181T15_6
L13 HCB1608KF-181T15_6
L4 HCB1608KF-181T15_6
L10 HCB1608KF-181T15_6
L52 *HCB1608KF-181T15_6
L18 1uH/300mA_8
L5 *1uH/300mA_8
D24 RB501V-40
C663 *330u_2.5V_7343
C122 *330u_2.5V_7343
C226 *220U/2.5V_B
int
SI-2 Del L11
SI-2 Del R474
SI-2 Del R94
SI-2 Del R108
SI-2 Del R50
SI-2 Del R445
SI-2 Del L12
SI-2 Del L55
Change footprint
Modified
05/23 (PV) Del for PE require.
http://hobi-elektronika.net/

QT6 Modified-0117

Intel Design Guide 1.5

thermal management is enabled on discrete graphics motherboard

NB5

PROJECT : UT7
Quanta Computer Inc.

Size	Document Number	Rev
Custom	Cantiga Power 5/5	E3A

Date: Friday, July 18, 2008 | Sheet 9 of 46

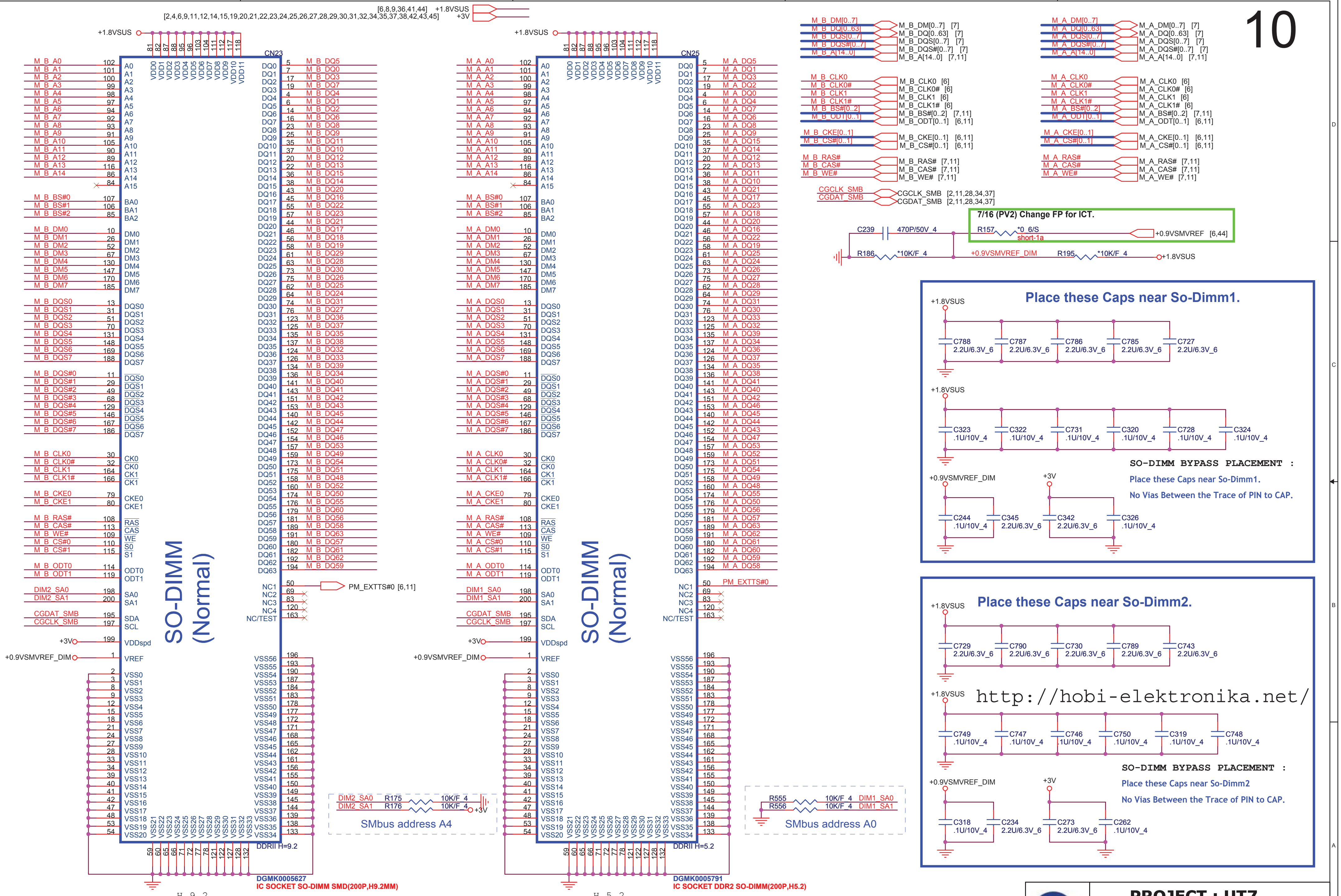
[6,8,9,36,41,44] +1.8VSUS
[2,4,6,9,11,12,14,15,19,20,21,22,23,24,25,26,27,28,29,30,31,32,34,35,37,38,42,43,45] +3V
+1.8VSUS
CN23
CN25
SO-DIMM
(Normal)
PM_EXTTS#0 [6,11]
M_B_DM[0..7] [7]
M_B_DQ[0..63] [7]
M_B_DQS[0..7] [7]
M_B_DQS#[0..7] [7]
M_B_A[14..0] [7,11]
M_A_DM[0..7] [7]
M_A_DQ[0..63] [7]
M_A_DQS[0..7] [7]
M_A_DQS#[0..7] [7]
M_A_A[14..0] [7,11]
M_B_CLK0 [6]
M_B_CLK0# [6]
M_B_CLK1 [6]
M_B_CLK1# [6]
M_B_BS#[0..2] [7,11]
M_B_ODT[0..1] [6,11]
M_A_CLK0 [6]
M_A_CLK0# [6]
M_A_CLK1 [6]
M_A_CLK1# [6]
M_A_BS#[0..2] [7,11]
M_A_ODT[0..1] [6,11]
M_B_CKE[0..1] [6,11]
M_B_CS#[0..1] [6,11]
M_A_CKE[0..1] [6,11]
M_A_CS#[0..1] [6,11]
M_B_RAS# [7,11]
M_B_CAS# [7,11]
M_B_WE# [7,11]
M_A_RAS# [7,11]
M_A_CAS# [7,11]
M_A_WE# [7,11]
CGCLK_SMB [2,11,28,34,37]
CGDAT_SMB [2,11,28,34,37]
7/16 (PV2) Change FP for ICT.
C239 470P/50V_4
R157 *0_6/S short-1a
+0.9VSMVREF [6,44]
R186 *10K/F_4
+0.9VSMVREF_DIM
R195 *10K/F_4
+1.8VSUS
Place these Caps near So-Dimm1.
C788 2.2U/6.3V_6
C787 2.2U/6.3V_6
C786 2.2U/6.3V_6
C785 2.2U/6.3V_6
C727 2.2U/6.3V_6
C323 .1U/10V_4
C322 .1U/10V_4
C731 .1U/10V_4
C320 .1U/10V_4
C728 .1U/10V_4
C324 .1U/10V_4
SO-DIMM BYPASS PLACEMENT :
Place these Caps near So-Dimm1.
No Vias Between the Trace of PIN to CAP.
C244 .1U/10V_4
C345 2.2U/6.3V_6
C342 2.2U/6.3V_6
C326 .1U/10V_4
Place these Caps near So-Dimm2.
C729 2.2U/6.3V_6
C790 2.2U/6.3V_6
C730 2.2U/6.3V_6
C789 2.2U/6.3V_6
C743 2.2U/6.3V_6
http://hobi-elektronika.net/
C749 .1U/10V_4
C747 .1U/10V_4
C746 .1U/10V_4
C750 .1U/10V_4
C319 .1U/10V_4
C748 .1U/10V_4
SO-DIMM BYPASS PLACEMENT :
Place these Caps near So-Dimm2
No Vias Between the Trace of PIN to CAP.
C318 .1U/10V_4
C234 2.2U/6.3V_6
C273 2.2U/6.3V_6
C262 .1U/10V_4
DIM2_SA0 R175 10K/F_4
DIM2_SA1 R176 10K/F_4
SMbus address A4
R555 10K/F_4 DIM1_SA0
R556 10K/F_4 DIM1_SA1
SMbus address A0
DDRII H=9.2
DGMK0005627
IC SOCKET SO-DIMM SMD(200P,H9.2MM)
DDRII H=5.2
DGMK0005791
IC SOCKET DDR2 SO-DIMM(200P,H5.2)
H 9.2
H 5.2

SI modified

Footprint: "ddr-1-1775859-1-200p-ldv"

SI modified

Footprint: "DDR-1-1734075-1-200P"

NB5

PROJECT : UT7
Quanta Computer Inc.

Size	Document Number	Rev
Custom	DDR2 DIMM	E3A

Date: Friday, July 18, 2008 Sheet 10 of 46

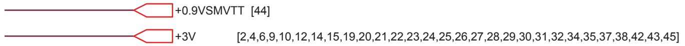

+0.9VSMVTT [44]
+3V [2,4,6,9,10,12,14,15,19,20,21,22,23,24,25,26,27,28,29,30,31,32,34,35,37,38,42,43,45]

DDRII DUAL CHANNEL A,B.

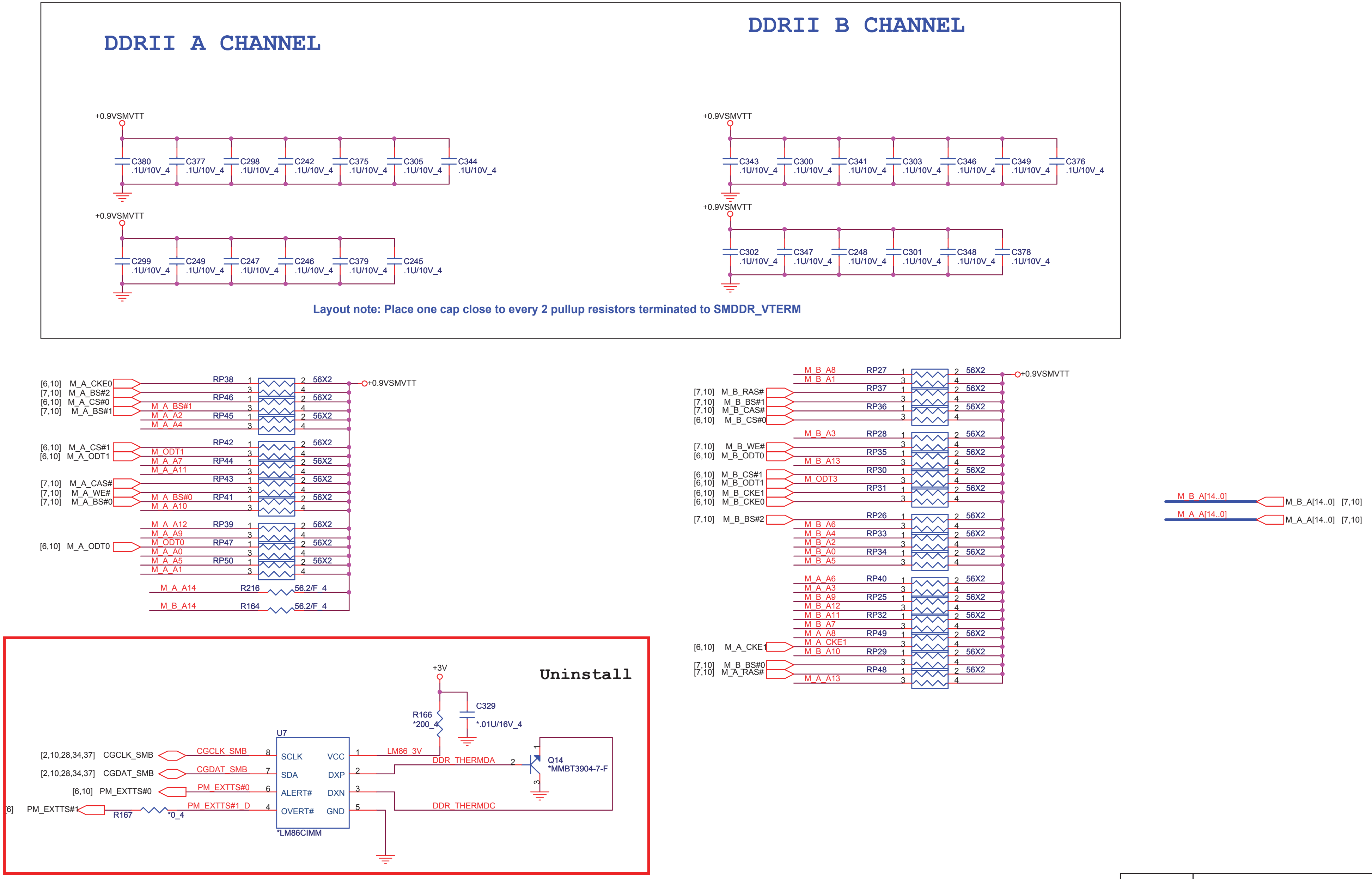

DDRII A CHANNEL
DDRII B CHANNEL
+0.9VSMVTT
C380 .1U/10V_4
C377 .1U/10V_4
C298 .1U/10V_4
C242 .1U/10V_4
C375 .1U/10V_4
C305 .1U/10V_4
C344 .1U/10V_4
C299 .1U/10V_4
C249 .1U/10V_4
C247 .1U/10V_4
C246 .1U/10V_4
C379 .1U/10V_4
C245 .1U/10V_4
C343 .1U/10V_4
C300 .1U/10V_4
C341 .1U/10V_4
C303 .1U/10V_4
C346 .1U/10V_4
C349 .1U/10V_4
C376 .1U/10V_4
C302 .1U/10V_4
C347 .1U/10V_4
C248 .1U/10V_4
C301 .1U/10V_4
C348 .1U/10V_4
C378 .1U/10V_4
Layout note: Place one cap close to every 2 pullup resistors terminated to SMDDR_VTERM
[6,10] M_A_CKE0
[7,10] M_A_BS#2
[6,10] M_A_CS#0
[7,10] M_A_BS#1
M_A_BS#1
M_A_A2
M_A_A4
RP38 56X2
RP46 56X2
RP45 56X2
[6,10] M_A_CS#1
[6,10] M_A_ODT1
M_ODT1
M_A_A7
M_A_A11
RP42 56X2
RP44 56X2
[7,10] M_A_CAS#
[7,10] M_A_WE#
[7,10] M_A_BS#0
M_A_BS#0
M_A_A10
RP43 56X2
RP41 56X2
M_A_A12
M_A_A9
[6,10] M_A_ODT0
M_ODT0
M_A_A0
M_A_A5
M_A_A1
RP39 56X2
RP47 56X2
RP50 56X2
M_A_A14 R216 56.2/F_4
M_B_A14 R164 56.2/F_4
M_B_A8
M_B_A1
RP27 56X2
[7,10] M_B_RAS#
[7,10] M_B_BS#1
[7,10] M_B_CAS#
[6,10] M_B_CS#0
RP37 56X2
RP36 56X2
M_B_A3
RP28 56X2
[7,10] M_B_WE#
[6,10] M_B_ODT0
M_B_A13
RP35 56X2
[6,10] M_B_CS#1
[6,10] M_B_ODT1
[6,10] M_B_CKE1
[6,10] M_B_CKE0
M_ODT3
RP30 56X2
RP31 56X2
[7,10] M_B_BS#2
M_B_A6
M_B_A4
M_B_A2
M_B_A0
M_B_A5
RP26 56X2
RP33 56X2
RP34 56X2
M_A_A6
M_A_A3
M_B_A9
M_B_A12
M_B_A11
M_B_A7
M_A_A8
M_A_CKE1
M_B_A10
M_A_A13
RP40 56X2
RP25 56X2
RP32 56X2
RP49 56X2
RP29 56X2
RP48 56X2
[6,10] M_A_CKE1
[7,10] M_B_BS#0
[7,10] M_A_RAS#
M_B_A[14..0]
M_B_A[14..0] [7,10]
M_A_A[14..0]
M_A_A[14..0] [7,10]
Uninstall
+3V
R166 *200_4
C329 *.01U/16V_4
U7
*LM86CIMM
SCLK
SDA
ALERT#
OVERT#
VCC
DXP
DXN
GND
[2,10,28,34,37] CGCLK_SMB
[2,10,28,34,37] CGDAT_SMB
[6,10] PM_EXTTS#0
[6] PM_EXTTS#1
CGCLK_SMB
CGDAT_SMB
PM_EXTTS#0
PM_EXTTS#1_D
R167 *0_4
LM86_3V
DDR_THERMDA
DDR_THERMDC
Q14 *MMBT3904-7-F

PROJECT : QT6
Quanta Computer Inc.

NB5

Size	Document Number	Rev
Custom	**DDR2 termination**	E3A

Date: Friday, July 18, 2008 | Sheet 11 of 46

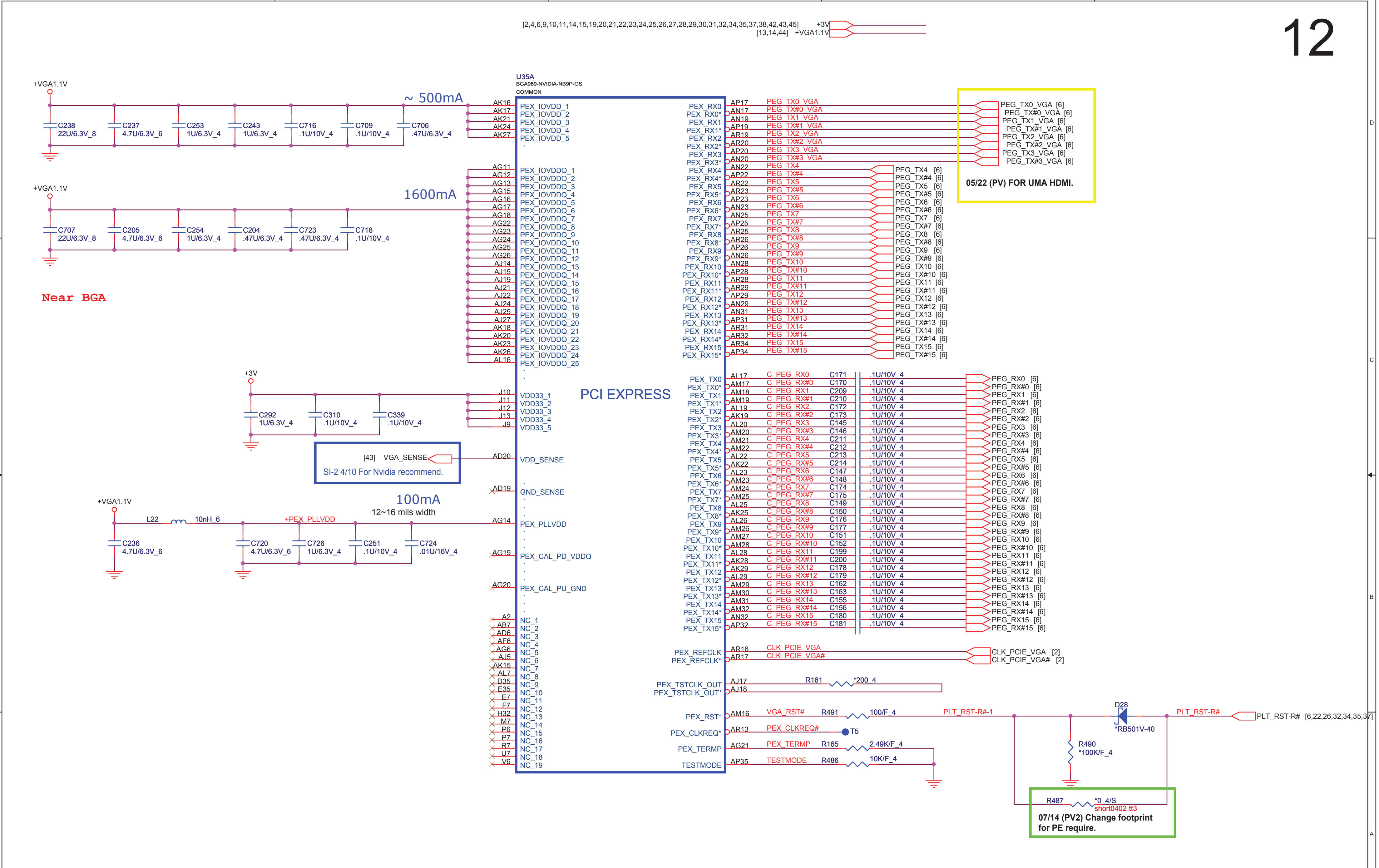
[2,4,6,9,10,11,14,15,19,20,21,22,23,24,25,26,27,28,29,30,31,32,34,35,37,38,42,43,45] +3V
[13,14,44] +VGA1.1V
U35A
BGA969-NVIDIA-NB9P-GS
COMMON
PCI EXPRESS
+VGA1.1V
~ 500mA
C238 22U/6.3V_8
C237 4.7U/6.3V_6
C253 1U/6.3V_4
C243 1U/6.3V_4
C716 .1U/10V_4
C709 .1U/10V_4
C706 .47U/6.3V_4
AK16 AK17 AK21 AK24 AK27
PEX_IOVDD_1
PEX_IOVDD_2
PEX_IOVDD_3
PEX_IOVDD_4
PEX_IOVDD_5
+VGA1.1V
1600mA
C707 22U/6.3V_8
C205 4.7U/6.3V_6
C254 1U/6.3V_4
C204 .47U/6.3V_4
C723 .47U/6.3V_4
C718 .1U/10V_4
AG11 AG12 AG13 AG15 AG16 AG17 AG18 AG22 AG23 AG24 AG25 AG26 AJ14 AJ15 AJ19 AJ21 AJ22 AJ24 AJ25 AJ27 AK18 AK20 AK23 AK26 AL16
PEX_IOVDDQ_1 … PEX_IOVDDQ_25
Near BGA
+3V
C292 1U/6.3V_4
C310 .1U/10V_4
C339 .1U/10V_4
J10 J11 J12 J13 J9
VDD33_1 VDD33_2 VDD33_3 VDD33_4 VDD33_5
[43] VGA_SENSE
SI-2 4/10 For Nvidia recommend.
AD20 VDD_SENSE
AD19 GND_SENSE
+VGA1.1V
L22 10nH_6
+PEX_PLLVDD
100mA
12~16 mils width
C236 4.7U/6.3V_6
C720 4.7U/6.3V_6
C726 1U/6.3V_4
C251 .1U/10V_4
C724 .01U/16V_4
AG14 PEX_PLLVDD
AG19 PEX_CAL_PD_VDDQ
AG20 PEX_CAL_PU_GND
A2 AB7 AD6 AF6 AG6 AJ5 AK15 AL7 D35 E35 E7 F7 H32 M7 P6 P7 R7 U7 V6
NC_1 … NC_19
PEX_RX0 … PEX_RX15*
AP17 AN17 AN19 AP19 AR19 AR20 AP20 AN20 AN22 AP22 AR22 AR23 AP23 AN23 AN25 AP25 AR25 AR26 AP26 AN26 AN28 AP28 AR28 AR29 AP29 AN29 AN31 AP31 AR31 AR32 AR34 AP34
PEG_TX0_VGA PEG_TX#0_VGA PEG_TX1_VGA PEG_TX#1_VGA PEG_TX2_VGA PEG_TX#2_VGA PEG_TX3_VGA PEG_TX#3_VGA
PEG_TX0_VGA [6]
PEG_TX#0_VGA [6]
PEG_TX1_VGA [6]
PEG_TX#1_VGA [6]
PEG_TX2_VGA [6]
PEG_TX#2_VGA [6]
PEG_TX3_VGA [6]
PEG_TX#3_VGA [6]
05/22 (PV) FOR UMA HDMI.
PEG_TX4 [6] … PEG_TX#15 [6]
PEX_TX0 … PEX_TX15*
AL17 AM17 AM18 AM19 AL19 AK19 AL20 AM20 AM21 AM22 AL22 AK22 AL23 AM23 AM24 AM25 AL25 AK25 AL26 AM26 AM27 AM28 AL28 AK28 AK29 AL29 AM29 AM30 AM31 AM32 AN32 AP32
C_PEG_RX0 … C_PEG_RX#15
C171 C170 C209 C210 C172 C173 C145 C146 C211 C212 C213 C214 C147 C148 C174 C175 C149 C150 C176 C177 C151 C152 C199 C200 C178 C179 C162 C163 C155 C156 C180 C181
.1U/10V_4
PEG_RX0 [6] … PEG_RX#15 [6]
AR16 AR17 PEX_REFCLK PEX_REFCLK*
CLK_PCIE_VGA [2]
CLK_PCIE_VGA# [2]
AJ17 AJ18 PEX_TSTCLK_OUT PEX_TSTCLK_OUT*
R161 *200_4
AM16 PEX_RST* VGA_RST# R491 100/F_4
PLT_RST-R#-1
D28 *RB501V-40
PLT_RST-R#
PLT_RST-R# [6,22,26,32,34,35,37]
R490 *100K/F_4
AR13 PEX_CLKREQ* PEX_CLKREQ# T5
AG21 PEX_TERMP R165 2.49K/F_4
AP35 TESTMODE R486 10K/F_4
R487 *0_4/S
short0402-tt3
07/14 (PV2) Change footprint for PE require.
5 4 3 2 1
D C B A

PROJECT : UT7
Quanta Computer Inc.

NB5

Size	Document Number	Rev
Custom	**NV9X (PCIE I/F) 1/5**	E3A

Date: Friday, July 18, 2008 | Sheet 12 of 46

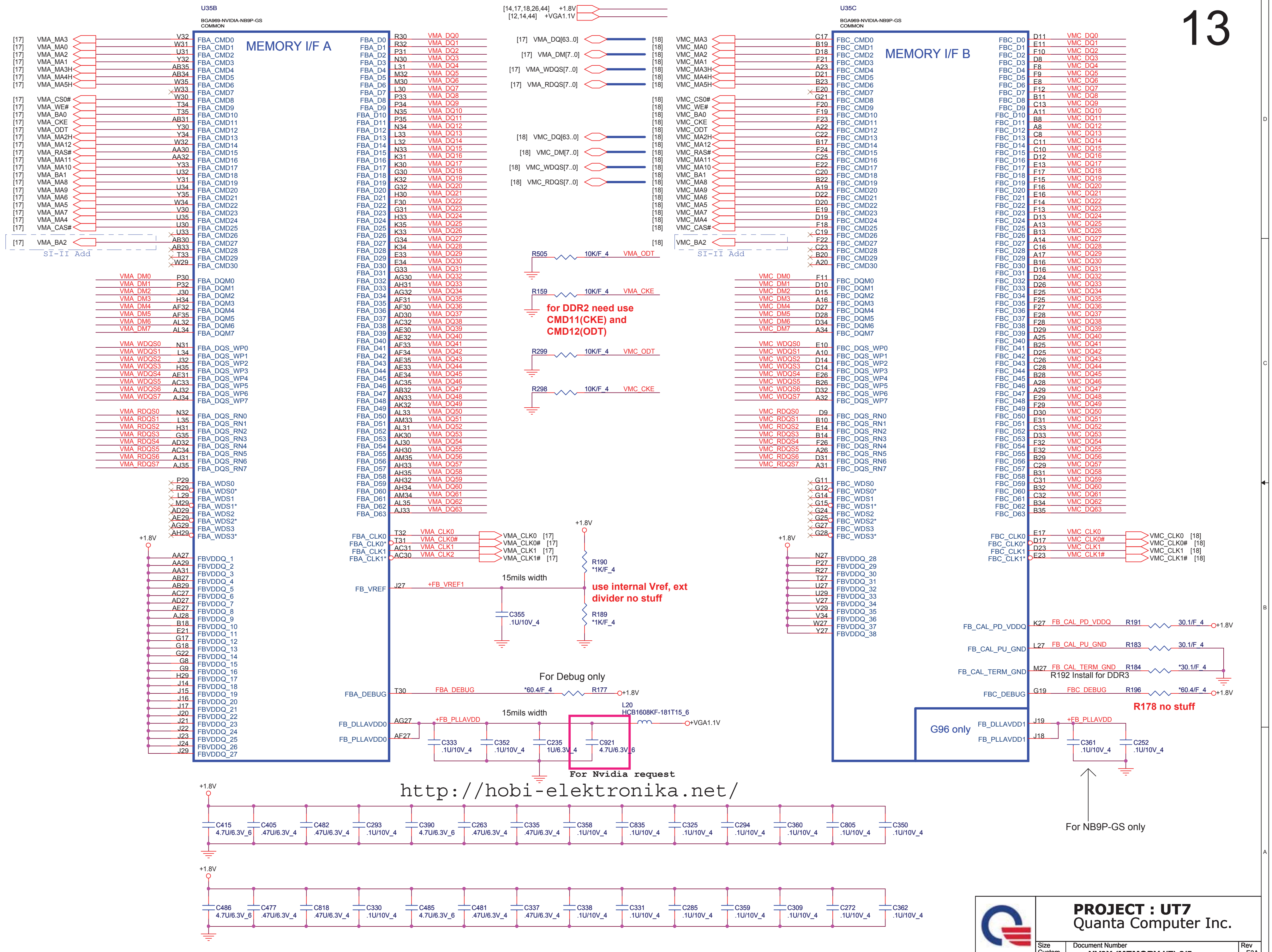
U35B
BGA969-NVIDIA-NB9P-GS
COMMON
MEMORY I/F A
U35C
BGA969-NVIDIA-NB9P-GS
COMMON
MEMORY I/F B
[14,17,18,26,44] +1.8V
[12,14,44] +VGA1.1V
[17] VMA_DQ[63..0]
[17] VMA_DM[7..0]
[17] VMA_WDQS[7..0]
[17] VMA_RDQS[7..0]
[18] VMC_DQ[63..0]
[18] VMC_DM[7..0]
[18] VMC_WDQS[7..0]
[18] VMC_RDQS[7..0]
FBA_CMD0 … FBA_CMD30
FBA_D0 … FBA_D63
FBA_DQM0 … FBA_DQM7
FBA_DQS_WP0 … FBA_DQS_WP7
FBA_DQS_RN0 … FBA_DQS_RN7
FBA_WDS0, FBA_WDS0*, FBA_WDS1, FBA_WDS1*, FBA_WDS2, FBA_WDS2*, FBA_WDS3, FBA_WDS3*
FBVDDQ_1 … FBVDDQ_27
FBC_CMD0 … FBC_CMD30
FBC_D0 … FBC_D63
FBC_DQM0 … FBC_DQM7
FBC_DQS_WP0 … FBC_DQS_WP7
FBC_DQS_RN0 … FBC_DQS_RN7
FBVDDQ_28 … FBVDDQ_38
VMA_MA3, VMA_MA0, VMA_MA2, VMA_MA1, VMA_MA3H, VMA_MA4H, VMA_MA5H
VMA_CS0#, VMA_WE#, VMA_BA0, VMA_CKE, VMA_ODT, VMA_MA2H, VMA_MA12, VMA_RAS#, VMA_MA11, VMA_MA10, VMA_BA1, VMA_MA8, VMA_MA9, VMA_MA6, VMA_MA5, VMA_MA7, VMA_MA4, VMA_CAS#
VMA_BA2
SI-II Add
VMC_MA3, VMC_MA0, VMC_MA2, VMC_MA1, VMC_MA3H, VMC_MA4H, VMC_MA5H
VMC_CS0#, VMC_WE#, VMC_BA0, VMC_CKE, VMC_ODT, VMC_MA2H, VMC_MA12, VMC_RAS#, VMC_MA11, VMC_MA10, VMC_BA1, VMC_MA8, VMC_MA9, VMC_MA6, VMC_MA5, VMC_MA7, VMC_MA4, VMC_CAS#
VMC_BA2
SI-II Add
R505 10K/F_4 VMA_ODT
R159 10K/F_4 VMA_CKE
for DDR2 need use CMD11(CKE) and CMD12(ODT)
R299 10K/F_4 VMC_ODT
R298 10K/F_4 VMC_CKE
FBA_CLK0, FBA_CLK0*, FBA_CLK1, FBA_CLK1*
VMA_CLK0 [17], VMA_CLK0# [17], VMA_CLK1 [17], VMA_CLK1# [17]
FBC_CLK0, FBC_CLK0*, FBC_CLK1, FBC_CLK1*
VMC_CLK0 [18], VMC_CLK0# [18], VMC_CLK1 [18], VMC_CLK1# [18]
+1.8V
R190 *1K/F_4
15mils width
FB_VREF J27 +FB_VREF1
use internal Vref, ext divider no stuff
C355 .1U/10V_4
R189 *1K/F_4
FB_CAL_PD_VDDQ K27 FB_CAL_PD_VDDQ R191 30.1/F_4 +1.8V
FB_CAL_PU_GND L27 FB_CAL_PU_GND R183 30.1/F_4
FB_CAL_TERM_GND M27 FB_CAL_TERM_GND R184 *30.1/F_4
R192 Install for DDR3
FBC_DEBUG G19 FBC_DEBUG R196 *60.4/F_4 +1.8V
R178 no stuff
For Debug only
FBA_DEBUG T30 FBA_DEBUG *60.4/F_4 R177 +1.8V
15mils width
L20 HCB1608KF-181T15_6 +VGA1.1V
FB_DLLAVDD0 AG27 +FB_PLLAVDD
FB_PLLAVDD0 AF27
C333 .1U/10V_4
C352 .1U/10V_4
C235 1U/6.3V_4
C921 4.7U/6.3V_6
For Nvidia request
G96 only
FB_DLLAVDD1 J19 +FB_PLLAVDD
FB_PLLAVDD1 J18
C361 .1U/10V_4
C252 .1U/10V_4
For NB9P-GS only
+1.8V
C415 4.7U/6.3V_6
C405 .47U/6.3V_4
C482 .47U/6.3V_4
C293 .1U/10V_4
C390 4.7U/6.3V_6
C263 .47U/6.3V_4
C335 .47U/6.3V_4
C358 .1U/10V_4
C835 .1U/10V_4
C325 .1U/10V_4
C294 .1U/10V_4
C360 .1U/10V_4
C805 .1U/10V_4
C350 .1U/10V_4
+1.8V
C486 4.7U/6.3V_6
C477 .47U/6.3V_4
C818 .47U/6.3V_4
C330 .1U/10V_4
C485 4.7U/6.3V_6
C481 .47U/6.3V_4
C337 .47U/6.3V_4
C338 .1U/10V_4
C331 .1U/10V_4
C285 .1U/10V_4
C359 .1U/10V_4
C309 .1U/10V_4
C272 .1U/10V_4
C362 .1U/10V_4
5 4 3 2 1
D C B A

http://hobi-elektronika.net/

NB5

PROJECT : UT7
Quanta Computer Inc.

Size	Document Number	Rev
Custom	NV9X (MEMORY I/F) 2/5	E3A
Date: Friday, July 18, 2008	Sheet 13 of 46	

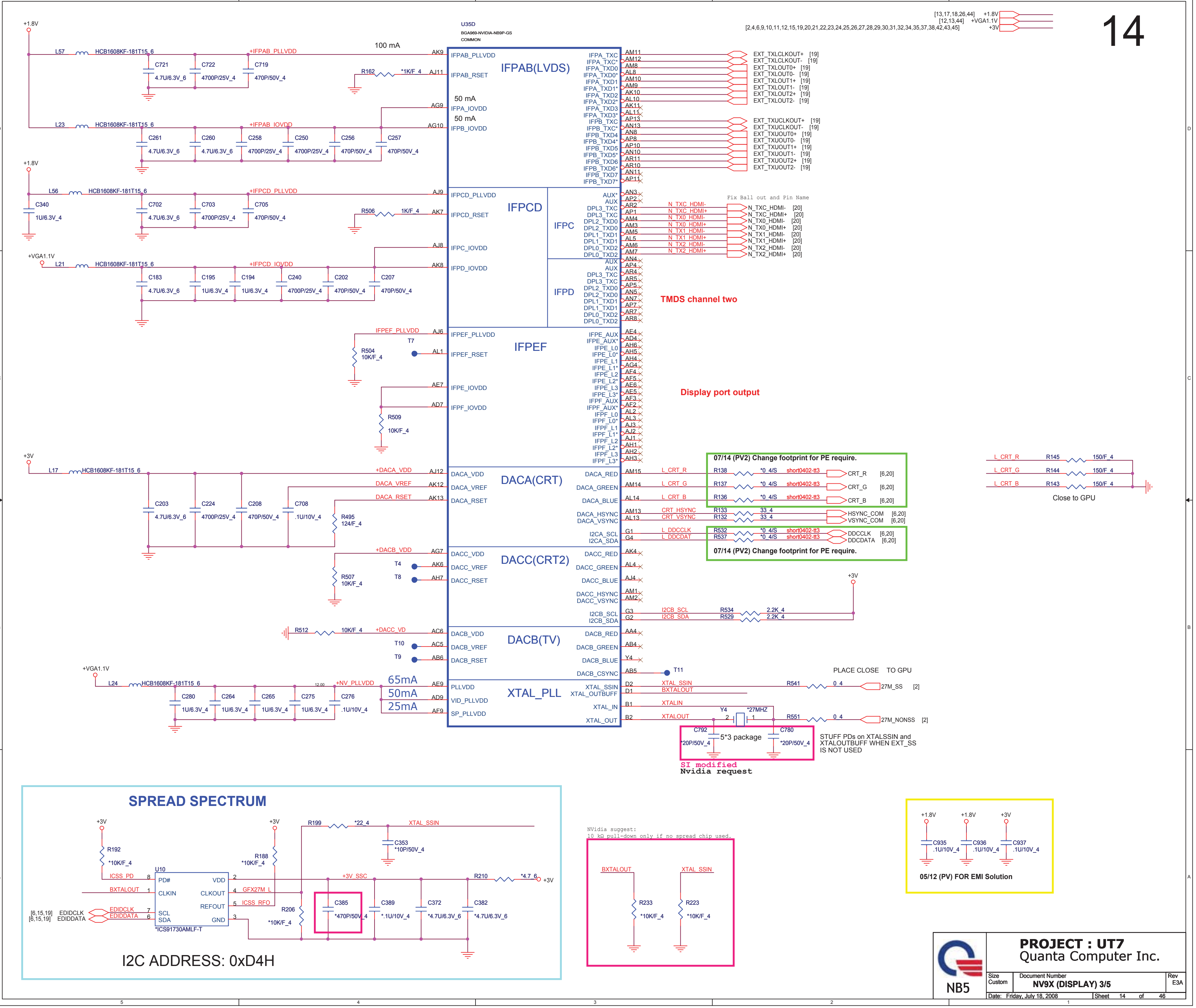
U35D
BGA969-NVIDIA-NB9P-GS
COMMON
IFPAB(LVDS)
IFPCD
IFPC
IFPD
IFPEF
DACA(CRT)
DACC(CRT2)
DACB(TV)
XTAL_PLL
100 mA
50 mA
50 mA
65mA
50mA
25mA
+1.8V
+3V
+VGA1.1V
L57 HCB1608KF-181T15_6
+IFPAB_PLLVDD
C721 4.7U/6.3V_6
C722 4700P/25V_4
C719 470P/50V_4
R162 *1K/F_4
L23 HCB1608KF-181T15_6
+IFPAB_IOVDD
C261 4.7U/6.3V_6
C260 4.7U/6.3V_6
C258 4700P/25V_4
C250 4700P/25V_4
C256 470P/50V_4
C257 470P/50V_4
L56 HCB1608KF-181T15_6
+IFPCD_PLLVDD
C340 1U/6.3V_4
C702 4.7U/6.3V_6
C703 4700P/25V_4
C705 470P/50V_4
R506 1K/F_4
L21 HCB1608KF-181T15_6
+IFPCD_IOVDD
C183 4.7U/6.3V_6
C195 1U/6.3V_4
C194 1U/6.3V_4
C240 4700P/25V_4
C202 470P/50V_4
C207 470P/50V_4
IFPEF_PLLVDD
R504 10K/F_4
T7
R509 10K/F_4
L17 HCB1608KF-181T15_6
+DACA_VDD
DACA_VREF
DACA_RSET
C203 4.7U/6.3V_6
C224 4700P/25V_4
C208 470P/50V_4
C708 .1U/10V_4
R495 124/F_4
+DACB_VDD
R507 10K/F_4
T4
T8
R512 10K/F_4
+DACC_VD
T10
T9
L24 HCB1608KF-181T15_6
+NV_PLLVDD
C280 1U/6.3V_4
C264 1U/6.3V_4
C265 1U/6.3V_4
C275 1U/6.3V_4
C276 .1U/10V_4
IFPAB_PLLVDD
IFPAB_RSET
IFPA_IOVDD
IFPB_IOVDD
IFPCD_PLLVDD
IFPCD_RSET
IFPC_IOVDD
IFPD_IOVDD
IFPEF_PLLVDD
IFPEF_RSET
IFPE_IOVDD
IFPF_IOVDD
DACA_VDD
DACA_VREF
DACA_RSET
DACC_VDD
DACC_VREF
DACC_RSET
DACB_VDD
DACB_VREF
DACB_RSET
PLLVDD
VID_PLLVDD
SP_PLLVDD
AK9 AJ11 AG9 AG10 AJ9 AK7 AJ8 AK8 AJ6 AL1 AE7 AD7 AJ12 AK12 AK13 AG7 AK6 AH7 AC6 AC5 AB6 AE9 AD9 AF9
IFPA_TXC IFPA_TXC* IFPA_TXD0 IFPA_TXD0* IFPA_TXD1 IFPA_TXD1* IFPA_TXD2 IFPA_TXD2* IFPA_TXD3 IFPA_TXD3*
IFPB_TXC IFPB_TXC* IFPB_TXD4 IFPB_TXD4* IFPB_TXD5 IFPB_TXD5* IFPB_TXD6 IFPB_TXD6* IFPB_TXD7 IFPB_TXD7*
AM11 AM12 AM8 AL8 AM10 AM9 AK10 AL10 AK11 AL11 AP13 AN13 AN8 AP8 AP10 AN10 AR11 AR10 AN11 AP11
EXT_TXLCLKOUT+ [19]
EXT_TXLCLKOUT- [19]
EXT_TXLOUT0+ [19]
EXT_TXLOUT0- [19]
EXT_TXLOUT1+ [19]
EXT_TXLOUT1- [19]
EXT_TXLOUT2+ [19]
EXT_TXLOUT2- [19]
EXT_TXUCLKOUT+ [19]
EXT_TXUCLKOUT- [19]
EXT_TXUOUT0+ [19]
EXT_TXUOUT0- [19]
EXT_TXUOUT1+ [19]
EXT_TXUOUT1- [19]
EXT_TXUOUT2+ [19]
EXT_TXUOUT2- [19]
AUX* AUX DPL3_TXC DPL3_TXC DPL2_TXD0 DPL2_TXD0 DPL1_TXD1 DPL1_TXD1 DPL0_TXD2 DPL0_TXD2
AN3 AP2 AR2 AP1 AM4 AM3 AM5 AL5 AM6 AM7 AN4 AP4 AR4 AP5 AR5 AN5 AN7 AP7 AR7 AR8
Fix Ball out and Pin Name
N_TXC_HDMI- N_TXC_HDMI+ N_TX0_HDMI- N_TX0_HDMI+ N_TX1_HDMI- N_TX1_HDMI+ N_TX2_HDMI- N_TX2_HDMI+
N_TXC_HDMI- [20]
N_TXC_HDMI+ [20]
N_TX0_HDMI- [20]
N_TX0_HDMI+ [20]
N_TX1_HDMI- [20]
N_TX1_HDMI+ [20]
N_TX2_HDMI- [20]
N_TX2_HDMI+ [20]
TMDS channel two
IFPE_AUX IFPE_AUX* IFPE_L0 IFPE_L0* IFPE_L1 IFPE_L1* IFPE_L2 IFPE_L2* IFPE_L3 IFPE_L3*
IFPF_AUX IFPF_AUX* IFPF_L0 IFPF_L0* IFPF_L1 IFPF_L1* IFPF_L2 IFPF_L2* IFPF_L3 IFPF_L3*
AE4 AD4 AH6 AH5 AH4 AG4 AF4 AF5 AE6 AE5 AF3 AF2 AL2 AL3 AJ3 AJ2 AJ1 AH1 AH2 AH3
Display port output
DACA_RED DACA_GREEN DACA_BLUE DACA_HSYNC DACA_VSYNC I2CA_SCL I2CA_SDA
AM15 AM14 AL14 AM13 AL13 G1 G4
L_CRT_R L_CRT_G L_CRT_B CRT_HSYNC CRT_VSYNC L_DDCCLK L_DDCDAT
07/14 (PV2) Change footprint for PE require.
R138 *0_4/S short0402-tt3 CRT_R [6,20]
R137 *0_4/S short0402-tt3 CRT_G [6,20]
R136 *0_4/S short0402-tt3 CRT_B [6,20]
R133 33_4 HSYNC_COM [6,20]
R132 33_4 VSYNC_COM [6,20]
R532 *0_4/S short0402-tt3 DDCCLK [6,20]
R537 *0_4/S short0402-tt3 DDCDATA [6,20]
07/14 (PV2) Change footprint for PE require.
L_CRT_R R145 150/F_4
L_CRT_G R144 150/F_4
L_CRT_B R143 150/F_4
Close to GPU
DACC_RED DACC_GREEN DACC_BLUE DACC_HSYNC DACC_VSYNC I2CB_SCL I2CB_SDA
AK4 AL4 AJ4 AM1 AM2 G3 G2
I2CB_SCL R534 2.2K_4
I2CB_SDA R529 2.2K_4
DACB_RED DACB_GREEN DACB_BLUE DACB_CSYNC
AA4 AB4 Y4 AB5
T11
PLACE CLOSE TO GPU
XTAL_SSIN XTAL_OUTBUFF XTAL_IN XTAL_OUT
D2 D1 B1 B2
XTAL_SSIN BXTALOUT XTALIN XTALOUT
R541 0_4 27M_SS [2]
Y4 *27MHZ
R551 0_4 27M_NONSS [2]
C792 *20P/50V_4
5*3 package
C780 *20P/50V_4
STUFF PDs on XTALSSIN and XTALOUTBUFF WHEN EXT_SS IS NOT USED
SI modified
Nvidia request
[13,17,18,26,44] +1.8V
[12,13,44] +VGA1.1V
[2,4,6,9,10,11,12,15,19,20,21,22,23,24,25,26,27,28,29,30,31,32,34,35,37,38,42,43,45] +3V
SPREAD SPECTRUM
R192 *10K/F_4
R188 *10K/F_4
R199 *22_4 XTAL_SSIN
C353 *10P/50V_4
U10
ICSS_PD 8 PD#
BXTALOUT 1 CLKIN
VDD 2
CLKOUT 4 GFX27M_L
REFOUT 5 ICSS_RFO
GND 3
[6,15,19] EDIDCLK EDIDCLK 7 SCL
[6,15,19] EDIDDATA EDIDDATA 6 SDA
*ICS91730AMLF-T
+3V_SSC
R210 *4.7_6 +3V
R206 *10K/F_4
C385 *470P/50V_4
C389 *.1U/10V_4
C372 *4.7U/6.3V_6
C382 *4.7U/6.3V_6
I2C ADDRESS: 0xD4H
NVidia suggest:
10 kΩ pull-down only if no spread chip used.
BXTALOUT R233 *10K/F_4
XTAL_SSIN R223 *10K/F_4
C935 .1U/10V_4
C936 .1U/10V_4
C937 .1U/10V_4
05/12 (PV) FOR EMI Solution

PROJECT : UT7
Quanta Computer Inc.

NB5

Size	Document Number	Rev
Custom	NV9X (DISPLAY) 3/5	E3A

Date: Friday, July 18, 2008 Sheet 14 of 46

[2,4,6,9,10,11,12,14,19,20,21,22,23,24,25,26,27,28,29,30,31,32,34,35,37,38,42,43,45] +3V

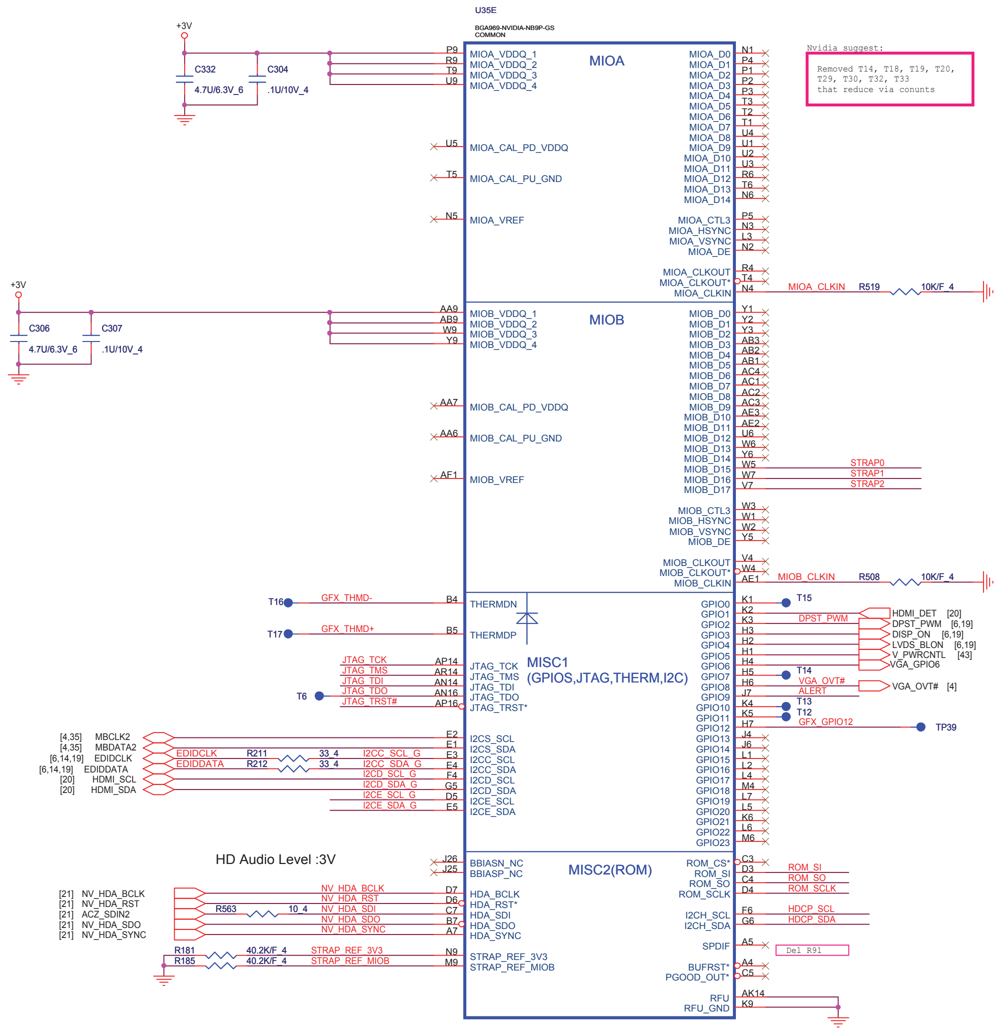
U35E
BGA969-NVIDIA-NB9P-GS
COMMON
+3V
C332
4.7U/6.3V_6
C304
.1U/10V_4
MIOA
MIOA_VDDQ_1
MIOA_VDDQ_2
MIOA_VDDQ_3
MIOA_VDDQ_4
MIOA_CAL_PD_VDDQ
MIOA_CAL_PU_GND
MIOA_VREF
MIOA_D0 … MIOA_D14
MIOA_CTL3
MIOA_HSYNC
MIOA_VSYNC
MIOA_DE
MIOA_CLKOUT
MIOA_CLKOUT*
MIOA_CLKIN
MIOA_CLKIN R519 10K/F_4
C306
4.7U/6.3V_6
C307
.1U/10V_4
MIOB
MIOB_VDDQ_1
MIOB_VDDQ_2
MIOB_VDDQ_3
MIOB_VDDQ_4
MIOB_CAL_PD_VDDQ
MIOB_CAL_PU_GND
MIOB_VREF
MIOB_D0 … MIOB_D17
STRAP0
STRAP1
STRAP2
MIOB_CTL3
MIOB_HSYNC
MIOB_VSYNC
MIOB_DE
MIOB_CLKOUT
MIOB_CLKOUT*
MIOB_CLKIN
MIOB_CLKIN R508 10K/F_4
T16
GFX_THMD-
T17
GFX_THMD+
THERMDN
THERMDP
MISC1
(GPIOS,JTAG,THERM,I2C)
JTAG_TCK
JTAG_TMS
JTAG_TDI
JTAG_TDO
JTAG_TRST#
T6
GPIO0 … GPIO23
T15
DPST_PWM
HDMI_DET [20]
DPST_PWM [6,19]
DISP_ON [6,19]
LVDS_BLON [6,19]
V_PWRCNTL [43]
VGA_GPIO6
T14
VGA_OVT#
ALERT
VGA_OVT# [4]
T13
T12
GFX_GPIO12
TP39
[4,35] MBCLK2
[4,35] MBDATA2
[6,14,19] EDIDCLK
[6,14,19] EDIDDATA
[20] HDMI_SCL
[20] HDMI_SDA
EDIDCLK R211 33_4
EDIDDATA R212 33_4
I2CC_SCL_G
I2CC_SDA_G
I2CD_SCL_G
I2CD_SDA_G
I2CE_SCL_G
I2CE_SDA_G
I2CS_SCL
I2CS_SDA
I2CC_SCL
I2CC_SDA
I2CD_SCL
I2CD_SDA
I2CE_SCL
I2CE_SDA
HD Audio Level :3V
MISC2(ROM)
BBIASN_NC
BBIASP_NC
[21] NV_HDA_BCLK
[21] NV_HDA_RST
[21] ACZ_SDIN2
[21] NV_HDA_SDO
[21] NV_HDA_SYNC
R563 10_4
HDA_BCLK
HDA_RST*
HDA_SDI
HDA_SDO
HDA_SYNC
R181 40.2K/F_4 STRAP_REF_3V3
R185 40.2K/F_4 STRAP_REF_MIOB
STRAP_REF_3V3
STRAP_REF_MIOB
ROM_CS*
ROM_SI
ROM_SO
ROM_SCLK
I2CH_SCL
I2CH_SDA
HDCP_SCL
HDCP_SDA
SPDIF
Del R91
BUFRST*
PGOOD_OUT*
RFU
RFU_GND

Nvidia suggest:

Removed T14, T18, T19, T20, T29, T30, T32, T33 that reduce via conunts

NB9P-GS (G96) Straps
NB9M-GE (G98) Straps
GPIO ASSIGNMENTS

GPIO	I/O	ACTIVE	USAGE
0	IN	N/A	PRIMARY DVI HOTPLUG
1	IN	N/A	SECONDARY DVI HOTPLUG
2	OUT	HIGH	PANEL BACKLIGHT PWM
3	OUT	HIGH	PANEL POWER ENABLE
4	OUT	HIGH	PANEL BACKLIGHT ENABLE
5	OUT	N/A	NVVDD VID0
6	OUT	N/A	NVVDD VID1
7	OUT	N/A	FBVDD VID0
8	IN	LOW	THERMAL ALERT
9	OUT	LOW	FAN PWM
10	OUT	N/A	FBVREF SELECT
11	OUT	N/A	SLI SYNC0
12	IN	N/A	AC DETECT
13	OUT	LOW	PS CONTROL OR HDMI_CEC
14	OUT	HIGH	PS CONTROL

PCI_DEVID[4]/SUBVENDOR

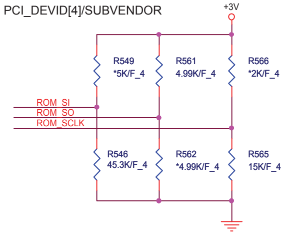
+3V
R549
*5K/F_4
R561
4.99K/F_4
R566
*2K/F_4
ROM_SI
ROM_SO
ROM_SCLK
R546
45.3K/F_4
R562
*4.99K/F_4
R565
15K/F_4

SEE Datasheet for details on G9x Straps!

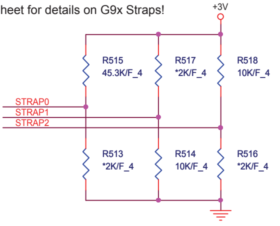
+3V
R515
45.3K/F_4
R517
*2K/F_4
R518
10K/F_4
STRAP0
STRAP1
STRAP2
R513
*2K/F_4
R514
10K/F_4
R516
*2K/F_4

Logical Strap Bit Mapping

	PU-VDD	PD
5K	1000	0000
10K	1001	0001
15K	1010	0010
20K	1011	0011
25K	1100	0100
30K	1101	0101
35K	1110	0110
45K	1111	0111

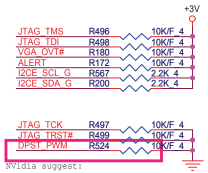
+3V
JTAG_TMS R496 10K/F_4
JTAG_TDI R498 10K/F_4
VGA_OVT# R180 10K/F_4
ALERT R172 10K/F_4
I2CE_SCL_G R567 2.2K_4
I2CE_SDA_G R200 2.2K_4
JTAG_TCK R497 10K/F_4
JTAG_TRST# R499 10K/F_4
DPST_PWM R524 10K/F_4

NVidia suggest:
Pull low 10KR for R95, R7 & R525

	Logical Strapping Bit3	Logical Strapping Bit2	Logical Strapping Bit1	Logical Strapping Bit0	
ROM_SO	XCLK_277	TVMODE2]	TVMODE[1]	TVMODE[0]	**1000**
ROM_SCLK	PCI_DEVIDE[4]	SUB_VENDOR	SLOT_CLK_CFG	PEX_PLL_EN_TERM100	**0010**
ROM_SI	RAMCFG[3]	RAMCFG[2]	RAMCFG[1]	RAMCFG[0]	**XXXX**
STRAP2	PCI_DEVID[3]	PCI_DEVID[2]	PCI_DEVID[1]	PCI_DEVID[0]	**XXXX**
STRAP1	3GIO_PADCFG[3]	3GIO_PADCFG[2]	3GIO_PADCFG[1]	3GIO_PADCFG[0]	**0001**
STRAP0	USER[3]	USER[2]	USER[1]	USER[0]	**1111**

Delete VGA thermal circuit

PCI_DEVID: STRAP2

NB9M-GE	**0x06E 8**	**1000**	**default**
NB9M-GS	0x06E 9	1001	
NB9P-GE2	0x064 8	1000	
NB9P-GS	**0x064 9**	**1001**	**default**

NB9X VRAM Configuration Table

RAM_CFG[3:0]	DESCRIPTION	Vendor
0111	DDR2 32Mx16x8, 128bit, 512MB	Hynix HY5PS121621CFP-25
0110	DDR2 32Mx16x8, 128bit, 512MB	Qimonda HYB18T512161B2F-25
0101	DDR2 32Mx16x8, 128bit, 512MB	Samsung K4N51163QE-ZC25
0100	DDR2 32Mx16x8, 128bit, 512MB	Nanya/Elpida
0000	DDR2 64Mx16x8, 128bit, 1GB	Hynix
0001	DDR2 64Mx16x8, 128bit, 1GB	Samsung
0010	DDR2 64Mx16x8, 128bit, 1GB	Qimonda

CS33572FB13 RES CHIP 35.7K 1/16W +-1%(0402)

HDCP ROM

DHCP ROM	
HDCP_SCL	Low: Crypto ROM **Hi: I2C ROM**

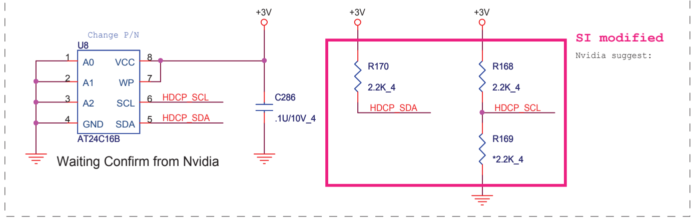
Change P/N
U8
A0
A1
A2
GND
VCC
WP
SCL
SDA
AT24C16B
HDCP_SCL
HDCP_SDA
+3V
C286
.1U/10V_4
R170
2.2K_4
HDCP_SDA
R168
2.2K_4
HDCP_SCL
R169
*2.2K_4
SI modified
Nvidia suggest:

Waiting Confirm from Nvidia

PROJECT : UT7
Quanta Computer Inc.
NB5
Size: C
Document Number: NV9X (GPIO & STRRAPS) 4/5
Rev: E3A
Date: Friday, July 18, 2008
Sheet 15 of 46

NVVDD Decoupling

[43] +VGACORE

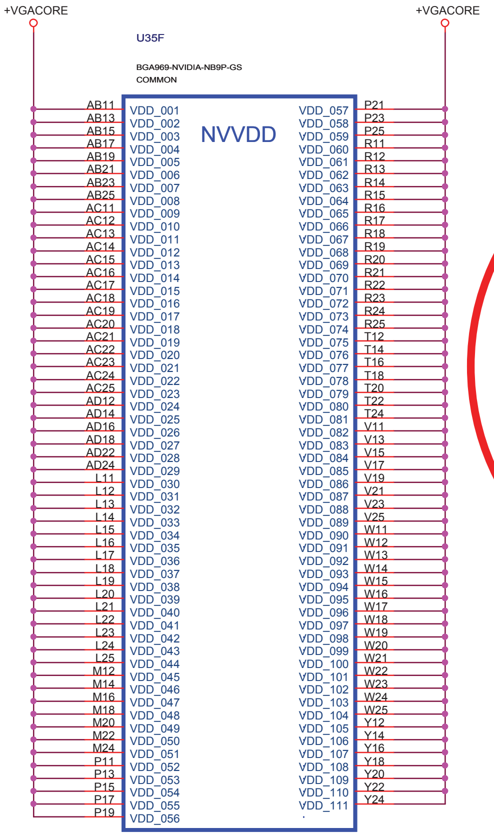
+VGACORE
+VGACORE
U35F
BGA969-NVIDIA-NB9P-GS
COMMON
NVVDD
AB11 VDD_001
AB13 VDD_002
AB15 VDD_003
AB17 VDD_004
AB19 VDD_005
AB21 VDD_006
AB23 VDD_007
AB25 VDD_008
AC11 VDD_009
AC12 VDD_010
AC13 VDD_011
AC14 VDD_012
AC15 VDD_013
AC16 VDD_014
AC17 VDD_015
AC18 VDD_016
AC19 VDD_017
AC20 VDD_018
AC21 VDD_019
AC22 VDD_020
AC23 VDD_021
AC24 VDD_022
AC25 VDD_023
AD12 VDD_024
AD14 VDD_025
AD16 VDD_026
AD18 VDD_027
AD22 VDD_028
AD24 VDD_029
L11 VDD_030
L12 VDD_031
L13 VDD_032
L14 VDD_033
L15 VDD_034
L16 VDD_035
L17 VDD_036
L18 VDD_037
L19 VDD_038
L20 VDD_039
L21 VDD_040
L22 VDD_041
L23 VDD_042
L24 VDD_043
L25 VDD_044
M12 VDD_045
M14 VDD_046
M16 VDD_047
M18 VDD_048
M20 VDD_049
M22 VDD_050
M24 VDD_051
P11 VDD_052
P13 VDD_053
P15 VDD_054
P17 VDD_055
P19 VDD_056
VDD_057 P21
VDD_058 P23
VDD_059 P25
VDD_060 R11
VDD_061 R12
VDD_062 R13
VDD_063 R14
VDD_064 R15
VDD_065 R16
VDD_066 R17
VDD_067 R18
VDD_068 R19
VDD_069 R20
VDD_070 R21
VDD_071 R22
VDD_072 R23
VDD_073 R25
VDD_074 T12
VDD_075 T14
VDD_076 T16
VDD_077 T18
VDD_078 T20
VDD_079 T22
VDD_080 T24
VDD_081 V11
VDD_082 V13
VDD_083 V15
VDD_084 V17
VDD_085 V19
VDD_086 V21
VDD_087 V23
VDD_088 V25
VDD_089 W11
VDD_090 W12
VDD_091 W13
VDD_092 W14
VDD_093 W15
VDD_094 W16
VDD_095 W17
VDD_096 W18
VDD_097 W19
VDD_098 W20
VDD_099 W21
VDD_100 W22
VDD_101 W23
VDD_102 W24
VDD_103 W25
VDD_104 Y12
VDD_105 Y14
VDD_106 Y16
VDD_107 Y18
VDD_108 Y20
VDD_109 Y22
VDD_110 Y24
VDD_111

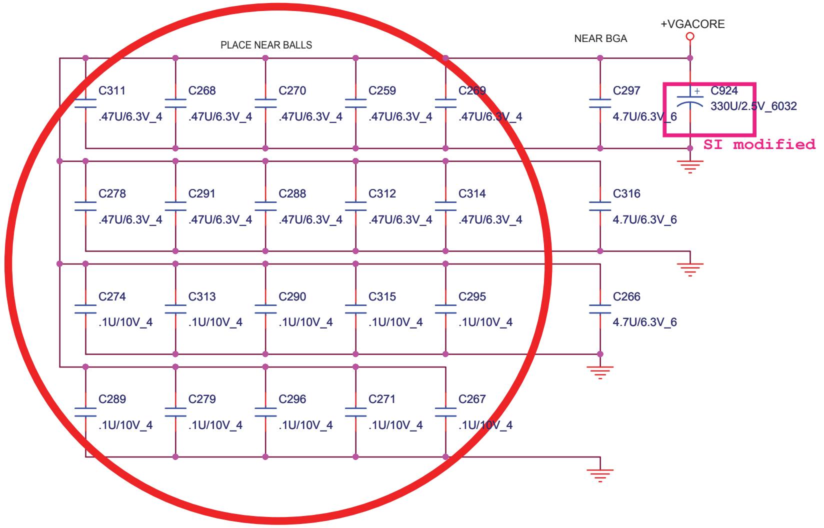
PLACE NEAR BALLS
NEAR BGA
+VGACORE
C311 .47U/6.3V_4
C268 .47U/6.3V_4
C270 .47U/6.3V_4
C259 .47U/6.3V_4
C269 .47U/6.3V_4
C297 4.7U/6.3V_6
C924 330U/2.5V_6032
SI modified
C278 .47U/6.3V_4
C291 .47U/6.3V_4
C288 .47U/6.3V_4
C312 .47U/6.3V_4
C314 .47U/6.3V_4
C316 4.7U/6.3V_6
C274 .1U/10V_4
C313 .1U/10V_4
C290 .1U/10V_4
C315 .1U/10V_4
C295 .1U/10V_4
C266 4.7U/6.3V_6
C289 .1U/10V_4
C279 .1U/10V_4
C296 .1U/10V_4
C271 .1U/10V_4
C267 .1U/10V_4

Follow Design Guide DG-03276-001 4.7uFx3
and 0.47x10 uF instead of 0.1uF x10

NB9M: VGACORE +0.90V (Normal) , +1.09V

power up sequence

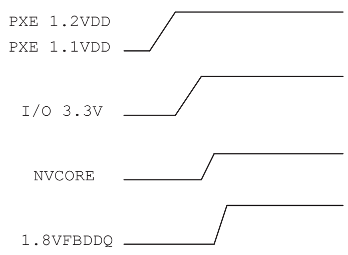
PXE 1.2VDD
PXE 1.1VDD
I/O 3.3V
NVCORE
1.8VFBDDQ

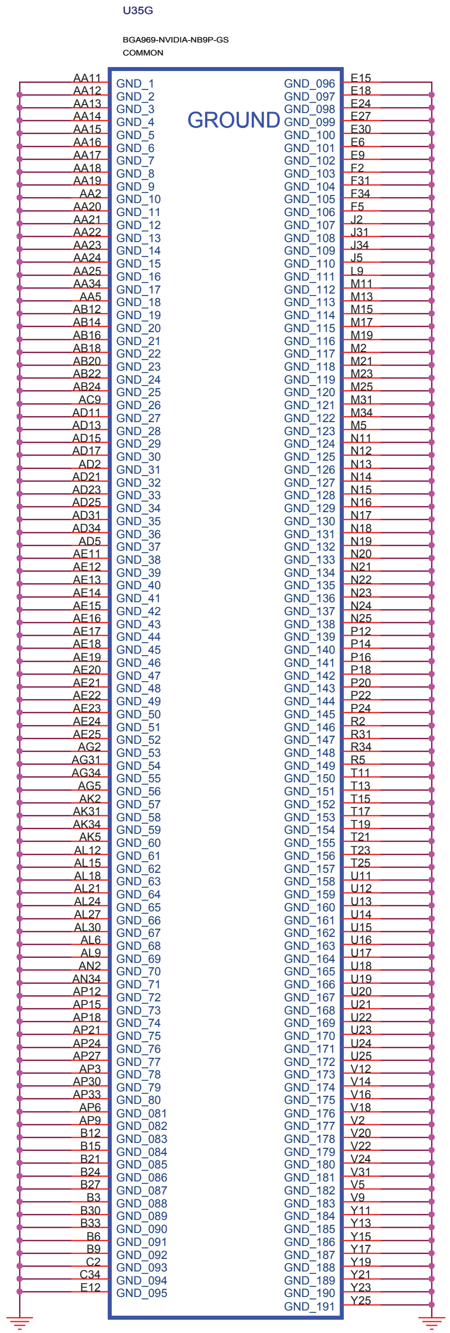
U35G
BGA969-NVIDIA-NB9P-GS
COMMON
GROUND
AA11 GND_1
AA12 GND_2
AA13 GND_3
AA14 GND_4
AA15 GND_5
AA16 GND_6
AA17 GND_7
AA18 GND_8
AA19 GND_9
AA2 GND_10
AA20 GND_11
AA21 GND_12
AA22 GND_13
AA23 GND_14
AA24 GND_15
AA25 GND_16
AA34 GND_17
AA5 GND_18
AB12 GND_19
AB14 GND_20
AB16 GND_21
AB18 GND_22
AB20 GND_23
AB22 GND_24
AB24 GND_25
AC9 GND_26
AD11 GND_27
AD13 GND_28
AD15 GND_29
AD17 GND_30
AD2 GND_31
AD21 GND_32
AD23 GND_33
AD25 GND_34
AD31 GND_35
AD34 GND_36
AD5 GND_37
AE11 GND_38
AE12 GND_39
AE13 GND_40
AE14 GND_41
AE15 GND_42
AE16 GND_43
AE17 GND_44
AE18 GND_45
AE19 GND_46
AE20 GND_47
AE21 GND_48
AE22 GND_49
AE23 GND_50
AE24 GND_51
AE25 GND_52
AG2 GND_53
AG31 GND_54
AG34 GND_55
AG5 GND_56
AK2 GND_57
AK31 GND_58
AK34 GND_59
AK5 GND_60
AL12 GND_61
AL15 GND_62
AL18 GND_63
AL21 GND_64
AL24 GND_65
AL27 GND_66
AL30 GND_67
AL6 GND_68
AL9 GND_69
AN2 GND_70
AN34 GND_71
AP12 GND_72
AP15 GND_73
AP18 GND_74
AP21 GND_75
AP24 GND_76
AP27 GND_77
AP3 GND_78
AP30 GND_79
AP33 GND_80
AP6 GND_081
AP9 GND_082
B12 GND_083
B15 GND_084
B21 GND_085
B24 GND_086
B27 GND_087
B3 GND_088
B30 GND_089
B33 GND_090
B6 GND_091
B9 GND_092
C2 GND_093
C34 GND_094
E12 GND_095
GND_096 E15
GND_097 E18
GND_098 E24
GND_099 E27
GND_100 E30
GND_101 E6
GND_102 E9
GND_103 F2
GND_104 F31
GND_105 F34
GND_106 F5
GND_107 J2
GND_108 J31
GND_109 J34
GND_110 J5
GND_111 L9
GND_112 M11
GND_113 M13
GND_114 M15
GND_115 M17
GND_116 M19
GND_117 M2
GND_118 M21
GND_119 M23
GND_120 M25
GND_121 M31
GND_122 M34
GND_123 M5
GND_124 N11
GND_125 N12
GND_126 N13
GND_127 N14
GND_128 N15
GND_129 N16
GND_130 N17
GND_131 N18
GND_132 N19
GND_133 N20
GND_134 N21
GND_135 N22
GND_136 N23
GND_137 N24
GND_138 N25
GND_139 P12
GND_140 P14
GND_141 P16
GND_142 P18
GND_143 P20
GND_144 P22
GND_145 P24
GND_146 R2
GND_147 R31
GND_148 R34
GND_149 R5
GND_150 T11
GND_151 T13
GND_152 T15
GND_153 T17
GND_154 T19
GND_155 T21
GND_156 T23
GND_157 T25
GND_158 U11
GND_159 U12
GND_160 U13
GND_161 U14
GND_162 U15
GND_163 U16
GND_164 U17
GND_165 U18
GND_166 U19
GND_167 U20
GND_168 U21
GND_169 U22
GND_170 U23
GND_171 U24
GND_172 U25
GND_173 V12
GND_174 V14
GND_175 V16
GND_176 V18
GND_177 V2
GND_178 V20
GND_179 V22
GND_180 V24
GND_181 V31
GND_182 V5
GND_183 V9
GND_184 Y11
GND_185 Y13
GND_186 Y15
GND_187 Y17
GND_188 Y19
GND_189 Y21
GND_190 Y23
GND_191 Y25

NB5

PROJECT : UT7
Quanta Computer Inc.

Size	Document Number	Rev
Custom	NV9X (POWER & GND) 5/5	E3A

Date: Friday, July 18, 2008 | Sheet 16 of 46

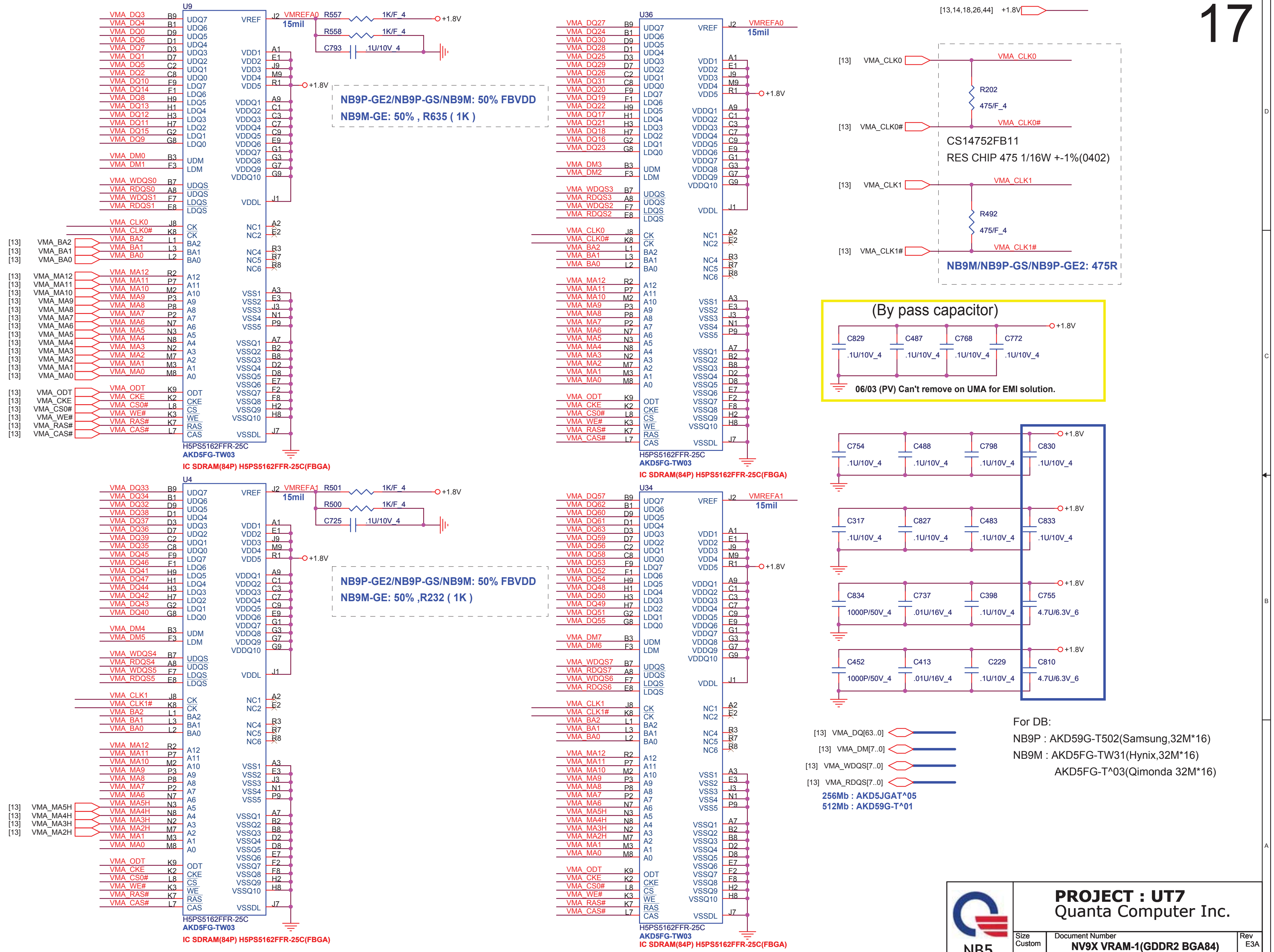
U9
U36
U4
U34
H5PS5162FFR-25C
AKD5FG-TW03
IC SDRAM(84P) H5PS5162FFR-25C(FBGA)
VMA_DQ[63..0]
VMA_DM[7..0]
VMA_WDQS[7..0]
VMA_RDQS[7..0]
VMREFA0
VMREFA1
15mil
R557 1K/F_4
R558 1K/F_4
C793 .1U/10V_4
R501 1K/F_4
R500 1K/F_4
C725 .1U/10V_4
+1.8V
[13,14,18,26,44]
VMA_CLK0
VMA_CLK0#
VMA_CLK1
VMA_CLK1#
R202 475/F_4
R492 475/F_4
C829 .1U/10V_4
C487 .1U/10V_4
C768 .1U/10V_4
C772 .1U/10V_4
C754 .1U/10V_4
C488 .1U/10V_4
C798 .1U/10V_4
C830 .1U/10V_4
C317 .1U/10V_4
C827 .1U/10V_4
C483 .1U/10V_4
C833 .1U/10V_4
C834 1000P/50V_4
C737 .01U/16V_4
C398 .1U/10V_4
C755 4.7U/6.3V_6
C452 1000P/50V_4
C413 .01U/16V_4
C229 .1U/10V_4
C810 4.7U/6.3V_6

NB9P-GE2/NB9P-GS/NB9M: 50% FBVDD

NB9M-GE: 50% , R635 (1K)

NB9P-GE2/NB9P-GS/NB9M: 50% FBVDD

NB9M-GE: 50% ,R232 (1K)

CS14752FB11

RES CHIP 475 1/16W +-1%(0402)

NB9M/NB9P-GS/NB9P-GE2: 475R

(By pass capacitor)

06/03 (PV) Can't remove on UMA for EMI solution.

256Mb : AKD5JGAT^05

512Mb : AKD59G-T^01

For DB:

NB9P : AKD59G-T502(Samsung,32M*16)

NB9M : AKD5FG-TW31(Hynix,32M*16)

AKD5FG-T^03(Qimonda 32M*16)

NB5

PROJECT : UT7

Quanta Computer Inc.

Size	Document Number	Rev
Custom	NV9X VRAM-1(GDDR2 BGA84)	E3A

Date: Friday, July 18, 2008 | Sheet 17 of 46

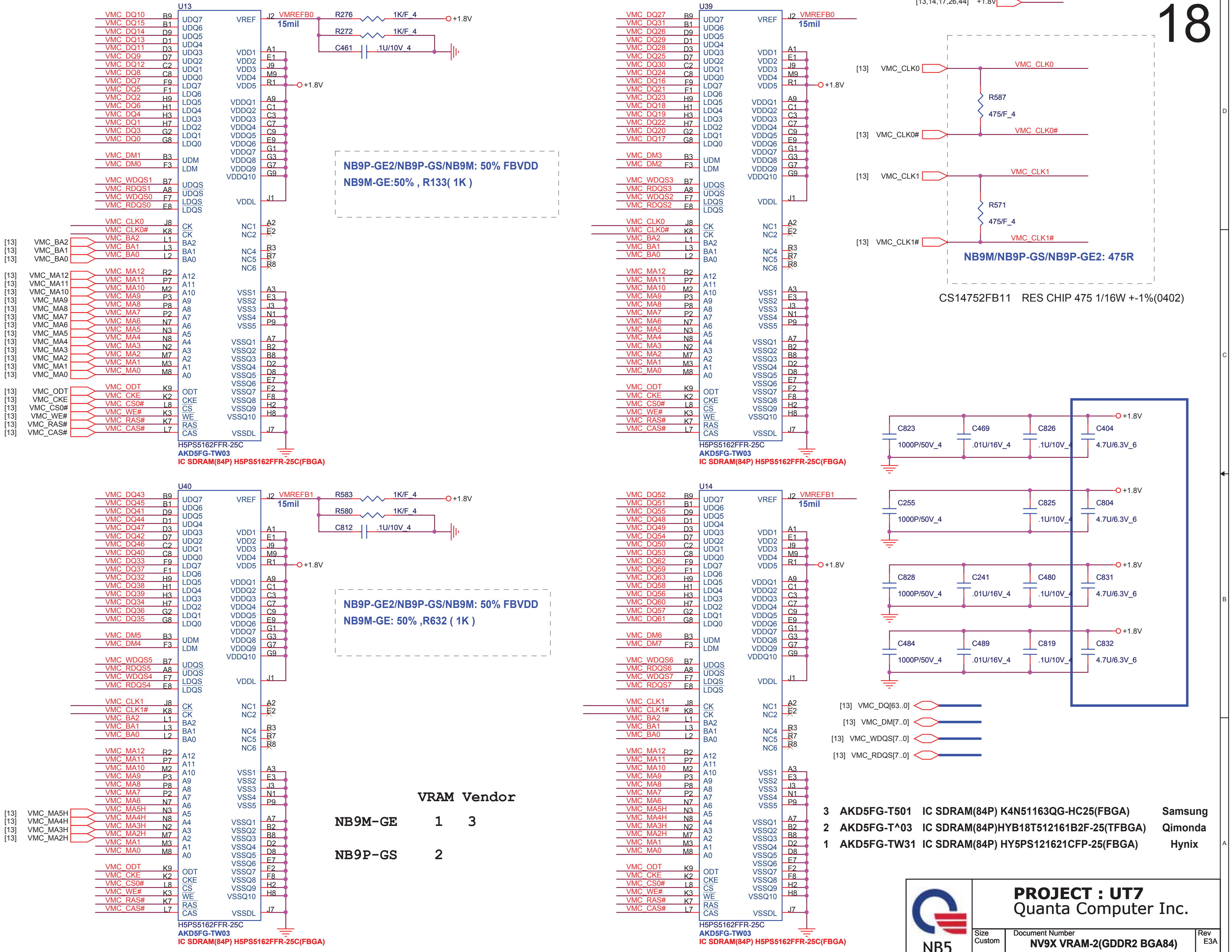
U13
U39
U40
U14
VREF
VMREFB0
VMREFB1
15mil
R276 1K/F_4
R272 1K/F_4
C461 .1U/10V_4
R583 1K/F_4
R580 1K/F_4
C812 .1U/10V_4
+1.8V
UDQ7
UDQ6
UDQ5
UDQ4
UDQ3
UDQ2
UDQ1
UDQ0
LDQ7
LDQ6
LDQ5
LDQ4
LDQ3
LDQ2
LDQ1
LDQ0
UDM
LDM
UDQS
LDQS
CK
BA2
BA1
BA0
A12
A11
A10
A9
A8
A7
A6
A5
A4
A3
A2
A1
A0
ODT
CKE
CS
WE
RAS
CAS
VDD1
VDD2
VDD3
VDD4
VDD5
VDDQ1
VDDQ2
VDDQ3
VDDQ4
VDDQ5
VDDQ6
VDDQ7
VDDQ8
VDDQ9
VDDQ10
VDDL
NC1
NC2
NC4
NC5
NC6
VSS1
VSS2
VSS3
VSS4
VSS5
VSSQ1
VSSQ2
VSSQ3
VSSQ4
VSSQ5
VSSQ6
VSSQ7
VSSQ8
VSSQ9
VSSQ10
VSSDL
VMC_DQ10
VMC_DQ15
VMC_DQ14
VMC_DQ13
VMC_DQ11
VMC_DQ9
VMC_DQ12
VMC_DQ8
VMC_DQ7
VMC_DQ5
VMC_DQ2
VMC_DQ6
VMC_DQ4
VMC_DQ1
VMC_DQ3
VMC_DQ0
VMC_DM1
VMC_DM0
VMC_WDQS1
VMC_RDQS1
VMC_WDQS0
VMC_RDQS0
VMC_DQ27
VMC_DQ31
VMC_DQ26
VMC_DQ29
VMC_DQ28
VMC_DQ25
VMC_DQ30
VMC_DQ24
VMC_DQ16
VMC_DQ21
VMC_DQ23
VMC_DQ18
VMC_DQ19
VMC_DQ22
VMC_DQ20
VMC_DQ17
VMC_DM3
VMC_DM2
VMC_WDQS3
VMC_RDQS3
VMC_WDQS2
VMC_RDQS2
VMC_DQ43
VMC_DQ45
VMC_DQ41
VMC_DQ44
VMC_DQ47
VMC_DQ42
VMC_DQ46
VMC_DQ40
VMC_DQ33
VMC_DQ37
VMC_DQ32
VMC_DQ38
VMC_DQ39
VMC_DQ34
VMC_DQ36
VMC_DQ35
VMC_DM5
VMC_DM4
VMC_WDQS5
VMC_RDQS5
VMC_WDQS4
VMC_RDQS4
VMC_DQ52
VMC_DQ51
VMC_DQ55
VMC_DQ48
VMC_DQ49
VMC_DQ54
VMC_DQ50
VMC_DQ53
VMC_DQ62
VMC_DQ59
VMC_DQ63
VMC_DQ58
VMC_DQ56
VMC_DQ60
VMC_DQ57
VMC_DQ61
VMC_DM6
VMC_DM7
VMC_WDQS6
VMC_RDQS6
VMC_WDQS7
VMC_RDQS7
VMC_CLK0
VMC_CLK0#
VMC_CLK1
VMC_CLK1#
[13] VMC_BA2
[13] VMC_BA1
[13] VMC_BA0
[13] VMC_MA12
[13] VMC_MA11
[13] VMC_MA10
[13] VMC_MA9
[13] VMC_MA8
[13] VMC_MA7
[13] VMC_MA6
[13] VMC_MA5
[13] VMC_MA4
[13] VMC_MA3
[13] VMC_MA2
[13] VMC_MA1
[13] VMC_MA0
[13] VMC_ODT
[13] VMC_CKE
[13] VMC_CS0#
[13] VMC_WE#
[13] VMC_RAS#
[13] VMC_CAS#
[13] VMC_MA5H
[13] VMC_MA4H
[13] VMC_MA3H
[13] VMC_MA2H
H5PS5162FFR-25C
AKD5FG-TW03
IC SDRAM(84P) H5PS5162FFR-25C(FBGA)
NB9P-GE2/NB9P-GS/NB9M: 50% FBVDD
NB9M-GE:50% , R133(1K)
NB9M-GE: 50% ,R632 (1K)
[13,14,17,26,44] +1.8V
[13] VMC_CLK0
[13] VMC_CLK0#
[13] VMC_CLK1
[13] VMC_CLK1#
R587 475/F_4
R571 475/F_4
NB9M/NB9P-GS/NB9P-GE2: 475R
C823 1000P/50V_4
C469 .01U/16V_4
C826 .1U/10V_4
C404 4.7U/6.3V_6
C255 1000P/50V_4
C825 .1U/10V_4
C804 4.7U/6.3V_6
C828 1000P/50V_4
C241 .01U/16V_4
C480 .1U/10V_4
C831 4.7U/6.3V_6
C484 1000P/50V_4
C489 .01U/16V_4
C819 .1U/10V_4
C832 4.7U/6.3V_6
[13] VMC_DQ[63..0]
[13] VMC_DM[7..0]
[13] VMC_WDQS[7..0]
[13] VMC_RDQS[7..0]

CS14752FB11 RES CHIP 475 1/16W +-1%(0402)

VRAM Vendor

NB9M-GE	1	3
NB9P-GS	2	

3	AKD5FG-T501	IC SDRAM(84P) K4N51163QG-HC25(FBGA)	Samsung
2	AKD5FG-T^03	IC SDRAM(84P)HYB18T512161B2F-25(TFBGA)	Qimonda
1	AKD5FG-TW31	IC SDRAM(84P) HY5PS121621CFP-25(FBGA)	Hynix

NB5

PROJECT : UT7
Quanta Computer Inc.

Size	Document Number	Rev
Custom	NV9X VRAM-2(GDDR2 BGA84)	E3A

Date: Friday, July 18, 2008 Sheet 18 of 46

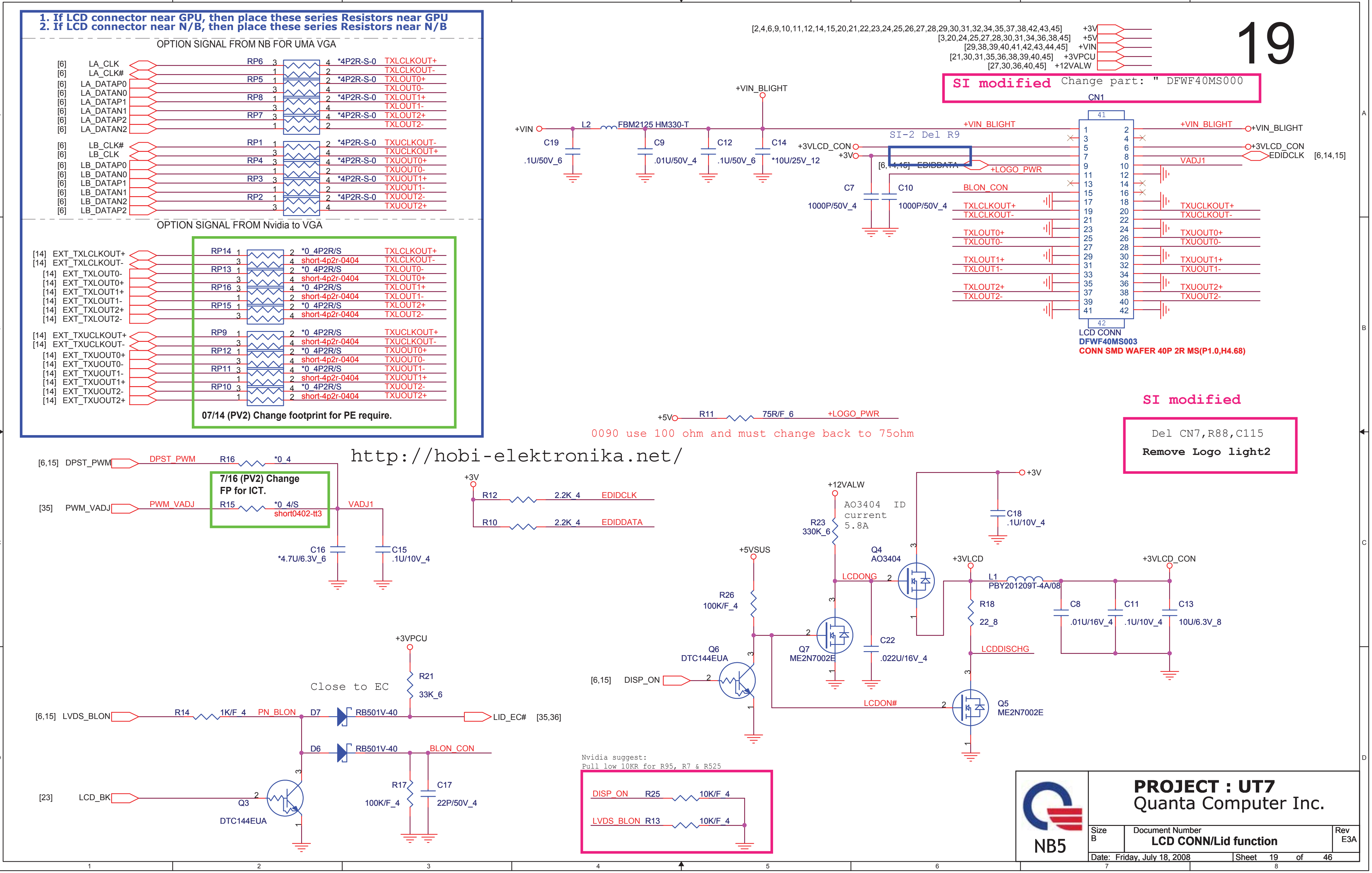

1. If LCD connector near GPU, then place these series Resistors near GPU
2. If LCD connector near N/B, then place these series Resistors near N/B
OPTION SIGNAL FROM NB FOR UMA VGA
[6] LA_CLK
[6] LA_CLK#
[6] LA_DATAP0
[6] LA_DATAN0
[6] LA_DATAP1
[6] LA_DATAN1
[6] LA_DATAP2
[6] LA_DATAN2
RP6 *4P2R-S-0 TXLCLKOUT+ TXLCLKOUT-
RP5 *4P2R-S-0 TXLOUT0+ TXLOUT0-
RP8 *4P2R-S-0 TXLOUT1+ TXLOUT1-
RP7 *4P2R-S-0 TXLOUT2+ TXLOUT2-
[6] LB_CLK#
[6] LB_CLK
[6] LB_DATAP0
[6] LB_DATAN0
[6] LB_DATAP1
[6] LB_DATAN1
[6] LB_DATAN2
[6] LB_DATAP2
RP1 *4P2R-S-0 TXUCLKOUT- TXUCLKOUT+
RP4 *4P2R-S-0 TXUOUT0+ TXUOUT0-
RP3 *4P2R-S-0 TXUOUT1+ TXUOUT1-
RP2 *4P2R-S-0 TXUOUT2- TXUOUT2+
OPTION SIGNAL FROM Nvidia to VGA
[14] EXT_TXLCLKOUT+
[14] EXT_TXLCLKOUT-
[14] EXT_TXLOUT0-
[14] EXT_TXLOUT0+
[14] EXT_TXLOUT1+
[14] EXT_TXLOUT1-
[14] EXT_TXLOUT2+
[14] EXT_TXLOUT2-
RP14 *0_4P2R/S short-4p2r-0404 TXLCLKOUT+ TXLCLKOUT-
RP13 *0_4P2R/S short-4p2r-0404 TXLOUT0- TXLOUT0+
RP16 *0_4P2R/S short-4p2r-0404 TXLOUT1+ TXLOUT1-
RP15 *0_4P2R/S short-4p2r-0404 TXLOUT2+ TXLOUT2-
[14] EXT_TXUCLKOUT+
[14] EXT_TXUCLKOUT-
[14] EXT_TXUOUT0+
[14] EXT_TXUOUT0-
[14] EXT_TXUOUT1-
[14] EXT_TXUOUT1+
[14] EXT_TXUOUT2-
[14] EXT_TXUOUT2+
RP9 *0_4P2R/S short-4p2r-0404 TXUCLKOUT+ TXUCLKOUT-
RP12 *0_4P2R/S short-4p2r-0404 TXUOUT0+ TXUOUT0-
RP11 *0_4P2R/S short-4p2r-0404 TXUOUT1- TXUOUT1+
RP10 *0_4P2R/S short-4p2r-0404 TXUOUT2- TXUOUT2+
07/14 (PV2) Change footprint for PE require.
[2,4,6,9,10,11,12,14,15,20,21,22,23,24,25,26,27,28,29,30,31,32,34,35,37,38,42,43,45] +3V
[3,20,24,25,27,28,30,31,34,36,38,45] +5V
[29,38,39,40,41,42,43,44,45] +VIN
[21,30,31,35,36,38,39,40,45] +3VPCU
[27,30,36,40,45] +12VALW
19
SI modified
Change part: " DFWF40MS000
CN1
+VIN_BLIGHT
+VIN
L2 FBM2125 HM330-T
C19 .1U/50V_6
C9 .01U/50V_4
C12 .1U/50V_6
C14 *10U/25V_12
+3VLCD_CON
+3V
SI-2 Del R9
[6,14,15] EDIDDATA
+LOGO_PWR
C7 1000P/50V_4
C10 1000P/50V_4
BLON_CON
TXLCLKOUT+ TXLCLKOUT-
TXLOUT0+ TXLOUT0-
TXLOUT1+ TXLOUT1-
TXLOUT2+ TXLOUT2-
+VIN_BLIGHT
+3VLCD_CON
EDIDCLK [6,14,15]
VADJ1
TXUCLKOUT+ TXUCLKOUT-
TXUOUT0+ TXUOUT0-
TXUOUT1+ TXUOUT1-
TXUOUT2+ TXUOUT2-
LCD CONN
DFWF40MS003
CONN SMD WAFER 40P 2R MS(P1.0,H4.68)
SI modified
+5V R11 75R/F_6 +LOGO_PWR
0090 use 100 ohm and must change back to 75ohm
Del CN7,R88,C115
Remove Logo light2
[6,15] DPST_PWM DPST_PWM R16 *0_4
7/16 (PV2) Change FP for ICT.
[35] PWM_VADJ PWM_VADJ R15 *0_4/S short0402-tt3 VADJ1
C16 *4.7U/6.3V_6
C15 .1U/10V_4
+3V
R12 2.2K_4 EDIDCLK
R10 2.2K_4 EDIDDATA
+12VALW
AO3404 ID current 5.8A
R23 330K_6
Q4 AO3404
+3V
C18 .1U/10V_4
+5VSUS
R26 100K/F_4
LCDONG
+3VLCD
L1 PBY201209T-4A/08
+3VLCD_CON
R18 22_8
C8 .01U/16V_4
C11 .1U/10V_4
C13 10U/6.3V_8
Q7 ME2N7002E
C22 .022U/16V_4
LCDDISCHG
Q6 DTC144EUA
[6,15] DISP_ON
LCDON#
Q5 ME2N7002E
+3VPCU
R21 33K_6
Close to EC
[6,15] LVDS_BLON R14 1K/F_4 PN_BLON D7 RB501V-40 LID_EC# [35,36]
D6 RB501V-40 BLON_CON
[23] LCD_BK Q3 DTC144EUA
R17 100K/F_4
C17 22P/50V_4
Nvidia suggest:
Pull low 10KR for R95, R7 & R525
DISP_ON R25 10K/F_4
LVDS_BLON R13 10K/F_4
NB5

http://hobi-elektronika.net/

PROJECT : UT7
Quanta Computer Inc.

Size B
Document Number **LCD CONN/Lid function**
Rev E3A
Date: Friday, July 18, 2008
Sheet 19 of 46

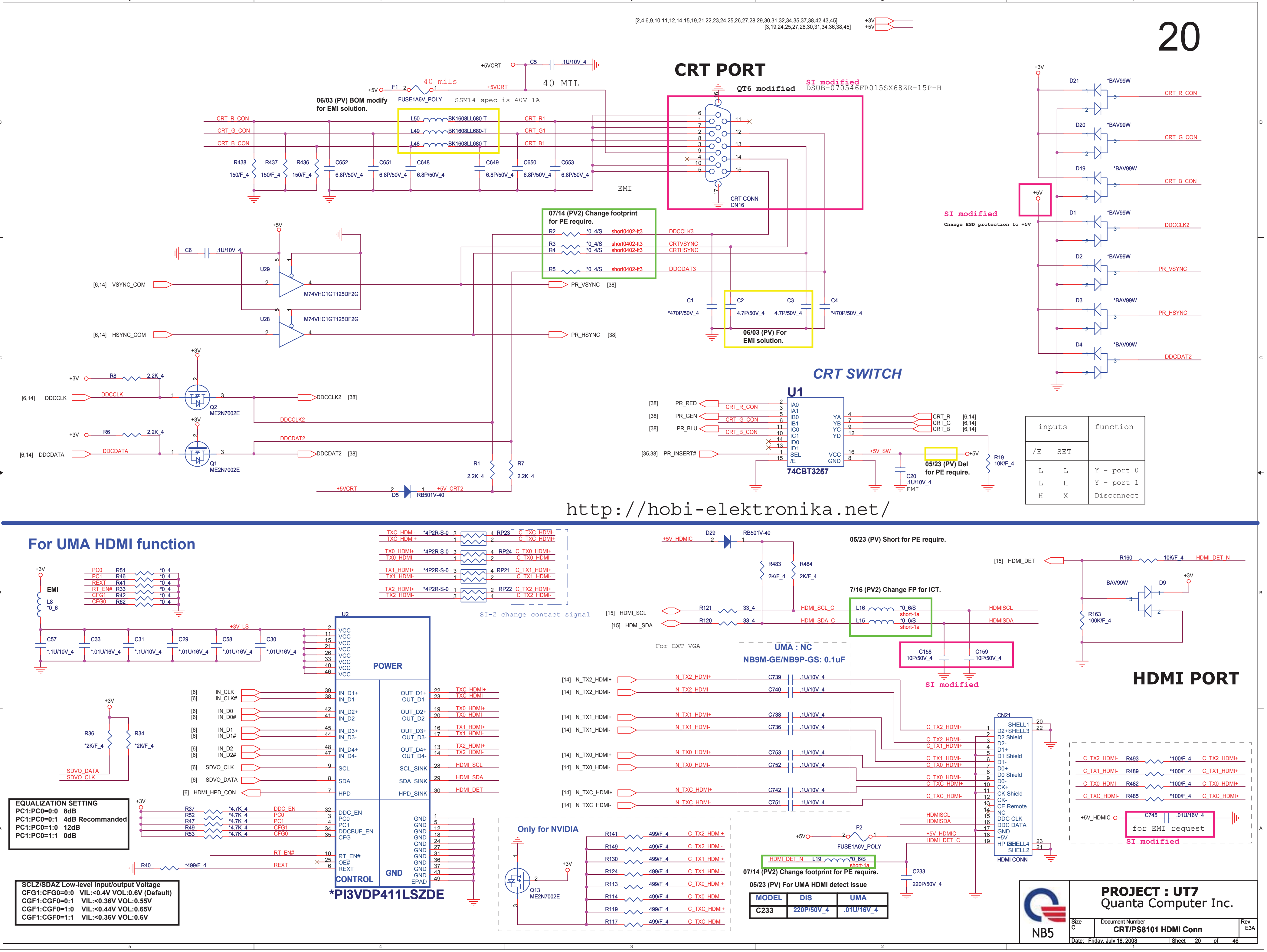

CRT PORT
QT6 modified
SI modified
DSUB-070546FR015SX68ZR-15P-H
CRT CONN
CN16
EMI
+5VCRT
C5
.1U/10V_4
F1
40 mils
40 MIL
FUSE1A6V_POLY
SSM14 spec is 40V 1A
06/03 (PV) BOM modify for EMI solution.
CRT_R_CON
CRT_G_CON
CRT_B_CON
L50
L49
L48
BK1608LL680-T
CRT_R1
CRT_G1
CRT_B1
R438
R437
R436
150/F_4
C652
C651
C648
C649
C650
C653
6.8P/50V_4
07/14 (PV2) Change footprint for PE require.
R2
R3
R4
R5
*0_4/S
short0402-tt3
DDCCLK3
CRTVSYNC
CRTHSYNC
DDCDAT3
C6
.1U/10V_4
U29
U28
M74VHC1GT125DF2G
[6,14] VSYNC_COM
[6,14] HSYNC_COM
PR_VSYNC [38]
PR_HSYNC [38]
C1
C2
C3
C4
*470P/50V_4
4.7P/50V_4
06/03 (PV) For EMI solution.
+3V
R8
R6
2.2K_4
[6,14] DDCCLK
[6,14] DDCDATA
DDCCLK
DDCDATA
Q2
Q1
ME2N7002E
DDCCLK2 [38]
DDCDAT2 [38]
DDCCLK2
DDCDAT2
R1
R7
2.2K_4
+5VCRT
D5
RB501V-40
+5V_CRT2
CRT SWITCH
U1
74CBT3257
[38] PR_RED
[38] PR_GEN
[38] PR_BLU
[35,38] PR_INSERT#
IA0 IA1 IB0 IB1 IC0 IC1 ID0 ID1 SEL /E
YA YB YC YD VCC GND
CRT_R [6,14]
CRT_G [6,14]
CRT_B [6,14]
+5V_SW
05/23 (PV) Del for PE require.
C20
.1U/10V_4
R19
10K/F_4
D21 D20 D19 D1 D2 D3 D4
*BAV99W
CRT_R_CON
CRT_G_CON
CRT_B_CON
DDCCLK2
PR_VSYNC
PR_HSYNC
DDCDAT2
SI modified
Change ESD protection to +5V
+5V
[2,4,6,9,10,11,12,14,15,19,21,22,23,24,25,26,27,28,29,30,31,32,34,35,37,38,42,43,45] +3V
[3,19,24,25,27,28,30,31,34,36,38,45] +5V
http://hobi-elektronika.net/
For UMA HDMI function
EMI
L8
*0_6
PC0 PC1 REXT RT_EN# CFG1 CFG0
R51 R46 R41 R33 R42 R62
*0_4
+3V_LS
C57 C33 C31 C29 C58 C30
*.1U/10V_4
*.01U/16V_4
U2
VCC
POWER
IN_D1+ IN_D1- IN_D2+ IN_D2- IN_D3+ IN_D3- IN_D4+ IN_D4-
SCL SDA HPD
OUT_D1+ OUT_D1- OUT_D2+ OUT_D2- OUT_D3+ OUT_D3- OUT_D4+ OUT_D4-
SCL_SINK SDA_SINK HPD_SINK
DDC_EN PC0 PC1 DDCBUF_EN CFG
RT_EN# OE# REXT
CONTROL
GND
EPAD
*PI3VDP411LSZDE
[6] IN_CLK
[6] IN_CLK#
[6] IN_D0
[6] IN_D0#
[6] IN_D1
[6] IN_D1#
[6] IN_D2
[6] IN_D2#
[6] SDVO_CLK
[6] SDVO_DATA
[6] HDMI_HPD_CON
TXC_HDMI+ TXC_HDMI-
TX0_HDMI+ TX0_HDMI-
TX1_HDMI+ TX1_HDMI-
TX2_HDMI+ TX2_HDMI-
HDMI_SCL HDMI_SDA HDMI_DET
R36 R34
*2K/F_4
SDVO_DATA
SDVO_CLK
R37 R52 R47 R49 R53
*4.7K_4
DDC_EN
R40
*499/F_4
RT_EN#
REXT
RP23 RP24 RP21 RP22
*4P2R-S-0
C_TXC_HDMI- C_TXC_HDMI+
C_TX0_HDMI+ C_TX0_HDMI-
C_TX1_HDMI+ C_TX1_HDMI-
C_TX2_HDMI+ C_TX2_HDMI-
SI-2 change contact signal
Only for NVIDIA
Q13
ME2N7002E
R141 R149 R130 R124 R113 R114 R119 R117
499/F_4
+5V_HDMIC
D29
RB501V-40
R483 R484
2K/F_4
05/23 (PV) Short for PE require.
7/16 (PV2) Change FP for ICT.
[15] HDMI_SCL
[15] HDMI_SDA
R121 R120
33_4
HDMI_SCL_C
HDMI_SDA_C
L16 L15
*0_6/S
short-1a
HDMISCL
HDMISDA
C158 C159
10P/50V_4
SI modified
For EXT VGA
UMA : NC
NB9M-GE/NB9P-GS: 0.1uF
[14] N_TX2_HDMI+
[14] N_TX2_HDMI-
[14] N_TX1_HDMI+
[14] N_TX1_HDMI-
[14] N_TX0_HDMI+
[14] N_TX0_HDMI-
[14] N_TXC_HDMI+
[14] N_TXC_HDMI-
C739 C740 C738 C736 C753 C752 C742 C751
.1U/10V_4
[15] HDMI_DET
R160
10K/F_4
HDMI_DET_N
BAV99W
D9
R163
100K/F_4
HDMI PORT
CN21
SHELL1 D2+SHELL3 D2 Shield D2- D1+ D1 Shield D1- D0+ D0 Shield D0- CK+ CK Shield CK- CE Remote NC DDC CLK DDC DATA GND +5V HP DET SHELL4 SHELL2
HDMI CONN
F2
FUSE1A6V_POLY
HDMI_DET_N
L19
*0_6/S
07/14 (PV2) Change footprint for PE require.
05/23 (PV) For UMA HDMI detect issue
C233
220P/50V_4
R493 R489 R482 R485
*100/F_4
C745
.01U/16V_4
for EMI request
SI modified

inputs		function
/E	SET	
L	L	Y - port 0
L	H	Y - port 1
H	X	Disconnect

EQUALIZATION SETTING
PC1:PC0=0:0 8dB
PC1:PC0=0:1 4dB Recommanded
PC1:PC0=1:0 12dB
PC1:PC0=1:1 0dB

SCLZ/SDAZ Low-level input/output Voltage
CFG1:CFG0=0:0 VIL:<0.4V VOL:0.6V (Default)
CGF1:CGF0=0:1 VIL:<0.36V VOL:0.55V
CGF1:CGF0=1:0 VIL:<0.44V VOL:0.65V
CGF1:CGF0=1:1 VIL:<0.36V VOL:0.6V

MODEL	DIS	UMA
C233	220P/50V_4	.01U/16V_4

PROJECT : UT7
Quanta Computer Inc.
NB5
Size C
Document Number CRT/PS8101 HDMI Conn
Rev E3A
Date: Friday, July 18, 2008
Sheet 20 of 46

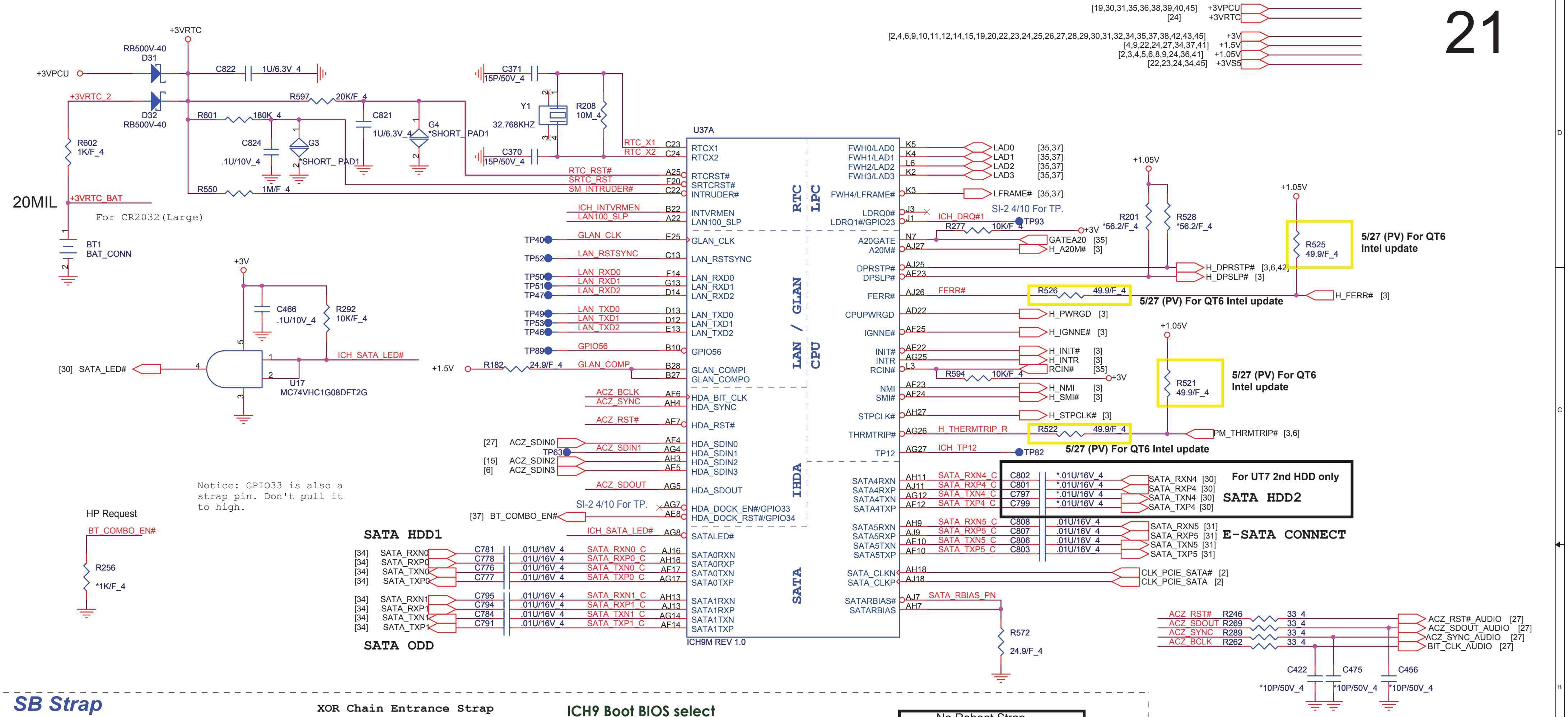
[19,30,31,35,36,38,39,40,45] +3VPCU
[24] +3VRTC
[2,4,6,9,10,11,12,14,15,19,20,22,23,24,25,26,27,28,29,30,31,32,34,35,37,38,42,43,45] +3V
[4,9,22,24,27,34,37,41] +1.5V
[2,3,4,5,6,8,9,24,36,41] +1.05V
[22,23,24,34,45] +3VS5
+3VRTC
RB500V-40
D31
+3VPCU
C822
1U/6.3V_4
+3VRTC_2
D32
RB500V-40
R597
20K/F_4
R601
180K_4
C821
1U/6.3V_4
G4
*SHORT_PAD1
R602
1K/F_4
C824
.1U/10V_4
G3
*SHORT_PAD1
R550
1M/F_4
20MIL
+3VRTC_BAT
For CR2032(Large)
BT1
BAT_CONN
C371
15P/50V_4
Y1
32.768KHZ
R208
10M_4
C370
15P/50V_4
U37A
RTC_X1
RTC_X2
RTC_RST#
SRTC_RST
SM_INTRUDER#
ICH_INTVRMEN
LAN100_SLP
GLAN_CLK
LAN_RSTSYNC
LAN_RXD0
LAN_RXD1
LAN_RXD2
LAN_TXD0
LAN_TXD1
LAN_TXD2
GPIO56
GLAN_COMP
+1.5V
R182
24.9/F_4
TP40
TP52
TP50
TP51
TP47
TP49
TP53
TP46
TP89
+3V
C466
.1U/10V_4
R292
10K/F_4
ICH_SATA_LED#
[30] SATA_LED#
U17
MC74VHC1G08DFT2G
ACZ_BCLK
ACZ_SYNC
ACZ_RST#
[27] ACZ_SDIN0
TP63
ACZ_SDIN1
[15] ACZ_SDIN2
[6] ACZ_SDIN3
ACZ_SDOUT
Notice: GPIO33 is also a strap pin. Don't pull it to high.
SI-2 4/10 For TP.
[37] BT_COMBO_EN#
HP Request
BT_COMBO_EN#
R256
*1K/F_4
SATA HDD1
[34] SATA_RXN0
[34] SATA_RXP0
[34] SATA_TXN0
[34] SATA_TXP0
C781
C778
C776
C777
.01U/16V_4
SATA_RXN0_C
SATA_RXP0_C
SATA_TXN0_C
SATA_TXP0_C
[34] SATA_RXN1
[34] SATA_RXP1
[34] SATA_TXN1
[34] SATA_TXP1
C795
C794
C784
C791
SATA_RXN1_C
SATA_RXP1_C
SATA_TXN1_C
SATA_TXP1_C
SATA ODD
RTCX1
RTCX2
RTCRST#
SRTCRST#
INTRUDER#
INTVRMEN
LAN100_SLP
GLAN_CLK
LAN_RSTSYNC
LAN_RXD0
LAN_RXD1
LAN_RXD2
LAN_TXD0
LAN_TXD1
LAN_TXD2
GPIO56
GLAN_COMPI
GLAN_COMPO
HDA_BIT_CLK
HDA_SYNC
HDA_RST#
HDA_SDIN0
HDA_SDIN1
HDA_SDIN2
HDA_SDIN3
HDA_SDOUT
HDA_DOCK_EN#/GPIO33
HDA_DOCK_RST#/GPIO34
SATALED#
SATA0RXN
SATA0RXP
SATA0TXN
SATA0TXP
SATA1RXN
SATA1RXP
SATA1TXN
SATA1TXP
ICH9M REV 1.0
RTC
LPC
LAN / GLAN
CPU
IHDA
SATA
FWH0/LAD0
FWH1/LAD1
FWH2/LAD2
FWH3/LAD3
FWH4/LFRAME#
LDRQ0#
LDRQ1#/GPIO23
A20GATE
A20M#
DPRSTP#
DPSLP#
FERR#
CPUPWRGD
IGNNE#
INIT#
INTR
RCIN#
NMI
SMI#
STPCLK#
THRMTRIP#
TP12
SATA4RXN
SATA4RXP
SATA4TXN
SATA4TXP
SATA5RXN
SATA5RXP
SATA5TXN
SATA5TXP
SATA_CLKN
SATA_CLKP
SATARBIAS#
SATARBIAS
LAD0 [35,37]
LAD1 [35,37]
LAD2 [35,37]
LAD3 [35,37]
LFRAME# [35,37]
ICH_DRQ#1
SI-2 4/10 For TP.
R277 10K/F_4
TP93
+3V
GATEA20 [35]
H_A20M# [3]
+1.05V
R201
*56.2/F_4
R528
*56.2/F_4
H_DPRSTP# [3,6,42]
H_DPSLP# [3]
+1.05V
R525
49.9/F_4
5/27 (PV) For QT6 Intel update
FERR#
R526 49.9/F_4
5/27 (PV) For QT6 Intel update
H_FERR# [3]
H_PWRGD [3]
H_IGNNE# [3]
H_INIT# [3]
H_INTR [3]
RCIN# [35]
R594 10K/F_4
+3V
+1.05V
R521
49.9/F_4
5/27 (PV) For QT6 Intel update
H_NMI [3]
H_SMI# [3]
H_STPCLK# [3]
H_THERMTRIP_R
R522 49.9/F_4
PM_THRMTRIP# [3,6]
ICH_TP12
TP82
5/27 (PV) For QT6 Intel update
SATA_RXN4_C
SATA_RXP4_C
SATA_TXN4_C
SATA_TXP4_C
C802
C801
C797
C799
*.01U/16V_4
SATA_RXN4 [30]
SATA_RXP4 [30]
SATA_TXN4 [30]
SATA_TXP4 [30]
For UT7 2nd HDD only
SATA HDD2
SATA_RXN5_C
SATA_RXP5_C
SATA_TXN5_C
SATA_TXP5_C
C808
C807
C806
C803
.01U/16V_4
SATA_RXN5 [31]
SATA_RXP5 [31]
SATA_TXN5 [31]
SATA_TXP5 [31]
E-SATA CONNECT
CLK_PCIE_SATA# [2]
CLK_PCIE_SATA [2]
SATA_RBIAS_PN
R572
24.9/F_4
ACZ_RST# R246 33_4 ACZ_RST#_AUDIO [27]
ACZ_SDOUT R269 33_4 ACZ_SDOUT_AUDIO [27]
ACZ_SYNC R289 33_4 ACZ_SYNC_AUDIO [27]
ACZ_BCLK R262 33_4 BIT_CLK_AUDIO [27]
C422 *10P/50V_4
C475 *10P/50V_4
C456 *10P/50V_4

SB Strap

XOR Chain Entrance Strap

ICH_TP3	HDA_SDOUT	Description
0	0	RSVD
0	1	Enter XOR Chain
1	0	Normal opration(Default)
1	1	Set PCIE port config bit 1

ICH9 Boot BIOS select

STRAP	PCI_GNT0#	SPI_CS#1
SPI	0	1
PCI	1	0
LPC	1	1

(default)

ICH9-M Internal VR Enable strap (Internal VR for Vccsus1_05,VccSus1_5 and VccCL1_5)

INTVRMEN	Low = Internal VR disable High = Internal VR enable(Default)

ICH9-M LAN100_SLP Strap (Internal VR for VccLAN1_05 and VccCL1.05)

LAN100_SLP	Low = Internal VR disable High = Internal VR enable(Default)

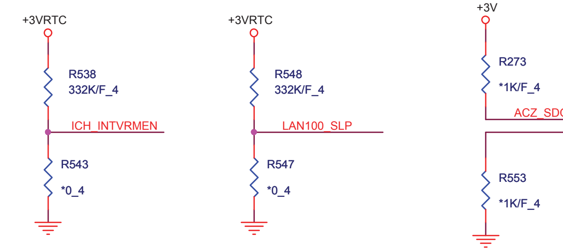
+3VRTC
R538
332K/F_4
ICH_INTVRMEN
R543
*0_4
+3VRTC
R548
332K/F_4
LAN100_SLP
R547
*0_4
+3V
R273
*1K/F_4
ACZ_SDOUT
ICH_TP3 [23]
R553
*1K/F_4

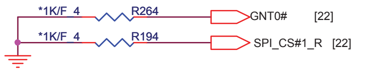
*1K/F_4
R264
GNT0# [22]
*1K/F_4
R194
SPI_CS#1_R [22]

A16 swap override strap

PCI_GNT#3	Low = A16 swap override enabled Hi = Default

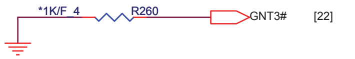
*1K/F_4
R260
GNT3# [22]

No Reboot Strap

ACZ_SPKR	Low: Default Hi: No reboot

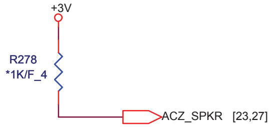
+3V
R278
*1K/F_4
ACZ_SPKR [23,27]

TPM physical presence

ICH_GPIO57	Low: Default

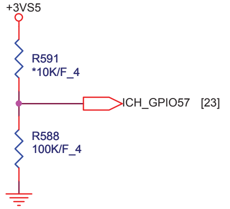
+3VS5
R591
*10K/F_4
ICH_GPIO57 [23]
R588
100K/F_4

For GM UMA only

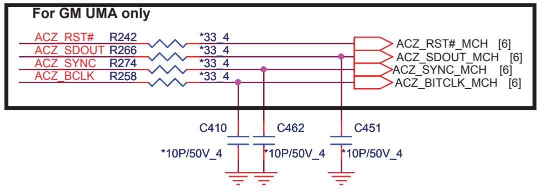
ACZ_RST# R242 *33_4 ACZ_RST#_MCH [6]
ACZ_SDOUT R266 *33_4 ACZ_SDOUT_MCH [6]
ACZ_SYNC R274 *33_4 ACZ_SYNC_MCH [6]
ACZ_BCLK R258 *33_4 ACZ_BITCLK_MCH [6]
C410 *10P/50V_4
C462 *10P/50V_4
C451 *10P/50V_4

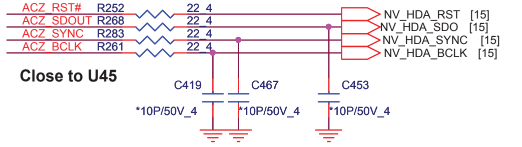
ACZ_RST# R252 22_4 NV_HDA_RST [15]
ACZ_SDOUT R268 22_4 NV_HDA_SDO [15]
ACZ_SYNC R283 22_4 NV_HDA_SYNC [15]
ACZ_BCLK R261 22_4 NV_HDA_BCLK [15]
C419 *10P/50V_4
C467 *10P/50V_4
C453 *10P/50V_4

Close to U45

http://hobi-elektronika.net/

NB5

PROJECT : UT7
Quanta Computer Inc.

Size	Document Number	Rev
Custom	ICH9-M Host 1/4	E3A

Date: Friday, July 18, 2008 Sheet 21 of 46

SWAP PCIE PORT6 to PORT2 (Lan and New card swap) -->Rename the port name by function and port

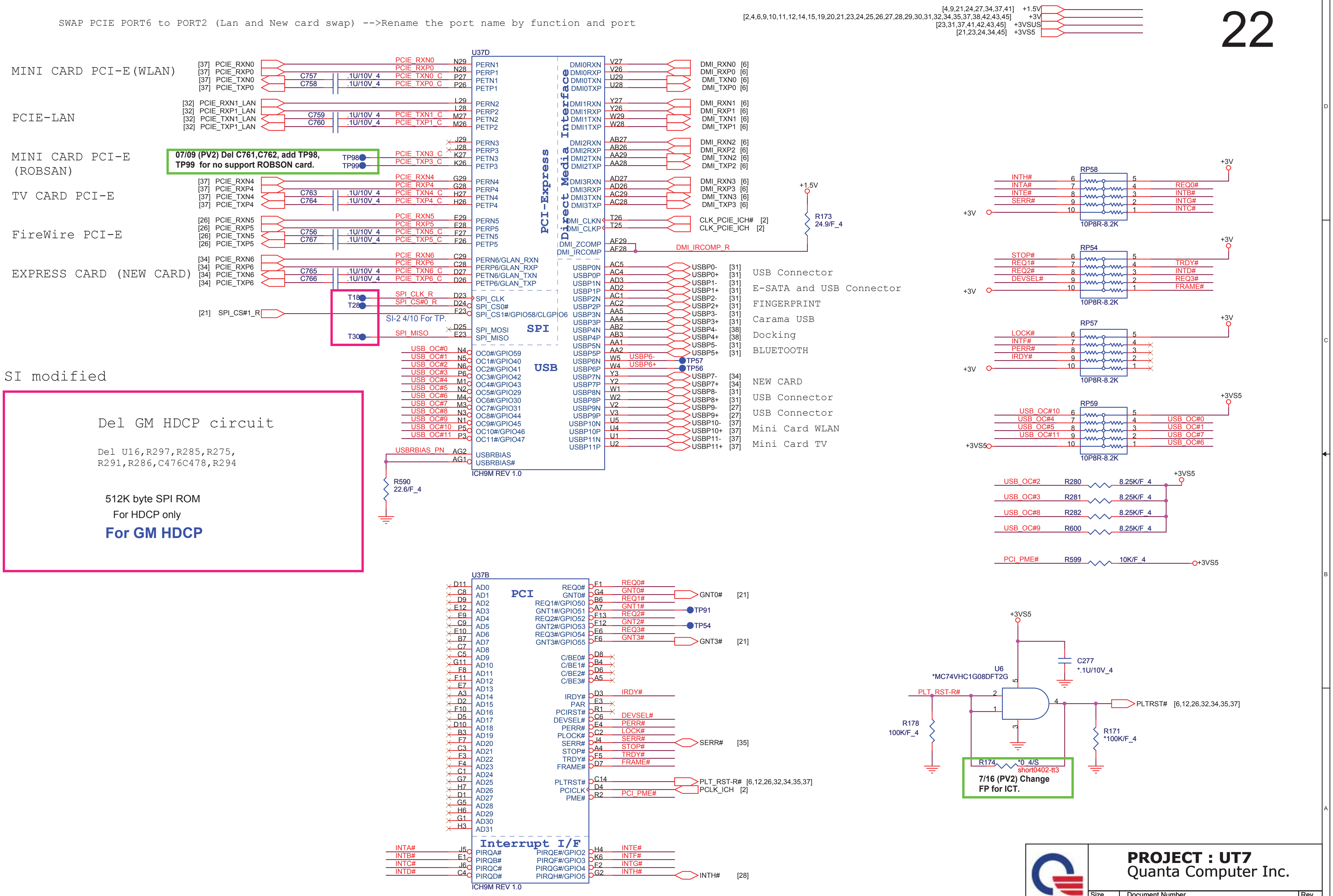
[4,9,21,24,27,34,37,41] +1.5V
[2,4,6,9,10,11,12,14,15,19,20,21,23,24,25,26,27,28,29,30,31,32,34,35,37,38,42,43,45] +3V
[23,31,37,41,42,43,45] +3VSUS
[21,23,24,34,45] +3VS5
MINI CARD PCI-E(WLAN)
PCIE-LAN
MINI CARD PCI-E (ROBSAN)
TV CARD PCI-E
FireWire PCI-E
EXPRESS CARD (NEW CARD)
U37D
[37] PCIE_RXN0
[37] PCIE_RXP0
[37] PCIE_TXN0
[37] PCIE_TXP0
C757 .1U/10V_4
C758 .1U/10V_4
PCIE_RXN0
PCIE_RXP0
PCIE_TXN0_C
PCIE_TXP0_C
[32] PCIE_RXN1_LAN
[32] PCIE_RXP1_LAN
[32] PCIE_TXN1_LAN
[32] PCIE_TXP1_LAN
C759 .1U/10V_4
C760 .1U/10V_4
PCIE_TXN1_C
PCIE_TXP1_C
07/09 (PV2) Del C761,C762, add TP98, TP99 for no support ROBSON card.
TP98
TP99
PCIE_TXN3_C
PCIE_TXP3_C
[37] PCIE_RXN4
[37] PCIE_RXP4
[37] PCIE_TXN4
[37] PCIE_TXP4
C763 .1U/10V_4
C764 .1U/10V_4
PCIE_RXN4
PCIE_RXP4
PCIE_TXN4_C
PCIE_TXP4_C
[26] PCIE_RXN5
[26] PCIE_RXP5
[26] PCIE_TXN5
[26] PCIE_TXP5
C756 .1U/10V_4
C767 .1U/10V_4
PCIE_RXN5
PCIE_RXP5
PCIE_TXN5_C
PCIE_TXP5_C
[34] PCIE_RXN6
[34] PCIE_RXP6
[34] PCIE_TXN6
[34] PCIE_TXP6
C765 .1U/10V_4
C766 .1U/10V_4
PCIE_RXN6
PCIE_RXP6
PCIE_TXN6_C
PCIE_TXP6_C
N29 PERN1
N28 PERP1
P27 PETN1
P26 PETP1
L29 PERN2
L28 PERP2
M27 PETN2
M26 PETP2
J29 PERN3
J28 PERP3
K27 PETN3
K26 PETP3
G29 PERN4
G28 PERP4
H27 PETN4
H26 PETP4
E29 PERN5
E28 PERP5
F27 PETN5
F26 PETP5
C29 PERN6/GLAN_RXN
C28 PERP6/GLAN_RXP
D27 PETN6/GLAN_TXN
D26 PETP6/GLAN_TXP
PCI-Express
Direct Media Interface
DMI0RXN V27
DMI0RXP V26
DMI0TXN U29
DMI0TXP U28
DMI1RXN Y27
DMI1RXP Y26
DMI1TXN W29
DMI1TXP W28
DMI2RXN AB27
DMI2RXP AB26
DMI2TXN AA29
DMI2TXP AA28
DMI3RXN AD27
DMI3RXP AD26
DMI3TXN AC29
DMI3TXP AC28
DMI_CLKN T26
DMI_CLKP T25
DMI_ZCOMP AF29
DMI_IRCOMP AF28
DMI_RXN0 [6]
DMI_RXP0 [6]
DMI_TXN0 [6]
DMI_TXP0 [6]
DMI_RXN1 [6]
DMI_RXP1 [6]
DMI_TXN1 [6]
DMI_TXP1 [6]
DMI_RXN2 [6]
DMI_RXP2 [6]
DMI_TXN2 [6]
DMI_TXP2 [6]
DMI_RXN3 [6]
DMI_RXP3 [6]
DMI_TXN3 [6]
DMI_TXP3 [6]
CLK_PCIE_ICH# [2]
CLK_PCIE_ICH [2]
DMI_IRCOMP_R
+1.5V
R173 24.9/F_4
T18
T28
T30
SPI_CLK_R
SPI_CS#0_R
[21] SPI_CS#1_R
SPI_MISO
SI-2 4/10 For TP.
D23 SPI_CLK
D24 SPI_CS0#
F23 SPI_CS1#/GPIO58/CLGPIO6
D25 SPI_MOSI
E23 SPI_MISO
SPI
USB_OC#0 N4 OC0#/GPIO59
USB_OC#1 N5 OC1#/GPIO40
USB_OC#2 N6 OC2#/GPIO41
USB_OC#3 P6 OC3#/GPIO42
USB_OC#4 M1 OC4#/GPIO43
USB_OC#5 N2 OC5#/GPIO29
USB_OC#6 M4 OC6#/GPIO30
USB_OC#7 M3 OC7#/GPIO31
USB_OC#8 N3 OC8#/GPIO44
USB_OC#9 N1 OC9#/GPIO45
USB_OC#10 P5 OC10#/GPIO46
USB_OC#11 P3 OC11#/GPIO47
USB
USBRBIAS_PN AG2 USBRBIAS
AG1 USBRBIAS#
R590 22.6/F_4
ICH9M REV 1.0
USBP0N AC5 USBP0- [31]
USBP0P AC4 USBP0+ [31]
USBP1N AD3 USBP1- [31]
USBP1P AD2 USBP1+ [31]
USBP2N AC1 USBP2- [31]
USBP2P AC2 USBP2+ [31]
USBP3N AA5 USBP3- [31]
USBP3P AA4 USBP3+ [31]
USBP4N AB2 USBP4- [38]
USBP4P AB3 USBP4+ [38]
USBP5N AA1 USBP5- [31]
USBP5P AA2 USBP5+ [31]
USBP6N W5 USBP6- TP57
USBP6P W4 USBP6+ TP56
USBP7N Y3 USBP7- [34]
USBP7P Y2 USBP7+ [34]
USBP8N W1 USBP8- [31]
USBP8P W2 USBP8+ [31]
USBP9N V2 USBP9- [27]
USBP9P V3 USBP9+ [27]
USBP10N U5 USBP10- [37]
USBP10P U4 USBP10+ [37]
USBP11N U1 USBP11- [37]
USBP11P U2 USBP11+ [37]
USB Connector
E-SATA and USB Connector
FINGERPRINT
Carama USB
Docking
BLUETOOTH
NEW CARD
USB Connector
USB Connector
Mini Card WLAN
Mini Card TV
+3V
RP58
INTH# 6
INTA# 7
INTE# 8
SERR# 9
10
5 REQ0#
4 INTB#
3 INTG#
2 INTC#
1
10P8R-8.2K
+3V
RP54
STOP# 6
REQ1# 7
REQ2# 8
DEVSEL# 9
10
5 TRDY#
4 INTD#
3 REQ3#
2 FRAME#
1
10P8R-8.2K
+3V
RP57
LOCK# 6
INTF# 7
PERR# 8
IRDY# 9
10
5
4
3
2
1
10P8R-8.2K
+3VS5
RP59
USB_OC#10 6
USB_OC#4 7
USB_OC#5 8
USB_OC#11 9
10
5
4 USB_OC#0
3 USB_OC#1
2 USB_OC#7
1 USB_OC#6
10P8R-8.2K
+3VS5
USB_OC#2 R280 8.25K/F_4
USB_OC#3 R281 8.25K/F_4
USB_OC#8 R282 8.25K/F_4
USB_OC#9 R600 8.25K/F_4
PCI_PME# R599 10K/F_4 +3VS5
U37B
PCI
D11 AD0
C8 AD1
D9 AD2
E12 AD3
E9 AD4
C9 AD5
E10 AD6
B7 AD7
C7 AD8
C5 AD9
G11 AD10
F8 AD11
F11 AD12
E7 AD13
A3 AD14
D2 AD15
F10 AD16
D5 AD17
D10 AD18
B3 AD19
F7 AD20
C3 AD21
F3 AD22
F4 AD23
C1 AD24
G7 AD25
H7 AD26
D1 AD27
G5 AD28
H6 AD29
G1 AD30
H3 AD31
REQ0# F1 REQ0#
GNT0# G4 GNT0# GNT0# [21]
REQ1#/GPIO50 B6 REQ1#
GNT1#/GPIO51 A7 GNT1# TP91
REQ2#/GPIO52 F13 REQ2#
GNT2#/GPIO53 F12 GNT2# TP54
REQ3#/GPIO54 E6 REQ3#
GNT3#/GPIO55 F6 GNT3# GNT3# [21]
C/BE0# D8
C/BE1# B4
C/BE2# D6
C/BE3# A5
IRDY# D3 IRDY#
PAR E3
PCIRST# R1
DEVSEL# C6 DEVSEL#
PERR# E4 PERR#
PLOCK# C2 LOCK#
SERR# J4 SERR# SERR# [35]
STOP# A4 STOP#
TRDY# F5 TRDY#
FRAME# D7 FRAME#
PLTRST# C14 PLT_RST-R# [6,12,26,32,34,35,37]
PCICLK D4 PCLK_ICH [2]
PME# R2 PCI_PME#
Interrupt I/F
INTA# J5 PIRQA#
INTB# E1 PIRQB#
INTC# J6 PIRQC#
INTD# C4 PIRQD#
PIRQE#/GPIO2 H4 INTE#
PIRQF#/GPIO3 K6 INTF#
PIRQG#/GPIO4 F2 INTG#
PIRQH#/GPIO5 G2 INTH# INTH# [28]
ICH9M REV 1.0
+3VS5
C277 *.1U/10V_4
U6 *MC74VHC1G08DFT2G
PLT_RST-R#
2
1
5
3
4
PLTRST# [6,12,26,32,34,35,37]
R178 100K/F_4
R171 *100K/F_4
R174 *0_4/S short0402-tt3
7/16 (PV2) Change FP for ICT.

SI modified

Del GM HDCP circuit

Del U16,R297,R285,R275,
R291,R286,C476C478,R294

512K byte SPI ROM

For HDCP only

For GM HDCP

NB5

PROJECT : UT7
Quanta Computer Inc.

Size	Document Number	Rev
Custom	ICH9-M PCIE 2/4	E3A

Date: Friday, July 18, 2008 Sheet 22 of 46

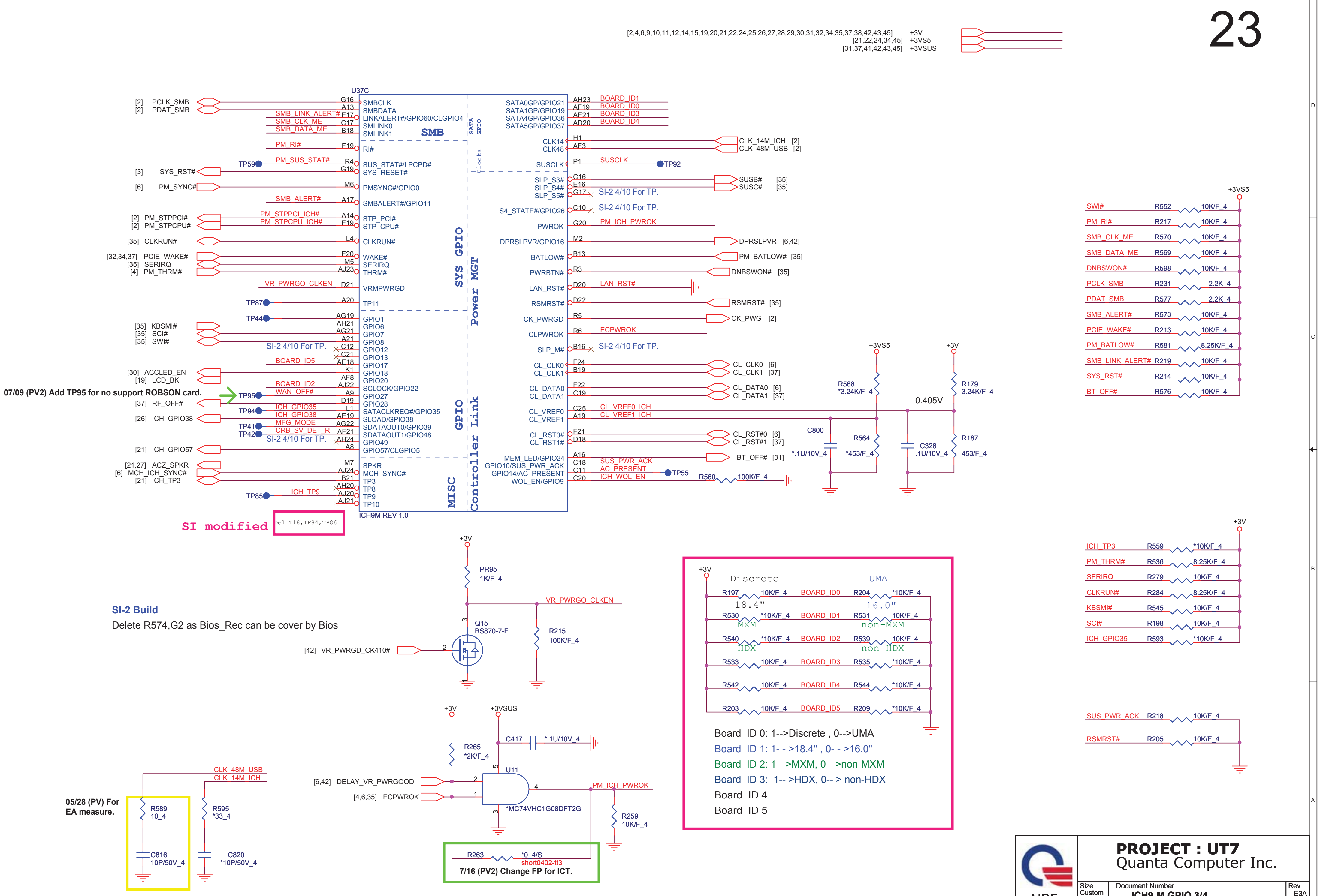
[2,4,6,9,10,11,12,14,15,19,20,21,22,24,25,26,27,28,29,30,31,32,34,35,37,38,42,43,45] +3V
[21,22,24,34,45] +3VS5
[31,37,41,42,43,45] +3VSUS
U37C
[2] PCLK_SMB G16 SMBCLK
[2] PDAT_SMB A13 SMBDATA
SMB_LINK_ALERT# E17 LINKALERT#/GPIO60/CLGPIO4
SMB_CLK_ME C17 SMLINK0
SMB_DATA_ME B18 SMLINK1
SMB
PM_RI# F19 RI#
TP59 PM_SUS_STAT# R4 SUS_STAT#/LPCPD#
[3] SYS_RST# G19 SYS_RESET#
[6] PM_SYNC# M6 PMSYNC#/GPIO0
SMB_ALERT# A17 SMBALERT#/GPIO11
[2] PM_STPPCI# PM_STPPCI_ICH# A14 STP_PCI#
[2] PM_STPCPU# PM_STPCPU_ICH# E19 STP_CPU#
[35] CLKRUN# L4 CLKRUN#
[32,34,37] PCIE_WAKE# E20 WAKE#
[35] SERIRQ M5 SERIRQ
[4] PM_THRM# AJ23 THRM#
VR_PWRGD_CLKEN D21 VRMPWRGD
TP87 A20 TP11
SYS GPIO
TP44 AG19 GPIO1
[35] KBSMI# AH21 GPIO6
[35] SCI# AG21 GPIO7
[35] SWI# A21 GPIO8
SI-2 4/10 For TP. C12 GPIO12
C21 GPIO13
BOARD_ID5 AE18 GPIO17
[30] ACCLED_EN K1 GPIO18
[19] LCD_BK AF8 GPIO20
BOARD_ID2 AJ22 SCLOCK/GPIO22
07/09 (PV2) Add TP95 for no support ROBSON card.
TP95 WAN_OFF# A9 GPIO27
[37] RF_OFF# D19 GPIO28
TP94 ICH_GPIO35 L1 SATACLKREQ#/GPIO35
[26] ICH_GPIO38 ICH_GPIO38 AE19 SLOAD/GPIO38
TP41 MFG_MODE AG22 SDATAOUT0/GPIO39
TP42 CRB_SV_DET_R AF21 SDATAOUT1/GPIO48
SI-2 4/10 For TP. AH24 GPIO49
[21] ICH_GPIO57 A8 GPIO57/CLGPIO5
GPIO
[21,27] ACZ_SPKR M7 SPKR
[6] MCH_ICH_SYNC# AJ24 MCH_SYNC#
[21] ICH_TP3 B21 TP3
AH20 TP8
TP85 ICH_TP9 AJ20 TP9
AJ21 TP10
MISC
ICH9M REV 1.0
SI modified
Del T18,TP84,TP86
SATA GPIO
SATA0GP/GPIO21 AH23 BOARD_ID1
SATA1GP/GPIO19 AF19 BOARD_ID0
SATA4GP/GPIO36 AE21 BOARD_ID3
SATA5GP/GPIO37 AD20 BOARD_ID4
Clocks
CLK14 H1 CLK_14M_ICH [2]
CLK48 AF3 CLK_48M_USB [2]
SUSCLK P1 SUSCLK TP92
SLP_S3# C16 SUSB# [35]
SLP_S4# E16 SUSC# [35]
SLP_S5# G17 SI-2 4/10 For TP.
S4_STATE#/GPIO26 C10 SI-2 4/10 For TP.
PWROK G20 PM_ICH_PWROK
DPRSLPVR/GPIO16 M2 DPRSLPVR [6,42]
BATLOW# B13 PM_BATLOW# [35]
PWRBTN# R3 DNBSWON# [35]
LAN_RST# D20 LAN_RST#
RSMRST# D22 RSMRST# [35]
CK_PWRGD R5 CK_PWG [2]
CLPWROK R6 ECPWROK
SLP_M# B16 SI-2 4/10 For TP.
Power MGT
CL_CLK0 F24 CL_CLK0 [6]
CL_CLK1 B19 CL_CLK1 [37]
CL_DATA0 F22 CL_DATA0 [6]
CL_DATA1 C19 CL_DATA1 [37]
CL_VREF0 C25 CL_VREF0_ICH
CL_VREF1 A19 CL_VREF1_ICH
CL_RST0# F21 CL_RST#0 [6]
CL_RST1# D18 CL_RST#1 [37]
MEM_LED/GPIO24 A16 BT_OFF# [31]
GPIO10/SUS_PWR_ACK C18 SUS_PWR_ACK
GPIO14/AC_PRESENT C11 AC_PRESENT
WOL_EN/GPIO9 C20 ICH_WOL_EN TP55
R560 100K/F_4
Controller Link
+3VS5 R568 *3.24K/F_4
+3V R179 3.24K/F_4
0.405V
C800 *.1U/10V_4
R564 *453/F_4
C328 .1U/10V_4
R187 453/F_4
+3VS5
SWI# R552 10K/F_4
PM_RI# R217 10K/F_4
SMB_CLK_ME R570 10K/F_4
SMB_DATA_ME R569 10K/F_4
DNBSWON# R598 10K/F_4
PCLK_SMB R231 2.2K_4
PDAT_SMB R577 2.2K_4
SMB_ALERT# R573 10K/F_4
PCIE_WAKE# R213 10K/F_4
PM_BATLOW# R581 8.25K/F_4
SMB_LINK_ALERT# R219 10K/F_4
SYS_RST# R214 10K/F_4
BT_OFF# R576 10K/F_4
+3V
ICH_TP3 R559 *10K/F_4
PM_THRM# R536 8.25K/F_4
SERIRQ R279 10K/F_4
CLKRUN# R284 8.25K/F_4
KBSMI# R545 10K/F_4
SCI# R198 10K/F_4
ICH_GPIO35 R593 *10K/F_4
SUS_PWR_ACK R218 10K/F_4
RSMRST# R205 10K/F_4
+3V
PR95 1K/F_4
VR_PWRGD_CLKEN
Q15 BS870-7-F
R215 100K/F_4
[42] VR_PWRGD_CK410#
+3V +3VSUS
C417 *.1U/10V_4
R265 *2K/F_4
U11
[6,42] DELAY_VR_PWRGOOD
[4,6,35] ECPWROK
*MC74VHC1G08DFT2G
PM_ICH_PWROK
R259 10K/F_4
R263 *0_4/S
short0402-tt3
7/16 (PV2) Change FP for ICT.
CLK_48M_USB
CLK_14M_ICH
05/28 (PV) For EA measure.
R589 10_4
C816 10P/50V_4
R595 *33_4
C820 *10P/50V_4
+3V
Discrete
UMA
R197 10K/F_4 BOARD_ID0 R204 *10K/F_4
18.4"
16.0"
R530 *10K/F_4 BOARD_ID1 R531 10K/F_4
MXM
non-MXM
R540 *10K/F_4 BOARD_ID2 R539 10K/F_4
HDX
non-HDX
R533 10K/F_4 BOARD_ID3 R535 *10K/F_4
R542 10K/F_4 BOARD_ID4 R544 *10K/F_4
R203 10K/F_4 BOARD_ID5 R209 *10K/F_4

SI-2 Build

Delete R574,G2 as Bios_Rec can be cover by Bios

Board ID 0: 1-->Discrete , 0-->UMA

Board ID 1: 1- - >18.4" , 0- - >16.0"

Board ID 2: 1-- >MXM, 0-- >non-MXM

Board ID 3: 1-- >HDX, 0-- > non-HDX

Board ID 4

Board ID 5

PROJECT : UT7

Quanta Computer Inc.

NB5

Size	Document Number	Rev
Custom	ICH9-M GPIO 3/4	E3A

Date: Friday, July 18, 2008 Sheet 23 of 46

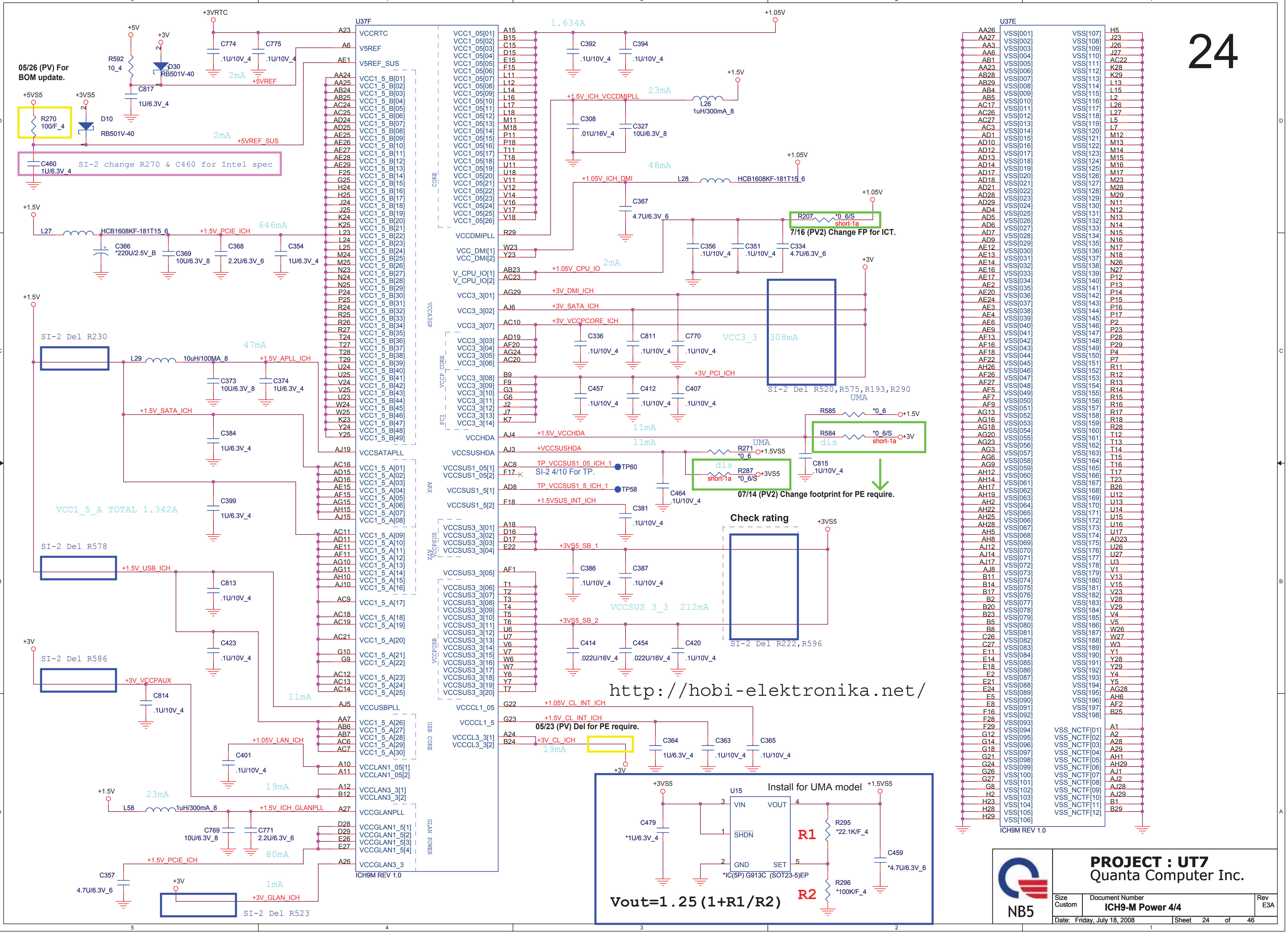
U37F
ICH9M REV 1.0
U37E
ICH9M REV 1.0
+3VRTC
+5V
+3V
R592
10_4
D30
RB501V-40
C817
1U/6.3V_4
C774
.1U/10V_4
C775
.1U/10V_4
2mA
+5VREF
05/26 (PV) For BOM update.
+5VS5
+3VS5
R270
100/F_4
D10
RB501V-40
2mA
+5VREF_SUS
C460
1U/6.3V_4
SI-2 change R270 & C460 for Intel spec
+1.5V
L27
HCB1608KF-181T15_6
+1.5V_PCIE_ICH
646mA
C366
*220U/2.5V_B
C369
10U/6.3V_8
C368
2.2U/6.3V_6
C354
1U/6.3V_4
SI-2 Del R230
47mA
L29
10uH/100MA_8
+1.5V_APLL_ICH
C373
10U/6.3V_8
C374
1U/6.3V_4
+1.5V_SATA_ICH
C384
1U/6.3V_4
C399
1U/6.3V_4
VCC1_5_A TOTAL 1.342A
SI-2 Del R578
+1.5V_USB_ICH
C813
.1U/10V_4
C423
.1U/10V_4
SI-2 Del R586
+3V_VCCPAUX
C814
.1U/10V_4
11mA
+1.05V_LAN_ICH
C401
.1U/10V_4
19mA
23mA
L58
1uH/300mA_8
+1.5V_ICH_GLANPLL
C769
10U/6.3V_8
C771
2.2U/6.3V_6
80mA
+1.5V_PCIE_ICH
C357
4.7U/6.3V_6
1mA
+3V_GLAN_ICH
SI-2 Del R523
VCCRTC
V5REF
V5REF_SUS
VCC1_5_B[01] … VCC1_5_B[49]
VCCSATAPLL
VCC1_5_A[01] … VCC1_5_A[30]
VCCUSBPLL
VCCLAN1_05[1]
VCCLAN1_05[2]
VCCLAN3_3[1]
VCCLAN3_3[2]
VCCGLANPLL
VCCGLAN1_5[1] … VCCGLAN1_5[4]
VCCGLAN3_3
VCC1_05[01] … VCC1_05[26]
VCCDMIPLL
VCC_DMI[1]
VCC_DMI[2]
V_CPU_IO[1]
V_CPU_IO[2]
VCC3_3[01] … VCC3_3[14]
VCCHDA
VCCSUSHDA
VCCSUS1_05[1]
VCCSUS1_05[2]
VCCSUS1_5[1]
VCCSUS1_5[2]
VCCSUS3_3[01] … VCCSUS3_3[20]
VCCCL1_05
VCCCL1_5
VCCCL3_3[1]
VCCCL3_3[2]
CORE
VCCA3GP
VCCP_CORE
PCI
ARX
VCCPSUS
USB CORE
GLAN POWER
+1.05V
1.634A
C392
.1U/10V_4
C394
.1U/10V_4
+1.5V
23mA
+1.5V_ICH_VCCDMIPLL
L26
1uH/300mA_8
C308
.01U/16V_4
C327
10U/6.3V_8
+1.05V
48mA
+1.05V_ICH_DMI
L28
HCB1608KF-181T15_6
C367
4.7U/6.3V_6
+1.05V
R207
*0_6/S
short-1a
7/16 (PV2) Change FP for ICT.
C356
.1U/10V_4
C351
.1U/10V_4
C334
4.7U/6.3V_6
2mA
+1.05V_CPU_IO
+3V
+3V_DMI_ICH
+3V_SATA_ICH
+3V_VCCPCORE_ICH
C336
.1U/10V_4
C811
.1U/10V_4
C770
.1U/10V_4
VCC3_3
308mA
+3V_PCI_ICH
C457
.1U/10V_4
C412
.1U/10V_4
C407
.1U/10V_4
SI-2 Del R520,R575,R193,R290
UMA
R585
*0_6
+1.5V
+1.5V_VCCHDA
11mA
R584
*0_6/S
dis
short-1a
+3V
+VCCSUSHDA
11mA
R271
*0_6
UMA
+1.5VS5
C815
.1U/10V_4
TP_VCCSUS1_05_ICH_1
TP60
SI-2 4/10 For TP.
TP_VCCSUS1_5_ICH_1
TP58
dis
short-1a
R287
*0_6/S
+3VS5
C464
.1U/10V_4
07/14 (PV2) Change footprint for PE require.
+1.5VSUS_INT_ICH
C381
.1U/10V_4
Check rating
+3VS5
+3VS5_SB_1
C386
.1U/10V_4
C387
.1U/10V_4
VCCSUS 3_3 212mA
+3VS5_SB_2
C414
.022U/16V_4
C454
.022U/16V_4
C420
.1U/10V_4
SI-2 Del R222,R596
http://hobi-elektronika.net/
+1.05V_CL_INT_ICH
+1.5V_CL_INT_ICH
05/23 (PV) Del for PE require.
+3V_CL_ICH
19mA
+3V
C364
1U/6.3V_4
C363
.1U/10V_4
C365
.1U/10V_4
Install for UMA model
+3VS5
+1.5VS5
U15
VIN
VOUT
SHDN
GND
SET
C479
*1U/6.3V_4
R1
R295
*22.1K/F_4
C459
*4.7U/6.3V_6
R2
R296
*100K/F_4
*IC(5P) G913C (SOT23-5)EP
Vout=1.25(1+R1/R2)
VSS[001] … VSS[198]
VSS_NCTF[01] … VSS_NCTF[12]
PROJECT : UT7
Quanta Computer Inc.
NB5
Size
Custom
Document Number
ICH9-M Power 4/4
Rev
E3A
Date: Friday, July 18, 2008
Sheet 24 of 46
]

Delete JMB 385

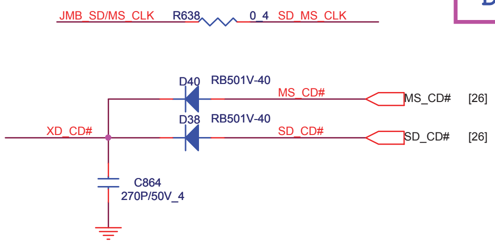
JMB_SD/MS_CLK
R638
0_4
SD_MS_CLK
D40
RB501V-40
MS_CD#
MS_CD#
[26]
D38
RB501V-40
XD_CD#
SD_CD#
SD_CD#
[26]
C864
270P/50V_4

Close to CN34

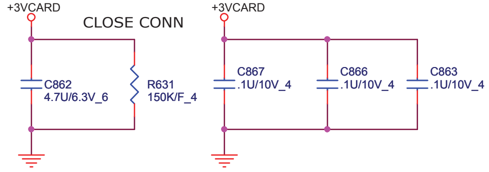
+3VCARD
CLOSE CONN
C862
4.7U/6.3V_6
R631
150K/F_4
+3VCARD
C867
.1U/10V_4
C866
.1U/10V_4
C863
.1U/10V_4

	SD/MMC	MS	XD
MDID0	SD_DAT0	MS_D0	XD_D0
MDID1	SD_DAT1	MS_D1	XD_D1
MDID2	SD_DAT2	MS_D2	XD_D2
MDID3	SD_DAT3	MS_D3	XD_D3
MDID4	SD_CMD	MS_BS	XD_WE#
MDID5	SD_CLK	MS_SCLK	XD_CE#
MDID6	SD_WP		XD_WP#
MDID7			XD_CLE
MDID8	SD_DAT4		XD_D4
MDID9	SD_DAT5		XD_D5
MDID10	SD_DAT6		XD_D6
MDID11	SD_DAT7		XD_D7
MDID12			XD_RE#
MDID13			XD_R/B#
MDID14			XD_ALE
CR1_LEDN	SD1_LED#	MS1_LED#	XD_LED#
CR1_PCTLN	SD1_PCTL#	MS1_PCTL#	XD1_PCTL#
CR1_CD0	SD1_CD#		XD_CV#
CR1_CD1		MS1_CD#	XD_CD#

5 IN1 CARD READER

XD,MMC/SD,MS/MSP

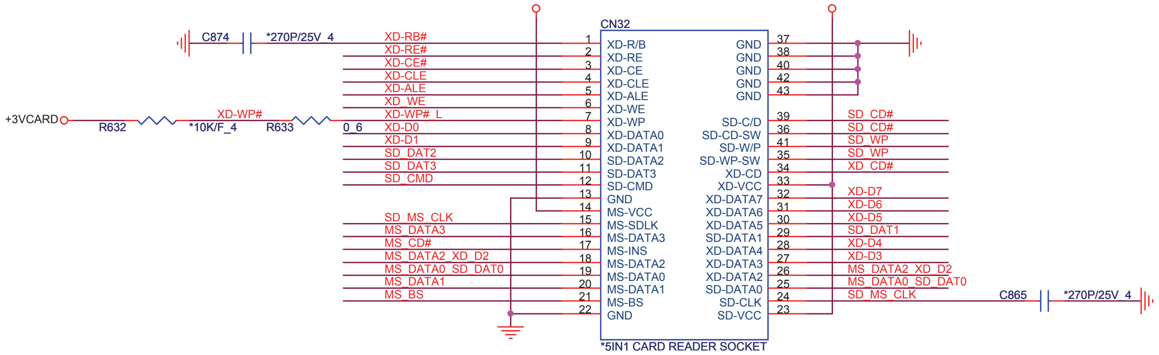
+3VCARD
+3VCARD
CN32
C874
*270P/25V_4
+3VCARD
R632
*10K/F_4
R633
0_6
XD-RB#
XD-RE#
XD-CE#
XD-CLE
XD-ALE
XD_WE
XD-WP#
XD-WP#_L
XD-D0
XD-D1
SD_DAT2
SD_DAT3
SD_CMD
SD_MS_CLK
MS_DATA3
MS_CD#
MS_DATA2_XD_D2
MS_DATA0_SD_DAT0
MS_DATA1
MS_BS
1 XD-R/B
2 XD-RE
3 XD-CE
4 XD-CLE
5 XD-ALE
6 XD-WE
7 XD-WP
8 XD-DATA0
9 XD-DATA1
10 SD-DATA2
11 SD-DAT3
12 SD-CMD
13 GND
14 MS-VCC
15 MS-SDLK
16 MS-DATA3
17 MS-INS
18 MS-DATA2
19 MS-DATA0
20 MS-DATA1
21 MS-BS
22 GND
GND 37
GND 38
GND 40
GND 42
GND 43
SD-C/D 39
SD-CD-SW 36
SD-W/P 41
SD-WP-SW 35
XD-CD 34
XD-VCC 33
XD-DATA7 32
XD-DATA6 31
XD-DATA5 30
SD-DATA1 29
XD-DATA4 28
XD-DATA3 27
XD-DATA2 26
SD-DATA0 25
SD-CLK 24
SD-VCC 23
SD_CD#
SD_CD#
SD_WP
SD_WP
XD_CD#
XD-D7
XD-D6
XD-D5
SD_DAT1
XD-D4
XD-D3
MS_DATA2_XD_D2
MS_DATA0_SD_DAT0
SD_MS_CLK
C865
*270P/25V_4
*5IN1 CARD READER SOCKET

SI modified Footprint: "4in1-72700327123-43p-1"

7/16 (PV2) Delete net for ICT.

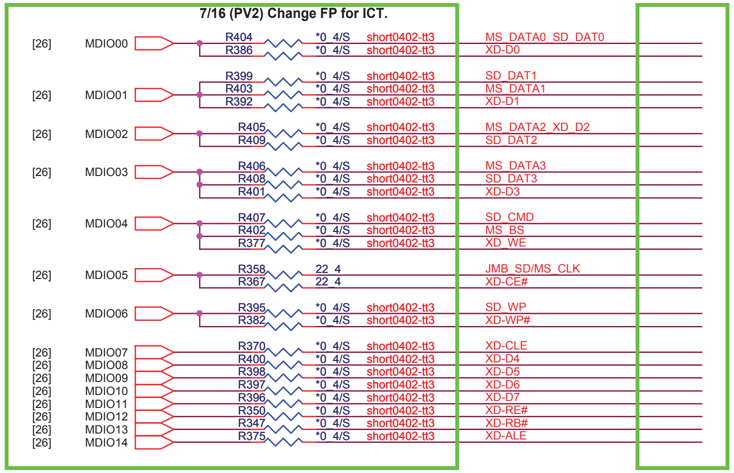
7/16 (PV2) Change FP for ICT.
[26] MDIO00
R404 *0_4/S short0402-tt3 MS_DATA0_SD_DAT0
R386 *0_4/S short0402-tt3 XD-D0
[26] MDIO01
R399 *0_4/S short0402-tt3 SD_DAT1
R403 *0_4/S short0402-tt3 MS_DATA1
R392 *0_4/S short0402-tt3 XD-D1
[26] MDIO02
R405 *0_4/S short0402-tt3 MS_DATA2_XD_D2
R409 *0_4/S short0402-tt3 SD_DAT2
[26] MDIO03
R406 *0_4/S short0402-tt3 MS_DATA3
R408 *0_4/S short0402-tt3 SD_DAT3
R401 *0_4/S short0402-tt3 XD-D3
[26] MDIO04
R407 *0_4/S short0402-tt3 SD_CMD
R402 *0_4/S short0402-tt3 MS_BS
R377 *0_4/S short0402-tt3 XD_WE
[26] MDIO05
R358 22_4 JMB_SD/MS_CLK
R367 22_4 XD-CE#
[26] MDIO06
R395 *0_4/S short0402-tt3 SD_WP
R382 *0_4/S short0402-tt3 XD-WP#
[26] MDIO07
R370 *0_4/S short0402-tt3 XD-CLE
[26] MDIO08
R400 *0_4/S short0402-tt3 XD-D4
[26] MDIO09
R398 *0_4/S short0402-tt3 XD-D5
[26] MDIO10
R397 *0_4/S short0402-tt3 XD-D6
[26] MDIO11
R396 *0_4/S short0402-tt3 XD-D7
[26] MDIO12
R350 *0_4/S short0402-tt3 XD-RE#
[26] MDIO13
R347 *0_4/S short0402-tt3 XD-RB#
[26] MDIO14
R375 *0_4/S short0402-tt3 XD-ALE

2ND SOURCE

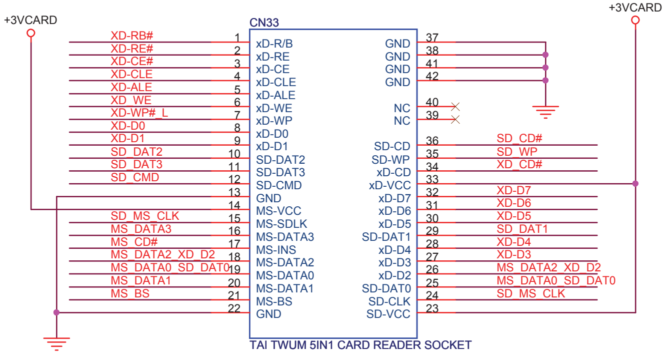
+3VCARD
+3VCARD
CN33
XD-RB#
XD-RE#
XD-CE#
XD-CLE
XD-ALE
XD_WE
XD-WP#_L
XD-D0
XD-D1
SD_DAT2
SD_DAT3
SD_CMD
SD_MS_CLK
MS_DATA3
MS_CD#
MS_DATA2_XD_D2
MS_DATA0_SD_DAT0
MS_DATA1
MS_BS
1 xD-R/B
2 xD-RE
3 xD-CE
4 xD-CLE
5 xD-ALE
6 xD-WE
7 xD-WP
8 xD-D0
9 xD-D1
10 SD-DAT2
11 SD-DAT3
12 SD-CMD
13 GND
14 MS-VCC
15 MS-SDLK
16 MS-DATA3
17 MS-INS
18 MS-DATA2
19 MS-DATA0
20 MS-DATA1
21 MS-BS
22 GND
GND 37
GND 38
GND 41
GND 42
NC 40
NC 39
SD-CD 36
SD-WP 35
xD-CD 34
xD-VCC 33
xD-D7 32
xD-D6 31
xD-D5 30
SD-DAT1 29
xD-D4 28
xD-D3 27
xD-D2 26
SD-DAT0 25
SD-CLK 24
SD-VCC 23
SD_CD#
SD_WP
XD_CD#
XD-D7
XD-D6
XD-D5
SD_DAT1
XD-D4
XD-D3
MS_DATA2_XD_D2
MS_DATA0_SD_DAT0
SD_MS_CLK
TAI TWUM 5IN1 CARD READER SOCKET

SI modified Footprint: "7IN1-R015-B11-LM-42P-L"

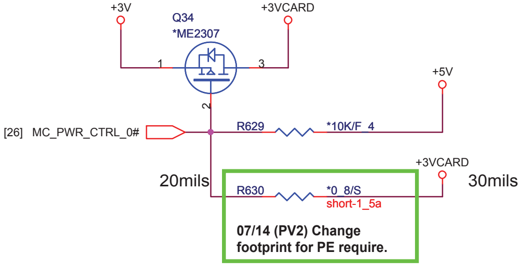
+3V
Q34
*ME2307
+3VCARD
1
3
2
+5V
[26] MC_PWR_CTRL_0#
R629
*10K/F_4
+3VCARD
20mils
30mils
R630
*0_8/S
short-1_5a

07/14 (PV2) Change footprint for PE require.

PROJECT : UT7
Quanta Computer Inc.

NB5

Size	Document Number	Rev
Custom	CardReader SOCKET	E3A

Date: Friday, July 18, 2008 Sheet 25 of 46

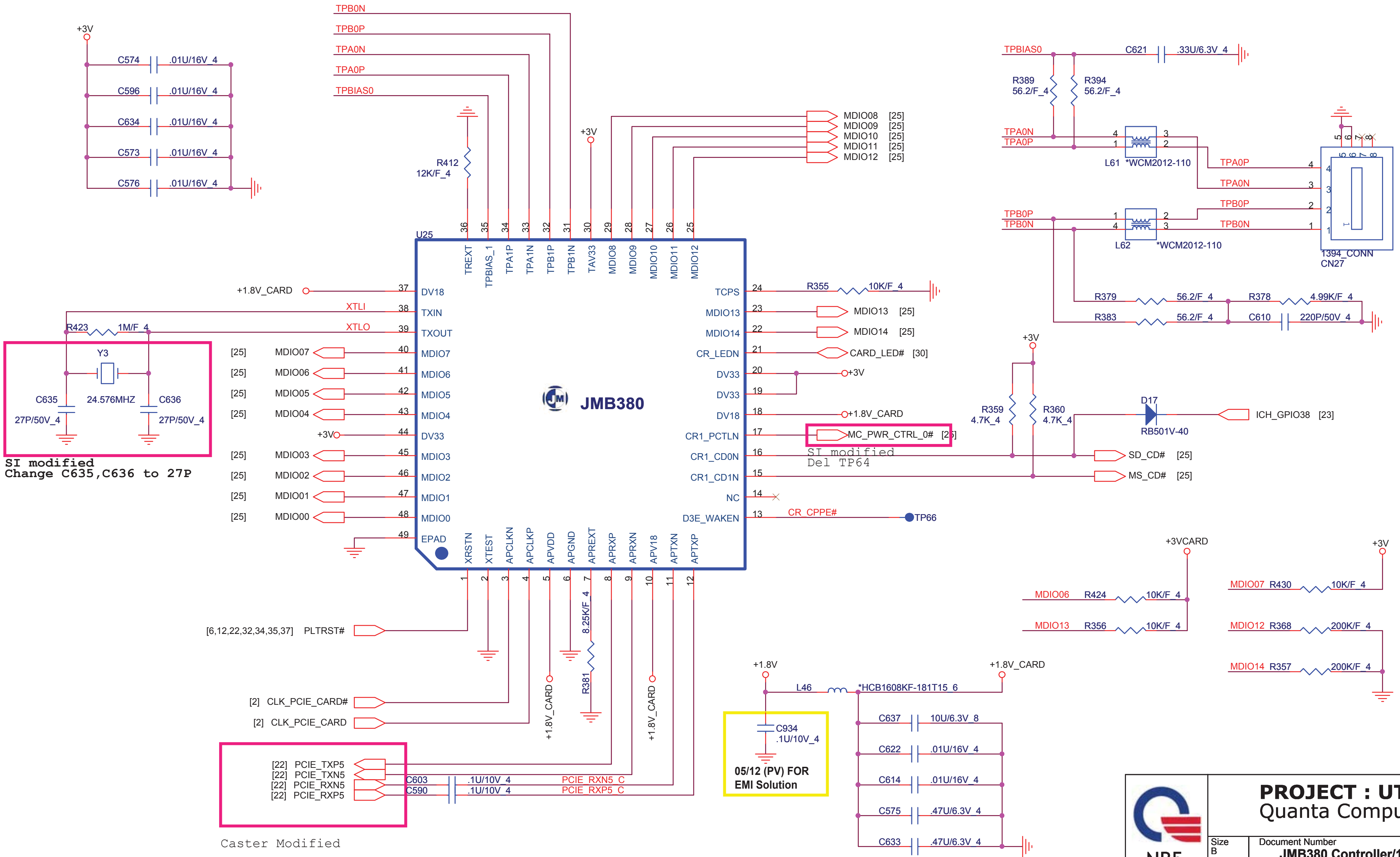
U25
JMB380
+3V
C574 .01U/16V_4
C596 .01U/16V_4
C634 .01U/16V_4
C573 .01U/16V_4
C576 .01U/16V_4
TPB0N
TPB0P
TPA0N
TPA0P
TPBIAS0
R412 12K/F_4
+3V
TREXT 36
TPBIAS_1 35
TPA1P 34
TPA1N 33
TPB1P 32
TPB1N 31
TAV33 30
MDIO8 29
MDIO9 28
MDIO10 27
MDIO11 26
MDIO12 25
MDIO08 [25]
MDIO09 [25]
MDIO10 [25]
MDIO11 [25]
MDIO12 [25]
+1.8V_CARD 37 DV18
XTLI 38 TXIN
XTLO 39 TXOUT
R423 1M/F_4
Y3 24.576MHZ
C635 27P/50V_4
C636 27P/50V_4
[25] MDIO07 40 MDIO7
[25] MDIO06 41 MDIO6
[25] MDIO05 42 MDIO5
[25] MDIO04 43 MDIO4
+3V 44 DV33
[25] MDIO03 45 MDIO3
[25] MDIO02 46 MDIO2
[25] MDIO01 47 MDIO1
[25] MDIO00 48 MDIO0
49 EPAD
TCPS 24 R355 10K/F_4
MDIO13 23 MDIO13 [25]
MDIO14 22 MDIO14 [25]
CR_LEDN 21 CARD_LED# [30]
DV33 20 +3V
DV33 19
DV18 18 +1.8V_CARD
CR1_PCTLN 17 MC_PWR_CTRL_0# [25]
CR1_CD0N 16
CR1_CD1N 15
NC 14
D3E_WAKEN 13 CR_CPPE# TP66
XRSTN 1
XTEST 2
APCLKN 3
APCLKP 4
APVDD 5
APGND 6
APREXT 7
APRXP 8
APRXN 9
APV18 10
APTXN 11
APTXP 12
[6,12,22,32,34,35,37] PLTRST#
[2] CLK_PCIE_CARD#
[2] CLK_PCIE_CARD
+1.8V_CARD
R381 8.25K/F_4
+1.8V_CARD
[22] PCIE_TXP5
[22] PCIE_TXN5
[22] PCIE_RXN5
[22] PCIE_RXP5
C603 .1U/10V_4 PCIE_RXN5_C
C590 .1U/10V_4 PCIE_RXP5_C
TPBIAS0 C621 .33U/6.3V_4
R389 56.2/F_4
R394 56.2/F_4
TPA0N
TPA0P
L61 *WCM2012-110
TPA0P
TPA0N
TPB0P
TPB0N
TPB0P
TPB0N
L62 *WCM2012-110
1394_CONN
CN27
R379 56.2/F_4
R378 4.99K/F_4
R383 56.2/F_4
C610 220P/50V_4
+3V
R359 4.7K_4
R360 4.7K_4
D17 RB501V-40
ICH_GPIO38 [23]
SD_CD# [25]
MS_CD# [25]
+3VCARD
MDIO06 R424 10K/F_4
MDIO13 R356 10K/F_4
+3V
MDIO07 R430 10K/F_4
MDIO12 R368 200K/F_4
MDIO14 R357 200K/F_4
+1.8V
L46 *HCB1608KF-181T15_6
+1.8V_CARD
C934 .1U/10V_4
C637 10U/6.3V_8
C622 .01U/16V_4
C614 .01U/16V_4
C575 .47U/6.3V_4
C633 .47U/6.3V_4

SI modified
Change C635,C636 to 27P

SI modified
Del TP64

05/12 (PV) FOR
EMI Solution

Caster Modified

PROJECT : UT7
Quanta Computer Inc.

NB5

Size	Document Number	Rev
B	JMB380 Controller/1394	E3A

Date: Friday, July 18, 2008 Sheet 26 of 46

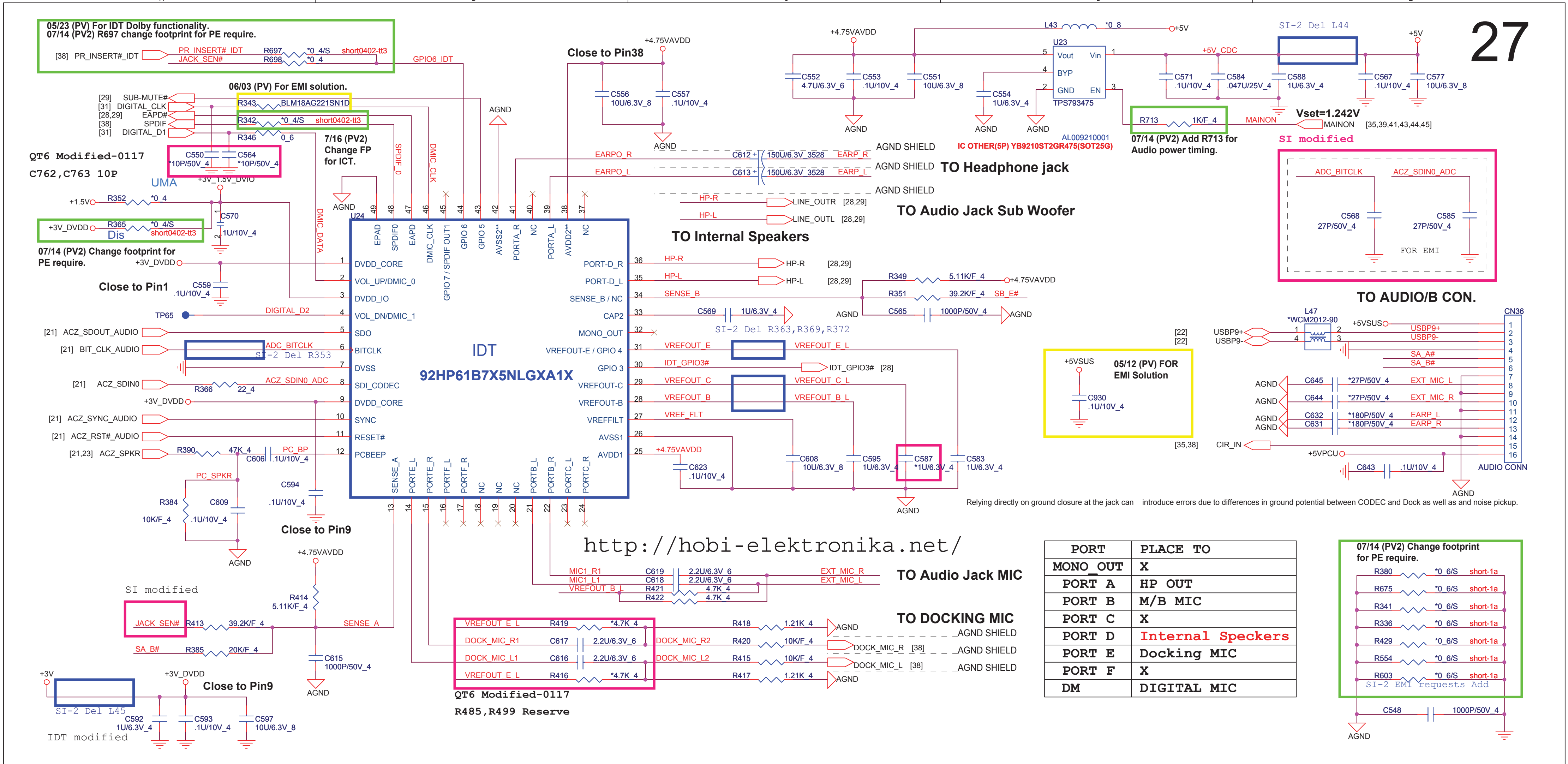
05/23 (PV) For IDT Dolby functionality.
07/14 (PV2) R697 change footprint for PE require.
[38] PR_INSERT#_IDT
PR_INSERT#_IDT R697 *0_4/S short0402-tt3
JACK_SEN# R698 *0_4
GPIO6_IDT
06/03 (PV) For EMI solution.
[29] SUB-MUTE#
[31] DIGITAL_CLK
[28,29] EAPD#
[38] SPDIF
[31] DIGITAL_D1
R343 BLM18AG221SN1D
R342 *0_4/S short0402-tt3
R346 0_6
7/16 (PV2) Change FP for ICT.
QT6 Modified-0117
C762,C763 10P
C550 *10P/50V_4
C564 *10P/50V_4
UMA
+3V_1.5V_DVIO
+1.5V R352 *0_4
+3V_DVDD R365 *0_4/S short0402-tt3
Dis
C570 .1U/10V_4
07/14 (PV2) Change footprint for PE require.
Close to Pin1
C559 .1U/10V_4
TP65
DIGITAL_D2
[21] ACZ_SDOUT_AUDIO
[21] BIT_CLK_AUDIO
ADC_BITCLK
SI-2 Del R353
[21] ACZ_SDIN0 R366 22_4 ACZ_SDIN0_ADC
[21] ACZ_SYNC_AUDIO
[21] ACZ_RST#_AUDIO
[21,23] ACZ_SPKR R390 47K_4 C606 .1U/10V_4 PC_BP
PC_SPKR
R384 10K/F_4
C609 .1U/10V_4
C594 .1U/10V_4
Close to Pin9
AGND
U24
IDT
92HP61B7X5NLGXA1X
DVDD_CORE
VOL_UP/DMIC_0
DVDD_IO
VOL_DN/DMIC_1
SDO
BITCLK
DVSS
SDI_CODEC
DVDD_CORE
SYNC
RESET#
PCBEEP
EPAD
SPDIF0
EAPD
DMIC_CLK
GPIO 7 / SPDIF OUT1
GPIO 6
GPIO 5
AVSS2**
PORTA_R
NC
PORTA_L
AVDD2**
NC
PORT-D_R
PORT-D_L
SENSE_B / NC
CAP2
MONO_OUT
VREFOUT-E / GPIO 4
GPIO 3
VREFOUT-C
VREFOUT-B
VREFFILT
AVSS1
AVDD1
SENSE_A
PORTE_L
PORTE_R
PORTF_L
PORTF_R
NC
PORTB_L
PORTB_R
PORTC_L
PORTC_R
SPDIF_0
DMIC_CLK
DMIC_DATA
Close to Pin38
+4.75VAVDD
C556 10U/6.3V_8
C557 .1U/10V_4
EARPO_R
EARPO_L
C612 150U/6.3V_3528 EARP_R
C613 150U/6.3V_3528 EARP_L
AGND SHIELD
TO Headphone jack
HP-R LINE_OUTR [28,29]
HP-L LINE_OUTL [28,29]
TO Audio Jack Sub Woofer
TO Internal Speakers
HP-R [28,29]
HP-L [28,29]
SENSE_B
R349 5.11K/F_4 +4.75VAVDD
R351 39.2K/F_4 SB_E#
C569 1U/6.3V_4
C565 1000P/50V_4
SI-2 Del R363,R369,R372
VREFOUT_E
VREFOUT_E_L
IDT_GPIO3# [28]
VREFOUT_C
VREFOUT_C_L
VREFOUT_B
VREFOUT_B_L
VREF_FLT
+4.75VAVDD
C623 .1U/10V_4
C608 10U/6.3V_8
C595 1U/6.3V_4
C587 *1U/6.3V_4
C583 1U/6.3V_4
+4.75VAVDD
C552 4.7U/6.3V_6
C553 .1U/10V_4
C551 10U/6.3V_8
C554 1U/6.3V_4
L43 *0_8 +5V
U23 TPS793475
Vout Vin BYP GND EN
AL009210001
IC OTHER(5P) YB9210ST2GR475(SOT25G)
+5V_CDC
C571 .1U/10V_4
C584 .047U/25V_4
C588 1U/6.3V_4
SI-2 Del L44
C567 .1U/10V_4
C577 10U/6.3V_8
R713 1K/F_4 MAINON
07/14 (PV2) Add R713 for Audio power timing.
Vset=1.242V
MAINON [35,39,41,43,44,45]
SI modified
ADC_BITCLK ACZ_SDIN0_ADC
C568 27P/50V_4
C585 27P/50V_4
FOR EMI
TO AUDIO/B CON.
L47 *WCM2012-90
USBP9+ USBP9-
[22]
+5VSUS
CN36
SA_A# SA_B#
C645 *27P/50V_4 EXT_MIC_L
C644 *27P/50V_4 EXT_MIC_R
C632 *180P/50V_4 EARP_L
C631 *180P/50V_4 EARP_R
[35,38] CIR_IN
+5VPCU
C643 .1U/10V_4
AUDIO CONN
05/12 (PV) FOR EMI Solution
+5VSUS C930 .1U/10V_4
Relying directly on ground closure at the jack can introduce errors due to differences in ground potential between CODEC and Dock as well as and noise pickup.
http://hobi-elektronika.net/
MIC1_R1 C619 2.2U/6.3V_6 EXT_MIC_R
MIC1_L1 C618 2.2U/6.3V_6 EXT_MIC_L
VREFOUT_B_L R421 4.7K_4
R422 4.7K_4
TO Audio Jack MIC
SI modified
JACK_SEN# R413 39.2K/F_4 SENSE_A
SA_B# R385 20K/F_4
R414 5.11K/F_4
C615 1000P/50V_4
+3V +3V_DVDD
Close to Pin9
SI-2 Del L45
C592 1U/6.3V_4
C593 .1U/10V_4
C597 10U/6.3V_8
IDT modified
VREFOUT_E_L R419 *4.7K_4
DOCK_MIC_R1 C617 2.2U/6.3V_6 DOCK_MIC_R2
DOCK_MIC_L1 C616 2.2U/6.3V_6 DOCK_MIC_L2
VREFOUT_E_L R416 *4.7K_4
QT6 Modified-0117
R485,R499 Reserve
TO DOCKING MIC
R418 1.21K_4
R420 10K/F_4 DOCK_MIC_R [38]
R415 10K/F_4 DOCK_MIC_L [38]
R417 1.21K_4
07/14 (PV2) Change footprint for PE require.
R380 *0_6/S short-1a
R675 *0_6/S short-1a
R341 *0_6/S short-1a
R336 *0_6/S short-1a
R429 *0_6/S short-1a
R554 *0_6/S short-1a
R603 *0_6/S short-1a
SI-2 EMI requests Add
C548 1000P/50V_4

PORT	PLACE TO
MONO_OUT	X
PORT A	HP OUT
PORT B	M/B MIC
PORT C	X
PORT D	Internal Speckers
PORT E	Docking MIC
PORT F	X
DM	DIGITAL MIC

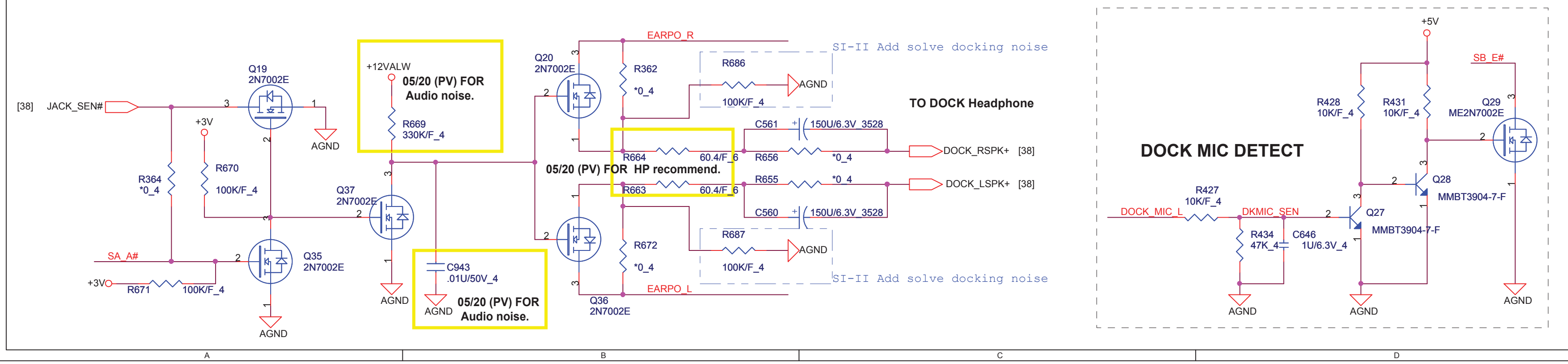
[38] JACK_SEN#
Q19 2N7002E
+3V
R364 *0_4
R670 100K/F_4
SA_A#
+3V R671 100K/F_4
Q35 2N7002E
Q37 2N7002E
+12VALW
05/20 (PV) FOR Audio noise.
R669 330K/F_4
C943 .01U/50V_4
05/20 (PV) FOR Audio noise.
Q20 2N7002E
Q36 2N7002E
EARPO_R
EARPO_L
R362 *0_4
R672 *0_4
R686 100K/F_4
R687 100K/F_4
SI-II Add solve docking noise
TO DOCK Headphone
C561 150U/6.3V_3528
C560 150U/6.3V_3528
R664 60.4/F_6
R663 60.4/F_6
05/20 (PV) FOR HP recommend.
R656 *0_4 DOCK_RSPK+ [38]
R655 *0_4 DOCK_LSPK+ [38]
DOCK MIC DETECT
+5V
SB_E#
R428 10K/F_4
R431 10K/F_4
Q29 ME2N7002E
Q28 MMBT3904-7-F
Q27 MMBT3904-7-F
R427 10K/F_4
DOCK_MIC_L
DKMIC_SEN
R434 47K_4
C646 1U/6.3V_4
AGND

SA_A# -->EXT HP

SA_B# -->EXT MIC

SB_E#--> DOCK MIC

Audio JACK: Normal Open

NB5

PROJECT : UT7
Quanta Computer Inc.

Size	Document Number	Rev
Custom	Azalia IDT92HD71B7	E3A
Date: Friday, July 18, 2008	Sheet 27 of 46	

AUDIO AMPLIFIER

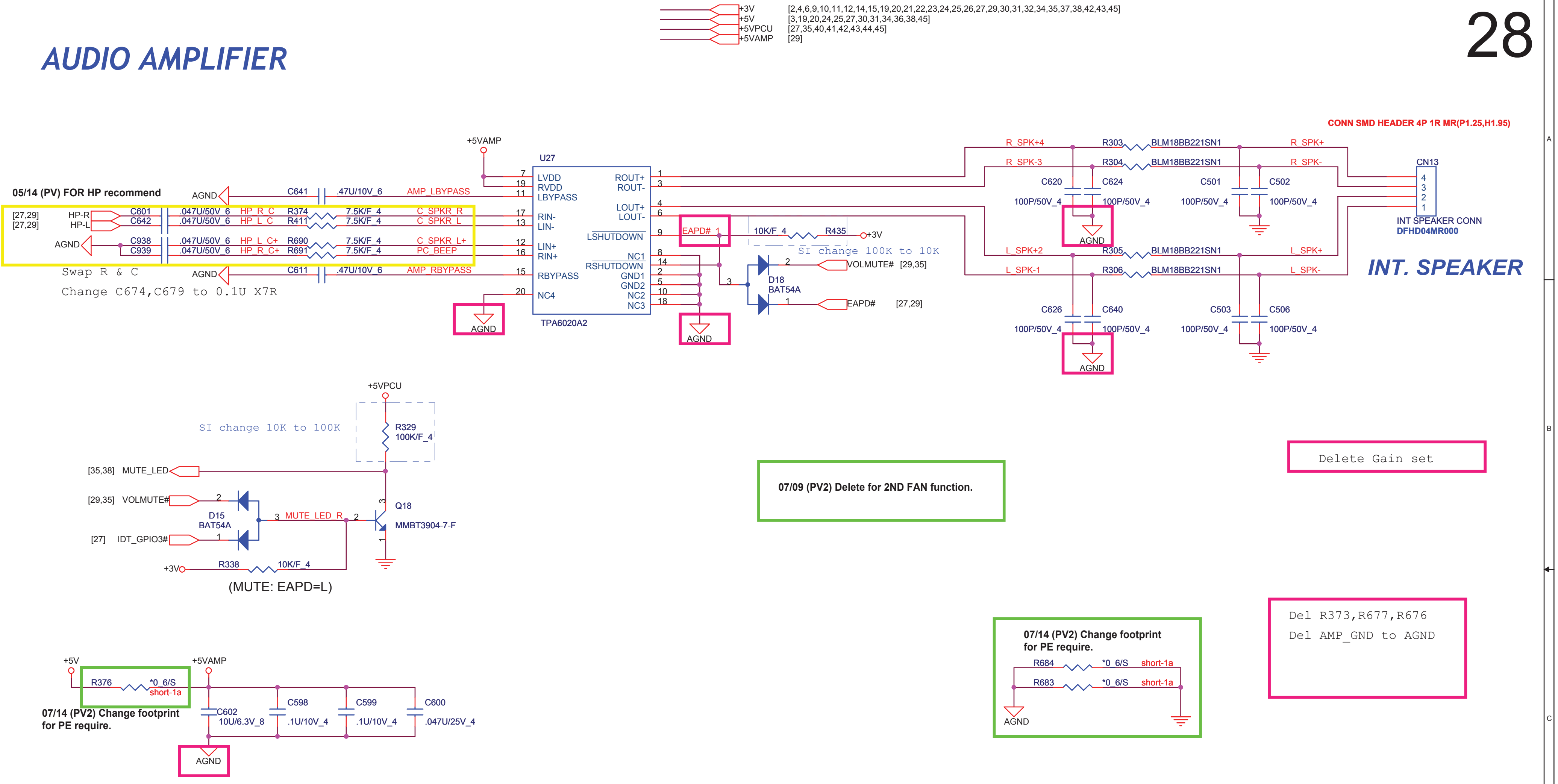
+3V [2,4,6,9,10,11,12,14,15,19,20,21,22,23,24,25,26,27,29,30,31,32,34,35,37,38,42,43,45]
+5V [3,19,20,24,25,27,30,31,34,36,38,45]
+5VPCU [27,35,40,41,42,43,44,45]
+5VAMP [29]
05/14 (PV) FOR HP recommend
[27,29] HP-R
[27,29] HP-L
C601 .047U/50V_6 HP_R_C R374 7.5K/F_4 C_SPKR_R
C642 .047U/50V_6 HP_L_C R411 7.5K/F_4 C_SPKR_L
C938 .047U/50V_6 HP_L_C+ R690 7.5K/F_4 C_SPKR_L+
C939 .047U/50V_6 HP_R_C+ R691 7.5K/F_4 PC_BEEP
C641 .47U/10V_6 AMP_LBYPASS
C611 .47U/10V_6 AMP_RBYPASS
AGND
Swap R & C
Change C674,C679 to 0.1U X7R
+5VAMP
U27
LVDD RVDD LBYPASS
RIN- LIN- LIN+ RIN+
RBYPASS NC4
ROUT+ ROUT- LOUT+ LOUT-
LSHUTDOWN RSHUTDOWN
NC1 GND1 GND2 NC2 NC3
TPA6020A2
EAPD# 10K/F_4 R435 +3V
SI change 100K to 10K
D18 BAT54A
VOLMUTE# [29,35]
EAPD# [27,29]
CONN SMD HEADER 4P 1R MR(P1.25,H1.95)
R_SPK+4 R303 BLM18BB221SN1 R_SPK+
R_SPK-3 R304 BLM18BB221SN1 R_SPK-
C620 C624 C501 C502 100P/50V_4
L_SPK+2 R305 BLM18BB221SN1 L_SPK+
L_SPK-1 R306 BLM18BB221SN1 L_SPK-
C626 C640 C503 C506 100P/50V_4
CN13
INT SPEAKER CONN
DFHD04MR000
INT. SPEAKER
+5VPCU
SI change 10K to 100K
R329 100K/F_4
[35,38] MUTE_LED
[29,35] VOLMUTE#
[27] IDT_GPIO3#
D15 BAT54A
MUTE_LED_R
Q18 MMBT3904-7-F
+3V R338 10K/F_4
(MUTE: EAPD=L)
07/09 (PV2) Delete for 2ND FAN function.
Delete Gain set
+5V R376 *0_6/S short-1a
+5VAMP
07/14 (PV2) Change footprint for PE require.
C602 10U/6.3V_8
C598 .1U/10V_4
C599 .1U/10V_4
C600 .047U/25V_4
07/14 (PV2) Change footprint for PE require.
R684 *0_6/S short-1a
R683 *0_6/S short-1a
Del R373,R677,R676
Del AMP_GND to AGND

Accelerometer Sensor

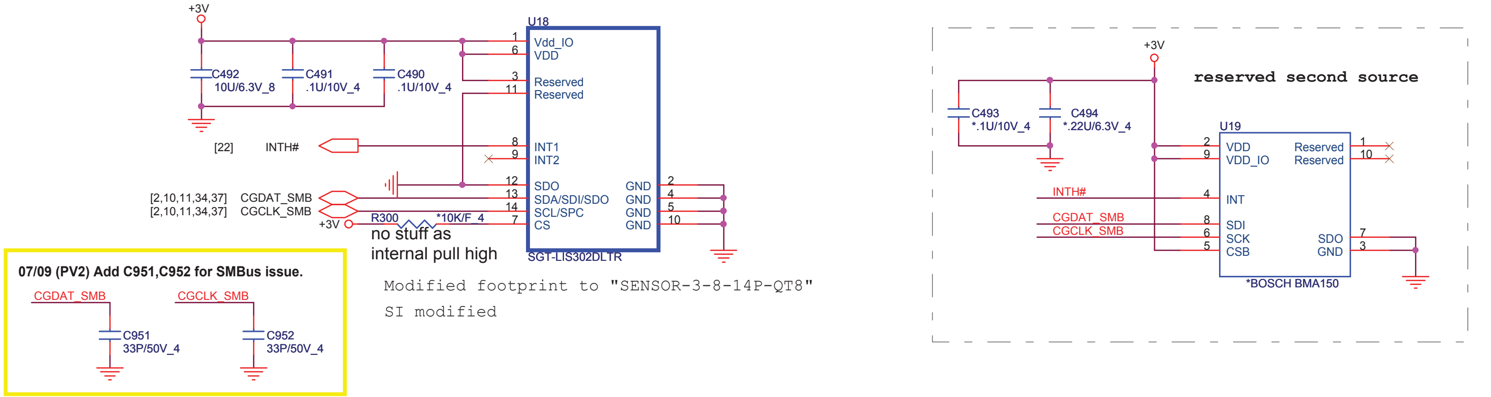
+3V
C492 10U/6.3V_8
C491 .1U/10V_4
C490 .1U/10V_4
U18
Vdd_IO VDD Reserved Reserved INT1 INT2 SDO SDA/SDI/SDO SCL/SPC CS GND
SGT-LIS302DLTR
[22] INTH#
[2,10,11,34,37] CGDAT_SMB
[2,10,11,34,37] CGCLK_SMB
+3V R300 *10K/F_4
no stuff as internal pull high
Modified footprint to "SENSOR-3-8-14P-QT8"
SI modified
07/09 (PV2) Add C951,C952 for SMBus issue.
CGDAT_SMB C951 33P/50V_4
CGCLK_SMB C952 33P/50V_4
reserved second source
+3V
C493 *.1U/10V_4
C494 *.22U/6.3V_4
U19
VDD VDD_IO INT SDI SCK CSB Reserved Reserved SDO GND
INTH# CGDAT_SMB CGCLK_SMB
*BOSCH BMA150

PROJECT : UT7
Quanta Computer Inc.

NB5

Size	Document Number	Rev
Custom	AMP_TPA6017/Accelerometer	E3A

Date: Friday, July 18, 2008 Sheet 28 of 46

EQ FOR SUBWOOFER

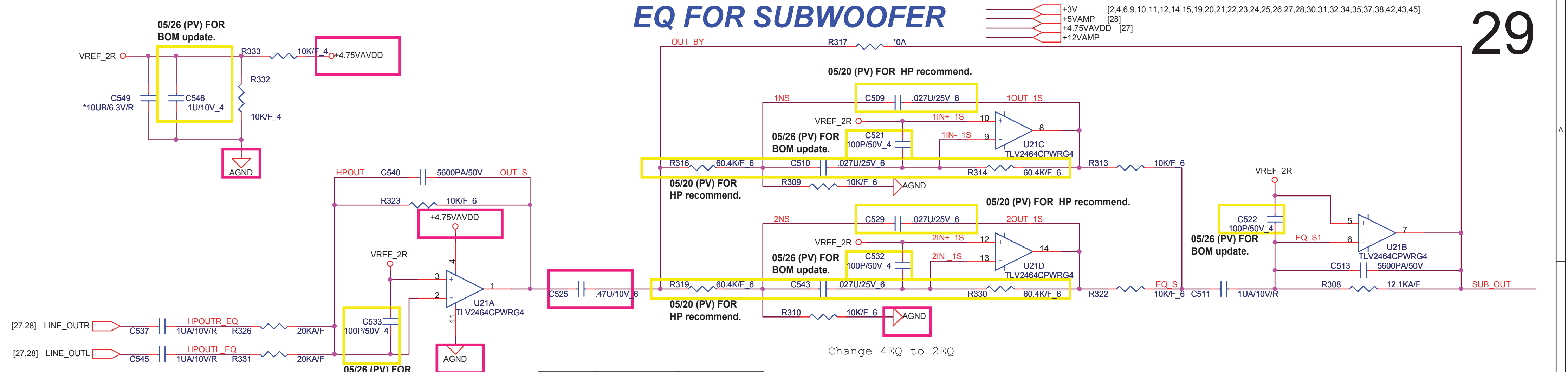
+3V [2,4,6,9,10,11,12,14,15,19,20,21,22,23,24,25,26,27,28,30,31,32,34,35,37,38,42,43,45]
+5VAMP [28]
+4.75VAVDD [27]
+12VAMP
05/26 (PV) FOR BOM update.
VREF_2R
R333
10K/F_4
+4.75VAVDD
R332
10K/F_4
C549
*10UB/6.3V/R
C546
.1U/10V_4
AGND
OUT_BY
R317
*0A
05/20 (PV) FOR HP recommend.
1NS
C509
.027U/25V_6
1OUT_1S
VREF_2R
1IN+_1S
1IN-_1S
05/26 (PV) FOR BOM update.
C521
100P/50V_4
U21C
TLV2464CPWRG4
R316
60.4K/F_6
C510
.027U/25V_6
R314
60.4K/F_6
R313
10K/F_6
R309
10K/F_6
AGND
05/20 (PV) FOR HP recommend.
HPOUT
C540
5600PA/50V
OUT_S
R323
10K/F_6
+4.75VAVDD
VREF_2R
U21A
TLV2464CPWRG4
C525
.47U/10V_6
2NS
C529
.027U/25V_6
2OUT_1S
2IN+_1S
2IN-_1S
05/26 (PV) FOR BOM update.
C532
100P/50V_4
U21D
TLV2464CPWRG4
R319
60.4K/F_6
C543
.027U/25V_6
R330
60.4K/F_6
R322
10K/F_6
R310
10K/F_6
AGND
05/20 (PV) FOR HP recommend.
VREF_2R
C522
100P/50V_4
05/26 (PV) FOR BOM update.
EQ_S1
U21B
TLV2464CPWRG4
C513
5600PA/50V
EQ_S
C511
1UA/10V/R
R308
12.1KA/F
SUB_OUT
[27,28] LINE_OUTR
C537
1UA/10V/R
HPOUTR_EQ
R326
20KA/F
C533
100P/50V_4
[27,28] LINE_OUTL
C545
1UA/10V/R
HPOUTL_EQ
R331
20KA/F
AGND
Change 4EQ to 2EQ

05/26 (PV) FOR BOM update.

MODEL	UT6	UT7
R316	60.4K/F_6	40.2K/F_6
R319	60.4K/F_6	40.2K/F_6
R330	60.4K/F_6	80.6K/F_6
R314	60.4K/F_6	80.6K/F_6
C509	0.027U/25V_6	0.022U/50V_6
C510	0.027U/25V_6	0.022U/50V_6
C529	0.027U/25V_6	0.039U/16V_6
C543	0.027U/25V_6	0.039U/16V_6

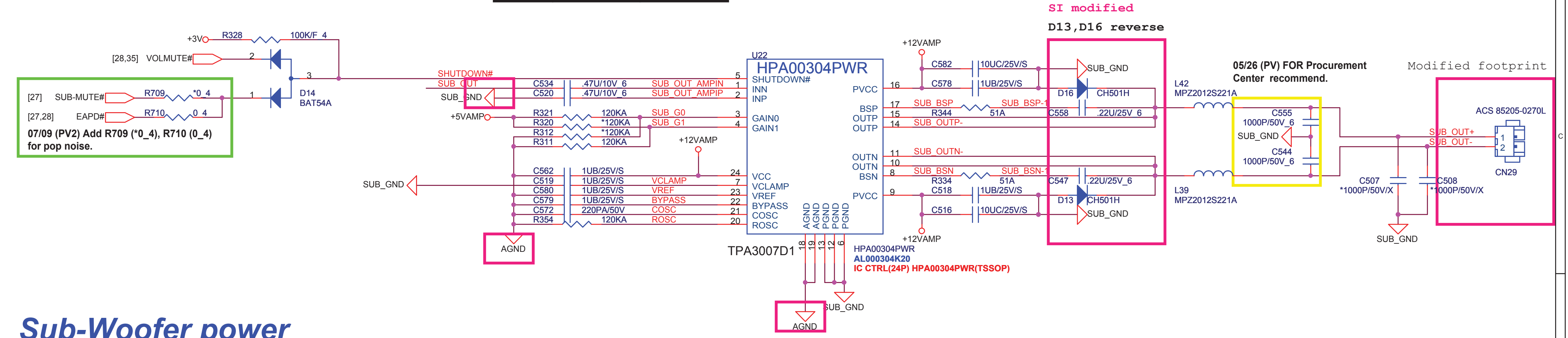
SI modified
D13,D16 reverse
+3V
R328
100K/F_4
[28,35] VOLMUTE#
D14
BAT54A
[27] SUB-MUTE#
R709
*0_4
[27,28] EAPD#
R710
0_4
07/09 (PV2) Add R709 (*0_4), R710 (0_4) for pop noise.
SHUTDOWN#
SUB_OUT
SUB_GND
+5VAMP
C534
.47U/10V_6
SUB_OUT_AMPIN
C520
.47U/10V_6
SUB_OUT_AMPIP
R321
120KA
SUB_G0
R320
*120KA
SUB_G1
R312
*120KA
R311
120KA
+12VAMP
SUB_GND
C562
1UB/25V/S
C519
1UB/25V/S
VCLAMP
C580
1UB/25V/S
VREF
C579
1UB/25V/S
BYPASS
C572
220PA/50V
COSC
R354
120KA
ROSC
AGND
U22
HPA00304PWR
SHUTDOWN#
INN
INP
GAIN0
GAIN1
VCC
VCLAMP
VREF
BYPASS
COSC
ROSC
PVCC
BSP
OUTP
OUTP
OUTN
OUTN
BSN
PVCC
AGND
AGND
PGND
PGND
PGND
TPA3007D1
HPA00304PWR
AL000304K20
IC CTRL(24P) HPA00304PWR(TSSOP)
AGND
SUB_GND
+12VAMP
C582
10UC/25V/S
C578
1UB/25V/S
SUB_BSP
SUB_BSP-
R344
51A
SUB_OUTP-
SUB_OUTN-
SUB_BSN
SUB_BSN-
R334
51A
C518
1UB/25V/S
C516
10UC/25V/S
+12VAMP
SUB_GND
D16
CH501H
C558
.22U/25V_6
C547
.22U/25V_6
D13
CH501H
SUB_GND
L42
MPZ2012S221A
L39
MPZ2012S221A
05/26 (PV) FOR Procurement Center recommend.
C555
1000P/50V_6
SUB_GND
C544
1000P/50V_6
C507
*1000P/50V/X
C508
*1000P/50V/X
SUB_GND
Modified footprint
ACS 85205-0270L
SUB_OUT+
SUB_OUT-
CN29

Sub-Woofer power

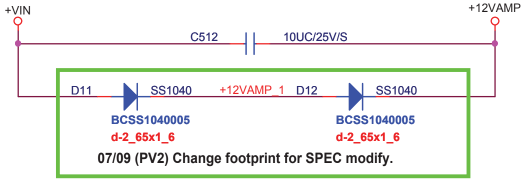
+VIN
+12VAMP
C512
10UC/25V/S
D11
SS1040
+12VAMP_1
D12
SS1040
BCSS1040005
d-2_65x1_6
BCSS1040005
d-2_65x1_6

07/09 (PV2) Change footprint for SPEC modify.

Del HP_GND to GND

Del R307,R315

Delete L1003

05/14 (PV) FOR EMI solution

07/14 (PV2) Change footprint for PE require.

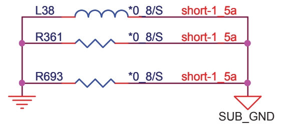
L38
*0_8/S
short-1_5a
R361
*0_8/S
short-1_5a
R693
*0_8/S
short-1_5a
SUB_GND

NB5

PROJECT : UT7

Quanta Computer Inc.

Size	Document Number	Rev
Custom	SUBWOOFER(EQ & AMP.)	E3A

Date: Friday, July 18, 2008 Sheet 29 of 46

SATA_2 CONNECTOR

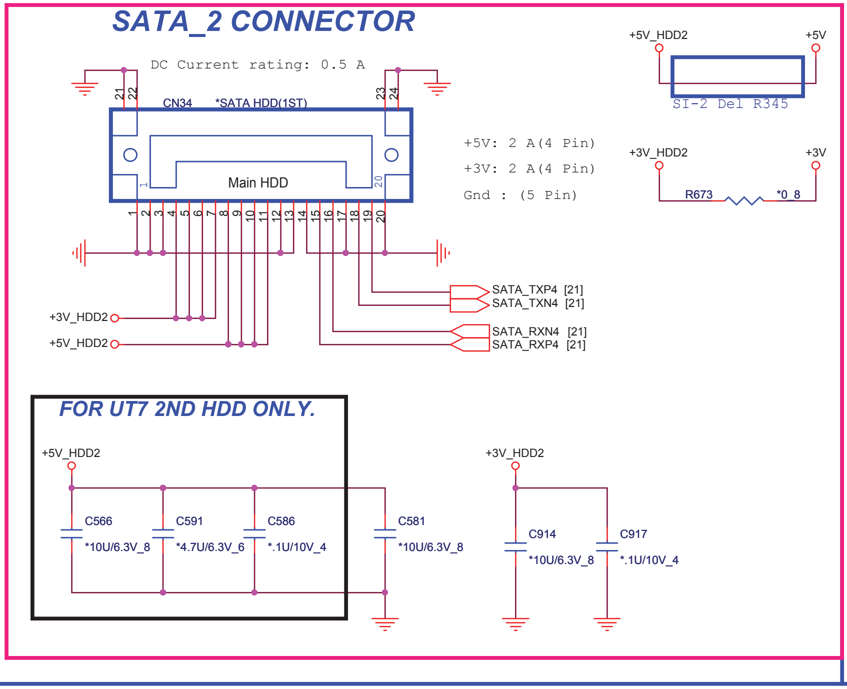
DC Current rating: 0.5 A
CN34 *SATA HDD(1ST)
Main HDD
+5V: 2 A(4 Pin)
+3V: 2 A(4 Pin)
Gnd : (5 Pin)
+5V_HDD2
+5V
SI-2 Del R345
+3V_HDD2
+3V
R673
*0_8
SATA_TXP4 [21]
SATA_TXN4 [21]
SATA_RXN4 [21]
SATA_RXP4 [21]
+3V_HDD2
+5V_HDD2
FOR UT7 2ND HDD ONLY.
C566 *10U/6.3V_8
C591 *4.7U/6.3V_6
C586 *.1U/10V_4
C581 *10U/6.3V_8
C914 *10U/6.3V_8
C917 *.1U/10V_4

M/B Screw Hole

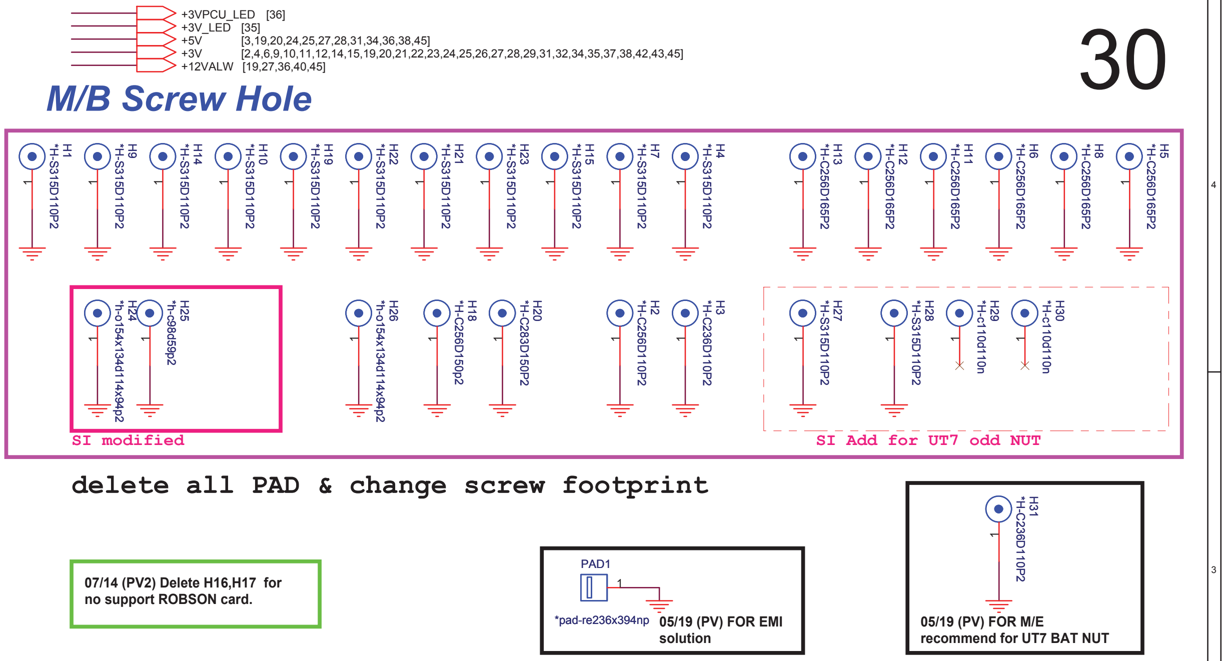
+3VPCU_LED [36]
+3V_LED [35]
+5V [3,19,20,24,25,27,28,31,34,36,38,45]
+3V [2,4,6,9,10,11,12,14,15,19,20,21,22,23,24,25,26,27,28,29,31,32,34,35,37,38,42,43,45]
+12VALW [19,27,36,40,45]
H1 *H-S315D110P2
H9 *H-S315D110P2
H14 *H-S315D110P2
H10 *H-S315D110P2
H19 *H-S315D110P2
H22 *H-S315D110P2
H21 *H-S315D110P2
H23 *H-S315D110P2
H15 *H-S315D110P2
H7 *H-S315D110P2
H4 *H-S315D110P2
H13 *H-C256D165P2
H12 *H-C256D165P2
H11 *H-C256D165P2
H6 *H-C256D165P2
H8 *H-C256D165P2
H5 *H-C256D165P2
H24 *h-o154x134d114x94p2
H25 *h-c98d59p2
SI modified
H26 *h-o154x134d114x94p2
H18 *H-C256D150p2
H20 *H-C283D150P2
H2 *H-C256D110P2
H3 *H-C236D110P2
H27 *H-S315D110P2
H28 *H-S315D110P2
H29 *h-c110d110n
H30 *h-c110d110n
SI Add for UT7 odd NUT
delete all PAD & change screw footprint
07/14 (PV2) Delete H16,H17 for no support ROBSON card.
PAD1
*pad-re236x394np
05/19 (PV) FOR EMI solution
H31 *H-C236D110P2
05/19 (PV) FOR M/E recommend for UT7 BAT NUT

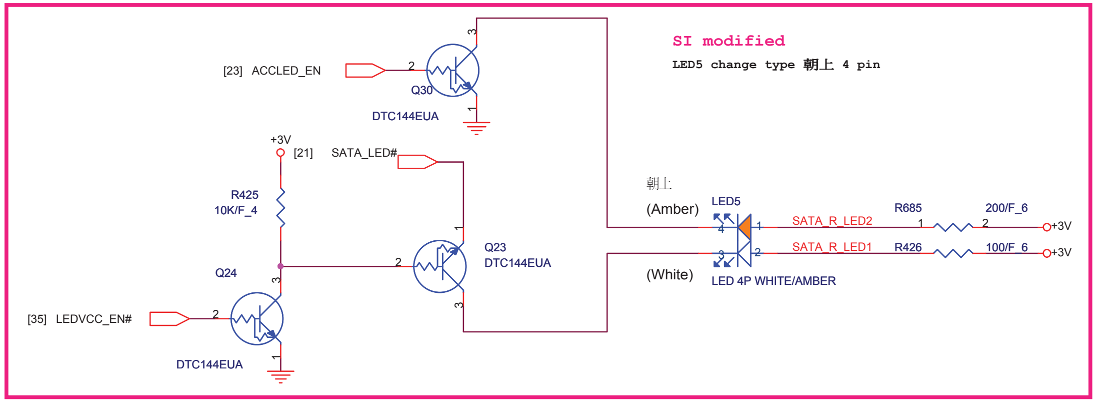
[23] ACCLED_EN
Q30
DTC144EUA
SI modified
LED5 change type 朝上 4 pin
+3V
[21] SATA_LED#
R425 10K/F_4
Q24
[35] LEDVCC_EN#
DTC144EUA
Q23 DTC144EUA
朝上
(Amber)
(White)
LED5
SATA_R_LED2
SATA_R_LED1
R685 200/F_6
R426 100/F_6
+3V
+3V
LED 4P WHITE/AMBER

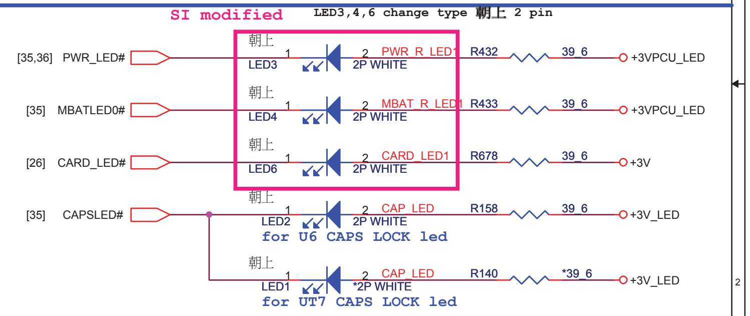
SI modified
LED3,4,6 change type 朝上 2 pin
[35,36] PWR_LED#
LED3
PWR_R_LED1
2P WHITE
R432 39_6
+3VPCU_LED
[35] MBATLED0#
LED4
MBAT_R_LED1
R433 39_6
+3VPCU_LED
[26] CARD_LED#
LED6
CARD_LED1
R678 39_6
+3V
[35] CAPSLED#
LED2
CAP_LED
R158 39_6
+3V_LED
for U6 CAPS LOCK led
LED1
CAP_LED
*2P WHITE
R140 *39_6
+3V_LED
for UT7 CAPS LOCK led

http://hobi-elektronika.net/

LED PWR CONTROL

07/09 (PV2) Add R703,R704,R705, remove Q21,Q22,Q25,Q26, R391,R393, C627,C639 for HP LED SPEC change.

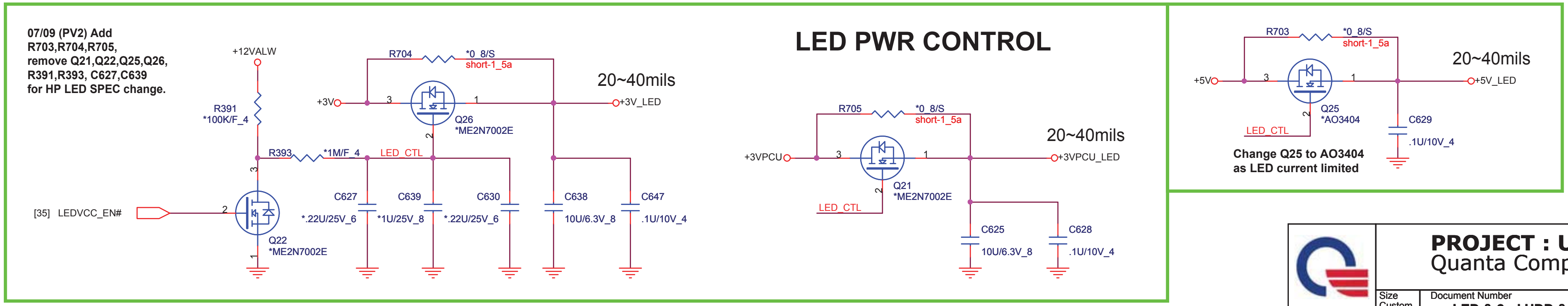
+12VALW
R391 *100K/F_4
R393 *1M/F_4
LED_CTL
[35] LEDVCC_EN#
Q22 *ME2N7002E
R704 *0_8/S short-1_5a
+3V
Q26 *ME2N7002E
+3V_LED
20~40mils
C627 *.22U/25V_6
C639 *1U/25V_8
C630 *.22U/25V_6
C638 10U/6.3V_8
C647 .1U/10V_4
R705 *0_8/S short-1_5a
+3VPCU
Q21 *ME2N7002E
LED_CTL
+3VPCU_LED
20~40mils
C625 10U/6.3V_8
C628 .1U/10V_4
R703 *0_8/S short-1_5a
+5V
Q25 *AO3404
LED_CTL
+5V_LED
20~40mils
C629 .1U/10V_4
Change Q25 to AO3404 as LED current limited

PROJECT : UT7
Quanta Computer Inc.
NB5

Size	Document Number	Rev
Custom	LED & 2nd HDD & Hole	E3A

Date: Friday, July 18, 2008 Sheet 30 of 46

BLUETOOTH

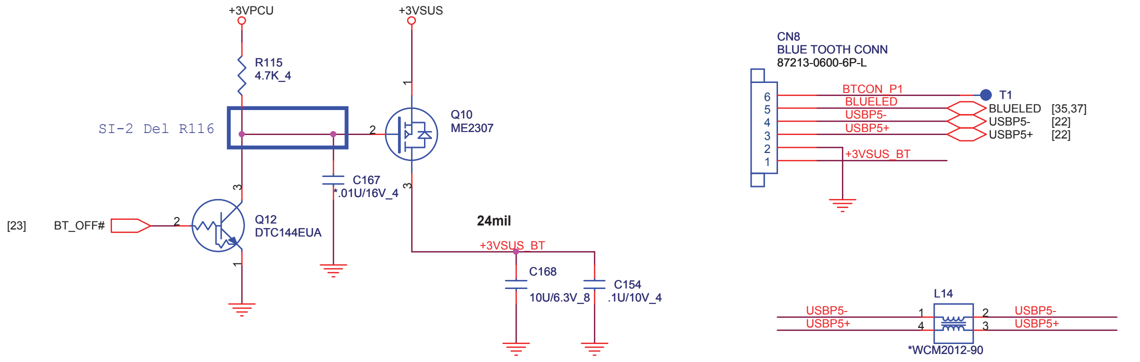
+3VPCU
+3VSUS
R115
4.7K_4
SI-2 Del R116
Q10
ME2307
C167
.01U/16V_4
Q12
DTC144EUA
[23] BT_OFF#
24mil
+3VSUS_BT
C168
10U/6.3V_8
C154
.1U/10V_4
CN8
BLUE TOOTH CONN
87213-0600-6P-L
BTCON_P1
BLUELED
USBP5-
USBP5+
+3VSUS_BT
T1
BLUELED [35,37]
USBP5- [22]
USBP5+ [22]
L14
USBP5-
USBP5+
*WCM2012-90

USBX1 and E-SATA

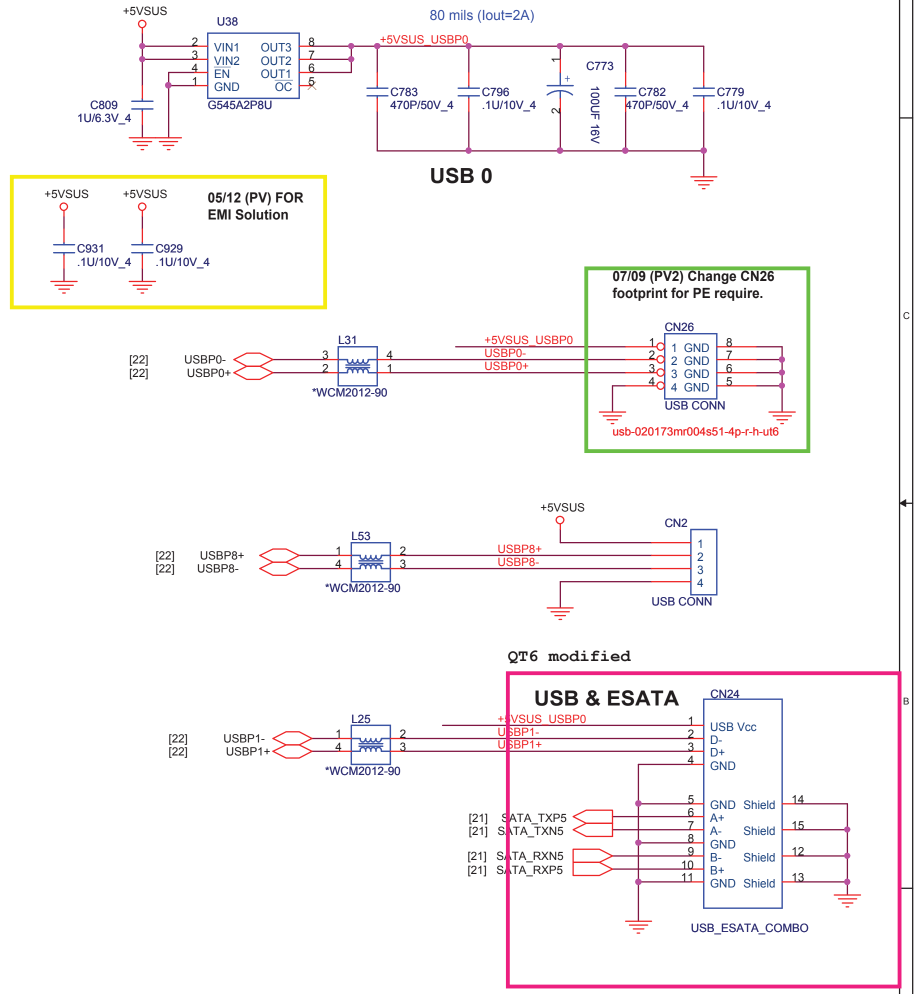
+5VSUS
U38
VIN1 OUT3
VIN2 OUT2
EN OUT1
GND OC
G545A2P8U
C809
1U/6.3V_4
80 mils (Iout=2A)
+5VSUS_USBP0
C783
470P/50V_4
C796
.1U/10V_4
C773
100UF 16V
C782
470P/50V_4
C779
.1U/10V_4
USB 0
+5VSUS
+5VSUS
C931
.1U/10V_4
C929
.1U/10V_4
05/12 (PV) FOR
EMI Solution
07/09 (PV2) Change CN26
footprint for PE require.
CN26
[22] USBP0-
[22] USBP0+
L31
*WCM2012-90
+5VSUS_USBP0
USBP0-
USBP0+
1 GND
2 GND
3 GND
4 GND
USB CONN
usb-020173mr004s51-4p-r-h-ut6
+5VSUS
CN2
[22] USBP8+
[22] USBP8-
L53
*WCM2012-90
USBP8+
USBP8-
USB CONN
QT6 modified
USB & ESATA
CN24
[22] USBP1-
[22] USBP1+
L25
*WCM2012-90
+5VSUS_USBP0
USBP1-
USBP1+
USB Vcc
D-
D+
GND
GND Shield
A+
A- Shield
GND
B- Shield
B+
GND Shield
[21] SATA_TXP5
[21] SATA_TXN5
[21] SATA_RXN5
[21] SATA_RXP5
USB_ESATA_COMBO

USB CAMERA /DIGITAL MIC CONNECT

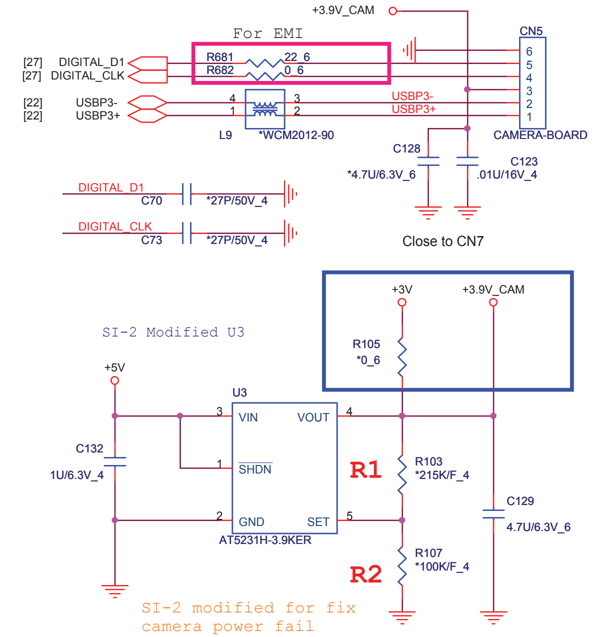
+3.9V_CAM
For EMI
[27] DIGITAL_D1
[27] DIGITAL_CLK
R681 22_6
R682 0_6
CN5
[22] USBP3-
[22] USBP3+
L9
*WCM2012-90
USBP3-
USBP3+
CAMERA-BOARD
C128
*4.7U/6.3V_6
C123
.01U/16V_4
DIGITAL_D1
C70
*27P/50V_4
DIGITAL_CLK
C73
*27P/50V_4
Close to CN7
+3V
+3.9V_CAM
R105
*0_6
SI-2 Modified U3
+5V
U3
VIN VOUT
SHDN
GND SET
AT5231H-3.9KER
C132
1U/6.3V_4
R1
R103
*215K/F_4
C129
4.7U/6.3V_6
R2
R107
*100K/F_4
SI-2 modified for fix
camera power fail

$$Vout=1.25(1+R1/R2)$$

USB fingerprint CON

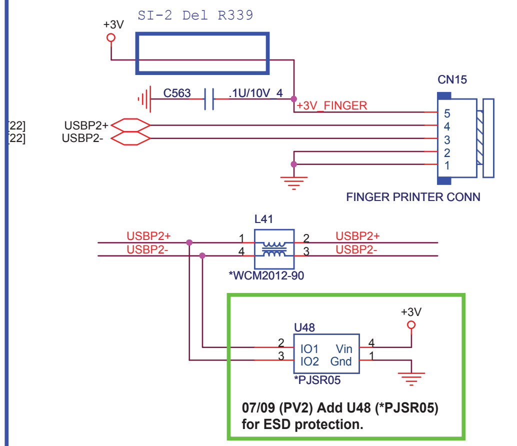
SI-2 Del R339
+3V
C563 .1U/10V_4
+3V_FINGER
CN15
[22] USBP2+
[22] USBP2-
FINGER PRINTER CONN
L41
USBP2+
USBP2-
*WCM2012-90
USBP2+
USBP2-
+3V
U48
IO1 Vin
IO2 Gnd
*PJSR05
07/09 (PV2) Add U48 (*PJSR05)
for ESD protection.

1. ESD GND
2. SYSTEM GND
3. USB-
4. USB+
5. USB PWR(+3V)

NB5

PROJECT : UT7
Quanta Computer Inc.

Size	Document Number	Rev
Custom	BT/WC/FT/TS/ESATA/USB	E3A

Date: Friday, July 18, 2008 Sheet 31 of 46

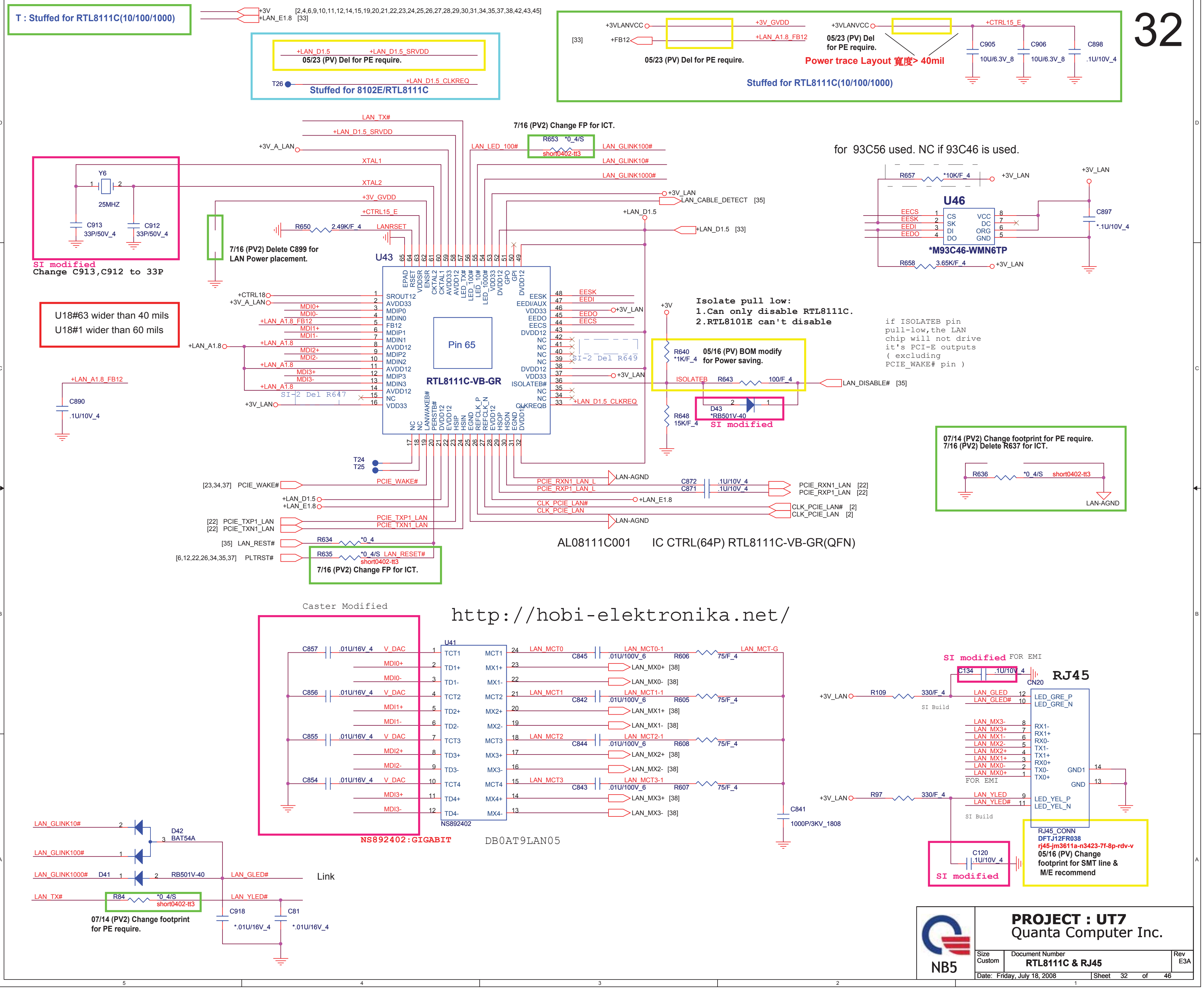
T : Stuffed for RTL8111C(10/100/1000)
+3V
+LAN_E1.8
[2,4,6,9,10,11,12,14,15,19,20,21,22,23,24,25,26,27,28,29,30,31,34,35,37,38,42,43,45]
[33]
+LAN_D1.5
+LAN_D1.5_SRVDD
05/23 (PV) Del for PE require.
T26
+LAN_D1.5_CLKREQ
Stuffed for 8102E/RTL8111C
+3VLANVCC
+3V_GVDD
[33]
+FB12
+LAN_A1.8_FB12
05/23 (PV) Del for PE require.
05/23 (PV) Del
for PE require.
Power trace Layout 寬度> 40mil
+CTRL15_E
C905
10U/6.3V_8
C906
10U/6.3V_8
C898
.1U/10V_4
Stuffed for RTL8111C(10/100/1000)
LAN_TX#
+LAN_D1.5_SRVDD
7/16 (PV2) Change FP for ICT.
R653 *0_4/S
short0402-tt3
+3V_A_LAN
LAN_LED_100#
LAN_GLINK100#
LAN_GLINK10#
LAN_GLINK1000#
XTAL1
XTAL2
Y6
25MHZ
C913
33P/50V_4
C912
33P/50V_4
SI modified
Change C913,C912 to 33P
+3V_GVDD
+CTRL15_E
R650
2.49K/F_4
LANRSET
7/16 (PV2) Delete C899 for
LAN Power placement.
U43
+3V_LAN
LAN_CABLE_DETECT [35]
+LAN_D1.5
+LAN_D1.5 [33]
for 93C56 used. NC if 93C46 is used.
R657
*10K/F_4
+3V_LAN
U46
EECS
EESK
EEDI
EEDO
CS
SK
DI
DO
VCC
DC
ORG
GND
C897
*.1U/10V_4
*M93C46-WMN6TP
R658
3.65K/F_4
+CTRL18
SROUT12
AVDD33
MDIP0
MDIN0
FB12
MDIP1
MDIN1
AVDD12
MDIP2
MDIN2
AVDD12
MDIP3
MDIN3
AVDD12
NC
VDD33
MDI0+
MDI0-
+LAN_A1.8_FB12
MDI1+
MDI1-
+LAN_A1.8
MDI2+
MDI2-
MDI3+
MDI3-
SI-2 Del R647
Pin 65
RTL8111C-VB-GR
EESK
EEDI/AUX
VDD33
EEDO
EECS
DVDD12
NC
ISOLATEB#
CLKREQB
SI-2 Del R649
+LAN_D1.5_CLKREQ
EPAD
RSET
VDDSR
ENSR
CKTAL2
CKTAL1
AVDD33
AVDD12
LED_100#
LED_10#
LED_1000#
VDD33
DVDD12
GPO
GPI
DVDD12
LANWAKEB#
PERSTB#
DVDD12
EVDD12
HSIP
HSIN
EGND
REFCLK_P
REFCLK_N
EVDD12
HSOP
HSON
EGND
DVDD12
U18#63 wider than 40 mils
U18#1 wider than 60 mils
+LAN_A1.8_FB12
C890
.1U/10V_4
+3V
Isolate pull low:
1.Can only disable RTL8111C.
2.RTL8101E can't disable
if ISOLATEB pin
pull-low,the LAN
chip will not drive
it's PCI-E outputs
(excluding
PCIE_WAKE# pin)
R640
*1K/F_4
05/16 (PV) BOM modify
for Power saving.
ISOLATEB
R643
100/F_4
LAN_DISABLE# [35]
D43
*RB501V-40
SI modified
R648
15K/F_4
07/14 (PV2) Change footprint for PE require.
7/16 (PV2) Delete R637 for ICT.
R636
*0_4/S
short0402-tt3
LAN-AGND
T24
T25
[23,34,37] PCIE_WAKE#
PCIE_WAKE#
PCIE_RXN1_LAN_L
PCIE_RXP1_LAN_L
C872
C871
.1U/10V_4
.1U/10V_4
PCIE_RXN1_LAN [22]
PCIE_RXP1_LAN [22]
+LAN_D1.5
+LAN_E1.8
CLK_PCIE_LAN#
CLK_PCIE_LAN
CLK_PCIE_LAN# [2]
CLK_PCIE_LAN [2]
[22] PCIE_TXP1_LAN
[22] PCIE_TXN1_LAN
PCIE_TXP1_LAN
PCIE_TXN1_LAN
[35] LAN_REST#
R634
*0_4
[6,12,22,26,34,35,37] PLTRST#
R635
*0_4/S
LAN_RESET#
short0402-tt3
7/16 (PV2) Change FP for ICT.
AL08111C001
IC CTRL(64P) RTL8111C-VB-GR(QFN)
Caster Modified
http://hobi-elektronika.net/
U41
C857
C856
C855
C854
.01U/16V_4
V_DAC
MDI0+
MDI0-
MDI1+
MDI1-
MDI2+
MDI2-
MDI3+
MDI3-
TCT1
TD1+
TD1-
TCT2
TD2+
TD2-
TCT3
TD3+
TD3-
TCT4
TD4+
TD4-
MCT1
MX1+
MX1-
MCT2
MX2+
MX2-
MCT3
MX3+
MX3-
MCT4
MX4+
MX4-
NS892402
NS892402:GIGABIT
DB0AT9LAN05
LAN_MCT0
LAN_MCT1
LAN_MCT2
LAN_MCT3
C845
C842
C844
C843
.01U/100V_6
LAN_MCT0-1
LAN_MCT1-1
LAN_MCT2-1
LAN_MCT3-1
R606
R605
R608
R607
75/F_4
LAN_MCT-G
LAN_MX0+ [38]
LAN_MX0- [38]
LAN_MX1+ [38]
LAN_MX1- [38]
LAN_MX2+ [38]
LAN_MX2- [38]
LAN_MX3+ [38]
LAN_MX3- [38]
C841
1000P/3KV_1808
SI modified FOR EMI
C134
.1U/10V_4
CN20
RJ45
+3V_LAN
R109
330/F_4
SI Build
LAN_GLED
LAN_GLED#
LED_GRE_P
LED_GRE_N
LAN_MX3-
LAN_MX3+
LAN_MX1-
LAN_MX2-
LAN_MX2+
LAN_MX1+
LAN_MX0-
LAN_MX0+
RX1-
RX1+
RX0-
TX1-
TX1+
RX0+
TX0-
TX0+
FOR EMI
GND1
GND
R97
330/F_4
LAN_YLED
LAN_YLED#
LED_YEL_P
LED_YEL_N
SI Build
RJ45_CONN
DFTJ12FR038
rj45-jm3611a-n3423-7f-8p-rdv-v
05/16 (PV) Change
footprint for SMT line &
M/E recommend
C120
.1U/10V_4
SI modified
LAN_GLINK10#
LAN_GLINK100#
D42
BAT54A
LAN_GLINK1000#
D41
RB501V-40
LAN_GLED#
Link
LAN_TX#
R84
*0_4/S
short0402-tt3
LAN_YLED#
07/14 (PV2) Change footprint
for PE require.
C918
*.01U/16V_4
C81
*.01U/16V_4

NB5

PROJECT : UT7
Quanta Computer Inc.

Size	Document Number	Rev
Custom	RTL8111C & RJ45	E3A

Date: Friday, July 18, 2008 Sheet 32 of 46

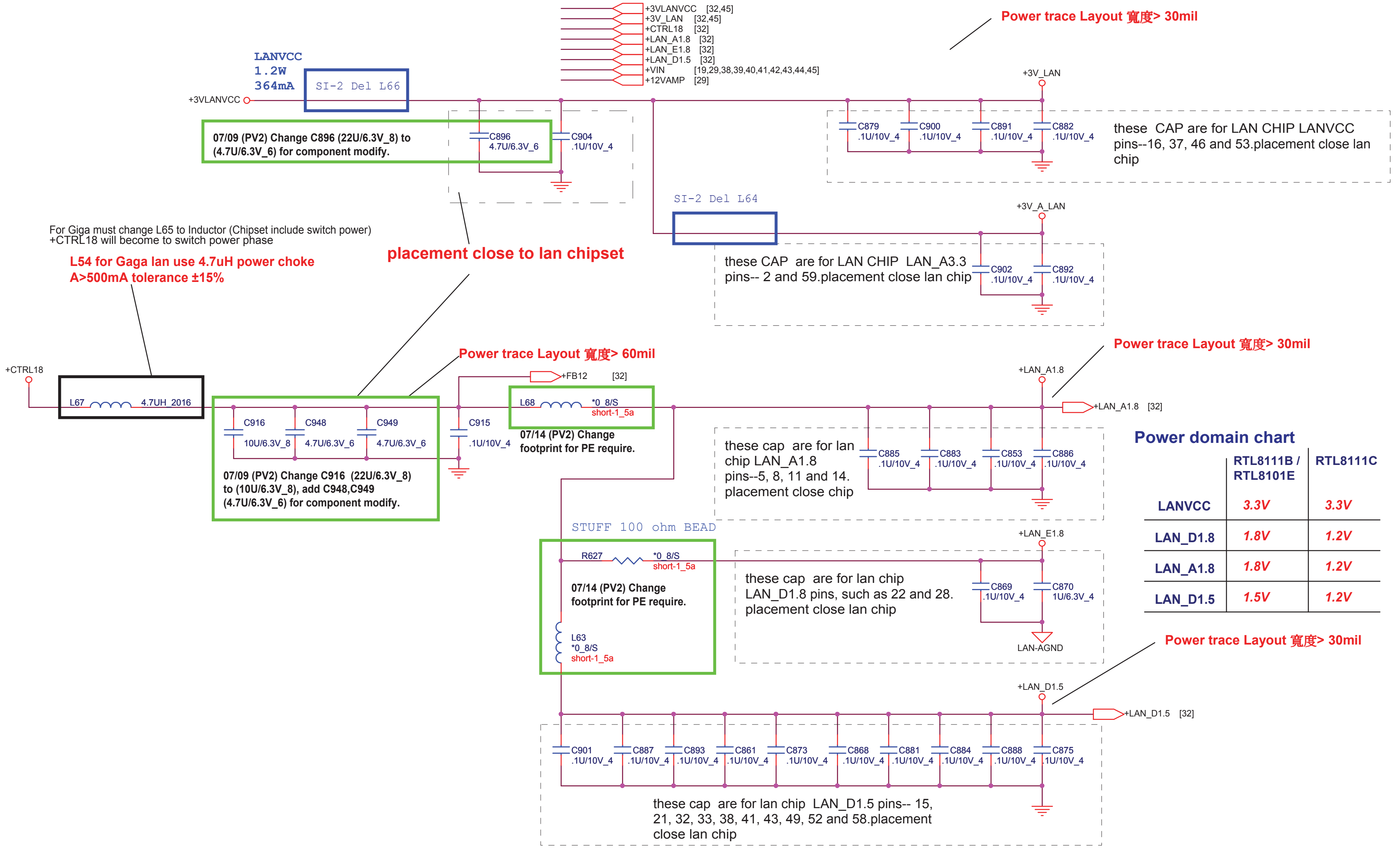
+3VLANVCC [32,45]
+3V_LAN [32,45]
+CTRL18 [32]
+LAN_A1.8 [32]
+LAN_E1.8 [32]
+LAN_D1.5 [32]
+VIN [19,29,38,39,40,41,42,43,44,45]
+12VAMP [29]
LANVCC
1.2W
364mA
SI-2 Del L66
+3VLANVCC
C896
4.7U/6.3V_6
C904
.1U/10V_4
+3V_LAN
C879
.1U/10V_4
C900
.1U/10V_4
C891
.1U/10V_4
C882
.1U/10V_4
SI-2 Del L64
+3V_A_LAN
C902
.1U/10V_4
C892
.1U/10V_4
+CTRL18
L67
4.7UH_2016
C916
10U/6.3V_8
C948
4.7U/6.3V_6
C949
4.7U/6.3V_6
C915
.1U/10V_4
+FB12 [32]
L68
*0_8/S
short-1_5a
+LAN_A1.8
+LAN_A1.8 [32]
C885
.1U/10V_4
C883
.1U/10V_4
C853
.1U/10V_4
C886
.1U/10V_4
STUFF 100 ohm BEAD
R627
*0_8/S
short-1_5a
L63
*0_8/S
short-1_5a
+LAN_E1.8
C869
.1U/10V_4
C870
1U/6.3V_4
LAN-AGND
+LAN_D1.5
+LAN_D1.5 [32]
C901
.1U/10V_4
C887
.1U/10V_4
C893
.1U/10V_4
C861
.1U/10V_4
C873
.1U/10V_4
C868
.1U/10V_4
C881
.1U/10V_4
C884
.1U/10V_4
C888
.1U/10V_4
C875
.1U/10V_4

Power trace Layout 寬度> 30mil

07/09 (PV2) Change C896 (22U/6.3V_8) to (4.7U/6.3V_6) for component modify.

these CAP are for LAN CHIP LANVCC pins--16, 37, 46 and 53.placement close lan chip

For Giga must change L65 to Inductor (Chipset include switch power)
+CTRL18 will become to switch power phase

L54 for Gaga lan use 4.7uH power choke
A>500mA tolerance ±15%

placement close to lan chipset

these CAP are for LAN CHIP LAN_A3.3 pins-- 2 and 59.placement close lan chip

Power trace Layout 寬度> 60mil

Power trace Layout 寬度> 30mil

07/14 (PV2) Change footprint for PE require.

07/09 (PV2) Change C916 (22U/6.3V_8) to (10U/6.3V_8), add C948,C949 (4.7U/6.3V_6) for component modify.

these cap are for lan chip LAN_A1.8 pins--5, 8, 11 and 14. placement close chip

07/14 (PV2) Change footprint for PE require.

these cap are for lan chip LAN_D1.8 pins, such as 22 and 28. placement close lan chip

Power trace Layout 寬度> 30mil

these cap are for lan chip LAN_D1.5 pins-- 15, 21, 32, 33, 38, 41, 43, 49, 52 and 58.placement close lan chip

Power domain chart

	RTL8111B / RTL8101E	RTL8111C
LANVCC	3.3V	3.3V
LAN_D1.8	1.8V	1.2V
LAN_A1.8	1.8V	1.2V
LAN_D1.5	1.5V	1.2V

NB5

PROJECT : UT7
Quanta Computer Inc.

Size	Document Number	Rev
A3	**LAN Power**	E3A

Date: Friday, July 18, 2008 Sheet 33 of 46

SATA CD-ROM

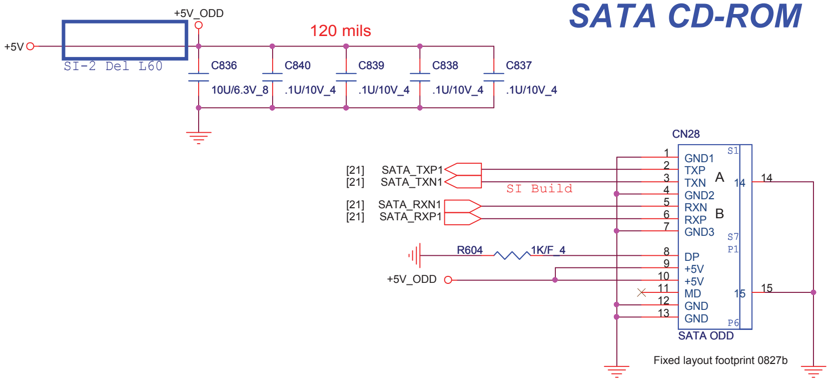
+5V
+5V_ODD
SI-2 Del L60
120 mils
C836
10U/6.3V_8
C840
.1U/10V_4
C839
.1U/10V_4
C838
.1U/10V_4
C837
.1U/10V_4
CN28
[21] SATA_TXP1
[21] SATA_TXN1
[21] SATA_RXN1
[21] SATA_RXP1
SI Build
R604
1K/F_4
+5V_ODD
GND1
TXP
TXN
GND2
RXN
RXP
GND3
DP
+5V
+5V
MD
GND
GND
A
B
S1
S7
P1
P6
14
15
SATA ODD
Fixed layout footprint 0827b

NEWCARD

NEWCARD (PCIEXPRESS*1 + USB*1)

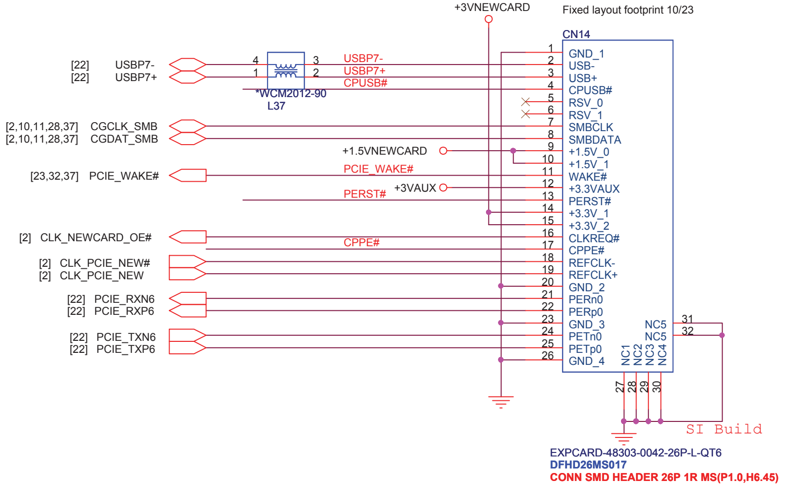
+3VNEWCARD
Fixed layout footprint 10/23
CN14
[22] USBP7-
[22] USBP7+
*WCM2012-90
L37
USBP7-
USBP7+
CPUSB#
[2,10,11,28,37] CGCLK_SMB
[2,10,11,28,37] CGDAT_SMB
+1.5VNEWCARD
[23,32,37] PCIE_WAKE#
PCIE_WAKE#
+3VAUX
PERST#
[2] CLK_NEWCARD_OE#
CPPE#
[2] CLK_PCIE_NEW#
[2] CLK_PCIE_NEW
[22] PCIE_RXN6
[22] PCIE_RXP6
[22] PCIE_TXN6
[22] PCIE_TXP6
GND_1
USB-
USB+
CPUSB#
RSV_0
RSV_1
SMBCLK
SMBDATA
+1.5V_0
+1.5V_1
WAKE#
+3.3VAUX
PERST#
+3.3V_1
+3.3V_2
CLKREQ#
CPPE#
REFCLK-
REFCLK+
GND_2
PERn0
PERp0
GND_3
PETn0
PETp0
GND_4
NC5
NC5
NC1
NC2
NC3
NC4
SI Build
EXPCARD-48303-0042-26P-L-QT6
DFHD26MS017
CONN SMD HEADER 26P 1R MS(P1.0,H6.45)

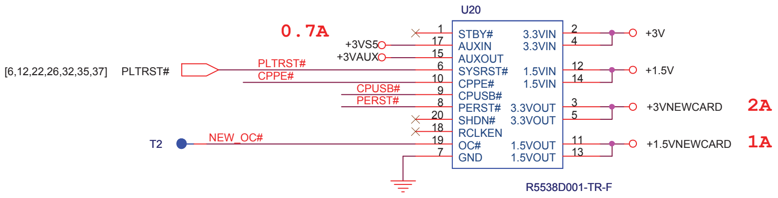
U20
0.7A
+3VS5
+3VAUX
[6,12,22,26,32,35,37] PLTRST#
PLTRST#
CPPE#
CPUSB#
PERST#
T2
NEW_OC#
STBY#
AUXIN
AUXOUT
SYSRST#
CPPE#
CPUSB#
PERST#
SHDN#
RCLKEN
OC#
GND
3.3VIN
3.3VIN
1.5VIN
1.5VIN
3.3VOUT
3.3VOUT
1.5VOUT
1.5VOUT
+3V
+1.5V
+3VNEWCARD
2A
+1.5VNEWCARD
1A
R5538D001-TR-F

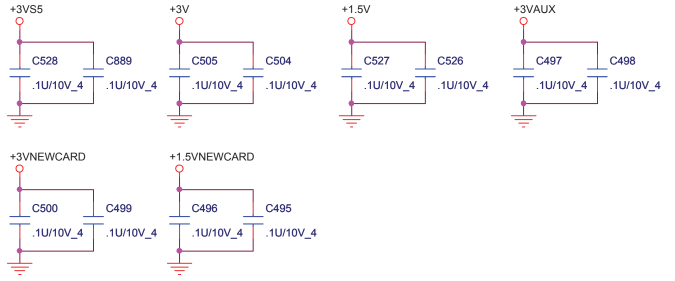
+3VS5
C528
.1U/10V_4
C889
.1U/10V_4
+3V
C505
.1U/10V_4
C504
.1U/10V_4
+1.5V
C527
.1U/10V_4
C526
.1U/10V_4
+3VAUX
C497
.1U/10V_4
C498
.1U/10V_4
+3VNEWCARD
C500
.1U/10V_4
C499
.1U/10V_4
+1.5VNEWCARD
C496
.1U/10V_4
C495
.1U/10V_4

SATA_1 CONNECTOR

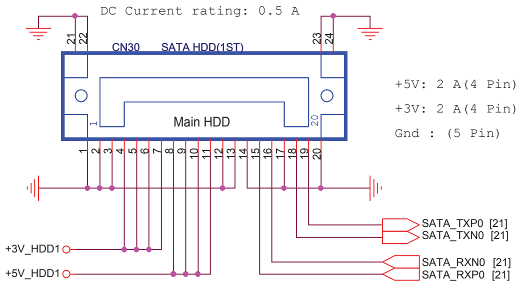
DC Current rating: 0.5 A
CN30
SATA HDD(1ST)
Main HDD
+5V: 2 A(4 Pin)
+3V: 2 A(4 Pin)
Gnd : (5 Pin)
+3V_HDD1
+5V_HDD1
SATA_TXP0 [21]
SATA_TXN0 [21]
SATA_RXN0 [21]
SATA_RXP0 [21]

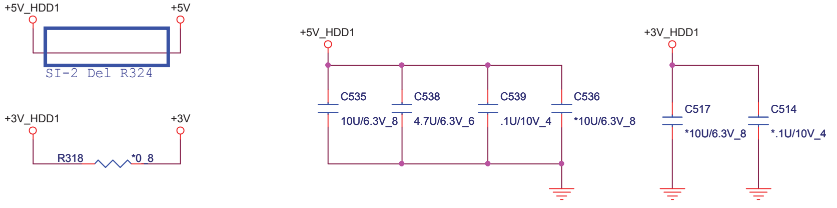
+5V_HDD1
+5V
SI-2 Del R324
+3V_HDD1
+3V
R318
*0_8
+5V_HDD1
C535
10U/6.3V_8
C538
4.7U/6.3V_6
C539
.1U/10V_4
C536
*10U/6.3V_8
+3V_HDD1
C517
*10U/6.3V_8
C514
*.1U/10V_4

NB5

PROJECT : UT7
Quanta Computer Inc.

Size	Document Number	Rev
Custom	ODD/HDD/NEW CARD	E3A

Date: Friday, July 18, 2008 Sheet 34 of 46

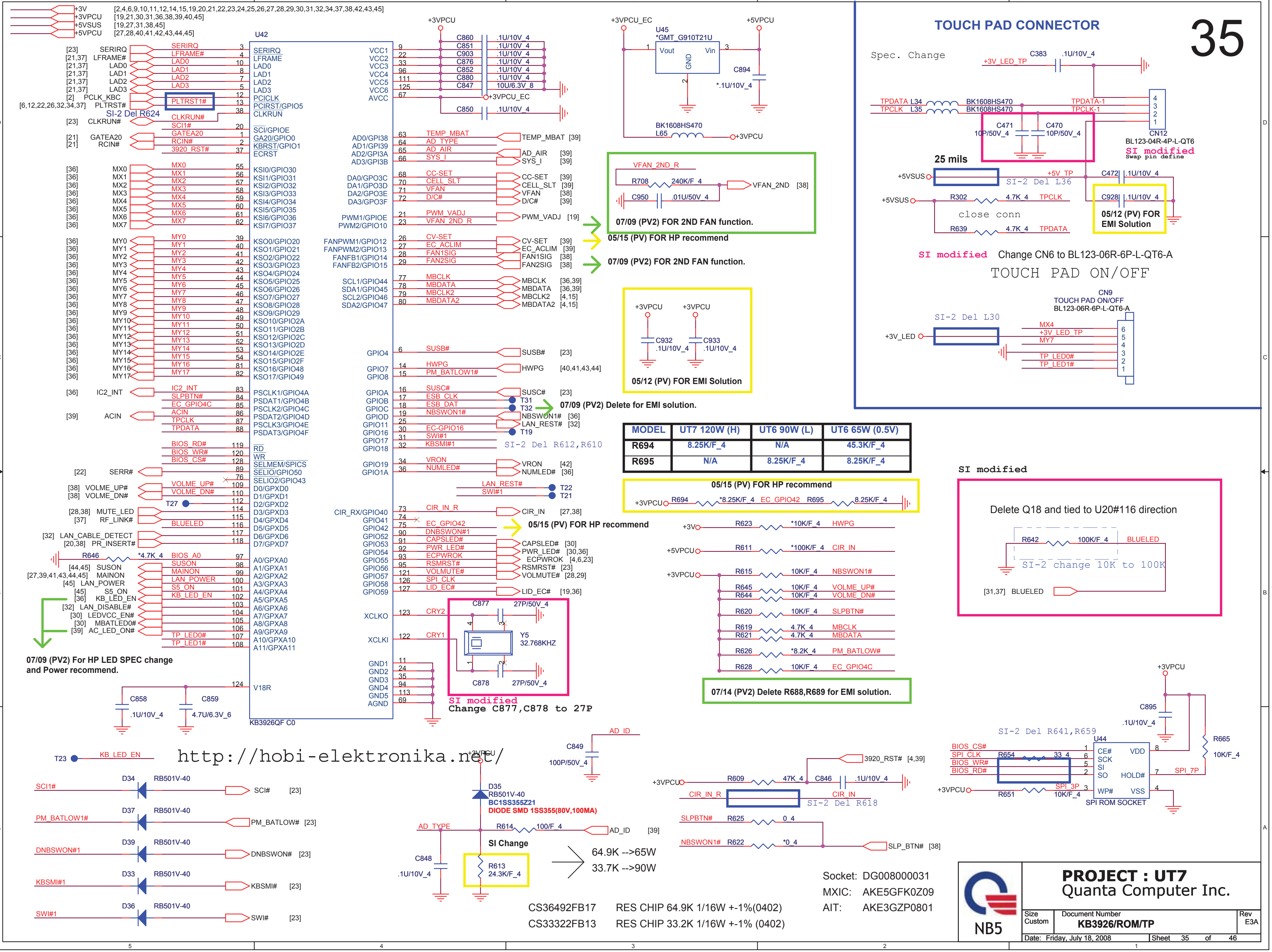
+3V
+3VPCU
+5VSUS
+5VPCU
U42
KB3926QF C0
SERIRQ
LFRAME#
LAD0
LAD1
LAD2
LAD3
PCICLK
PCIRST/GPIO5
CLKRUN
SCI/GPIOE
GA20/GPIO0
KBRST/GPIO1
ECRST
PLTRST#
SI-2 Del R624
CLKRUN#
SCI1#
GATEA20
RCIN#
3920_RST#
VCC1
VCC2
VCC3
VCC4
VCC5
VCC6
AVCC
V18R
GND1
GND2
GND3
GND4
GND5
AGND
XCLKO
XCLKI
CRY2
CRY1
C877
C878
27P/50V_4
Y5
32.768KHZ
TEMP_MBAT
AD_TYPE
SYS_I
CC-SET
CELL_SLT
VFAN
D/C#
PWM_VADJ
VFAN_2ND_R
CV-SET
EC_ACLIM
FAN1SIG
FAN2SIG
MBCLK
MBDATA
MBCLK2
MBDATA2
SUSB#
HWPG
PM_BATLOW1#
SUSC#
ESB_CLK
ESB_DAT
NBSWON1#
EC-GPIO16
SWI#1
KBSMI#1
VRON
NUMLED#
LAN_REST#
CIR_IN_R
EC_GPIO42
DNBSWON#1
CAPSLED#
PWR_LED#
ECPWROK
RSMRST#
VOLMUTE#
SPI_CLK
LID_EC#
BIOS_RD#
BIOS_WR#
BIOS_CS#
VOLME_UP#
VOLME_DN#
BLUELED
BIOS_A0
SUSON
MAINON
LAN_POWER
S5_ON
KB_LED_EN
TP_LED0#
TP_LED1#
U45
*GMT_G910T21U
Vout
Vin
GND
C894
BK1608HS470
L65
VFAN_2ND_R
R708
240K/F_4
VFAN_2ND
C950
.01U/50V_4
C932
C933
.1U/10V_4
R694
R695
*8.25K/F_4
8.25K/F_4
EC_GPIO42
R623
*10K/F_4
R611
*100K/F_4
CIR_IN
R615
10K/F_4
NBSWON1#
R645
R644
VOLME_UP#
VOLME_DN#
R620
SLPBTN#
R619
R621
4.7K_4
R626
*8.2K_4
PM_BATLOW#
R628
EC_GPIO4C
D34
D35
D36
D37
D39
D33
RB501V-40
BC1SS355Z21
DIODE SMD 1SS355(80V,100MA)
SCI#
PM_BATLOW#
DNBSWON#
KBSMI#
SWI#
AD_TYPE
R614
100/F_4
AD_ID
C848
C849
100P/50V_4
R613
24.3K/F_4
R609
47K_4
C846
CIR_IN_R
SI-2 Del R618
R625
R622
SLP_BTN#
U44
CE#
SCK
SI
SO
VDD
HOLD#
WP#
VSS
SPI ROM SOCKET
R654
R651
R665
10K/F_4
C895
SI-2 Del R641,R659
SPI_7P
SPI_3P
TOUCH PAD CONNECTOR
Spec. Change
C383
+3V_LED_TP
TPDATA
TPCLK
L34
L35
BK1608HS470
TPDATA-1
TPCLK-1
C471
C470
10P/50V_4
CN12
BL123-04R-4P-L-QT6
SI modified
Swap pin define
25 mils
+5VSUS
SI-2 Del L36
+5V_TP
C472
C928
R302
R639
4.7K_4
close conn
05/12 (PV) FOR EMI Solution
SI modified
Change CN6 to BL123-06R-6P-L-QT6-A
TOUCH PAD ON/OFF
CN9
TOUCH PAD ON/OFF
BL123-06R-6P-L-QT6-A
SI-2 Del L30
+3V_LED
MX4
MY7
TP_LED0#
TP_LED1#
R642
100K/F_4
BLUELED
SI-2 change 10K to 100K
T23
KB_LED_EN

07/09 (PV2) FOR 2ND FAN function.

05/15 (PV) FOR HP recommend

07/09 (PV2) FOR 2ND FAN function.

05/12 (PV) FOR EMI Solution

07/09 (PV2) Delete for EMI solution.

SI-2 Del R612,R610

MODEL	UT7 120W (H)	UT6 90W (L)	UT6 65W (0.5V)
R694	8.25K/F_4	N/A	45.3K/F_4
R695	N/A	8.25K/F_4	8.25K/F_4

05/15 (PV) FOR HP recommend

05/15 (PV) FOR HP recommend

SI modified

Delete Q18 and tied to U20#116 direction

07/09 (PV2) For HP LED SPEC change and Power recommend.

SI modified
Change C877,C878 to 27P

07/14 (PV2) Delete R688,R689 for EMI solution.

http://hobi-elektronika.net/

SI Change

64.9K -->65W
33.7K -->90W

CS36492FB17 RES CHIP 64.9K 1/16W +-1%(0402)
CS33322FB13 RES CHIP 33.2K 1/16W +-1% (0402)

Socket: DG008000031
MXIC: AKE5GFK0Z09
AIT: AKE3GZP0801

PROJECT : UT7
Quanta Computer Inc.
NB5

Size	Document Number	Rev
Custom	KB3926/ROM/TP	E3A

Date: Friday, July 18, 2008 Sheet 35 of 46

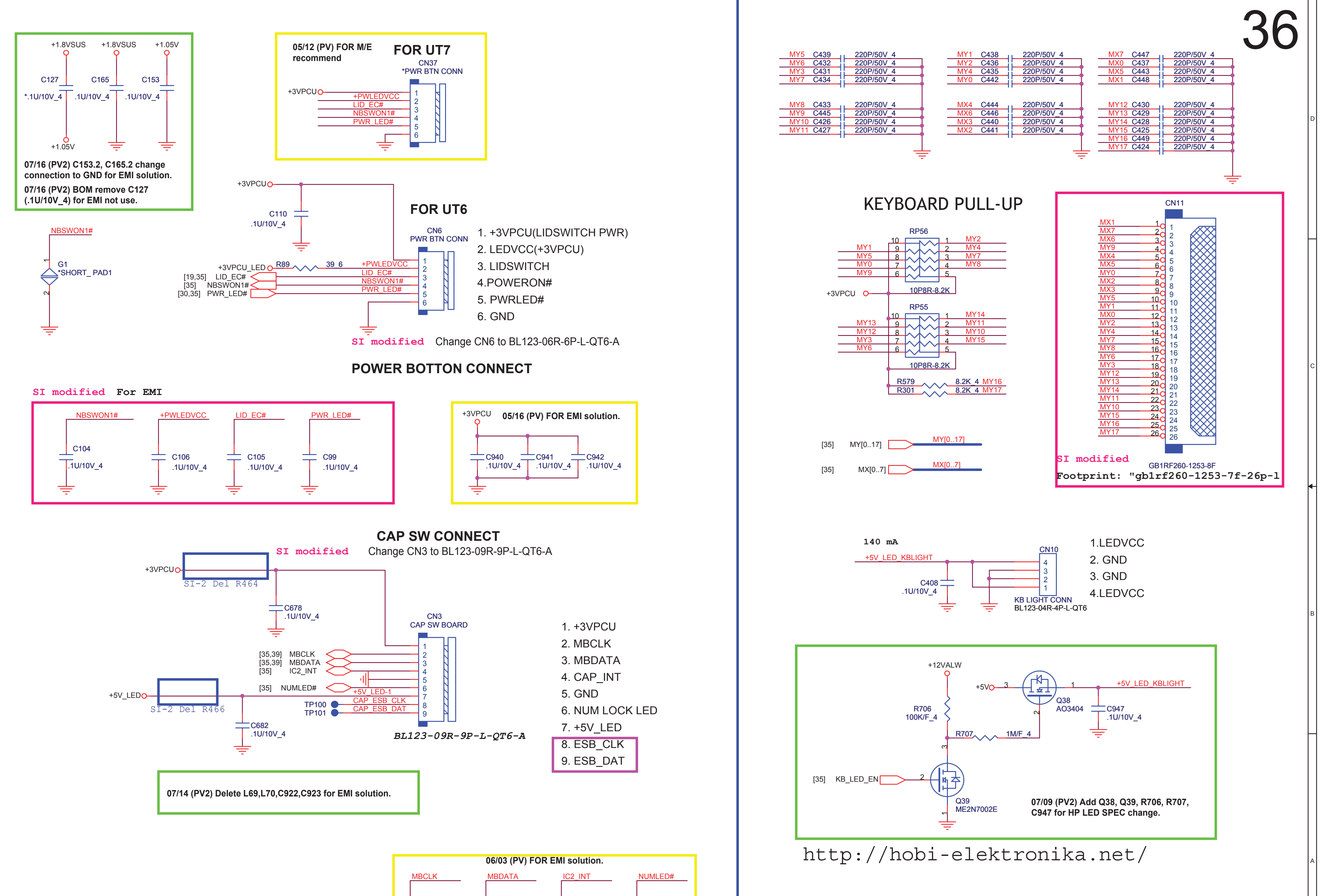
+1.8VSUS
+1.8VSUS
+1.05V
C127
C165
C153
*.1U/10V_4
.1U/10V_4
.1U/10V_4
+1.05V
05/12 (PV) FOR M/E
recommend
FOR UT7
CN37
*PWR BTN CONN
+3VPCU
+PWLEDVCC
LID_EC#
NBSWON1#
PWR_LED#
1
2
3
4
5
6
+3VPCU
C110
.1U/10V_4
FOR UT6
CN6
PWR BTN CONN
+3VPCU_LED
R89
39_6
+PWLEDVCC
LID_EC#
NBSWON1#
PWR_LED#
[19,35] LID_EC#
[35] NBSWON1#
[30,35] PWR_LED#
NBSWON1#
G1
*SHORT_PAD1
1. +3VPCU(LIDSWITCH PWR)
2. LEDVCC(+3VPCU)
3. LIDSWITCH
4.POWERON#
5. PWRLED#
6. GND
SI modified
Change CN6 to BL123-06R-6P-L-QT6-A
POWER BOTTON CONNECT
SI modified
For EMI
NBSWON1#
+PWLEDVCC
LID_EC#
PWR_LED#
C104
.1U/10V_4
C106
.1U/10V_4
C105
.1U/10V_4
C99
.1U/10V_4
+3VPCU
05/16 (PV) FOR EMI solution.
C940
.1U/10V_4
C941
.1U/10V_4
C942
.1U/10V_4
CAP SW CONNECT
SI modified
Change CN3 to BL123-09R-9P-L-QT6-A
+3VPCU
SI-2 Del R464
C678
.1U/10V_4
CN3
CAP SW BOARD
[35,39] MBCLK
[35,39] MBDATA
[35] IC2_INT
[35] NUMLED#
+5V_LED-1
CAP_ESB_CLK
CAP_ESB_DAT
TP100
TP101
+5V_LED
SI-2 Del R466
C682
.1U/10V_4
BL123-09R-9P-L-QT6-A
1. +3VPCU
2. MBCLK
3. MBDATA
4. CAP_INT
5. GND
6. NUM LOCK LED
7. +5V_LED
8. ESB_CLK
9. ESB_DAT
06/03 (PV) FOR EMI solution.
MBCLK
MBDATA
IC2_INT
NUMLED#
C686
33P/50V_4
C685
33P/50V_4
C684
220P/50V_4
C683
220P/50V_4
MY5 C439 220P/50V_4
MY6 C432 220P/50V_4
MY3 C431 220P/50V_4
MY7 C434 220P/50V_4
MY8 C433 220P/50V_4
MY9 C445 220P/50V_4
MY10 C426 220P/50V_4
MY11 C427 220P/50V_4
MY1 C438 220P/50V_4
MY2 C436 220P/50V_4
MY4 C435 220P/50V_4
MY0 C442 220P/50V_4
MX4 C444 220P/50V_4
MX6 C446 220P/50V_4
MX3 C440 220P/50V_4
MX2 C441 220P/50V_4
MX7 C447 220P/50V_4
MX0 C437 220P/50V_4
MX5 C443 220P/50V_4
MX1 C448 220P/50V_4
MY12 C430 220P/50V_4
MY13 C429 220P/50V_4
MY14 C428 220P/50V_4
MY15 C425 220P/50V_4
MY16 C449 220P/50V_4
MY17 C424 220P/50V_4
KEYBOARD PULL-UP
RP56
MY1
MY5
MY0
MY9
MY2
MY4
MY7
MY8
10P8R-8.2K
+3VPCU
RP55
MY13
MY12
MY3
MY6
MY14
MY11
MY10
MY15
10P8R-8.2K
R579 8.2K_4 MY16
R301 8.2K_4 MY17
[35] MY[0..17]
MY[0..17]
[35] MX[0..7]
MX[0..7]
CN11
MX1
MX7
MX6
MY9
MX4
MX5
MY0
MX2
MX3
MY5
MY1
MX0
MY2
MY4
MY7
MY8
MY6
MY3
MY12
MY13
MY14
MY11
MY10
MY15
MY16
MY17
SI modified
GB1RF260-1253-8F
Footprint: "gb1rf260-1253-7f-26p-l
140 mA
+5V_LED_KBLIGHT
C408
.1U/10V_4
CN10
KB LIGHT CONN
BL123-04R-4P-L-QT6
1.LEDVCC
2. GND
3. GND
4.LEDVCC
+12VALW
+5V
Q38
AO3404
+5V_LED_KBLIGHT
C947
.1U/10V_4
R706
100K/F_4
R707
1M/F_4
[35] KB_LED_EN
Q39
ME2N7002E

07/16 (PV2) C153.2, C165.2 change connection to GND for EMI solution.

07/16 (PV2) BOM remove C127 (.1U/10V_4) for EMI not use.

07/14 (PV2) Delete L69,L70,C922,C923 for EMI solution.

07/09 (PV2) Add Q38, Q39, R706, R707, C947 for HP LED SPEC change.

http://hobi-elektronika.net/

PROJECT : UT7
Quanta Computer Inc.
NB5
Size: Custom
Document Number: **KB/CAP/POWER CONN**
Rev: E3A
Date: Friday, July 18, 2008
Sheet 36 of 46

Mini PCI-E Card 1 WLAN

Delete R110,R78

+3V must have a 120mil plane
Each pin 25mil

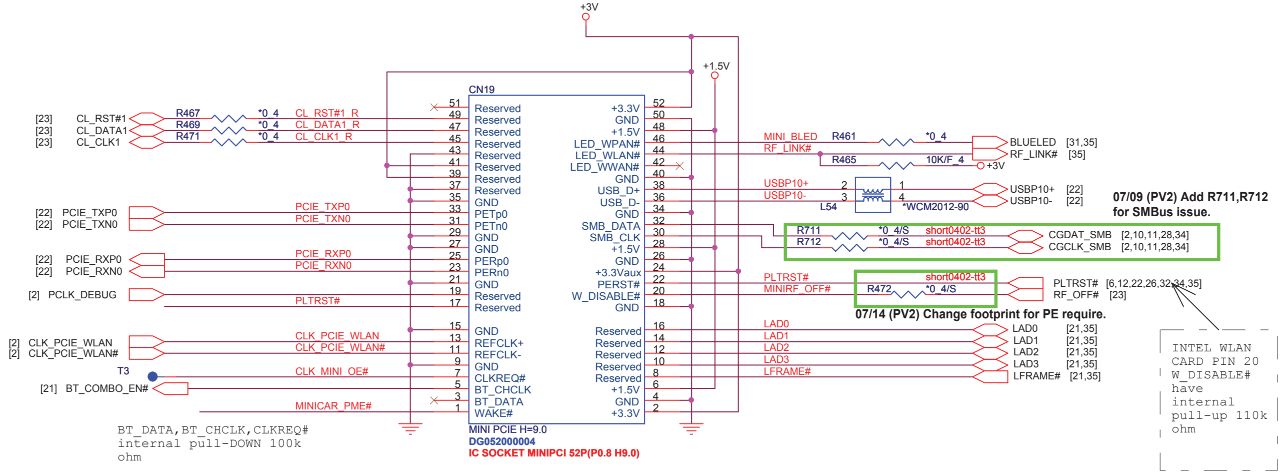
+3V
+1.5V
CN19
51 Reserved
49 Reserved
47 Reserved
45 Reserved
43 Reserved
41 Reserved
39 Reserved
37 Reserved
35 GND
33 PETp0
31 PETn0
29 GND
27 GND
25 PERp0
23 PERn0
21 GND
19 Reserved
17 Reserved
15 GND
13 REFCLK+
11 REFCLK-
9 GND
7 CLKREQ#
5 BT_CHCLK
3 BT_DATA
1 WAKE#
+3.3V 52
GND 50
+1.5V 48
LED_WPAN# 46
LED_WLAN# 44
LED_WWAN# 42
GND 40
USB_D+ 38
USB_D- 36
GND 34
SMB_DATA 32
SMB_CLK 30
+1.5V 28
GND 26
+3.3Vaux 24
PERST# 22
W_DISABLE# 20
GND 18
Reserved 16
Reserved 14
Reserved 12
Reserved 10
Reserved 8
+1.5V 6
GND 4
+3.3V 2
MINI PCIE H=9.0
DG052000004
IC SOCKET MINIPCI 52P(P0.8 H9.0)
[23] CL_RST#1
[23] CL_DATA1
[23] CL_CLK1
R467
R469
R471
*0_4
*0_4
*0_4
CL_RST#1_R
CL_DATA1_R
CL_CLK1_R
[22] PCIE_TXP0
[22] PCIE_TXN0
PCIE_TXP0
PCIE_TXN0
[22] PCIE_RXP0
[22] PCIE_RXN0
PCIE_RXP0
PCIE_RXN0
[2] PCLK_DEBUG
PLTRST#
[2] CLK_PCIE_WLAN
[2] CLK_PCIE_WLAN#
CLK_PCIE_WLAN
CLK_PCIE_WLAN#
T3
CLK_MINI_OE#
[21] BT_COMBO_EN#
MINICAR_PME#
MINI_BLED
RF_LINK#
R461
*0_4
R465
10K/F_4
+3V
BLUELED [31,35]
RF_LINK# [35]
USBP10+
USBP10-
2
3
1
4
L54
*WCM2012-90
USBP10+ [22]
USBP10- [22]
R711
R712
*0_4/S
*0_4/S
short0402-tt3
short0402-tt3
CGDAT_SMB [2,10,11,28,34]
CGCLK_SMB [2,10,11,28,34]
PLTRST#
MINIRF_OFF#
R472
*0_4/S
short0402-tt3
PLTRST# [6,12,22,26,32,34,35]
RF_OFF# [23]
LAD0
LAD1
LAD2
LAD3
LFRAME#
LAD0 [21,35]
LAD1 [21,35]
LAD2 [21,35]
LAD3 [21,35]
LFRAME# [21,35]

07/09 (PV2) Add R711,R712 for SMBus issue.

07/14 (PV2) Change footprint for PE require.

INTEL WLAN CARD PIN 20 W_DISABLE# have internal pull-up 110k ohm

BT_DATA,BT_CHCLK,CLKREQ# internal pull-DOWN 100k ohm

Del C36,C37;

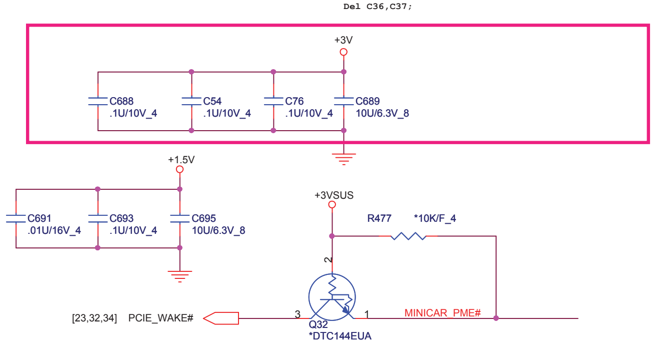
+3V
C688
.1U/10V_4
C54
.1U/10V_4
C76
.1U/10V_4
C689
10U/6.3V_8
+1.5V
C691
.01U/16V_4
C693
.1U/10V_4
C695
10U/6.3V_8
+3VSUS
R477
*10K/F_4
2
3
1
Q32
*DTC144EUA
[23,32,34] PCIE_WAKE#
MINICAR_PME#

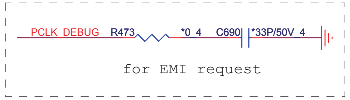
PCLK_DEBUG
R473
*0_4
C690
*33P/50V_4

for EMI request

http://hobi-elektronika.net/

Mini PCI-E Card 2 ROBSON

07/09 (PV2) Delete for no support ROBSON card.

Mini PCI-E Card 3 TV Tuner

SI-2 Del R325

MIPCIE-AS0B223-S40N-7F-52P-QT6

WWAN -- have 2.8A 7W power consumption
power pin 24.39.41
GND pin 37,43
need to be careful power rail

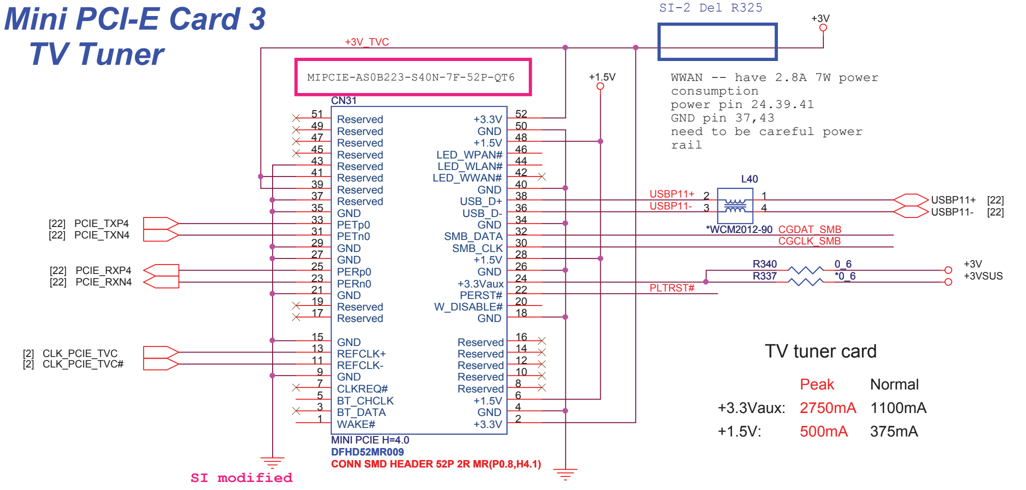
+3V_TVC
+3V
+1.5V
CN31
51 Reserved
49 Reserved
47 Reserved
45 Reserved
43 Reserved
41 Reserved
39 Reserved
37 Reserved
35 GND
33 PETp0
31 PETn0
29 GND
27 GND
25 PERp0
23 PERn0
21 GND
19 Reserved
17 Reserved
15 GND
13 REFCLK+
11 REFCLK-
9 GND
7 CLKREQ#
5 BT_CHCLK
3 BT_DATA
1 WAKE#
+3.3V 52
GND 50
+1.5V 48
LED_WPAN# 46
LED_WLAN# 44
LED_WWAN# 42
GND 40
USB_D+ 38
USB_D- 36
GND 34
SMB_DATA 32
SMB_CLK 30
+1.5V 28
GND 26
+3.3Vaux 24
PERST# 22
W_DISABLE# 20
GND 18
Reserved 16
Reserved 14
Reserved 12
Reserved 10
Reserved 8
+1.5V 6
GND 4
+3.3V 2
MINI PCIE H=4.0
DFHD52MR009
CONN SMD HEADER 52P 2R MR(P0.8,H4.1)
[22] PCIE_TXP4
[22] PCIE_TXN4
[22] PCIE_RXP4
[22] PCIE_RXN4
[2] CLK_PCIE_TVC
[2] CLK_PCIE_TVC#
USBP11+
USBP11-
L40
2
3
1
4
*WCM2012-90
USBP11+ [22]
USBP11- [22]
CGDAT_SMB
CGCLK_SMB
R340
R337
0_6
*0_6
+3V
+3VSUS
PLTRST#

SI modified

TV tuner card

	Peak	Normal
+3.3Vaux:	2750mA	1100mA
+1.5V:	500mA	375mA

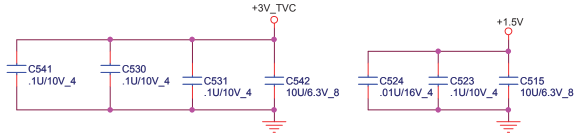
+3V_TVC
C541
.1U/10V_4
C530
.1U/10V_4
C531
.1U/10V_4
C542
10U/6.3V_8
+1.5V
C524
.01U/16V_4
C523
.1U/10V_4
C515
10U/6.3V_8

NB5

PROJECT : UT7
Quanta Computer Inc.

Size	Document Number	Rev
Custom	MINI PCIE CONN X2 & HOLE	E3A

Date: Friday, July 18, 2008 Sheet 37 of 46

CABLE DOCK

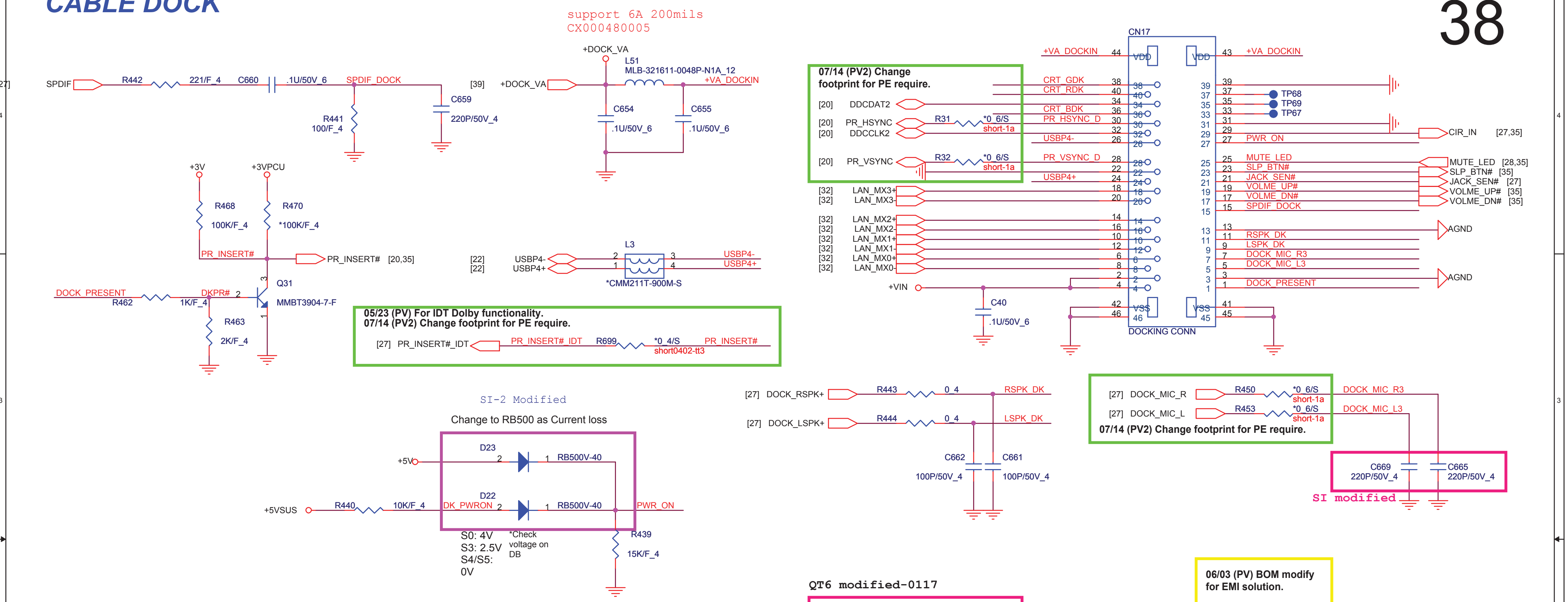
support 6A 200mils
CX000480005
[27] SPDIF
R442 221/F_4
C660 .1U/50V_6
SPDIF_DOCK
R441 100/F_4
C659 220P/50V_4
[39] +DOCK_VA
+DOCK_VA
L51 MLB-321611-0048P-N1A_12
+VA_DOCKIN
C654 .1U/50V_6
C655 .1U/50V_6
+3V
+3VPCU
R468 100K/F_4
R470 *100K/F_4
PR_INSERT#
PR_INSERT# [20,35]
Q31 MMBT3904-7-F
DOCK_PRESENT
R462 1K/F_4
DKPR#
R463 2K/F_4
[22] USBP4-
[22] USBP4+
L3 *CMM211T-900M-S
USBP4-
USBP4+
05/23 (PV) For IDT Dolby functionality.
07/14 (PV2) Change footprint for PE require.
[27] PR_INSERT#_IDT
PR_INSERT#_IDT
R699 *0_4/S short0402-tt3
PR_INSERT#
07/14 (PV2) Change footprint for PE require.
[20] DDCDAT2
[20] PR_HSYNC
[20] DDCCLK2
[20] PR_VSYNC
R31 *0_6/S short-1a
R32 *0_6/S short-1a
[32] LAN_MX3+
[32] LAN_MX3-
[32] LAN_MX2+
[32] LAN_MX2-
[32] LAN_MX1+
[32] LAN_MX1-
[32] LAN_MX0+
[32] LAN_MX0-
+VIN
C40 .1U/50V_6
CN17
DOCKING CONN
+VA_DOCKIN
VDD
CRT_GDK
CRT_RDK
CRT_BDK
PR_HSYNC_D
USBP4-
PR_VSYNC_D
USBP4+
TP68
TP69
TP67
CIR_IN [27,35]
PWR_ON
MUTE_LED
SLP_BTN#
JACK_SEN#
VOLME_UP#
VOLME_DN#
SPDIF_DOCK
MUTE_LED [28,35]
SLP_BTN# [35]
JACK_SEN# [27]
VOLME_UP# [35]
VOLME_DN# [35]
AGND
RSPK_DK
LSPK_DK
DOCK_MIC_R3
DOCK_MIC_L3
DOCK_PRESENT
VSS
SI-2 Modified
Change to RB500 as Current loss
+5V
D23 RB500V-40
D22 RB500V-40
+5VSUS
R440 10K/F_4
DK_PWRON
PWR_ON
R439 15K/F_4
S0: 4V
S3: 2.5V
S4/S5: 0V
*Check voltage on DB
[27] DOCK_RSPK+
[27] DOCK_LSPK+
R443 0_4
R444 0_4
RSPK_DK
LSPK_DK
C662 100P/50V_4
C661 100P/50V_4
[27] DOCK_MIC_R
[27] DOCK_MIC_L
R450 *0_6/S short-1a
R453 *0_6/S short-1a
DOCK_MIC_R3
DOCK_MIC_L3
07/14 (PV2) Change footprint for PE require.
C669 220P/50V_4
C665 220P/50V_4
SI modified
06/03 (PV) BOM modify for EMI solution.

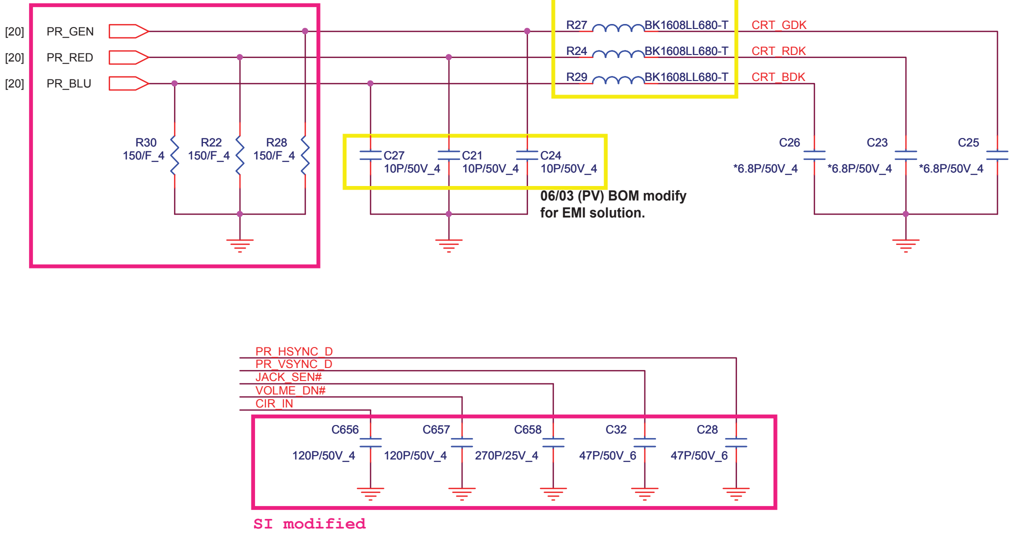
QT6 modified-0117
[20] PR_GEN
[20] PR_RED
[20] PR_BLU
R27 BK1608LL680-T
R24 BK1608LL680-T
R29 BK1608LL680-T
CRT_GDK
CRT_RDK
CRT_BDK
R30 150/F_4
R22 150/F_4
R28 150/F_4
C27 10P/50V_4
C21 10P/50V_4
C24 10P/50V_4
06/03 (PV) BOM modify for EMI solution.
C26 *6.8P/50V_4
C23 *6.8P/50V_4
C25 *6.8P/50V_4
PR_HSYNC_D
PR_VSYNC_D
JACK_SEN#
VOLME_DN#
CIR_IN
C656 120P/50V_4
C657 120P/50V_4
C658 270P/25V_4
C32 47P/50V_6
C28 47P/50V_6
SI modified

CPU FAN

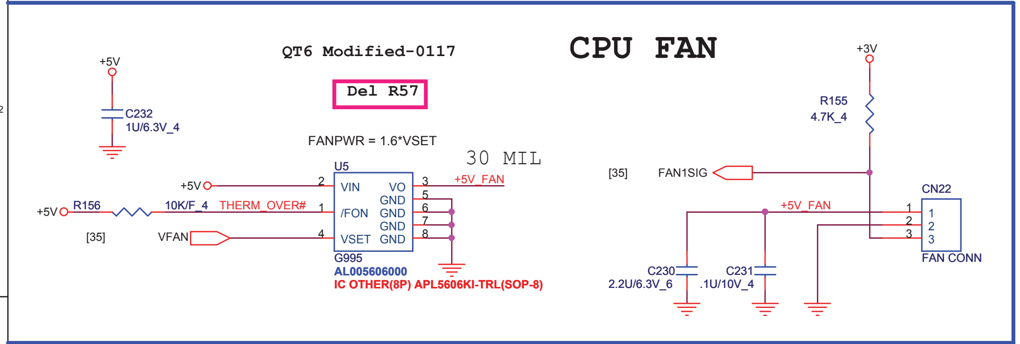
QT6 Modified-0117
Del R57
+5V
C232 1U/6.3V_4
FANPWR = 1.6*VSET
30 MIL
U5
G995
VIN VO
/FON GND
VSET GND
+5V_FAN
+5V R156 10K/F_4
THERM_OVER#
[35] VFAN
AL005606000
IC OTHER(8P) APL5606KI-TRL(SOP-8)
+3V
R155 4.7K_4
[35] FAN1SIG
+5V_FAN
CN22
FAN CONN
C230 2.2U/6.3V_6
C231 .1U/10V_4

http://hobi-elektronika.net/

2ND FAN

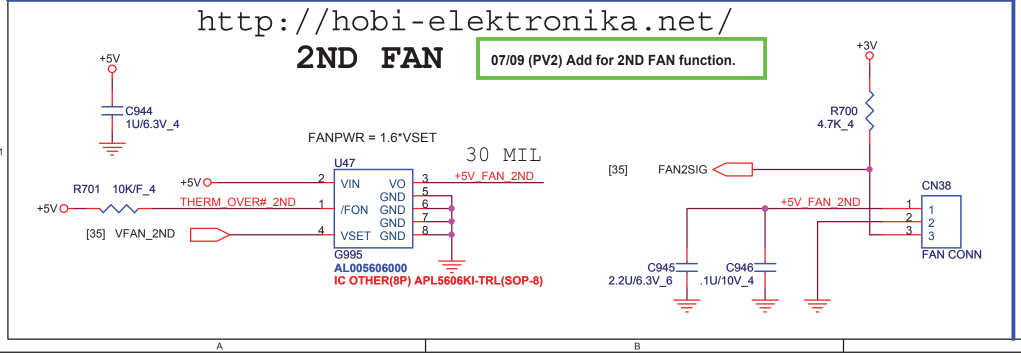
07/09 (PV2) Add for 2ND FAN function.
+5V
C944 1U/6.3V_4
FANPWR = 1.6*VSET
30 MIL
U47
G995
VIN VO
/FON GND
VSET GND
+5V_FAN_2ND
R701 10K/F_4
THERM_OVER#_2ND
[35] VFAN_2ND
AL005606000
IC OTHER(8P) APL5606KI-TRL(SOP-8)
+3V
R700 4.7K_4
[35] FAN2SIG
+5V_FAN_2ND
CN38
FAN CONN
C945 2.2U/6.3V_6
C946 .1U/10V_4

NB5

PROJECT : UT7
Quanta Computer Inc.

Size	Document Number	Rev
Custom	CABLE DOCKING/FAN	E3A

Date: Friday, July 18, 2008 Sheet 38 of 46

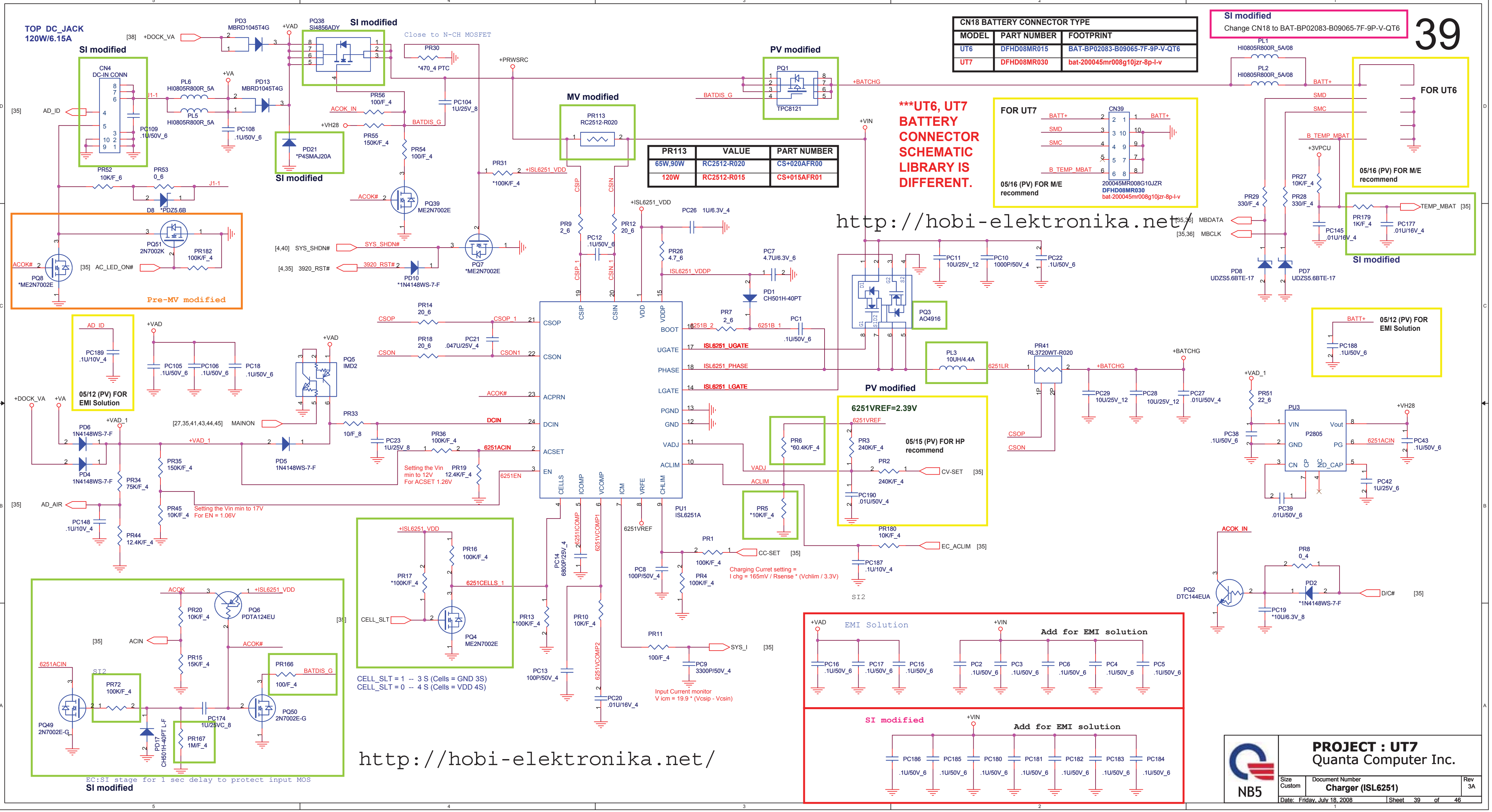
TOP DC_JACK
120W/6.15A
SI modified
CN4
DC-IN CONN
AD_ID
[35]
PL6
HI0805R800R_5A
PL5
HI0805R800R_5A
PC109
.1U/50V_6
PC108
.1U/50V_6
PD13
MBRD1045T4G
PD3
MBRD1045T4G
+DOCK_VA
[38]
+VAD
+VA
PQ38
SI4856ADY
SI modified
Close to N-CH MOSFET
PR30
*470_4 PTC
+PRWSRC
PR56
100/F_4
PC104
1U/25V_8
ACOK_IN
+VH28
BATDIS_G
PR55
150K/F_4
PR54
100/F_4
PD21
*P4SMAJ20A
SI modified
ACOK#
PQ39
ME2N7002E
PR52
10K/F_6
PR53
0_6
J1-1
D8
*PDZ5.6B
PQ51
2N7002K
PR182
100K/F_4
AC_LED_ON#
PQ8
*ME2N7002E
Pre-MV modified
MV modified
PR113
RC2512-R020
PR31
*100K/F_4
+ISL6251_VDD
SYS_SHDN#
[4,40]
3920_RST#
[4,35]
PD10
*1N4148WS-7-F
PQ7
*ME2N7002E
PR9
2_6
PR12
20_6
PC12
.1U/50V_6
CSIP
CSIN
PC26
1U/6.3V_4
PR26
4.7_6
PC7
4.7U/6.3V_6
ISL6251_VDDP
PD1
CH501H-40PT
PV modified
PQ1
TPC8121
+BATCHG
BATDIS_G
+VIN
PC11
10U/25V_12
PC10
1000P/50V_4
PC22
.1U/50V_6
PQ3
AO4916
PR7
2_6
PC1
.1U/50V_6
6251B_2
6251B_1
PR14
20_6
CSOP
CSOP_1
PR18
20_6
PC21
.047U/25V_4
CSON
CSON1
AD_ID
PC189
.1U/10V_4
05/12 (PV) FOR
EMI Solution
PC105
.1U/50V_6
PC106
.1U/50V_6
PC18
.1U/50V_6
PQ5
IMD2
ACOK#
DCIN
MAINON
[27,35,41,43,44,45]
PR33
10/F_8
PC23
1U/25V_8
PR36
100K/F_4
6251ACIN
PR19
12.4K/F_4
Setting the Vin
min to 12V
For ACSET 1.26V
6251EN
+DOCK_VA
+VA
+VAD_1
PD6
1N4148WS-7-F
PD4
1N4148WS-7-F
PD5
1N4148WS-7-F
PR35
150K/F_4
PR34
75K/F_4
PR45
10K/F_4
Setting the Vin min to 17V
For EN = 1.06V
AD_AIR
PC148
.1U/10V_4
PR44
12.4K/F_4
PU1
ISL6251A
CSOP
CSON
ACPRN
DCIN
ACSET
EN
CELLS
ICOMP
VCOMP
ICM
VRFE
CHLIM
CSIP
CSIN
VDD
VDDP
BOOT
UGATE
PHASE
LGATE
PGND
GND
VADJ
ACLIM
ISL6251_UGATE
ISL6251_PHASE
ISL6251_LGATE
PL3
10UH/4.4A
6251LR
PR41
RL3720WT-R020
+BATCHG
PC29
10U/25V_12
PC28
10U/25V_12
PC27
.01U/50V_4
PV modified
6251VREF=2.39V
6251VREF
PR6
*60.4K/F_4
PR3
240K/F_4
05/15 (PV) FOR HP
recommend
PR2
240K/F_4
CV-SET
[35]
PC190
.01U/50V_4
PR5
*10K/F_4
PR180
10K/F_4
EC_ACLIM
PC187
.1U/10V_4
PR1
100K/F_4
CC-SET
PR4
100K/F_4
PC8
100P/50V_4
Charging Curret setting =
I chg = 165mV / Rsense * (Vchlim / 3.3V)
PC14
6800P/25V_4
6251ICOMP
6251VCOMP1
PR16
100K/F_4
PR17
*100K/F_4
6251CELLS_1
CELL_SLT
PQ4
ME2N7002E
PR13
*100K/F_4
PR10
10K/F_4
PC13
100P/50V_4
6251VCOMP2
PC20
.01U/16V_4
PR11
100/F_4
SYS_I
PC9
3300P/50V_4
Input Current monitor
V icm = 19.9 * (Vcsip - Vcsin)
CELL_SLT = 1 -- 3 S (Cells = GND 3S)
CELL_SLT = 0 -- 4 S (Cells = VDD 4S)
ACOK
+ISL6251_VDD
PQ6
PDTA124EU
PR20
10K/F_4
ACIN
PR15
15K/F_4
ACOK#
6251ACIN
PR166
100/F_4
BATDIS_G
PR72
100K/F_4
PQ49
2N7002E-G
PD17
CH501H-40PT L-F
PR167
1M/F_4
PC174
1U/25VC_8
PQ50
2N7002E-G
EC:SI stage for 1 sec delay to protect input MOS
SI modified
http://hobi-elektronika.net/
***UT6, UT7
BATTERY
CONNECTOR
SCHEMATIC
LIBRARY IS
DIFFERENT.
FOR UT7
CN39
BATT+
SMD
SMC
B_TEMP_MBAT
200045MR008G10JZR
DFHD08MR030
bat-200045mr008g10jzr-8p-l-v
05/16 (PV) FOR M/E
recommend
SI modified
Change CN18 to BAT-BP02083-B09065-7F-9P-V-QT6
PL1
HI0805R800R_5A/08
PL2
HI0805R800R_5A/08
BATT+
SMD
SMC
B_TEMP_MBAT
FOR UT6
05/16 (PV) FOR M/E
recommend
+3VPCU
PR27
10K/F_4
PR28
330/F_4
PR29
330/F_4
MBDATA
MBCLK
[35,36]
PD8
UDZS5.6BTE-17
PD7
UDZS5.6BTE-17
PR179
1K/F_4
TEMP_MBAT
PC145
.01U/16V_4
PC177
.01U/16V_4
SI modified
http://hobi-elektronika.net/
BATT+
05/12 (PV) FOR
EMI Solution
PC188
.1U/50V_6
+VAD_1
PR51
22_6
PU3
P2805
VIN
Vout
GND
PG
CN
CP
ZD_CAP
PC38
.1U/50V_6
PC39
.01U/50V_6
+VH28
6251ACIN
PC43
.1U/50V_6
PC42
1U/25V_6
CSOP
CSON
VADJ
ACLIM
ACOK_IN
PR8
0_4
PQ2
DTC144EUA
PD2
*1N4148WS-7-F
D/C#
PC19
*10U/6.3V_8
EMI Solution
+VAD
PC16
.1U/50V_6
PC17
.1U/50V_6
PC15
.1U/50V_6
Add for EMI solution
PC2
.1U/50V_6
PC3
.1U/50V_6
PC6
.1U/50V_6
PC4
.1U/50V_6
PC5
.1U/50V_6
SI modified
Add for EMI solution
PC186
PC185
PC180
PC181
PC182
PC183
PC184
.1U/50V_6
SI2

CN18 BATTERY CONNECTOR TYPE

MODEL	PART NUMBER	FOOTPRINT
UT6	DFHD08MR015	BAT-BP02083-B09065-7F-9P-V-QT6
UT7	DFHD08MR030	bat-200045mr008g10jzr-8p-l-v

PR113	VALUE	PART NUMBER
65W,90W	RC2512-R020	CS+020AFR00
120W	RC2512-R015	CS+015AFR01

PROJECT : UT7
Quanta Computer Inc.
NB5

Size	Document Number	Rev
Custom	Charger (ISL6251)	3A

Date: Friday, July 18, 2008
Sheet 39 of 46

DC/DC +3V_ALW/+5V_ALW/+5V_ALW2 /+12V_ALW

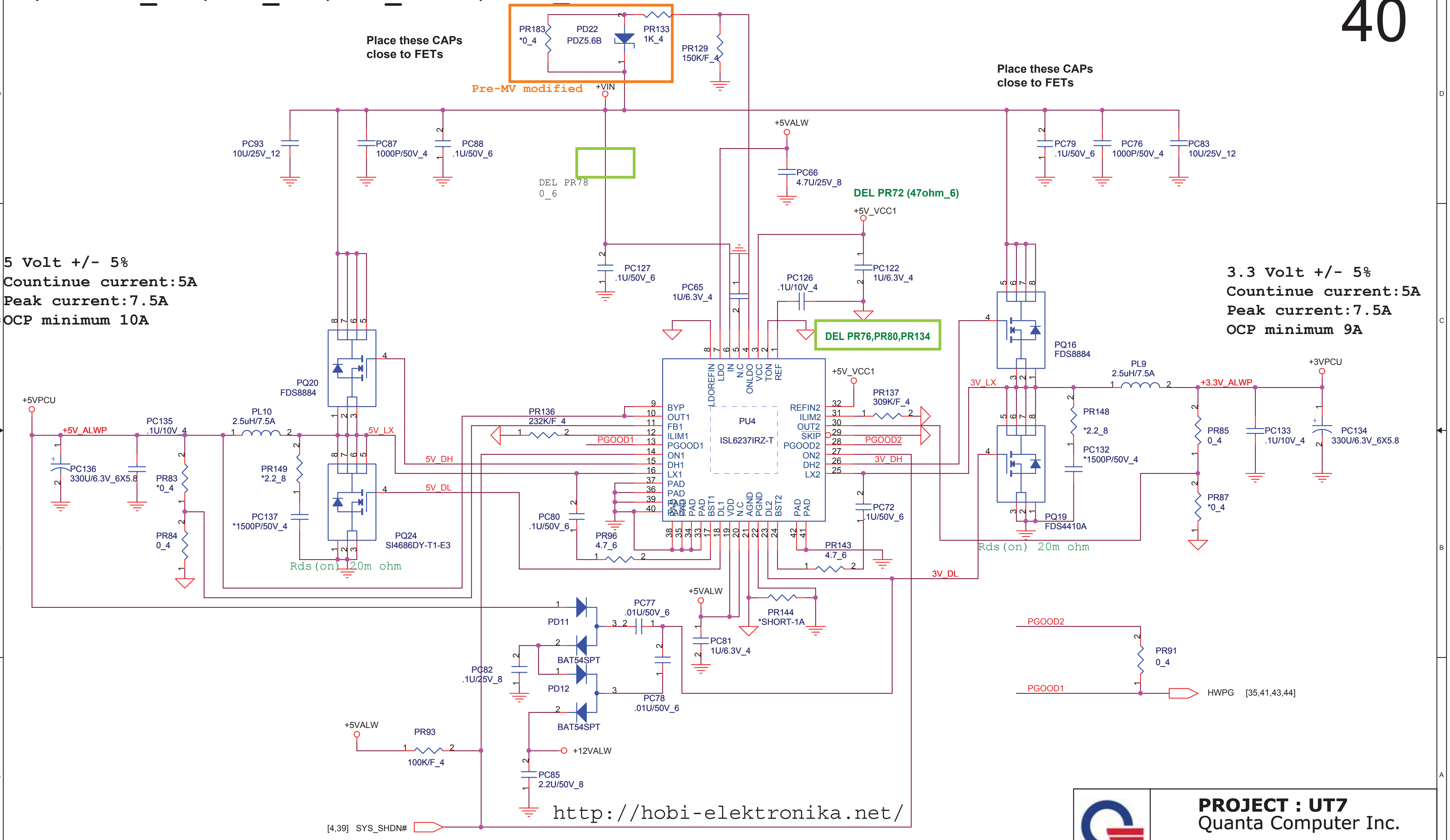
Place these CAPs
close to FETs
PR183
*0_4
PD22
PDZ5.6B
PR133
1K_4
PR129
150K/F_4
Pre-MV modified
+VIN
Place these CAPs
close to FETs
PC93
10U/25V_12
PC87
1000P/50V_4
PC88
.1U/50V_6
DEL PR78
0_6
+5VALW
PC66
4.7U/25V_8
DEL PR72 (47ohm_6)
+5V_VCC1
PC79
.1U/50V_6
PC76
1000P/50V_4
PC83
10U/25V_12
PC127
.1U/50V_6
PC65
1U/6.3V_4
PC126
.1U/10V_4
PC122
1U/6.3V_4
DEL PR76,PR80,PR134
PQ16
FDS8884
PQ20
FDS8884
+5V_VCC1
PL9
2.5uH/7.5A
+3.3V_ALWP
+3VPCU
3V_LX
+5VPCU
+5V_ALWP
PC135
.1U/10V_4
PL10
2.5uH/7.5A
5V_LX
PR136
232K/F_4
PU4
ISL6237IRZ-T
LDOREFIN
LDO
IN
N.C
ONLDO
VCC
TON
REF
BYP
OUT1
FB1
ILIM1
PGOOD1
ON1
DH1
LX1
PAD
REFIN2
ILIM2
OUT2
SKIP
PGOOD2
ON2
DH2
LX2
BST1
DL1
VDD
AGND
PGND
DL2
BST2
PR137
309K/F_4
PGOOD1
PGOOD2
3V_DH
5V_DH
5V_DL
PR148
*2.2_8
PC132
*1500P/50V_4
PR85
0_4
PC133
.1U/10V_4
PC134
330U/6.3V_6X5.8
PC136
330U/6.3V_6X5.8
PR83
*0_4
PR149
*2.2_8
PC137
*1500P/50V_4
PR84
0_4
PQ24
SI4686DY-T1-E3
Rds(on) 20m ohm
PC80
.1U/50V_6
PR96
4.7_6
PC72
.1U/50V_6
PR143
4.7_6
PQ19
FDS4410A
PR87
*0_4
Rds(on) 20m ohm
3V_DL
+5VALW
PD11
PC77
.01U/50V_6
PR144
*SHORT-1A
PC81
1U/6.3V_4
BAT54SPT
PC82
.1U/25V_8
PD12
PC78
.01U/50V_6
BAT54SPT
PGOOD2
PR91
0_4
PGOOD1
HWPG
[35,41,43,44]
+5VALW
PR93
100K/F_4
+12VALW
PC85
2.2U/50V_8
[4,39] SYS_SHDN#

5 Volt +/- 5%
Countinue current:5A
Peak current:7.5A
OCP minimum 10A

3.3 Volt +/- 5%
Countinue current:5A
Peak current:7.5A
OCP minimum 9A

http://hobi-elektronika.net/

PROJECT : UT7
Quanta Computer Inc.

NB5

Size	Document Number	Rev
B	+5V/+3V (ISL6237)	3A

Date: Friday, July 18, 2008 | Sheet 40 of 46

VCCP1.05V & +1.5V

+1.05Volt +/- 5%
Countinue current:7.5A
Peak current:10A
OCP minimum 15A

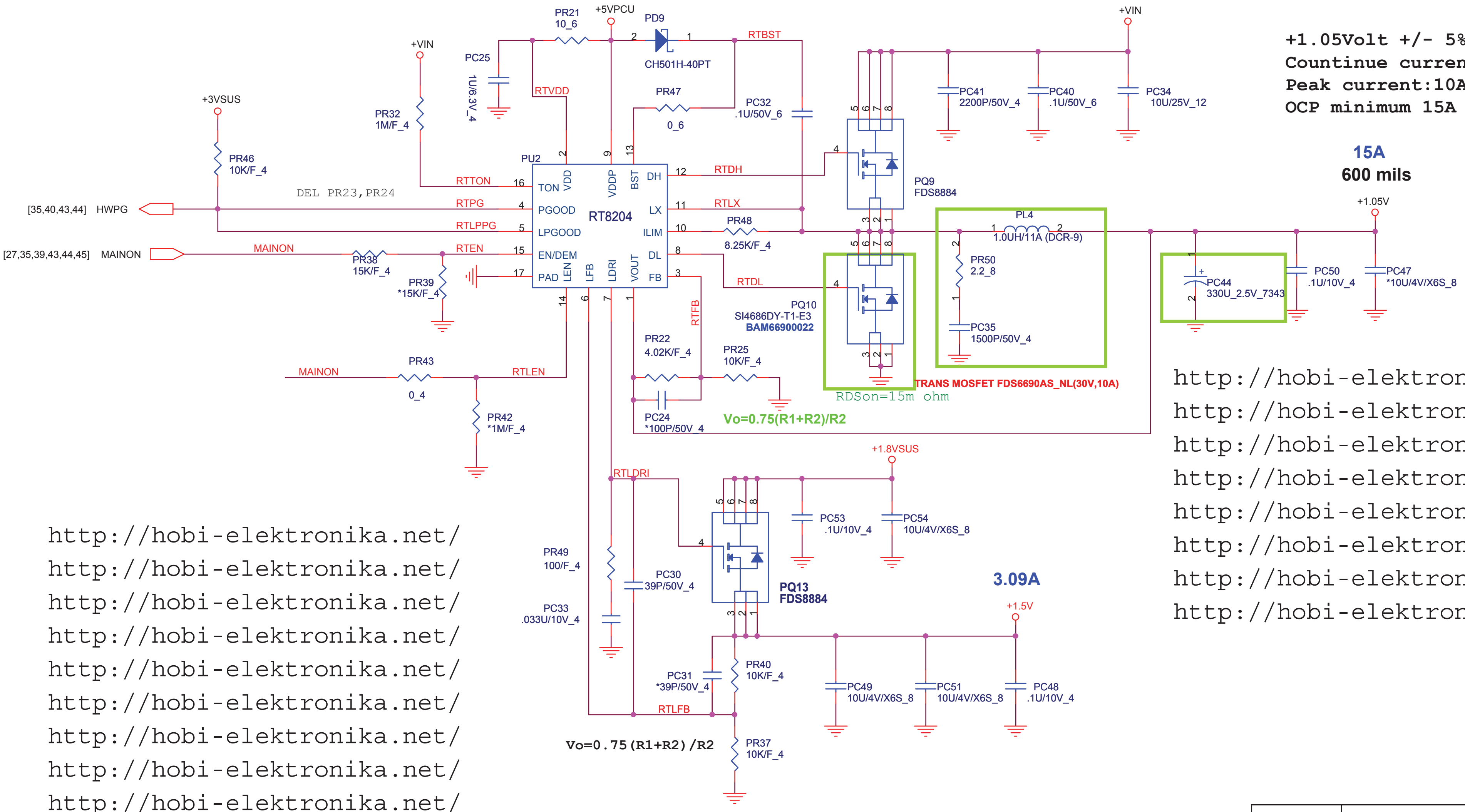
D
C
B
A
+5VPCU
PR21
10_6
PD9
CH501H-40PT
RTBST
+VIN
PC25
1U/6.3V_4
RTVDD
PR32
1M/F_4
+3VSUS
PR46
10K/F_4
PR47
0_6
PC32
.1U/50V_6
PU2
RT8204
TON
VDD
VDDP
BST
DH
PGOOD
LX
LPGOOD
ILIM
EN/DEM
DL
PAD
LEN
LFB
LDRI
VOUT
FB
RTTON
RTPG
RTLPPG
RTEN
RTDH
RTLX
RTDL
RTFB
RTLEN
RTLDRI
RTLFB
DEL PR23,PR24
[35,40,43,44] HWPG
[27,35,39,43,44,45] MAINON
MAINON
PR38
15K/F_4
PR39
*15K/F_4
PR48
8.25K/F_4
PQ9
FDS8884
PQ10
SI4686DY-T1-E3
BAM66900022
PC41
2200P/50V_4
PC40
.1U/50V_6
PC34
10U/25V_12
15A
600 mils
+1.05V
PL4
1.0UH/11A (DCR-9)
PR50
2.2_8
PC35
1500P/50V_4
PC44
330U_2.5V_7343
PC50
.1U/10V_4
PC47
*10U/4V/X6S_8
TRANS MOSFET FDS6690AS_NL(30V,10A)
RDSon=15m ohm
Vo=0.75(R1+R2)/R2
PR43
0_4
PR42
*1M/F_4
PR22
4.02K/F_4
PR25
10K/F_4
PC24
*100P/50V_4
+1.8VSUS
PC53
.1U/10V_4
PC54
10U/4V/X6S_8
PQ13
FDS8884
3.09A
+1.5V
PR49
100/F_4
PC30
39P/50V_4
PC33
.033U/10V_4
PC31
*39P/50V_4
PR40
10K/F_4
PR37
10K/F_4
PC49
10U/4V/X6S_8
PC51
10U/4V/X6S_8
PC48
.1U/10V_4
Vo=0.75(R1+R2)/R2

http://hobi-elektronika.net/
http://hobi-elektronika.net/
http://hobi-elektronika.net/
http://hobi-elektronika.net/
http://hobi-elektronika.net/
http://hobi-elektronika.net/
http://hobi-elektronika.net/
http://hobi-elektronika.net/
http://hobi-elektronika.net/
http://hobi-elektronika.net/
http://hobi-elektronika.net/
http://hobi-elektronika.net/
http://hobi-elektronika.net/
http://hobi-elektronika.net/
http://hobi-elektronika.net/
http://hobi-elektronika.net/
http://hobi-elektronika.net/
http://hobi-elektronika.net/
http://hobi-elektronika.net/
http://hobi-elektronika.net/
http://hobi-elektronika.net/

NB5

PROJECT : UT7
Quanta Computer Inc.

Size	Document Number	Rev
B	+1.05V/+1.5V (RT8204)	3A

Date: Friday, July 18, 2008 | Sheet 41 of 46

42

Merom: VCC_CORE/ 44A
Yonah: VCC_CORE/ 36A

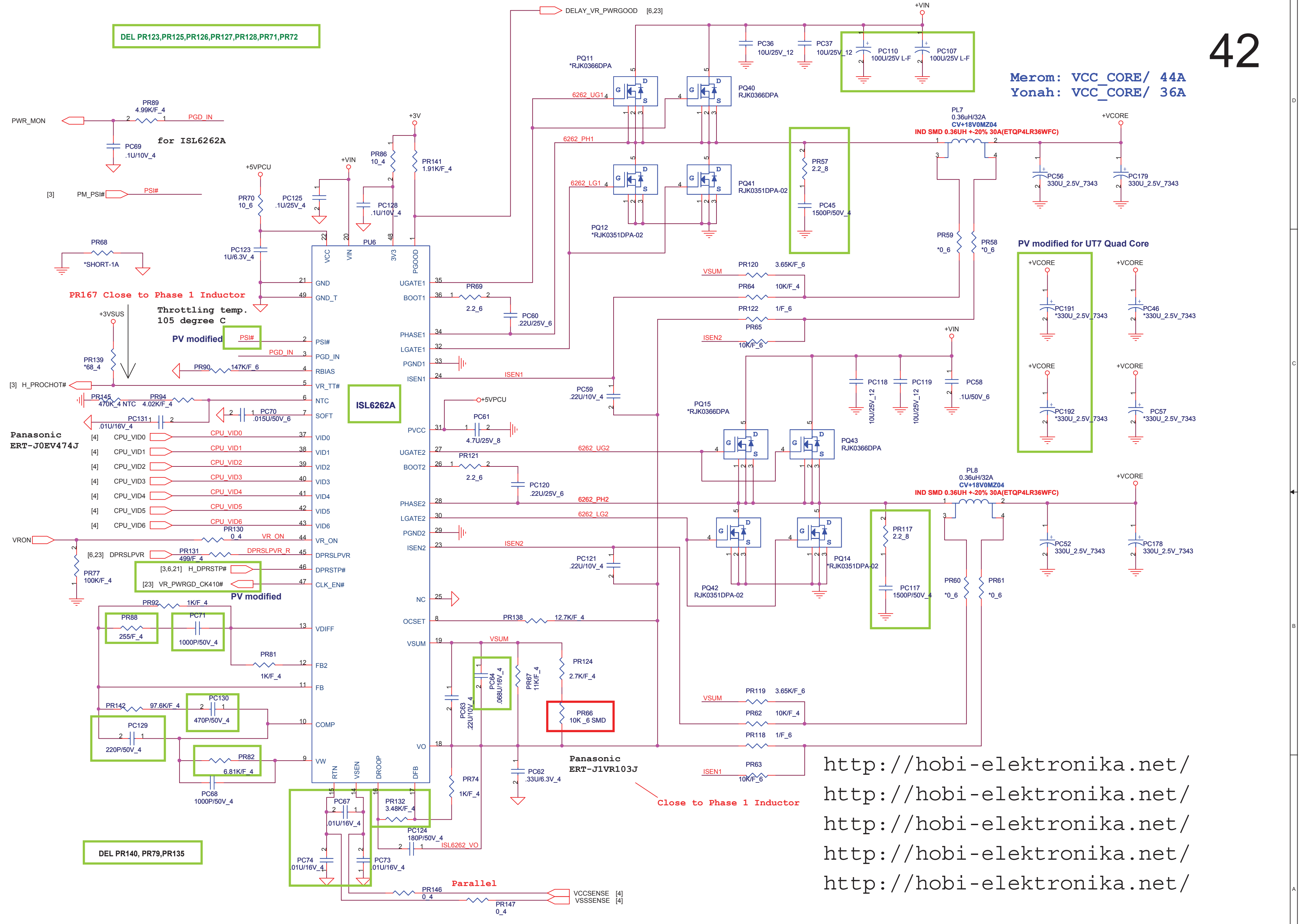
DEL PR123,PR125,PR126,PR127,PR128,PR71,PR72
PWR_MON
PR89
4.99K/F_4
PGD_IN
PC69
.1U/10V_4
for ISL6262A
[3] PM_PSI#
PSI#
PR68
*SHORT-1A
PR167 Close to Phase 1 Inductor
Throttling temp.
105 degree C
PV modified
+3VSUS
PR139
*68_4
[3] H_PROCHOT#
PR145
470K_4 NTC
PR94
4.02K/F_4
PC131
.01U/16V_4
PC70
.015U/50V_6
PR90
147K/F_6
Panasonic
ERT-J0EV474J
CPU_VID0
CPU_VID1
CPU_VID2
CPU_VID3
CPU_VID4
CPU_VID5
CPU_VID6
VRON
PR130
0_4
VR_ON
[6,23] DPRSLPVR
PR131
499/F_4
DPRSLPVR_R
PR77
100K/F_4
[3,6,21] H_DPRSTP#
[23] VR_PWRGD_CK410#
PR92
1K/F_4
PR88
255/F_4
PC71
1000P/50V_4
PR81
1K/F_4
PR142
97.6K/F_4
PC130
470P/50V_4
PC129
220P/50V_4
PR82
6.81K/F_4
PC68
1000P/50V_4
DEL PR140, PR79,PR135
PC67
.01U/16V_4
PC74
.01U/16V_4
PC73
.01U/16V_4
PR132
3.48K/F_4
PC124
180P/50V_4
ISL6262_VO
Parallel
PR146
0_4
PR147
0_4
VCCSENSE [4]
VSSSENSE [4]
PU6
ISL6262A
VCC
VIN
3V3
PGOOD
GND
GND_T
PSI#
PGD_IN
RBIAS
VR_TT#
NTC
SOFT
VID0
VID1
VID2
VID3
VID4
VID5
VID6
VR_ON
DPRSLPVR
DPRSTP#
CLK_EN#
VDIFF
FB2
FB
COMP
VW
RTN
VSEN
DROOP
DFB
UGATE1
BOOT1
PHASE1
LGATE1
PGND1
ISEN1
PVCC
UGATE2
BOOT2
PHASE2
LGATE2
PGND2
ISEN2
NC
OCSET
VSUM
VO
+5VPCU
PR70
10_6
PC125
.1U/25V_4
PC123
1U/6.3V_4
+VIN
PR86
10_4
PC128
.1U/10V_4
+3V
PR141
1.91K/F_4
DELAY_VR_PWRGOOD [6,23]
PR69
2.2_6
PC60
.22U/25V_6
PC61
4.7U/25V_8
PR121
2.2_6
PC120
.22U/25V_6
PC59
.22U/10V_4
PC121
.22U/10V_4
PR138
12.7K/F_4
PC63
.22U/10V_4
PC64
.068U/16V_4
PR67
11K/F_4
PR124
2.7K/F_4
PR66
10K _6 SMD
PR74
1K/F_4
PC62
.33U/6.3V_4
Panasonic
ERT-J1VR103J
Close to Phase 1 Inductor
PQ11
*RJK0366DPA
PQ40
RJK0366DPA
PQ12
*RJK0351DPA-02
PQ41
RJK0351DPA-02
6262_UG1
6262_PH1
6262_LG1
PC36
10U/25V_12
PC37
10U/25V_12
PC110
100U/25V L-F
PC107
100U/25V L-F
PL7
0.36uH/32A
CV+18V0MZ04
IND SMD 0.36UH +-20% 30A(ETQP4LR36WFC)
+VCORE
PC56
330U_2.5V_7343
PC179
330U_2.5V_7343
PR57
2.2_8
PC45
1500P/50V_4
PR59
*0_6
PR58
*0_6
PV modified for UT7 Quad Core
PC191
*330U_2.5V_7343
PC46
*330U_2.5V_7343
PC192
*330U_2.5V_7343
PC57
*330U_2.5V_7343
VSUM
PR120
3.65K/F_6
PR64
10K/F_4
PR122
1/F_6
PR65
10K/F_6
ISEN2
ISEN1
PC118
10U/25V_12
PC119
10U/25V_12
PC58
.1U/50V_6
PQ15
*RJK0366DPA
PQ43
RJK0366DPA
6262_UG2
6262_PH2
6262_LG2
PQ42
RJK0351DPA-02
PQ14
*RJK0351DPA-02
PL8
0.36uH/32A
CV+18V0MZ04
IND SMD 0.36UH +-20% 30A(ETQP4LR36WFC)
PR117
2.2_8
PC117
1500P/50V_4
PC52
330U_2.5V_7343
PC178
330U_2.5V_7343
PR60
*0_6
PR61
*0_6
PR119
3.65K/F_6
PR62
10K/F_4
PR118
1/F_6
PR63
10K/F_6

http://hobi-elektronika.net/
http://hobi-elektronika.net/
http://hobi-elektronika.net/
http://hobi-elektronika.net/
http://hobi-elektronika.net/

NB5
PROJECT : UT7
Quanta Computer Inc.

Size	Document Number	Rev
Custom	CPU Core (ISL6266A)	3A

Date: Friday, July 18, 2008 Sheet 42 of 46

VGA Core & VCC1.1

+VGACORE +/- 3%
Countinue current:17.54A
Peak current:22.8A
OCP minimum 23A

800 mils
22.5A

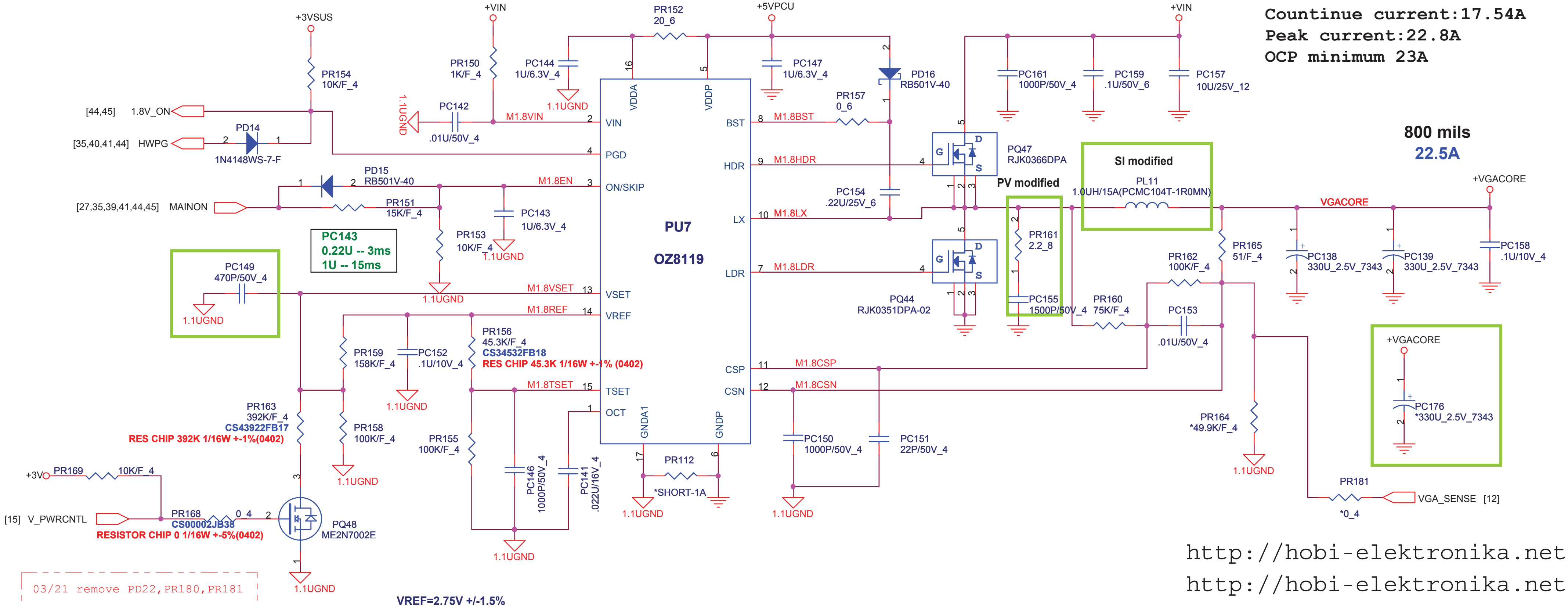
+3VSUS
PR154
10K/F_4
[44,45] 1.8V_ON
[35,40,41,44] HWPG
PD14
1N4148WS-7-F
+VIN
PR150
1K/F_4
PC142
.01U/50V_4
1.1UGND
PC144
1U/6.3V_4
M1.8VIN
PR152
20_6
+5VPCU
PC147
1U/6.3V_4
PR157
0_6
PD16
RB501V-40
M1.8BST
M1.8HDR
PC154
.22U/25V_6
M1.8LX
M1.8LDR
PD15
RB501V-40
M1.8EN
[27,35,39,41,44,45] MAINON
PR151
15K/F_4
PC143
1U/6.3V_4
PR153
10K/F_4
PC143
0.22U -- 3ms
1U -- 15ms
PC149
470P/50V_4
M1.8VSET
M1.8REF
PR159
158K/F_4
PC152
.1U/10V_4
PR156
45.3K/F_4
CS34532FB18
RES CHIP 45.3K 1/16W +-1% (0402)
M1.8TSET
PR158
100K/F_4
PR155
100K/F_4
PC146
1000P/50V_4
PC141
.022U/16V_4
PR163
392K/F_4
CS43922FB17
RES CHIP 392K 1/16W +-1%(0402)
+3V PR169 10K/F_4
[15] V_PWRCNTL
PR168 0_4
CS00002JB38
RESISTOR CHIP 0 1/16W +-5%(0402)
PQ48
ME2N7002E
VDDA
VDDP
VIN
PGD
ON/SKIP
VSET
VREF
TSET
OCT
BST
HDR
LX
LDR
CSP
CSN
GNDA1
GNDP
PU7
OZ8119
PR112
*SHORT-1A
M1.8CSP
M1.8CSN
PC150
1000P/50V_4
PC151
22P/50V_4
PQ47
RJK0366DPA
PQ44
RJK0351DPA-02
PV modified
PR161
2.2_8
PC155
1500P/50V_4
PC161
1000P/50V_4
PC159
.1U/50V_6
PC157
10U/25V_12
SI modified
PL11
1.0UH/15A(PCMC104T-1R0MN)
VGACORE
+VGACORE
PR165
51/F_4
PR162
100K/F_4
PR160
75K/F_4
PC153
.01U/50V_4
PC138
330U_2.5V_7343
PC139
330U_2.5V_7343
PC158
.1U/10V_4
PR164
*49.9K/F_4
PC176
*330U_2.5V_7343
PR181
*0_4
VGA_SENSE [12]

03/21 remove PD22,PR180,PR181

VREF=2.75V +/-1.5%

NB9P-GS: PR163=392Kohm
Output = 0.9V

NB9M-GE: PR203=590Kohm
NB9P-GS: PR203=768Kohm

CS45902FB10 RES CHIP 590K 1/16W +-1%(0402)
CS47682FB10 RES CHIP 768K 1/16W +-1%(0402)

V_PWRCNTL GPIO5	NB9P-GS
Low	1.05V
High	0.9V

VGA_GPIO6 GPIO6	V_PWRCNTL GPIO5		NB9P-GS	NB9M-GE
Low	Low	MAX BAT	0.9V	0.9V
Low	High	SD DVD	0.9V	0.9V
High	Low	HD DVD	0.9V	0.9V
High	High	MAX PERF	1.05V	1.09V

http://hobi-elektronika.net/
http://hobi-elektronika.net/
http://hobi-elektronika.net/
http://hobi-elektronika.net/
http://hobi-elektronika.net/
http://hobi-elektronika.net/

NB5

PROJECT : UT7
Quanta Computer Inc.

Size	Document Number	Rev
B	VGA CORE OZ8118	3A

Date: Friday, July 18, 2008 | Sheet 43 of 46

1.8 Volt +/- 5%
Countinue current:6A
Peak current:14A
OCP minimum 17A

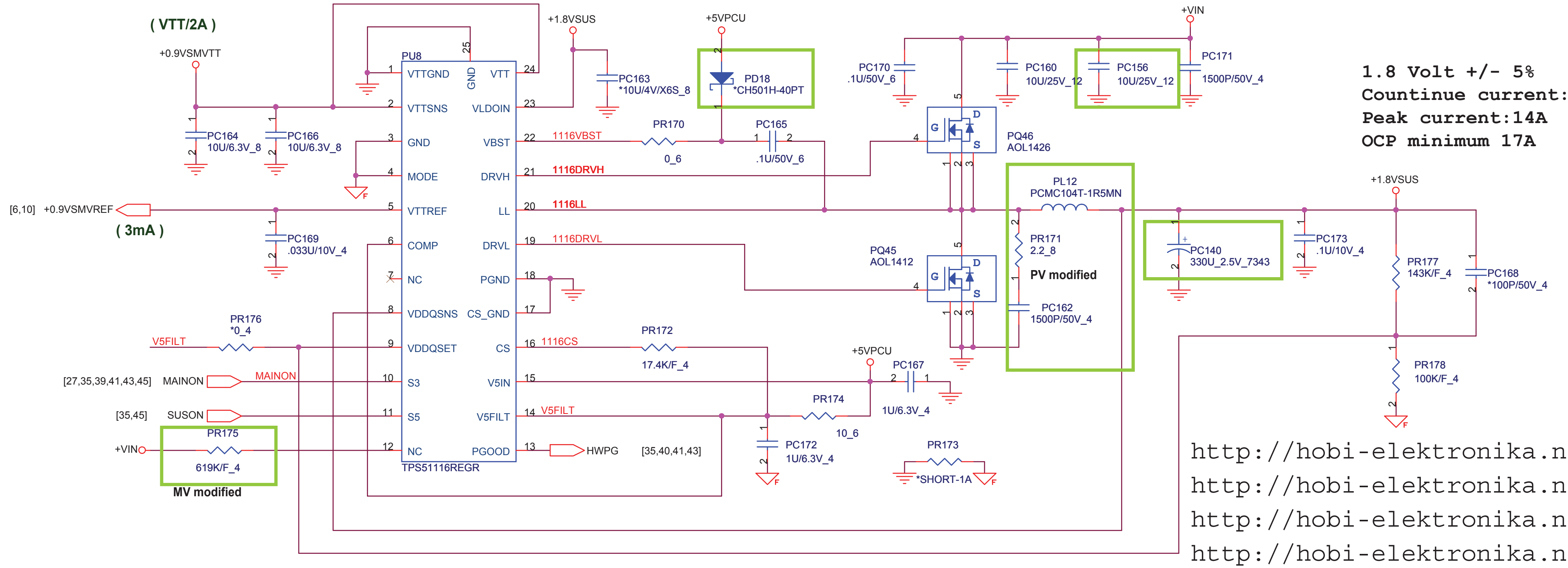
(VTT/2A)
+0.9VSMVTT
PC164
10U/6.3V_8
PC166
10U/6.3V_8
PU8
VTTGND
VTTSNS
GND
MODE
VTTREF
COMP
NC
VDDQSNS
VDDQSET
S3
S5
NC
VTT
VLDOIN
VBST
DRVH
LL
DRVL
PGND
CS_GND
CS
V5IN
V5FILT
PGOOD
GND
TPS51116REGR
+1.8VSUS
PC163
*10U/4V/X6S_8
+5VPCU
PD18
*CH501H-40PT
1116VBST
PR170
0_6
PC165
.1U/50V_6
1116DRVH
1116LL
1116DRVL
1116CS
PR172
17.4K/F_4
[6,10]
+0.9VSMVREF
(3mA)
PC169
.033U/10V_4
PR176
*0_4
V5FILT
[27,35,39,41,43,45]
MAINON
MAINON
[35,45]
SUSON
PR175
619K/F_4
+VIN
MV modified
+5VPCU
PC167
1U/6.3V_4
PR174
10_6
PC172
1U/6.3V_4
V5FILT
HWPG
[35,40,41,43]
PR173
*SHORT-1A
+VIN
PC170
.1U/50V_6
PC160
10U/25V_12
PC156
10U/25V_12
PC171
1500P/50V_4
PQ46
AOL1426
PQ45
AOL1412
PL12
PCMC104T-1R5MN
PR171
2.2_8
PV modified
PC162
1500P/50V_4
PC140
330U_2.5V_7343
PC173
.1U/10V_4
+1.8VSUS
PR177
143K/F_4
PC168
*100P/50V_4
PR178
100K/F_4

1.1 Volt +/- 5%
Countinue current:2.62A
Peak current:3A

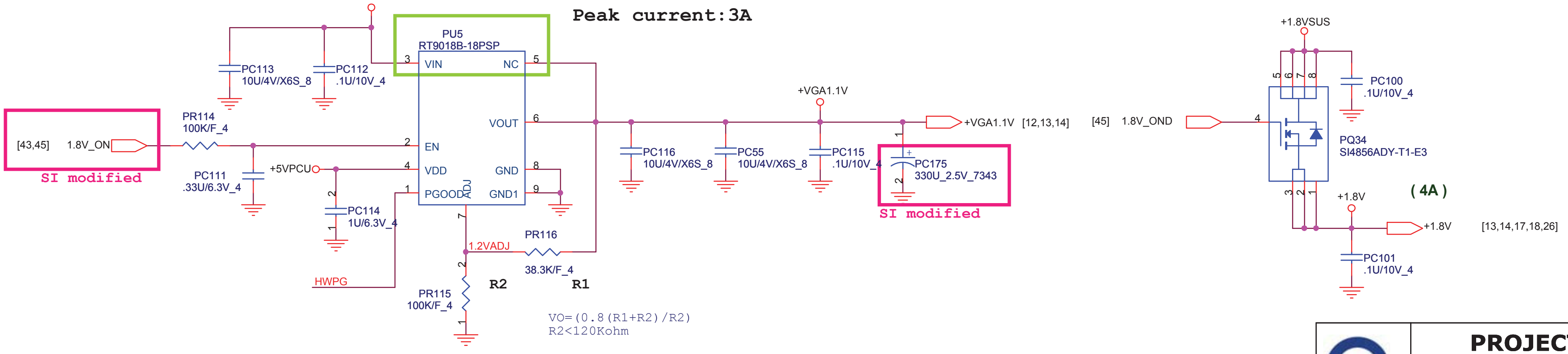
+1.8VSUS
PC113
10U/4V/X6S_8
PC112
.1U/10V_4
PU5
RT9018B-18PSP
VIN
NC
VOUT
EN
VDD
GND
PGOOD
ADJ
GND1
[43,45]
1.8V_ON
SI modified
PR114
100K/F_4
PC111
.33U/6.3V_4
+5VPCU
PC114
1U/6.3V_4
1.2VADJ
PR116
38.3K/F_4
R2
R1
HWPG
PR115
100K/F_4
VO=(0.8(R1+R2)/R2)
R2<120Kohm
PC116
10U/4V/X6S_8
PC55
10U/4V/X6S_8
PC115
.1U/10V_4
+VGA1.1V
+VGA1.1V
[12,13,14]
PC175
330U_2.5V_7343
SI modified
[45]
1.8V_OND
PQ34
SI4856ADY-T1-E3
+1.8VSUS
PC100
.1U/10V_4
(4A)
+1.8V
+1.8V
[13,14,17,18,26]
PC101
.1U/10V_4

http://hobi-elektronika.net/
http://hobi-elektronika.net/
http://hobi-elektronika.net/
http://hobi-elektronika.net/
http://hobi-elektronika.net/
http://hobi-elektronika.net/

NB5

PROJECT : UT7
Quanta Computer Inc.

Size
B
Document Number
1.8V/DDR_VTER/+1.8v/+1.1V
Rev
3A
Date: Friday, July 18, 2008
Sheet 44 of 46

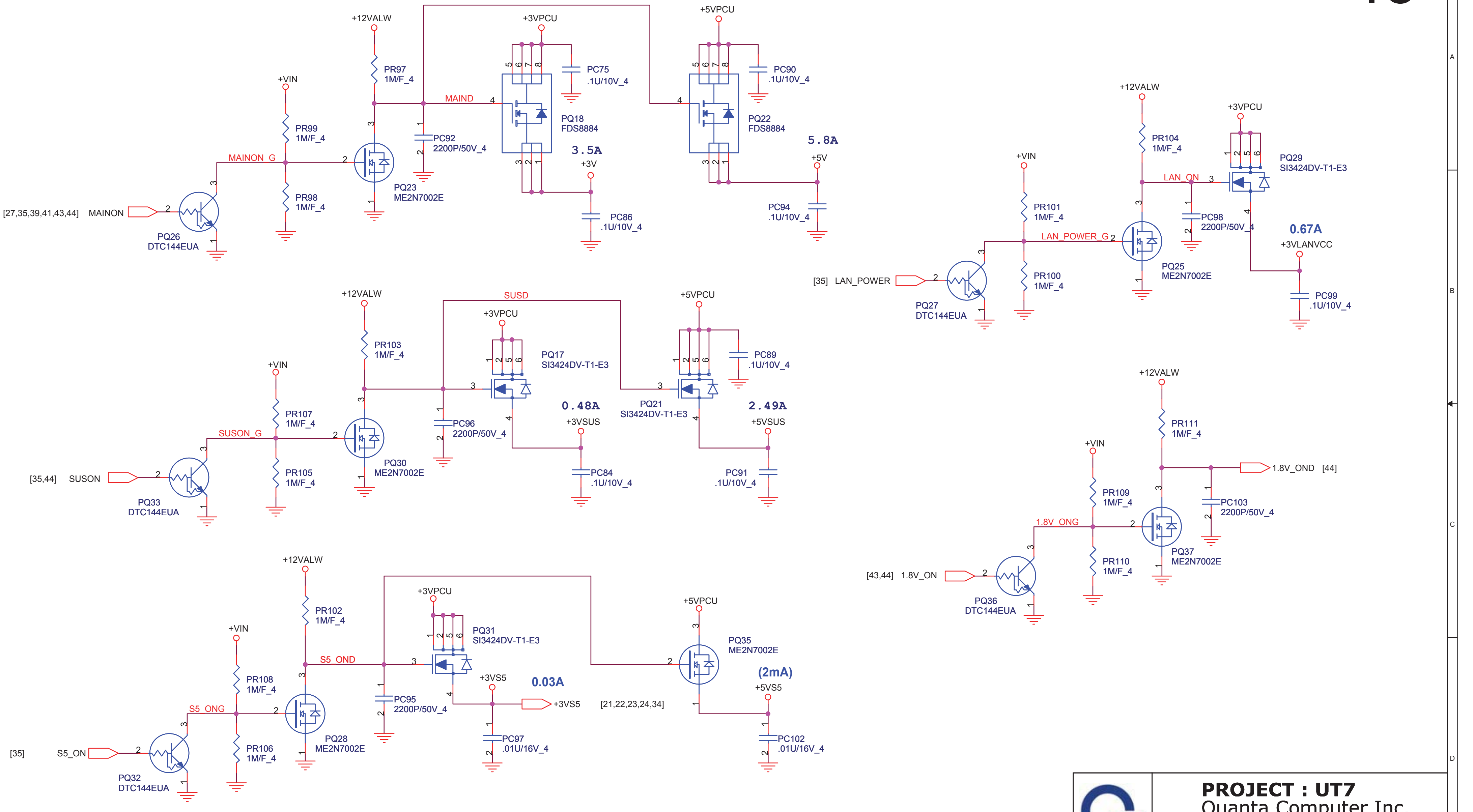
+12VALW
PR97
1M/F_4
+3VPCU
+5VPCU
PC75
.1U/10V_4
PC90
.1U/10V_4
+VIN
MAIND
PR99
1M/F_4
PC92
2200P/50V_4
PQ18
FDS8884
PQ22
FDS8884
3.5A
5.8A
+3V
+5V
MAINON_G
PQ23
ME2N7002E
PR98
1M/F_4
PC86
.1U/10V_4
PC94
.1U/10V_4
[27,35,39,41,43,44]
MAINON
PQ26
DTC144EUA
+12VALW
PR104
1M/F_4
+3VPCU
PQ29
SI3424DV-T1-E3
+VIN
LAN_ON
PR101
1M/F_4
PC98
2200P/50V_4
0.67A
+3VLANVCC
LAN_POWER_G
PQ25
ME2N7002E
[35]
LAN_POWER
PR100
1M/F_4
PQ27
DTC144EUA
PC99
.1U/10V_4
+12VALW
SUSD
+5VPCU
+3VPCU
PR103
1M/F_4
PQ17
SI3424DV-T1-E3
PC89
.1U/10V_4
+VIN
PQ21
SI3424DV-T1-E3
0.48A
2.49A
PR107
1M/F_4
PC96
2200P/50V_4
+3VSUS
+5VSUS
SUSON_G
PQ30
ME2N7002E
PR105
1M/F_4
PC84
.1U/10V_4
PC91
.1U/10V_4
[35,44]
SUSON
PQ33
DTC144EUA
+12VALW
PR111
1M/F_4
+VIN
1.8V_OND
[44]
PR109
1M/F_4
PC103
2200P/50V_4
1.8V_ONG
PQ37
ME2N7002E
PR110
1M/F_4
[43,44]
1.8V_ON
PQ36
DTC144EUA
+12VALW
+3VPCU
+5VPCU
PR102
1M/F_4
PQ31
SI3424DV-T1-E3
+VIN
PQ35
ME2N7002E
S5_OND
+3VS5
0.03A
(2mA)
PR108
1M/F_4
+5VS5
PC95
2200P/50V_4
+3VS5
[21,22,23,24,34]
S5_ONG
PQ28
ME2N7002E
PC97
.01U/16V_4
PC102
.01U/16V_4
[35]
S5_ON
PR106
1M/F_4
PQ32
DTC144EUA

NB5

PROJECT : UT7
Quanta Computer Inc.

Size	Document Number	Rev
B	DISCHARGE/3VS5/5VS5/LAN	3A

Date: Friday, July 18, 2008 | Sheet 45 of 46

		AC MODE				DC MODE			
	Voltage level	S0	S3	S4	S5	S0	S3	S4	S5
+3VPCU	3.3V +/- 5%	V	V	V	V	V	V	V	V
+5VPCU	5V +/- 5%	V	V	V	V	V	V	V	V
+3VRTC	3.3V +/- 5%	V	V	V	V	V	V	V	V
+3VS5	3.3V +/- 5%	V	V	V	V	V	V		
+5VS5	5V +/- 5%	V	V	V	V	V	V		
+3VSUS	3.3V +/- 5%	V	V			V	V		
+5VSUS	5V +/- 5%	V	V			V	V		
+1.8VSUS	1.8V +/- 5%	V	V			V	V		
+0.9VSMVTT	0.9V +/- 5%	V	V			V	V		
+1.5V	1.5V +/- 5%	V				V			
+1.05V	1.05V +/- 5%	V				V			
+VCORE	0.9~1.15V	V				V			
+VGA_CORE	0.9~1.2V	V				V			
+VGA1.1V	1.1V +/- 5%	V				V			
+1.8V	1.8V +/- 5%	V				V			
+3VLANVCC	3.3V +/- 5%	V				V			

NB5

PROJECT : UT7
Quanta Computer Inc.

Size	Document Number	Rev
Custom	**Voltage**	E3A

Date: Friday, July 18, 2008 Sheet 46 of 46